AUTHENTICATED
U.S. GOVERNMENT
INFORMATION
GPO

Federal Register

6–28–06 Wednesday
Vol. 71 No. 124 June 28, 2006

Pages 36661–36978

The **FEDERAL REGISTER** (ISSN 0097–6326) is published daily, Monday through Friday, except official holidays, by the Office of the Federal Register, National Archives and Records Administration, Washington, DC 20408, under the Federal Register Act (44 U.S.C. Ch. 15) and the regulations of the Administrative Committee of the Federal Register (1 CFR Ch. I). The Superintendent of Documents, U.S. Government Printing Office, Washington, DC 20402 is the exclusive distributor of the official edition. Periodicals postage is paid at Washington, DC.

The **FEDERAL REGISTER** provides a uniform system for making available to the public regulations and legal notices issued by Federal agencies. These include Presidential proclamations and Executive Orders, Federal agency documents having general applicability and legal effect, documents required to be published by act of Congress, and other Federal agency documents of public interest.

Documents are on file for public inspection in the Office of the Federal Register the day before they are published, unless the issuing agency requests earlier filing. For a list of documents currently on file for public inspection, see *www.archives.gov.*

The seal of the National Archives and Records Administration authenticates the Federal Register as the official serial publication established under the Federal Register Act. Under 44 U.S.C. 1507, the contents of the **Federal Register** shall be judicially noticed.

The **Federal Register** is published in paper and on 24x microfiche. It is also available online at no charge as one of the databases on GPO Access, a service of the U.S. Government Printing Office.

The online edition of the **Federal Register** *www.gpoaccess.gov/nara,* available through GPO Access, is issued under the authority of the Administrative Committee of the Federal Register as the official legal equivalent of the paper and microfiche editions (44 U.S.C. 4101 and 1 CFR 5.10). It is updated by 6 a.m. each day the **Federal Register** is published and includes both text and graphics from Volume 59, Number 1 (January 2, 1994) forward.

For more information about GPO Access, contact the GPO Access User Support Team, call toll free 1-888-293-6498; DC area 202-512-1530; fax at 202-512-1262; or via e-mail at *gpoaccess@gpo.gov.* The Support Team is available between 7:00 a.m. and 9:00 p.m. Eastern Time, Monday–Friday, except official holidays.

The annual subscription price for the **Federal Register** paper edition is $749 plus postage, or $808, plus postage, for a combined **Federal Register, Federal Register** Index and List of CFR Sections Affected (LSA) subscription; the microfiche edition of the **Federal Register** including the **Federal Register** Index and LSA is $165, plus postage. Six month subscriptions are available for one-half the annual rate. The prevailing postal rates will be applied to orders according to the delivery method requested. The price of a single copy of the daily **Federal Register,** including postage, is based on the number of pages: $11 for an issue containing less than 200 pages; $22 for an issue containing 200 to 400 pages; and $33 for an issue containing more than 400 pages. Single issues of the microfiche edition may be purchased for $3 per copy, including postage. Remit check or money order, made payable to the Superintendent of Documents, or charge to your GPO Deposit Account, VISA, MasterCard, American Express, or Discover. Mail to: New Orders, Superintendent of Documents, P.O. Box 371954, Pittsburgh, PA 15250-7954; or call toll free 1-866-512-1800, DC area 202-512-1800; or go to the U.S. Government Online Bookstore site, see *bookstore.gpo.gov.*

There are no restrictions on the republication of material appearing in the **Federal Register.**

How To Cite This Publication: Use the volume number and the page number. Example: 71 FR 12345.

Postmaster: Send address changes to the Superintendent of Documents, Federal Register, U.S. Government Printing Office, Washington DC 20402, along with the entire mailing label from the last issue received.

SUBSCRIPTIONS AND COPIES

PUBLIC

Subscriptions:

Paper or fiche	**202–512–1800**
Assistance with public subscriptions	**202–512–1806**

General online information **202–512–1530; 1–888–293–6498**

Single copies/back copies:

Paper or fiche	**202–512–1800**
Assistance with public single copies	**1–866–512–1800 (Toll-Free)**

FEDERAL AGENCIES

Subscriptions:

Paper or fiche	**202–741–6005**
Assistance with Federal agency subscriptions	**202–741–6005**

Printed on recycled paper.

Contents

Federal Register

Vol. 71, No. 124

Wednesday, June 28, 2006

Agricultural Marketing Service
PROPOSED RULES
Milk marketing orders:
Northeast et al., 36715
NOTICES
Grade standards:
Cultivated ginseng, 36753

Agriculture Department
See Agricultural Marketing Service
See Rural Housing Service

Antitrust Division
NOTICES
National cooperative research notifications:
Appliance Research Consortium, Inc., 36829
Interactive Advertising Bureau, 36829–36830
Southwest Research Institute: Cooperative Research Group on High Efficiency Durable Gasoline Engine, 36830

Census Bureau
NOTICES
Agency information collection activities; proposals, submissions, and approvals, 36756–36757

Centers for Disease Control and Prevention
NOTICES
Reports and guidance documents; availability, etc.:
Inhalation anthrax treatment; intravenous infusion for delivery of therapeutic molecules, 36811–36812
Sanitation inspections of cruise ships; fees, 36812–36813

Civil Rights Commission
NOTICES
Meetings; Sunshine Act, 36754

Commerce Department
See Census Bureau
See National Oceanic and Atmospheric Administration
NOTICES
Agency information collection activities; proposals, submissions, and approvals, 36754–36756

Committee for the Implementation of Textile Agreements
NOTICES
Textile and apparel categories:
Dominican Republic-Central America Free Trade Agreement; commercial availability—
100% cotton flannel fabric; correction, 36885

Defense Department
RULES
Federal Acquisition Regulation (FAR):
Assets buy-back, 36939–36941
Central contractor registration; taxpayer identification number validation, 36923–36925
Free trade agreements—
El Salvador, Honduras, and Nicaragua, 36935–36938
Introduction, 36922–36923
Noncommercial modifications of commercial items; submission of cost or pricing data, 36927–36930
Procurement center representatives; procedures, 36925–36927
Small Entity Compliance Guide, 36941–36943
Technical amendments, 36941
Wage Determinations OnLine; implementation, 36930–36935
NOTICES
Agency information collection activities; proposals, submissions, and approvals, 36757–36758

Education Department
NOTICES
Meetings:
Safe and Drug-Free Schools and Communities Advisory Committee, 36758
Postsecondary education:
William D. Ford Direct Loan Program—
Income Contingent Repayment plan; annual updates, 36758–36763

Election Assistance Commission
NOTICES
Meetings; Sunshine Act, 36764

Energy Department
See Energy Efficiency and Renewable Energy Office
See Federal Energy Regulatory Commission
RULES
Worker Safety and Health Program; chronic beryllium disease prevention
Correction, 36661
NOTICES
Meetings:
Environmental Management Site-Specific Advisory Board—
Hanford Site, WA, 36764–36765
Paducah Gaseous Diffusion Plant, KY, 36764

Energy Efficiency and Renewable Energy Office
PROPOSED RULES
Energy conservation:
Commercial and industrial equipment, energy efficiency program—
Refrigerated bottled or canned beverage vending machines; meeting and framework document availability, 36715–36717

Environmental Protection Agency
RULES
Air programs; State authority delegations:
Arizona, California, and Nevada, 36678–36687
Pesticides; emergency exemptions, etc.:
Myclobutanil, 36687–36690
PROPOSED RULES
Air pollution; standards of performance for new stationary sources:
Solid waste incineration units, 36726–36730
Air programs; State authority delegations:
Arizona, California, and Nevada, 36730–36731
Pesticides; tolerances in food, animal feeds, and raw agricultural commodities:
Phosphorous acid, 36731–36736

Superfund program:
National oil and hazardous substances contingency plan priorities list, 36736–36741
NOTICES
Committees; establishment, renewal, termination, etc.:
Environmental Policy and Technology National Advisory Council, 36771
Pesticide, food, and feed additive petitions:
E.I. DuPont de Nemours & Company, Inc.; correction, 36792
Pesticide programs:
Tolerance reassessment decisions—
Ethephon, 36771–36773
Pesticide registration, cancellation, etc.:
Bonide Products, Inc., et al., 36773–36784
Formetanate hydrochloride, 36784–36786
Naptalam sodium, 36786–36787
Permethrin, 36788–36789
Phytophthora palmivora and methyl salicylate, 36789–36792

Executive Office for Immigration Review
NOTICES
Agency information collection activities; proposals, submissions, and approvals, 36830–36831

Executive Office of the President
See Presidential Documents

Export-Import Bank
NOTICES
Japan; electron beam furnace, finance application, 36792

Federal Aviation Administration
RULES
Airworthiness directives:
Boeing, 36671–36674
Goodrich; correction, 36674
Standard instrument approach procedures, 36674–36676
PROPOSED RULES
Airworthiness directives:
Empresa Brasileira de Aeronautica S.A. (EMBRAER), 36723–36724
Class E airspace, 36724–36726
NOTICES
Agency information collection activities; proposals, submissions, and approvals, 36868–36870
Environmental statements; availability, etc.:
Blue Origin West Texas Commercial Launch Site, 36870
Environmental statements; record of decision:
W.K. Kellogg Airport, MI, 36871
Meetings:
RTCA, Inc., 36871
Passenger facility charges; applications, etc.:
Philadelphia, PA, et al., 36871–36873
Reports and guidance documents; availability, etc.:
Direction finders; U.S. availability change; comment request, 36873–36874
National Parks Air Tour Management Act; opinion on transferability of interim operating authority, 36874–36875

Federal Communications Commission
RULES
Common carrier services:
Individuals with hearing and speech disabilities; telecommunications relay and speech-to-speech services, 36690–36693
Radio stations; table of assignments:
New Mexico, 36693
Texas, 36693
PROPOSED RULES
Radio stations; table of assignments:
Kentucky and Virginia, 36741–36742
Missouri, 36741
NOTICES
Agency information collection activities; proposals, submissions, and approvals, 36793–36794
Common carrier services:
Interstate Telecommunications Relay Service Fund; video relay service provider eligibility certification, 36795–36796
Telecommunication relay services—
Consumer complaint log summaries; due date reminder, 36796–36797
Meetings:
Consumer Advisory Committee, 36797–36798
Rulemaking proceedings; petitions filed, granted, denied, etc., 36798
Applications, hearings, determinations, etc.:
GoAmerica, Inc., 36794–36795

Federal Deposit Insurance Corporation
PROPOSED RULES
Assessments:
Dividend requirements; implementation, 36717
One-time assessment credit; implementation, 36717–36718
Quarterly assessment collection and three-year retention period, 36718–36719

Federal Energy Regulatory Commission
NOTICES
Environmental statements; availability, etc.:
Freeport LNG Development, L.P., 36769–36770
Meetings:
City of Seattle, Washington
Correction, 36770
El Paso Natural Gas Co.; settlement conference, 36770
New York Independent System Operator, Inc., 36770
Off-the-record communications, 36770–36771
Applications, hearings, determinations, etc.:
Air Liquide Large Industries, U.S. LP et al., 36765
CenterPoint Energy Gas Transmission Co., 36765
Cogen Technologies Liden Venture, L.P. , et al., 36766
Dominion Transmission, Inc., 36766
El Paso Natural Gas Co., 36767
Freebird Gas Storage, L.L.C., 36767
Hampton Lumber Mills-Washington, Inc., 36767–36768
ISO New England Inc., 36768
Rumford Paper Co., 36768
Transcontinental Gas Pipe Line Corp., 36768–36769

Federal Maritime Commission
NOTICES
Agreements filed, etc., 36798
Ocean transportation intermediary licenses:
Akamai Freight Services, LLC, et al., 36798–36799
CCT Global Logistics; correction, 36799
Global Parcel System LLC et al., 36799
Lorimer Cargo Express, Inc., et al., 36799–36800

Federal Railroad Administration
RULES
Railroad safety:
Locomotive crashworthiness, 36888–36917

Federal Reserve System
NOTICES
Reports and guidance documents; availability, etc.:
Payments system risk; policy statement, 36800–36811

Fish and Wildlife Service
PROPOSED RULES
Endangered and threatened species:
Findings on petitions—
Morelet's crocodile, 36743–36745
Flat-tailed horned lizard; withdrawn, 36745–36752
Endangered Species Convention:
Regulations revised, 36742–36743

Food and Drug Administration
NOTICES
Meetings:
Blood Products Advisory Committee, 36813
Reports and guidance documents; availability, etc.:
Analytical Methods Description for Type C Medicated Feeds, 36813–36814

General Services Administration
RULES
Federal Acquisition Regulation (FAR):
Assets buy-back, 36939–36941
Central contractor registration; taxpayer identification number validation, 36923–36925
Free trade agreements—
El Salvador, Honduras, and Nicaragua, 36935–36938
Introduction, 36922–36923
Noncommercial modifications of commercial items; submission of cost or pricing data, 36927–36930
Procurement center representatives; procedures, 36925–36927
Small Entity Compliance Guide, 36941–36943
Technical amendments, 36941
Wage Determinations OnLine; implementation, 36930–36935

Health and Human Services Department
See Centers for Disease Control and Prevention
See Food and Drug Administration
See National Institutes of Health
See Substance Abuse and Mental Health Services Administration

Homeland Security Department
See U.S. Citizenship and Immigration Services
NOTICES
Meetings:
National Infrastructure Advisory Committee, 36821–36822

Housing and Urban Development Department
NOTICES
Agency information collection activities; proposals, submissions, and approvals, 36822–36823
Mortgage and loan insurance programs:
Multifamily mortgage insurance premiums, 36968–36969

Interior Department
See Fish and Wildlife Service
See Land Management Bureau
See Minerals Management Service

Internal Revenue Service
RULES
Income taxes:
Loss corporations; interest distributions from qualified trusts, 36676–36678
NOTICES
Meetings:
Taxpayer Advocacy Panels, 36884

Justice Department
See Antitrust Division
See Executive Office for Immigration Review
NOTICES
Pollution control; consent judgments:
Bay-Houston Towing Co., 36825–36826
Gillette Co., 36826
Horne, Donald E., et al., 36826–36827
Industrial Excess Landfill, Inc., 36827
Marine Shale Processors, Inc., et al., 36827–36828
Olin Corp. et al., 36828
Sappi Fine Paper North America, 36828–36829
Southern Wood Piedmont Co. et al., 36829

Labor Department
NOTICES
Agency information collection activities; proposals, submissions, and approvals, 36831–36832
Organization, functions, and authority delegations:
Employment of individuals with disabilities and veterans with disabilities; policy and responsibilities, 36920

Land Management Bureau
NOTICES
Meetings:
Resource Advisory Councils—
Boise District, 36823

Minerals Management Service
NOTICES
Agency information collection activities; proposals, submissions, and approvals, 36823–36825

National Aeronautics and Space Administration
RULES
Federal Acquisition Regulation (FAR):
Assets buy-back, 36939–36941
Central contractor registration; taxpayer identification number validation, 36923–36925
Free trade agreements—
El Salvador, Honduras, and Nicaragua, 36935–36938
Introduction, 36922–36923
Noncommercial modifications of commercial items; submission of cost or pricing data, 36927–36930
Procurement center representatives; procedures, 36925–36927
Small Entity Compliance Guide, 36941–36943
Technical amendments, 36941
Wage Determinations OnLine; implementation, 36930–36935

National Credit Union Administration
RULES
Credit unions:
Indirect vehicle loans; third-party servicing, 36661–36667
Organization and operations—
Membership rules; amendments, 36667–36671

PROPOSED RULES
Credit unions:
Bank Secrecy Act compliance; reporting and filing a Suspicious Activity Report (SAR) guidance, 36720–36723
Conversion of insured credit unions to mutual savings banks; disclosures, voting procedures, etc.; revisions, 36946–36966
Insured status; official sign revision, 36719–36720

National Highway Traffic Safety Administration
NOTICES
Motor vehicle safety standards; exemption petitions, etc.:
Toyota Motor North America, Inc., 36875–36877
Reports and guidance documents; availability, etc.:
Impaired driving records information systems, 36877–36884

National Institutes of Health
NOTICES
Inventions, Government-owned; availability for licensing, 36814–36817
Meetings:
National Center for Research Resources, 36817–36818
National Eye Institute, 36818
National Institute of Allergy and Infectious Diseases, 36818
National Institute of Diabetes and Digestive and Kidney Diseases, 36818–36819
Scientific Review Center, 36819–36820

National Oceanic and Atmospheric Administration
RULES
Fishery conservation and management:
Alaska; fisheries of Exclusive Economic Zone—
Bering Sea and Aleutian Islands groundfish, crab, salmon and scallop, 36694–36714

National Science Foundation
NOTICES
Committees; establishment, renewal, termination, etc.:
Equal Opportunities in Science and Engineering Advisory Committee et al., 36832–36833

Nuclear Regulatory Commission
NOTICES
Applications, hearings, determinations, etc.:
Westinghouse Electric Co., 36833–36834

Overseas Private Investment Corporation
NOTICES
Meetings; Sunshine Act, 36834

Presidential Documents
EXECUTIVE ORDERS
Government agencies and employees:
Public alert and warning system (EO 13407), 36975–36977
Property rights of the American people; protection (EO 13406), 36971–36974

Rural Housing Service
NOTICES
Agency information collection activities; proposals, submissions, and approvals, 36753–36754

Securities and Exchange Commission
NOTICES
Investment Company Act of 1940:
Cohen & Steers VIF Realty Fund, Inc., et al., 36834–36840
Self-regulatory organizations; proposed rule changes:
National Association of Securities Dealers, Inc., 36840–36848
New York Stock Exchange, LLC, 36849–36850
NYSE Arca, Inc., 36850–36862

State Department
NOTICES
Grants and cooperative agreements; availability, etc.:
Community College Summit Initiative Program, 36862–36867
Meetings:
International Telecommunication Advisory Committee, 36867–36868
U.S. Advisory Commission on Public Diplomacy, 36868

Substance Abuse and Mental Health Services Administration
NOTICES
Agency information collection activities; proposals, submissions, and approvals, 36820–36821

Surface Transportation Board
NOTICES
Railroad operation, acquisition, construction, etc.:
Tennessee Railway Co., 36884

Textile Agreements Implementation Committee
See Committee for the Implementation of Textile Agreements

Transportation Department
See Federal Aviation Administration
See Federal Railroad Administration
See National Highway Traffic Safety Administration
See Surface Transportation Board

Treasury Department
See Internal Revenue Service
NOTICES
Agency information collection activities; proposals, submissions, and approvals, 36884

U.S. Citizenship and Immigration Services
NOTICES
Agency information collection activities; proposals, submissions, and approvals, 36822

Separate Parts In This Issue

Part II
Transportation Department, Federal Railroad Administration, 36888–36917

Part III
Labor Department, 36920

Part IV
Defense Department; General Services Administration; National Aeronautics and Space Administration, 36922–36943

Part V
National Credit Union Administration, 36946–36966

Part VI
Housing and Urban Development Department, 36968–36969

Part VII
Executive Office of the President, Presidential Documents, 36971–36977

Reader Aids
Consult the Reader Aids section at the end of this issue for phone numbers, online resources, finding aids, reminders, and notice of recently enacted public laws.

To subscribe to the Federal Register Table of Contents LISTSERV electronic mailing list, go to http://listserv.access.gpo.gov and select Online mailing list archives, FEDREGTOC-L, Join or leave the list (or change settings); then follow the instructions.

CFR PARTS AFFECTED IN THIS ISSUE

A cumulative list of the parts affected this month can be found in the Reader Aids section at the end of this issue.

3 CFR

Executive Orders:

12472 (Amended by 13407) 36975
12630 (See 13406) 36973
13406 36973
13407 36975

Administrative Orders:

Memorandums:
Memorandum of Sept. 15, 1995 (Provisionally revoked by EO 13407) 36975

7 CFR

Proposed Rules:

1000 36715
1001 36715
1005 36715
1006 36715
1007 36715
1030 36715
1032 36715
1033 36715
1124 36715
1126 36715
1131 36715

10 CFR

851 36661

Proposed Rules:

431 36715

12 CFR

701 (2 documents) 36661, 36667
741 36661

Proposed Rules:

327 (3 documents) 36717, 36718
708a 36946
740 36719
748 36720

14 CFR

39 (2 documents) 36671, 36674
97 36674

Proposed Rules:

39 36723
71 (2 documents) 36724, 36725

26 CFR

1 36676

40 CFR

63 36678
180 36687

Proposed Rules:

60 36726
63 36730
180 36731
300 36736

47 CFR

64 36690
73 (2 documents) 36693

Proposed Rules:

73 (2 documents) 36741

48 CFR

Ch. 1 (2 documents) 36922, 36941
2 36923
4 (2 documents) 36923, 36930
8 36941
10 36925
15 36927
19 36925
22 36930
25 36935
31 36939
33 36941
47 36930
52 (4 documents) 36923, 36930, 36935, 36941
53 36930

49 CFR

229 36888
238 36888

50 CFR

679 36694

Proposed Rules:

10 36742
13 36742
17 (3 documents) 36742, 36743, 36745
23 36742

Rules and Regulations

Federal Register

Vol. 71, No. 124

Wednesday, June 28, 2006

This section of the FEDERAL REGISTER contains regulatory documents having general applicability and legal effect, most of which are keyed to and codified in the Code of Federal Regulations, which is published under 50 titles pursuant to 44 U.S.C. 1510.

The Code of Federal Regulations is sold by the Superintendent of Documents. Prices of new books are listed in the first FEDERAL REGISTER issue of each week.

DEPARTMENT OF ENERGY

10 CFR Part 851

[Docket No. EH–RM–04–WSHP]

RIN 1901–AA99

Worker Safety and Health Program; Correction

AGENCY: Department of Energy.

ACTION: Final rule; correction.

SUMMARY: The Department of Energy published in the **Federal Register** of February 9, 2006, a final rule to implement the statutory mandate of section 3173 of the Bob Stump National Defense Authorization Act (NDAA) for Fiscal Year 2003 to establish worker safety and health regulations govern contractor activities at DOE sites. Inadvertently there were some typographical errors made in several sections of the rule. This document corrects that version of the final rule.

DATES: This correction is effective on June 28, 2006.

FOR FURTHER INFORMATION CONTACT: Jacqueline D. Rogers, U.S. Department of Energy, Office of Environment, Safety and Health, EH–52, 1000 Independence Avenue, SW., Washington, DC 20585, 202–586–4714.

SUPPLEMENTARY INFORMATION: The Department of Energy published a document in the **Federal Register** of February 9, 2006, (71 FR 6857) establishing (1) the framework for a worker protection program that will reduce or prevent occupational injuries, illnesses, and accidental losses by requiring DOE contractors to provide their employees' with safe and healthful workplaces; and (2) procedures for investigating whether a requirement has been violated, for determining the nature of such violations, and for imposing appropriate remedy.

In FR Doc. 06–964, published in the **Federal Register** of February 9, 2006, (71 FR 6857), make the following corrections to the preamble:

(1) On page 6898, in the third column, at the beginning of the first full paragraph, remove the words ''Section 851.26(a)'' and add in its place ''Section 851.26(a)(1)''.

(2) On page 6898, in the third column, at the beginning of the second paragraph, remove the words ''Section 851.26(a)(1)'' and add in its place ''Section 851.26(a)(2)''.

(3) On page 6898, in the third column, at the beginning of the third paragraph, remove the words ''Section 851(a)(2)'' and add in its place ''Section 851(a)(3)''.

(4) On page 6898, in the third column, at the beginning of the fourth paragraph, remove the words ''Section 851.26(b)'' and add in its place ''Sections 851.26(b)(1) and (2)''.

(5) On page 6898, in the third column, at the beginning of the fifth paragraph, remove the words ''Section 851.26(c)'' and add in its place ''Section 851.26(a)(4)''.

■ In the same document make the following corrections to the regulatory text:

§ 851.7 [Corrected]

■ (1) On page 6933, in the third column, § 851.7(a) add the word ''shall'' before the word ''have''.

§ 851.31 [Corrected]

■ (2) On page 6938, in the first column, paragraph (d)(1) remove the words ''paragraph (b)'' and add in its place ''paragraph (c)''.

■ (3) On page 6938, in the second column, paragraphs (d)(2) and (d)(3)(i), remove the words ''paragraph (b)'' and add in its place ''paragraph (c)''.

Appendix A—[Corrected]

■ (4) On page 6941, in the second column, paragraph (c)(3) add the word ''unique'' before the words ''pressure vessel''.

Issued in Washington, DC on June 20, 2006.

C. Russell H. Shearer,

Acting Assistant Secretary for Environment, Safety and Health.

[FR Doc. 06–5864 Filed 6–27–06; 8:45 am]

BILLING CODE 6450–01–P

NATIONAL CREDIT UNION ADMINISTRATION

12 CFR Parts 701 and 741

Third-Party Servicing of Indirect Vehicle Loans

AGENCY: National Credit Union Administration.

ACTION: Final rule.

SUMMARY: The National Credit Union Administration (NCUA) is issuing a final rule to regulate purchases by federally insured credit unions of indirect vehicle loans serviced by third-parties. The rule limits the aggregate amount of these loans serviced by any single third-party to a percentage of the credit union's net worth. The rule ensures that federally insured credit unions do not undertake undue risk with these purchases.

DATES: This rule is effective July 28, 2006.

FOR FURTHER INFORMATION CONTACT: Paul Peterson, Staff Attorney, Division of Operations, Office of General Counsel, at (703) 518–6540; Matthew Biliouris, Program Officer, Office of Examination and Insurance, at (703) 518–6360; or Steve Sherrod, Division of Capital Markets Director, Office of Capital Markets and Planning, at (703) 518–6620.

SUPPLEMENTARY INFORMATION:

A. Background

In December 2005, the Board issued for public comment a proposed rule establishing concentration limits for indirect automobile loans and loan participations serviced by third-party servicers. 70 FR 75753 (Dec. 21, 2005). As stated in the preamble to the proposed rule, the Board recognizes indirect lending has certain advantages for credit unions, such as growth in membership and loans, but is concerned some credit unions may involve themselves in indirect, outsourced programs—meaning programs in which a third party manages a credit union's relationship with automobile dealers and, because the third party handles loan servicing, with the credit union's members as well—without undertaking adequate due diligence, implementing appropriate controls, and having sufficient experience with a third party servicer.

The Board proposed to limit the aggregate amount of outsourced loans and participations in outsourced loans a credit union may purchase from any one servicer to 50 percent of the credit union's net worth. After 30 months of experience with a particular servicer, the limit increases to 100 percent of net worth. The proposal exempted federally-insured depositories and wholly-owned subsidiaries of those depositories from the definition of servicer. The proposal also included a process and requirements for a credit union to request a waiver from the concentration limits from its regional director.

Briefly summarized, this final rule retains the concentration limits, the servicer exemptions, and the waiver provision as proposed but, in response to public comments, the Board has made certain changes in the final rule. The final rule includes an additional exemption for certain credit union service organization (CUSO) servicers and excludes loans in which the servicer and its affiliates were not involved in the origination process from the concentration limits. These changes, while not affecting the rule's substantive and procedural rationales, are beneficial to credit unions by narrowing the rule's scope and impact. The final rule also includes a 45-day time period for a regional director to act on waiver requests and provides for an appeal to the NCUA Board. These changes are discussed in more detail in the following section on public comments.

B. Public Comments on the Proposed Rule

NCUA received 27 comment letters from a variety of sources, including a state supervisory authority (SSA), credit unions, credit union trade organizations, and vendors involved in third-party servicing. The following summary categorizes the comments into general comments about the rule and comments about specific provisions with the Board's response to comments, as appropriate.

General Comments

Several commenters believe this rulemaking is a good idea. One commenter stated ''NCUA's concerns are valid, and its proposal basically sound.'' Several commenters stated the specific concentration limits were reasonable and the waiver provisions appropriate. The SSA stated it shares NCUA's concern about indirect lending in general and specifically the risks related to third-party servicing arrangements for indirect vehicle lending. This SSA stated it had reviewed a number of these programs and found structural weaknesses and that reported returns failed to reflect credit losses and collection costs.

Several commenters were generally opposed to the rulemaking. A few of these commenters contended NCUA's existing guidance was sufficient to deal with the risks of indirect automobile loans serviced by third-party servicers. One of these commenters stated that each credit union's board should have flexibility to set policy limits in indirect lending just as they do with other types of lending. One commenter stated the proposal manages credit unions to the lowest common denominator and unnecessarily encumbers a credit union's ability to use indirect lending to manage the asset liability management (ALM) process.

The Board appreciates these concerns and does not wish to unnecessarily limit the flexibility of credit union management or encumber a credit union's ability to manage its ALM process. As stated in the preamble to the proposed rule, indirect lending programs with third-party servicing carry risk for credit unions. When these programs involve a significant percentage of the credit union's net worth, these programs also create risks for the National Credit Union Share Insurance Fund (NCUSIF). Accordingly, the Board believes concentration limits are appropriate but credit unions demonstrating sufficient due diligence should be permitted to apply for and receive waivers to the concentration limits.[1]

Comments About the Specific Concentration Limits

As proposed, the rule permits a credit union to buy indirect vehicle loans serviced by a third-party servicer in an amount up to 50 percent of net worth for the first 30 months of the servicing relationship and, thereafter, up to 100 percent of net worth.

Some commenters contended the rule should permit a credit union to invest up to 100 percent of its net worth after only 18 or 24 months in a program instead of having to wait 30 months. A few commenters also thought the initial concentration limit should be 75 percent of net worth instead of 50 percent. Some of these latter commenters thought that a 75 percent limit would be appropriate but only for credit unions with a composite CAMEL 1 rating.[2] A few commenters contended credit unions qualifying for the NCUA Regulatory Flexibility Program should be entirely exempt from the proposed limits. 12 CFR part 742.

The Board believes a credit union should have sufficient experience with a third-party servicer before entrusting it with indirect vehicles loans in an amount equaling the credit union's entire net worth. Given the expected lives of various types of vehicle loans, the Board continues to believe 30 months is a reasonable time for a credit union to obtain the experience. Accordingly, the final rule retains the 30-month time period.

The Board also believes half of a credit union's net worth is a reasonable exposure during its initial involvement with a third-party servicer, regardless of a credit union's CAMEL rating. As stated in the preamble to the proposed rule, risks associated with these programs are similar to risks associated with asset backed securities (ABS). While natural person credit unions generally may not invest in ABS, national banks may, and the Office of the Comptroller of the Currency (OCC) limits a bank's aggregate investments in ABS issued by any one issuer to 25 percent of capital and surplus. 12 CFR 1.3(f). Since the capital and surplus of a national bank is roughly equivalent to the net worth of a natural person credit union, the 50 percent and 100 percent limits in the proposed rule are significantly less restrictive than the 25 percent that the OCC permits for national bank investment in ABS. In addition, the OCC's 25 percent concentration limit on ABS applies to all banks, regardless of the bank's asset size or net worth ratio or the general performance ratings that OCC examiners assign to a particular bank. NCUA's proposal is less restrictive than the OCC's ABS limits because NCUA wants to encourage lending, but some safety and soundness limits are necessary. Accordingly, the final rule retains 50 percent as the initial limit for credit unions and 100 percent as the general limit, subject to a credit union receiving a waiver.

One commenter analogized the risks the proposal addressed to the risks of participation lending and suggested concentration limits should be related to loans to a single borrower, not to a particular servicer. The Board believes risks associated with third-party servicing of indirect vehicle loans apply equally to whole loans and participation interests in loans and these risks are best constrained by limits expressed in

[1] A credit union below the concentration limits must still perform due diligence at a level commensurate with the program risks.

[2] For a discussion of CAMEL ratings, see NCUA Letter to Credit Unions No. 03–CU–04, Subject: CAMEL Rating System, dated March 2003, located on NCUA's Web site at *http://www.ncua.gov.*

terms of exposure to particular servicers. Another commenter stated concentration limits should be set as a percentage of paid-in and unimpaired capital and surplus rather than as a percentage of net worth. This commenter believes using net worth in the calculation encourages credit unions to maintain unnecessarily high levels of net worth.

The Board believes third-party servicer concentration limits, which protect the viability of the credit union and also limit risk to the NCUSIF, are best expressed in terms of a credit union's net worth and not in terms of paid-in and unimpaired capital and surplus. Paid-in and unimpaired capital and surplus includes both shares and undivided earnings. 12 CFR 700.2(f). Including shares in this definition means a credit union with relatively low levels of net worth could have significant paid-in and unimpaired capital. Accordingly, concentration limits calculated as a percentage of the paid-in and unimpaired capital and surplus may not adequately protect a credit union or the NCUSIF.

The Board confirms, as some commenters requested, that the concentration limits are calculated based on the outstanding loan balance. Further, the Board clarifies, as requested by one commenter, that a credit union may calculate the initial 30-month servicing relationship period from a date preceding this rulemaking. The 30-month servicing relationship period starts from the date a credit union first acquires an interest in loans from a particular third-party servicer.

Comments About Exemptions for Certain Types of Servicers

The proposal exempted servicers that are federally-insured depository institutions or wholly-owned subsidiaries of federally-insured depository institutions from the concentration limits. The rationale for this exemption is federal regulators have access to and oversight of these entities. Many comment letters addressed this exemption.

Several commenters contended the ''wholly-owned subsidiary'' exemption should be broadened to include servicers that are only partially owned by credit unions. These commenters suggested various alternatives to the ''wholly-owned subsidiary'' language, including: exempting any servicer that is also a CUSO; any CUSO that has a majority of voting interests owned by federally-insured depository institutions; or any CUSO that has a majority of voting interests owned by federally-insured depository institutions and to which SSAs have access. One commenter also stated additional language could be added to require access by a Federal regulatory authority.

NCUA understands the concerns of these commenters. As suggested by some of the commenters, the final rule exempts any servicing entity that has a majority of its voting interests owned by federally-insured credit unions and that includes in its servicing agreements with credit unions a provision providing NCUA with access to the servicer's books and records and the ability to review its internal controls. This written access provision is similar to the CUSO rule requirement that federal credit unions and their CUSOs must agree in writing to permit NCUA access to the CUSO. 12 CFR 712.3(d)(3). Credit unions relying on this exemption must provide the regional director a copy of the servicing agreement. This will keep regional directors informed of the number of these arrangements, particularly regarding state-chartered credit unions that NCUA does not examine on a regular basis.

A few commenters suggested NCUA should exempt any servicer that agrees to allow NCUA access, whether or not the servicer is affiliated with a federally-insured credit union. Absent at least majority ownership of the servicer by federally insured credit unions, the Board does not believe an agreement will assure unfettered and cooperative access. Similarly, while a few commenters stated access by an SSA should be sufficient to exempt a servicer from the rule, the Board concludes the circumstances this rule addresses present particular safety and soundness concerns requiring NCUA or another Federal insurer to have access to the servicing entity.

One commenter suggested the rule should be changed to apply only to those servicers involved in the loan origination process. This commenter contended that, where a credit union controls the underwriting process, uses its own dealer relationships for originations, and contracts directly with an independent, financially sound servicer with appropriate asset class experience, the credit union's risks are not significantly different from risks in its internal programs and, therefore, should not have different concentration limits.

As stated in the preamble to the proposed rule, NCUA is primarily concerned with indirect vehicle lending programs where both control over the loan origination process and servicing are outsourced to a third-party. While NCUA drafted the proposed concentration limits so as to apply to any indirect loan serviced by a third-party servicer, regardless of the servicer's involvement in the loan origination process, after considering the comments, the Board agrees separating servicing from other aspects of the loan, such as underwriting, originating, or insuring, mitigates the overall risk. Accordingly, the Board has determined to exclude loans in which the servicer and its affiliates have no involvement with the loan other than servicing from the concentration limit. Specifically, the final rule excludes from the definition of covered vehicle loans any loan where neither the third-party servicer nor any of its affiliates are involved in underwriting, originating, or insuring the loan or the process by which the credit union acquires its interest in the loan.

Aside from this modification, the final rule retains the basic definition of vehicle loan, that is, ''any installment vehicle sales contract or its equivalent that is reported as an asset under generally accepted accounting principles [GAAP].'' The Board notes that, under GAAP, an interest in a vehicle loan transferred with recourse may not be a true sale. *See* Financial Accounting Standards Board Standard No. 140. If the transfer does not warrant true sale accounting, the transferred loan interest would remain as an asset on the transferring credit union's books and, if serviced by a third-party servicer, count toward the concentration limits.

Comments About Definitions

The proposal defined net worth as:

> [T]he retained earnings balance of the credit union at quarter end as determined under generally accepted accounting principles. For low income-designated credit unions, net worth also includes secondary capital accounts that are uninsured and subordinate to all other claims, including claims of creditors, shareholders, and the National Credit Union Share Insurance Fund.

Proposed § 701.21(h)(3)(iv). A few commenters believe this definition of ''net worth'' should be modified to permit calculation of the appropriate limits from the line items on NCUA's Call Report, NCUA Form 5300.

NCUA's current Call Report has an automated ''PCA Net Worth Calculation Worksheet.'' If a credit union makes accurate Call Report entries, line 7 of this Worksheet, entitled ''Total Net Worth,'' will provide the credit union with its retained earnings balance as determined under generally accepted accounting principles. This information can help credit unions determine their net worth for purposes of these concentration limits. The final rule text, however, does not refer to the Call

Report directly since NCUA modifies the Call Report and the specific line items change on occasion.

The concentration limits will apply to all indirect vehicle loans serviced by a particular third-party servicer and its affiliates. The proposal defined affiliate as follows:

> The term ''its affiliates,'' as it relates to the third-party servicer, means any entities that: (A) Control, are controlled by, or are under common control with, that third-party servicer; or (B) are under contract with that third-party servicer or other entity described in paragraph (h)(3)(ii)(A) of this section.

Proposed § 701.21(h)(3)(ii). One commenter asked why the proposed definition includes entities under contract as well as entities under common control. If a credit union is using two or more servicers to service indirect automobile loans, the Board believes the loans of both servicers should be aggregated for purposes of the concentration limits if there is any contractual connection between the two servicers.[3] If the contractual relationship does not increase the risk to a credit union in a particular case, it may seek a waiver from the regional director under the rule's waiver provisions and provide the regional director with details about the contractual relationship.

One commenter thought that, in the definition of ''servicer,'' the phrase ''pursuant to the terms of a loan'' should be clarified to ensure that lockbox relationships are not inadvertently covered by the regulation.[4] The Board understands lockbox accounts are typically established at banks, and the rule's definition of servicer specifically excludes banks and other federally-insured depository institutions and their wholly-owned subsidiaries. While a bank is excluded from the rule, any other entity falling within the definition of servicer is subject to the rule whether or not it employs a lockbox account arrangement as part of its servicing activities.

Comments About the Waiver Provision

The proposal provided that a regional director, upon request, could grant a credit union a waiver from the concentration limits. The proposal provided criteria a regional director will consider when evaluating a waiver request, including: a credit union's understanding of the third-party servicer's organization, business model, financial health, and the related program risks; the credit union's due diligence in monitoring and protecting against program risks; the contracts between the credit union and the third-party servicer; and other factors relevant to safety and soundness. Many commenters thought this waiver provision was a good idea and the provision for a waiver and proposed criteria are retained in the final rule.

Several commenters suggested the waiver provision should set a time period for a regional director's decision. A few commenters thought the rule should permit appeal of a waiver decision to the NCUA Board. The Board agrees with these commenters. The final rule provides that a regional director will make a written determination on a waiver request within 45 calendar days after receipt of the request. The 45-day period will not begin until a credit union has submitted all necessary information to the regional director. A credit union may appeal any part of the determination to the NCUA Board. Appeals must be submitted through the regional director within 30 days of the date of the determination. The Board believes these time periods are reasonable and notes they are similar to other waiver processes the Board has adopted. *See, e.g.,* 12 CFR 701.36(a)(2)(iii).

Two commenters thought the rule should permit state chartered credit unions to obtain waivers from their SSAs rather than from a regional director. The proposed rule required the SSA of a state chartered credit union to concur before the regional director grants a waiver, and the final rule retains this requirement. Because third-party servicing of indirect vehicle loans creates risk for the NCUSIF, however, NCUA should have a role in the decision to grant or deny all waivers.

One commenter thought the waiver procedure was overly burdensome. The Board understands the commenter's concern, but believes it has balanced safety and soundness concerns appropriately with the burden associated with requesting a waiver. Another commenter questioned why an approved waiver should have an expiration date. Circumstances change with the passage of time, including the structure of the servicer, the content of its program, and the composition of the credit union's internal staff and due diligence. Given the significance of the risks, a credit union with an existing waiver should demonstrate periodically that it understands and controls the risks associated with a servicer's program.

Two commenters sought clarification that credit unions could request a waiver from the initial concentration limit of 50 percent as well as the 100 percent concentration limit. The Board confirms that, as proposed and as provided in the final rule, credit unions may request waivers of either limit.

One commenter noted one of the criteria a regional director will consider when reviewing a waiver is the ability of a credit union to replace an inadequate servicer. This commenter expressed concern that credit unions purchasing participation interests generally have little or no ability under standard servicing contracts to replace the servicer. The Board agrees an owner of a loan participation interest is unlikely to have much say in replacing a poor servicer but notes this criterion is only one factor among several a regional director considers in determining whether to grant a waiver request.

Several commenters stated they would like additional information about the requirements for a waiver. Two commenters thought waiver criteria should include information about the rating of any associated insurance company. The Board believes the rule sufficiently describes the criteria a regional director will consider but provides the following additional discussion of the criteria and documentation for waiver requests. Much of this discussion is repeated from the preamble of the proposed rule. 70 FR 75753, 75756 (Dec. 21, 2005).

Credit unions seeking higher concentration limits should have high levels of due diligence and tight controls. Due diligence, in turn, begins with a demonstrated understanding of the third-party servicer's organization, business model, financial health, and program risks. Accordingly, a waiver request should provide information about the following:

- The vendor's organization, including identification of subsidiaries and affiliates involved in the program and the purpose of each;
- The various sources of income to the vendor and the credit union in the program and any potential vendor conflicts with the interests of the credit union;

[3] Although a credit union has a contract with its third-party servicer, the credit union is not an affiliate servicer for purposes of calculating compliance with its own concentration limits. In other words, a credit union does not have to aggregate any loans that it services in-house with loans serviced by third-party servicers.

[4] A ''lock box'' is a ''[c]ash management system whereby a company's customers mail payments to a post office box near the company's bank. The bank collects checks from the lock box * * * deposits them directly to the account of the firm, and informs the company's cash manager by telephone of the deposit. This reduces the float and puts cash to work more quickly.'' J. Downes and J. Goodman, Barron's Dictionary of Finance and Investment Terms, 333 (5th ed. 1998).

• The experience, character, and fitness of the vendor's owners and key employees;

• The vendor's ability to fulfill commitments, as evidenced by aggregate financial commitments, capital strength, liquidity, reputation, and operating results; [5]

• How loan-related cash flows, including borrower payments, borrower payoffs, and insurance payments, are tracked and identified in the program;

• An analysis of whether, in the event of the servicer's insolvency, the various borrower, insurance, and resale payments in the possession of the servicer and the vehicle collateral are protected from the bankruptcy trustee;

• The vendor's internal controls to protect against fraud and abuse, as documented by, for example, a current SAS 70 type II report prepared by an independent and well-qualified accounting firm;

• Insurance offered by the vendor, including interrelated insurance products, premiums, conditions for coverage beyond the control of the credit union (*e.g.*, a prohibition on extension of the insured loans past maturity), the rating of the insurer, and limitations such as aggregate loss limits;

• The underwriting criteria provided by the vendor, including an analysis of the expected yield based on historical loan data, and a sensitivity analysis considering the potential effects of a deteriorating economic environment, failure of associated insurance, the possibility of fraud at the servicer, a decline in average portfolio credit quality, and, if applicable, movement in the program back toward industry-wide performance statistics; [6]

• Vendor involvement in the underwriting and processing of loan applications, including use of proprietary scoring or screening models not included in the credit union approved underwriting criteria; and

• The program risks, including (1) Credit risk, (2) liquidity risk, (3) transaction risk, (4) compliance risk, (5) strategic risk, (6) interest rate risk, and (7) reputation risk.

To qualify for a waiver of concentration limits, the servicing agreement should also include more than minimal protections for the credit union. Servicer performance standards should be objective and clear, and a waiver request should clearly articulate how the performance standards protect the interests of the credit union. The exit clause, including any cure period, should be exercisable in a reasonable period of time. The more intensive the requisite servicing, such as for nonprime or subprime loans, the shorter that period of time should be. A credit union's right to exit the servicing agreement should be exercisable at a reasonable cost to the credit union. If a credit union must pay a punitive fee to replace a poor servicer, give up valuable insurance protection, or forfeit legal rights without adequate compensation, the servicing agreement will not satisfy this waiver criterion.

Some indirect, outsourced programs have complex business models that include vendor management of the dealer relationship and also insurance provided by the vendor. These business models can produce situations where the vendor's financial interests are not aligned with the credit union's interests. The credit union needs to be aware of these situations and, if appropriate, take protective action.

For example, a dealer's interest in an indirect lending situation is to obtain financing so the dealer can sell a vehicle. A credit union's interest is to ensure loan applications are properly underwritten and only members meeting the underwriting standards receive loans. With an indirect, outsourced program, a third-party vendor controls information on the quality of a particular dealer's originations. A vendor could present loans to a credit union from a changing list of dealers, making it difficult for a credit union to identify and screen substandard dealers. This creates a potential for the vendor to permit dealers with substandard underwriting performance to remain active in the program.

Unlike typical indirect lending where a dealer receives an origination fee, in some vendor programs, a vendor processes loan applications for the credit union and also receives significant income from dealer fees. A credit union needs to fully understand the relationship between the vendor and the dealers. Credit unions seeking a concentration limit waiver should review agreements between the vendor and associated dealers.

Some vendors provide third-party default insurance or reinsurance and this presents a potential conflict between the vendor as servicer and the vendor as insurer. Accordingly, a credit union needs to understand the relationship between the vendor and the insurance company and the associated risks to the credit union. To understand this relationship fully, a credit union desiring a concentration limit waiver should review all agreements between the vendor, affiliates of the vendor, and the associated insurance companies.

Another potential conflict exists where the vendor controls the dealer relationship and can route a potential loan to multiple funding sources. For example, some vendors track statistics on loan performance by dealership. A credit union should be aware if a vendor then routes loan applications from the preferred dealerships to the preferred funding sources. A credit union desiring a waiver should understand the various funding sources available to the vendor and document how the vendor tracks vendor performance and makes funding decisions.

With each identified risk, a credit union should explain to the regional director how it plans to eliminate or mitigate the risk. Some, but not all, risks may be dealt with through contractual arrangements. For example, the credit union must ensure that its contracts with the servicer grant the credit union sufficient control over the servicer's actions and provide for replacing an inadequate servicer. As NCUA stated in Letter to Credit Unions No. 04–CU–13, and, again, in NCUA Risk Alert No. 05–01, safety and soundness requires a credit union to limit the power of a third-party servicer to alter loan terms. Also, the servicing contract must contain a mechanism, or exit clause, to replace an unsatisfactory servicer.

A regional director may also consider any legal reviews obtained by the credit union on these contracts and should consider the scope and depth of the review and the reviewer's qualifications.

Regional directors may consider other relevant factors when determining whether to grant a waiver of concentration limits as well as the size of any substitute limit. Other factors include the demonstrated strength of the credit union's management and the credit union's previous history in exercising due diligence over similar programs. In addition, higher concentration levels entail more risk to the net worth of a credit union, and so the requisite due diligence also depends on the substitute concentration limit the credit union requests.

C. Effective Date

The effective date of this final rule is 30 days from the date of publication in the **Federal Register**.

[5] Nationally recognized statistical rating organization (NRSRO) ratings, multi-year audited and segmented financials, and explanations of related party transactions and changes to the net worth of the vendor, if any, are also relevant.

[6] If the program loans have historically outperformed industry averages, perhaps because of lower prepayment rates or lower default proportions, a credit union should calculate expected yield if the prepayment rates or default proportions move upwards toward the industry averages.

As discussed in the preamble to the proposed rule, 70 FR 75753, 75757 (Dec. 21, 2005), several credit unions that currently participate in indirect, outsourced programs have concentration levels that exceed the proposed concentration limits. For those credit unions that exceed the concentration limits on the effective date, the rule will not require any divestiture. The rule will prohibit these credit unions from purchasing any additional loans, or interests in loans, from the affected vendor program until such time as the credit union either reduces its holdings below the appropriate concentration limit or the credit union obtains a waiver to permit a greater concentration limit.

The Board is concerned that some credit unions may consider making large purchases of loans that would be subject to the rule before the effective date of the final rule. NCUA will review any large purchases closely and credit unions should be advised that NCUA may consider appropriate supervisory action, including divestiture, to ensure that the credit union's actions were safe and sound.

D. Regulatory Procedures

Regulatory Flexibility Act

The Regulatory Flexibility Act requires NCUA to prepare an analysis to describe any significant economic impact a proposed rule may have on a substantial number of small credit unions (those under $10 million in assets). This final rule establishes for federally-insured credit unions a concentration limit on indirect vehicle loans serviced by certain third parties. In the preamble of the proposed rule NCUA published its estimate that no more than five small credit unions were involved in purchasing vehicle loans, or interests in loans, from an indirect, outsourced vendor program. NCUA received no comments on this estimate. Accordingly, NCUA has determined that the rule will not have a significant economic impact on a substantial number of small credit unions and that a regulatory flexibility analysis is not required.

Paperwork Reduction Act

The waiver provision in § 701.21(h)(2) contains information collection requirements. As required by the Paperwork Reduction Act of 1995 (44 U.S.C. 3507(d)), NCUA submitted a copy of the proposed rule as part of an information collection package to the Office of Management and Budget (OMB) for its review and approval of a new Collection of Information, Third-Party Servicing of Indirect Vehicle Loans. On March 1, 2006, OMB approved this new Collection of Information. The OBM Collection Number is 3133–0171.

Executive Order 13132

Executive Order 13132 encourages independent regulatory agencies to consider the impact of their actions on state and local interests. In adherence to fundamental federalism principles, NCUA, an independent regulatory agency as defined in 44 U.S.C. 3502(5), voluntarily complies with the executive order. This rule will not have substantial direct effects on the states, on the connection between the national government and the states, or on the distribution of power and responsibilities among the various levels of government. NCUA has determined that this rule does not constitute a policy that has federalism implications for purposes of the Executive Order.

The Treasury and General Government Appropriations Act, 1999—Assessment of Federal Regulations and Policies on Families

NCUA has determined that this rule would not affect family well-being within the meaning of section 654 of the Treasury and General Government Appropriations Act, 1999, Pub. L. 105–277, 112 Stat. 2681 (1998).

Small Business Regulatory Enforcement Fairness Act

The Small Business Regulatory Enforcement Act of 1996 (Pub. L. 104–121) provides generally for congressional review of agency rules. A reporting requirement is triggered in instances where NCUA issues a final rule as defined by section 551 of the Administrative Procedure Act. 5 U.S.C. 551. The Office of Management and Budget has determined that this rule is not a major rule for purposes of the Small Business Regulatory Enforcement Fairness Act of 1996.

List of Subjects

12 CFR Part 701

Credit unions, Loans.

12 CFR Part 741

Credit unions, Requirements for insurance.

By the National Credit Union Administration Board on June 22, 2006.

Mary Rupp,

Secretary of the Board.

■ For the reasons stated in the preamble, the National Credit Union Administration amends 12 CFR parts 701 and 741 as set forth below:

PART 701—ORGANIZATION AND OPERATION OF FEDERAL CREDIT UNIONS

■ 1. The authority citation for part 701 continues to read as follows:

Authority: 12 U.S.C. 1752(5), 1755, 1756, 1757, 1759, 1761a, 1761b, 1766, 1767, 1782, 1784, 1787, and 1789. Section 701.6 is also authorized by 31 U.S.C. 3717. Section 701.31 is also authorized by 15 U.S.C. 1601 *et seq.*; 42 U.S.C. 1981 and 3601–3619. Section 701.35 is also authorized by 42 U.S.C. 4311–4312.

■ 2. Add a new paragraph (h) to § 701.21 to read as follows:

§ 701.21 Loans to members and lines of credit to members.

* * * * *

(h) *Third-party servicing of indirect vehicle loans.* (1) A federally-insured credit union must not acquire any vehicle loan, or any interest in a vehicle loan, serviced by a third-party servicer if the aggregate amount of vehicle loans and interests in vehicle loans serviced by that third-party servicer and its affiliates would exceed:

(i) 50 percent of the credit union's net worth during the initial thirty months of that third-party servicing relationship; or

(ii) 100 percent of the credit union's net worth after the initial thirty months of that third-party servicing relationship.

(2) Regional directors may grant a waiver of the limits in paragraph (h)(1) of this section to permit greater limits upon written application by a credit union. In determining whether to grant or deny a waiver, a regional director will consider:

(i) The credit union's understanding of the third-party servicer's organization, business model, financial health, and the related program risks;

(ii) The credit union's due diligence in monitoring and protecting against program risks;

(iii) If contracts between the credit union and the third-party servicer grant the credit union sufficient control over the servicer's actions and provide for replacing an inadequate servicer; and

(iv) Other factors relevant to safety and soundness.

(3) A regional director will provide a written determination on a waiver request within 45 calendar days after receipt of the request; however, the 45-day period will not begin until the requesting credit union has submitted all necessary information to the regional director. If the regional director does not

provide a written determination within the 45-day period the request is deemed denied. A credit union may appeal any part of the determination to the NCUA Board. Appeals must be submitted through the regional director within 30 days of the date of the determination.

(4) For purposes of paragraph (h) of this section:

(i) The term ''third-party servicer'' means any entity, other than a federally-insured depository institution or a wholly-owned subsidiary of a federally-insured depository institution, that receives any scheduled, periodic payments from a borrower pursuant to the terms of a loan and distributes payments of principal and interest and any other payments with respect to the amounts received from the borrower as may be required pursuant to the terms of the loan. The term also excludes any servicing entity that meets the following three requirements:

(A) Has a majority of its voting interests owned by federally-insured credit unions;

(B) Includes in its servicing agreements with credit unions a provision that the servicer will provide NCUA with complete access to its books and records and the ability to review its internal controls as deemed necessary by NCUA in carrying out NCUA's responsibilities under the Act; and

(C) Has its credit union clients provide a copy of the servicing agreement to their regional directors.

(ii) The term ''its affiliates,'' as it relates to the third-party servicer, means any entities that:

(A) Control, are controlled by, or are under common control with, that third-party servicer; or

(B) Are under contract with that third-party servicer or other entity described in paragraph (h)(4)(ii)(A) of this section.

(iii) The term ''vehicle loan'' means any installment vehicle sales contract or its equivalent that is reported as an asset under generally accepted accounting principles. The term does not include:

(A) Loans made directly by a credit union to a member, or

(B) Loans in which neither the third-party servicer nor any of its affiliates are involved in the origination, underwriting, or insuring of the loan or the process by which the credit union acquires its interest in the loan.

(iv) The term ''net worth'' means the retained earnings balance of the credit union at quarter end as determined under generally accepted accounting principles. For low income-designated credit unions, net worth also includes secondary capital accounts that are uninsured and subordinate to all other claims, including claims of creditors, shareholders, and the National Credit Union Share Insurance Fund.

* * * * *

PART 741—REQUIREMENTS FOR INSURANCE

■ 3. The authority citation for part 741 continues to read as follows:

Authority: 12 U.S.C. 1757, 1766, 1781–1790, and 1790d. Section 741.4 is also authorized by 31 U.S.C. 3717.

■ 4. Add a new paragraph (c) to § 741.203 to read as follows:

§ 741.203 Minimum loan policy requirements.

* * * * *

(c) Adhere to the requirements stated in § 701.21(h) of this chapter concerning third-party servicing of indirect vehicle loans. Before a state-chartered credit union applies to a regional director for a waiver under § 701.21(h)(2), it must first notify its state supervisory authority. The regional director will not grant a waiver unless the appropriate state official concurs in the waiver. The 45-day period for the regional director to act on a waiver request, as described § 701.21(h)(3), will not begin until the regional director has received the state official's concurrence and any other necessary information.

[FR Doc. E6–10137 Filed 6–27–06; 8:45 am]

BILLING CODE 7535–01–P

NATIONAL CREDIT UNION ADMINISTRATION

12 CFR Part 701

Organization and Operations of Federal Credit Unions

AGENCY: National Credit Union Administration (NCUA).

ACTION: Final rule.

SUMMARY: NCUA is amending its field of membership rules regarding service to underserved areas to limit underserved area additions to multiple common-bond credit unions and revise facility requirements for underserved areas. These amendments are being made after a comprehensive review of chartering policy based upon NCUA's experience addressing field of membership issues and the uncertainty resulting from recent litigation challenging service to underserved areas in Utah and the current ambiguity in the Federal Credit Union Act on this issue. This final rule will ensure continued reliable and efficient service to federal credit union members located in approved underserved areas and continue to allow multiple common-bond credit unions to add underserved areas to their charters. The final rule generally adopts the amendments as proposed. In addition, the final rule retains the definition of service facility as a credit union owned facility where shares are accepted for members' accounts, loan applications are accepted, and loans are disbursed.

DATES: Effective July 28, 2006

FOR FURTHER INFORMATION CONTACT: Michael J. McKenna, Deputy General Counsel, John K. Ianno, Senior Trial Attorney, or Regina Metz, Staff Attorney, Office of General Counsel, 1775 Duke Street, Alexandria, Virginia 22314 or telephone (703) 518–6540.

SUPPLEMENTARY INFORMATION:

A. Background

NCUA's chartering and field of membership policy is set out in NCUA's Chartering and Field of Membership Manual (Chartering Manual), Interpretive Ruling and Policy Statement 03–1. 68 FR 18333, Apr. 15, 2003. The policy is incorporated by reference in NCUA's regulations at 12 CFR 701.1. On December 29, 2005, the NCUA Board issued a moratorium suspending that portion of its chartering policy allowing non-multiple-common-bond credit unions to add new underserved areas. After establishing a moratorium, the NCUA conducted a comprehensive review of its underserved area policy.

On January 19, 2006, the NCUA Board approved a proposed rule regarding service to underserved areas. 71 FR 4530, Jan. 27, 2006. The NCUA proposed two amendments that would apply only prospectively. The first proposed change was to limit the addition of new underserved areas to only multiple common-bond credit unions. The second proposed change was to the definition and location of the service facility. When adding underserved areas, NCUA proposed requiring a physical presence in the underserved areas to assure better service to members in these locations and deleting the choice of a credit union owned electronic facility with certain functions as a service facility.

B. Comments

NCUA welcomed general comments on the proposed rule and also on all aspects of NCUA's rules on credit unions serving underserved areas. In addition to seeking general comments on the proposed rule, the Board specifically sought comments on a series of questions related to the impact of the proposed changes on consumers and credit unions. The comments were

intended to assist the Board in understanding what, if any, impact the proposed changes would have on credit unions that have expended resources investing in underserved areas. The Board is concerned that there is both financial and reputation risk if credit unions, previously authorized to operate in underserved areas, are prohibited from continuing to do so. The Board is also concerned that the proposed changes could limit the ability of credit unions to grow and expand services into underserved areas and provide needed financial assistance to consumers of modest means who do not currently have access to low cost financial services and undermine the viability of the federal credit union charter.

NCUA received 49 comment letters in response to the proposed rule: 31 from federal credit unions, one from a state-chartered credit union, 12 from credit union trade organizations, three from bank trade organizations, one from an individual, and one from an institute. Most credit union commenters opposed the proposal and support the status quo. One commenter believes the proposal contradicts congressional intent by only allowing multiple common-bond credit unions to add underserved areas. In contrast, some credit union commenters appreciated NCUA's concerns and supported the proposal. Whether opposed to or in favor of the proposal, most credit union commenters support a legislative solution amending the Federal Credit Union Act to expressly state that all federal credit unions may add underserved areas. Bank trade group commenters generally supported the proposal and, in some cases, recommended further requirements for credit unions serving underserved areas.

The NCUA Board asked for specific comments on the following five questions.

(1) NCUA's authority to permit expansions into underserved areas for all three federal charter types.

With the exception of the bank trade groups, almost all commenters expressed the opinion that NCUA has the authority to allow all three charter types to add underserved areas. Six commenters support the continuation of the moratorium and understand the basis for NCUA's proposal in this area given the current litigation. Almost all credit union commenters suggest that NCUA seek a statutory change to the Federal Credit Union Act in order to insert express language authorizing this activity.

Credit unions are leaders among financial institutions in providing affordable financial services to persons within their specific field of membership, including people of modest means. The Board is committed to assuring that credit unions have the regulatory tools necessary to perform this important role. One of the primary purposes of the Credit Union Membership Access Act (CUMAA) was to codify the legality of multiple common-bond credit unions. CUMAA also reflects Congress' intent to clarify that this new charter type was authorized to add underserved areas. Unfortunately, the statutory language does not expressly provide that authority to the other two charter types although there is legislative history that indicates Congress intended that all types of federal credit unions should be able to add underserved areas. This absence of specific statutory language, when considered together with the specific authorization for multiple common-bond credit unions, creates uncertainty about the continued authority of non-multiple common-bond credit unions to serve underserved areas. Though most commenters argued that the Board has the authority to authorize the other charter types to serve underserved areas, they provided no persuasive argument to address the issue created by the absence of any specific statutory language. In addition, recently the American Bankers Association and others have filed litigation challenging the authority of a non-multiple common-bond credit union to serve underserved areas in Utah.

In light of this uncertainty, the Board is amending its chartering policies to allow only multiple common-bond credit unions to serve underserved areas pending clarification of the language contained in the Federal Credit Union Act that authorizes the addition of underserved areas. The amendments to the chartering policy will apply only prospectively. The NCUA Board agrees a statutory change is necessary.

(2) The impact of limiting expansions into underserved areas to only multiple common-bond credit unions.

Several credit union commenters described the negative impact on both credit unions and consumers of limiting underserved expansions to multiple common bond credit unions. Commenters wrote that low-income individuals and those who most need credit union service will receive less service. A couple of commenters wrote that there will be less competition. One commenter said there will be a negative impact on the dual chartering system and that some federal credit unions will convert to state charters.

The Board agrees that restricting further expansions has the potential to limit the availability of credit union services to some consumers. Nevertheless, the Board has concluded that there are many opportunities for continued growth and expanded service to consumers within existing fields of membership, even with a change to chartering policies limiting prospective addition of underserved areas to multiple common-bond credit unions. The Board concludes that the ambiguity arising from the statute as well as the current litigation outweighs the potential harm to credit unions and potential members.

(3) Whether, if only multiple common bond credit unions are permitted to add underserved areas, they should be permitted to retain these areas in the event they change charter type.

Almost all credit union commenters who commented on this issue support permitting multiple common-bond credit unions to retain their underserved areas if they change charter types. The banking trade group commenters oppose credit unions retaining the areas.

Given that the final rule will not permit non-multiple common-bond credit unions to serve underserved areas, the Board concludes that, upon conversion to another charter type, the restrictions applicable to the new charter type must apply. Therefore, a multiple common-bond credit union converting to either a single common-bond or community charter would be required to give up its underserved areas. The credit union could continue to serve its existing members. This approach is faithful to the requirements of this final rule which prospectively permits only multiple common-bond credit unions to serve underserved areas. It is also consistent with the approach taken when a multiple common-bond credit union converts to a community credit union. In those circumstances, a credit union must comply with the requirements of the new charter type and relinquish its select employee groups.

The Board is aware that certain unpredictable factors, such as economic downturns and plant closings, could cause a multiple common-bond credit union to convert its charter type. While the loss of underserved areas in these circumstances may seem harsh, the Board concludes that the credit union must balance the potential impact of the loss with other factors relevant to a decision on its charter type. Part of the consideration regarding whether a charter change makes good business sense should necessarily include the fact that, once a multiple common-bond credit union changes its charter, it will lose its underserved areas.

(4) The type and extent of existing investment by non-multiple common bond credit unions in underserved areas including for example, capital investment, loans, share deposits, and other programs targeting low income people.

The Credit Union National Association, a credit union trade group, provided a comprehensive list of investments by non-multiple common-bond credit unions in underserved areas. Credit unions described investments in branch offices and ATMs, their involvement through loans, deposit products, services, and community involvement and charitable services in underserved areas. This information is discussed further in connection with question 5 below.

(5) The impact to members of underserved areas, and non-multiple common-bond credit unions, of restrictions on the addition of new members in underserved areas they are currently serving.

Almost all credit union commenters on this question believe the restrictions would have a negative impact. A few credit unions wrote they might have to close branches and would suffer economic loss. Several credit unions requested they be ''grandfathered'' so that they can continue to add new members from the underserved areas they currently serve.

The information provided establishes that many credit unions have invested significant funds, totaling in excess of 400 million dollars, and other resources into serving more than 800 underserved areas. This investment includes the establishment of hundreds of branches in and near underserved areas. Activity by credit unions in these areas indicates the significance of their services to their financial well being and the needs of their membership. It includes billions of dollars in loans and share deposits.

Generally, regulations are prospective in nature. *Bowen* v. *Georgetown Hospital,* 488 U.S. 204, 216 (1988) (Scalia, J., concurring). In considering the equities of applying a rule retroactively courts will consider such factors as the degree of hardship parties would experience, whether reliance on past regulation was justifiable and any statutory interest in retroactive application of the new rule. See, e.g., *Consolidated Freightways* v. *N.L.R.B.,* 892 F.2d 1052, 1058 (D.C. Cir. 1989) citing *Tennesee Gas Pipeline Co.* v. *FERC,* 606 F.2d 1094, 1115, 1116 n.77 (D.C. Cir. 1979), cert. denied, 445 U.S. 920 (1980).

Application of these principles to this rule demonstrate that the equities favor prospective application.

The comments received demonstrate that there has been significant financial investment by credit unions in reliance on NCUA's existing rule. These investments were made with the expectation that service would be available to all potential members in the underserved areas. Prohibiting the addition of new members would limit growth in these areas, expose the institutions to significant hardship through increased financial and reputation risk, and could cause safety and soundness concerns. Existing members would also suffer as a result of the diminished services that would result if further membership growth was prohibited.

It is also clear that reliance by credit unions on NCUA's regulation permitting these expansions was justified. NCUA has authorized all federal credit unions, regardless of charter type, to add underserved areas since 1994. Prior to the passage of the CUMAA in 1998 these areas were referred to as underserved communities.

With the passage of CUMAA, NCUA made significant changes to its chartering policies but again reiterated that all charter types were permitted to add underserved areas. In the preamble to the regulatory changes implementing CUMAA, the Board noted that the new legislation specifically authorized flexible policies regarding multiple common-bond credit unions providing service to underserved areas. At that time we also encouraged all credit unions to continue service to poor and disadvantaged areas and indicated that previous policy permitting all charter types to serve underserved areas would continue. IRPS 99–1, 63 FR 71998, 72016 (Dec. 30, 1998). Credit unions reasonably relied on these policy statements by this Board.

In short, investment by credit unions in underserved areas has occurred in reliance on long-standing NCUA policies that authorized and indeed encouraged such activity. Members in underserved areas have benefited from low cost financial services made available as a result of these efforts. They have become members in reliance upon NCUA policy that authorized credit union expansion into these areas. Credit unions that have invested in these areas have done so based on economic assumptions that included continued growth in membership. If continued growth is no longer possible, credit unions will be unable to sustain the current level of services provided in these areas. This could result in diminished or lost services to existing members.

On balance therefore, the Board concludes that the equities support only prospective application of this rule. Credit unions, regardless of charter type, that were serving underserved areas at the time the proposed rule was issued should be permitted to continue to serve those areas to include adding new members. To require them to do otherwise, given their reasonable reliance on NCUA's policy as well as their substantial investments, would cause substantial harm to the credit unions, their members, and potential members in the underserved area.

Regarding the service facility location, many commenters opposed NCUA's proposal to require a physical presence in the underserved area and recommend keeping the status quo. Some opposing commenters believe NCUA has the authority to require a credit union to locate a service facility in or near an underserved area. Some commenters believe the location of a branch is a business decision for the credit union to decide. Some commenters believe NCUA should focus on the level of service to the underserved area, not whether the branch is within the area, and one commenter noted that the Community Reinvestment Act does not require branches in an area and allows banks to provide service via ATMs and computers. Another commenter supported a specified distance from the underserved area to the service facility's location rather than requiring it to be in the underserved area.

A commenter wrote that the service facility should not have to be in an underserved area within two years if there is public transportation to the service facility or is an acceptable distance from the underserved area. The same commenter suggested the proposed definition of local community should be revised to be 50 miles for heavily populated urban areas and 200 miles for lightly populated rural areas. The commenter believes common interests and interaction should be removed as they are no longer valid or necessary due to credit reports.

Several commenters supported the service facility requirement as proposed, requiring a service facility be within the underserved area. A couple of commenters specifically mentioned that a physical presence ensures a credit union is serving the area.

A banking trade group commenter wrote that NCUA should require credit unions serving underserved areas to establish a service facility in that area within one year. Another banking trade group wrote that NCUA should require a credit union to establish the service

facility in the area upon approval of the expansion.

The NCUA Board finds that a service facility physically located in the underserved area assures better service to members in these locations. A credit union can build a better relationship and understanding of the needs of the community by having a physical presence in the area. By doing so the credit union will be better able to assess the needs of the underserved area and provide needed services to its members. NCUA believes requiring establishment of a service facility within two years of the credit union's addition of the area is reasonable and is retaining it. In addition, the Board has decided to retain as an option for an acceptable type of service facility within the underserved area, a credit union owned facility where shares are accepted for member accounts, loan applications are accepted, and loans are disbursed.

Regulatory Flexibility Act

The Regulatory Flexibility Act requires NCUA to prepare an analysis to describe any significant economic impact a regulation may have on a substantial number of small credit unions (primarily those under $10 million in assets). The final amendments will not have a significant economic impact on a substantial number of small credit unions and therefore, a regulatory flexibility analysis is not required.

Paperwork Reduction Act

The Office of Management and Budget control numbers assigned to Section 701.1 are 3133–0015 and 3133–0116. NCUA has determined that the amendments will not increase paperwork requirements and a paperwork reduction analysis is not required.

Executive Order 13132

Executive Order 13132 encourages independent regulatory agencies to consider the impact of their actions on state and local interests. In adherence to fundamental federalism principles, NCUA, an independent regulatory agency as defined in 44 U.S.C. 3502(5), voluntarily complies with the executive order. The final rule would not have substantial direct effects on the states, on the connection between the national government and the states, or on the distribution of power and responsibilities among the various levels of government. NCUA has determined that this rule does not constitute a policy that has federalism implications for purposes of the executive order.

The Treasury and General Government Appropriations Act, 1999—Assessment of Federal Regulations and Policies on Families

The NCUA has determined that this rule would not affect family well-being within the meaning of section 654 of the Treasury and General Government Appropriations Act of 1999, Pub. L. 105–277, 112 Stat. 2681 (1998).

Small Business Regulatory Enforcement Fairness Act

The Small Business Regulatory Enforcement Fairness Act of 1996 (Pub. L. 104–121) provides generally for congressional review of agency rules. A reporting requirement is triggered in instances where NCUA issues a final rule as defined by Section 551 of the Administrative Procedure Act. 5 U.S.C. 551. NCUA is recommending the Office of Management and Budget determined that this rule is not a major rule for purposes of the Small Business Regulatory Enforcement Fairness Act of 1996.

List of Subjects in 12 CFR Part 701

Credit, Credit unions, Reporting and recordkeeping requirements

By the National Credit Union Administration Board on June 22, 2006.

Mary Rupp,

Secretary of the Board.

■ For the reasons stated in the preamble, the National Credit Union Administration amends 12 CFR part 701 as follows:

PART 701—ORGANIZATION AND OPERATION OF FEDERAL CREDIT UNIONS

■ 1. The authority citation for part 701 continues to read as follows:

Authority: 12 U.S.C. 1752(5), 1755, 1756, 1757, 1759, 1761a, 1761b, 1766, 1767, 1782, 1784, 1787, 1789. Section 701.6 is also authorized by 15 U.S.C. 3717. Section 701.31 is also authorized by 15 U.S.C. 1601, *et seq.*, 42 U.S.C. 1981 and 3601–3610. Section 701.35 is also authorized by 12 U.S.C. 4311–4312.

■ 2. Section 701.1 is revised to read as follows:

§ 701.1 Federal credit union chartering, field of membership modifications, and conversions.

National Credit Union Administration policies concerning chartering, field of membership modifications, and conversions are set forth in Interpretive Ruling and Policy Statement 03–1, Chartering and Field of Membership Manual, as amended by IRPS 06–1, Copies may be obtained on NCUA's Web site, *http://www.ncua.gov*, or by contacting NCUA at the address found in Section 790.2(c) of this chapter.

(Approved by the Office of Management and Budget under control number 3133–0015 and 3133–0116.)

■ 3. IRPS 03–1, Chapter 3, Section III.A is revised to read as follows:

Note: The text of the IRPS 06–1 does not appear in the Code of Federal Regulations.

A multiple common-bond federal credit union may include in its field of membership, without regard to location, communities satisfying the definition of underserved areas in the Federal Credit Union Act. Adding an underserved area will not change the charter type of the multiple common-bond federal credit union. More than one multiple common-bond federal credit union can serve the same underserved area. The Federal Credit Union Act defines an underserved area as a local community, neighborhood, or rural district that is an ''investment area'' as defined in Section 103(16) of the Community Development Banking and Financial Institutions Act of 1994.

For an underserved area, the well-defined local community, neighborhood, or rural district requirement is met if:

- The area to be served is in a recognized single political jurisdiction, i.e., a city, county, or their political equivalent, or any contiguous portion thereof;
- The area to be served is in multiple contiguous political jurisdictions, i.e. a city, county, or their political equivalent, or any contiguous portion thereof and if the population of the requested well-defined area does not exceed 500,000; or
- The area to be served is a Metropolitan Statistical Area (MSA) or its equivalent, or a portion thereof, where the population of the MSA or its equivalent does not exceed 1,000,000.

If the area to be served does not meet the MSA or multiple political jurisdiction requirements outlined above, the application must include documentation to support that it is a well-defined local community, neighborhood, or rural district.

For an underserved area, an investment area includes any of the following, as reported in the most recently completed decennial census or equivalent government data:

- An area that wholly consists of or is wholly located within an Empowerment Zone or Enterprise Community designated under section 1391 of the Internal Revenue Code (26 U.S.C. 1391);

• An area where the percentage of the population living in poverty is at least 20 percent;

• An area in a Metropolitan Area where the median family income is at or below 80 percent of the Metropolitan Area median family income or the national Metropolitan Area median family income, whichever is greater;

• An area outside of a Metropolitan Area, where the median family income is at or below 80 percent of the statewide non-Metropolitan Area median family income or the national non-Metropolitan Area median family income, whichever is greater;

• An area where the unemployment rate is at least 1.5 times the national average;

• An area meeting the criteria for economic distress that may be established by the Community Development Financial Institutions Fund (CDFI) of the United States Department of the Treasury.

In addition, the local community, neighborhood, or rural district must be underserved, based on data considered by the NCUA Board and the Federal banking agencies.

Once an underserved area is added to a Federal credit union's field of membership, the credit union must establish and maintain an office or service facility in the community within two years. A service facility is defined as a place where shares are accepted for members' accounts, loan applications are accepted and loans are disbursed. This definition includes a credit union owned branch, a shared branch, a mobile branch, an office operated on a regularly scheduled weekly basis, or a credit union owned facility that meets, at a minimum, these requirements. This definition does not include an ATM or the credit union's Internet Web site.

The Federal credit union adding the underserved community must document that the community meets the definition for serving underserved areas in the Federal Credit Union Act. Adding an underserved community does not change the charter type of a multiple common-bond federal credit union. In order to receive the benefits afforded to low-income designated credit unions, such as expanded use of nonmember deposits and access to the Community Development Revolving Loan Program for Credit Unions, a credit union must receive low-income designation pursuant to 12 CFR 701.34.

A Federal credit union that desires to include an underserved community in its field of membership must first develop a business plan specifying how it will serve the community. The business plan, at a minimum, must identify the credit and depository needs of the community and detail how the credit union plans to serve those needs. The credit union will be expected to review the business plan regularly to determine if the community is being adequately served. The regional director may require periodic service status reports from a credit union about the underserved area to ensure that the needs of the community are being met as well as requiring such reports before NCUA allows a multiple common-bond Federal credit union to add an additional underserved area.

[FR Doc. E6–10134 Filed 6–27–06; 8:45 am]

BILLING CODE 7535–01–P

DEPARTMENT OF TRANSPORTATION

Federal Aviation Administration

14 CFR Part 39

[Docket No. FAA–2006–25175; Directorate Identifier 2006–NM–099–AD; Amendment 39–14670; AD 2006–13–17]

RIN 2120–AA64

Airworthiness Directives; Boeing Model 757–200 Series Airplanes Modified by Supplemental Type Certificate (STC) SA979NE

AGENCY: Federal Aviation Administration (FAA), Department of Transportation (DOT).

ACTION: Final rule; request for comments.

SUMMARY: The FAA is adopting a new airworthiness directive (AD) for certain Boeing Model 757–200 series airplanes. This AD requires a one-time deactivation of the auxiliary fuel system, repetitive venting and draining of the auxiliary fuel tank sumps, and revising the Limitations section of the airplane flight manual to limit the maximum cargo weight. This AD results from a re-evaluation of the floor structure and cargo barriers conducted by the STC holder. We are issuing this AD to prevent structural overload of the auxiliary fuel tank support structure, which could cause the floor beams to fail, damaging the primary flight controls and the auxiliary power unit fuel lines that pass through the floor beams, resulting in loss of control of the airplane. We are also issuing this AD to prevent structural overload of the cargo barriers, which could cause the barriers to fail, allowing the cargo to shift, resulting in damage to the auxiliary fuel tanks, residual fuel leakage, and consequent increased risk of a fire.

DATES: This AD becomes effective July 13, 2006.

The Director of the Federal Register approved the incorporation by reference of certain publications listed in the AD as of July 13, 2006.

We must receive comments on this AD by August 28, 2006.

ADDRESSES: Use one of the following addresses to submit comments on this AD.

• DOT Docket Web site: Go to *http://dms.dot.gov* and follow the instructions for sending your comments electronically.

• Government-wide rulemaking Web site: Go to *http://www.regulations.gov* and follow the instructions for sending your comments electronically.

• Mail: Docket Management Facility; U.S. Department of Transportation, 400 Seventh Street, SW., Nassif Building, Room PL–401, Washington, DC 20590.

• Fax: (202) 493–2251.

• Hand Delivery: Room PL–401 on the plaza level of the Nassif Building, 400 Seventh Street, SW., Washington, DC, between 9 a.m. and 5 p.m., Monday through Friday, except Federal holidays.

Contact PATS Aircraft, LLC, Product Support, 21652 Nanticoke Avenue, Georgetown, DE 19947, for service information identified in this AD.

FOR FURTHER INFORMATION CONTACT: Jon Hjelm, Aerospace Engineer, Airframe and Propulsion Branch, ANE–171, FAA, New York Aircraft Certification Office, 1600 Stewart Avenue, Suite 410, Westbury, New York 11590; telephone (516) 228–7323; fax (516) 794–5531.

SUPPLEMENTARY INFORMATION:

Discussion

PATS Aircraft (holder of Supplemental Type Certificate (STC) SA979NE) notified us that it has determined that Model 757–200 series airplanes equipped with auxiliary fuel tank systems installed by STC SA979NE have insufficient structural strength in the auxiliary fuel tank support structure. The STC holder has also determined that the cargo barriers have insufficient structural strength if subjected to emergency landing loads with more than 2,000 pounds of cargo in the cargo compartment. These determinations were based on a new structural analysis resulting from a re-evaluation of the floor structure and cargo barriers conducted by the STC holder. Structural overload of the auxiliary fuel tank support structure could cause the floor beams to fail, damaging the primary flight controls and the auxiliary power unit fuel lines that pass through the floor beams; this condition, if not corrected, could result in loss of control

of the airplane. Structural overload of the cargo barriers could cause the barriers to fail, allowing the cargo to shift; this condition, if not corrected, could result in damage to the auxiliary fuel tanks, residual fuel leakage, and consequent increased risk of a fire.

Relevant Service Information

We have reviewed PATS Aircraft Service Bulletin SA979NE–28–SB–28_IR, dated April 3, 2006. The service bulletin describes procedures for deactivating the auxiliary fuel system, and installing new cargo loading weight limits and ''INOP'' placards, depending on the airplane configuration. The service bulletin also describes procedures for venting any residual air pressure from the auxiliary fuel tanks following each flight and draining the auxiliary fuel tank sumps to regularly remove any residual fuel that may accumulate over time due to leakage around the auxiliary fuel tank valves. Paragraph I.D. (''Description'') of the service bulletin describes limiting the maximum cargo weight to 2,000 pounds (as specified on the new cargo weight placards) in the forward and aft cargo compartments, as applicable, depending on the STC configuration of the airplane.

We have also reviewed the PATS Aircraft supplements to the Limitations section of the Boeing 757–200 Airplane Flight Manual (AFM), which are identified in the following table. These AFM supplements provide revised maximum cargo weight limits.

TABLE.—APPLICABLE AFM SUPPLEMENTS FOR REVISED CARGO WEIGHT LIMITS

For airplanes having S/Ns—	Use PATS Aircraft AFM supplement—
29025, 29026, 29027, and 29028 (STC Configuration F, which has been upgraded to Configuration H)	142, dated May 31, 2006.
24923 (STC Configuration A)	143, dated May 31, 2006.
25155 and 25220 (STC Configuration C & D)	144, dated May 31, 2006.
28463 (STC Configuration E)	145, dated May 31, 2006.
22690 and 25487 (STC Configuration B & G)	146, dated May 31, 2006.

FAA's Determination and Requirements of This AD

The unsafe conditions described previously are likely to exist or develop on other airplanes of the same type design. We are issuing this AD to prevent structural overload of the auxiliary fuel tank support structure, which could cause the floor beams to fail, damaging the primary flight controls and the auxiliary power unit fuel lines that pass through the floor beams, resulting in loss of control of the airplane. We are also issuing this AD to prevent structural overload of the cargo barriers, which could cause the barriers to fail, allowing the cargo to shift, resulting in damage to the auxiliary fuel tanks, residual fuel leakage, and consequent increased risk of a fire. This AD requires accomplishing the actions specified in the service information described previously, except as discussed under ''Differences Between the AD and the Service Bulletin.''

Differences Between the AD and the Service Bulletin

PATS Aircraft Service Bulletin SA979NE–28–SB–28_IR, dated April 3, 2006, does not specify a compliance time for deactivating the auxiliary fuel system or implementing the new cargo weight limits. In developing an appropriate compliance time for those actions in this AD, we considered the degree of urgency associated with the subject unsafe condition, the average utilization of the affected fleet, and the time necessary to perform the deactivation (3 hours) and AFM revision. In light of all of these factors, we find that a 30-day compliance time represents an appropriate interval of time for affected airplanes to continue to operate without compromising safety.

Interim Action

We consider this AD interim action. The STC holder is currently developing a modification that will address the unsafe conditions identified in this AD. Once this modification is developed, approved, and available, we may consider additional rulemaking.

FAA's Determination of the Effective Date

Since unsafe conditions exists that require the immediate adoption of this AD, we have found that notice and opportunity for public comment before issuing this AD are impracticable, and that good cause exists to make this AD effective in less than 30 days.

Comments Invited

This AD is a final rule that involves requirements that affect flight safety and was not preceded by notice and an opportunity for public comment; however, we invite you to submit any relevant written data, views, or arguments regarding this AD. Send your comments to an address listed in the **ADDRESSES** section. Include ''Docket No. FAA–2006–25175; Directorate Identifier 2006–NM–099–AD'' at the beginning of your comments. We specifically invite comments on the overall regulatory, economic, environmental, and energy aspects of the AD that might suggest a need to modify it.

We will post all comments we receive, without change, to *http://dms.dot.gov*, including any personal information you provide. We will also post a report summarizing each substantive verbal contact with FAA personnel concerning this AD. Using the search function of that Web site, anyone can find and read the comments in any of our dockets, including the name of the individual who sent the comment (or signed the comment on behalf of an association, business, labor union, etc.). You may review the DOT's complete Privacy Act Statement in the **Federal Register** published on April 11, 2000 (65 FR 19477–78), or you may visit *http://dms.dot.gov*.

Examining the Docket

You may examine the AD docket on the Internet at *http://dms.dot.gov*, or in person at the Docket Management Facility office between 9 a.m. and 5 p.m., Monday through Friday, except Federal holidays. The Docket Management Facility office (telephone (800) 647–5227) is located on the plaza level of the Nassif Building at the DOT street address stated in the **ADDRESSES** section. Comments will be available in the AD docket shortly after the Docket Management System receives them.

Authority for This Rulemaking

Title 49 of the United States Code specifies the FAA's authority to issue rules on aviation safety. Subtitle I, section 106, describes the authority of the FAA Administrator. Subtitle VII, Aviation Programs, describes in more detail the scope of the Agency's authority.

We are issuing this rulemaking under the authority described in subtitle VII,

part A, subpart III, section 44701, ''General requirements.'' Under that section, Congress charges the FAA with promoting safe flight of civil aircraft in air commerce by prescribing regulations for practices, methods, and procedures the Administrator finds necessary for safety in air commerce. This regulation is within the scope of that authority because it addresses unsafe conditions that are likely to exist or develop on products identified in this rulemaking action.

Regulatory Findings

We have determined that this AD will not have federalism implications under Executive Order 13132. This AD will not have a substantial direct effect on the States, on the relationship between the National government and the States, or on the distribution of power and responsibilities among the various levels of government.

For the reasons discussed above, I certify that the regulation:

1. Is not a ''significant regulatory action'' under Executive Order 12866;

2. Is not a ''significant rule'' under the DOT Regulatory Policies and Procedures (44 FR 11034, February 26, 1979); and

3. Will not have a significant economic impact, positive or negative, on a substantial number of small entities under the criteria of the Regulatory Flexibility Act.

We prepared a regulatory evaluation of the estimated costs to comply with this AD and placed it in the AD docket. See the **ADDRESSES** section for a location to examine the regulatory evaluation.

List of Subjects in 14 CFR Part 39

Air transportation, Aircraft, Aviation safety, Incorporation by reference, Safety.

Adoption of the Amendment

■ Accordingly, under the authority delegated to me by the Administrator, the FAA amends 14 CFR part 39 as follows:

PART 39—AIRWORTHINESS DIRECTIVES

■ 1. The authority citation for part 39 continues to read as follows:

Authority: 49 U.S.C. 106(g), 40113, 44701.

§ 39.13 [Amended]

■ 2. The Federal Aviation Administration (FAA) amends § 39.13 by adding the following new airworthiness directive (AD):

2006–13–17 PATS Inc.: Amendment 39–14670. Docket No. FAA–2006–25175; Directorate Identifier 2006–NM–099–AD.

Effective Date

(a) This AD becomes effective July 13, 2006.

Affected ADs

(b) None.

Applicability

(c) This AD applies to Boeing Model 757–200 series airplanes, certificated in any category; modified by Supplemental Type Certificate (STC) SA979NE, having serial numbers identified in PATS Aircraft Service Bulletin SA979NE–28–SB–28_IR, dated April 3, 2006.

Unsafe Condition

(d) This AD results from a re-evaluation of the floor structure and cargo barriers conducted by the STC holder. We are issuing this AD to prevent structural overload of the auxiliary fuel tank support structure, which could cause the floor beams to fail, damaging the primary flight controls and the auxiliary power unit fuel lines that pass through the floor beams, resulting in loss of control of the airplane. We are also issuing this AD to prevent structural overload of the cargo barriers, which could cause the barriers to fail, allowing the cargo to shift, resulting in damage to the auxiliary fuel tanks, residual fuel leakage, and consequent increased risk of a fire.

Compliance

(e) You are responsible for having the actions required by this AD performed within the compliance times specified, unless the actions have already been done.

Service Bulletin References

(f) The term ''service bulletin,'' as used in this AD, means the Accomplishment Instructions and Maintenance Requirements of PATS Aircraft Service Bulletin SA979NE–28–SB–28–IR, dated April 3, 2006.

Deactivation of the Auxiliary Fuel System and Revised Cargo Weight Limits

(g) Within 30 days after the effective date of this AD: Do the actions in paragraphs (g)(1) and (g)(2) of this AD. Thereafter, do the actions in paragraphs (h) and (i) of this AD at the times specified in those paragraphs.

(1) Deactivate the auxiliary fuel system by doing all of the actions specified in Part III and all of the actions for the applicable airplane configuration specified in Part IV of the service bulletin.

(2) Revise the Limitations section of the Boeing 757–200 Airplane Flight Manual (AFM) to include revised maximum cargo weight limits specified in the applicable AFM supplement identified in Table 1 of this AD. Operate the airplane according to the limitations in the AFM supplements.

TABLE 1.—APPLICABLE AFM SUPPLEMENTS FOR REVISED CARGO WEIGHT LIMITS

For airplanes having S/Ns—	Use PATS Aircraft AFM supplement—
29025, 29026, 29027, and 29028 (STC Configuration F, which has been upgraded to Configuration H)	142, dated May 31, 2006.
24923 (STC Configuration A)	143, dated May 31, 2006.
25155 and 25220 (STC Configuration C & D)	144, dated May 31, 2006.
28463 (STC Configuration E)	145, dated May 31, 2006.
22690 and 25487 (STC Configuration B & G)	146, dated May 31, 2006.

Repetitive Venting of the Built-Up Pressure in the Auxiliary Fuel Tanks

(h) After deactivating the auxiliary fuel system as specified in paragraph (g) of this AD: Following each flight, vent the auxiliary fuel tanks by doing all of the actions specified in paragraph A. of Part V of the service bulletin.

Repetitive Draining of the Fuel Tank Sumps for Residual Fuel

(i) At intervals not to exceed 100 flight cycles following deactivation of the auxiliary fuel system, as specified in paragraph (g) of this AD: Drain the auxiliary fuel tank sumps to remove any built-up residual fuel by doing all of the actions specified in paragraph B. of Part V of the service bulletin.

Special Flight Permits

(j) Special flight permits may be issued in accordance with sections 21.197 and 21.199 of the Federal Aviation Regulations (14 CFR 21.197 and 21.199) to operate the airplane to a location where the airplane can be modified, provided the airplane is operated with the auxiliary fuel tanks empty.

Alternative Methods of Compliance (AMOCs)

(k)(1) The Manager, New York Aircraft Certification Office (ACO), FAA, has the authority to approve AMOCs for this AD, if requested in accordance with the procedures found in 14 CFR 39.19.

(2) Before using any AMOC approved in accordance with § 39.19 on any airplane to which the AMOC applies, notify the appropriate principal inspector in the FAA Flight Standards Certificate Holding District Office.

Material Incorporated by Reference

(l) You must use PATS Aircraft Service Bulletin SA979NE–28–SB–28_IR, dated April 3, 2006, and the applicable PATS Aircraft supplement to the Boeing 757–200 Airplane Flight Manual identified in Table 2 of this AD, as applicable, to perform the actions that are required by this AD, unless the AD specifies otherwise.

TABLE 2.—AIRPLANE FLIGHT MANUAL SUPPLEMENTS FOR INCORPORATION BY REFERENCE

PATS Aircraft airplane flight manual supplement—	Dated—
142	May 31, 2006.
143	May 31, 2006.
144	May 31, 2006.
145	May 31, 2006.
146	May 31, 2006.

The Director of the Federal Register approved the incorporation by reference of these documents in accordance with 5 U.S.C. 552(a) and 1 CFR part 51. Contact PATS Aircraft, LLC, Product Support, 21652 Nanticoke Avenue, Georgetown, DE 19947, for a copy of this service information. You may review copies at the Docket Management Facility, U.S. Department of Transportation, 400 Seventh Street, SW., Room PL–401, Nassif Building, Washington, DC; on the Internet at *http://dms.dot.gov;* or at the National Archives and Records Administration (NARA). For information on the availability of this material at the NARA, call (202) 741–6030, or go to *http://www.archives.gov/federal_register/code_of_federal_regulations/ibr_locations.html.*

Issued in Renton, Washington, on June 15, 2006.

Ali Bahrami,

Manager, Transport Airplane Directorate, Aircraft Certification Service.

[FR Doc. 06–5702 Filed 6–27–06; 8:45 am]

BILLING CODE 4910–13–P

DEPARTMENT OF TRANSPORTATION

Federal Aviation Administration

14 CFR Part 39

[Docket No. FAA–2006–23890; Directorate Identifier 2005–NM–229–AD; Amendment 39–14633; AD 2006–12–08]

RIN 2120–AA64

Airworthiness Directives; Goodrich Evacuation Systems Approved Under Technical Standard Order (TSO) TSO–C69b and Installed on Airbus Model A330–200 and –300 Series Airplanes, Model A340–200 and –300 Series Airplanes, and Model A340–541 and –642 Airplanes

AGENCY: Federal Aviation Administration (FAA), Department of Transportation (DOT).

ACTION: Final rule; correction.

SUMMARY: The FAA is correcting an inadvertent error in an existing airworthiness directive (AD) that was published in the **Federal Register** on June 12, 2006 (71 FR 33606). The error resulted in an incorrect reference to the airplane manufacturer instead of the TSO holder. This AD applies to Goodrich evacuation systems approved under TSO–C69b and installed on certain Airbus Model A330–200 and –300 series airplanes, Model A340–200 and –300 series airplanes, and Model A340–541 and –642 airplanes. This AD requires inspecting to determine the part number of the pressure relief valves on the affected Goodrich evacuation systems, and corrective action if necessary.

DATES: Effective July 17, 2006.

ADDRESSES: The AD docket contains the proposed AD, comments, and any final disposition. You may examine the AD docket on the Internet at *http://dms.dot.gov,* or in person at the Docket Management Facility office between 9 a.m. and 5 p.m., Monday through Friday, except Federal holidays. The Docket Management Facility office (telephone (800) 647–5227) is located on the plaza level of the Nassif Building at the U.S. Department of Transportation, 400 Seventh Street, SW., Room PL–401, Washington, DC. This docket number is FAA–2006–23890; the directorate identifier for this docket is 2005–NM–229–AD.

FOR FURTHER INFORMATION CONTACT: Tracy Ton, Aerospace Engineer, Cabin Safety/Mechanical and Environmental Systems Branch, ANM–150L, FAA, Los Angeles Aircraft Certification Office, 3960 Paramount Boulevard, Lakewood, California 90712–4137; telephone (562) 627–5352; fax (562) 627–5210.

SUPPLEMENTARY INFORMATION: On May 31, 2006, the FAA issued AD 2006–12–08, amendment 39–14633 (71 FR 33606, June 12, 2006), for Goodrich evacuation systems approved under TSO–C69b and installed on certain Airbus Model A330–200 and –300 series airplanes, Model A340–200 and –300 series airplanes, and Model A340–541 and –642 airplanes. The AD requires inspecting to determine the part number of the pressure relief valves on the affected Goodrich evacuation systems, and corrective action if necessary.

As published, the final rule identifies an incorrect reference to the airplane manufacturer (Airbus) in the regulatory text of the AD. The correct reference is Goodrich (formerly BF Goodrich).

No other part of the regulatory information has been changed; therefore, the final rule is not republished in the **Federal Register**.

The effective date of this AD remains July 17, 2006.

§ 39.13 [Corrected]

■ In the **Federal Register** of June 12, 2006, on page 33607, in the second column, paragraph 2 of PART 39—AIRWORTHINESS DIRECTIVES of AD 2006–12–08 is corrected to read as follows:

* * * * *

■ 2. The Federal Aviation Administration (FAA) amends § 39.13 by adding the following new airworthiness directive (AD):

2006–12–08 Goodrich (Formerly BF Goodrich): Amendment 39–14633. Docket No. FAA–2006–23890; Directorate Identifier 2005–NM–229–AD.

* * * * *

Issued in Renton, Washington, on June 20, 2006.

Kalene C. Yanamura,

Acting Manager, Transport Airplane Directorate, Aircraft Certification Service.

[FR Doc. 06–5739 Filed 6–27–06; 8:45 am]

BILLING CODE 4910–13–P

DEPARTMENT OF TRANSPORTATION

Federal Aviation Administration

14 CFR Part 97

[Docket No. 30500 Amdt. No. 3172]

Standard Instrument Approach Procedures, Weather Takeoff Minimums; Miscellaneous Amendments

AGENCY: Federal Aviation Administration (FAA), DOT.

ACTION: Final rule.

SUMMARY: This amendment establishes, amends, suspends, or revokes Standard Instrument Approach Procedures (SIAPs) and/or Weather Takeoff Minimums for operations at certain airports. These regulatory actions are needed because of the adoption of new or revised criteria, or because of changes occurring in the National Airspace System, such as the commissioning of new navigational facilities, addition of new obstacles, or changes in air traffic requirements. These changes are designed to provide safe and efficient use of the navigable airspace and to promote safe flight operations under instrument flight rules at the affected airports.

DATES: This rule is effective June 28, 2006. The compliance date for each SIAP and/or Weather Takeoff Minimums is specified in the amendatory provisions.

The incorporation by reference of certain publications listed in the regulations is approved by the Director of the Federal Register as of June 28, 2006.

ADDRESSES: Availability of matters incorporated by reference in the amendment is as follows:

For Examination—

1. FAA Rules Docket, FAA Headquarters Building, 800 Independence Avenue, SW., Washington, DC 20591;
2. The FAA Regional Office of the region in which the affected airport is located;
3. The National Flight Procedures Office, 6500 South MacArthur Blvd., Oklahoma City, OK 73169 or,
4. The National Archives and Records Administration (NARA). For information on the availability of this material at NARA, call 202–741–6030, or go to: *http://www.archives.gov/federal_register/code_of_federal_regulations/ibr_locations.html.*

For Purchase—

Individual SIAP and Weather Takeoff Minimums copies may be obtained from:

1. FAA Public Inquiry Center (APA–200), FAA Headquarters Building, 800 Independence Avenue, SW., Washington, DC 20591; or
2. The FAA Regional Office of the region in which the affected airport is located.

By Subscription—Copies of all SIAPs and Weather Takeoff Minimums mailed once every 2 weeks, are for sale by the Superintendent of Documents, U.S. Government Printing Office, Washington, DC 20402.

FOR FURTHER INFORMATION CONTACT: Donald P. Pate, Flight Procedure Standards Branch (AFS–420), Flight Technologies and Programs Division, Flight Standards Service, Federal Aviation Administration, Mike Monroney Aeronautical Center, 6500 South MacArthur Blvd., Oklahoma City, OK 73169 (Mail Address: P.O. Box 25082, Oklahoma City, OK 73125), telephone: (405) 954–4164.

SUPPLEMENTARY INFORMATION: This amendment to Title 14 of the Code of Federal Regulations, Part 97 (14 CFR part 97), establishes, amends, suspends, or revokes SIAPs and/or Weather Takeoff Minimums. The complete regulatory description of each SIAP and/or Weather Takeoff Minimums is contained in official FAA form documents which are incorporated by reference in this amendment under 5 U.S.C. 552(a), 1 CFR part 51, and 14 CFR part 97.20. The applicable FAA Forms are identified as FAA Forms 8260–3, 8260–4, 8260–5 and 8260–15A. Materials incorporated by reference are available for examination or purchase as stated above.

The large number of SIAPs and/or Weather Takeoff Minimums, their complex nature, and the need for a special format make their verbatim publication in the **Federal Register** expensive and impractical. Further, airmen do not use the regulatory text of the SIAPs and/or Weather Takeoff Minimums but refer to their depiction on charts printed by publishers of aeronautical materials. Thus, the advantages of incorporation by reference are realized and publication of the complete description of each SIAP and/or Weather Takeoff Minimums contained in FAA form documents is unnecessary. The provisions of this amendment state the affected CFR sections, with the types and effective dates of the SIAPs and/or Weather Takeoff Minimums. This amendment also identifies the airport, its location, the procedure identification and the amendment number.

The Rule

This amendment to 14 CFR part 97 is effective upon publication of each separate SIAP and/or Weather Takeoff Minimums as contained in the transmittal. Some SIAP and/or Weather Takeoff Minimums amendments may have been previously issued by the FAA in a Flight Data Center (FDC) Notice to Airmen (NOTAM) as an emergency action of immediate flight safety relating directly to published aeronautical charts. The circumstances which created the need for some SIAP, and/or Weather Takeoff Minimums amendments may require making them effective in less than 30 days. For the remaining SIAPs and/or Weather Takeoff Minimums, an effective date at least 30 days after publication is provided.

Further, the SIAPs and/or Weather Takeoff Minimums contained in this amendment are based on the criteria contained in the U.S. Standard for Terminal Instrument Procedures (TERPS). In developing these SIAPs and/or Weather Takeoff Minimums, the TERPS criteria were applied to the conditions existing or anticipated at the affected airports. Because of the close and immediate relationship between these SIAPs and/or Weather Takeoff Minimums and safety in air commerce, I find that notice and public procedure before adopting these SIAPs and/or Weather Takeoff Minimums are impracticable and contrary to the public interest and, where applicable, that good cause exists for making some SIAPs and/or Weather Takeoff Minimums effective in less than 30 days.

Conclusion

The FAA has determined that this regulation only involves an established body of technical regulations for which frequent and routine amendments are necessary to keep them operationally current. It, therefore—(1) is not a ''significant regulatory action'' under Executive Order 12866; (2) is not a ''significant rule'' under DOT Regulatory Policies and Procedures (44 FR 11034; February 26, 1979); and (3) does not warrant preparation of a regulatory evaluation as the anticipated impact is so minimal. For the same reason, the FAA certifies that this amendment will not have a significant economic impact on a substantial number of small entities under the criteria of the Regulatory Flexibility Act.

List of Subjects in 14 CFR Part 97

Air Traffic Control, Airports, Incorporation by reference, and Navigation (Air).

Issued in Washington, DC on June 20, 2006.

James J. Ballough,

Director, Flight Standards Service.

Adoption of the Amendment

■ Accordingly, pursuant to the authority delegated to me, under Title 14, Code of Federal Regulations, Part 97 (14 CFR part 97) is amended by establishing, amending, suspending, or revoking Standard Instrument Approach Procedures and Weather Takeoff

Minimums effective at 0901 UTC on the dates specified, as follows:

PART 97—STANDARD INSTRUMENT APPROACH PROCEDURES

■ 1. The authority citation for part 97 continues to read as follows:

Authority: 49 U.S.C. 106(g), 40103, 40106, 40113, 40114, 40120, 44502, 44514, 44701, 44719, 44721–44722.

■ 2. Part 97 is amended to read as follows:

** * * Effective 03 August 2006*

Bessemer, AL, Bessemer, NDB RWY 5, Amdt 3, CANCELLED
Fairhope, AL, H L Sonny Callahan, RNAV (GPS) RWY 1, Orig
Fairhope, AL, H L Sonny Callahan, RNAV (GPS) RWY 19, Orig
Fairhope, AL, H L Sonny Callahan, GPS RWY 1, Orig, CANCELLED
Fairhope, AL, H L Sonny Callahan, VOR/DME–A, Amdt 5
Fairhope, AL, H L Sonny Callahan, Takeoff Minimums and Textual DP, Orig
Texarkana, AR, Texarkana Regional-Webb Field, VOR RWY 13, Amdt 16
Texarkana, AR, Texarkana Regional-Webb Field, RNAV (GPS) RWY 4, Orig
Texarkana, AR, Texarkana Regional-Webb Field, RNAV (GPS) RWY 13, Orig
Texarkana, AR, Texarkana Regional-Webb Field, RNAV (GPS) RWY 22, Orig
Texarkana, AR, Texarkana Regional-Webb Field, RNAV (GPS) RWY 31, Orig
Texarkana, AR, Texarkana Regional-Webb Field, GPS RWY 4, Orig-A, CANCELLED
Texarkana, AR, Texarkana Regional-Webb Field, GPS RWY 22, Orig-A, CANCELLED
Texarkana, AR, Texarkana Regional-Webb Field, GPS RWY 31, Orig-A, CANCELLED
Tucson, AZ, Tucson Intl, ILS OR LOC RWY 11L, Amdt 13
Tucson, AZ, Tucson Intl, RNAV (RNP) Y RWY 11L, Orig
Tucson, AZ, Tucson Intl, RNAV (GPS) Z RWY 11L, Amdt 1
Tucson, AZ, Tucson Intl, RNAV (RNP) Y RWY 29R, Orig
Tucson, AZ, Tucson Intl, RNAV (GPS) Z RWY 29R, Amdt 2
Oxnard, CA, Oxnard, LOC RWY 25, Orig
Oxnard, CA, Oxnard, ILS RWY 25, Amdt 11
Pueblo, CO, Pueblo Memorial, RNAV (GPS) RWY 26R, Orig
Pueblo, CO, Pueblo Memorial, GPS RWY 26R, Orig, CANCELLED
Fort Myers, FL, Southwest Florida Intl, NDB RWY 5, Orig
Fort Myers, FL, Southwest Florida Intl, VOR/DME OR TACAN RWY 23, Orig
Gary, IN, Gary/Chicago Intl, RNAV (RNP) RWY 12, Orig
Oakley, KS, Oakley Muni, NDB RWY 34, Amdt 3
Oakley, KS, Oakley Muni, RNAV (GPS) RWY 34, Orig
Oakley, KS, Oakley Muni, Takeoff Minimums and Textual DP, Orig
Saginaw, MI, Saginaw County H.W. Browne, ILS OR LOC/DME RWY 27, Orig
St. Louis, MO, Lambert-St. Louis Intl, ILS OR LOC RWY 29, Amdt 1
St. Louis, MO, Lambert-St. Louis Intl, ILS PRM RWY 29, Amdt 1 (Simultaneous Close Parallel)
St. Louis, MO, Lambert-St. Louis Intl, ILS OR LOC RWY 30R, ILS RWY 30R (CAT II); ILS RWY 30R (CAT III), Amdt 9
St. Louis, MO, Lambert-St. Louis Intl, ILS PRM RWY 30R, ILS PRM RWY 30R (CAT II), ILS PRM RWY 30R (CAT III), Amdt 1 (Simultaneous Close Parallel)
St. Louis, MO, Lambert-St. Louis Intl, LDA PRM RWY 30L, Amdt 1 (Simultaneous Close Parallel)
St. Louis, MO, Lambert-St. Louis Intl, RNAV (GPS) RWY 29, Orig
St. Louis, MO, Lambert-St. Louis Intl, RNAV (GPS) RWY 30R, Amdt 1
St. Louis, MO, Lambert-St. Louis Intl, LDA/DME RWY 30L, Amdt 1
Kalispell, MT, Glacier Park Intl, RNAV (GPS) RWY 2, Amdt 1
Kalispell, MT, Glacier Park Intl, VOR/DME RWY 30, Amdt 10
Kalispell, MT, Glacier Park Intl, Takeoff Minimums and Textual DP, Amdt 3
Grand Forks, ND, Grand Forks Intl, RNAV (GPS) RWY 17R, Orig
Grand Forks, ND, Grand Forks Intl, RNAV (GPS) RWY 26, Orig
Grand Forks, ND, Grand Forks Intl, RNAV (GPS) RWY 35L, Orig
Grand Forks, ND, Grand Forks Intl, ILS OR LOC RWY 35L, Amdt 12
Grand Forks, ND, Grand Forks Intl, VOR RWY 17R, Amdt 6
Grand Forks, ND, Grand Forks Intl, VOR RWY 35L, Amdt 7
Grand Forks, ND, Grand Forks Intl, GPS RWY 26, Orig-B, CANCELLED
Grand Forks, ND, Grand Forks Intl, Takeoff Minimums and Textual DP, Amdt 1
Scottsbluff, NE, Western Neb. Rgnl/William B. Heilig Field, LOC/DME RWY 12, Orig
Klamath Falls, OR, Klamath Falls, RNAV (GPS) RWY 14, Orig
Klamath Falls, OR, Klamath Falls, VOR/DME OR TACAN RWY 14, Amdt 4
Walla Walla, WA, Walla Walla Regional, ILS OR LOC RWY 20, Amdt 8

** * * Effective 28 September 2006*

Fort Lauderdale, FL, Fort Lauderdale/Hollywood Intl, RNAV (GPS) RWY 31, Amdt 1
Orlando, FL, Kissimmee Gateway, RNAV (GPS) RWY 33, Orig
Orlando, FL, Kissimmee Gateway, GPS RWY 33, Orig-B, CANCELLED

The FAA published an Amendment in Docket No. 30498, Amdt No. 3170 to Part 97 of the Federal Aviation Regulations (Vol. 71, FR No. 114, Page 34247; dated Wednesday, June 14, 2006) under section 97.27 effective 28 September 2006, which is hereby RESCINDED as follows:

Kelso, WA, Kelso-Longview, NDB OR GPS–A, Amdt 5C, CANCELLED

[FR Doc. 06–5670 Filed 6–27–06; 8:45 am]

BILLING CODE 4910–13–P

DEPARTMENT OF THE TREASURY

Internal Revenue Service

26 CFR Part 1

[TD 9269]

RIN 1545–BC00

Distributions of Interests in a Loss Corporation From Qualified Trusts

AGENCY: Internal Revenue Service (IRS), Treasury.

ACTION: Final regulations and removal of temporary regulations.

SUMMARY: This document contains final regulations under section 382 of the Internal Revenue Code of 1986. The final regulations affect loss corporations and provide guidance on whether a loss corporation has an owner shift where a qualified trust described in section 401(a) distributes an ownership interest in an entity.

DATES: *Effective Date:* These regulations are effective June 23, 2006.

Applicability Dates: For dates of applicability see § 1.382–10(a)(4).

FOR FURTHER INFORMATION CONTACT: Keith E. Stanley, (202) 622–7750, (not a toll-free number).

SUPPLEMENTARY INFORMATION:

Background

This document contains amendments to 26 CFR part 1. On June 27, 2003, temporary regulations (TD 9063; 68 FR 38177) regarding whether a loss corporation has an owner shift where a qualified trust described in section 401(a) distributes an ownership interest in an entity were published in the **Federal Register**. A notice of proposed rule making (REG–108676–03) cross-referencing the temporary regulations was published in the **Federal Register** for the same day (68 FR 38247). The temporary regulations provided that—(1) if a qualified trust distributes an ownership interest in an entity, then for testing dates on or after the date of the distribution, the distributed ownership interest will be treated as having been acquired by the distributee on the date and in the manner acquired by the trust, and (2) the distribution itself does not give rise to a testing date. They further provided that, in determining which ownership interests have been distributed, the loss corporation must account for all dispositions of ownership interests by the qualified trust either by specifically identifying the ownership interest disposed of, or by using a first-in, first-out (FIFO) method.

The preamble of TD 9063 included background information and an explanation of provisions regarding the regulations. Also in the preamble, the IRS and Treasury Department requested comments regarding whether there are other events that, under current rules, are taken into account in determining whether an ownership change occurs, but do not cause the ultimate beneficial ownership of the loss corporation to change. In this regard, the IRS and Treasury Department indicated that they had been studying the constructive ownership rules as they apply to members of a family and the effect of those rules on the determination of whether a loss corporation has an ownership change. The IRS and Treasury Department expressed concern that, under the current rules, a change in the composition of a family might be interpreted in certain circumstances as shifting ownership even though there has been no change in the ultimate beneficial ownership of the loss corporation, as, for example, might occur when two individuals owning loss corporation stock get married.

The IRS and Treasury Department further indicated that they were considering the promulgation of regulations to address such changes in family composition in a manner similar to that employed in the proposed regulations concerning qualified trusts. The IRS and Treasury Department will continue to study whether to issue regulations under section 382 concerning shifts in ownership resulting from certain changes in family composition.

No comments were received responding to the notice of proposed rulemaking, and no public hearing was requested or held. The proposed regulations are adopted with no substantive change by this Treasury decision, and the corresponding temporary regulations are removed.

Special Analyses

It has been determined that this regulation is not a significant regulatory action as defined in Executive Order 12866. Therefore, a regulatory assessment is not required. Pursuant to 5 U.S.C. 553(d)(3), it has been determined that good cause exists to dispense with a delayed effective date on grounds that this regulation, which is substantively identical to currently effective temporary regulations and relieves a restriction on affected qualified trusts, merely continues to provide necessary guidance to taxpayers with respect to whether a loss corporation has an ownership change where a qualified trust described in section 401(a) distributes an ownership interest in an entity. It is hereby certified that these regulations will not have a significant economic impact on a substantial number of small entities. This certification is based on the fact that the regulations provide relief to qualifying loss corporations that might be affected by an unintended consequence of the operation of the statute. Therefore, a Regulatory Flexibility Analysis under the Regulatory Flexibility Act (5 U.S.C. chapter 6) is not required. Pursuant to section 7805(f) of the Code, the notice of proposed rulemaking preceding these final regulations was submitted to the Chief Counsel for Advocacy of the Small Business Administration for comment on its impact on small business.

Drafting Information

The principal author of these regulations is Keith E. Stanley of the Office of Associate Chief Counsel (Corporate). Other personnel from the IRS and Treasury Department participated in their development.

List of Subjects in 26 CFR Part 1

Income taxes, Reporting and recordkeeping requirements.

Adoption of Amendments to the Regulations

■ Accordingly, 26 CFR part 1 is amended as follows:

PART 1—INCOME TAXES

■ **Paragraph 1.** The authority citation for part 1 is amended by adding entries in numerical order to read, in part, as follows:

Authority: 26 U.S.C. 7805 * * *.

Section 1.382–10 also issued under 26 U.S.C 382(m). * * *

■ **Par. 2.** Section 1.382–1 is amended by removing the entry for § 1.382–10T and revising the entry for § 1.382–10 to read as follows:

§ 1.382–1 Table of contents.

* * * * *

§ 1.382–10 Special rules for determining time and manner of acquisition of an interest in a loss corporation.

* * * * *

■ **Par. 3.** Section 1.382–10 is added to read as follows:

§ 1.382–10 Special rules for determining time and manner of acquisition of an interest in a loss corporation.

(a) *Distributions from qualified trusts*—(1) *In general.* For purposes of § 1.382–2T, if a qualified trust described in section 401(a) (qualified trust) distributes an ownership interest in an entity (as defined in § 1.382–3(a)(1)), then for testing dates on or after the date of the distribution, the distributed ownership interest is treated as having been acquired by the distributee on the date and in the manner acquired by the trust and not as having been acquired or disposed of by the trust. The distribution does not cause the day of the distribution to be a testing date.

(2) *Accounting for dispositions*—(i) *General rule.* For purposes of this paragraph (a), in order to determine which ownership interest in an entity is distributed from a qualified trust, a loss corporation must either specifically identify the ownership interests that are the subject of all dispositions by the qualified trust of ownership interests in an entity, or apply the first-in, first-out (FIFO) method to all such dispositions.

(ii) *Special rules.* For purposes of this paragraph (a)(2):

(A) The FIFO method must be applied on a class-by-class basis; and

(B) The term *dispositions* includes distributions, sales, and other transfers.

(3) *Examples.* The following examples illustrate the principles of this paragraph (a). For purposes of these examples, unless otherwise stated, the nomenclature and assumptions of the examples in § 1.382–2T(b) apply, all corporations file separate income tax returns on a calendar year basis, the only 5-percent shareholder of a loss corporation is a public group, and the facts set forth the only acquisitions of stock by any participants in a qualified plan and the only owner shifts with respect to the loss corporation during the testing period. The examples are as follows:

Example 1—(i) Facts. In 1994, E, a qualified trust established under Plan F, acquires 10 percent of L stock. A is a participant in Plan F. On January 1, 2002, A acquires 4 percent of L stock, and B, who is not a participant or a beneficiary of a participant in Plan F, acquires 5 percent of L stock. On January 1, 2004, E distributes 2 percent of L stock to A. On July 1, 2004, A acquires 1 percent of L stock. (ii) *Analysis.* January 1, 2002, is a testing date because B's acquisition of 5 percent of L stock causes an increase in the percentage ownership of B, a 5-percent shareholder. As of the close of that testing date, A is treated as owning only 4 percent of L stock. Therefore, A is treated as a member of the public group of L. In addition, E is treated as owning 10 percent of L stock that it acquired in 1994.

(iii) As a result of the application of paragraph (a)(1) of this section to E's distribution of 2 percent of L stock to A on January 1, 2004, for testing dates on and after January 1, 2004, A is treated as having acquired that 2 percent interest in L in 1994, and E is treated as having acquired only 8 percent of L stock in 1994. Because there are

no owner shifts on January 1, 2004, that date is not a testing date.

(iv) July 1, 2004, is a testing date because on that date A, a 5-percent shareholder, acquires 1 percent of L stock. As of the close of that testing date, A's percentage of ownership of L stock is 7 percent, and A's lowest percentage of ownership of L stock at any time within the testing period is 2 percent (deemed acquired in 1994), representing an increase of 5 percentage points. In addition, as of the close of July 1, 2004, B's percentage of ownership of L stock is 5 percent, and B's lowest percentage of ownership of L stock at any time within the testing period is 0 percent, representing an increase of 5 percentage points. Thus, on July 1, 2004, L must take into account an increase of 10 (5 + 5) percentage points in determining whether it has an ownership change.

Example 2—(i) Facts. E is a qualified trust established under Plan F. L, a publicly traded corporation, has 100x shares of stock outstanding. As of January 1, 2006, C owns 5x shares of L stock and is not a participant or beneficiary of a participant in Plan F. At all times prior to January 1, 2006, E owns no L stock. On January 1, 2006, E acquires 10x shares of L stock from members of the public group of L. On December 1, 2007, E distributes 5x shares of L stock to some of the participants in Plan F. No one participant acquires all 5x shares as a result of the distribution. On February 1, 2008, C purchases 1x shares of L stock from the public group of L. (ii) *Analysis.* Because E's acquisition of 10x shares of L stock on January 1, 2006, is an owner shift, that date is a testing date. As of the close of that date, E's percentage of stock ownership in L has increased by 10 percentage points.

(iii) As a result of the application of paragraph (a)(1) of this section to E's distribution of 5x shares of L stock to some Plan F participants on December 1, 2007, for testing dates on and after December 1, 2007, those distributees are treated as having acquired those shares of stock on January 1, 2006, from members of the public group of L, and E is not treated as having acquired those shares on that date. E's distribution of the 5x shares is not an owner shift. Therefore, December 1, 2007, is not a testing date.

(iv) February 1, 2008, is a testing date because on that date an owner shift results from C's purchase of 1x shares of L stock. As of the close of that testing date, the distributees of 5x shares of L stock are treated as members of the public group of L having acquired 5x shares of L stock from other members of the public group of L on January 1, 2006. Because those acquisitions are not by 5-percent shareholders, L does not take them into account. In addition, as of the close of February 1, 2008, E's percentage of stock ownership in L is 5 percent, and E's lowest percentage of stock ownership in L at any time within the testing period is 0 percent, representing an increase of 5 percentage points. In addition, as of the close of February 1, 2008, C's percentage of stock ownership in L is 6 percent, and C's lowest percentage of stock ownership in L at any time within the testing period is 5 percent, representing an increase of 1 percentage point. Therefore, on February 1, 2008, L must take into account an increase of 6 (5 + 1) percentage points in determining whether it has an ownership change.

(4) *Effective dates.* This section applies to all distributions after June 23, 2006. For distributions on or before June 23, 2006, see § 1.382–10T as contained in 26 CFR part 1, revised April 1, 2006.

(b) [Reserved]

§ 1.382–10T [Removed]

■ **Par. 4.** Section 1.382–10T is removed.

Mark E. Matthews,

Deputy Commissioner for Services and Enforcement.

Approved: June 20, 2006.

Eric Solomon,

Acting Deputy Assistant Secretary of the Treasury (Tax Policy).

[FR Doc. 06–5676 Filed 6–23–06; 9:48 am]

BILLING CODE 4820–01–P

ENVIRONMENTAL PROTECTION AGENCY

40 CFR Part 63

[EPA–R09–OAR–2006–0496; FRL–8190–1]

Delegation of National Emission Standards for Hazardous Air Pollutants for Source Categories; State of Arizona; Maricopa County Air Quality Department; State of California; San Joaquin Valley Unified Air Pollution Control District; State of Nevada; Nevada Division of Environmental Protection

AGENCY: Environmental Protection Agency (EPA).

ACTION: Direct final rule.

SUMMARY: EPA is amending certain regulations to reflect the current delegation status of national emission standards for hazardous air pollutants (NESHAPs) in Arizona, California, and Nevada. Several NESHAPs were delegated to the Maricopa County Air Quality Department on May 16, 2006, to the San Joaquin Valley Unified Air Pollution Control District on October 31, 2005, and to the Nevada Division of Environmental Protection on May 9, 2006. The purpose of this action is to update the listing in the Code of Federal Regulations.

DATES: This rule is effective on August 28, 2006 without further notice, unless EPA receives adverse comments by July 28, 2006. If we receive such comments, we will publish a timely withdrawal in the **Federal Register** to notify the public that this direct final rule will not take effect.

ADDRESSES: Submit comments, identified by docket number EPA–R09–OAR–2006–0496, by one of the following methods:

1. *Federal eRulemaking Portal: http://www.regulations.gov.* Follow the on-line instructions.
2. *E-mail: steckel.andrew@epa.gov.*
3. *Mail or delivery:* Andrew Steckel (Air–4), U.S. Environmental Protection Agency Region IX, 75 Hawthorne Street, San Francisco, CA 94105–3901.

Instructions: All comments will be included in the public docket without change and may be made available online at *http://www.regulations.gov*, including any personal information provided, unless the comment includes Confidential Business Information (CBI) or other information whose disclosure is restricted by statute. Information that you consider CBI or otherwise protected should be clearly identified as such and should not be submitted through *http://www.regulations.gov* or e-mail. *http://www.regulations.gov* is an ''anonymous access'' system, and EPA will not know your identity or contact information unless you provide it in the body of your comment. If you send e-mail directly to EPA, your e-mail address will be automatically captured and included as part of the public comment. If EPA cannot read your comment due to technical difficulties and cannot contact you for clarification, EPA may not be able to consider your comment.

Docket: The index to the docket for this action is available electronically at *http://www.regulations.gov* and in hard copy at EPA Region IX, 75 Hawthorne Street, San Francisco, California. While all documents in the docket are listed in the index, some information may be publicly available only at the hard copy location (*e.g.*, copyrighted material), and some may not be publicly available in either location (*e.g.*, CBI). To inspect the hard copy materials, please schedule an appointment during normal business hours with the contact listed in the **FOR FURTHER INFORMATION CONTACT** section.

FOR FURTHER INFORMATION CONTACT: Mae Wang, EPA Region IX, (415) 947–4124, *wang.mae@epa.gov.*

SUPPLEMENTARY INFORMATION: Throughout this document, ''we,'' ''us'' and ''our'' refer to EPA.

I. Background

A. Delegation of NESHAPs

Section 112(l) of the Clean Air Act, as amended in 1990 (CAA), authorizes EPA to delegate to state or local air pollution control agencies the authority to implement and enforce the standards set out in the Code of Federal Regulations, Title 40 (40 CFR), Part 63, National Emission Standards for Hazardous Air Pollutants for Source

Categories. On November 26, 1993, EPA promulgated regulations, codified at 40 CFR Part 63, Subpart E (hereinafter referred to as ''Subpart E''), establishing procedures for EPA's approval of state rules or programs under section 112(l) (see 58 FR 62262). Subpart E was later amended on September 14, 2000 (see 65 FR 55810).

Any request for approval under CAA section 112(l) must meet the approval criteria in 112(l)(5) and Subpart E. To streamline the approval process for future applications, a state or local agency may submit a one-time demonstration that it has adequate authorities and resources to implement and enforce any CAA section 112 standards. If such demonstration is approved, then the state or local agency would no longer need to resubmit a demonstration of these same authorities and resources for every subsequent request for delegation of CAA section 112 standards. However, EPA maintains the authority to withdraw its approval if the State does not adequately implement or enforce an approved rule or program.

B. Maricopa County Delegations

On October 30, 1996, EPA approved the Maricopa County Air Quality Department's program for accepting delegation of CAA section 112 standards that are unchanged from Federal standards as promulgated (see 61 FR 55910). On March 2, 2000, EPA published a direct final action delegating to Maricopa County several NESHAPs (see 65 FR 11231). That action explained the procedure for EPA to grant future delegations to Maricopa by letter, with periodic **Federal Register** listings of standards that have been delegated. On April 21, 2006, Maricopa requested delegation of the following NESHAPs contained in 40 CFR Part 63:

- Subpart J—NESHAP for Polyvinyl Chloride and Copolymers Production
- Subpart S—NESHAP from the Pulp and Paper Industry
- Subpart AA—NESHAP from Phosphoric Acid Manufacturing Plants
- Subpart BB—NESHAP from Phosphate Fertilizers Production Plants
- Subpart HH—NESHAP from Oil and Natural Gas Production Facilities
- Subpart MM—NESHAP for Chemical Recovery Combustion Sources at Kraft, Soda, Sulfite, and Stand-Alone Semichemical Pulp Mills
- Subpart SS—National Emission Standards for Closed Vent Systems, Control Devices, Recovery Devices and Routing to a Fuel Gas System or a Process
- Subpart TT—National Emission Standards for Equipment Leaks—Control Level 1
- Subpart UU—National Emission Standards for Equipment Leaks—Control Level 2 Standards
- Subpart WW—National Emission Standards for Storage Vessels (Tanks)—Control Level 2
- Subpart XX—National Emission Standards for Ethylene Manufacturing Process Units: Heat Exchange Systems and Waste Operations
- Subpart YY—NESHAP for Source Categories: Generic MACT Standards
- Subpart CCC—NESHAP for Steel Pickling—HCl Process Facilities and Hydrochloric Acid Regeneration Plants
- Subpart DDD—NESHAP for Mineral Wool Production
- Subpart EEE—NESHAP from Hazardous Waste Combustors
- Subpart GGG—National Emission Standards for Pharmaceuticals Production
- Subpart HHH—NESHAP from Natural Gas Transmission and Storage Facilities
- Subpart III—NESHAP for Flexible Polyurethane Foam Production
- Subpart LLL—NESHAP from the Portland Cement Manufacturing Industry
- Subpart MMM—NESHAP for Pesticide Active Ingredient Production
- Subpart NNN—NESHAP for Wool Fiberglass Manufacturing
- Subpart OOO—National Emission Standards for Hazardous Air Pollutant Emissions: Manufacture of Amino/Phenolic Resins
- Subpart PPP—National Emission Standards for Polyether Polyols Production
- Subpart QQQ—National Emission Standards for Primary Copper Smelting
- Subpart RRR—National Emission Standards for Secondary Aluminum Production
- Subpart TTT—National Emission Standards for Primary Lead Smelting
- Subpart UUU—National Emission Standards for Petroleum Refineries: Catalytic Cracking, Catalytic Reforming, and Sulfur Plan Units
- Subpart VVV—NESHAP: Publicly Owned Treatment Works
- Subpart XXX—National Emission Standards for Ferroalloys Production
- Subpart AAAA—National Emission Standards for Municipal Solid Waste Landfills
- Subpart CCCC—National Emission Standards for Manufacturing of Nutritional Yeast
- Subpart EEEE—National Emission Standards for Organic Liquids Distribution (Non-Gasoline)
- Subpart FFFF—NESHAP: Miscellaneous Organic Chemical Manufacturing
- Subpart GGGG—National Emission Standards for Solvent Extraction for Vegetable Oil Production
- Subpart HHHH—National Emission Standards for Wet-Formed Fiberglass Mat Production
- Subpart IIII—NESHAP: Surface Coating of Automobiles and Light-Duty Trucks
- Subpart JJJJ—NESHAP: Paper and Other Web Coating
- Subpart KKKK—NESHAP: Surface Coating of Metal Cans
- Subpart MMMM—NESHAP for Surface Coating of Miscellaneous Metal Parts and Products
- Subpart NNNN—National Emission Standards for Large Appliances
- Subpart OOOO—NESHAP: Printing, Coating, and Dyeing of Fabrics and Other Textiles
- Subpart PPPP—NESHAP for Surface Coating of Plastic Parts and Products
- Subpart QQQQ—National Emission Standards for Wood Building Products
- Subpart RRRR—National Emission Standards for Surface Coating of Metal Furniture
- Subpart SSSS—National Emission Standards for Surface Coating of Metal Coil
- Subpart TTTT—National Emission Standards for Leather Finishing Operations
- Subpart UUUU—National Emission Standards for Cellulose Products Manufacturing
- Subpart VVVV—National Emission Standards for Boat Manufacturing
- Subpart WWWW—National Emission Standards for Reinforced Plastics Composites Production
- Subpart XXXX—National Emission Standards for Tire Manufacturing
- Subpart YYYY—NESHAP for Stationary Combustion Turbines
- Subpart ZZZZ—NESHAP for Stationary Reciprocating Internal Combustion Engines
- Subpart AAAAA—NESHAP for Lime Manufacturing Plants
- Subpart BBBBB—National Emission Standards for Semiconductor Manufacturing
- Subpart CCCCC—National Emission Standards for Coke Ovens: Pushing, Quenching, and Battery Stacks
- Subpart EEEEE—NESHAP for Iron and Steel Foundries
- Subpart FFFFF—National Emission Standards for Integrated Iron and Steel
- Subpart GGGGG—NESHAP: Site Remediation
- Subpart HHHHH—NESHAP: Miscellaneous Coating Manufacturing
- Subpart IIIII—NESHAP: Mercury Emissions from Mercury Cell Chlor-Alkali Plants
- Subpart JJJJJ—National Emission Standards for Brick and Structural Clay Products Manufacturing
- Subpart KKKKK—NESHAP for Clay Ceramics Manufacturing
- Subpart LLLLL—National Emission Standards for Asphalt Roofing and Processing
- Subpart MMMMM—National Emission Standards for Flexible Polyurethane Foam Fabrication Operations
- Subpart NNNNN—NESHAP: Hydrochloric Acid Production
- Subpart PPPPP—National Emission Standards for Engine Test Cells/Stands
- Subpart QQQQQ—National Emission Standards for Friction Products Manufacturing
- Subpart RRRRR—NESHAP: Taconite Iron Ore Processing
- Subpart SSSSS—National Emission Standards for Refractory Products Manufacturing
- Subpart TTTTT—NESHAP for Primary Magnesium Refining

On May 16, 2006, EPA granted delegation to Maricopa County for these NESHAPs, along with any amendments to previously-delegated NESHAPs, as of July 1, 2004. Today's action is serving to notify the public of the May 16, 2006, delegation and to codify these delegations into the Code of Federal Regulations.

Maricopa County also included a request for delegation of the Federal List of Hazardous Air Pollutants, Petitions Process, Lesser Quantity Designations, Source Category List codified at 40 CFR Part 63, Subpart C. This Subpart does not need to be delegated under the Clean Air Act section 112(l) approval process. EPA does not delegate to state or local agencies the authority to make changes to this Federal list of pollutants, and Subpart C does not contain any provisions or authorities requiring implementation by state or local agencies. As a result, EPA is not taking action to delegate 40 CFR Part 63, Subpart C or its amendments to Maricopa County.

C. San Joaquin Valley Delegations

On September 28, 2004, the San Joaquin Valley Unified Air Pollution Control District (SJVUAPCD) requested, through the California Air Resources Board, delegation of authority to implement and enforce a number of 40 CFR Part 61 and Part 63 NESHAP as they apply to area sources. The request was limited to standards that were incorporated by reference in SJVUAPCD Rule 4002, amended on May 20, 2004. The delegation request was also limited in scope to area sources because the delegation of these standards had already been granted with respect to major sources.

On October 31, 2005, EPA granted to SJVUAPCD the delegation of 40 CFR Part 63 NESHAP that are applicable to area sources and incorporated by reference in SJVUAPCD Rule 4002, as amended on May 20, 2004. The delegation did not include any standards that are not incorporated by reference in the May 20, 2004, version of Rule 4002. If Rule 4002 is amended in the future, SJVUAPCD will need to submit a new request for delegation of any area source NESHAP that are newly incorporated into Rule 4002. Today's action is serving to notify the public of the October 31, 2005, delegations and to codify these delegations into the Code of Federal Regulations.

D. NDEP Delegations

On May 27, 1998, EPA published a direct final action delegating to the Nevada Division of Environmental Protection (NDEP) several NESHAPs and approving NDEP's delegation mechanism for future standards (see 63 FR 28906). That action explained the procedure for EPA to grant delegations to NDEP by letter, with periodic **Federal Register** listings of standards that have been delegated. On April 4, 2006, NDEP requested delegation of the following 40 CFR Part 63 NESHAPs and amendments:

- Amendments to Subpart LL—NESHAP for Primary Aluminum Production Plants, as published in 70 FR 66280 (November 2, 2005)
- Amendments to Subpart EEE—NESHAP for Hazardous Waste Combustors, as published in 70 FR 59401 (October 12, 2005)
- Amendments to Subpart QQQ—NESHAP for Primary Copper Smelting, as published in 70 FR 40672 (July 14, 2005)
- Amendments to Subpart RRR—NESHAP for Secondary Aluminum Production, as published in 70 FR 57513 (October 3, 2005)
- Subpart FFFF—NESHAP: Miscellaneous Organic Chemical Manufacturing, as published in 70 FR 38553 (July 1, 2005) and amended in 70 FR 51269 (August 30, 2005)
- Amendments to Subpart UUUU—NESHAP for Cellulose Products Manufacturing, as published in 70 FR 46683 (August 10, 2005)
- Amendments to Subpart WWWW—NESHAP: Reinforced Plastic Composites Production, as published in 70 FR 50117 (August 25, 2005)
- Amendments to Subpart CCCCC—NESHAP for Coke Ovens: Pushing, Quenching, and Battery Stacks, as published in 70 FR 44285 (August 2, 2005)
- Subpart EEEEE—NESHAP for Iron and Steel Foundries, as published in the July 1, 2005, Code of Federal Regulations

On May 9, 2006, EPA granted delegation to NDEP for these NESHAPs, along with any amendments to previously-delegated NESHAPs, as of July 1, 2005. Today's action is serving to notify the public of the May 9, 2006, delegations and to codify these delegations into the Code of Federal Regulations.

NDEP also included a request for delegation of amendments to the regulations implementing CAA sections 112(g) and 112(j), codified at 40 CFR Part 63, Subpart B. These requirements need not be delegated under the section 112(l) approval process. When promulgating the regulations implementing section 112(g), EPA stated its view that ''the Act directly confers on the permitting authority the obligation to implement section 112(g) and to adopt a program which conforms to the requirements of this rule. Therefore, the permitting authority need not apply for approval under section 112(l) in order to use its own program to implement section 112(g)'' (see 61 FR 68397). Similarly, when promulgating the regulations implementing section 112(j), EPA stated its belief that ''section 112(l) approvals do not have a great deal of overlap with the section 112(j) provision, because section 112(j) is designed to use the title V permit process as the primary vehicle for establishing requirements'' (see 59 FR 26447). Therefore, state or local agencies implementing the requirements under sections 112(g) and 112(j) do not need approval under section 112(l). As a result, EPA is not taking action to delegate 40 CFR Part 63, Subpart B, to NDEP.

II. EPA Action

Today's document serves to notify the public of the delegation of NESHAPs to Maricopa County on May 16, 2006, to SJVUAPCD on October 31, 2005, and to NDEP on May 9, 2006. Today's action will codify these delegations into the Code of Federal Regulations.

III. Administrative Requirements

Under Executive Order 12866 (58 FR 51735, October 4, 1993), this action is not a ''significant regulatory action'' and therefore is not subject to review by the Office of Management and Budget. For this reason, this action is also not subject to Executive Order 13211, ''Actions Concerning Regulations That Significantly Affect Energy Supply, Distribution, or Use'' (66 FR 28355, May 22, 2001). This action merely updates the list of approved delegations in the Code of Federal Regulations and imposes no additional requirements. Accordingly, the Administrator certifies that this rule will not have a significant economic impact on a substantial number of small entities under the Regulatory Flexibility Act (5 U.S.C. 601 et seq.). Because this rule does not impose any additional enforceable duty beyond that required by state law, it does not contain any unfunded mandate or significantly or uniquely affect small governments, as described in the Unfunded Mandates Reform Act of 1995 (Public Law 104–4).

This rule also does not have tribal implications because it will not have a substantial direct effect on one or more Indian tribes, on the relationship between the Federal Government and Indian tribes, or on the distribution of power and responsibilities between the Federal Government and Indian tribes, as specified by Executive Order 13175 (65 FR 67249, November 9, 2000). This action also does not have Federalism implications because it does not have substantial direct effects on the States, on the relationship between the national government and the States, or on the distribution of power and responsibilities among the various

levels of government, as specified in Executive Order 13132 (64 FR 43255, August 10, 1999). This action merely updates the list of already-approved delegations, and does not alter the relationship or the distribution of power and responsibilities established in the CAA. This rule also is not subject to Executive Order 13045 ''Protection of Children from Environmental Health Risks and Safety Risks'' (62 FR 19885, April 23, 1997), because it is not economically significant.

In reviewing state delegation submissions, our role is to approve state choices, provided that they meet the criteria of the CAA. In this context, in the absence of a prior existing requirement for the State to use voluntary consensus standards (VCS), EPA has no authority to disapprove state submissions for failure to use VCS. It would thus be inconsistent with applicable law for EPA, when it reviews a state submission, to use VCS in place of a state submission that otherwise satisfies the provisions of the CAA. Thus, the requirements of section 12(d) of the National Technology Transfer and Advancement Act of 1995 (15 U.S.C. 272 note) do not apply. This rule does not impose an information collection burden under the provisions of the Paperwork Reduction Act of 1995 (44 U.S.C. 3501 et seq.).

The Congressional Review Act, 5 U.S.C. section 801 et seq., as added by the Small Business Regulatory Enforcement Fairness Act of 1996, generally provides that before a rule may take effect, the agency promulgating the rule must submit a rule report, which includes a copy of the rule, to each House of the Congress and to the Comptroller General of the United States. EPA will submit a report containing this rule and other required information to the U.S. Senate, the U.S. House of Representatives, and the Comptroller General of the United States prior to publication of the rule in the **Federal Register**. A major rule cannot take effect until 60 days after it is published in the **Federal Register**. This action is not a ''major rule'' as defined by 5 U.S.C. section 804(2).

Under section 307(b)(1) of the Clean Air Act, petitions for judicial review of this action must be filed in the United States Court of Appeals for the appropriate circuit by August 28, 2006. Filing a petition for reconsideration by the Administrator of this final rule does not affect the finality of this rule for the purposes of judicial review nor does it extend the time within which a petition for judicial review may be filed, and shall not postpone the effectiveness of such rule or action. This action may not be challenged later in proceedings to enforce its requirements (see section 307(b)(2)).

List of Subjects in 40 CFR Part 63

Environmental protection, Administrative practice and procedure, Air pollution control, Hazardous substances, Intergovernmental relations, Reporting and recordkeeping requirements.

Authority: This action is issued under the authority of Section 112 of the Clean Air Act, as amended, 42 U.S.C. 7412.

Dated: June 8, 2006.

Deborah Jordan,

Director, Air Division, Region IX.

■ Title 40, chapter I, part 63 of the Code of Federal Regulations is amended as follows:

PART 63—[AMENDED]

■ 1. The authority citation for Part 63 continues to read as follows:

Authority: 42 U.S.C. 7401, *et seq.*

Subpart E—Approval of State Programs and Delegation of Federal Authorities

■ 2. Section 63.99 is amended by revising paragraphs (a)(3) and (a)(28)(i), and adding paragraph (a)(5)(B)(10) to read as follows:

§ 63.99 Delegated Federal Authorities.

(a) * * *

(3) The following table lists the specific part 63 standards that have been delegated unchanged to the air pollution control agencies in the State of Arizona. The (X) symbol is used to indicate each category that has been delegated.

DELEGATION STATUS FOR PART 63 STANDARDS

[Arizona]

Subpart	Description	ADEQ [1]	MCAQD [2]	PDEQ [3]	PCAQCD [4]
A	General Provisions	X	X	X	X
F	Synthetic Organic Chemical Manufacturing Industry	X	X	X	X
G	Synthetic Organic Chemical Manufacturing Industry: Process Vents, Storage Vessels, Transfer Operations, and Wastewater.	X	X	X	X
H	Organic Hazardous Air Pollutants: Equipment Leaks	X	X	X	X
I	Organic Hazardous Air Pollutants: Certain Processes Subject to the Negotiated Regulation for Equipment Leaks.	X	X	X	X
J	Polyvinyl Chloride and Copolymers Production		X		
L	Coke Oven Batteries	X	X	X	X
M	Perchloroethylene Dry Cleaning	X	X	X	X
N	Hard and Decorative Chromium Electroplating and Chromium Anodizing Tanks.	X	X	X	X
O	Ethylene Oxide Sterilization Facilities	X	X	X	X
Q	Industrial Process Cooling Towers	X	X	X	X
R	Gasoline Distribution Facilities	X	X	X	X

DELEGATION STATUS FOR PART 63 STANDARDS—Continued

[Arizona]

Subpart	Description	ADEQ [1]	MCAQD [2]	PDEQ [3]	PCAQCD [4]
S	Pulp and Paper	X	X	X	
T	Halogenated Solvent Cleaning	X	X	X	X
U	Group I Polymers and Resins	X	X	X	X
W	Epoxy Resins Production and Non-Nylon Polyamides Production	X	X	X	X
X	Secondary Lead Smelting	X	X	X	X
AA	Phosphoric Acid Manufacturing Plants	X	X	X	
BB	Phosphate Fertilizers Production Plants	X	X	X	
CC	Petroleum Refineries	X	X	X	X
DD	Off-Site Waste and Recovery Operations	X	X	X	X
EE	Magnetic Tape Manufacturing Operations	X	X	X	X
GG	Aerospace Manufacturing and Rework Facilities	X	X	X	X
HH	Oil and Natural Gas Production Facilities	X	X	X	
JJ	Wood Furniture Manufacturing Operations	X	X	X	X
KK	Printing and Publishing Industry	X	X	X	X
LL	Primary Aluminum Reduction Plants	X		X	
MM	Chemical Recovery Combustion Sources at Kraft, Soda, Sulfite, and Stand-Alone Semichemical Pulp Mills.		X		
OO	Tanks—Level 1	X	X	X	X
PP	Containers	X	X	X	X
QQ	Surface Impoundments	X	X	X	X
RR	Individual Drain Systems	X	X	X	X
SS	Closed Vent Systems, Control Devices, Recovery Devices and Routing to a Fuel Gas System or a Process.	X	X	X	
TT	Equipment Leaks—Control Level 1	X	X	X	
UU	Equipment Leaks—Control Level 2	X	X	X	
VV	Oil-Water Separators and Organic-Water Separators	X	X	X	X
WW	Storage Vessels (Tanks)—Control Level 2	X	X	X	
XX	Ethylene Manufacturing Process Units: Heat Exchange Systems and Waste Operations.		X		
YY	Generic MACT Standards	X	X	X	
CCC	Steel Pickling	X	X	X	
DDD	Mineral Wool Production	X	X	X	
EEE	Hazardous Waste Combustors	X	X	X	
GGG	Pharmaceuticals Production	X	X	X	
HHH	Natural Gas Transmission and Storage Facilities	X	X	X	
III	Flexible Polyurethane Foam Production	X	X	X	
JJJ	Group IV Polymers and Resins	X	X	X	X
LLL	Portland Cement Manufacturing Industry	X	X	X	

DELEGATION STATUS FOR PART 63 STANDARDS—Continued

[Arizona]

Subpart	Description	ADEQ [1]	MCAQD [2]	PDEQ [3]	PCAQCD [4]
MMM	Pesticide Active Ingredient Production	X	X	X	
NNN	Wool Fiberglass Manufacturing	X	X	X	
OOO	Manufacture of Amino/Phenolic Resins		X	X	
PPP	Polyether Polyols Production	X	X	X	
QQQ	Primary Copper Smelting		X	X	
RRR	Secondary Aluminum Production		X	X	
TTT	Primary Lead Smelting	X	X	X	
UUU	Petroleum Refineries: Catalytic Cracking, Catalytic Reforming, and Sulfur Recovery Units.		X	X	
VVV	Publicly Owned Treatment Works		X	X	
XXX	Ferroalloys Production	X	X	X	
AAAA	Municipal Solid Waste Landfills		X	X	
CCCC	Manufacturing of Nutritional Yeast		X	X	
EEEE	Organic Liquids Distribution (non-gasoline)		X	X	
FFFF	Miscellaneous Organic Chemical Manufacturing		X	X	
GGGG	Solvent Extraction for Vegetable Oil Production		X	X	
HHHH	Wet-Formed Fiberglass Mat Production		X	X	
IIII	Surface Coating of Automobiles and Light-Duty Trucks		X		
JJJJ	Paper and Other Web Coating		X	X	
KKKK	Surface Coating of Metal Cans		X	X	
MMMM	Miscellaneous Metal Parts and Products		X	X	
NNNN	Large Appliances		X	X	
OOOO	Printing, Coating, and Dyeing of Fabrics and Other Textiles		X	X	
PPPP	Surface Coating of Plastic Parts and Products		X		
QQQQ	Wood Building Products		X	X	
RRRR	Surface Coating of Metal Furniture		X	X	
SSSS	Surface Coating of Metal Coil		X	X	
TTTT	Leather Finishing Operations		X	X	
UUUU	Cellulose Products Manufacturing		X	X	
VVVV	Boat Manufacturing		X	X	
WWWW	Reinforced Plastics Composites Production		X	X	
XXXX	Tire Manufacturing		X	X	
YYYY	Stationary Combustion Turbines		X	X	
ZZZZ	Stationary Reciprocating Internal Combustion Engines		X		
AAAAA	Lime Manufacturing Plants		X	X	
BBBBB	Semiconductor Manufacturing		X	X	
CCCCC	Coke Oven: Pushing, Quenching and Battery Stacks		X	X	

DELEGATION STATUS FOR PART 63 STANDARDS—Continued

[Arizona]

Subpart	Description	ADEQ [1]	MCAQD [2]	PDEQ [3]	PCAQCD [4]
EEEEE	Iron and Steel Foundries		X	X	
FFFFF	Integrated Iron and Steel		X	X	
GGGGG	Site Remediation		X	X	
HHHHH	Miscellaneous Coating Manufacturing		X	X	
IIIII	Mercury Emissions from Mercury Cell Chlor-Alkali Plants		X	X	
JJJJJ	Brick and Structural Clay Products Manufacturing		X	X	
KKKKK	Clay Ceramics Manufacturing		X	X	
LLLLL	Asphalt Roofing and Processing		X	X	
MMMMM	Flexible Polyurethane Foam Fabrication Operation		X	X	
NNNNN	Hydrochloric Acid Production		X	X	
PPPPP	Engine Test Cells/Stands	;	X	X	
QQQQQ	Friction Products Manufacturing		X	X	
RRRRR	Taconite Iron Ore Processing		X	X	
SSSSS	Refractory Products Manufacturing		X	X	
TTTTT	Primary Magnesium Refining		X	X	

[1] Arizona Department of Environmental Quality.
[2] Maricopa County Air Quality Department.
[3] Pima County Department of Environmental Quality.
[4] Pinal County Air Quality Control District.

* * * * *

(5) * * *

(B) * * *

(*10*) San Joaquin Valley Unified Air Pollution Control District, only for standards promulgated in this part and incorporated by reference in district Rule 4002, amended on May 20, 2004.

* * * * *

(28) * * *

(i) The following table lists the specific part 63 standards that have been delegated unchanged to the air pollution control agencies in the State of Nevada. The (X) symbol is used to indicate each category that has been delegated.

DELEGATION STATUS FOR PART 63 STANDARDS

[Nevada]

Subpart	Description	NDEP [1]	WCAQMD [2]	CCDAQM [3]
A	General Provisions	X	X	
F	Synthetic Organic Chemical Manufacturing Industry	X		
G	Synthetic Organic Chemical Manufacturing Industry: Process Vents, Storage Vessels, Transfer Operations, and Wastewater.	X		
H	Organic Hazardous Air Pollutants: Equipment Leaks	X		
I	Organic Hazardous Air Pollutants: Certain Processes Subject to the Negotiated Regulation for Equipment Leaks.	X		
J	Polyvinyl Chloride and Copolymers Production	X		
L	Coke Oven Batteries	X		
M	Perchloroethylene Dry Cleaning	X	X	
N	Hard and Decorative Chromium Electroplating and Chromium Anodizing Tanks.	X	X	

DELEGATION STATUS FOR PART 63 STANDARDS—Continued

[Nevada]

Subpart	Description	NDEP [1]	WCAQMD [2]	CCDAQM [3]
O	Ethylene Oxide Sterilization Facilities	X	X	
Q	Industrial Process Cooling Towers	X		
R	Gasoline Distribution Facilities	X	X	
S	Pulp and Paper	X		
T	Halogenated Solvent Cleaning	X	X	
U	Group I Polymers and Resins	X		
W	Epoxy Resins Production and Non-Nylon Polyamides Production	X		
X	Secondary Lead Smelting	X		
Y	Marine Tank Vessel Loading Operations	X		
AA	Phosphoric Acid Manufacturing Plants	X		
BB	Phosphate Fertilizers Production Plants	X		
CC	Petroleum Refineries	X		
DD	Off-Site Waste and Recovery Operations	X		
EE	Magnetic Tape Manufacturing Operations	X		
GG	Aerospace Manufacturing and Rework Facilities	X		
HH	Oil and Natural Gas Production Facilities	X		
II	Shipbuilding and Ship Repair (Surface Coating)	X		
JJ	Wood Furniture Manufacturing Operations	X		
KK	Printing and Publishing Industry	X	X	
LL	Primary Aluminum Reduction Plants	X		
MM	Chemical Recovery Combustion Sources at Kraft, Soda, Sulfite, and Stand-Alone Semichemical Pulp Mills.	X		
OO	Tanks—Level 1	X		
PP	Containers	X		
QQ	Surface Impoundments	X		
RR	Individual Drain Systems	X		
SS	Closed Vent Systems, Control Devices, Recovery Devices and Routing to a Fuel Gas System or a Process.	X		
TT	Equipment Leaks—Control Level 1	X		
UU	Equipment Leaks—Control Level 2	X		
VV	Oil-Water Separators and Organic-Water Separators	X		
WW	Storage Vessels (Tanks)—Control Level 2	X		
XX	Ethylene Manufacturing Process Units: Heat Exchange Systems and Waste Operations.	X		
YY	Generic MACT Standards	X		
CCC	Steel Pickling	X		
DDD	Mineral Wool Production	X		
EEE	Hazardous Waste Combustors	X		

DELEGATION STATUS FOR PART 63 STANDARDS—Continued

[Nevada]

Subpart	Description	NDEP [1]	WCAQMD [2]	CCDAQM [3]
GGG	Pharmaceuticals Production	X		
HHH	Natural Gas Transmission and Storage Facilities	X		
III	Flexible Polyurethane Foam Production	X		
JJJ	Group IV Polymers and Resins	X		
LLL	Portland Cement Manufacturing Industry	X		
MMM	Pesticide Active Ingredient Production	X		
NNN	Wool Fiberglass Manufacturing	X		
OOO	Manufacture of Amino/Phenolic Resins	X		
PPP	Polyether Polyols Production	X		
QQQ	Primary Copper Smelting	X		
RRR	Secondary Aluminum Production	X		
TTT	Primary Lead Smelting	X		
UUU	Petroleum Refineries: Catalytic Cracking, Catalytic Reforming, and Sulfur Recovery Units.	X		
VVV	Publicly Owned Treatment Works	X		
XXX	Ferroalloys Production	X		
AAAA	Municipal Solid Waste Landfills	X		
CCCC	Manufacturing of Nutritional Yeast	X		
EEEE	Organic Liquids Distribution (non-gasoline)	X		
FFFF	Miscellaneous Organic Chemical Manufacturing	X		
GGGG	Solvent Extraction for Vegetable Oil Production	X		
HHHH	Wet-Formed Fiberglass Mat Production	X		
JJJJ	Paper and Other Web Coating	X		
KKKK	Surface Coating of Metal Cans	X		
MMMM	Miscellaneous Metal Parts and Products	X		
NNNN	Large Appliances	X		
OOOO	Printing, Coating, and Dyeing of Fabrics and Other Textiles	X		
QQQQ	Wood Building Products	X		
RRRR	Surface Coating of Metal Furniture	X		
SSSS	Surface Coating of Metal Coil	X		
TTTT	Leather Finishing Operations	X		
UUUU	Cellulose Products Manufacturing	X		
VVVV	Boat Manufacturing	X		
WWWW	Reinforced Plastics Composites Production	X		
XXXX	Tire Manufacturing	X		
YYYY	Stationary Combustion Turbines	X		
ZZZZ	Stationary Reciprocating Internal Combustion Engines	X		

DELEGATION STATUS FOR PART 63 STANDARDS—Continued

[Nevada]

Subpart	Description	NDEP [1]	WCAQMD [2]	CCDAQM [3]
AAAAA	Lime Manufacturing Plants	X		
BBBBB	Semiconductor Manufacturing	X		
CCCCC	Coke Oven: Pushing, Quenching and Battery Stacks	X		
DDDDD	Industrial, Commercial, and Institutional Boiler and Process Heaters	X		
EEEEE	Iron and Steel Foundries	X		
FFFFF	Integrated Iron and Steel	X		
JJJJJ	Brick and Structural Clay Products Manufacturing	X		
KKKKK	Clay Ceramics Manufacturing	X		
LLLLL	Asphalt Roofing and Processing	X		
MMMMM	Flexible Polyurethane Foam Fabrication Operation	X		
NNNNN	Hydrochloric Acid Production	X		
PPPPP	Engine Test Cells/Stands	X		
QQQQQ	Friction Products Manufacturing	X		
SSSSS	Refractory Products Manufacturing	X		

[1] Nevada Division of Environmental Protection.
[2] Washoe County Air Quality Management Division.
[3] Clark County Department of Air Quality Management.

* * * * *

[FR Doc. 06–5841 Filed 6–27–06; 8:45 am]

BILLING CODE 6560–50–P

ENVIRONMENTAL PROTECTION AGENCY

40 CFR Part 180

[EPA–HQ–OPP–2006–0395; FRL–8068–2]

Myclobutanil; Pesticide Tolerances for Emergency Exemptions

AGENCY: Environmental Protection Agency (EPA).

ACTION: Final rule.

SUMMARY: This regulation establishes time-limited tolerances for legume vegetables (except soybeans) and foliage of legume vegetables (except soybeans) of myclobutanil in or on vegetable, legume (except soybeans) and vegetable, foliage of legume (except soybeans). This action is in response to EPA's granting of an emergency exemption under section 18 of the Federal Insecticide, Fungicide, and Rodenticide Act (FIFRA) authorizing use of the pesticide on vegetable, legume (except soybeans) and vegetable, foliage of legume (except soybeans). This regulation establishes a maximum permissible level for residues of myclobutanil in this food commodity. These tolerances will expire and are revoked on June 30, 2009.

DATES: This regulation is effective June 28, 2006. Objections and requests for hearings must be received on or before August 28, 2006, and must be filed in accordance with the instructions provided in 40 CFR part 178 (see also Unit I.C. of the **SUPPLEMENTARY INFORMATION**).

ADDRESSES: EPA has established a docket for this action under docket identification (ID) number EPA–HQ–OPP–2006–0395. All documents in the docket are listed in the index for the docket. Although listed in the index, some information is not publicly available, e.g., Confidential Business Information (CBI) or other information whose disclosure is restricted by statute. Certain other material, such as copyrighted material, is not placed on the Internet and will be publicly available only in hard copy form. Publicly available docket materials are available in the electronic docket at *http://www.regulations.gov*, or, if only available in hard copy, at the OPP Regulatory Public Docket in Rm. S-4400, One Potomac Yard (South Building), 2777 S. Crystal Drive, Arlington, VA. The Docket Facility is open from 8:30 a.m. to 4 p.m., Monday through Friday, excluding legal holidays. The telephone number for the Docket Facility is (703) 305–5805.

FOR FURTHER INFORMATION CONTACT: Stacey Groce, Registration Division (7505P), Office of Pesticide Programs, Environmental Protection Agency, 1200 Pennsylvania Ave., NW., Washington, DC 20460–0001; telephone number: (703) 305–2505; e-mail address: *groce.stacey@epa.gov*.

SUPPLEMENTARY INFORMATION:

I. General Information

A. Does this Action Apply to Me?

You may be potentially affected by this action if you are an agricultural producer, food manufacturer, or pesticide manufacturer. Potentially affected entities may include, but are not limited to:

- Crop production (NAICS 111)
- Animal production (NAICS 112)
- Food manufacturing (NAICS 311)
- Pesticide manufacturing (NAICS 32532)

This listing is not intended to be exhaustive, but rather provides a guide for readers regarding entities likely to be affected by this action. Other types of entities not listed in this unit could also be affected. The North American Industrial Classification System (NAICS) codes have been provided to

assist you and others in determining whether this action might apply to certain entities. If you have any questions regarding the applicability of this action to a particular entity, consult the person listed under **FOR FURTHER INFORMATION CONTACT**.

B. How Can I Access Electronic Copies of this Document?

In addition to accessing an electronic copy of this **Federal Register** document through the electronic docket at *http://www.regulations.gov*, you may access this **Federal Register** document electronically through the EPA Internet under the ''**Federal Register**'' listings at *http://www.epa.gov/fedrgstr*. You may also access a frequently updated electronic version of 40 CFR part 180 through the Government Printing Office's pilot e-CFR site at *http://www.gpoaccess.gov/ecfr*.

C. Can I File an Objection or Hearing Request?

Under section 408(g) of the FFDCA, as amended by the FQPA, any person may file an objection to any aspect of this regulation and may also request a hearing on those objections. The EPA procedural regulations which govern the submission of objections and requests for hearings appear in 40 CFR part 178. You must file your objection or request a hearing on this regulation in accordance with the instructions provided in 40 CFR part 178. To ensure proper receipt by EPA, you must identify docket ID number EPA–HQ–OPP–2006–0395 in the subject line on the first page of your submission. All requests must be in writing, and must be mailed or delivered to the Hearing Clerk on or before August 28, 2006.

In addition to filing an objection or hearing request with the Hearing Clerk as described in 40 CFR part 178, please submit a copy of the filing that does not contain any CBI for inclusion in the public docket that is described in **ADDRESSES.** Information not marked confidential pursuant to 40 CFR part 2 may be disclosed publicly by EPA without prior notice. Submit your copies, identified by docket ID number EPA–HQ–OPP–2006–0395, by one of the following methods:

- Federal eRulemaking Portal: *http://www.regulations.gov*. Follow the on-line instructions for submitting comments.
- *Mail*: Office of Pesticide Programs (OPP) Regulatory Public Docket (7502P), Environmental Protection Agency, 1200 Pennsylvania Ave., NW., Washington, DC 20460–0001.
- *Delivery*: OPP Regulatory Public Docket (7502P), Environmental Protection Agency, Rm. S–4400, One Potomac Yard (South Building), 2777 S. Crystal Drive, Arlington, VA. Deliveries are only accepted during the Docket's normal hours of operation (8:30 a.m. to 4 p.m., Monday through Friday, excluding legal holidays). Special arrangements should be made for deliveries of boxed information. The telephone number for the Docket Facility is (703) 305–5805.

II. Background and Statutory Findings

EPA, on its own initiative, in accordance with sections 408(e) and 408(l)(6) of the Federal Food, Drug, and Cosmetic Act (FFDCA), 21 U.S.C. 346a, is establishing tolerances for combined residues of the fungicide myclobutanil, alpha-butyl-alpha-(4-chlorophenyl)-1H-1,2,4-triazole-1-propanenitrile and its alcohol metabolite (alpha-(3-hydroxybutyl)-alpha-(4-chlorophenyl)-1H-1,2,4-triazole-1-propanenitrile (free and bound), in or on vegetable, legume (except soybean), Crop Group 6 and vegetable, foliage of legume (except soybean), Crop Group 7 at 1.0 parts per million (ppm). These tolerances will expire and are revoked on June 30, 2009. EPA will publish a document in the **Federal Register** to remove the revoked tolerances from the Code of Federal Regulations.

Section 408(l)(6) of the FFDCA requires EPA to establish a time-limited tolerance or exemption from the requirement for a tolerance for pesticide chemical residues in food that will result from the use of a pesticide under an emergency exemption granted by EPA under section 18 of FIFRA. Such tolerances can be established without providing notice or period for public comment. EPA does not intend for its actions on section 18 related tolerances to set binding precedents for the application of section 408 of the FFDCA and the new safety standard to other tolerances and exemptions. Section 408(e) of the FFDCA allows EPA to establish a tolerance or an exemption from the requirement of a tolerance on its own initiative, i.e., without having received any petition from an outside party.

Section 408(b)(2)(A)(i) of the FFDCA allows EPA to establish a tolerance (the legal limit for a pesticide chemical residue in or on a food) only if EPA determines that the tolerance is ''safe.'' Section 408(b)(2)(A)(ii) of the FFDCA defines ''safe'' to mean that ''there is a reasonable certainty that no harm will result from aggregate exposure to the pesticide chemical residue, including all anticipated dietary exposures and all other exposures for which there is reliable information.'' This includes exposure through drinking water and in residential settings, but does not include occupational exposure. Section 408(b)(2)(C) of the FFDCA requires EPA to give special consideration to exposure of infants and children to the pesticide chemical residue in establishing a tolerance and to ''ensure that there is a reasonable certainty that no harm will result to infants and children from aggregate exposure to the pesticide chemical residue. . . .''

Section 18 of the FIFRA authorizes EPA to exempt any Federal or State agency from any provision of FIFRA, if EPA determines that ''emergency conditions exist which require such exemption.'' This provision was not amended by the Food Quality Protection Act of 1996 (FQPA). EPA has established regulations governing such emergency exemptions in 40 CFR part 166.

III. Emergency Exemption for Myclobutanil on Vegetable, Legume (Except Soybeans) and Vegetable, Foliage of Legume (Except Soybeans and FFDCA Tolerances

The States of Florida and Tennessee, as lead state agencies in what is essentially a ''national'' emergency exemption request for vegetable legume growing states, have petitioned the Agency requesting an Emergency Exemption for myclobutanil to control soybean rust under section 18 of FIFRA. On November 10, 2004, U.S. Department of Agriculture's Animal and Plant Health Inspection Service (USDA/APHIS) confirmed the presence of *Phakopsora pachyrhizi*, the pathogen that causes soybean rust, on soybean leaf samples taken from two plots associated with a Louisiana State University research farm. Soybean rust has been designated as a biosecurity threat and therefore it is important that control measures be available for this disease. Legume crops, in general are considered a suitable host for the pathogen that causes soybean rust. So, for this reason, legume crops are vulnerable to this plant disease. EPA has authorized under FIFRA section 18 the use of myclobutanil on vegetable, legume (except soybeans) and vegetable, foliage of legume (except soybeans) for control of soybean rust in Florida and Tennessee, and all other states that have requested an exemption for this use. After having reviewed the submission, EPA concurs that emergency conditions exist for these States.

As part of its assessment of this emergency exemption, EPA assessed the potential risks presented by residues of myclobutanil in or on vegetable, legume (except soybeans) and vegetable, foliage of legume (except soybeans). In doing

so, EPA considered the safety standard in section 408(b)(2) of the FFDCA, and EPA decided that the necessary tolerance under section 408(l)(6) of the FFDCA would be consistent with the safety standard and with FIFRA section 18. Consistent with the need to move quickly on the emergency exemption in order to address an urgent non-routine situation and to ensure that the resulting food is safe and lawful, EPA is issuing these tolerances without notice and opportunity for public comment as provided in section 408(l)(6) of the FFDCA. Although these tolerances will expire and are revoked on June 30, 2009, under section 408(l)(5) of the FFDCA, residues of the pesticide not in excess of the amounts specified in the tolerances remaining in or on vegetable, legume (except soybeans) and vegetable, foliage of legume (except soybeans) after that date will not be unlawful, provided the pesticide is applied in a manner that was lawful under FIFRA, and the residues do not exceed a level that was authorized by this tolerance at the time of that application. EPA will take action to revoke these tolerances earlier if any experience with, scientific data on, or other relevant information on this pesticide indicate that the residues are not safe.

Because these tolerances are being approved under emergency conditions, EPA has not made any decisions about whether myclobutanil meets EPA's registration requirements for use on vegetable, legume (except soybeans) and vegetable, foliage of legume (except soybeans) or whether permanent tolerances for this use would be appropriate. Under these circumstances, EPA does not believe that these tolerances serve as a basis for registration of myclobutanil by a State for special local needs under FIFRA section 24(c). Nor do these tolerances serve as the basis for any State other than those which have been granted exemptions as part of the vegetable, legume (except soybeans) and vegetable, foliage of legume (except soybeans) section 18 to use this pesticide on this crop under section 18 of FIFRA without following all provisions of EPA's regulations implementing FIFRA section 18 as identified in 40 CFR part 166. For additional information regarding the emergency exemption for myclobutanil, contact the Agency's Registration Division at the address provided under **FOR FURTHER INFORMATION CONTACT**.

IV. Aggregate Risk Assessment and Determination of Safety

EPA performs a number of analyses to determine the risks from aggregate exposure to pesticide residues. For further discussion of the regulatory requirements of section 408 of the FFDCA and a complete description of the risk assessment process, see the final rule on Bifenthrin Pesticide Tolerances (62 FR 62961, November 26, 1997) (FRL–5754–7).

Consistent with section 408(b)(2)(D) of the FFDCA, EPA has reviewed the available scientific data and other relevant information in support of this action. EPA has sufficient data to assess the hazards of myclobutanil and to make a determination on aggregate exposure, consistent with section 408(b)(2) of the FFDCA, for time-limited tolerances for residues of myclobutanil in or on vegetable, legume (except soybeans) and vegetable, foliage of legume (except soybeans) at 1.0 ppm. EPA recently assessed the potential risks presented by residues of myclobutanil in or on vegetable, legume (except soybeans) and vegetable, foliage of legume (except soybeans) as part of the dietary exposure estimates in the human health risk assessment for another proposed section 18 use of myclobutanil. EPA was still evaluating the emergency application on the specialty legume crops at that time and did not include a regulatory expression for these time-limited tolerances in the earlier notice. However, the human health risk assessment of the dietary exposures and risks associated with establishing these tolerances is discussed fully in the final rule published in the **Federal Register** of August 24, 2005 (70 FR 49499) (FRL–7731–2).

V. Other Considerations

A. Analytical Enforcement Methodology

Adequate enforcement methodology (example—gas chromatography) is available to enforce the tolerance expression. The method may be requested from: Chief, Analytical Chemistry Branch, Environmental Science Center, 701 Mapes Rd., Ft. Meade, MD 20755–5350; telephone number: (410) 305–2905; e-mail address: *residuemethods@epa.gov*.

B. International Residue Limits

There are no CODEX, Canadian, or Mexican Maximum Residue Limits (MRLs) for myclobutanil on legumes (excluding soybeans). Therefore, there are no international harmonization issues associated with this action.

VI. Conclusion

Therefore, the tolerances are established for combined residues of myclobutanil, alpha-butyl-alpha-(4-chlorophenyl)-1H-1,2,4-triazole-1-propanenitrile and its alcohol metabolite (alpha-(3-hydroxybutyl)-alpha-(4-chlorophenyl)-1H-1,2,4-triazole-1-propanenitrile (free and bound), in or on vegetable, legume (except soybeans) and vegetable, foliage of legume (except soybeans) at 1.0 ppm.

VII. Statutory and Executive Order Reviews

This final rule establishes time-limited tolerances under section 408 of the FFDCA. The Office of Management and Budget (OMB) has exempted these types of actions from review under Executive Order 12866, entitled *Regulatory Planning and Review* (58 FR 51735, October 4, 1993). Because this rule has been exempted from review under Executive Order 12866 due to its lack of significance, this rule is not subject to Executive Order 13211, *Actions Concerning Regulations That Significantly Affect Energy Supply, Distribution, or Use* (66 FR 28355, May 22, 2001). This final rule does not contain any information collections subject to OMB approval under the Paperwork Reduction Act (PRA), 44 U.S.C. 3501 *et seq.*, or impose any enforceable duty or contain any unfunded mandate as described under Title II of the Unfunded Mandates Reform Act of 1995 (UMRA) (Public Law 104–4). Nor does it require any special considerations under Executive Order 12898, entitled *Federal Actions to Address Environmental Justice in Minority Populations and Low-Income Populations* (59 FR 7629, February 16, 1994); or OMB review or any Agency action under Executive Order 13045, entitled *Protection of Children from Environmental Health Risks and Safety Risks* (62 FR 19885, April 23, 1997). This action does not involve any technical standards that would require Agency consideration of voluntary consensus standards pursuant to section 12(d) of the National Technology Transfer and Advancement Act of 1995 (NTTAA), Public Law 104–113, section 12(d) (15 U.S.C. 272 note). Since tolerances and exemptions that are established on the basis of a FIFRA section 18 exemption under section 408 of the FFDCA, such as the tolerances in this final rule, do not require the issuance of a proposed rule, the requirements of the Regulatory Flexibility Act (RFA) (5 U.S.C. 601 *et seq.*) do not apply. In addition, the Agency has determined that this action will not have a substantial direct effect on States, on the relationship between the national government and the States, or on the distribution of power and responsibilities among the various levels of government, as specified in

by State and local officials in the development of regulatory policies that have federalism implications.'' ''Policies that have federalism implications'' is defined in the Executive order to include regulations that have ''substantial direct effects on the States, on the relationship between the national government and the States, or on the distribution of power and responsibilities among the various levels of government.'' This final rule directly regulates growers, food processors, food handlers, and food retailers, not States. This action does not alter the relationships or distribution of power and responsibilities established by Congress in the preemption provisions of section 408(n)(4) of the FFDCA. For these same reasons, the Agency has determined that this rule does not have any ''tribal implications'' as described in Executive Order 13175, entitled *Consultation and Coordination with Indian Tribal Governments* (65 FR 67249, November 6, 2000). Executive Order 13175, requires EPA to develop an accountable process to ensure ''meaningful and timely input by tribal officials in the development of regulatory policies that have tribal implications.'' ''Policies that have tribal implications'' is defined in the Executive order to include regulations that have ''substantial direct effects on one or more Indian tribes, on the relationship between the Federal Government and the Indian tribes, or on the distribution of power and responsibilities between the Federal Government and Indian tribes.'' This rule will not have substantial direct effects on tribal governments, on the relationship between the Federal Government and Indian tribes, or on the distribution of power and responsibilities between the Federal Government and Indian tribes, as specified in Executive Order 13175. Thus, Executive Order 13175 does not apply to this rule.

VIII. Congressional Review Act

The Congressional Review Act, 5 U.S.C. 801 *et seq.*, as added by the Small Business Regulatory Enforcement Fairness Act of 1996, generally provides that before a rule may take effect, the agency promulgating the rule must submit a rule report, which includes a copy of the rule, to each House of the Congress and to the Comptroller General of the United States. EPA will submit a report containing this rule and other required information to the U.S. Senate, the U.S. House of Representatives, and the Comptroller General of the United States prior to publication of this final rule in the **Federal Register**. This final rule is not a ''major rule'' as defined by 5 U.S.C. 804(2).

List of Subjects in 40 CFR Part 180

Environmental protection, Administrative practice and procedure, Agricultural commodities, Pesticides and pests, Reporting and recordkeeping requirements.

Dated: June 16, 2006.

Lois Rossi,

Director, Registration Division, Office of Pesticide Programs.

■ Therefore, 40 CFR chapter I is amended as follows:

PART 180—[AMENDED]

■ 1. The authority citation for part 180 continues to read as follows:

Authority: 21 U.S.C. 321(q), 346a and 371.

■ 2. Section 180.443 is amended by alphabetically adding commodities to the table in paragraph (b) to read as follows:

§ 180.443 Myclobutanil; tolerances for residues.

* * * * *

(b) * * *

Commodity	Parts per million	Expiration/revocation date
* * * * *		
Vegetable, foliage of legume, group 07	1.0	6/30/09
Vegetable, legume, group 06	1.0	6/30/09

* * * * *

[FR Doc. E6–10093 Filed 6–27–06; 8:45 am]

BILLING CODE 6560–50–S

FEDERAL COMMUNICATIONS COMMISSION

47 CFR Part 64

[CG Docket No. 03–123; FCC 06–81]

Telecommunications Relay Services and Speech-to-Speech Services for Individuals With Hearing and Speech Disabilities

AGENCY: Federal Communications Commission.

ACTION: Clarification.

SUMMARY: In this document, the Commission addresses two issues concerning the provision of Video Relay Service (VRS) in a final rule document, 69 FR 53346, Sept. 1, 2004, a form of telecommunications relay services (TRS). The Commission clarifies that if the calling party or the VRS communications assistant (CA) find that they are not communicating effectively given the nature of the call, the 10 minute in-call replacement rule does not apply and the VRS provider may have another CA handle the call. Also in the document, the Commission clarifies that the VRS CA may ask the VRS user questions during call set-up when necessary to assist the CA in properly handling the call.

DATES: Effective July 28, 2006.

ADDRESSES: Federal Communications Commission, 445 12th Street, SW., Washington DC 20554.

FOR FURTHER INFORMATION CONTACT: Thomas Chandler, Consumer & Governmental Affairs Bureau, Disability Rights Office at (202) 418–1475 (voice), (202) 418–0597 (TTY), or e-mail at *Thomas.Chandler@fcc.gov*.

SUPPLEMENTARY INFORMATION: This document does not contain new or modified information collection requirements subject to the PRA of 1995, Public Law 104–13. In addition, it does not contain any new or modified ''information collection burden for small business concerns with fewer than 25 employees,'' pursuant to the Small Business Paperwork Relief Act of 2002, Public Law 107–198, *see* 44 U.S.C. 3506 (c)(4). This is a summary of the Commission's document FCC 06–81, *Telecommunications Relay Services and Speech-to-Speech Services for Individuals with Hearing and Speech Disabilities*, Order, CG Docket No. 03–123, adopted June 12, 2006, released June 16, 2006, addressing issues raised in *Telecommunications Relay Services and Speech-to-Speech Services for Individuals with Hearing and Speech Disabilities*, Report and Order, Order on Reconsideration, CC Docket Nos. 90–571 and 98–67, CG Docket No. 03–123, published at 69 FR 53346, September 1, 2004.

The full text of document FCC 06–81 and copies of any subsequently filed documents in this matter will be

available for public inspection and copying during regular business hours at the FCC Reference Information Center, Portals II, 445 12th Street, SW., Room CY–A257, Washington, DC 20554. Document FCC 06–81 and copies of subsequently filed documents in this matter may also be purchased from the Commission's duplicating contractor at Portals II, 445 12th Street, SW., Room CY–B402, Washington, DC 20554. Customers may contact the Commission's duplicating contractor at its Web site *http://www.bcpiweb.com* or by calling 1–800–378–3160.

To request materials in accessible formats for people with disabilities (Braille, large print, electronic files, audio format), send an e-mail to *fcc504@fcc.gov* or call the Consumer & Governmental Affairs Bureau at (202) 418–0530 (voice), (202) 418–0432 (TTY). Document FCC 06–81 can also be downloaded in Word or Portable Document Format (PDF) at: *http://www.fcc.gov/cgb/dro*.

Synopsis

Background

The TRS rules, *see* 47 CFR 64.604 of the Commission's rules (the TRS ''mandatory minimum standards''), require that CAs stay with a call at least 10 minutes before transferring the call to another CA. 47 CFR 64.604(a)(1)(v) of the Commission's rules. This rule was adopted in the March 2000 *Improved TRS Order*. *See Telecommunications Relay Services and Speech-to-Speech Services for Individuals with Hearing and Speech Disabilities*, FCC 00–56, CC Docket 98–67, 15 FCC Rcd 5140, at 5168–5169, paragraphs 67–69 (March 6, 2000) (*Improved TRS Order*); published at 65 FR 38432, June 21, 2000 and 65 FR 38490, June 21, 2000. The 10-minute period begins when the calling party reaches the CA and they begin communicating. This rule is intended to reduce disruptions caused by in-call transfers and make the call more functionally equivalent to voice telephone calls. *Improved TRS Order*, 15 FCC Rcd at 5169, paragraph 68; *see also Telecommunications Relay Services and Speech-to-Speech Services for Individuals with Hearing and Speech Disabilities*, FCC 98–90, CC Docket No. 98–67, Notice of Proposed Rulemaking, 13 FCC Rcd 14187, 14211, at paragraph 61 (May 20, 1998); published at 63 FR 32798, June 16, 1998 (raising the 10-minute in-call replacement rule in NPRM). Its application to VRS, however, has raised concerns. Specifically, in the *2004 TRS Report and Order and FNPRM* the Commission noted that in some VRS calls ''the caller using ASL and the VRS CA may not be able to understand each other because, *e.g.*, each uses a different style of sign language,'' and therefore the call might be more effectively handled by a different CA. *2004 TRS Report and Order and FNPRM*, 19 FCC Rcd at 12569, paragraph 248. The Commission therefore sought comment on whether an exception to the 10-minute rule should apply in this context. *2004 TRS Report and Order and FNPRM,* 19 FCC Rcd at 12569, paragraph 248. Previously, the Commission adopted a different standard for Speech-to-Speech (STS) because of concerns unique to that service; in that case, it adopted a *longer* period of time. *See Improved TRS Order*, 15 FCC Rcd at 5170, paragraph 70.

The Commission also sought comment on whether VRS CAs should be permitted to ask questions to the VRS user during call set-up so that the VRS CA can gain an understanding of the nature of the call before the CA begins relaying the call. *2004 TRS Report and Order and FNPRM*, 19 FCC Rcd at 12569, paragraph 249. The Commission noted that because the role of the CA ''is to relay the call back and forth between the parties as a transparent entity, CAs generally may not ask questions to the initiating party about the call.'' *2004 TRS Report and Order and FNPRM*, 19 FCC Rcd at 12569, paragraph 249. The Commission further noted, however, that ''VRS [* * *] presents different challenges for CAs who have to deal with the complexities of sign language, including the fact that one sign can mean different things depending on the context.'' *2004 TRS Report and Order and FNPRM*, 19 FCC Rcd at 12569, paragraph 249. The Commission also sought comment on how, assuming VRS CAs are allowed to ask questions, the Commission could ensure that the VRS CA does not interfere with the independence of the VRS user should the caller choose not to answer the questions. *2004 TRS Report and Order and FNPRM*, 19 FCC Rcd at 12569, paragraph 249.

In response to these two issues, five comments, six reply comments, and one *ex parte* letter were filed. Comments were filed by the State of California and the California Public Utilities Commission (CA PUC) (October 18, 2004); Communication Services for the Deaf, Inc, (CSD) (October 18, 2004); Hands On Video Relay Services, Inc. (Hands On) (October 15, 2004); Sorenson Media, Inc. (Sorenson) (October 18, 2004); and Sprint Corporation (Sprint) (October 18, 2004). Reply comments were filed by CSD (November 15, 2004); and five individuals, Nancy Bender (October 20, 2004); Kathryn Bennett (October 20, 2004); Diana O'Toole (October 20, 2004); J. Powell (October 20, 2004); and Jennifer Sweeney (October 20, 2004). CSD also filed an *ex parte* letter addressed to Jay Keithley and Thomas Chandler of Consumer and Governmental Affairs (September 14, 2005). All commenters generally support allowing the replacement of the VRS CA if necessary to ensure effective communication. *See*, *e.g.*, CA PUC Comments at 17; CSD Comments at 32; Hands On Comments at 26; Sorenson Comments at 18; Sprint Comments at 12; CSD Reply Comments at 7; Nancy Bender; Kathryn Bennett; Diana O'Toole; J. Powell; and Jennifer Sweeney.

Commenters also generally support permitting the VRS CAs to ask questions to the VRS user during call set-up in order to ensure that the CA can effectively relay the conversation. CA PUC Comments at 17; CSD Comments at 33; Sorenson Comments at 18; Sprint Comments at 12; Kathryn Bennett; Diana O'Toole; J. Powell; and Jennifer Sweeney.

Discussion

The 10-Minute In-Call Replacement Rule

The Commission clarifies that if the party using sign language or the VRS CA find that they are not communicating effectively given the nature of the call, the VRS provider may have another CA handle the call without violating the 10-minute in-call replacement rule. The purpose of the rule is to prevent disruptions to a call and make the call more functionally equivalent to a voice telephone call. In this regard, the rule is principally intended for the benefit of the TRS user. At the same time, there may be VRS calls during which the party using sign language, the CA, or both, find that they are unable to communicate effectively because of regional dialect differences, lack of knowledge about a particular subject matter (*e.g.*, a technical or complex subject matter), or other reason. In these circumstances, when effective communication is not occurring, the Commission concludes that the 10-minute in-call replacement rule is not violated if the VRS provider has another CA take over the call. The Commission emphasizes that this exception to the 10-minute rule does not permit VRS providers and CAs to switch CAs within the 10-minute time period for other reasons unrelated to the ability to effectively communicate in sign language. For example, the VRS

provider may not switch CAs within the 10-minute time period simply because the CA might *prefer* not to handle a call with a particular subject matter or a call made by a particular consumer.

VRS CAs Asking Questions

The Commission clarifies that, consistent with the TRS rules, the VRS CA may ask a VRS caller questions during call set-up when necessary to ensure that the CA can effectively handle the call. The Commission recognizes that in some circumstances the complexity of sign language may make it difficult for the CA to effectively relay the call if the CA does not understand the subject matter or context of the call. For example, the sign for ''Congress,'' Commission,'' ''committee,'' and ''council'' is the same, and therefore the context of the conversation dictates which of these words would be voiced by the CA. In addition, the Commission understands that it is universal practice in the interpreting profession to ask customers questions prior to an assignment in order to better facilitate effective communication. *See http://www.deaflinx.com/useterp.html*, ''Working with an ASL-English Interpreter.'' *See also http://www.rid.org/125.pdf*, ''RID Standard Practice Paper on Interpreting in legal settings.'' As the Commission has noted, one sign can have different meanings depending on the context. *2004 TRS Report and Order and FNPRM*, 19 FCC Rcd at 12569, paragraph 249; *see also* note 31. Further, no commenters oppose allowing the VRS CA to ask questions during the call set-up. For these reasons, the Commission finds that VRS CAs may ask questions to the calling party during call set-up when necessary to ensure effective communication between the VRS CA and the VRS user. At the same time, the Commission adds that if the VRS user declines to answer the questions, the CA must proceed with the call. *See* 47 CFR 64.604(a)(3)(i) of the Commission's rules (prohibiting a TRS provider from refusing any calls).

Final Regulatory Flexibility Certification

The Regulatory Flexibility Act of 1980, as amended (RFA) requires that a regulatory flexibility analysis be prepared for rulemaking proceedings, unless the agency certifies that ''the rule will not have a significant economic impact on a substantial number of small entities.'' The RFA, *see* 5 U.S.C. 601–612, has been amended by the Contract with America Advancement Act of 1996, Public Law Number 104–121, 110 Statute 847 (1996) (CWAAA). Title II of the CWAAA is the Small Business Regulatory Enforcement Act of 1996 (SBREFA). The RFA generally defines ''small entity'' as having the same meaning as the terms ''small business,'' ''small organization,'' and ''small governmental jurisdiction.'' 5 U.S.C. 605(b). In addition, the term ''small business'' has the same meaning as the term ''small business concern'' under the Small Business Act. 5 U.S.C. 601(3) (incorporating by reference the definition of ''small business concern'' in the Small Business Act, 5 U.S.C. 632). Pursuant to 5 U.S.C. 601(3), the statutory definition of a small business applies ''unless an agency, after consultation with the Office of Advocacy of the Small Business Administration and after opportunity for public comment, establishes one or more definitions of such term which are appropriate to the activities of the agency and publishes such definition(s) in the **Federal Register**.'' A ''small business concern'' is one which: (1) Is independently owned and operated; (2) is not dominant in its field of operation; and (3) satisfies any additional criteria established by the Small Business Administration (SBA). 15 U.S.C. 632.

This *Order* addresses two issues raised in the FNPRM in the *2004 TRS Report and Order and FNPRM*: (1) Whether an exception should be made to the 10-minute in-call replacement rule for VRS if the calling party using ASL and the VRS CA find that they are not communicating effectively given the nature of the call, permitting the VRS provider to have a new CA handle the call; and (2) whether a VRS CA should be permitted to ask the VRS user questions during call set-up when necessary to assist the CA in properly handling the call. Given the complexity of sign language, the Commission concludes that the public interest is best served by permitting a VRS provider to have another CA handle the call if a CA cannot effectively communicate with the calling party, and by permitting a VRS CA to ask questions to the calling party during call set-up when necessary to gain an understanding of the nature of the call to ensure effective communication. Because this *Order* addresses only how VRS CAs may handle VRS calls in particular circumstances, the Commission certifies that the requirements of the *Order* will not have a significant economic impact on a substantial number of small entities.

The Commission also notes that, arguably, there are not a substantial number of small entities that will be affected by our action. The SBA has developed a small business size standard for Wired Telecommunications Carriers, which consists of all such firms having 1,500 or fewer employees. 13 CFR 121.201, NAICS code 517110. According to Census Bureau data for 1997, there were 2,225 firms in this category which operated for the entire year. U.S. Census Bureau, 1997 Economic Census, Subject Series: Information, ''Establishment and Firm Size (Including Legal Form of Organization),'' Table 5, NAICS code 513310 (issued Oct. 2000). Of this total, 2,201 firms had employment of 999 or fewer employees, and an additional 24 firms had employment of 1,000 employees or more. Thus, under this size standard, the majority of firms can be considered small. (The census data do not provide a more precise estimate of the number of firms that have employment of 1,500 or fewer employees; the largest category provided is ''Firms with 1,000 employees or more''). Currently, only eight providers are providing VRS and being compensated from the Interstate TRS Fund: AT&T Corp.; Communication Access Center for the Deaf and Hard of Hearing, Inc.; Hamilton Relay, Inc.; Hands On; MCI; Nordia Inc.; Sorenson; and Sprint. The Commission notes that two of the providers noted above are small entities under the SBA's small business size standard. In addition, the Interstate TRS Fund Administrator is the only entity that compensates eligible providers of VRS. Under these circumstances, the Commission concludes that the number of small entities affected by its decision in this *Order* is not substantial. The Commission will send a copy of this *Order*, including a copy of this Regulatory Flexibility Certification, to the Chief Counsel for Advocacy of the SBA. 5 U.S.C. 605(b).

Congressional Review Act

The Commission will not send a copy of the *Order* pursuant to the Congressional Review Act, *see* 5 U.S.C. 801(a)(1)(A), because the adopted rules are rules of particular applicability.

Ordering Clauses

Pursuant to the authority contained in Sections 1, 2, and 225 of the Communications Act of 1934, as amended, 47 U.S.C. 151, 152, and 225, the *Order* is hereby *adopted*.

The *Order* shall be effective July 28, 2006.

The Commission will send a copy of the *Order*, including a copy of this Regulatory Flexibility Certification, to the Chief Counsel for Advocacy of the SBA.

Federal Communications Commission.

Marlene H. Dortch,

Secretary.

[FR Doc. 06–5845 Filed 6–27–06; 8:45 am]

BILLING CODE 6712–01–P

FEDERAL COMMUNICATIONS COMMISSION

47 CFR Part 73

[DA 06–1228; MB Docket No. 04–361; RM–11074]

Radio Broadcasting Services; Portales and Roswell, NM

AGENCY: Federal Communications Commission.

ACTION: Final rule.

SUMMARY: At the request of Dana J. Puopolo this document allots Channel 237C0 at Roswell, New Mexico, as the community's thirteenth local transmission service, and at the request of Rooney Moon Broadcasting, Inc., grants the application File No. BPH–20040426AAJ, substituting Channel 290C1 for Channel 237A at Portales, New Mexico. Channel 237C0 is allotted at Roswell at a site 29.1 kilometers (18.1 miles) northwest of the community at coordinates 33–31–30 NL and 104–47–56 WL. Channel 290C1 is allotted at Portales at a site 5.5 kilometers (3.4 miles) east of the community at coordinates 34–11–34 NL and 103–16–44 WL.

DATES: Effective July 24, 2006.

ADDRESSES: Secretary, Federal Communications Commission, 445 12th Street, S.W., Room TW–A325, Washington, DC 20554.

FOR FURTHER INFORMATION CONTACT: Victoria M. McCauley, Media Bureau, (202) 418–2180.

SUPPLEMENTARY INFORMATION: This is a summary of the Commission's *Report and Order,* MB Docket No. 04–361, adopted June 7, 2006, and released June 9, 2006. The *Notice of Proposed Rule Making,* 69 FR 57897, September 28, 2004, was issued at the request of Dana J. Puopolo. The full text of this Commission decision is available for inspection and copying during normal business hours in the Commission's Reference Information Center, 445 Twelfth Street, SW., Washington, DC 20554. The complete text of this decision may also be purchased from the Commission's duplicating contractor, Best Copy and Printing, Inc., 445 12th Street, SW., Room CY–B402, Washington, DC, 20054, telephone 800–378–3160 or *http://www.BCPIWEB.com.*

The Commission will send a copy of this *Report and Order* in a report to be sent to Congress and the Government Accountability Office pursuant to the Congressional Review Act, *see* 5 U.S.C. 801(a)(1)(A).

List of Subjects in 47 CFR Part 73

Radio, Radio broadcasting.

■ As stated in the preamble, the Federal Communications Commission amends 47 CFR part 73 as follows:

PART 73—RADIO BROADCAST SERVICES

■ 1. The authority citation for part 73 continues to read as follows:

Authority: 47 U.S.C. 154, 303, 334, 336.

§ 73.202 [Amended]

■ 2. Section 73.202(b), the Table of FM Allotments under New Mexico, is amended by removing Channel 237A and adding 290C1 at Portales, and adding Channel 237C0 at Roswell.

Federal Communications Commission.

John A. Karousos,

Assistant Chief, Audio Division, Media Bureau.

[FR Doc. 06–5846 Filed 6–27–06; 8:45 am]

BILLING CODE 6712–01–P

FEDERAL COMMUNICATIONS COMMISSION

47 CFR Part 73

[DA 06–1229; MB Docket No. 05–304; RM–11230]

Radio Broadcasting Services; Garwood, TX

AGENCY: Federal Communications Commission.

ACTION: Final rule.

SUMMARY: The Audio Division, at the request of Charles Crawford, allots Channel 247A at Garwood, Texas, as the community's first local FM service. Channel 247A can be allotted to Garwood, Texas, in compliance with the Commission's minimum distance separation requirements with a site restriction of 15.0 km (9.3 miles) northwest of Garwood. The coordinates for Channel 247A at Garwood, Texas, are 29–33–29 North Latitude and 96–29–12 West Longitude. The allotment is subject to the final outcome of MM Docket No. 00–148, in which proposals conflicting with this allotment were dismissed. *See* **SUPPLEMENTARY INFORMATION** *infra.*

DATES: Effective July 24, 2006.

FOR FURTHER INFORMATION CONTACT: Deborah Dupont, Media Bureau, (202) 418–7072.

SUPPLEMENTARY INFORMATION: This is a synopsis of the Commission's *Report and Order,* MB Docket No. 05–304, adopted June 7, 2006, and released June 9, 2006. The full text of this Commission decision is available for inspection and copying during normal business hours in the FCC Information Center, Portals II, 445 12th Street, SW., Room CY–A257, Washington, DC 20554. The complete text of this decision also may be purchased from the Commission's duplicating contractor, Best Copy and Printing, Inc., 445 12th Street, SW., Room CY–B402, Washington, DC, 20554, (800) 378–3160, or via the company's Web site, *http://www.bcpiweb.com.* The Commission will send a copy of this *Report and Order* in a report to be sent to Congress and the Government Accountability Office pursuant to the Congressional Review Act, *see* U.S.C. 801(a)(1)(A).

List of Subjects in 47 CFR Part 73

Radio, Radio broadcasting.

■ As stated in the preamble, the Federal Communications Commission amends 47 CFR Part 73 as follows:

PART 73—RADIO BROADCAST SERVICES

■ 1. The authority citation for part 73 continues to read as follows:

Authority: 47 U.S.C. 154, 303, 334, 336.

§ 73.202 [Amended]

■ 2. Section 73.202(b), the Table of FM Allotments under Texas, is amended by adding Garwood, Channel 247A.

Federal Communications Commission.

John A. Karousos,

Assistant Chief, Audio Division, Media Bureau.

[FR Doc. 06–5850 Filed 6–27–06; 8:45 am]

BILLING CODE 6712–01–P

DEPARTMENT OF COMMERCE

National Oceanic and Atmospheric Administration

50 CFR Part 679

[Docket No. 060223050–6162–02; I.D. 013006I]

RIN 0648–AT09

Fisheries of the Exclusive Economic Zone Off Alaska; Groundfish, Crab, Salmon, and Scallop Fisheries of the Bering Sea and Aleutian Islands Management Area and Gulf of Alaska

AGENCY: National Marine Fisheries Service (NMFS), National Oceanic and

DEPARTMENT OF COMMERCE

National Oceanic and Atmospheric Administration

50 CFR Part 679

[Docket No. 060223050–6162–02; I.D. 013006I]

RIN 0648–AT09

Fisheries of the Exclusive Economic Zone Off Alaska; Groundfish, Crab, Salmon, and Scallop Fisheries of the Bering Sea and Aleutian Islands Management Area and Gulf of Alaska

AGENCY: National Marine Fisheries Service (NMFS), National Oceanic and Atmospheric Administration (NOAA), Commerce.

ACTION: Final rule.

SUMMARY: NMFS issues a final rule implementing Amendments 78 and 65 to the Fishery Management Plan (FMP) for Groundfish of the Bering Sea and Aleutian Islands Management Area (BSAI), Amendments 73 and 65 to the FMP for Groundfish of the Gulf of Alaska (GOA), Amendments 16 and 12 to the FMP for Bering Sea/Aleutian Islands King and Tanner Crabs, Amendments 7 and 9 to the FMP for the Scallop Fishery off Alaska, and Amendments 7 and 8 to the FMP for Salmon Fisheries in the Exclusive Economic Zone off the Coast of Alaska. These amendments revise the FMPs by identifying and describing essential fish habitat (EFH), designating habitat areas of particular concern (HAPC), and include measures to minimize to the extent practicable adverse effects on EFH. This action is necessary to protect important habitat features to sustain managed fish stocks.

DATES: Effective on July 28, 2006.

ADDRESSES: Copies of the maps of EFH and HAPC management areas, the Environmental Impact Statement (EIS) for EFH Identification and Conservation, the Environmental Assessment/Regulatory Impact Review/Initial Regulatory Flexibility Analysis (EA/RIR/IRFA) for HAPC and the Final Regulatory Flexibility Analysis (FRFA) for this action may be obtained from NMFS, Alaska Region, Attn: Ellen Walsh, Records Officer, P.O. Box 21668, Juneau, AK 99802, or from the Alaska Region NMFS Web site at *http://www.fakr.noaa.gov.*

Written comments regarding the burden-hour estimates or other aspects of the collection-of-information requirements contained in this final rule may be submitted to NMFS, Alaska Region, and by e-mail to *David_Rostker@omb.eop.gov*, or fax to (202) 395–7285.

FOR FURTHER INFORMATION CONTACT: Melanie Brown, 907–586–7228 or e-mail at *melanie.brown@noaa.gov.*

SUPPLEMENTARY INFORMATION: The groundfish, crab, scallop, and salmon fisheries in the exclusive economic zone (EEZ) off Alaska are managed under their respective FMPs. The North Pacific Fishery Management Council (Council) prepared the FMPs under the authority of the Magnuson-Stevens Fishery Conservation and Management Act (Magnuson-Stevens Act), 16 U.S.C. 1801, *et seq.* Regulations implementing the FMPs appear at 50 CFR parts 679 and 680. General regulations governing U.S. fisheries also appear at 50 CFR part 600.

The Secretary of Commerce approved the FMP amendments for EFH and HAPC identification and conservation on May 3, 2006.

Background

Detailed information on the history of EFH requirements in the Magnuson-Stevens Act, litigation regarding EFH, gear effects on bottom habitat, Council actions, and summary of the EFH and HAPC amendments to Alaska fisheries FMPs implemented by this final rule are in the preamble to the proposed rule (71 FR 14470, March 22, 2006).

Regulatory Amendments

A description of the regulatory amendments to implement provisions for EFH and HAPC management follows.

Section 679.2 Definitions

The final rule revises the definition of ''authorized fishing gear'' to add dredge gear. This definition is necessary to establish restrictions on this gear type in habitat protection areas (HPAs) and habitat conservation zones (HCZs). To ensure consistency between the Federal and State of Alaska (State) regulations for the management of the scallop fishery, the final rule adds a definition for dredge that is the same as the State's definition at 5 Alaska Administrative Code 39.105(16).

To identify groups of gear for the purposes of EFH and HAPC management measures, the categories of bottom contact gear and mobile bottom contact gear are added to the authorized fishing gear definition. The definition for bottom contact gear lists dredge, hook-and-line, nonpelagic trawl, dinglebar, and pot gears. The definition for mobile bottom contact gear lists dredge, nonpelagic trawl, and dinglebar gears.

The final rule defines each management area established to protect EFH and HAPC. The definitions for the habitat conservation areas (HCAs), HPAs, and HCZs provide the names of the management areas and refer to tables in 50 CFR part 679 for the coordinates of each area to ensure accurate descriptions.

The final rule adds a definition for ''federally permitted vessel'' for purposes of the fishing restrictions in the HCAs, HPAs, and HCZs and for vessel monitoring systems (VMS). Federally permitted vessels are those vessels named on either a groundfish Federal fishing permit (FFP) or a Federal crab vessel permit (FCVP). These types of permits were identified for this purpose because they are required for anyone fishing for groundfish or crab species in the EEZ, are easily obtained compared to other types of Federal fishing permits that require catch history, and can be easily relinquished and reissued. The ability to easily relinquish and reissue the groundfish FFPs and FCVPs provides the fisher the flexibility to choose whether to participate in activities that require compliance with the EFH and HAPC restrictions and VMS requirements. This new definition ensures the EFH and HAPC provisions do not apply to vessels named only on other types of federal fishing permits.

The final rule adds a definition of ''operate a vessel'' for the purpose of describing when a VMS is required to be transmitting. A vessel is operating any time it is offloading or processing fish; is in transit to, from, or between the fishing areas; or is fishing or conducting operations in support of fishing.

Section 679.4 Permits

Currently, license limitation permits (LLPs) are issued for fishing groundfish in the GOA with a trawl, non-trawl, or both trawl and non-trawl gear endorsements. The Council recommended that vessels named on an LLP with a trawl endorsement be allowed to use non-trawl gear to fish for slope rockfish within the Gulf of Alaska Slope Habitat Conservation Areas (GOASHCAs). The final rule revises paragraph (k)(3)(iv)(A) to allow vessels named on an LLP with a trawl endorsement to use non-trawl gear to fish for slope rockfish within the GOASHCAs. This revision provides some accommodation to vessels named on an LLP endorsed only for trawl gear, if the operator is willing to use non-trawl gear to fish for slope rockfish within the GOASHCA.

Section 679.7 Prohibitions

The current pelagic trawl performance standard does not apply to the Community Development Quota (CDQ) pollock fishery. To ensure all directed fishing for pollock follows the performance standard at § 679.7(a)(14), the final rule revises the prohibition to make it applicable to all pollock directed fisheries. Background on the CDQ pollock fishery and the trawl performance standard is detailed in the proposed rule (71 FR 14470, March 22, 2006).

To ensure all directed fishing for pollock is conducted using pelagic trawl gear that meets the performance standard at § 679.7(a)(14), the final rule revises this prohibition to delete the word ''non-CDQ,'' thereby making the prohibition applicable to all pollock directed fisheries. This revision ensures that all directed fishing for pollock in the BSAI is conducted with pelagic trawl gear in a manner that has less potential impact on bottom habitat.

A new paragraph (a)(20) is added to prohibit the anchoring of any federally permitted fishing vessel in an HPA. This prohibition applies to any vessel named on an FFP or FCVP. Anchoring may disturb bottom habitat during deployment and retrieval of the anchor and is included in those activities that are prohibited in these fragile and sensitive bottom habitat areas.

The final rule also adds two new paragraphs (a)(21) and (22) to address the VMS requirements for EFH and HAPC management. Paragraph (a)(21) prohibits all vessels named on an FFP or FCVP from operating in the Aleutian Islands subarea without an operable VMS and without complying with the requirements at § 679.28. Paragraph (a)(22) prohibits all vessels named on an FFP or FCVP from operating in the GOA with mobile bottom contact gear on board without an operable VMS and without complying with the requirements at § 679.28.

Section 679.22 Closures

The final rule adds fishing closures in the BSAI and GOA. Paragraph (a)(12) is revised, and paragraphs (a)(13), (a)(14), and (a)(15) are added to the closures listed for the BSAI to include the Aleutian Islands Coral Habitat Protection Areas (AICHPAs), Aleutian Islands Habitat Conservation Area (AIHCA), Bowers Ridge Habitat Conservation Zone (BRHCZ), and Alaska Seamount Habitat Protection Areas (ASHPAs), respectively. The final rule adds new paragraphs (b)(8), (b)(9), and (b)(10) to the closures listed for the GOA to include the Gulf of Alaska Coral Habitat Protection Areas (GOACHPAs), GOASHCAs, and ASHPAs, respectively. Portions of the ASHPAs occur in both the BSAI and GOA. Therefore, the closures for these HPAs are addressed under both management areas. Each new paragraph refers to the respective new table in 50 CFR part 679 that contains the coordinates for that management area. The final rule prohibits fishing with bottom contact gear by federally permitted vessels in the HPAs. It also prohibits fishing with nonpelagic trawl gear in the HCAs and fishing in the HCZ with mobile bottom contact gear.

Section 679.24 Gear Limitations

Existing gear limitations prohibit the use of nonpelagic trawl gear for the directed fishing of non-CDQ pollock in the BSAI. Directed fishing for CDQ pollock was not included in this prohibition for the same reasons stated in the proposed rule (71 FR 14470, March 22, 2006) for the trawl performance standard pursuant to § 679.7(a)(14)(i). To ensure all directed fishing for pollock is conducted with pelagic trawl gear that meets the trawl performance standard, the final rule revises paragraph (b)(4) to remove the term ''non-CDQ.'' This revision prevents potential opportunistic use of nonpelagic trawl gear for pollock harvest in any CDQ trawl fishery, ensuring that all directed fishing for pollock is conducted with pelagic trawl gear that must meet the trawl performance standard and that is less likely to impact bottom habitat.

Section 679.28 Equipment and Operational Requirements

The final rule revises paragraph (f)(3)(iv) to clarify when a vessel operator must stop fishing because of VMS transmission problems. The paragraph currently specifies that fishing must stop if the vessel operator is informed by NMFS that the VMS is not transmitting properly. The final rule further requires that fishing must stop if the vessel operator determines that the VMS is not transmitting properly. This revision ensures that fishing is stopped as soon as possible after either NMFS or the vessel operator determines that the VMS is not functioning properly.

The final rule also revises paragraph (f)(6) to clarify when a VMS must be transmitting for all vessels that are required to have a VMS. For purposes of EFH and HAPC management, the final rule requires VMS transmission while a vessel is operating in the Aleutian Islands subarea or while a vessel is operating in the GOA with mobile bottom contact gear on board.

Tables to 50 CFR Part 679

The final rule adds six new tables to 50 CFR part 679 to identify and describe the EFH and HAPC management areas that are defined in § 679.2 and closed to certain gear types in § 679.22 or anchoring under § 679.7. Each table lists the individual sites by name and number within each management area and provides the coordinates needed to locate the boundaries of each site. These tables are necessary to ensure that the fishery participants and State and Federal enforcement staff are able to identify those areas that are restricted to fishing activities.

Comments and Responses

NMFS received 11 comment letters on the proposed rule that contained 19 separate comments. The following summarizes and responds to these comments.

Comment 1: The **Federal Register** notice of the FMP amendments is hard to understand and should be rewritten and published. The agency is attempting to mislead the public.

Response: The FMP amendments are large and complex changes to five FMPs. NMFS provided a concise summary of each of the changes to the FMPs in the **Federal Register** notice (71 FR 6031, February 6, 2006). In that notice, the public was provided the name, phone number and e-mail address of a contact person and a Web site where additional information is available if a proposed action is not explained to a reader's satisfaction. The **Federal Register** notice of availability of the FMP amendments provided sufficient information to the public and additional sources of information for more details. The notice will not be republished.

Comment 2: NMFS has conflicts of interest by financing fishing vessels and receiving profits from fishing activities. The public loses when NMFS lets the commercial fishing industry run rampant over the nation's resources.

Response: The Magnuson-Stevens Act does provide for a Fisheries Finance Program that makes long-term fisheries loans for vessels and shoreside facilities. NMFS receives no financial support from fishing activities, except to recover the costs of administration for certain programs such as the individual fishing quota program for halibut, sablefish, and crab. NMFS disagrees that these programs create a conflict of interest. The FMP amendments for EFH and HAPC will result in restrictions on fishing activities to preserve our nation's marine resources.

Comment 3: In general, we support the Council's recommendations and the

Secretary of Commerce's approval of the FMP amendments and their implementing regulations.

Response: Support is noted.

Comment 4: The EFH EIS supports status quo for the GOA and the Bering Sea. The Aleutian Islands subarea has high coral density, highly repetitive fishing patterns, and extensive areas that have not been trawled, unlike the GOA and Bering Sea. We agree with the Council's recommended protection measures for the Aleutian Islands subarea.

Response: Support is noted. Even though the EFH EIS determined that the impacts of fishing on EFH in these management areas are no more than minimal, the Council and NMFS have the authority to implement measures necessary for the conservation and management of fishery resources, including precautionary measures to protect EFH. The Council recommended new conservation measures for EFH in the Aleutian Islands and GOA, but deferred any new conservation measures for the Bering Sea pending additional analysis.

Comment 5: The State of Alaska recently took emergency action to protect the AICHPAs. We encourage the Council and NMFS to continue to work with the State of Alaska to implement other EFH and HAPC protection measures in the proposed rule.

Response: Once the EFH and HAPC regulations are finalized, NMFS and the Council will work with the State of Alaska to develop parallel closures in State waters and fisheries. This issue is scheduled for review by the State of Alaska Board of Fisheries in October 2006.

Comment 6: In the preamble to the proposed rule, the comparison of the effect of pelagic and nonpelagic trawl gears on the bottom is not accurate. All components of a nonpelagic trawl are designed to contact the bottom, whereas only the bosom of the footrope of a pelagic trawl is likely to contact the bottom. The comparison should not use the words ''as aggressively'' to describe the type of impact of these two gear types on bottom habitat.

Response: NMFS appreciates the commenter's more descriptive comparison of the bottom contact of pelagic and nonpelagic trawl gear. The comparison in the proposed rule was intended to be general and indicate that pelagic trawl gear has less contact and potentially fewer impacts than nonpelagic trawl gear.

Comment 7: The use of the term off-bottom mode in describing fishing with pelagic trawl gear is misleading. The trawl performance standards (§ 679.7(a)(14)) and the gear limitations in the GOA (§ 679.24(b)(4)) are established to ensure pelagic trawl gear is operated in a manner that is less likely to impact the bottom. The performance standard and gear limitation do not preclude the pelagic trawl from contacting the bottom. The public may have assumed that the proposed rule included an off-bottom mode standard for pelagic trawl. Any statement in the final rule regarding fishing for pollock with pelagic gear should not include the phrase off-bottom mode and only should use the pelagic trawl gear performance standard and gear limitation, as specified in the regulations.

Response: NMFS agrees with the comments and has incorporated the requested language.

Comment 8: The performance standards for pelagic trawl gear are inadequate to prevent seafloor habitat impacts in the AICHPAs, the BRHCZ and the ASHPAs. Although trawling within the performance standard is characterized as off-bottom mode, the standard could allow for significant seafloor impacts. A stronger performance standard is needed to prevent pelagic trawl gear from impacting these sensitive habitats through bottom contact. In the BSAI, the pelagic trawl performance standard based on crabs is not indicative of the lack of habitat impacts and does not provide adequate controls on pelagic trawling in EFH and HAPC management areas. The footrope may be contacting the floor even though crabs may not be observed by being retained in the net. The GOA gear limitation allowing pelagic trawl gear contact of the bottom for no more than 10 percent of the tow could result in large areas being impacted as some tows may extend for several miles. A footrope contacting the bottom may be particularly damaging to animals anchored on or residing in the upper sediments of the seafloor. The Council recommended prohibiting the use of pelagic trawl gear that contacts the bottom in areas where bottom contact gear is prohibited. They also recommended the use of pelagic trawl gear in an off-bottom mode in the AIHCA. A more stringent and enforceable performance standard is needed to ensure pelagic trawl gear is operated in a manner that does not contact the bottom in areas where bottom contact gear is prohibited and to ensure operation without bottom contact in areas where pelagic trawl gear in an off-bottom mode is allowed.

Response: See comment 7. NMFS agrees that the current performance standard in the BSAI and gear limitation in the GOA for pelagic trawl gear do not eliminate the possibility that pelagic trawl gear may contact the bottom. However, the EFH EIS determined that given the location and use of pelagic trawl gear in the Aleutian Islands subarea and GOA, no impact on habitat was likely to occur (see **ADDRESSES**). The Aleutian Islands subarea and GOA areas protected by this final rule are comprised of either very deep waters or rocky substrate that fishers using pelagic trawl gear avoid. Thus, this final rule provides adequate assurance that pelagic trawl gear fisheries would not adversely impact protected habitat areas in the Aleutian Islands subarea and GOA.

The EFH EIS determined that pelagic trawl gear is likely to contact soft bottom substrate that is prevalent in the Bering Sea. The Council is reevaluating the potential effects of fishing on Bering Sea habitat. If fishing activities are determined to affect Bering Sea habitat, the Council may recommend protection measures. The development of any protection measures likely would include evaluation of the current pelagic trawl gear performance standard and whether the current standard would meet Council objectives for protection of habitat in the Bering Sea.

Comment 9: NMFS' conclusion that the effects of fishing on EFH are no more than minimal and temporary is fundamentally incorrect and based on an unlawful analysis and standard. The conclusion of adverse impact should not be dependent on identifying the decline in productivity of a managed species. The Council's Scientific and Statistical Committee and the Center for Independent Experts told the Council and NMFS that this was too high a standard for which scientific information is missing. The adverse effects of fishing on EFH must be minimized to the extent practical.

Response: NMFS responded to the commenter's concerns about the analysis of the effects of fishing on EFH in Appendix L to the final EFH EIS. In summary, NMFS appropriately considered the productivity of managed species to assess whether habitat disturbance caused by fishing reduces the capacity of EFH to support those species. In the final EIS, NMFS reevaluated the effects of fishing on EFH and examined whether stock status and trends indicate any potential influence of habitat disturbance due to fishing. The analysis considered whether credible evidence exists to support a conclusion that disturbance to EFH caused by fishing reduces the capacity of EFH to support managed species. The analysis indicated that there are long-

term effects of fishing on benthic habitat features, yet the effects on EFH are minimal because NMFS found no indication that continued fishing activities at the current rate and intensity alter the capacity of EFH to support healthy populations of managed species over the long term.

Comment 10: We have two concerns regarding the closures in Southeast Alaska to all bottom contact gear: (1) Little information exists documenting negative fixed gear impacts in this area and (2) the proposed regulations contradict the statutory language which recommends closure areas to be in pristine or undisturbed state. Data indicate that extensive and historic fixed gear effort has occurred in Southeast Alaska. Southeast Alaska should be designated for research purposes only because bottom trawling is prohibited in Southeast Alaska and fixed gear has been used in this area for nearly a century without damaging coral or sponge habitat. We appreciate NMFS' efforts to establish closure areas that include only identified sensitive habitat without surrounding productive fishing grounds.

Response: The GOACHPAs located in Southeast Alaska were developed based on *in situ* submersible observations by NOAA scientists who documented the presence of unusually dense thickets of red tree corals. These corals are large, branching, fragile, and very slow growing structures that enhance the complexity of bottom habitats. They are susceptible to physical disturbance from fishing gear that comes in contact with them, including fixed gear. As discussed in the EA/RIR/IRFA (see **ADDRESSES**), longline gear can lie slack and meander along the bottom. During retrieval, the gear can snag on rocks and corals, resulting in corals that are broken, tipped over, or dragged along the sea floor. The areas identified for closure are relatively undisturbed, and the purpose of the closures is to prevent potential future disturbance to those habitat features. The closure areas were identified with active participation from the fishing industry, and the size of the closures was reduced in response to that input. The applicable statutory language for addressing the effects of fishing on habitat is in section 303(a)(7) of the Magnuson-Stevens Act, which requires that fishery management plans ''minimize to the extent practicable the adverse effects of fishing on [EFH].'' Such areas do not have to be in a pristine or undisturbed state, as suggested by the commenter.

Comment 11: VMS is a necessary tool for enforcement, fisheries management, and to increase fishing opportunities. VMS is useful for large vessels fishing over vast areas but is not appropriate for small vessels operating in densely fished areas like Southeast Alaska. NMFS should investigate ways to ease the cost of VMS, especially for small vessels. Difficulties in implementing VMS should not delay the implementation of the EFH and HAPC regulations.

Response: In the GOA, VMS requirements in this rule apply only to vessels with an FFP or FCVP and mobile bottom contact gear on board. NMFS agrees that implementation of the EFH and HAPC regulations should not be delayed by difficulties in implementing VMS and that VMS is a necessary tool for fisheries management and enforcement. VMS is useful for tracking vessel locations for small and large vessels. VMS is important for enforcing EFH protection areas, which are impacted more by the gear type than the vessel size. The FRFA analysis shows that in most instances, the cost of VMS is reasonable for small vessels. Some vessels may have a very small portion of their income derived from fishing activities that require VMS, making the cost of VMS higher relative to the revenue from those fishing activities. It is up to the vessel owner and operator to determine if the income from a fishing activity requiring VMS justifies the expense for the VMS. In the past, NMFS has purchased VMS units for some participants in the groundfish fisheries. For fiscal year 2006, NMFS has a national VMS reimbursement program for vessel owners who are required by regulations promulgated in 2006 to install and operate a VMS unit for the first time. The details of this program will be available in late summer 2006 through the Alaska Region Web site at *http://www.fakr.noaa.gov.*

Comment 12: The legal, enforcement, and conservation concerns regarding VMS on small vessels need to be resolved before implementing the requirement. What happens if the technology fails? For example, what happens if the VMS fails while the vessel is fishing? Would the vessel be required to stop fishing and leave gear on the grounds while returning to port for repair work? Gear left on the grounds could result in lost gear or significant dead loss and the fishers would experience loss of fishing time while waiting for repairs. Jarring of the VMS unit on small vessels in poor weather may make the unit more likely to break down. In Southeast Alaska, repair locations are limited.

Response: This final rule revises § 679.28(f)(3)(iv) to require the vessel operator to stop fishing if either the operator or NMFS personnel determine that the VMS is not working properly. Further actions required of a vessel with a failed VMS unit depend on the situation, and the operator is encouraged to contact the NOAA Office of Law Enforcement immediately to determine the appropriate action. NMFS does not expect the jarring of VMS units on small vessels to result in a rate of equipment malfunction any higher than the failure rate of any other device with an antenna and wires onboard.

Comment 13: Approximately 80 percent of the vessels holding halibut IFQ complete their quota fishing in one or two trips and many would never go more than 3 nautical miles from shore. A large majority of these vessels are less than 60 feet (18.3 m) length overall (LOA) and most commonly are 40 foot (12.3 m) LOA longline-troll gear vessels. Requiring VMS for these vessels would be an unsupported and unjustified expense. This requirement would likely result in significant legal and conservation problems. We oppose the VMS requirement on small vessels, especially in Southeast Alaska where enforcement opportunities are high.

Response: See response to comment 11. The VMS requirement in the GOA does not include longline-troll gear vessels. Small vessels using mobile bottom contact gear (nonpelagic trawl, dredge, or dinglebar gears) could possibly adversely affect the GOACHPAs. VMS is the most effective method to ensure any fishing by these vessels in EFH and HAPC protection areas is detected.

Comment 14: We oppose further imposition of VMS in fisheries management plans. No one has demonstrated the need for VMS to meet enforcement goals. If VMS is required, NMFS must bear the cost of acquisition, installation, maintenance, and broadcast or user fees.

Response: See responses to Comments 11 and 12.

Comment 15: We oppose the use of VMS as an enforcement tool for EFH and HAPC areas. During the rule development for the GOACHPAs, we were under the impression that longline fisheries would be exempt from VMS requirements. Also, we thought that dinglebar gear should have been exempted because the effects on bottom habitat are no more than minimal, the fishery is small and of a short duration, the FFP can be surrendered so the vessel is exempt from VMS requirements, and these vessels do not fish in GOACHPAs. A year round VMS requirement for dinglebar vessels (usually less than 60 feet (18.3 m) LOA) that participate in a short duration fishery is burdensome.

Dinglebar gear vessels should be exempt from VMS requirements because the impact on the GOA EFH of approximate four dinglebar gear vessels is likely less than the longline fleet which is exempt from VMS. VMS is not needed for dinglebar gear vessels because the closure areas are mostly too deep to be fished by this gear type. Fishers have avoided the proposed protection areas in the past and are unlikely to fish these areas in the future. Enforcement tools for the GOACHPAs should be developed by working with the potentially affected vessels owners and operators.

Response: The EFH EIS notes that mobile bottom tending fishing gears have the greatest potential adverse effects on sensitive seafloor habitat features. Dinglebar gear has fewer potential adverse effects than certain other bottom tending mobile gears, such as bottom trawls. As described in the EA/RIR/IRFA (*see* **ADDRESSES**), dinglebar gear has a heavy weight deployed near the bottom in fisheries that target groundfish, such as lingcod throughout Southeast Alaska. This gear type has the potential to disturb sensitive bottom habitats. In the final EIS, NMFS proposed requiring the use of VMS on all fishing vessels with bottom contact gear in the GOA to ensure adequate enforcement. Following publication of the final EIS, the Council requested that NMFS exempt fixed gear vessels (including pot, jig, and hook-and-line gear) from the VMS requirement. The Council also requested that NMFS develop a separate comprehensive analysis of alternatives for applying VMS for all fishing vessels in the BSAI and GOA to address enforcement, management, and safety objectives. Because the VMS requirements recommended by the Council would promote very effective enforcement for the gears with the greatest potential to impact sensitive habitat features, NMFS followed the Council's recommendation and retained the VMS requirement only for vessels with mobile gear, including dinglebar gear.

Comment 16: The Bering Sea provides ecosystem and habitat function critical to ecologically sustainable fisheries. The EFH EIS contained enough information to support EFH conservation measures for the Bering Sea. Until NMFS implements regulations to minimize to the extent practical the adverse effect of fishing on EFH in the Bering Sea, NMFS is in violation of the EFH provisions of the Magnuson-Stevens Act. The Council needs to make progress on developing a reasonable range of alternatives, including a conservation management alternative.

Response: The EFH EIS concluded that the effects of fishing on EFH in Alaska (including the Bering Sea) are minimal; and therefore, NMFS is not required by the Magnuson-Stevens Act to adopt new conservation measures to reduce the effects of fishing on EFH. NMFS concluded that the BSAI Groundfish FMP complies with the Magnuson-Stevens Act requirement to minimize to the extent practicable the adverse effects of fishing on EFH. Available information indicates that the eastern Bering Sea does not support the kind of hard bottom habitats that sustain extensive corals and other particularly sensitive benthic invertebrates. However, the Council is reevaluating fishing impacts on the Bering Sea bottom habitat and may consider new habitat conservation measures for this area. NMFS agrees that any National Environmental Policy Act analysis for Bering Sea habitat conservation must include a reasonable range of alternatives.

Comment 17: Scallop vessels fishing in waters outside of Cook Inlet are restricted to no more than two dredges, 15 feet (4.5 m) or less in width. Scallops occur in specific, well-documented locations that are not identified as EFH protection areas. Scallop fishing is limited to these sites. In addition, many areas along the Alaska coast are closed to scallop dredging for various reasons. All scallop vessels are required to carry observers. For these reasons, scallop vessels should be exempt from the EFH protection measures for the GOA.

Response: Scallop dredges are heavy steel framed devices that are dragged along the seabed. They are designed to create a downward force on the dredge and cutting bar. The effects of the gear on bottom habitats depend on gear configuration and the environments in which they are fished. Despite the limited extent of the scallop fishery in Alaska, the Council determined that the measures designed to protect EFH should apply to all bottom tending mobile fishing gear (and in some cases, to all fishing gear that contacts the bottom). As noted in the EFH EIS, the new fishery closures in the GOA are not expected to have substantial effects on the scallop fishery.

Comment 18: In the Aleutian Islands subarea, the protection areas were based on fishing locations provided by vessel owners and operators in the Aleutian Islands groundfish fisheries. The coordinates in the proposed rule for the Semichi block do not accurately reflect fishing patterns. The coordinates should be adjusted a couple miles south and west to accommodate the difference between haulback and tow locations. In addition, the open areas near Buldir Island should be adjusted to reflect historical fishing areas and areas where no fishing has occurred.

Response: The coordinates for the open areas of the AIHCA have been approved and finalized in the amendments to the BSAI groundfish, salmon, crab, and scallop FMPs on May 3, 2006. FMP amendments would be necessary to change the coordinates of any of the open areas in the AIHCA. NMFS encourages the public to work with the Council to identify any needed adjustments to the open areas in the AIHCA. Until the FMPs are amended, NMFS is unable to change the regulatory description of the AIHCA.

Comment 19: We support the concept of establishing open areas in the Aleutian Islands subarea where bottom trawl gear may be used. Because fish patterns in the Aleutian Islands subarea follow patterns of water flows through the passes, trawling occurs in the same areas since the 1940s and 1950s. Establishing open areas is a practicable means of protecting fragile coral habitats in the Aleutian Islands subarea because of this historical concentration of fishing effort in discrete locations. This method is less likely to work for the areas of broad fishing effort like the Bering Sea.

Response: NMFS agrees that establishing open areas in the AIHCA is the best approach for protection of fragile habitat from the effects of fishing. The Council is evaluating potential fishing impacts and protection measures for the Bering Sea bottom habitat. NMFS will work with the Council and industry to ensure any proposed measures are practical and effective.

Changes From and Clarification of the Proposed Rule

Six minor revisions were made to the final rule from the proposed rule to ensure the format of the regulations remained consistent. In § 679.2, the term ''federally permitted'' was changed to ''federally permitted vessel'' and the definition was clarified to be consistent with how the term is used in regulatory text implementing this rule. The term ''Alaska Seamount Habitat Conservation Areas'' also was corrected to ''Alaska Seamount Habitat Protection Areas'' to ensure consistent identification of the areas in the regulations. In § 679.7, paragraph headings were added to paragraphs (a)(20) through (a)(22) in the same manner as other paragraphs in this section. In addition, the term ''fishing'' was removed from paragraph (a)(20) to be consistent with the term ''federally permitted vessel'' as defined by this rule. The title to each table in the final

rule was revised to include the text ''to Part 679,'' in the manner as other table titles in part 679. In Table 26, the name ''Fariweather'' is corrected to ''Fairweather'' for area numbers 2 and 3.

In the preamble to the proposed rule, page 14476, column 3, first sentence under the AICHPAs section, the parenthetical clause contains a typographical error. The text ''onpelagic'' should have been ''nonpelagic.'' This parenthetical statement was intended to remind the reader of those gear types included in the bottom contact fishing gear definition. This error appeared only once in the entire document, and the definition of bottom contact fishing gear includes only nonpelagic trawl. Because the regulatory text correctly states the gears included in the bottom contact fishing gear definition, the closures for the AICHPAs are specific to bottom contact fishing gear, and the text ''onpelagic'' appears only once in the document, no additional clarification will be published for this typographical error.

Classification

The Acting Administrator, Alaska Region, NMFS, determined that the FMP amendments implemented by this final rule are necessary for the conservation and management of the groundfish, salmon, scallop, and crab fisheries and that they are consistent with the Magnuson-Stevens Act and other applicable laws.

This final rule has been determined to be not significant for the purposes of Executive Order 12866.

NMFS prepared a final EIS for the EFH portion of this action (*see* **ADDRESSES**). A notice of availability was published on May 6, 2005 (70 FR 24037), and the Record of Decision was completed on August 8, 2005. The analysis indicates that fishing has long-term effects on benthic habitat features off Alaska and acknowledges that considerable scientific uncertainty remains regarding the consequences of such habitat changes for the sustained productivity of managed species. Nevertheless, based on the best available scientific information, the EIS concludes that the effects on EFH are minimal because the analysis finds no indication that continued fishing activities at the current rate and intensity would alter the capacity of EFH to support healthy populations of managed species over the long term. Despite this conclusion, the Council elected to take precautionary measures to provide additional habitat protection.

NMFS also prepared an EA for the HAPC portion of this action. The EA evaluated various alternatives (see below) for HAPC in the GOA and BSAI. A finding of no significant impact was issued for this EA.

NMFS prepared a final regulatory flexibility analysis (FRFA) for this action. The FRFA incorporates the IRFAs, a summary of the significant issues raised by any public comment on the IRFAs with NMFS responses to those comments, and a summary of the analyses completed to support the action. The need for and objectives of this action are contained in the preamble to the proposed rule published in the **Federal Register** on March 22, 2006 (71 FR 14470), and are not repeated here. The legal basis for this action is contained in this preamble. A summary of the FRFA and how it addresses each of the requirements in 5 U.S.C. 604(a)(1)–(5) follows. A copy of this analysis is available from NMFS (*see* **ADDRESSES**).

Summary of Significant Issues Raised in Public Comment

NMFS received 11 comment letters containing 7 comments related to economic impacts of the proposed action. No changes were made to the final rule from the proposed rule based on the comments. No comments directly addressed the IRFAs, however, several comments, (comments 11 through 15) addressed economic impacts from the VMS requirement for various types of small vessels. Comment 10 questioned the need for fixed gear closures in the eastern GOA, and Comment 17 questioned the need for scallop vessels to be required to comply with EFH and HAPC requirements. Comments 10 through 15, and 17 and NMFS' responses are in the preamble under Comments and Responses and are not repeated here.

Description and Estimate of the Number of Small Entities to Which the Rule Will Apply

The EFH protection measures for the Aleutian Islands subarea and the GOA would have an adverse impact on small entities using bottom trawl, and other bottom contact gear, by restricting the areas within which they may operate. An estimated 13 directly regulated small entities might be affected in the Aleutian Islands subarea. About 2.2 percent of the revenues from all affected entities (large and small) in the Aleutian Islands subarea could be placed at risk. Fifty-eight small entities in the GOA might be affected. Affected entities (large and small) in the GOA could see 4.2 percent of their revenues placed at risk. Entities in the Aleutian Islands subarea and the GOA do have opportunities to make up some of these revenues by substituting fishing in other areas.

Prohibiting the use of all bottom contact gear in the AICHPA could directly regulate as many as 124 small entities. Revenues potentially at risk were less than 0.5 percent of Aleutian Islands subarea groundfish revenue, about 4.4 percent of Aleutian Islands subarea halibut revenue, and less than 0.1 percent of crab revenue. Much of the revenue placed at risk could potentially be recovered by changes in fishing location.

Designation of the BRHCZ as HAPC, and prohibition of mobile bottom contact gear, could potentially affect 23 small head-and-gut catcher/processors. About 0.02 percent of their groundfish gross revenues might be placed at risk. A no action alternative was considered for protection of Bowers Ridge. However, the action alternative provided more potential protection at no significant additional cost to fishing operations.

This rule would prohibit CDQ vessels from directly fishing for pollock in such a way that the vessel would have more than 20 crabs of any species, with a carapace width greater than 1.5 inches, on board at any time (§ 697.7(a)(14)(i)). CDQ vessels directly fishing for pollock also would be prohibited from using nonpelagic trawl gear by regulations in § 697.24. This action could potentially affect the six CDQ groups and the pollock vessels that fish for them. Because CDQ vessels currently use pelagic trawl gear for directed fishing for pollock, this action is not likely to affect the revenue from this activity. While a no action alternative was considered, the action alternative provided more potential protection and no significant additional cost to fishing operations.

A requirement that federally permitted vessels operating in the Aleutian Islands subarea carry and operate VMS could potentially directly regulate 124 vessels with average gross revenues of $950,000. Average installation costs are $1,550 for vessels that do not already have VMS. Annual transmission costs are $451 for vessels acquiring VMS, and $994 for vessels that already have it. Average repair costs were estimated to be $28. An alternative to exempt vessels under 32 feet LOA was considered. This would have exempted only three vessels. NMFS determined that the potential for small vessels to employ bottom contact gear in protected EFH and HAPC waters in the Aleutian Islands subarea makes it necessary for all vessels to carry VMS to efficiently enforce closure areas.

The Council recommended designating the ASHPAs as HAPC and prohibiting federally managed bottom contact gear in these areas. This action could directly regulate as many as seven small entities. The impact is believed to be very small; about 0.01 percent of their total groundfish revenues might be placed at risk. A no action alternative, and an alternative only designating five seamounts were both considered. The latter alternative was not taken, since the 15 seamount alternative provided greater protection, and appeared to impose a very small additional burden on small entities.

The Council recommended five GOACHPAs off of Southeast Alaska, and prohibited federally permitted vessels from fishing in them with bottom contact gear. Almost 300 small entities may have operated in proximity to these areas from 1995–2003. Revenues at risk appear to be about 0.03 percent of total groundfish revenue for the affected vessels.

The Council recommended federally permitted vessels operating with mobile bottom contact gear on board in the GOA to carry transmitting VMS units. This action was expected to directly regulate 73 small entities. Average gross revenues for these vessels were $453,000. Although installation costs are estimated to be $1,550, many of these vessels already have VMS. Therefore, average installation costs were estimated to be about $400. Average transmission costs were $500, and average annual repair costs were $16.

Alternatives Considered

The Council considered a suite of alternatives for the eastern Bering Sea subarea (EBS) in the draft EFH EIS/RIR/IRFA. Based on that preliminary analysis, the Council decided not to adopt new management measures for EFH protection in the EBS at this time, but to initiate an expanded analysis to further evaluate the potential impacts of fishing activities on EFH and any potential mitigation measures for the EBS. The Council determined that existing information was insufficient to justify immediate action to add new habitat protection measures in the EBS.

The following describes the alternatives considered for the EFH protection measures for the Aleutian Islands subarea and GOA.

Alternative 1 was the No Action (status quo) alternative. No additional measures would have been taken to minimize the effects of fishing on EFH. This alternative was not chosen, since it would fail to accomplish the Council's objectives.

Alternative 2 would have amended the GOA Groundfish FMP to prohibit the use of bottom trawls for targeting slope rockfish in 11 designated areas of the GOA upper slope (200 to 1,000 m), but allow vessels endorsed for trawl gear to fish for rockfish in these areas with fixed gear or pelagic trawl gear. This alternative involves more extensive GOA closures for this fishery than the preferred alternative, Alternative 5C. Therefore, on this issue, a less burdensome alternative was chosen.

Alternative 3 would have amended the GOA Groundfish FMP to prohibit the use of bottom trawl gear for targeting GOA slope rockfish species anywhere on the upper slope area (200 to 1,000 m), but allow vessels endorsed for trawl gear to fish for slope rockfish with fixed gear or pelagic trawl gear. This alternative involves more extensive closures for this fishery than the preferred alternative, Alternative 5C. Therefore, on this issue, a less burdensome alternative was chosen.

Alternative 4 would have amended the GOA and the BSAI Groundfish FMPs to prohibit the use of bottom trawl gear in designated areas of the EBS, AI, and GOA. In the EBS only, bottom trawl gear used in the remaining open areas would be required to have disks/bobbins on trawl sweeps and footropes to reduce the impact on the bottom. The EBS was to be subject to 10-year rotational closures. Alternative 4 would prohibit nonpelagic trawl (NPT) gear use in designated areas of the Aleutian Islands subarea (near Semisopochnoi Island, Stalemate Bank, Bowers Ridge, and Seguam Foraging Area). In the GOA, Alternative 4 would have prohibited fishing for rockfish with bottom trawls in designated sites on the upper to intermediate slope. An important reason for not choosing Alternative 4 was that it would impose restrictions in the EBS. The Council chose not to implement EFH fishing restrictions in the EBS. The Council determined that current EFH knowledge and management experience in the EBS were insufficient to justify immediate action.

Alternative 5A would have amended the GOA and BSAI Groundfish FMPs to prohibit the use of bottom trawl gear in expanded designated areas of the EBS, AI, and GOA. In the EBS only, bottom trawl gear used in the remaining open areas would be required to have disks/bobbins on trawl sweeps and footropes. The EBS was to be subject to 5-year rotational closures. In the GOA, Alternative 4 would have prohibited fishing for all groundfish with bottom trawls in designated sites on the upper to intermediate slope, and prohibited targeting GOA slope rockfish with bottom trawls on the upper to intermediate slope. Alternative 5A would have prohibited NPT gear use in five designated areas of the Aleutian Islands subarea (Semisopochnoi Island, Seguam Foraging Area, Yunaska Island, Stalemate Bank, and Bowers Ridge). An important reason for not choosing Alternative 5A was that it would impose restrictions in the EBS. The Council chose not to implement EFH fishing restrictions in the EBS. The Council determined that current EFH knowledge and management experience in the EBS were insufficient to justify immediate action.

Alternative 5B would have amended the GOA and BSAI Groundfish FMPs to prohibit the use of bottom trawl gear in designated areas of the BSAI and GOA. In the EBS, bottom trawling would be closed in areas subject to a 5-year rotating closures. Bottom trawls would be required to have sweeps and footropes equipped with disks/bobbins to reduce seafloor contact. In the Aleutian Islands subarea, various combinations of areas would have been closed to bottom trawling gear under each of three different Alternative 5B options (Options 1, 2, and 3). In addition, Options 1 and 2 would have required reductions in total allowable catch amounts (TACs) for Pacific cod, Atka mackerel, and rockfish equivalent to the expected catch of each species that would have come from the closed areas. Options 1 and 2 also would have closed specific fisheries and areas once coral/bryozoan and sponge bycatch limits were reached. In the GOA, Alternative 5B would have prohibited fishing for all groundfish with bottom trawls in designated sites on the upper to intermediate slope, and prohibited targeting GOA slope rockfish with bottom trawls on the upper to intermediate slope at depths between 200 m and 1,000 m. An important reason for not choosing Alternative 5B was that it would have imposed restrictions in the EBS. The Council chose not to implement EFH fishing restrictions in the EBS. The Council determined that current EFH knowledge and management experience in the EBS were insufficient to justify immediate action.

The preferred alternative, Alternative 5C, will amend the FMPs to prohibit the use of bottom trawl gear in designated areas of the Aleutian Islands subarea and GOA to reduce the effects of fishing on corals, sponges, and rocky (''hard bottom'') habitats. In the Aleutian Islands subarea, a combination of measures will reduce the effects of all bottom contact gear on corals and

sponges. The management measures established by this alternative will be in addition to existing habitat protection measures (e.g., area closures, gear restrictions, and limitations on fishing effort). Additionally, all bottom contact fishing will be prohibited in six coral garden sites, located off Semisopochnoi Island, Bobrof Island, Cape Moffet, Great Siskin Island, Ulak Island, and Adak Canyon, in the Aleutian Islands subarea, the AICHPA. To ensure adequate enforcement, VMS will be required on all commercial fishing vessels in the Aleutian Islands subarea, as well as on all commercial fishing vessels operating in the GOA with bottom contact gear on board. Alternative 5C will not include new management measures for the EBS because available information indicates that the EBS does not support the kind of hard bottom habitats that sustain extensive corals and other particularly sensitive benthic invertebrates. However, under this alternative, the Council will initiate a subsequent analysis, specifically designed to consider potential future habitat conservation measures for the EBS (including the management options identified in the EFH EIS and others). The VMS requirement for the Aleutian Islands subarea was adopted under Alternative 5C, but additional alternatives for the GOA VMS requirement were considered and are described below.

Alternative 6 would have amended the GOA and BSAI Groundfish FMPs, the Pacific Salmon FMP, the Alaska Scallop FMP, the BSAI Crab FMP, and Pacific Halibut Act regulations to prohibit the use of all bottom tending gear (dredges, bottom trawls, pelagic trawls that contact the bottom, longlines, dinglebars, and pots) within approximately 20 percent of the fishable waters (i.e., 20 percent of the waters shallower than 1,000 m) in the BSAI and GOA. This alternative would have implemented EFH restrictions in the EBS. The Council chose not to implement EFH fishing restrictions in the EBS. The Council determined that current EFH knowledge and management experience in the EBS were insufficient to justify immediate action. This alternative would have imposed relatively heavy burdens on entities operating in the BSAI and the GOA.

Alternatives considered for the AICHPAs are as follows:

Alternative 1 was the no action alternative. This alternative would not have met the Council's HAPC protection objectives. Therefore, Alternative 1 was not chosen.

Both Alternatives 2 and 3 were chosen as part of the preferred alternative. Alternative 2 is the AICHPA and would adopt six coral garden sites within the Aleutian Islands subarea as HAPC and implement fishing restrictions in these areas. This alternative was adopted as part of Alternative 5C explained above. Alternative 3 would adopt an area including Bowers Ridge and Ulm Plateau as HAPC and establish the BRHCZ where fishing with mobile bottom contact gear is prohibited.

Alternative 4 would have designated four sites within the Aleutian Islands subarea as HAPC (South Amlia/Atka, Kanaga Volcano, Kanaga Island, and Tanaga Islands), with two options for gear restrictions. Alternative 4 was not adopted because of the limited information on the extent to which significant corals would be protected for the proposed closures that was available to the Council.

Alternative 5 would have adopted all the areas designated under Alternatives 2, 3, and 4. Alternative 5 included Alternatives 2 and 3, which were chosen, but also Alternative 4, which was not chosen. Therefore, Alternative 5 was not chosen.

Alternatives considered for the GOACHPA are as follows:

Alternative 1 was the no action alternative. This alternative did not advance the Council's objectives. Therefore, Alternative 1 was not chosen.

Alternative 2 would have designated three sites along the continental slope at Sanak, Albatross, and Middleton Islands as HAPC and close sites to either mobile bottom-contact gear or bottom trawling for five years. Alternative 2 was more burdensome than the preferred Alternative 3. Alternative 2 revenues at risk for trawler catcher vessels had risen to 2 to 3 percent of their gross revenues in some historical years.

The preferred alternative, Alternative 3, designates four areas near Cape Omaney, Fairweather Grounds NW., and Fairweather Grounds SW., as HAPC. It would establish the GOACHPAs and prohibit bottom-contact gear within these five smaller areas inside these HAPC. As noted above, this alternative had very small impacts on the fleet.

Alternative 4 would adopt all HAPC specified in Alternatives 2 and 3 with the same boundaries and management measures. Alternative 4 was ruled out when the Council chose not to adopt Alternative 2.

Alternatives considered for VMS requirements for the GOA included longline vessels as well as mobile bottom contact gear vessels. The Council considered alternatives that would have exempted vessels under 25 feet LOA, under 30 feet LOA, under 32 feet LOA, using dredge gear, and using dinglebar gear. The Council chose to exclude longline vessels to reduce the burden on small entities. Because mobile bottom contact gear was believed to create a greater potential for damage to EFH and HAPC, these vessels required more careful monitoring and enforcement. Therefore, the alternative chosen by the Council requires VMS for these vessels.

Steps Taken To Minimize Economic Impacts on Small Entities

The Council recommended not requiring VMS for longline vessels operating in the GOA, thereby eliminating any potential VMS costs to these vessels from this action. The selection of sites for closures was developed through industry participation and based on the best information available to ensure closures did not impose any more economic burden than was necessary to meet the Council's objectives to protect EFH and HAPC. A number of alternatives were rejected based on lack of information to support the need for protection measures or due to economic impact beyond what was needed to meet the Council's objectives.

Description of Reporting, Recordkeeping and Other Compliance Requirements

The IRFAs did not reveal any Federal rules that duplicate, overlap, or conflict with this action. The VMS portion of this action would add new reporting requirements for vessels that carry an FFP or FCVP and fish in any fishery in the Aleutian Islands subarea, or those that carry an FFP or FCVP and have mobile bottom contact fishing gear onboard while operating in the GOA. These fishing operations would be required to carry VMS units and to report their locations every half hour while they are participating in fisheries subject to the requirement. Moreover, they would be required to notify NOAA Office of Law Enforcement (OLE) that their VMS units are active, once installed, and before vessel operation. They also would be required to notify NOAA OLE in the event of a breakdown in the unit.

Small Entity Compliance Guide

Section 212 of the Small Business Regulatory Enforcement Fairness Act of 1996 states that, for each rule, or group of related rules for which an agency is required to prepare a FRFA, the agency shall publish one or more guides to assist small entities in complying with

the rule and shall designate such publications as ''small entity compliance guides.'' The agency shall explain the actions a small entity is required to take to comply with a rule or group of rules. As part of this rulemaking process, NMFS Alaska Region has developed a Web site that provides easy access to details of this final rule, including links to the final rule, maps of closure areas, and frequently asked questions regarding EFH. The relevant information available on the Web site is the Small Entity Compliance Guide. The Web site address is *http://www.fakr.noaa.gov/habitat/efh.htm.* Copies of this final rule are available upon request from the NMFS, Alaska Regional Office (*see* **ADDRESSES**).

This final rule contains a collection-of-information requirement subject to the Paperwork Reduction Act (PRA) and that has been approved by the Office of Management and Budget (OMB) under control number OMB 0648–0445. Public reporting burden per response are estimated to average: 6 seconds for each VMS transmission, 12 minutes for VMS check-in form, 6 hours for VMS installation, and 4 hours for VMS annual maintenance. The response times include the time for reviewing instructions, searching existing data sources, gathering and maintaining the data needed, and completing and reviewing the collection-of-information. Send comments regarding these burden estimates or any other aspect of this data collection, including suggestions for reducing the burden, to NMFS (*see* **ADDRESSES**) and by e-mail to *David_Rostker@omb.eop.gov*, or fax to 202–395–7285.

Notwithstanding any other provision of the law, no person is required to respond to, and no person shall be subject to penalty for failure to comply with, a collection-of-information subject to the requirements of the PRA, unless that collection-of-information displays a currently valid OMB control number.

List of Subjects in 50 CFR Part 679

Alaska, Fisheries, Recordkeeping and reporting requirements.

Dated: June 22, 2006.

James W. Balsiger,

Acting Deputy Assistant Administrator for Regulatory Programs, National Marine Fisheries Service.

■ For reasons set out in the preamble, 50 CFR part 679 is amended as follows:

PART 679—FISHERIES OF THE EXCLUSIVE ECONOMIC ZONE OFF ALASKA

■ 1. The authority citation for part 679 continues to read as follows:

Authority: 16 U.S.C. 773 *et seq.*; 1540(f); 1801 *et seq.*; 1851 note; 3631 *et seq.*

■ 2. In § 679.2, add in alphabetical order the new definitions for ''Alaska Seamount Habitat Protection Areas'', ''Aleutian Islands Coral Habitat Protection Areas'', ''Aleutian Islands Habitat Conservation Area'', ''Bowers Ridge Habitat Conservation Zone'', ''Federally permitted vessel'', ''Gulf of Alaska Coral Habitat Protection Areas'', ''Gulf of Alaska Slope Habitat Conservation Areas'', and ''Operate a vessel''; and under the term ''Authorized fishing gear'', redesignate paragraphs (9) through (17) as paragraphs (12) through (20), redesignate paragraphs (2) through (8) as paragraphs (4) through (10), redesignate paragraph (1) as paragraph (2), and add paragraphs (1), (3), and (11) to read as follows:

§ 679.2 Definitions.

* * * * *

Alaska Seamount Habitat Protection Areas means management areas established for the protection of seamount habitat areas of particular concern in the BSAI and GOA. See Table 22 to this part.

* * * * *

Aleutian Islands Coral Habitat Protection Areas means management areas established for the protection of certain coral garden areas in the Aleutian Islands subarea. See Table 23 to this part.

Aleutian Islands Habitat Conservation Area means a management area established for the protection of fish habitat in the Aleutian Islands subarea. See Table 24 to this part.

* * * * *

Authorized fishing gear * * *.

(1) *Bottom contact gear* means nonpelagic trawl, dredge, dinglebar, pot, or hook-and-line gear.

* * * * *

(3) *Dredge* means a dredge-like device designed specifically for and capable of taking scallops by being towed along the ocean floor.

* * * * *

(11) *Mobile bottom contact gear* means nonpelagic trawl, dredge, or dinglebar gear.

* * * * *

Bowers Ridge Habitat Conservation Zone means a management area established for the protection of the Bowers Ridge and Ulm Plateau habitat areas of particular concern in the BSAI. See Table 25 to this part.

* * * * *

Federally permitted vessel means a vessel that is named on either a Federal fisheries permit issued pursuant to § 679.4(b) or on a Federal crab vessel permit issued pursuant to § 680.4(k) of this chapter. Federally permitted vessels must conform to regulatory requirements for purposes of fishing restrictions in habitat conservation areas, habitat conservation zones, and habitat protection areas; for purposes of anchoring prohibitions in habitat protection areas; and for purposes of VMS requirements.

* * * * *

Gulf of Alaska Coral Habitat Protection Areas means management areas established for the protection of coral habitat areas of particular concern in the Gulf of Alaska. See Table 26 to this part.

Gulf of Alaska Slope Habitat Conservation Areas means management areas established for the protection of essential fish habitat on the Gulf of Alaska slope. See Table 27 to this part.

* * * * *

Operate a vessel means for purposes of VMS that the fishing vessel is:

(1) Offloading or processing fish;

(2) In transit to, from, or between the fishing areas; or

(3) Fishing or conducting operations in support of fishing.

* * * * *

■ 3. In § 679.4, paragraph (k)(3)(iv)(A) is revised to read as follows:

§ 679.4 Permits.

* * * * *

(k) * * *

(3) * * *

(iv) * * *

(A) *General.* A vessel may only use gear consistent with the gear designation on the LLP license authorizing the use of that vessel to fish for license limitation groundfish or crab species, except that a vessel fishing under authority of an LLP license endorsed only for trawl gear may fish for slope rockfish with non-trawl gear within the Gulf of Alaska Slope Habitat Conservation Areas, as described in Table 27 to this part.

* * * * *

■ 4. In § 679.7, paragraph (a)(14)(i) is revised, and paragraphs (a)(20) through (a)(22) are added to read as follows:

§ 679.7 Prohibitions.

* * * * *

(a) * * *

(14) * * *

(i) *BSAI.* Use a vessel to participate in a directed fishery for pollock using

trawl gear and have on board the vessel, at any particular time, 20 or more crabs of any species that have a carapace width of more than 1.5 inches (38 mm) at the widest dimension.

* * * * *

(20) *Anchoring in a habitat protection area.* Anchor any federally permitted vessel in any habitat protection area described in Tables 22, 23, and 26 of this part.

(21) *VMS on vessels in the Aleutian Islands subarea.* Operate a federally permitted vessel in the Aleutian Islands subarea without an operable VMS and without complying with the requirements at § 679.28.

(22) *VMS for mobile bottom contact gear vessels in the GOA.* Operate a federally permitted vessel in the GOA with mobile bottom contact gear on board without an operable VMS and without complying with the requirements at § 679.28.

* * * * *

■ 5. In § 679.22, paragraph (a)(12) is revised and paragraphs (a)(13) through (a)(15) and (b)(8) through (b)(10) are added to read as follows:

§ 679.22 Closures.

(a) * * *

(12) *Alaska Seamount Habitat Protection Areas.* No federally permitted vessel may fish with bottom contact gear in the Alaska Seamount Habitat Protection Areas, as described in Table 22 to this part.

(13) *Aleutian Islands Coral Habitat Protection Areas.* No federally permitted vessel may fish with bottom contact gear in the Aleutian Islands Coral Habitat Protection Areas, as described in Table 23 to this part.

(14) *Aleutian Islands Habitat Conservation Area.* Except within those areas identified as opened to nonpelagic trawl gear fishing in Table 24 to this part, no federally permitted vessel may fish with nonpelagic trawl gear in the Aleutian Islands Habitat Conservation Area, as described in Table 24 to this part.

(15) *Bowers Ridge Habitat Conservation Zone.* No federally permitted vessel may fish with mobile bottom contact gear in the Bowers Ridge Habitat Conservation Zone, as described in Table 25 to this part.

(b) * * *

(8) *Alaska Seamount Habitat Protection Areas.* No federally permitted vessel may fish with bottom contact gear in the Alaska Seamount Habitat Protection Areas, as described in Table 22 to this part.

(9) *Gulf of Alaska Coral Habitat Protection Areas.* No federally permitted vessel may fish with bottom contact gear in the Gulf of Alaska Coral Habitat Protection Areas, as described in Table 26 to this part.

(10) *Gulf of Alaska Slope Habitat Conservation Areas.* No federally permitted vessel may fish with nonpelagic trawl gear in the Gulf of Alaska Slope Habitat Conservation Areas, as described in Table 27 to this part.

* * * * *

■ 6. In § 679.24, paragraph (b)(4) is revised to read as follows:

§ 679.24 Gear limitations.

* * * * *

(b) * * *

(4) *BSAI pollock nonpelagic trawl prohibition.* No person may use nonpelagic trawl gear to engage in directed fishing for pollock in the BSAI.

* * * * *

■ 7. In § 679.28, paragraphs (f)(3)(iv) and (f)(6) are revised to read as follows:

§ 679.28 Equipment and operational requirements.

* * * * *

(f) * * *

(3) * * *

(iv) Stop fishing immediately if:

(A) Informed by NMFS staff or an authorized officer that NMFS is not receiving position reports from the VMS transmitter, or

(B) The vessel operator determines that the VMS is not transmitting properly.

* * * * *

(6) *When must the VMS transmitter be transmitting?* Your vessel's transmitter must be transmitting if:

(i) You operate a vessel in any reporting area (see definitions at § 679.2) off Alaska while in any fishery requiring VMS, for which the vessel has a species and gear endorsement on its Federal fisheries permit under § 679.4(b)(5)(vi), is open;

(ii) You operate a federally permitted vessel in the Aleutian Islands subarea; or

(iii) You operate a federally permitted vessel in the GOA and have mobile bottom contact gear on board.

* * * * *

■ 8. In 50 CFR part 679, tables 22 through 27 are added to read as follows:

TABLE 22 TO PART 679.—ALASKA SEAMOUNT HABITAT PROTECTION AREAS

Area No.	Name	Latitude	Longitude
1	Dickins Seamount	54 39.00 N 54 39.00 N 54 27.00 N 54 27.00 N	136 48.00 W 137 9.00 W 137 9.00 W 136 48.00 W
2	Denson Seamount	54 13.20 N 54 13.20 N 53 57.00 N 53 57.00 N	137 6.00 W 137 36.00 W 137 36.00 W 137 6.00 W
3	Brown Seamount	55 0.00 N 55 0.00 N 54 48.00 N 54 48.00 N	138 24.00 W 138 48.00 W 138 48.00 W 138 24.00 W
4	Welker Seamount	55 13.80 N 55 13.80 N 55 1.80 N 55 1.80 N	140 9.60 W 140 33.00 W 140 33.00 W 140 9.60 W
5	Dall Seamount	58 18.00 N 58 18.00 N 57 45.00 N	144 54.00 W 145 48.00 W 145 48.00 W

TABLE 22 TO PART 679.—ALASKA SEAMOUNT HABITAT PROTECTION AREAS—Continued

Area No.	Name	Latitude	Longitude
		57 45.00 N	144 54.00 W
6	Quinn Seamount	56 27.00 N 56 27.00 N 56 12.00 N 56 12.00 N	145 0.00 W 145 24.00 W 145 24.00 W 145 0.00 W
7	Giacomini Seamount	56 37.20 N 56 37.20 N 56 25.20 N 56 25.20 N	146 7.20 W 146 31.80 W 146 31.80 W 146 7.20 W
8	Kodiak Seamount	57 0.00 N 57 0.00 N 56 48.00 N 56 48.00 N	149 6.00 W 149 30.00 W 149 30.00 W 149 6.00 W
9	Odessey Seamount	54 42.00 N 54 42.00 N 54 30.00 N 54 30.00 N	149 30.00 W 150 0.00 W 150 0.00 W 149 30.00 W
10	Patton Seamount	54 43.20 N 54 43.20 N 54 34.20 N 54 34.20 N	150 18.00 W 150 36.00 W 150 36.00 W 150 18.00 W
11	Chirikof & Marchand Seamounts	55 6.00 N 55 6.00 N 54 42.00 N 54 42.00 N	151 0.00 W 153 42.00 W 153 42.00 W 151 0.00 W
12	Sirius Seamount	52 6.00 N 52 6.00 N 51 57.00 N 51 57.00 N	160 36.00 W 161 6.00 W 161 6.00 W 160 36.00 W
13	Derickson Seamount	53 0.00 N 53 0.00 N 52 48.00 N 52 48.00 N	161 0.00 W 161 30.00 W 161 30.00 W 161 0.00 W
14	Unimak Seamount	53 48.00 N 53 48.00 N 53 39.00 N 53 39.00 N	162 18.00 W 162 42.00 W 162 42.00 W 162 18.00 W
15	Bowers Seamount	54 9.00 N 54 9.00 N 54 4.20 N 54 4.20 N	174 52.20 E 174 42.00 E 174 42.00 E 174 52.20 E

Note: Each area is delineated by connecting the coordinates in the order listed by straight lines. The last set of coordinates for each area is connected to the first set of coordinates for the area by a straight line. Projected coordinate system is North American Datum 1983, Albers.

TABLE 23 TO PART 679.—ALEUTIAN ISLANDS CORAL HABITAT PROTECTION AREAS

Area No.	Name	Latitude	Longitude
1	Great Sitkin I	52 9.56 N 52 9.56 N 52 4.69 N 52 6.59 N	176 6.14 W 176 12.44 W 176 12.44 W 176 6.12 W
2	Cape Moffett I	52 0.11 N 52 0.10 N 51 55.69 N 51 55.69 N 51 57.96 N	176 46.65 W 176 53.00 W 176 53.00 W 176 48.59 W 176 46.52 W
3	Adak Canyon	51 39.00 N 51 39.00 N 51 30.00 N	177 0.00 W 177 3.00 W 177 3.00 W

TABLE 23 TO PART 679.—ALEUTIAN ISLANDS CORAL HABITAT PROTECTION AREAS—Continued

Area No.	Name	Latitude	Longitude
		51 30.00 N	177 0.00 W
4	Bobrof I	51 57.35 N 51 57.36 N 51 51.65 N 51 51.71 N	177 19.94 W 177 29.11 W 177 29.11 W 177 19.93 W
5	Ulak I	51 25.85 N 51 25.69 N 51 22.28 N 51 22.28 N	178 59.00 W 179 6.00 W 179 6.00 W 178 58.95 W
6	Semisopochnoi I	51 53.10 N 51 53.10 N 51 48.84 N 51 48.89 N	179 53.11 E 179 46.55 E 179 46.55 E 179 53.11 E

Note: Each area is delineated by connecting the coordinates in the order listed by straight lines. The last set of coordinates for each area is connected to the first set of coordinates for the area by a straight line. Projected coordinate system is North American Datum 1983, Albers.

TABLE 24 TO PART 679.—EXCEPT AS NOTED, LOCATIONS IN THE ALEUTIAN ISLANDS HABITAT CONSERVATION AREA OPEN TO NONPELAGIC TRAWL FISHING

Area No.	Name	Latitude	Longitude	Footnote
1	Islands of 4 Mountains North	52 54.00 N 52 54.00 N 52 42.00 N 52 42.00 N	170 18.00 W. 170 24.00 W. 170 24.00 W. 170 18.00 W.	
2	Islands of 4 Mountains West	53 12.00 N 53 12.00 N 53 6.00 N 53 6.00 N 53 0.00 N 53 0.00 N 52 54.00 N 52 54.00 N 52 48.00 N 52 48.00 N 52 54.00 N 52 54.00 N 53 0.00 N 53 0.00 N	170 0.00 W. 170 12.00 W. 170 12.00 W. 170 30.00 W. 170 30.00 W. 170 48.00 W. 170 48.00 W. 170 54.00 W. 170 54.00 W. 170 30.00 W. 170 30.00 W. 170 24.00 W. 170 24.00 W. 170 0.00 W.	
3	Yunaska I. South	52 24.00 N 52 24.00 N 52 12.00 N 52 12.00 N	170 30.00 W. 170 54.00 W. 170 54.00 W. 170 30.00 W.	
4	Amukta I. North	52 54.00 N 52 54.00 N 52 48.00 N 52 48.00 N 52 42.00 N 52 42.00 N 52 48.00 N 52 48.00 N	171 6.00 W. 171 30.00 W. 171 30.00 W. 171 36.00 W. 171 36.00 W. 171 12.00 W. 171 12.00 W. 171 6.00 W.	
5	Amukta Pass North	52 42.00 N 52 42.00 N 52 36.00 N 52 36.00 N	171 42.00 W. 172 6.00 W. 172 6.00 W. 171 42.00 W.	
6	Amlia North/Seguam	52 42.00 N 52 42.00 N 52 30.00 N 52 30.00 N 52 36.00 N 52 36.00 N 52 39.00 N 52 39.00 N	172 12.00 W. 172 30.00 W. 172 30.00 W. 172 36.00 W. 172 36.00 W. 172 42.00 W. 172 42.00 W. 173 24.00 W.	

TABLE 24 TO PART 679.—EXCEPT AS NOTED, LOCATIONS IN THE ALEUTIAN ISLANDS HABITAT CONSERVATION AREA OPEN TO NONPELAGIC TRAWL FISHING—Continued

Area No.	Name	Latitude	Longitude	Footnote
		52 36.00 N	173 30.00 W.	
		52 36.00 N	173 36.00 W.	
		52 30.00 N	173 36.00 W.	
		52 30.00 N	174 0.00 W.	
		52 27.00 N	174 0.00 W.	
		52 27.00 N	174 6.00 W.	
		52 23.93 N	174 6.00 W	1
		52 13.71 N	174 6.00 W.	
		52 12.00 N	174 6.00 W.	
		52 12.00 N	174 0.00 W.	
		52 9.00 N	174 0.00 W.	
		52 9.00 N	173 0.00 W.	
		52 6.00 N	173 0.00 W.	
		52 6.00 N	172 45.00 W.	
		51 54.00 N	172 45.00 W.	
		51 54.00 N	171 48.00 W.	
		51 48.00 N	171 48.00 W.	
		51 48.00 N	171 42.00 W.	
		51 54.00 N	171 42.00 W.	
		52 12.00 N	171 42.00 W.	
		52 12.00 N	171 48.00 W.	
		52 18.00 N	171 48.00 W.	
		52 18.00 N	171 42.00 W.	
		52 30.00 N	171 42.00 W.	
		52 30.00 N	171 54.00 W.	
		52 24.00 N	171 54.00 W.	
		52 24.00 N	172 0.00 W.	
		52 12.00 N	172 0.00 W.	
		52 12.00 N	172 42.00 W.	
		52 18.00 N	172 42.00 W.	
		52 18.00 N	172 37.13 W	2
		52 18.64 N	172 36.00 W.	
		52 24.00 N	172 36.00 W.	
		52 24.00 N	172 12.00 W	6
	Amlia North/Seguam donut	52 33.00 N	172 42.00 W	5
		52 33.00 N	173 6.00 W	5
		52 30.00 N	173 6.00 W	5
		52 30.00 N	173 18.00W	5
		52 24.00 N	173 18.00 W	5
		52 24.00 N	172 48.00 W	5
		52 30.00 N	172 48.00 W	5
		52 0.00 N	172 42.00 W	5, 7
7	Atka/Amlia South	52 0.00 N	173 18.00 W.	
		52 0.00 N	173 54.00 W.	
		52 3.08 N	173 54.00 W	2
		52 6.00 N	173 58.00 W.	
		52 6.00 N	174 6.00 W.	
		52 0.00 N	174 18.00 W.	
		52 0.00 N	174 12.00 W.	
		51 54.00 N	174 12.00 W.	
		51 54.00 N	174 18.00 W.	
		52 6.00 N	174 18.00 W.	
		52 6.00 N	174 21.86 W	1
		52 4.39 N	174 30.00 W.	
		52 3.09 N	174 30.00 W	1
		52 2.58 N	174 30.00 W.	
		52 0.00 N	174 30.00 W.	
		52 0.00 N	174 36.00 W.	
		51 54.00 N	174 36.00 W.	
		51 54.00 N	174 54.00 W.	
		51 48.00 N	174 54.00 W.	
		51 48.00 N	173 24.00 W.	
		51 54.00 N	173 24.00 W.	
		51 54.00 N	173 18.00 W.	
8	Atka I. North	52 30.00 N	174 24.00 W.	
		52 30.00 N	174 30.00 W.	
		52 24.00 N	174 30.00 W.	
		52 24.00 N	174 48.00 W.	
		52 18.00 N	174 48.00 W.	

TABLE 24 TO PART 679.—EXCEPT AS NOTED, LOCATIONS IN THE ALEUTIAN ISLANDS HABITAT CONSERVATION AREA OPEN TO NONPELAGIC TRAWL FISHING—Continued

Area No.	Name	Latitude	Longitude	Footnote
		52 18.00 N	174 54.00 W.	
		52 12.00 N	174 54.00 W.	
		52 12.00 N	175 18.00 W.	
		52 1.14 N	175 18.00 W	1
		52 2.19 N	175 12.00 W.	
		52 6.00 N	175 12.00 W.	
		52 6.00 N	174 55.51 W	1
		52 6.00 N	174 54.04 W.	
		52 6.00 N	174 48.00 W.	
		52 12.00 N	174 48.00 W.	
		52 12.00 N	174 26.85 W	1
		52 12.94 N	174 18.00 W.	
		52 16.80 N	174 18.00 W	1
		52 17.06 N	174 18.00 W.	
		52 17.64 N	174 18.00 W	1
		52 18.00 N	174 19.12 W.	
		52 18.00 N	174 20.04 W	1
		52 19.37 N	174 24.00 W.	
9	Atka I. South	52 0.68 N	175 12.00 W	2
		52 0.76 N	175 18.00 W.	
		52 0.00 N	175 18.00 W.	
		52 0.00 N	175 12.00 W.	
10	Adak I. East	52 12.00 N	176 36.00 W.	
		52 12.00 N	176 36.00 W.	
		52 12.00 N	176 0.00 W.	
		52 2.59 N	176 0.00 W	1
		52 1.79 N	176 0.00 W.	
		52 0.00 N	176 0.00 W.	
		52 0.00 N	175 48.00 W.	
		51 57.74 N	175 48.00 W	1
		51 55.48 N	175 48.00 W.	
		51 54.00 N	175 48.00 W.	
		51 54.00 N	176 0.00 W	1
		51 53.09 N	176 6.00 W.	
		51 51.40 N	176 6.00 W	1
		51 49.67 N	176 6.00 W.	
		51 48.73 N	176 6.00 W	1
		51 48.00 N	176 6.36 W.	
		51 48.00 N	176 9.82 W	1
		51 48.00 N	176 9.99 W.	
		51 48.00 N	176 16.19 W	1
		51 48.00 N	176 24.71 W.	
		51 48.00 N	176 25.71 W	1
		51 45.58 N	176 30.00 W.	
		51 42.00 N	176 30.00 W.	
		51 42.00 N	176 33.92 W	1
		51 41.22 N	176 42.00 W.	
		51 30.00 N	176 42.00 W.	
		51 30.00 N	176 36.00 W.	
		51 36.00 N	176 36.00 W.	
		51 36.00 N	176 0.00 W.	
		51 42.00 N	176 0.00 W.	
		51 42.00 N	175 36.00 W.	
		51 48.00 N	175 36.00 W.	
		51 48.00 N	175 18.00 W.	
		51 51.00 N	175 18.00 W.	
		51 51.00 N	175 0.00 W.	
		51 57.00 N	175 0.00 W.	
		51 57.00 N	175 18.00 W.	
		52 0.00 N	175 18.00 W.	
		52 0.00 N	175 30.00 W.	
		52 3.00 N	175 30.00 W.	
		52 3.00 N	175 36.00 W.	
11	Cape Adagdak	52 6.00 N	176 12.44 W.	
		52 6.00 N	176 30.00 W.	
		52 3.00 N	176 30.00 W.	
		52 3.00 N	176 42.00 W.	
		52 0.00 N	176 42.00 W.	

TABLE 24 TO PART 679.—EXCEPT AS NOTED, LOCATIONS IN THE ALEUTIAN ISLANDS HABITAT CONSERVATION AREA OPEN TO NONPELAGIC TRAWL FISHING—Continued

Area No.	Name	Latitude	Longitude	Footnote
		52 0.00 N	176 46.64 W.	
		51 57.92 N	176 46.51 W	1
		51 54.00 N	176 37.07 W.	
		51 54.00 N	176 18.00 W.	
		52 0.00 N	176 18.00 W.	
		52 0.00 N	176 12.00 W.	
		52 2.85 N	176 12.00 W	1
		52 4.69 N	176 12.44 W.	
12	Cape Kiguga/Round Head	52 0.00 N	176 53.00 W.	
		52 0.00 N	177 6.00 W.	
		51 56.06 N	177 6.00 W	1
		51 54.00 N	177 2.84 W.	
		51 54.00 N	176 54.00 W.	
		51 48.79 N	176 54.00 W	1
		51 48.00 N	176 50.35 W.	
		51 48.00 N	176 43.14 W	1
		51 55.69 N	176 48.59 W.	
		51 55.69 N	176 53.00 W.	
13	Adak Strait South	51 42.00 N	176 55.77 W.	
		51 42.00 N	177 12.00 W.	
		51 30.00 N	177 12.00 W.	
		51 36.00 N	177 6.00 W.	
		51 36.00 N	177 3.00 W.	
		51 39.00 N	177 3.00 W.	
		51 39.00 N	177 0.00 W.	
		51 36.00 N	177 0.00 W.	
		51 36.00 N	176 57.72 W	3
14	Bay of Waterfalls	51 38.62 N	176 54.00 W.	
		51 36.00 N	176 54.00 W.	
		51 36.00 N	176 55.99 W	3
15	Tanaga/Kanaga North	51 54.00 N	177 12.00 W.	
		51 54.00 N	177 19.93 W.	
		51 51.71 N	177 19.93 W.	
		51 51.65 N	177 29.11 W.	
		51 54.00 N	177 29.11 W.	
		51 54.00 N	177 30.00 W.	
		51 57.00 N	177 30.00 W.	
		51 57.00 N	177 42.00 W.	
		51 54.00 N	177 42.00 W.	
		51 54.00 N	177 54.00 W.	
		51 50.92 N	177 54.00 W	1
		51 48.00 N	177 46.44 W.	
		51 48.00 N	177 42.00 W.	
		51 42.59 N	177 42.00 W	1
		51 45.57 N	177 24.01 W.	
		51 48.00 N	177 24.00 W.	
		51 48.00 N	177 14.08 W	4
16	Tanaga/Kanaga South	51 43.78 N	177 24.04 W	1
		51 42.37 N	177 42.00 W.	
		51 42.00 N	177 42.00 W.	
		51 42.00 N	177 50.04 W	1
		51 40.91 N	177 54.00 W.	
		51 36.00 N	177 54.00 W.	
		51 36.00 N	178 0.00 W.	
		51 38.62 N	178 0.00 W	1
		51 42.52 N	178 6.00 W.	
		51 49.34 N	178 6.00 W	1
		51 51.35 N	178 12.00 W.	
		51 48.00 N	178 12.00 W.	
		51 48.00 N	178 30.00 W.	
		51 42.00 N	178 30.00 W.	
		51 42.00 N	178 36.00 W.	
		51 36.26 N	178 36.00 W	1
		51 35.75 N	178 36.00 W.	
		51 27.00 N	178 36.00 W.	
		51 27.00 N	178 42.00 W.	

TABLE 24 TO PART 679.—EXCEPT AS NOTED, LOCATIONS IN THE ALEUTIAN ISLANDS HABITAT CONSERVATION AREA OPEN TO NONPELAGIC TRAWL FISHING—Continued

Area No.	Name	Latitude	Longitude	Footnote
		51 21.00 N	178 42.00 W.	
		51 21.00 N	178 24.00 W.	
		51 24.00 N	178 24.00 W.	
		51 24.00 N	178 12.00 W.	
		51 30.00 N	178 12.00 W.	
		51 30.00 N	177 24.00 W.	
17	Amchitka Pass East	51 42.00 N	178 48.00 W.	
		51 42.00 N	179 18.00 W.	
		51 45.00 N	179 18.00 W.	
		51 45.00 N	179 36.00 W.	
		51 42.00 N	179 36.00 W.	
		51 42.00 N	179 39.00 W.	
		51 30.00 N	179 39.00 W.	
		51 30.00 N	179 36.00 W.	
		51 18.00 N	179 36.00 W.	
		51 18.00 N	179 24.00 W.	
		51 30.00 N	179 24.00 W.	
		51 30.00 N	179 0.00 W.	
		51 25.82 N	179 0.00 W.	
		51 25.85 N	178 59.00 W.	
		51 24.00 N	178 58.97 W.	
		51 24.00 N	178 54.00 W.	
		51 30.00 N	178 54.00 W.	
		51 30.00 N	178 48.00 W.	
		51 32.69 N	178 48.00 W	1
		51 33.95 N	178 48.00 W.	
18	Amatignak I	51 18.00 N	178 54.00 W.	
		51 18.00 N	179 5.30 W	1
		51 18.00 N	179 6.75 W.	
		51 18.00 N	179 12.00 W.	
		51 6.00 N	179 12.00 W.	
		51 6.00 N	179 0.00 W.	
		51 12.00 N	179 0.00 W.	
		51 12.00 N	178 54.00 W.	
19	Amchitka Pass Center	51 30.00 N	179 48.00 W.	
		51 30.00 N	180 0.00 W.	
		51 24.00 N	180 0.00 W.	
		51 24.00 N	179 48.00 W.	
20	Amchitka Pass West	51 36.00 N	179 54.00 E.	
		51 36.00 N	179 36.00 E.	
		51 30.00 N	179 36.00 E.	
		51 30.00 N	179 45.00 E.	
		51 27.00 N	179 48.00 E.	
		51 24.00 N	179 48.00 E.	
		51 24.00 N	179 54.00 E.	
21	Petrel Bank	52 51.00 N	179 12.00 W.	
		52 51.00 N	179 24.00 W.	
		52 48.00 N	179 24.00 W.	
		52 48.00 N	179 30.00 W.	
		52 42.00 N	179 30.00 W.	
		52 42.00 N	179 36.00 W.	
		52 36.00 N	179 36.00 W.	
		52 36.00 N	179 48.00 W.	
		52 30.00 N	179 48.00 W.	
		52 30.00 N	179 42.00 E.	
		52 24.00 N	179 42.00 E.	
		52 24.00 N	179 36.00 E.	
		52 12.00 N	179 36.00 E.	
		52 12.00 N	179 36.00 W.	
		52 24.00 N	179 36.00 W.	
		52 24.00 N	179 30.00 W.	
		52 30.00 N	179 30.00 W.	
		52 30.00 N	179 24.00 W.	
		52 36.00 N	179 24.00 W.	
		52 36.00 N	179 18.00 W.	
		52 42.00 N	179 18.00 W.	

TABLE 24 TO PART 679.—EXCEPT AS NOTED, LOCATIONS IN THE ALEUTIAN ISLANDS HABITAT CONSERVATION AREA OPEN TO NONPELAGIC TRAWL FISHING—Continued

Area No.	Name	Latitude	Longitude	Footnote
		52 42.00 N	179 12.00 W.	
22	Rat I./Amchitka I. South	51 21.00 N	179 36.00 E.	
		51 21.00 N	179 18.00 E.	
		51 18.00 N	179 18.00 E.	
		51 18.00 N	179 12.00 E.	
		51 23.77 N	179 12.00 E	1
		51 24.00 N	179 10.20 E.	
		51 24.00 N	179 0.00 E.	
		51 36.00 N	178 36.00 E.	
		51 36.00 N	178 24.00 E.	
		51 42.00 N	178 24.00 E.	
		51 42.00 N	178 6.00 E.	
		51 48.00 N	178 6.00 E.	
		51 48.00 N	177 54.00 E.	
		51 54.00 N	177 54.00 E.	
		51 54.00 N	178 12.00 E.	
		51 48.00 N	178 12.00 E.	
		51 48.00 N	178 17.09 E	1
		51 48.00 N	178 20.60 E.	
		51 48.00 N	178 24.00 E.	
		52 6.00 N	178 24.00 E.	
		52 6.00 N	178 12.00 E.	
		52 0.00 N	178 12.00 E.	
		52 0.00 N	178 11.01 E	1
		52 0.00 N	178 5.99 E.	
		52 0.00 N	177 54.00 E.	
		52 9.00 N	177 54.00 E.	
		52 9.00 N	177 42.00 E.	
		52 0.00 N	177 42.00 E.	
		52 0.00 N	177 48.00 E.	
		51 54.00 N	177 48.00 E.	
		51 54.00 N	177 30.00 E.	
		51 51.00 N	177 30.00 E.	
		51 51.00 N	177 24.00 E.	
		51 45.00 N	177 24.00 E.	
		51 45.00 N	177 30.00 E.	
		51 48.00 N	177 30.00 E.	
		51 48.00 N	177 42.00 E.	
		51 42.00 N	177 42.00 E.	
		51 42.00 N	178 0.00 E.	
		51 39.00 N	178 0.00 E.	
		51 39.00 N	178 12.00 E.	
		51 36.00 N	178 12.00 E.	
		51 36.00 N	178 18.00 E.	
		51 30.00 N	178 18.00 E.	
		51 30.00 N	178 24.00 E.	
		51 24.00 N	178 24.00 E.	
		51 24.00 N	178 36.00 E.	
		51 30.00 N	178 36.00 E.	
		51 24.00 N	178 48.00 E.	
		51 18.00 N	178 48.00 E.	
		51 18.00 N	178 54.00 E.	
		51 12.00 N	178 54.00 E.	
		51 12.00 N	179 30.00 E.	
		51 18.00 N	179 30.00 E.	
		51 18.00 N	179 36.00 E.	
23	Amchitka I. North	51 42.00 N	179 12.00 E.	
		51 42.00 N	178 57.00 E.	
		51 36.00 N	178 56.99 E.	
		51 36.00 N	179 0.00 E.	
		51 33.62 N	179 0.00 E	2
		51 30.00 N	179 5.00 E.	
		51 30.00 N	179 18.00 E.	
		51 36.00 N	179 18.00 E.	
		51 36.00 N	179 12.00 E.	
24	Pillar Rock	52 9.00 N	177 30.00 E.	
		52 9.00 N	177 18.00 E.	
		52 6.00 N	177 18.00 E.	

TABLE 24 TO PART 679.—EXCEPT AS NOTED, LOCATIONS IN THE ALEUTIAN ISLANDS HABITAT CONSERVATION AREA OPEN TO NONPELAGIC TRAWL FISHING—Continued

Area No.	Name	Latitude	Longitude	Footnote
		52 6.00 N	177 30.00 E.	
25	Murray Canyon	51 48.00 N	177 12.00 E.	
		51 48.00 N	176 48.00 E.	
		51 36.00 N	176 48.00 E.	
		51 36.00 N	177 0.00 E.	
		51 39.00 N	177 0.00 E.	
		51 39.00 N	177 6.00 E.	
		51 42.00 N	177 6.00 E.	
		51 42.00 N	177 12.00 E.	
26	Buldir	52 6.00 N	177 12.00 E.	
		52 6.00 N	177 0.01 E.	
		52 6.00 N	177 0.00 E.	
		52 12.00 N	177 0.00 E.	
		52 12.00 N	176 54.00 E.	
		52 9.00 N	176 54.00 E.	
		52 9.00 N	176 48.00 E.	
		52 0.00 N	176 48.00 E.	
		52 0.00 N	176 36.00 E.	
		52 6.00 N	176 36.00 E.	
		52 6.00 N	176 24.00 E.	
		52 12.00 N	176 24.00 E.	
		52 12.00 N	176 12.00 E.	
		52 18.00 N	176 12.00 E.	
		52 18.00 N	176 30.00 E.	
		52 24.00 N	176 30.00 E.	
		52 24.00 N	176 0.00 E.	
		52 18.00 N	176 0.00 E.	
		52 18.00 N	175 54.00 E.	
		52 20.79 N	175 54.00 E	1
		52 22.38 N	175 54.00 E.	
		52 24.00 N	175 54.00 E.	
		52 24.00 N	175 48.00 E.	
		52 30.00 N	175 48.00 E.	
		52 30.00 N	175 36.00 E.	
		52 36.00 N	175 36.00 E.	
		52 36.00 N	175 24.00 E.	
		52 24.00 N	175 24.00 E.	
		52 24.00 N	175 30.00 E.	
		52 18.00 N	175 30.00 E.	
		52 18.00 N	175 36.00 E.	
		52 24.00 N	175 36.00 E.	
		52 24.00 N	175 42.00 E.	
		52 12.00 N	175 54.00 E.	
		52 6.00 N	175 54.00 E.	
		52 6.00 N	175 48.00 E.	
		52 0.00 N	175 48.00 E.	
		52 0.00 N	175 54.00 E.	
		51 54.00 N	175 54.00 E.	
		51 54.00 N	175 36.00 E.	
		51 42.00 N	175 36.00 E.	
		51 42.00 N	175 30.00 E.	
		51 36.00 N	175 30.00 E.	
		51 36.00 N	175 36.00 E.	
		51 30.00 N	175 36.00 E.	
		51 30.00 N	175 42.00 E.	
		51 36.00 N	175 42.00 E.	
		51 36.00 N	176 0.00 E.	
		52 0.00 N	176 0.00 E.	
		52 0.00 N	176 6.00 E.	
		52 6.00 N	176 6.00 E.	
		52 6.00 N	176 12.00 E.	
		52 0.00 N	176 12.00 E.	
		52 0.00 N	176 30.00 E.	
		51 54.00 N	176 30.00 E.	
		51 54.00 N	177 0.00 E.	
		52 0.00 N	177 0.00 E.	
		52 0.00 N	177 0.01 E.	
		52 0.00 N	177 12.00 E	6
	Buldir donut	51 48.00 N	175 48.00 E	5

TABLE 24 TO PART 679.—EXCEPT AS NOTED, LOCATIONS IN THE ALEUTIAN ISLANDS HABITAT CONSERVATION AREA OPEN TO NONPELAGIC TRAWL FISHING—Continued

Area No.	Name	Latitude	Longitude	Footnote
		51 48.00 N	175 42.00 E	5
		51 45.00 N	175 42.00 E	5
		51 45.00 N	175 48.00 E	5, 7
27	Buldir Mound	51 54.00 N	176 24.00 E.	
		51 54.00 N	176 18.00 E.	
		51 48.00 N	176 18.00 E.	
		51 48.00 N	176 24.00 E.	
28	Tahoma Canyon	52 0.00 N	175 18.00 E.	
		52 0.00 N	175 12.00 E.	
		51 42.00 N	175 12.00 E.	
		51 42.00 N	175 24.00 E.	
		51 54.00 N	175 24.00 E.	
		51 54.00 N	175 18.00 E.	
29	Walls Plateau	52 24.00 N	175 24.00 E.	
		52 24.00 N	175 12.00 E.	
		52 18.00 N	175 12.00 E.	
		52 18.00 N	175 0.00 E.	
		52 12.00 N	175 0.00 E.	
		52 12.00 N	174 42.00 E.	
		52 6.00 N	174 42.00 E.	
		52 6.00 N	174 36.00 E.	
		52 0.00 N	174 36.00 E.	
		52 0.00 N	174 42.00 E.	
		51 54.00 N	174 42.00 E.	
		51 54.00 N	174 48.00 E.	
		52 0.00 N	174 48.00 E.	
		52 0.00 N	174 54.00 E.	
		52 6.00 N	174 54.00 E.	
		52 6.00 N	175 18.00 E.	
		52 12.00 N	175 24.00 E.	
30	Semichi I	52 30.00 N	175 6.00 E.	
		52 30.00 N	175 0.00 E.	
		52 36.00 N	175 0.00 E.	
		52 36.00 N	174 48.00 E.	
		52 42.00 N	174 48.00 E.	
		52 42.00 N	174 33.00 E.	
		52 36.00 N	174 33.00 E.	
		52 36.00 N	174 24.00 E.	
		52 39.00 N	174 24.00 E.	
		52 39.00 N	174 0.00 E.	
		52 42.00 N	173 54.00 E.	
		52 45.16 N	173 54.00 E	1
		52 46.35 N	173 54.00 E.	
		52 54.00 N	173 54.00 E.	
		52 54.00 N	173 30.00 E.	
		52 48.00 N	173 30.00 E.	
		52 48.00 N	173 36.00 E.	
		52 36.00 N	173 36.00 E.	
		52 36.00 N	173 54.00 E.	
		52 18.00 N	173 54.00 E.	
		52 18.00 N	174 30.00 E.	
		52 30.00 N	174 30.00 E.	
		52 30.00 N	174 48.00 E.	
		52 24.00 N	174 48.00 E.	
		52 24.00 N	175 6.00 E.	
31	Agattu South	52 18.00 N	173 54.00 E.	
		52 18.00 N	173 24.00 E.	
		52 9.00 N	173 24.00 E.	
		52 9.00 N	173 36.00 E.	
		52 6.00 N	173 36.00 E.	
		52 6.00 N	173 54.00 E.	
32	Attu I. North	53 3.00 N	173 24.00 E.	
		53 3.00 N	173 6.00 E.	
		53 0.00 N	173 6.00 E.	
		53 0.00 N	173 24.00 E.	

TABLE 24 TO PART 679.—EXCEPT AS NOTED, LOCATIONS IN THE ALEUTIAN ISLANDS HABITAT CONSERVATION AREA OPEN TO NONPELAGIC TRAWL FISHING—Continued

Area No.	Name	Latitude	Longitude	Footnote
33	Attu I. West	52 54.00 N 52 54.00 N 52 48.00 N 52 48.00 N	172 12.00 E. 172 0.00 E. 172 0.00 E. 172 12.00 E.	
34	Stalemate Bank	53 0.00 N 53 0.00 N 52 54.00 N 52 54.00 N	171 6.00 E. 170 42.00 E. 170 42.00 E. 171 6.00 E.	

Note: Unless otherwise footnoted, each area is delineated by connecting in order the coordinates listed by straight lines. Except for the Amlia North/Seguam donut and the Buldir donut, each area delineated in the table is open to nonpelagic trawl gear fishing. The remainder of the entire Aleutian Islands subarea and the areas delineated by the coordinates for the Amlia North/Seguam and Buldir donuts are closed to nonpelagic trawl gear fishing, as specified at § 679.22. Unless otherwise noted, the last set of coordinates for each area is connected to the first set of coordinates for the area by a straight line. The projected coordinate system is North American Datum 1983, Albers.

[1] The connection of these coordinates to the next set of coordinates is by a line extending in a clockwise direction from these coordinates along the shoreline at mean lower-low water to the next set of coordinates.

[2] The connection of these coordinates to the next set of coordinates is by a line extending in a counter clockwise direction from these coordinates along the shoreline at mean lower-low water to the next set of coordinates.

[3] The connection of these coordinates to the first set of coordinates for this area is by a line extending in a clockwise direction from these coordinates along the shoreline at mean lower-low water to the first set of coordinates.

[4] The connection of these coordinates to the first set of coordinates for this area is by a line extending in a counter clockwise direction from these coordinates along the shoreline at mean lower-low water to the first set of coordinates.

[5] The area specified by this set of coordinates is closed to fishing with nonpelagic trawl gear.

[6] This set of coordinates is connected to the first set of coordinates listed for the area by a straight line.

[7] The last coordinate for the donut is connected to the first set of coordinates for the donut by a straight line.

TABLE 25 TO PART 679.—BOWERS RIDGE HABITAT CONSERVATION ZONE

Area number	Name	Latitude	Longitude
1	Bowers Ridge	55 10.50 N 54 54.50 N 54 5.83 N 52 40.50 N 52 44.50 N 54 15.50 N	178 27.25 E 177 55.75 E 179 20.75 E 179 55.00 W 179 26.50 W 179 54.00 W
2	Ulm Plateau	55 5.00 N 55 5.00 N 54 34.00 N 54 34.00 N	177 15.00 E 175 60.00 E 175 60.00 E 177 15.00 E

Note: Each area is delineated by connecting the coordinates in the order listed by straight lines. The last set of coordinates for each area is connected to the first set of coordinates for the area by a straight line. Projected coordinate system is North American Datum 1983, Albers.

TABLE 26 TO PART 679.—GULF OF ALASKA CORAL HABITAT PROTECTION AREAS

Area number	Name	Latitude	Longitude
1	Cape Ommaney 1	56 10.85 N 56 11.18 N 56 9.53 N 56 9.52 N	135 5.83 W 135 7.17 W 135 7.68 W 135 7.20 W
2	Fairweather FS2	58 15.00 N 58 15.00 N 58 13.92 N 58 13.92 N	138 52.58 W 138 54.08 W 138 54.08 W 138 52.58 W
3	Fairweather FS1	58 16.00 N 58 16.00 N 58 13.17 N	138 59.25 W 139 9.75 W 138 59.25 W
4	Fairweather FN2	58 24.10 N 58 24.10 N 58 22.55 N 58 22.55 N	139 14.58 W 139 18.50 W 139 18.50 W 139 14.58 W
5	Fairweather FN1	58 27.42 N 58 27.42 N 58 26.32 N	139 17.75 W 139 19.08 W 139 19.08 W

TABLE 26 TO PART 679.—GULF OF ALASKA CORAL HABITAT PROTECTION AREAS—Continued

Area number	Name	Latitude	Longitude
		58 26.32 N	139 17.75 W

Note: Each area is delineated by connecting the coordinates in the order listed by straight lines. The last set of coordinates for each area is connected to the first set of coordinates for the area by a straight line. Projected coordinate system is North American Datum 1983, Albers.

TABLE 27 TO PART 679.—GULF OF ALASKA SLOPE HABITAT CONSERVATION AREAS

Area number	Name	Latitude	Longitude
1	Yakutat	58 47.00 N 58 47.00 N 58 37.00 N 58 36.97 N	139 55.00 W 140 32.00 W 140 32.00 W 139 54.99 W
2	Cape Suckling	59 50.00 N 59 50.00 N 59 40.00 N 59 40.00 N	143 20.00 W 143 30.00 W 143 30.00 W 143 20.00 W
3	Kayak I.	59 35.00 N 59 40.00 N 59 30.00 N 59 25.00 N 59 25.00 N	144 0.00 W 144 25.00 W 144 50.00 W 144 50.00 W 144 2.00 W
4	Middleton I. east	59 32.31 N 59 32.13 N 59 20.00 N 59 18.85 N	145 29.09 W 145 51.14 W 145 51.00 W 145 29.39 W
5	Middleton I. west	59 14.64 N 59 15.00 N 59 10.00 N 59 8.74 N	146 29.63 W 147 0.00 W 147 0.00 W 146 30.16 W
6	Cable	58 40.00 N 59 6.28 N 59 0.00 N 58 34.91 N	148 0.00 W 149 0.28 W 149 0.00 W 147 59.85 W
7	Albatross Bank	56 16.00 N 56 16.00 N 56 11.00 N 56 10.00 N	152 40.00 W 153 20.00 W 153 20.00 W 152 40.00 W
8	Shumagin I.	54 51.49 N 54 40.00 N 54 35.00 N 54 36.00 N	157 42.52 W 158 10.00 W 158 10.00 W 157 42.00 W
9	Sanak I.	54 12.86 N 54 0.00 N 53 53.00 N 54 5.00 N	162 13.54 W 163 15.00 W 163 15.00 W 162 12.00 W
10	Unalaska I.	53 26.05 N 53 6.92 N 52 55.71 N 53 13.05 N	165 55.55 W 167 19.40 W 167 18.20 W 165 55.55 W

Note: Each area is delineated by connecting the coordinates in the order listed by straight lines. The last set of coordinates for each area is connected to the first set of coordinates for the area by a straight line. Projected coordinate system is North American Datum 1983, Albers.

[FR Doc. 06–5761 Filed 6–23–06; 2:06 pm]

BILLING CODE 3510–22–P

Proposed Rules

Federal Register
Vol. 71, No. 124
Wednesday, June 28, 2006

This section of the FEDERAL REGISTER contains notices to the public of the proposed issuance of rules and regulations. The purpose of these notices is to give interested persons an opportunity to participate in the rule making prior to the adoption of the final rules.

DEPARTMENT OF AGRICULTURE

Agricultural Marketing Service

7 CFR Parts 1000, 1001, 1005, 1006, 1007, 1030, 1032, 1033, 1124, 1126, and 1131

[Docket No. AO–14–A74, et al.; DA–06–01]

Milk in the Northeast and Other Marketing Areas; Notice of Intent To Reconvene National Hearing on Proposed Amendments to Tentative Marketing Agreements and Orders

7 CFR part	Marketing area	AO Nos.
1001	Northeast	AO–14–A74
1005	Appalachian	AO–388–A18
1006	Florida	AO–356–A39
1007	Southeast	AO–366–A47
1030	Upper Midwest	AO–361–A40
1032	Central	AO–313–A49
1033	Mideast	AO–166–A73
1124	Pacific Northwest	AO–368–A35
1126	Southwest	AO–231–A68
1131	Arizona Las-Vegas.	AO–271–A40

AGENCY: Agricultural Marketing Service, USDA.

ACTION: Proposed rule; notice of intent to reconvene national hearing.

SUMMARY: To assure that any changes to manufacturing allowance factors used in Federal order Class III and Class IV product price formulas are appropriate and reflective of manufacturing costs, the Department of Agriculture (Department) will be reconvening the national hearing held January 24–27, 2006, in Alexandria, Virginia. Additional proposals addressing the Federal order Class III and Class IV price formulas are also requested for further consideration in the reconvened hearing.

DATES: Additional proposals are due on or before September 30, 2006.

ADDRESSES: Additional proposals should be sent to the following address: Attn: Gino Tosi, USDA/AMS/Dairy Programs, Order Formulation and Enforcement Branch, Stop 0231–Room 2971, 1400 Independence Avenue, SW., Washington, DC 20250–0231, (202) 720–7183.

FOR FURTHER INFORMATION CONTACT: Gino Tosi, Associate Deputy Administrator, USDA/AMS/Dairy Programs, Order Formulation and Enforcement Branch, Stop 0231–Room 2971, 1400 Independence Avenue, SW., Washington, DC 20250–0231, (202) 720–7183, e-mail address: *gino.tosi@usda.gov.*

SUPPLEMENTARY INFORMATION: On January 24–27, 2006, the Department conducted a public hearing to consider changes to the manufacturing (make) allowances used to establish Class III and Class IV prices in all Federal milk marketing orders. During that hearing, evidence was presented to update plant manufacturing costs using the 2005 California Department of Food and Agriculture (CDFA) and the Rural Business Cooperative Service (RBCS) manufacturing costs surveys. Before a decision on whether or not to change the make allowances used in establishing Class III and Class IV prices, the Department would like to include in the analysis data on plant manufacturing costs currently being compiled by Cornell University or any other pertinent data or information that would be publicly available. The data being collected by Cornell University represents a cross-section of the entire dairy industry—large, medium and small plants from various geographical regions. Because of the significance of make allowance factors in Class III and Class IV pricing formulas on the dairy industry, the Department wants to be certain that the best possible data is available in making a decision concerning any possible changes. Accordingly, the Department is reopening the hearing to take additional evidence.

The Department also is soliciting additional proposals that seek possible changes to other components of the Class III and Class IV price formulas. The Department recognizes the need to ensure that these pricing formulas are reflective of actual marketing conditions. Consequently, all interested parties are invited to submit proposals that address all components of Class III and IV pricing formulas. Proposals should be submitted by September 30, 2006.

The Department will issue a separate notice announcing the date, location and scope of the reconvened hearing.

Prior documents in this proceeding:

Notice of Hearing: Issued December 30, 2005; published January 5, 2006 (71 FR 545).

List of Subjects in 7 CFR Parts 1000, 1001, 1005, 1006, 1007, 1030, 1032, 1033, 1124, 1126, and 1131.

Milk marketing orders.

The authority citation for 7 CFR parts 1000, 1001, 1005, 1006, 1007, 1030, 1032, 1033, 1124, 1126, and 1131 continues to read as follows:

Authority: 7 U.S.C. 601–674.

Dated: June 23, 2006.

Lloyd C. Day,

Administrator, Agricultural Marketing Service.

[FR Doc. 06–5763 Filed 6–27–06; 8:45 am]

BILLING CODE 3410–02–P

DEPARTMENT OF ENERGY

Office of Energy Efficiency and Renewable Energy

10 CFR Part 431

[Docket No. EERE–2006–STD–0125]

RIN 1904–AB58

Energy Conservation Standards for Refrigerated Bottled or Canned Beverage Vending Machines: Public Meeting and Availability of the Framework Document

AGENCY: Office of Energy Efficiency and Renewable Energy, U.S. Department of Energy.

ACTION: Notice of public meeting and availability of the Framework Document.

SUMMARY: The U.S. Department of Energy (DOE or Department) will hold an informal public meeting to present its proposed methodologies for conducting this rulemaking, discuss issues relevant to this rulemaking proceeding, and initiate stakeholder interaction in this rulemaking proceeding. The Department is also interested in information that will assist it in establishing energy conservation standards for refrigerated bottled or canned beverage vending machines. (These types of equipment are referred

to collectively hereafter as ''beverage vending machines.'') The Department encourages written comments on these subjects. This effort is the result of the directive in the Energy Policy Act of 2005 to DOE to establish energy conservation standards for such equipment by August 8, 2009. To inform stakeholders and facilitate this process, DOE has prepared a Framework Document, a draft of which is available at *http://www.eere.energy.gov/buildings/appliance_standards.*

DATES: The Department will hold a public meeting on July 11, 2006, from 9 a.m. to 5 p.m. EDT in Washington, DC. Any person who requesting to speak at the public meeting should submit a request to speak before 4 p.m., July 3, 2006. The Department must receive a signed original and an electronic copy of statement to be given at the public meeting before 4 p.m., July 3, 2006. Written comments on the Framework Document are welcome and encouraged following the public meeting and should be submitted by July 27, 2006.

ADDRESSES: The public meeting will be held at the U.S. Department of Energy, Forrestal Building, Room 1E–245, 1000 Independence Avenue, SW., Washington, DC 20585–0121. (Please note that foreign nationals participating in the public meeting are subject to advance security screening procedures. If a foreign national wishes to participate in the public meeting, please inform DOE of this fact as soon as possible by contacting Ms. Brenda Edwards-Jones at (202) 586–2945 so that the necessary procedures can be completed.)

Stakeholders may submit comments, identified by docket number EERE–2006–STD–0125 and/or RIN number 1904–AB58, by any of the following methods:

- Federal eRulemaking Portal: *http://www.regulations.gov*. Follow the instructions for submitting comments.
- E-mail: *beveragevending.rulemaking@ee.doe.gov*. Include EERE–2006–STD–0125 and/or RIN 1904–AB58 in the subject line of the message.
- Mail: Ms. Brenda Edwards-Jones, U.S. Department of Energy, Building Technologies Program, Mailstop EE–2J, Framework Document for Commercial Refrigeration Equipment, EERE–2006–STD–0125 and/or RIN 1904–AB58, 1000 Independence Avenue, SW., Washington, DC 20585–0121. Telephone: (202) 586–2945. Please submit one signed paper original.
- Hand Delivery/Courier: Ms. Brenda Edwards-Jones, U.S. Department of Energy, Building Technologies Program, Room 1J–018, 1000 Independence Avenue, SW, Washington, DC 20585–0121.

Instructions: All submissions received must include the agency name and docket number or Regulatory Information Number (RIN) for this rulemaking.

Docket: For access to the docket to read background documents or comments received, go to the U.S. Department of Energy, Forrestal Building, Room 1J–018 (Resource Room of the Building Technologies Program), 1000 Independence Avenue, SW., Washington, DC 20585–0121, Telephone Number (202) 586–9127, between 9 a.m. and 4 p.m., Monday through Friday, except Federal holidays. Please call Ms. Brenda Edwards-Jones at the above telephone number for additional information regarding visiting the Resource Room. Please note that the Department's Freedom of Information Reading Room (formerly Room 1E–190 at the Forrestal Building) is no longer housing rulemaking materials.

FOR FURTHER INFORMATION CONTACT: James Raba, U.S. Department of Energy, Office of Energy Efficiency and Renewable Energy, Building Technologies, EE–2J, 1000 Independence Avenue, SW., Washington, DC 20585–0121, (202) 586–8654. E-mail: *Jim.Raba@ee.doe.gov*. Thomas DePriest, U.S. Department of Energy, Office of General Counsel, GC–72, 1000 Independence Avenue, SW., Washington, DC 20585–0121, (202) 586–9507. E-mail: *thomas.depriest@hq.doe.gov.*

SUPPLEMENTARY INFORMATION: Part B of Title III of the Energy Policy and Conservation Act of 1975 (EPCA), 42 U.S.C 6291 *et seq.,* established an energy conservation program for consumer products other than automobiles. The National Energy Conservation Policy Act of 1978 (NECPA), 42 U.S.C. 6311 *et seq.,* amended EPCA to add Part C of Title III, which established an energy conservation program for certain industrial equipment. The Energy Policy Act of 1992 (EPACT 1992), Public Law 102–486, included amendments to EPCA, that expanded Title III to include certain commercial equipment. The recent Energy Policy Act of 2005 (EPACT 2005), Public Law 109–58, updated several existing standards and test procedures, prescribed definitions, standards, and test procedures for certain new covered products and covered equipment, and mandated that the Secretary of Energy (the Secretary) commence rulemakings to develop test procedures and standards for certain other new covered products and covered equipment.

In particular, section 135(c)(4) of EPACT 2005 amends section 325 of EPCA by adding, in part, new subsection 325(v)(2), (3) and (4), 42 U.S.C. 6295(v)(2), (3) and (4), which direct the Secretary to issue by rule, no later than August 8, 2009, energy conservation standards for refrigerated bottled or canned beverage vending machines manufactured on or after August 8, 2012. In addition, section 135(b) of EPACT 2005 amends section 323 of EPCA by adding, in part, new subsections 323(b)(15) (42 U.S.C.6293(b)(15)) and 323(f) (6293(f)), which, respectively, state that the test procedure for refrigerated bottled or canned beverage vending machines shall be based on American National Standards Institute (ANSI)/American Society of Heating, Refrigerating and Air-Conditioning Engineers (ASHRAE) Standard 32.1–2004, ''Methods of Testing for Rating Vending Machines for Bottled, Canned or Other Sealed Beverages,'' and direct the Secretary to prescribe testing requirements for this equipment not later than August 8, 2007. The Department intends to address the test procedure and testing requirements for beverage vending machines under a separate rulemaking.

To begin this rulemaking, the Department prepared a Framework Document to explain the issues, analyses, and process it is considering for the development of energy conservation standards for beverage vending machines. The main focus of the public meeting will be to discuss the analyses and issues contained in various sections of the Framework Document. For each item listed, the Department will make a presentation with some discussion to follow. In addition, the Department will also make a brief presentation on the rulemaking process for beverage vending machines. The Department encourages those who wish to participate in the public meeting to obtain the Framework Document and be prepared to discuss its contents. A copy of the draft Framework Document is available at *http://www.eere.energy.gov/buildings/appliance_standards.* However, public meeting participants need not limit their comments to the topics in the Framework Document. The Department is also interested in receiving comments concerning other relevant issues that participants believe would affect energy conservation standards for beverage vending machines. The Department also welcomes all interested parties, whether or not they participate in the public meeting, to submit in writing by July 27,

2006, comments and information on the matters addressed in the Framework Document and on other matters relevant to consideration of standards for beverage vending machines.

The public meeting will be conducted in an informal conference-style. During the public meeting, there shall be no discussion of proprietary information, costs or prices, market shares, or other commercial matters regulated by the U.S. antitrust laws.

After the public meeting and the expiration of the period for submitting written statements, the Department will begin collecting data, conducting the analyses as discussed in the Framework Document and reviewing the comments received.

Anyone who would like to participate in the public meeting, receive meeting materials, or be added to the DOE mailing list to receive future notices and information regarding beverage vending machines, should contact Ms. Brenda Edwards-Jones at (202) 586–2945.

Issued in Washington, DC, on June 22, 2006.

Alexander A. Karsner,

Assistant Secretary, Energy Efficiency and Renewable Energy.

[FR Doc. 06–5838 Filed 6–27–06; 8:45 am]

BILLING CODE 6450–01–P

FEDERAL DEPOSIT INSURANCE CORPORATION

12 CFR Part 327

RIN 3064–AD07

Dividends

AGENCY: Federal Deposit Insurance Corporation.

ACTION: Proposed rule; extension of comment period.

SUMMARY: On May 18, 2006, the Federal Deposit Insurance Corporation (FDIC) issued a notice of proposed rulemaking with request for comments on the implementation of dividends, as required by the Federal Deposit Insurance Act, as amended by the Federal Deposit Insurance Reform Act (''Reform Act'') (see 71 FR 28804). The FDIC is extending the comment period on that notice of proposed rulemaking to August 16, 2006. This action will allow interested persons additional time to analyze the issues and prepare their comments.

DATES: Comments must be received on or before August 16, 2006.

ADDRESSES: You may submit comments, identified by RIN number 3064–AD07 by any of the following methods:

- *Agency Web site: http://www.FDIC.gov/regulations/laws/federal/propose.html.*
- *Mail:* Robert E. Feldman, Executive Secretary, Attention: Comments/Legal ESS, Federal Deposit Insurance Corporation, 550 17th Street, NW., Washington, DC 20429.
- *Hand Delivered/Courier:* The guard station at the rear of the 550 17th Street, N.W. Building (located on F Street), on business days between 7 a.m. and 5 p.m.
- *E-mail: comments@FDIC.gov.* Include RIN number 3064–AD07 in the subject line of the message.

Instructions: Submissions received must include the agency name and RIN for this rulemaking. Comments received will be posted without change to *http://www.FDIC.gov/regulations/laws/federal/propose.html,* including any personal information provided.

FOR FURTHER INFORMATION CONTACT: Munsell W. St. Clair, Senior Policy Analyst, Division of Insurance and Research, (202) 898–8967; Donna M. Saulnier, Senior Assessment Policy Specialist, Division of Finance, (703) 562–6167; and Kymberly K. Copa, Counsel, Legal Division, (202) 898–8832.

SUPPLEMENTARY INFORMATION: On May 18, 2006, the FDIC requested comment on its proposal to implement the dividend requirements for an initial two-hear period. The proposed rule would sunset on December 31, 2008, and addresses the method for the calculation, declaration, and payment of dividends, and administrative appeals of individual dividend amounts.

The proposed rule on dividends is just one of three notices of proposed rulemaking to implement certain aspects of the Reform Act published by the FDIC on the same date. At that time, the FDIC also published proposed rules on the one-time assessment credit (see 71 FR 28809) and certain procedural and operational changes to its risk-based assessments regulations in part 327 (see 71 FR 28790). In addition, the Reform Act requires the FDIC to prescribe rules on the designated reserve ratio and risk-based assessments. Those proposed rules are expected to be published in the coming weeks.

The FDIC has determined that it would be most effective for comment purposes to have a longer period of overlap between the pending proposed rules on credits, dividends, and operational changes to the risk-based assessments regulations, and the upcoming proposed rules on the designated reserve ratio and risk-based assessments. All of these proposals relate in one way or another to risk-based assessments, and commenters should have a period of time during which they could, if they so choose, review all of the proposals together.

Recently, ING Bank, fsb and Nationwide Bank requested that the FDIC extend the closing date for comments on the pending proposed rules to coincide with the closing date for comments on the upcoming proposed rules. While the FDIC understands the concerns expressed, a 30-day extension should provide sufficient comment period overlap to permit all of the proposals to be reviewed together, giving interested parties 90 days to comment on the three pending proposals and allowing FDIC staff to consider all comments in a timely manner.

Dated at Washington, DC this 20th day of June, 2006.

By order of the Board of Directors.

Federal Deposit Insurance Corporation.

Robert E. Feldman,

Executive Secretary.

[FR Doc. 06–5834 Filed 6–27–06; 8:45 am]

BILLING CODE 6714–01–P

FEDERAL DEPOSIT INSURANCE CORPORATION

12 CFR Part 327

RIN 3064–AD08

One-Time Assessment Credit

AGENCY: Federal Deposit Insurance Corporation.

ACTION: Proposed rule; extension of comment period.

SUMMARY: On May 18, 2006, the Federal Deposit Insurance Corporation (FDIC) issued a notice of proposed rulemaking with request for comments on the implementation of the one-time assessment credit for certain eligible insured depository institutions, as required by the Federal Deposit Insurance Act, as amended by the Federal Deposit Insurance Reform Act (''Reform Act'') (see 71 FR 28809). The FDIC is extending the comment period on that notice of proposed rulemaking to August 16, 2006. This action will allow interested persons additional time to analyze the issues and prepare their comments.

DATES: Comments must be received on or before August 16, 2006.

ADDRESSES: You may submit comments, identified by RIN number 3064–AD08 by any of the following methods:

- *Agency Web site: http://www.FDIC.gov/regulations/laws/federal/propose.html.*

• *Mail:* Robert E. Feldman, Executive Secretary, Attention: Comments/Legal ESS, Federal Deposit Insurance Corporation, 550 17th Street, NW., Washington, DC 20429.

• *Hand Delivered/Courier:* The guard station at the rear of the 550 17th Street Building (located on F Street), on business days between 7 a.m. and 5 p.m.

• *E-mail: comments@FDIC.gov.* Include RIN number 3064–AD08 in the subject line of the message.

Instructions: Submissions received must include the agency name and RIN for this rulemaking. Comments received will be posted without change to *http://www.FDIC.gov/regulations/laws/federal/propose.html,* including any personal information provided.

FOR FURTHER INFORMATION CONTACT: Munsell W. St. Clair, Senior Policy Analyst, Division of Insurance and Research, (202) 898–8967; Donna M. Saulnier, Senior Assessment Policy Specialist, Division of Finance, (703) 562–6167; and Kymberly K. Copa, Counsel, Legal Division, (202) 898–8832.

SUPPLEMENTARY INFORMATION: On May 18, 2006, the FDIC requested comment on its proposal to implement the one-time assessment credit. The proposed rule addresses: the aggregate amount of the one-time credit; the institutions that are eligible to receive credits; and the amount of each eligible institution's credit, which for some institutions may be largely dependent on how the FDIC defines ''successor'' for these purposes. The proposed rule also would establish the qualifications and procedures governing the application of assessment credits, and provide a reasonable opportunity for an institution to challenge administratively the amount of the credit.

The proposed rule on the one-time assessment credit is just one of three notices of proposed rulemaking to implement certain aspects of the Reform Act published by the FDIC on the same date. At that time, the FDIC also published proposed rules on dividends (see 71 FR 28804) and certain procedural and operational changes to its risk-based assessments regulations in part 327 (see 71 FR 28790). In addition, the Reform Act requires the FDIC to prescribe rules on the designated reserve ratio and risk-based assessments. Those proposed rules are expected to be published in the coming weeks.

The FDIC has determined that it would be most effective for comment purposes to have a longer period of overlap between the pending proposed rules on credits, dividends, and operational changes to the risk-based assessments regulations, and the upcoming proposed rules on the designated reserve ratio and risk-based assessments. All of these proposals relate in one way or another to risk-based assessments, and commenters should have a period of time during which they could, if they so choose, review all of the proposals together.

Recently, ING Bank, fsb and Nationwide Bank requested that the FDIC extend the closing date for comments on the pending proposed rules to coincide with the closing date for comments on the upcoming proposed rules. While the FDIC understands the concerns expressed, a 30-day extension should provide sufficient comment period overlap to permit all of the proposals to be reviewed together, giving interested parties 90 days to comment on the three pending proposals and allowing FDIC staff to consider all comments in a timely manner.

Dated at Washington, DC this 20th day of June, 2006.

By order of the Board of Directors.

Federal Deposit Insurance Corporation.

Robert E. Feldman,

Executive Secretary.

[FR Doc. 06–5839 Filed 6–27–06; 8:45 am]

BILLING CODE 6714–01–P

FEDERAL DEPOSIT INSURANCE CORPORATION

12 CFR Part 327

RIN 3064–AD03

Assessments

AGENCY: Federal Deposit Insurance Corporation.

ACTION: Proposed rule; extension of comment period.

SUMMARY: On May 18, 2006, the Federal Deposit Insurance Corporation (FDIC) issued a notice of proposed rulemaking with request for comments on revisions to 12 CFR part 327 (see 71 FR 28790). The rulemaking proposed to make the deposit insurance assessment system react more quickly and more accurately to changes in institutions' risk profiles, and in so doing to eliminate several causes for complaint by insured depository institutions. The proposed rule also would make changes necessitated by the recently enacted Federal Deposit Insurance Reform Act. The FDIC is extending the comment period on that notice of proposed rulemaking to August 16, 2006. This action will allow interested persons additional time to analyze the issues and prepare their comments.

DATES: Comments must be received on or before August 16, 2006.

ADDRESSES: You may submit comments, identified by RIN number 3064–AD03 by any of the following methods:

• *Agency Web site: http://www.FDIC.gov/regulations/laws/federal/propose.html.*

• *Mail:* Robert E. Feldman, Executive Secretary, Attention: Comments/Legal ESS, Federal Deposit Insurance Corporation, 550 17th Street, NW., Washington, DC 20429.

• *Hand Delivered/Courier:* The guard station at the rear of the 550 17th Street Building (located on F Street), on business days between 7 a.m. and 5 p.m.

• *E-mail: comments@FDIC.gov.* Include RIN number 3064-AD03 in the subject line of the message.

Instructions: Submissions received must include the agency name and RIN for this rulemaking. Comments received will be posted without change to *http://www.FDIC.gov/regulations/laws/federal/propose.html,* including any personal information provided.

FOR FURTHER INFORMATION CONTACT: Munsell W. St. Clair, Senior Policy Analyst, Division of Insurance and Research, (202) 898–8967; Donna M. Saulnier, Senior Assessment Policy Specialist, Division of Finance, (703) 562–6167; and Christopher Bellotto, Counsel, Legal Division, (202) 898–3801.

SUPPLEMENTARY INFORMATION: On May 18, 2006, the FDIC requested comment on its proposal to make certain procedural and operational changes to its risk-based assessments regulations. The proposed rule would provide for assessment collection after each quarter ends, would require institutions with $300 million or more in assets to determine their assessment bases using average daily deposit balances, and would eliminate the float deduction used to determine the assessment base. In addition, the rules governing assessments of institutions that go out of business would be simplified; newly insured institutions would be assessed for the assessment period in which they become insured; prepayment and double payment options would be eliminated; institutions would have 90 days from each quarterly certified statement invoice to file requests for review and requests for revision; and the rules governing quarterly certified statement invoices would be adjusted for a quarterly assessment system and for a three-year retention period rather than the current five-year period.

The proposed rule to make these procedural and operational changes to the risk-based assessments regulations is just one of three notices of proposed rulemaking to implement certain aspects of the Reform Act published by the FDIC on the same date. At that time, the FDIC also published proposed rules on dividends (see 71 FR 28804) and the one-time assessment credit (see 71 FR 28809). In addition, the Reform Act requires the FDIC to prescribe rules on the designated reserve ratio and risk-based assessments. Those proposed rules are expected to be published in the coming weeks.

The FDIC has determined that it would be most effective for comment purposes to have a longer period of overlap between the pending proposed rules on credits, dividends, and operational changes to the risk-based assessments regulations, and the upcoming proposed rules on the designated reserve ratio and risk-based assessments. All of these proposals relate in one way or another to risk-based assessments, and commenters should have a period of time during which they could, if they so choose, review all of the proposals together.

Recently, ING Bank, fsb and Nationwide Bank requested that the FDIC extend the closing date for comments on the pending proposed rules to coincide with the closing date for comments on the upcoming proposed rules. While the FDIC understands the concerns expressed, a 30-day extension should provide sufficient comment period overlap to permit all of the proposals to be reviewed together, giving interested parties 90 days to comment on the three pending proposals and allowing FDIC staff to consider all comments in a timely manner.

Dated at Washington, DC this 20th day of June, 2006.

By order of the Board of Directors.

Federal Deposit Insurance Corporation.

Robert E. Feldman,

Executive Secretary.

[FR Doc. 06–5865 Filed 6–27–06; 8:45 am]

BILLING CODE 6714–01–P

NATIONAL CREDIT UNION ADMINISTRATION

12 CFR Part 740

RIN 3133–AD18

Revisions to the Official Sign Indicating Insured Status

AGENCY: National Credit Union Administration (NCUA).

ACTION: Proposed rule with request for comments.

SUMMARY: NCUA proposes to revise the official sign indicating a credit union's share accounts are insured by the NCUA to reflect recent share insurance increases and by including a statement that NCUA-insured share accounts are backed by the full faith and credit of the United States Government. This proposal is required to comply with the Federal Deposit Insurance Reform Act of 2005 (Reform Act) and the Federal Deposit Insurance Reform Conforming Amendments Act of 2005 (Conforming Amendments Act).

DATES: Comments must be received on or before August 11, 2006.

ADDRESSES: You may submit comments by any of the following methods (Please send comments by one method only):

- Federal eRulemaking Portal: *http://www.regulations.gov.* Follow the instructions for submitting comments.
- NCUA Web Site: *http://www.ncua.gov/RegulationsOpinionsLaws/proposed_regs/proposed_regs.html.* Follow the instructions for submitting comments.
- E-mail: Address to *regcomments@ncua.gov.* Include ''[Your name] Comments on Proposed Rule Part 740'' in the e-mail subject line.
- Fax: (703) 518–6319. Use the subject line described above for e-mail.
- Mail: Address to Mary Rupp, Secretary of the Board, National Credit Union Administration, 1775 Duke Street, Alexandria, Virginia 22314–3428.
- Hand Delivery/Courier: Same as mail address.

Public Inspection: All public comments are available on the agency's Web site at *http://www.ncua.gov/RegulationsOpinionsLaws/comments* as submitted, except as may not be possible for technical reasons. Public comments will not be edited to remove any identifying or contact information. Paper copies of comments may be inspected in NCUA's law library at 1775 Duke Street, Alexandria, Virginia 22314, by appointment weekdays between 9 a.m. and 3 p.m. To make an appointment, call (703) 518–6546 or send an e-mail to *OGC Mail @ncua.gov.*

FOR FURTHER INFORMATION CONTACT: Frank Kressman, Staff Attorney, at the above address, or telephone: (703) 518–6540.

SUPPLEMENTARY INFORMATION:

A. Background

The Reform Act and Conforming Amendments Act, respectively Pub. L. 109–171 and Pub. L. 109–173, amended the share insurance provisions of the Federal Credit Union Act in a number of ways, including increasing share insurance coverage for certain accounts. 12 U.S.C. 1781–1790d. In March 2006, NCUA issued an interim final rule to implement many of those statutory amendments. 71 FR 14631 (March 23, 2006). Additionally, the Conforming Amendments Act also requires that NCUA's official sign, relating to the insurance of share accounts, include a statement that share accounts insured by NCUA, through the National Credit Union Share Insurance Fund, are backed by the full faith and credit of the United States Government. Section 740.4 of NCUA's regulations establishes the content and physical appearance of the official sign and dictates where insured credit unions must display the sign. This proposed rule amends § 740.4 to comply with that statutory requirement and amends § 740.4 and § 740.5 to reflect recent share insurance increases.

The Conforming Amendments Act also imposes a penalty on an insured credit union that violates any statutory or regulatory provision related to the official sign. Specifically, an insured credit union is subject to a penalty of up to $100 a day for every day it is in violation of statutory or regulatory requirements. This proposed rule amends § 740.4 to reflect this statutory provision.

B. Comment Period

As a matter of agency policy, NCUA usually gives the public 60 days to comment on proposed rules. NCUA Interpretive Ruling and Policy Statement No. 87–2. In this instance, NCUA has determined that 50 days to August 11, 2006, is sufficient to allow all interested parties to comment given the nature and relative simplicity of this proposed rule. Additionally, this slightly shorter time period better enables NCUA to meet a statutory deadline for issuing this regulation.

C. Supply of New Signs and Compliance

NCUA will provide all insured credit unions with an initial supply of the revised official sign with a blue background and white lettering at no cost to the credit unions and will make a downloadable graphic available on the agency Web site for credit unions to use on their Web sites. In the final rule and in a Letter to Credit Unions, NCUA will inform insured credit unions how and when they will receive their initial supply of revised official signs and set a reasonable period for insured credit

unions to comply with the rule's requirements to display the official sign. In any event, a credit union will not be considered in violation of § 740.4 unless the credit union fails to display the revised signs after receiving them from NCUA and after a reasonable compliance period for making changes at teller windows, Web sites, and, if applicable, to advertisements. NCUA requests comment on whether a compliance date of 60 days after receiving the signs from NCUA would be a reasonable period for credit unions to come into compliance.

Regulatory Procedures

Regulatory Flexibility Act

The Regulatory Flexibility Act requires NCUA to prepare an analysis to describe any significant economic impact a proposed rule may have on a substantial number of small credit unions (those under ten million dollars in assets). This rule clarifies that share accounts insured by NCUA are backed by the full faith and credit of the United States Government without imposing any additional regulatory burden. This rule would not have a significant economic impact on a substantial number of small credit unions, and, therefore, a regulatory flexibility analysis is not required.

Paperwork Reduction Act

NCUA has determined that the proposed rule would not increase paperwork requirements under the Paperwork Reduction Act of 1995 and regulations of the Office of Management and Budget.

Executive Order 13132

Executive Order 13132 encourages independent regulatory agencies to consider the impact of their actions on state and local interests. In adherence to fundamental federalism principles, NCUA, an independent regulatory agency as defined in 44 U.S.C. 3502(5), voluntarily complies with the executive order. The proposed rule would not have substantial direct effects on the states, on the connection between the national government and the states, or on the distribution of power and responsibilities among the various levels of government. NCUA has determined that this proposed rule does not constitute a policy that has federalism implications for purposes of the executive order.

The Treasury and General Government Appropriations Act, 1999—Assessment of Federal Regulations and Policies on Families

The NCUA has determined that this proposed rule would not affect family well-being within the meaning of section 654 of the Treasury and General Government Appropriations Act, 1999, Pub. L. 105–277, 112 Stat. 2681 (1998).

Agency Regulatory Goal

NCUA's goal is to promulgate clear and understandable regulations that impose minimal regulatory burden. We request your comments on whether the proposed rule is understandable and minimally intrusive.

List of Subjects in 12 CFR Part 740

Advertisements, Credit unions.

By the National Credit Union Administration Board on June 22, 2006.

Mary F. Rupp,

Secretary of the Board.

For the reasons discussed above, NCUA proposes to amend 12 CFR part 740 as follows:

PART 740—ACCURACY OF ADVERTISING AND NOTICE OF INSURED STATUS

1. The authority citation for part 740 continues to read as follows:

Authority: 12 U.S.C. 1766, 1781, 1789.

2. Section 740.4 is amended by revising the depiction of the official sign in paragraph (b) with the following depiction of the official sign and by adding new paragraph (f) to read as follows:

§ 740.4 Requirements for the official sign.

* * * * *

(b) * * *

Your savings federally insured to at least $100,000
and backed by the full faith and credit of the United States Government

NCUA

National Credit Union Administration, a U.S. Government Agency

* * * * *

(f) An insured credit union that fails to comply with Section 205(a) of the Federal Credit Union Act regarding the official sign, 12 U.S.C. 1785(a), or any requirement in this part is subject to a penalty of up to $100 per day.

3. Section 740.5(c)(11) is amended by removing ''of $100,000'' and adding in its place ''insurance amount''.

[FR Doc. 06–5742 Filed 6–27–06; 8:45 am]

BILLING CODE 7535–01–P

NATIONAL CREDIT UNION ADMINISTRATION

12 CFR Part 748

Filing Requirements for Suspicious Activity Reports

AGENCY: National Credit Union Administration (NCUA).

ACTION: Notice of proposed rulemaking (NPR).

SUMMARY: The proposed rule describes in greater detail the requirements for reporting and filing a Suspicious Activity Report (SAR) and addresses prompt notification of the board of directors of SAR filings, the confidentiality of reports, and liability protection. NCUA also proposes to change the heading for this part so it more accurately describes its scope. While retaining cross-references in the rule to the SAR form and instructions, these changes will enhance credit union compliance by providing greater detail in the rule on the thresholds and procedures for filing a SAR.

DATES: Comments must be received on or before August 28, 2006.

ADDRESSES: You may submit comments by any of the following methods (Please send comments by one method only):

- *NCUA Web site: http://www.ncua.gov/Regulations OpinionsLaws/proposed_regs/proposed_regs.html.* Follow the instructions for submitting comments.
- *E-mail:* Address to *regcomments@ncua.gov.* Include ''[Your name] Comments on Notice of Proposed Rulemaking (Suspicious Activity Report)'' in the e-mail subject line.
- *Fax:* (703) 518–6319. Use the subject line described above for e-mail.
- *Mail:* Address to Mary Rupp, Secretary of the Board, National Credit Union Administration, 1775 Duke Street, Alexandria, Virginia 22314–3428.
- *Hand Delivery/Courier:* Same as mail address.

FOR FURTHER INFORMATION CONTACT: Linda K. Dent, Staff Attorney, Office of General Counsel, at the above address or telephone (703) 518–6540.

SUPPLEMENTARY INFORMATION: NCUA's policy is to review regulations periodically to ''update, clarify and simplify existing regulations and eliminate redundant and unnecessary provisions.'' Interpretive Ruling and Policy Statement (IRPS) 87–2, Developing and Reviewing Government Regulations. NCUA notifies the public about the review, which is conducted on a rolling basis so that a third of its regulations are reviewed each year. The changes in this proposed rule are the result of NCUA review under IRPS 87–2.

B. Proposed Changes

Suspicious Activity Report

The proposed rule modifies § 748.1(c) by describing more clearly the reportable activity this section covers, identifying important filing procedures, and highlighting record retention requirements. The proposal includes in the rule other key aspects of the SAR process including the confidentiality of the reports, and safe harbor information, as well as, adds a provision requiring a credit union to keep its board of directors promptly informed of its SAR reporting activity.

While the changes expand the amount of information contained in the rule, they do not increase credit unions' regulatory burden. The changes are intended to provide fundamental information about the SAR process in a single location to facilitate the ability of credit unions to quickly access reporting and filing requirements. The board notification provision formalizes a common practice and, together with the other proposed changes, provides consistency with the SAR regulations established by the other Federal Financial Institutions Examination Counsel regulators. The changes are not intended to and do not eliminate the need for credit unions to review the instructions accompanying the SAR form and the requirements of 31 CFR part 103.18, which may be necessary to ensure a report is accurately and fully completed.

Heading

NCUA proposes to revise the heading for part 748 to read ''Security Program, Report of Suspected Crimes, Suspicious Transactions, Catastrophic Acts and Bank Secrecy Act Compliance.'' The amended heading aids users of NCUA Regulations by fully describing the contents of part 748.

Request for Comment

The NCUA Board is interested in receiving comments on the proposed amendments to part 748.

Regulatory Procedures

Regulatory Flexibility Act

The Regulatory Flexibility Act requires NCUA to prepare an analysis to describe any significant economic impact a proposed rule may have on a substantial number of small credit unions (those under $10 million in assets). This proposed rule modifies the language of a preexisting requirement for federally-insured credit unions to file reports of suspected crimes and suspicious activity. The proposed rule, therefore, will not have a significant economic impact on a substantial number of small credit unions and a regulatory flexibility analysis is not required.

Paperwork Reduction Act

The Office of Management and Budget assigned 3133–0094 as the control number for NCUA's Form 2362. NCUA has determined that the proposed amendments will not increase paperwork requirements and a paperwork reduction analysis is not required.

Executive Order 13132

Executive Order 13132 encourages independent regulatory agencies to consider the impact of their actions on state and local interests. In adherence to fundamental federalism principles, NCUA, an independent regulatory agency as defined in 44 U.S.C. 3502(5), voluntarily complies with the executive order. The proposed rule would not have substantial direct effects on the states, on the connection between the national government and the states, or on the distribution of power and responsibilities among the various levels of government. NCUA has determined that this proposed rule does not constitute a policy that has federalism implications for purposes of the executive order.

The Treasury and General Government Appropriations Act, 1999—Assessment of Federal Regulations and Policies on Families

NCUA has determined that this proposed rule would not affect family well-being within the meaning of section 654 of the Treasury and General Government Appropriations Act, 1999, Pub. L. 105–277, 112 Stat. 2681 (1998).

List of Subjects in 12 CFR Part 748

Credit unions, Suspicious Activity Report.

By the National Credit Union Administration Board on June 22, 2006.

Mary Rupp,

Secretary of the Board.

For the reasons stated in the preamble, the National Credit Union Administration proposes to amend 12 CFR part 748 as set forth below:

PART 748—SECURITY PROGRAM, REPORT OF SUSPECTED CRIMES, SUSPICIOUS TRANSACTIONS, CATASTROPHIC ACTS AND BANK SECRECY ACT COMPLIANCE

1. The authority citation for part 748 continues to read as follows:

Authority: 12 U.S.C. 1766(a) and 1786(q); 31 U.S.C. 5311.

2. Section 748.1(c) is revised to read as follows:

§ 748.1 Filing of reports.

* * * * *

(c) *Suspicious Activity Report.* A credit union must file a report of any known or suspected crime or any suspicious transaction related to money laundering activity or a violation of the Bank Secrecy Act. For the purposes of this paragraph (c) *credit union* means a federally-insured credit union and *official* means any member of the board of directors or a volunteer committee.

(1) *Reportable activity. Transaction* for purposes of this paragraph means a deposit, withdrawal, transfer between accounts, exchange of currency, loan, extension of credit, purchase or sale of any stock, bond, share certificate, or other monetary instrument or investment security, or any other payment, transfer, or delivery by, through, or to a financial institution, by whatever means effected. A credit union must report any known or suspected crime or any suspicious transaction related to money laundering or other illegal activity, for example, terrorism financing, loan fraud, or embezzlement, or a violation of the Bank Secrecy Act by sending a completed suspicious activity report (SAR) to the Financial Crimes Enforcement Network (FinCEN) in the following circumstances:

(i) *Insider abuse involving any amount.* Whenever the credit union detects any known or suspected federal criminal violations, or pattern of criminal violations, committed or attempted against the credit union or involving a transaction or transactions conducted through the credit union, where the credit union believes it was either an actual or potential victim of a criminal violation, or series of criminal violations, or that the credit union was used to facilitate a criminal transaction, and the credit union has a substantial basis for identifying one of the credit union's officials, employees, or agents as having committed or aided in the commission of the criminal violation, regardless of the amount involved in the violation;

(ii) *Transactions aggregating $5,000 or more where a suspect can be identified.* Whenever the credit union detects any known or suspected federal criminal violation, or pattern of criminal violations, committed or attempted against the credit union or involving a transaction or transactions conducted through the credit union, and involving or aggregating $5,000 or more in funds or other assets, where the credit union believes it was either an actual or potential victim of a criminal violation, or series of criminal violations, or that the credit union was used to facilitate a criminal transaction, and the credit union has a substantial basis for identifying a possible suspect or group of suspects. If it is determined before filing this report that the identified suspect or group of suspects has used an alias, then information regarding the true identity of the suspect or group of suspects, as well as alias identifiers, such as drivers' licenses or social security numbers, addresses and telephone numbers, must be reported;

(iii) *Transactions aggregating $25,000 or more regardless of potential suspects.* Whenever the credit union detects any known or suspected Federal criminal violation, or pattern of criminal violations, committed or attempted against the credit union or involving a transaction or transactions conducted through the credit union, involving or aggregating $25,000 or more in funds or other assets, where the credit union believes it was either an actual or potential victim of a criminal violation, or series of criminal violations, or that the credit union was used to facilitate a criminal transaction, even though the credit union has no substantial basis for identifying a possible suspect or group of suspects; or

(iv) *Transactions aggregating $5,000 or more that involve potential money laundering or violations of the Bank Secrecy Act.* Any transaction conducted or attempted by, at or through the credit union and involving or aggregating $5,000 or more in funds or other assets, if the credit union knows, suspects, or has reason to suspect:

(A) The transaction involves funds derived from illegal activities or is intended or conducted in order to hide or disguise funds or assets derived from illegal activities (including, without limitation, the ownership, nature, source, location, or control of such funds or assets) as part of a plan to violate or evade any federal law or regulation or to avoid any transaction reporting requirement under Federal law;

(B) The transaction is designed to evade any regulations promulgated under the Bank Secrecy Act; or

(C) The transaction has no business or apparent lawful purpose or is not the sort of transaction in which the particular member would normally be expected to engage, and the credit union knows of no reasonable explanation for the transaction after examining the available facts, including the background and possible purpose of the transaction.

(v) *Exceptions.* A credit union is not required to file a SAR for a robbery or burglary committed or attempted that is reported to appropriate law enforcement authorities, or for lost, missing, counterfeit, or stolen securities and the credit union files a report pursuant to the reporting requirements of 17 CFR 240.17f–1.

(2) *Filing Procedures.* (i) *Timing.* A credit union must file a SAR with FinCEN no later than 30 calendar days from the date the suspicious activity is initially detected, unless there is no identified suspect on the date of detection. If no suspect is identified on the date of detection, a credit union may use an additional 30 calendar days to identify a suspect before filing a SAR. In no case may a credit union take more than 60 days from the date it initially detects a reportable transaction to file a SAR. In situations involving violations requiring immediate attention, such as ongoing money laundering schemes, a credit union must immediately notify, by telephone, an appropriate law enforcement authority and its supervisory authority, in addition to filing a SAR.

(ii) *Content.* A credit union must complete, fully and accurately, SAR form TDF 90–22.47, Suspicious Activity Report (also known as NCUA Form 2362) in accordance with the form's instructions and 31 CFR part 103.18. A copy of the SAR form may be obtained from the credit union resources section of NCUA's Web site, *http://www.ncua.gov,* or the regulatory section of FinCEN's Web site, *http://www.fincen.gov.*

(iii) *Compliance.* Failure to file a SAR as required by the form's instructions and 31 CFR part 103.18 may subject the credit union, its officials, employees, and agents to the assessment of civil money penalties or other administrative actions.

(3) *Retention of Records.* A credit union must maintain a copy of any SAR that it files and the original or business record equivalent of all supporting documentation to the report for a period of five years from the date of the report. Supporting documentation must be identified and maintained by the credit union as such. Supporting documentation is considered a part of the filed report even though it should not be actually filed with the submitted report. A credit union must make all supporting documentation available to appropriate law enforcement authorities and its regulatory supervisory authority upon request.

(4) *Notification to board of directors.* (i) *Generally.* The management of the credit union must promptly notify its board of directors, or a committee designated by the board of directors to receive such notice, of any SAR filed.

(ii) *Suspect is a director or committee member.* If a credit union files a SAR

and the suspect is a director or member of a committee designated by the board of directors to receive notice of SAR filings, the credit union may not notify the suspect, pursuant to 31 U.S.C. 5318(g)(2), but must notify all directors who are not suspects.

(5) *Confidentiality of reports.* SARs are confidential. Any credit union, including its officials, employees, and agents, subpoenaed or otherwise requested to disclose a SAR or the information in a SAR must decline to produce the SAR or to provide any information that would disclose that a SAR was prepared or filed, citing this part, applicable law , for example, 31 U.S.C. 5318(g), or both, and notify NCUA of the request.

(6) *Safe Harbor.* Any credit union, including its officials, employees, and agents, that makes a report of suspected or known criminal violations and suspicious activities to law enforcement and financial institution supervisory authorities, including supporting documentation, are protected from liability for any disclosure in the report, or for failure to disclose the existence of the report, or both, to the full extent provided by 31 U.S.C. 5318(g)(3). This protection applies if the report is filed pursuant to this part or is filed on a voluntary basis.

[FR Doc. E6–10136 Filed 6–27–06; 8:45 am]

BILLING CODE 7535–01–P

DEPARTMENT OF TRANSPORTATION

Federal Aviation Administration

14 CFR Part 39

[Docket No. FAA–2006–23739; Directorate Identifier 2005–NM–240–AD]

RIN 2120–AA64

Airworthiness Directives; Empresa Brasileira de Aeronautica S.A. (EMBRAER) Model EMB–145, –145ER, –145MR, –145LR, –145XR, –145MP, and –145EP Airplanes

AGENCY: Federal Aviation Administration (FAA), Department of Transportation (DOT).

ACTION: Proposed rule; withdrawal.

SUMMARY: The FAA withdraws a notice of proposed rulemaking (NPRM) that proposed a new airworthiness directive (AD) for certain EMBRAER Model EMB–145, –145ER, –145MR, –145LR, –145XR, –145MP, and –145EP airplanes. The proposed AD would have required modifying the routing of wire harness W407 near the fire extinguishing tube in the area of each engine, and installing new supports for related wiring. Since the proposed AD was issued, we have received new data indicating that the identified unsafe condition does not exist. Accordingly, the proposed AD is withdrawn.

ADDRESSES: You may examine the AD docket on the Internet at *http://dms.dot.gov,* or in person at the Docket Management Facility office between 9 a.m. and 5 p.m., Monday through Friday, except Federal holidays. The Docket Management Facility office (telephone (800) 647–5227) is located on the plaza level of the Nassif Building at the U.S. Department of Transportation, 400 Seventh Street SW., Room PL–401, Washington, DC. This docket number is FAA–2006–23739; the directorate identifier for this docket is 2005–NM–240–AD.

FOR FURTHER INFORMATION CONTACT: Todd Thompson, Aerospace Engineer, International Branch, ANM–116, FAA, Transport Airplane Directorate, 1601 Lind Avenue, SW., Renton, Washington 98055–4056; telephone (425) 227–1175; fax (425) 227–1149.

SUPPLEMENTARY INFORMATION:

Discussion

We proposed to amend part 39 of the Federal Aviation Regulations (14 CFR part 39) with a notice of proposed rulemaking (NPRM) for a new AD for certain EMBRAER Model EMB–145, –145ER, –145MR, –145LR, –145XR, –145MP, and –145EP airplanes. That NPRM was published in the **Federal Register** on February 2, 2006 (71 FR 5626). The NPRM would have required modifying the routing of wire harness W407 near the fire extinguishing tube in the area of each engine, and installing new supports for related wiring. The NPRM resulted from reports of chafing of wire harness W407 against the supports and nacelle structure in the engine area. The proposed actions were intended to prevent such chafing, which could result in an engine shutting down during flight.

Actions Since NPRM Was Issued

Since we issued the NPRM, the airplane manufacturer, EMBRAER, has provided additional information concerning the unsafe condition identified in the NPRM. EMBRAER Service Bulletin 145–71–0008, Change 01, dated July 24, 2001 (which was referenced as the appropriate source of service information for accomplishing the proposed actions), addressed chafing of wire harness W407 on the left- and right-hand engines. However, EMBRAER subsequently indicates that the objective of that service bulletin was not considered to be a means to avoid in-flight shutdown (IFSD) and, in fact, wire harness W407 is not engine control related. The harness is related to the engine lip anti-ice system, starter control valve, engine fire detection system, and engine bleed air extraction systems. None of these systems are possible contributors to an uncommanded IFSD. In addition, reported IFSD events in the EMB–145 fleet related to chafing of a different harness—the engine control harness—are associated with the engine manufacturer-provided harness, which is not the subject of EMBRAER Service Bulletin 145–71–0008.

EMBRAER states that chafing (among other things) of the engine control system harness can cause internal failure of the full authority digital engine control (FADEC), which leads to a fuel shutoff valve closure command. However, in May 2001, EMBRAER introduced FADEC internal modifications for airplanes in production to prevent an inadvertent IFSD. Also, for FADECs manufactured before May 2001, Rolls-Royce, the engine manufacturer, developed an external adapter with the same design objectives as those of EMBRAER's internal modifications. These adapters have already been sent to operators to install in their affected airplanes. EMBRAER adds that the engine inspection tasks from the airplane maintenance program have been revised and improved, as well as the engine harness inspection and installation tasks in the aircraft maintenance manual (AMM).

FAA's Conclusions

Upon further consideration, we have determined that the unsafe condition identified in the NPRM does not exist. Accordingly, the NPRM is withdrawn.

We have coordinated this action with the Departamento de Aviação Civil (DAC), which is the airworthiness authority for Brazil. The DAC indicates it is considering cancelling its related airworthiness directive, 2005–10–05, which was effective November 17, 2005.

Withdrawal of the NPRM does not preclude the FAA from issuing another related action or commit the FAA to any course of action in the future.

Regulatory Impact

Since this action only withdraws an NPRM, it is neither a proposed nor a final rule and therefore is not covered under Executive Order 12866, the Regulatory Flexibility Act, or DOT Regulatory Policies and Procedures (44 FR 11034, February 26, 1979).

List of Subjects in 14 CFR Part 39

Air transportation, Aircraft, Aviation safety, Safety.

The Withdrawal

Accordingly, we withdraw the NPRM, Docket No. FAA–2006–23739; Directorate Identifier 2005–NM–240–AD, which was published in the **Federal Register** on February 2, 2006 (71 FR 5626).

Issued in Renton, Washington, on June 21, 2006.

Kalene C. Yanamura,

Acting Manager, Transport Airplane Directorate, Aircraft Certification Service.

[FR Doc. E6–10175 Filed 6–27–06; 8:45 am]

BILLING CODE 4910–13–P

DEPARTMENT OF TRANSPORTATION

Federal Aviation Administration

14 CFR Part 71

[Docket No. FAA–2006–24449; Airspace Docket No. 06–AGL–03]

Proposed Modification of Class E Airspace; Pierre, SD

AGENCY: Federal Aviation Administration (FAA), DOT.

ACTION: Notice of proposed rulemaking.

SUMMARY: This document proposes to modify Class E airspace at Pierre, SD. Standard Instrument Approach Procedures to several Runways have been developed for the Pierre Regional Airport. Controlled airspace extending upward from the surface of the earth is needed to contain aircraft executing these approaches. This action modifies the existing radius of Class E airspace, for Pierre Regional Airport.

DATES: Comments must be received on or before August 20, 2006.

ADDRESSES: Send comments on the proposal to the Docket Management System, U.S. department of Transportation, Room Plaza 401, 400 Seventh Street, SW., Washington, DC 20590–0001. You must identify the Docket Number FAA–2006–24449/ Airspace Docket No. 06–AGL–03, at the beginning of your comments. You may also submit comments on the internet at *http://dms.dot.gov.* You may review the public docket containing the proposal, any comments received, and any final disposition in person in the Dockets Office between 9 a.m. and 5 p.m., Monday through Friday, except Federal holidays. The Docket Office (telephone 1–800–647–5527) is on the plaza level of the Department of Transportation NASSIF Building at the above address.

An informal docket may also be examined during normal business hours at the Air Traffic Division, Airspace Branch, Federal Aviation Administration, 2300 East Devon Avenue, Des Plaines, Illinois.

FOR FURTHER INFORMATION CONTACT: Steve Davis, FAA Terminal Operations, Central Service Area Office, Airspace and Procedures Branch, AGL–530, Federal Aviation Administration, 2300 East Devon Avenue, Des Plaines, Illinois 60018, telephone (847) 294–7131.

SUPPLEMENTARY INFORMATION:

Comments Invited

Interested parties are invited to participate in this proposed rulemaking by submitting such written data, views, or arguments as they may desire. Comments that provide the factual basis supporting the views and suggestions presented are particularly helpful in developing reasoned regulatory decisions on the proposal. Comments are specifically invited on the overall regulatory, aeronautical, economic, environmental, and energy-elated aspects of the proposal.

Communications should identify both docket numbers and be submitted in triplicate to the address listed above. Commenters wishing the FAA to acknowledge receipt of their comments on this document must submit with those comments a self-addressed, stamped postcard on which the following statement is made: ''Comments to Docket No. FAA– 2006–24449/Airspace Docket No. 06–AGL–03.'' The postcard will be date/time stamped and returned to the commenter. All communications received on or before the specified closing date for comments will be considered before taking action on the proposed rule. The proposal contained in this document may be changed in light of comments received. All comments submitted will be available for examination in the Rules Docket, FAA, Great Lakes Region, Office of the Regional Counsel, 2300 East Devon Avenue, Des Plaines, Illinois, both before and after the closing date for comments. A report summarizing each substantive public contact with FAA personnel concerned with this rulemaking will be filed in the docket.

Availability of NPRM's

An electronic copy of this document may be downloaded through the Internet at *http://dms.dot.gov.* Recently published rulemaking documents can also be accessed through the FAA's Web page at *http://www.faa.gov* or the Superintendent of Document's Web page at *http://www.access.gpo.gov/nara.*

Additionally, any person may obtain a copy of this notice by submitting a request to the Federal Aviation Administration, Office of Air Traffic Airspace Management, ATA–400, 800 Independence Avenue, SW., Washington, DC 20591, or by calling (202) 267–8783. Communications must identify both docket numbers for this notice. Persons interested in being placed on a mailing list for future NPRM's should contact the FAA's Office of Rulemaking, (202) 267–9677, to request a copy of Advisory Circular No. 11–2A, Notice of Proposed Rulemaking Distribution System, which describes the application procedure.

The Proposal

The FAA is considering an amendment to 14 CFR part 71 to modify Class E airspace at Pierre, SD, by modifying Class E airspace for the Pierre Regional Airport. Controlled airspace extending upward from the surface of the earth is needed to contain aircraft executing instrument approach procedures. The area would be depicted on appropriate aeronautical charts. Class E airspace areas extending upward from 700 feet or more above the surface of the earth are published in paragraph 6005, and Class E airspace areas designated as surface areas are published in Paragraph 6002, of FAA Order 7400.9N dated September 1, 2005, and effective September 16, 2005, which is incorporated by reference in 14 CFR 71.1. The Class E airspace designations listed in this document would be published subsequently in the Order.

The FAA has determined that this proposed regulation only involves an establishment body of technical regulations for which frequent and routine amendments are necessary to keep them operationally current. Therefore this, proposed regulation—(1) Is not a ''significant regulatory action'' under Executive Order 12866; (2) is not a ''significant rule'' under DOT Regulatory Policies and Procedures (44 FR 11034; February 26, 1979); and (3) does not warrant preparation of a Regulatory Evaluation as the anticipated impact is so minimal. Since this is a routine matter that will only affect air traffic procedures and air navigation, it is certified that this proposed rule will not have a significant economic impact on a substantial number of small entities under the criteria of the Regulatory Flexibility Act.

List of Subjects in 14 CFR Part 71

Airspace, Incorporation by reference, Navigation (air).

The Proposed Amendment

Accordingly, pursuant to the authority delegated to me, the Federal Aviation Administration proposes to amend 14 CFR part 71 as follows:

PART 71—DESIGNATION OF CLASS A, CLASS B, CLASS C, CLASS D, AND CLASS E AIRSPACE AREAS; AIRWAYS; ROUTES; AND REPORTING POINTS

1. The authority citation for part 71 continues to read as follows:

Authority: 49 U.S.C. 106(g), 40103, 40113, 40120; E.O. 10854, 24 FR 9565, 3 CFR, 1959–1963 Comp., p. 389.

§ 71.1 [Amended]

2. The incorporation by reference in 14 CFR 71.1 of the Federal Aviation Administration Order 7400.9N, Airspace Designations and Reporting Points, dated September 1, 2005, and effective September 5, 2005, is amended as follows:

* * * * *

Paragraph 6005 Class E airspace areas extending upward from 700 feet or more above the surface of the earth.

* * * * *

AGL SD E5 Pierre, SD [Revised]

Pierre Regional Airport, SD
(Lat. 44°22′58″ N., long. 100°17′10″ W.)

That airspace extending upward from 700 feet above the surface within a 6.9-mile radius of the Pierre Regional Airport, and within 4.4 miles each side of the Pierre VORTAC 087° radial extending from the 6.8-mile radius to 6.1 miles east of the VORTAC and within 4.4 miles each side of the Pierre VORTAC 265° radial extending from the 6.8-mile radius to 16.1 miles west of the VORTAC, and that airspace extending upward from 1,200 feet above the surface within a 30.5-mile radius of the Pierre VORTAC.

* * * * *

Paragraph 6002 Class E airspace designated as surface areas.

* * * * *

AGL SD E2 Pierre, SD [Revised]

Pierre Regional Airport, SD
(Lat. 44°22′58″ N., long. 100°17′10″ W.)

Within a 4.4-mile radius of the Pierre Regional Airport.

* * * * *

Issued in Des Plaines, Illinois on June 8, 2006.

John A. Clayborn,

Acting Area Director, Central Terminal Operations.

[FR Doc. 06–5733 Filed 6–27–06; 8:45 am]

BILLING CODE 4910–13–M

DEPARTMENT OF TRANSPORTATION

Federal Aviation Administration

14 CFR Part 71

[Docket No. FAA–2006–24450; Airspace Docket No. 06–AGL–04]

Proposed Modification of Class E Airspace; Chamberlain, SD

AGENCY: Federal Aviation Administration (FAA), DOT.

ACTION: Notice of proposed rulemaking

SUMMARY: This document proposes to modify Class E airspace at Chamberlain, SD. Standard Instrument Approach Procedures have been developed for Chamberlain Municipal Airport, Chamberlain, SD. Controlled airspace extending upward from 700 feet or more above the surface of the earth is needed to contain aircraft executing these approaches. This action would increase the area of the existing controlled airspace for Chamberlain, SD.

DATES: Comments must be received on or before August 20, 2006.

ADDRESSES: Send comments on the proposal to the Docket Management System, U.S. Department of Transportation, Room Plaza 401, 400 Seventh Street, SW., Washington, DC 20590–0001. You must identify the docket Number FAA–2006–24450/ Airspace Docket No. 06–AGL–04, at the beginning of your comments. You may also submit comments on the Internet at *http://dms.dot.gov.* You may review the public docket containing the proposal, any comments received, and any final disposition in person in the Dockets Office between 9 a.m. and 5 p.m., Monday through Friday, except Federal holidays. The Docket Office (telephone 1–800–647–5527) is on the plaza level of the Department of Transportation NASSIF Building at the above address.

An informal docket may also be examined during normal business hours at FAA Terminal Operations, Central Service Office, 2300 East Devon Avenue, Des Plaines, Illinois 60018.

FOR FURTHER INFORMATION CONTACT: Steve Davis, FAA Terminal Operations, Central Service Office, Airspace and Procedures Branch, AGL–530, Federal Aviation Administration, 2300 East Devon Avenue, Des Plaines, Illinois 60018, telephone (847) 294–7131.

SUPPLEMENTARY INFORMATION:

Comments Invited

Interested parties are invited to participate in this proposed rulemaking by submitting such written data, views, or arguments as they may desire. Comments that provide the factual basis supporting the views and suggestions presented are particularly helpful in developing reasoned regulatory decisions on the proposal. Comments are specifically invited on the overall regulatory, aeronautical, economic, environmental, and energy-related aspects of the proposal. Communications should identify both docket numbers and be submitted in triplicate to the address listed above. Commenters wishing the FAA to acknowledge receipt of their comments on this document must submit with those comments a self-addressed, stamped postcard on which the following statement is made: ''Comments to Docket No. FAA–2006–24450/Airspace Docket No. 06–AGL–04''. The postcard will be date/time stamped and returned to the commenter. All communications received on or before the specified closing date for comments will be considered before taking action on the proposed rule. The proposal contained in this action may be changed in light of comments received. All comments submitted will be available for examination in the Rules Docket, FAA, Great Lakes Region, Office of the Regional Counsel, 2300 East Devon Avenue, Des Plaines, Illinois, both before and after the closing date for comments. A report summarizing each substantive public contact with FAA personnel concerned with this rulemaking will be filed in the docket.

Availability of NPRM's

An electronic copy of this document may be downloaded through the Internet at *http://dms.dot.gov.* Recently published rulemaking documents can also be accessed through the FAA's Web page at *http://www.faa.gov* or the Superintendent of Document's Web page at *http://www.access.gpo.gov/nara.*

Additionally, any person may obtain a copy of this notice by submitting a request to the Federal Aviation Administration, Office of Air Traffic Airspace Management, ATA–400, 800 Independence Avenue, SW., Washington, DC 20591, or by calling (202) 267–8783. Communications must identify both docket numbers for this notice. Persons interested in being placed on a mailing list for future NPRM's should contact the FAA's Office of Rulemaking, (202) 267–9677, to request a copy of Advisory Circular No. 11–2A, Notice of Proposed Rulemaking Distribution System, which describes the application procedure.

The Proposal

The FAA is considering an amendment to 14 CFR part 71 to modify Class E airspace at Chamberlain, SD, for Chamberlain Municipal Airport. Controlled airspace extending upward from 700 feet above the surface of the earth is needed to contain aircraft executing instrument approach procedures. Class E airspace areas extending upward from 700 feet above the surface of the earth are published in paragraph 6005 of FAA Order 7400.9N dated September 1, 2005, and effective September 16, 2005, which is incorporated by reference in 14 CFR 71.1. The Class E designations listed in this document would be removed subsequently in the Order.

The FAA has determined that this proposed regulation only involves an establishment body of technical regulations for which frequent and routine amendments are necessary to keep them operationally current. Therefore this, proposed regulation—(1) Is not a ''significant regulatory action'' under Executive Order 12866; (2) is not a ''significant rule'' under DOT Regulatory Policies and Procedures (44 FR 11034; February 26, 1979); and (3) does not warrant preparation of a Regulatory Evaluation as the anticipated impact is so minimal. Since this is a routine matter that will only affect air traffic procedures and air navigation, it is certified that this proposed rule will not have a significant economic impact on a substantial number of small entities under the criteria of the Regulatory Flexibility Act.

List of Subjects in 14 CFR Part 71

Airspace, Incorporation by reference, Navigation (air).

The Proposed Amendment

Accordingly, pursuant to the authority delegated to me, the Federal Aviation Administration proposes to amend 14 CFR part 71 as follows:

PART 71—DESIGNATION OF CLASS A, CLASS B, CLASS C, CLASS D, AND CLASS E AIRSPACE AREAS; AIRWAYS; ROUTES; AND REPORTING POINTS

1. The authority citation for part 71 continues to read as follows:

Authority: 49 U.S.C. 106(g), 40103, 40113, 40120; E.O. 10854, 24 FR 9565, 3 CFR, 1959–1963 Comp., p. 389.

§ 71.1 [Amended]

2. The incorporation by reference in 14 CFR 71.1 of the Federal Aviation Administration Order 7400.9N, Airspace Designations and Reporting Points, dated September 1, 2005, and effective September 15, 2005, is amended as follows:

Paragraph 6005 Class E airspace areas extending upward from 700 feet or more above the surface of the earth.

* * * * *

AGL SD E5 Chamberlain, SD [Revised]

Chamberlain Municipal Airport, SD
(Lat. 43°45′58″ N., long. 99°19′17″ W.)

That airspace extending upward from 700 feet above the surface within a 6.4-mile radius of Chamberlain Municipal Airport.

* * * * *

Issued in Des Plaines, Illinois on June 8, 2006.

John A. Clayborn,

Acting Area Director, Central Terminal Operations.

[FR Doc. 06–5732 Filed 6–27–06; 8:45 am]

BILLING CODE 4910–13–M

ENVIRONMENTAL PROTECTION AGENCY

40 CFR Part 60

[EPA–HQ–OAR–2003–0156; FRL–8189–5]

Standards of Performance for New Stationary Sources and Emission Guidelines for Existing Sources: Other Solid Waste Incineration Units: Reconsideration

AGENCY: Environmental Protection Agency (EPA).

ACTION: Notice of reconsideration of final rule; request for public comment; notice of public hearing.

SUMMARY: On December 16, 2005, EPA published a final rule entitled, ''Standards of Performance for New Stationary Sources and Emission Guidelines for Existing Sources: Other Solid Waste Incineration Units.'' Following that final action, the Administrator received a petition for reconsideration. In response to the petition, EPA is announcing its reconsideration of and requesting comment on whether sewage and sludge incinerators should be excluded from the other solid waste incineration units (OSWI) rules.

DATES: *Comments.* Submit comments on or before August 14, 2006. Because of the need to resolve the issues raised in this action in a timely manner, EPA will not grant requests for extensions beyond this date.

Public Hearing. If anyone contacts EPA by July 5, 2006 requesting to speak at a public hearing, EPA will hold a public hearing on July 12, 2006. If you are interested in attending the public hearing, contact Dorothy Apple at (919) 541–4487 to verify that a hearing will be held.

ADDRESSES: *Comments.* Submit your comments, identified by Docket ID No. EPA–HQ–OAR–2003–0156, by one of the following methods:

Web site: http://www.regulations.gov. Follow the online instructions for submitting comments.

E-mail: Send your comments via electronic mail to *a-and-r-docket@epa.gov*, Attention Docket ID No. EPA–HQ–OAR–2003–0156.

Facsimile: Fax your comments to (202) 566–1741, Attention Docket ID No. EPA–HQ–OAR–2003–0156.

Mail: Send your comments to: EPA Docket Center (EPA/DC), EPA, Mailcode 6102T, 1200 Pennsylvania Ave., NW., Washington, DC 20460, Attention Docket ID No. EPA–HQ–OAR–2003–0156.

Hand Delivery: Deliver your comments to: EPA Docket Center (EPA/DC), EPA West Building, Room B108, 1301 Constitution Ave., NW., Washington, DC, 20460, Attention Docket ID No. EPA–HQ–OAR–2003–0156. Such deliveries are accepted only during the normal hours of operation (8:30 a.m. to 4:30 p.m., Monday through Friday, excluding legal holidays), and special arrangements should be made for deliveries of boxed information.

Instructions: Direct your comments to Docket ID No. EPA–HQ–OAR–2003–0156. EPA's policy is that all comments received will be included in the public docket without change and may be made available online at *http://www.regulations.gov*, including any personal information provided, unless the comment includes information claimed to be Confidential Business Information (CBI) or other information whose disclosure is restricted by statute. Do not submit information that you consider to be CBI or otherwise protected through *http://www.regulations.gov* or e-mail. The *http://www.regulations.gov* Web site is an ''anonymous access'' system, which means EPA will not know your identity or contact information unless you provide it in the body of your comment. If you send an e-mail comment directly to EPA without going through *http://www.regulations.gov*, your e-mail address will be automatically captured and included as part of the comment that is placed in the public docket and made available on the Internet. If you submit an electronic comment, EPA recommends that you include your name and other contact information in the body of your comment and with any disk or CD–ROM you submit. If EPA

cannot read your comment due to technical difficulties and cannot contact you for clarification, EPA may not be able to consider your comment. Electronic files should avoid the use of special characters, any form of encryption, and be free of any defects or viruses.

Public Hearing: If a public hearing is held, it will be held at EPA's Campus located at 109 T.W. Alexander Drive in Research Triangle Park, NC, or an alternate site nearby. Persons interested in presenting oral testimony must contact Dorothy Apple at (919) 541–4487 at least 7 days in advance of the hearing. If no one contacts Dorothy Apple in advance of the hearing with a request to present oral testimony at the hearing, we will cancel the hearing. The public hearing will provide interested parties the opportunity to present data, views, or arguments concerning the reconsideration. The record for this action will remain open for 30 days after the date of the hearing to accommodate submittal of information related to the public hearing.

Docket: All documents in the docket are listed in the *http://www.regulations.gov* index. Although listed in the index, some information is not publicly available, e.g., CBI or other information whose disclosure is restricted by statute. Certain other material, such as copyrighted material, is not placed on the Internet and will be publicly available only in hard copy form. Publicly available docket materials are available either electronically at *http://www.regulations.gov* or in hard copy at the EPA Docket Center (EPA/DC), EPA West Building, Room B102, 1301 Constitution Ave., NW., Washington, DC. The Public Reading Room is open from 8:30 a.m. to 4:30 p.m., Monday through Friday, excluding legal holidays. The telephone number for the Public Reading Room is (202) 566–1744, and the telephone number for the EPA Docket Center is (202) 566–1742.

FOR FURTHER INFORMATION CONTACT: Ms. Martha Smith, Natural Resources and Commerce Group, Sector Policies and Programs Division (E143–03), U.S. EPA, Research Triangle Park, North Carolina 27711, (919) 541–2421, e-mail *smith.martha@epa.gov.* For questions about the public hearing, contact Dorothy Apple at (919) 541–4487.

SUPPLEMENTARY INFORMATION:

Organization of This Document. The following outline is provided to aid in locating information in this preamble.

I. General Information
A. Does the reconsideration notice apply to me?
B. How do I obtain a copy of this document and other related information?
II. Background Information
III. Actions We Are Taking
IV. Discussion of Issue for Reconsideration
V. Statutory and Executive Order Reviews
A. Executive Order 12866: Regulatory Planning and Review
B. Paperwork Reduction Act
C. Regulatory Flexibility Act
D. Unfunded Mandates Reform Act
E. Executive Order 13132: Federalism
F. Executive Order 13175: Consultation and Coordination With Indian Tribal Governments
G. Executive Order 13045: Protection of Children From Environmental Health and Safety Risks
H. Executive Order 13211: Actions That Significantly Affect Energy Supply, Distribution or Use
I. National Technology Transfer Advancement Act

I. General Information

A. Does the reconsideration notice apply to me?

Regulated Entities. This reconsideration proceeding potentially affects sewage sludge incinerators. Although there is not a specific North American Industrial Classification System (NAICS) code for sewage sludge incinerators, these units may be operated by municipalities or other entities and the following NAICS codes apply: Non-hazardous incinerators (NAICS 562213); sludge disposal sites (NAICS 562212); and sewage treatment facilities (NAICS 221320). The categories and entities regulated by the final OSWI rules are very small municipal waste combustion (VSMWC) units and institutional waste incineration (IWI) units. The final OSWI emission guidelines and new source performance standards (NSPS) affect the following categories of sources:

Category	NAICS code	Examples of potentially regulated entities
Any State, local, or Tribal government using a VSMWC unit as defined in the regulations.	562213, 92411	Solid waste combustion units burning municipal waste collected from the general public and from residential, commercial, institutional, and industrial sources.
Institutions using an IWI unit as defined in the regulations	922, 6111, 623, 7121	Correctional institutions, primary and secondary schools, camps and national parks.
Any Federal government agency using an OSWI unit as defined in the regulations.	928	Department of Defense (labs, military bases, munition facilities).
Any college or university using an OSWI unit as defined in the regulations.	6113, 6112	Universities, colleges and community colleges.
Any church or convent using an OSWI unit as defined in the regulations.	8131	Churches and convents.
Any civic or religious organization using an OSWI unit as defined in the regulations.	8134	Civic associations and fraternal associations.

This table is not intended to be exhaustive, but rather provides a guide for readers regarding entities that were regulated by the final OSWI rules.

B. How do I obtain a copy of this document and other related information?

Docket. The docket number for this action and the final OSWI new source performance standards (NSPS) (40 CFR part 60, subpart EEEE) and emission guidelines (40 CFR part 60, subpart FFFF) is Docket ID No. EPA–HQ–OAR–2003–0156.

Worldwide Web (WWW). In addition to being available in the docket, electronic copies of the final rule and the notice of reconsideration are available on the WWW through the Technology Transfer Network Web site (TTN). Following signature, EPA posted a copy of the final rule on the TTN's policy and guidance page for newly proposed or promulgated rules at *http://www.epa.gov/ttn/oarpg.* The TTN provides information and technology exchange in various areas of air pollution control.

II. Background Information

Section 129 of the Clean Air Act (CAA), entitled ''Solid Waste Combustion,'' requires EPA to develop and adopt NSPS and emission guidelines for solid waste incineration units pursuant to CAA section 111. Section 111(b) of the CAA requires EPA to establish NSPS for new sources, and

CAA section 111(d) requires EPA to establish procedures for States to submit plans for implementing emission guidelines for existing sources. Congress specifically added section 129 to the CAA to address concerns about emissions from solid waste combustion units. Section 129(a)(1) of the CAA identifies five categories of solid waste incineration units:

(1) Units with a capacity of greater than 250 tons per day (tpd) combusting municipal waste;

(2) Units with a capacity equal to or less than 250 tpd combusting municipal waste;

(3) Units combusting hospital, medical and infectious waste;

(4) Units combusting commercial or industrial waste; and

(5) Unspecified—other categories of solid waste incineration units.

EPA previously developed regulations for each of the listed categories of solid waste incineration units except for the undefined ''other categories of solid waste incineration units.'' On December 9, 2004 (69 FR 71472), EPA proposed NSPS and emission guidelines for OSWI units. EPA received and considered public comments and promulgated final regulations for OSWI units on December 16, 2005.

Following the promulgation of the final OSWI rule, EPA received a petition for reconsideration from the Sierra Club. The purpose of this notice is to initiate a process for responding to one issue raised in the petition.

III. Actions We Are Taking

Today, we are granting reconsideration of and requesting comment on the sewage sludge incinerator issue, an issue raised in the petition for reconsideration. Generally, the Sierra Club contends that sewage sludge incinerators should be regulated as a type of OSWI under CAA section 129. Petitioner notes that the notice of proposal of the OSWI rule did not mention sewage sludge incinerators, and claims that there was no opportunity to comment on EPA's decision not to regulate sewage sludge incinerators under OSWI. Moreover, they argue that EPA's rationale was advanced for the first time in the final rule and supporting documents.

EPA acknowledges that the OSWI proposal notice (69 FR 71472, December 9, 2004) did not specifically mention or request comment on whether sewage sludge incinerators should be regulated under the OSWI rules. EPA did publish notices on April 24, 2000, (65 FR 23459–01) and June 26, 2002, (67 FR 43113) in which EPA indicated that we had decided not to regulate sewage sludge incinerators as a category under CAA section 129 and listing it as an area source category to be regulated under CAA section 112(c)(3) and 112(k)(3). These notices; however, did not request public comment on whether sewage sludge incinerators should be regulated under section 129 or section 112. We have decided to grant reconsideration of this issue in the interest of ensuring full opportunity for comment. The issue is described in further detail below.

Our final decision on reconsideration for all the other issues raised by petitioners, and for which we are not granting reconsideration today, will be issued no later than the date by which we take final action on the sewage sludge incinerator issue discussed in this notice. We are requesting public comment only on the sewage sludge incinerator issue identified in this notice. We will not respond to any comments addressing other aspects of the OSWI rule or any related rulemakings.

IV. Discussion of Issue for Reconsideration

EPA acknowledges that earlier notices indicated that sewage sludge incinerators would be considered OSWI units (62 FR 1868, January 14, 1997; 63 FR 66087, December 1, 1998). However, as we discussed in the preamble to the final OSWI rules and the response to comment document, later notices conveyed the fact we intended to regulate sewage sludge incinerators under section 112 of the CAA, not under section 129. As early as April 2000, EPA indicated that it no longer intended to regulate sewage sludge incinerators under CAA section 129:

> The Agency has decided not to regulate sewage sludge incinerators as a category under section 129 of the Clean Air Act. * * * The Agency believes that sewage sludge generated by publicly-owned treatment works (POTWs) and combusted in SSI is ''solid waste.'' However, this sludge is from a municipal source, and not from ''commercial or industrial establishments or the general public.'' Therefore, SSIs that combust this sludge are not ''solid waste incineration units'' and section 129 does not apply to them. Virtually all of the SSIs that would be candidates for regulation combust sludge from POTWs and, thus are not covered under section 129.

Unified Agenda, (65 FR 23459–01, April 24, 2000).

EPA's intent to regulate these sources under CAA section 112 was also made clear when sewage sludge incinerators were included as an additional area source category listed pursuant to CAA sections 112(c)(3) and 112(k)(3)(B)(ii) (67 FR 43113, June 26, 2002). In addition, in previous regulatory activities, EPA was unable to identify any sewage sludge incinerators that were major sources (see 67 FR 6521, February 12, 2002). As discussed fully in the preamble to the final OSWI rules and the supporting response to comment document, the language of CAA section 129(h) makes clear the Congressional intent for CAA regulations under section 129 or section 112 to be mutually exclusive. Accordingly, source categories regulated by CAA section 112 may not also be subject to a CAA section 129 regulation.

However, we acknowledge that neither the April 2000 nor the June 2002 notice was a final regulatory action, and that no opportunity for public comment was available following either publication. Furthermore, as we did not discuss our intent to regulate sewage sludge incinerators under CAA section 112 in the proposed OSWI rules notice, we accept that we have not offered opportunity for comment on this issue. Therefore, we are granting reconsideration of, and requesting comment on, the issue of excluding sewage sludge incinerators from regulation under CAA section 129 under the OSWI rules.

V. Statutory and Executive Order Reviews

A. Executive Order 12866: Regulatory Planning and Review

Under Executive Order 12866 (58 FR 51735, October 4, 1993), EPA must determine whether the regulatory action is ''significant'' and; therefore, subject to review by OMB and the requirements of the Executive Order. The Executive Order defines ''significant regulatory action'' as one that is likely to result in a rule that may:

(1) Have an annual effect on the economy of $100 million or more or adversely affect in a material way the economy, a sector of the economy, productivity, competition, jobs, the environment, public health or safety, or State, local, or Tribal governments or communities;

(2) Create a serious inconsistency or otherwise interfere with an action taken or planned by another agency;

(3) Materially alter the budgetary impact of entitlements, grants, user fees, or loan programs, or the rights and obligations of recipients thereof; or

(4) Raise novel legal or policy issues arising out of legal mandates, the President's priorities, or the principles set forth in the Executive Order.

It has been determined that this notice of reconsideration is not a ''significant regulatory action'' under the terms of

Executive Order 12866 and is therefore not subject to OMB review.

B. Paperwork Reduction Act

This action does not impose any new information collection burden. We are not proposing any new paperwork as part of today's notice. With this action, we are seeking public comments on an issue raised in a petition for reconsideration of the OSWI rule. The Office of Management and Budget has previously approved the information collection requirements contained in the existing regulations (40 CFR part 60, subparts EEEE and FFFF) under the provisions of the Paperwork Reduction Act, 44 U.S.C. 3501 *et seq.* and has assigned OMB control number 2060–0563 and EPA ICR No. 2163.02 for subpart EEEE, and OMB control number 2060–0562 and EPA ICR No. 2164.02 for subpart FFFF. A copy of the OMB approved Information Collection Requests (ICR), may be obtained from Susan Auby, Collection Strategies Division, U.S. EPA (2822T), 1200 Pennsylvania Avenue, NW., Washington, DC 20460, by e-mail at *auby.susan@epa.gov,* or by calling (202) 566–1672.

Burden means the total time, effort, or financial resources expended by persons to generate, maintain, retain, or disclose or provide information to or for a Federal agency. This includes the time needed to review instructions; develop, acquire, install, and utilize technology and systems for the purposes of collecting, validating, and verifying information, processing and maintaining information, and disclosing and providing information; adjust the existing ways to comply with any previously applicable instructions and requirements; train personnel to be able to respond to a collection of information; search data sources; complete and review the collection of information; and transmit or otherwise disclose the information.

An agency may not conduct or sponsor and a person is not required to respond to a collection of information unless it displays a currently valid OMB control number. The OMB control numbers for EPA's regulations in 40 CFR are listed in 40 CFR part 9.

C. Regulatory Flexibility Act

The Regulatory Flexibility Act generally requires an agency to prepare a regulatory flexibility analysis of any rule subject to notice and comment rulemaking requirements under the Administrative Procedure Act or any other statute unless the agency certifies that the rule will not have a significant economic impact on a substantial number of small entities. Small entities include small businesses, small organizations, and small governmental jurisdictions.

For purposes of assessing the impacts of the final rules on small entities, small entity is defined as follows:

1. A small business that is an ultimate parent entity in the regulated industry that has a gross annual revenue less than $6.0 million (this varies by industry category, ranging up to $10.5 million for North American Industrial Classification System (NAICS) code 562213 (very small municipal waste combustors)), based on Small Business Administration's size standards;

2. A small governmental jurisdiction that is a government of a city, county, town, school district or special district with a population of less than 50,000; or

3. A small organization that is any not-for-profit enterprise that is independently owned and operated and is not dominant in its field.

After considering the economic impact of today's notice of reconsideration on small entities, I certify that this action will not have a significant economic impact on a substantial number of small entities. This action does not propose any changes to the final OSWI rule and will not impose any requirements on small entities. EPA has determined that it is not necessary to prepare a regulatory flexibility analysis in connection with this reconsideration notice.

D. Unfunded Mandates Reform Act

Title II of the Unfunded Mandates Reform Act (UMRA) of 1995, Public Law 104–4, establishes requirements for Federal Agencies to assess the effects of their regulatory actions on State, local, and Tribal governments and the private sector. Under section 202 of the UMRA, EPA generally must prepare a written statement, including a cost-benefit analysis, for proposed and final rules with ''Federal mandates'' that may result in expenditures by State, local, and Tribal governments, in the aggregate, or by the private sector, of $100 million or more in any one year. Before promulgating an EPA rule for which a written statement is needed, section 205 of the UMRA generally requires EPA to identify and consider a reasonable number of regulatory alternatives and adopt the least costly, most cost-effective, or least burdensome alternative that achieves the objectives of the rule. The provisions of section 205 do not apply when they are inconsistent with applicable law. Moreover, section 205 allows EPA to adopt an alternative other than the least costly, most cost-effective, or least burdensome alternative if EPA publishes with the final rule an explanation why that alternative was not adopted.

Before EPA establishes any regulatory requirements that may significantly or uniquely affect small governments, including Tribal governments, EPA must have developed, under section 203 of the UMRA, a small government agency plan. The plan must provide for notifying potentially affected small governments, enabling officials of affected small governments to have meaningful and timely input in the development of EPA's regulatory proposals with significant Federal intergovernmental mandates, and informing, educating, and advising small governments on compliance with the regulatory requirements.

EPA has determined that this notice of reconsideration does not contain a Federal mandate that may result in expenditures of $100 million or more for State, local, and Tribal governments, in the aggregate, or the private sector in any one year. We are not proposing to change the final OSWI rule. Thus, today's notice of reconsideration is not subject to the requirements of section 202 and 205 of the UMRA. In addition, EPA has determined that the notice of reconsideration contains no regulatory requirements that might significantly or uniquely affect small governments. Therefore, the notice of reconsideration is not subject to the requirements of section 203 of the UMRA.

E. Executive Order 13132: Federalism

Executive Order 13132 (64 FR 43255, August 10, 1999), requires EPA to develop an accountable process to ensure ''meaningful and timely input by State and local officials in the development of regulatory policies that have Federalism implications.'' ''Policies that have Federalism implications'' is defined in the Executive Order to include regulations that have ''substantial direct effects on States, on the relationship between the national government and the States, or on the distribution of power and responsibilities among various levels of government.''

This notice of reconsideration does not have Federalism implications. It will not have substantial direct effects on the States, on the relationship between the national Government and the States, or on the distribution of power and responsibilities among the various levels of government, as specified in Executive Order 13132. The notice of reconsideration will not impose direct compliance costs on State or local governments, and will not

preempt State law. Thus, Executive Order 13132 does not apply to today's notice of reconsideration.

F. Executive Order 13175: Consultation and Coordination With Indian Tribal Governments

Executive Order 13175, entitled ''Consultation and Coordination with Indian Tribal Governments'' (65 FR 67249, November 9, 2000), requires EPA to develop an accountable process to ensure ''meaningful and timely input by Tribal officials in the development of regulatory policies that have Tribal implications.'' ''Policies that have Tribal implications'' is defined in the Executive Order to include regulations that have ''substantial direct effects on relationship between the Federal Government and the Indian tribes, or on the distribution of power and responsibilities between the Federal Government and Indian tribes.''

This notice of reconsideration does not have Tribal implications, as specified in Executive Order 13175. It will not have substantial direct effects on Tribal governments, on the relationship between the Federal Government and Indian tribes, or on the distribution of power and responsibilities between the Federal Government and Indian tribes, as specified in Executive Order 13175. Thus, Executive Order 13175 does not apply to this notice of reconsideration.

G. Executive Order 13045: Protection of Children From Environmental Health and Safety Risks

Executive Order 13045 (62 FR 19885, April 23, 1997), applies to any rule that: (1) Is determined to be ''economically significant'' as defined under Executive Order 12866, and (2) concerns an environmental health or safety risk that EPA has reason to believe may have a disproportionate effect on children. If the regulatory action meets both criteria, EPA must evaluate the environmental health or safety effects of the planned rule on children, and explain why the planned regulation is preferable to other potentially effective and reasonably feasible alternatives EPA considered.

EPA interprets Executive Order 13045 as applying only to those regulatory actions that are based on health or safety risks, such that the analysis required under section 5–501 of the Executive Order has the potential to influence the regulation. This notice of reconsideration is not subject to Executive Order 13045 because it is not economically significant, and the original OSWI rules were based on technology performance and not on health and safety risks.

H. Executive Order 13211: Actions That Significantly Affect Energy Supply, Distribution or Use

This notice of reconsideration is not subject to Executive Order 13211, ''Actions Concerning Regulations That Significantly Affect Energy Supply, Distribution, and Use'' (66 FR 28355, May 22, 2001) because it is not a significant regulatory action under Executive Order 12866.

I. National Technology Transfer Advancement Act

CAA section 12(d) of the National Technology Transfer and Advancement Act (NTTAA) of 1995 (Pub. L. 104–113; 15 U.S.C. 272 note) directs EPA to use voluntary consensus standards in their regulatory activities unless to do so would be inconsistent with applicable law or otherwise impractical. Voluntary consensus standards are technical standards (e.g., materials specifications, test methods, sampling procedures, business practices) developed or adopted by one or more voluntary consensus bodies. The NTTAA directs EPA to provide Congress, through annual reports to OMB, with explanations when an agency does not use available and applicable voluntary consensus standards.

This notice of reconsideration does not involve technical standards. EPA's compliance with section 12(d) of the NTTAA has been addressed in the preamble of the underlying final OSWI rule. (70 FR 74891, December 16, 2005)

List of Subjects in 40 CFR Part 60

Environmental protection, Administrative practice and procedure, Air pollution control, Intergovernmental relations, Reporting and recordkeeping requirements.

Dated: June 20, 2006.

Stephen L. Johnson,

Administrator.

[FR Doc. E6–10095 Filed 6–27–06; 8:45 am]

BILLING CODE 6560–50–P

ENVIRONMENTAL PROTECTION AGENCY

40 CFR Part 63

[EPA–R09–OAR–2006–0496; FRL–8189–9]

Delegation of National Emission Standards for Hazardous Air Pollutants for Source Categories; State of Arizona; Maricopa County Air Quality Department; State of California; San Joaquin Valley Unified Air Pollution Control District; State of Nevada; Nevada Division of Environmental Protection

AGENCY: Environmental Protection Agency (EPA).

ACTION: Proposed rule.

SUMMARY: Pursuant to section 112(l) of the 1990 Clean Air Act, EPA granted delegation of specific national emission standards for hazardous air pollutants (NESHAPs) to the Maricopa County Air Quality Department on May 16, 2006, to the San Joaquin Valley Unified Air Pollution Control District on October 31, 2005, and to the Nevada Division of Environmental Protection on May 9, 2006. EPA is proposing to revise the Code of Federal Regulations to reflect the current delegation status of NESHAPs in Arizona, California, and Nevada.

DATES: Any comments on this proposal must arrive by July 28, 2006.

ADDRESSES: Submit comments, identified by docket number EPA–R09–OAR–2006–0496, by one of the following methods:

1. Federal eRulemaking Portal: *http://www.regulations.gov.* Follow the on-line instructions.
2. E-mail: *steckel.andrew@epa.gov.*
3. Mail or deliver: Andrew Steckel (Air–4), U.S. Environmental Protection Agency Region IX, 75 Hawthorne Street, San Francisco, CA 94105–3901.

Instructions: All comments will be included in the public docket without change and may be made available online at *http://www.regulations.gov,* including any personal information provided, unless the comment includes Confidential Business Information (CBI) or other information whose disclosure is restricted by statute. Information that you consider CBI or otherwise protected should be clearly identified as such and should not be submitted through *http://www.regulations.gov* or e-mail. *http://www.regulations.gov* is an ''anonymous access'' system, and EPA will not know your identity or contact information unless you provide it in the body of your comment. If you send e-mail directly to EPA, your e-mail address

will be automatically captured and included as part of the public comment. If EPA cannot read your comment due to technical difficulties and cannot contact you for clarification, EPA may not be able to consider your comment.

Docket: The index to the docket for this action is available electronically at *http://www.regulations.gov* and in hard copy at EPA Region IX, 75 Hawthorne Street, San Francisco, California. While all documents in the docket are listed in the index, some information may be publicly available only at the hard copy location (*e.g.*, copyrighted material), and some may not be publicly available in either location (*e.g.*, CBI). To inspect the hard copy materials, please schedule an appointment during normal business hours with the contact listed in the **FOR FURTHER INFORMATION CONTACT** section.

FOR FURTHER INFORMATION CONTACT: Mae Wang, EPA Region IX, (415) 947–4124, *wang.mae@epa.gov.*

SUPPLEMENTARY INFORMATION: This document concerns the delegation of unchanged NESHAPs to the Maricopa County Air Quality Department, the San Joaquin Valley Unified Air Pollution Control District, and the Nevada Division of Environmental Protection. In the Rules and Regulations section of this **Federal Register**, EPA is amending regulations to reflect the current delegation status of NESHAPs in Arizona, California, and Nevada. EPA is taking direct final action without prior proposal because the Agency believes these actions are not controversial. If we receive adverse comments, however, we will publish a timely withdrawal of the direct final rule and address the comments in subsequent action based on this proposed rule. Please note that if we receive adverse comment on an amendment, paragraph, or section of this rule and if that provision may be severed from the remainder of the rule, we may adopt as final those provisions of the rule that are not the subject of an adverse comment.

We do not plan to open a second comment period, so anyone interested in commenting should do so at this time. If we do not receive adverse comments, no further activity is planned. For further information, please see the direct final action.

Authority: This action is issued under the authority of Section 112 of the Clean Air Act, as amended, 42 U.S.C. Section 7412.

Dated: June 8, 2006.

Deborah Jordan,

Director, Air Division, Region IX.

[FR Doc. 06–5842 Filed 6–27–06; 8:45 am]

BILLING CODE 6560–50–P

ENVIRONMENTAL PROTECTION AGENCY

40 CFR Part 180

[EPA–HQ–OPP–2006–0561; FRL–8075–5]

Phosphorous Acid; Proposed Amendment to Exemption From Tolerance

AGENCY: Environmental Protection Agency (EPA).

ACTION: Proposed rule.

SUMMARY: This document proposes to amend the existing tolerance exemption for residues of phosphorous acid and its ammonium, sodium, and potassium salts in or on all food commodities to allow for post-harvest application to stored potatoes at 35,600 ppm or less phosphorous acid.

DATES: Comments must be received on or before July 13, 2006.

ADDRESSES: Submit your comments, identified by docket identification (ID) number EPA–HQ–OPP–2006–0561, by one of the following methods:

- Federal eRulemaking Portal: *http://www.regulations.gov*. Follow the on-line instructions for submitting comments.
- *Mail*: Office of Pesticide Programs (OPP) Regulatory Public Docket (7502P), Environmental Protection Agency, 1200 Pennsylvania Ave., NW., Washington, DC 20460-0001.
- *Delivery*: OPP Regulatory Public Docket (7502P), Environmental Protection Agency, Rm. S-4400, One Potomac Yard (South Building), 2777 S. Crystal Drive, Arlington, VA. Deliveries are only accepted during the Docket's normal hours of operation (8:30 a.m. to 4 p.m., Monday through Friday, excluding legal holidays). Special arrangements should be made for deliveries of boxed information. The Docket telephone number is (703) 305-5805.

Instructions: Direct your comments to docket ID number EPA–HQ–OPP–2006–0561. EPA's policy is that all comments received will be included in the docket without change and may be made available on-line at *http://www.regulations.gov*, including any personal information provided, unless the comment includes information claimed to be Confidential Business Information (CBI) or other information whose disclosure is restricted by statute. Do not submit information that you consider to be CBI or otherwise protected through regulations.gov or e-mail. The Federal regulations.gov website is an ''anonymous access'' system, which means EPA will not know your identity or contact information unless you provide it in the body of your comment. If you send an e-mail comment directly to EPA without going through regulations.gov, your e-mail address will be automatically captured and included as part of the comment that is placed in the docket and made available on the Internet. If you submit an electronic comment, EPA recommends that you include your name and other contact information in the body of your comment and with any disk or CD-ROM you submit. If EPA cannot read your comment due to technical difficulties and cannot contact you for clarification, EPA may not be able to consider your comment. Electronic files should avoid the use of special characters, any form of encryption, and be free of any defects or viruses.

Docket: All documents in the docket are listed in the docket index. Although listed in the index, some information is not publicly available, e.g., CBI or other information whose disclosure is restricted by statute. Certain other material, such as copyrighted material, is not placed on the Internet and will be publicly available only in hard copy form. Publicly available docket materials are available either in the electronic docket at *http://www.regulations.gov*, or, if only available in hard copy, at the OPP Regulatory Public Docket in Rm. S-4400, One Potomac Yard (South Building), 2777 S. Crystal Drive, Arlington, VA. The hours of operation of this Docket Facility are from 8:30 a.m. to 4 p.m., Monday through Friday, excluding legal holidays. The Docket telephone number is (703) 305-5805.

FOR FURTHER INFORMATION CONTACT: Linda Hollis, Biopesticides and Pollution Prevention Division (7511P), Office of Pesticide Programs, Environmental Protection Agency, 1200 Pennsylvania Ave, NW., Washington, DC 20460-0001; telephone number: (703) 308-8733; e-mail address: *hollis.linda@epa.gov*.

SUPPLEMENTARY INFORMATION:

I. General Information

A. Does this Action Apply to Me?

You may be potentially affected by this action if you are an agricultural producer, food manufacturer, or pesticide manufacturer. Potentially affected entities may include, but are not limited to:

- Crop production (NAICS code 111).
- Animal production (NAICS code 112).
- Food manufacturing (NAICS code 311).

• Pesticide manufacturing (NAICS code 32532).

This listing is not intended to be exhaustive, but rather provides a guide for readers regarding entities likely to be affected by this action. Other types of entities not listed in this unit could also be affected. The North American Industrial Classification System (NAICS) codes have been provided to assist you and others in determining whether this action might apply to certain entities. To determine whether you or your business may be affected by this action, you should carefully examine the applicability provisions in the entities listed above. If you have any questions regarding the applicability of this action to a particular entity, consult the person listed under **FOR FURTHER INFORMATION CONTACT**.

B. What Should I Consider as I Prepare My Comments for EPA?

1. *Submitting CBI.* Do not submit this information to EPA through www.regulations.gov or e-mail. Clearly mark the part or all of the information that you claim to be CBI. For CBI information in a disk or CD ROM that you mail to EPA, mark the outside of the disk or CD ROM as CBI and then identify electronically within the disk or CD ROM the specific information that is claimed as CBI). In addition to one complete version of the comment that includes information claimed as CBI, a copy of the comment that does not contain the information claimed as CBI must be submitted for inclusion in the public docket. Information so marked will not be disclosed except in accordance with procedures set forth in 40 CFR part 2.

2. *Tips for preparing your comments.* When submitting comments, remember to:

i. Identify the document by docket ID number and other identifying information (subject heading, **Federal Register** date and page number).

ii. Follow directions. The Agency may ask you to respond to specific questions or organize comments by referencing a Code of Federal Regulations (CFR) part or section number.

iii. Explain why you agree or disagree; suggest alternatives and substitute language for your requested changes.

iv. Describe any assumptions and provide any technical information and/or data that you used.

v. If you estimate potential costs or burdens, explain how you arrived at your estimate in sufficient detail to allow for it to be reproduced.

vi. Provide specific examples to illustrate your concerns and suggest alternatives.

vii. Explain your views as clearly as possible, avoiding the use of profanity or personal threats.

viii. Make sure to submit your comments by the comment period deadline identified.

II. Background and Statutory Findings

Pursuant to section 408(e) of the FFDCA, 21 U.S.C. 346a(e), EPA is proposing, on its own initiative, to amend the existing exemption from the requirement of a tolerance for residues of phosphorous acid and its ammonium, sodium and potassium salts, in or on all food commodities when applied as an agricultural fungicide by adding the post-harvest treatment of stored potatoes.

40 CFR 180.1(i) states, ''unless otherwise specified, tolerances and exemptions established under the regulation in this part apply to residues from only pre harvest application of the chemical.'' As a result, a tolerance exemption must specify post-harvest application where the Agency intends to exempt such applications. The existing tolerance exemption for phosphorous acid (40 CFR 180.1210) does not expressly allow for post-harvest application of this chemical. Therefore, the Agency has, of its own initiative, prepared this proposed amendment to the tolerance exemption for phosphorous acid to allow post-harvest applications of this active ingredient.

As discussed below, in order to determine the exposure and risks resulting from post- harvest treatment of potatoes with phosphorous acid, the Agency conducted a conservative dietary exposure and risk assessment and has concluded that the use of phosphorous acid as a post-harvest treatment on stored potatoes presents no new risks as an agricultural fungicide because the fungicide is applied at very dilute levels, the lack of acute oral toxicity for the tested end use product at >5,000 mg/kg body weight, and the rapid degradation of phosphorous acid. The Agency concludes that the use of phosphorous acid as a post harvest treatment at these application rates meets the FFDCA standard of reasonable certainty of no harm.

Section 408(c)(2)(A)(i) of the FFDCA allows EPA to establish an exemption from the requirement for a tolerance (the legal limit for a pesticide chemical residue in or on a food) only if EPA determines that the exemption is ''safe.'' Section 408(c)(2)(A)(ii) of the FFDCA defines ''safe'' to mean that ''there is a reasonable certainty that no harm will result from aggregate exposure to the pesticide chemical residue, including all anticipated dietary exposures and all other exposures for which there is reliable information.'' This includes exposure through drinking water and in residential settings, but does not include occupational exposure. Pursuant to section 408(c)(2)(B), in establishing or maintaining in effect an exemption from the requirement of a tolerance, EPA must take into account the factors set forth in section 408(b)(2)(C), which require EPA to give special consideration to exposure of infants and children to the pesticide chemical residue in establishing a tolerance and to ''ensure that there is a reasonable certainty that no harm will result to infants and children from aggregate exposure to the pesticide chemical residue....'' Additionally, section 408(b)(2)(D) of the FFDCA requires that the Agency consider ''available information concerning the cumulative effects of a particular pesticide's residues'' and ''other substances that have a common mechanism of toxicity.''

Section 408(c)(1)(B) of the FFDCA allows the EPA to modify a regulation on its own initiative under section 408(e). Section 408(e) requires the EPA to issue a notice of proposed rulemaking and provide a public comment period of not less than 60 days. However, this provision also allows the EPA to shorten the comment period ''if the Administrator for good cause finds that it would be in the public interest to do so and states the reasons for the finding in the notice of proposed rulemaking.'' For this particular rule, EPA has shortened the public comment period to 30 days because the Agency believes that it is in the public interest to do so. Potatoes are an important commodity to the agricultural food supply. Post harvest treatment of potatoes using fungicides will be initiated in late summer. Phosphorous acid provides a safe alternative to other fungicides used on stored potatoes. It is therefore important to expedite this tolerance exemption on order for phosphorous acid to be applied post harvest to potatoes this use season.

EPA performs a number of analyses to determine the risks from aggregate exposure to pesticide residues. For further discussion of the regulatory requirements of section 408 of the FFDCA and a complete description of the risk assessment process, see *http://www.epa.gov/fedrgstr/EPA-PEST/1997/November/Day-26/p30948.htm*.

III. Toxicological Profile

Consistent with section 408(b)(2)(D) of the FFDCA, EPA has reviewed the available scientific data and other relevant information in support of this action and considered its validity,

completeness, and reliability and the relationship of this information to human risk. EPA has also considered available information concerning the variability of the sensitivities of major identifiable subgroups of consumers, including infants and children.

The toxicity profile for phosphorous acid and its ammonium, potassium and sodium salts has already been assessed for its pesticidal use by the Agency and published in support of the tolerance exemption for residues of phosphorous acid in or on all food commodities when used as an agricultural fungicide. See the **Federal Register** of October 5, 2000 (65 FR 59346) (FRL–6599–1). For the purposes of this tolerance exemption amendment, the Agency has relied on the data and/or information previously submitted and has reassessed that data in order to evaluate the request to add post harvest uses to the tolerance exemption. Additionally, the Agency has reviewed publicly available data and information on phosphoric acid, which is chemically and structurally similar to phosphorous acid. The Agency believes that in combination, the data and other information relied upon for this tolerance exemption supports its conclusion that there is reasonable certainty of no harm that will result from the post harvest treatment of potatoes with phosphorous acid when used according to the recommended application rate.

The technical grade of the active ingredient of phosphorous acid has also been fully characterized and assessed by the Agency in the Mineral Acids RED (December 1993) since it is an ingredient which falls within the class of compounds known as the mineral acids. Information on phosphorous acid indicates that it is classified in Toxicity Category III for the oral and dermal routes of exposure, and that it is corrosive to the eyes and skin. The corrosive nature of concentrated or technical grade phosphorous acid is not of a concern because phosphorus acid is applied at very dilute solutions such as 0.25 pounds of phosphorus acid per ton of stored potatoes. Phosphorous acid as applied at such very dilute rates is only slightly irritating to the skin. Further, when applied at such permissible application rate, the residues of the applied phosphorous acid solution have an acute toxicity that is several hundred times lower than the acute toxicity of phosphorous acid in a 100% pure form.

As mentioned above, the Agency, on its own initiative, re-examined the previously reviewed toxicity data on an end use product that contains 35.6% phosphorus acid by weight and would be applied at 0.25 pounds of active ingredient per ton of stored potatoes. The results demonstrated that there is a margin of exposure of nearly 1,000 for children or the equivalent of a 30 kg child consuming 932 pounds of potatoes at one time. This large margin of exposure provides reasonable certainty of no harm at application rates in excess of that for the reviewed end use product. Specifically, an end use product containing 53.8% phosphorous acid by volume (or 35.6% phosphorus acid by weight) was tested on rats at > 5,000 mg/kg bodyweight. The total amount of phosphorous acid that would be consumed for each kg of potatoes based on a 30 kg child was calculated. Based on these calculations the acute oral toxicity was estimated to be equivalvent to 1,780 mg PA/kg bodyweight for a 30 kg child. This is a conservative scenario which assumes that all of the phosphorous acid that is applied to stored potatoes will remain on the crop such that a 30 kg child would need to consume 424 kg of potatoes (to include peel and flesh) in one sitting. The Agency further assumed that there are 2.2lbs/kg of potatoes which would mean that a child would need to consume 932 pounds of potatoes that have been treated post harvest with phosphorous acid in one sitting to achieve the equivalent of a limit dose in laboratory animals. This is a margin of exposure of nearly 1,000-fold.

The toxicological profile of a solution containing 53.8% phosphorous acid is briefly summarized below.

Acute oral (rat) 449404-04. LD_{50}>5,000mg/kg body weight (53.8% phosphorous acid aqueous solution). The test material is classified as a Toxicity Category IV for acute oral toxicity which demonstrates low toxicity. These results also demonstrates that a dilution of the active ingredient significantly decreases the order of toxicity as compared to the TGAI and supports the Agency conclusion that use of the proposed end-use product eliminates the potential of the active ingredient to cause acute toxic effects. There were no adverse effects reported at 5,000 mg/kg.

Acute dermal (rat) 449404-05. LD_{50}>5,000mg/kg body weight (53.8% phosphorous acid aqueous solution). The test material is classified as a Toxicity Category IV for acute dermal toxicity and demonstrates that a dilution of the active ingredient significantly decreases the order of toxicity as compared to the TGAI and supports the Agency conclusion that use of the proposed end-use product will be slightly irritating to the skin.

Acute inhalation (rat) 449404-06. LC_{50}>2.06 mg/L (53.8% phosphorous acid aqueous solution). The test material is classified as a Toxicity Category IV for acute inhalation toxicity and demonstrates that a dilution of the active ingredient to a level that is comparable to concentration of phoshporous acid in the proposed end use product will not cause acute inhalation effects at greater than 2.06 mg/L.

Developmental/reproductive effects, chronic effects and carcinogenicity. There is adequate information available from literature sources to characterize the toxicity of phosphorous acid. Phosphorous acid can affect human health through inhalation of mist, ingestion, and contact with the skin and eyes. In a concentrated form, it will cause corrosive effects (burns or irreversible damage) to the eyes, skin, throat, digestive tract, upper respiratory tract and nose. Signs of overexposure to this chemical are severe burning of eyes and skin, possible nausea and vomiting, coughing, burning and tightness of the chest and shortness of breath. Based on corrosivity and the current use patterns for the mineral acids, EPA did not require these studies as part of the Reregistration Eligibility Decision (RED) on the Mineral Acids (EPA 738-R-029; December 1993).

A typical end use product was tested for acute toxicity. As described above, a 53.8% phosphorous acid product did not cause acute toxicity at >5,000 mg/kg bodyweight. This product would be further diluted when applied to stored potatoes so that something on the order of a quarter of a pound of phosphorous acid would be applied to a ton of stored potatoes. Calculated estimates of the residue from such an application would give a margin of exposure near 1,000 for young children

The Agency concludes therefore that the primary hazards such as corrosivity and irritation that are associated with concentrated phosphorous acid are significantly reduced when used as a post harvest treatment on potatoes at dilute application rates such as those in the typical end use product tested and evaluated by the Agency.

IV. Aggregate Exposures

In examining aggregate exposure, FFDCA section 408 directs EPA to consider available information concerning exposures from the pesticide residue in food and all other non-occupational exposures, including drinking water from ground water or surface water and exposure through pesticide use in gardens, lawns, or

buildings (residential and other indoor uses).

The primary issue for adding post-harvest applications to a tolerance exemption is whether such application causes any new exposure that would not be safe. In order to evaluate that issue, the Agency relied on the existing toxicology data already reviewed on phosphorous acid to conduct a conservative dietary exposure and risk assessment to evaluate any additional risk that might result from post-harvest application of this chemical. In the absence of acute oral studies and any magnitude of residue data, the Agency based it's risk assessment on default assumptions, (i.e. information from the inhalation data base was used to compare to dietary risks, a common approach in the Agency), to ensure that the maximum application rates will not result in unacceptable dietary risks. As a result of this risk assessment, the Agency concludes that the use of phosphorous acid as a post harvest treatment to stored potatoes at the recommended application rate will not add any new exposures or risks and is considered safe.

Phosphorous acid rapidly dissociates to form hydrogen and phosphite ions when applied to growing crops in the environment and therefore, it has already been established that no dietary exposure is expected from pre-harvest applications. The degredates of phosphorous acid, hydrogen and phosphite ions are important nutrients for plants and animals. Formation of these degredates however, may be compromised when phosphorous acid is applied as a post harvest treatment. Since post harvest treatment of phosphorous acid to potatoes is likely to occur in indoor storage facilities, the oxidation process of phosphorous acid will most likely be slowed down. The fact that the phosphorous acid at the time of post harvest treatment has not been oxidized to its degradates is clear and it is unknown how much this oxidation process reduces the potential dietary exposure to phosphorous acid under the conditions of post harvest treatment. However, even with these uncertainties, the Agency believes that when phosphorous acid is used as a post harvest treatment at the recommended application rate, the remaining residues of PA on stored potatoes will not increase toxicity or add any new dietary exposure or risks and the toxicity of phosphorous acid would still be classified in category IV (which is low toxicity) and will be safe.

1. *Dietary exposure*. The Agency has determined that post harvest treatment of phosphorous acid to stored potatoes at the typical application rate evaluated by the Agency may reduce any new anticipated exposure to phosphorous acid. However, even if dietary exposure is not reduced, the Agency believes, based on its reassessment of the data and information, that post harvest application of phosphorous acid to potatoes is safe.

2. *Drinking water exposure*. No significant drinking water exposure is expected to result from phosphorous acid when applied a post harvest treatment to potatoes because phosphorous acid rapidly degrades, is very soluble in water and is applied in storage facilities.

3. *Other non-occupational exposure*. There are no residential, school or day care uses proposed for this product. Since the proposed use pattern is for agricultural food crops and post-harvest treatment on potatoes, the potential for non-occupational, non-dietary exposures to phosphorous acid by the general population, including infants and children, is highly unlikely. Further, even if persons were exposed via the non-occupational route, the Agency believes that the low toxicity from a dilute application such as the one evaluated by the Agency is safe and the primary hazards associated with concentrated phosphorous acid (corrosivity and irritation) will be significantly reduced because the end use products are diluted and the residues following application are very low.

V. Cumulative Effects

Section 408(b)(2)(D)(v) of the FFDCA requires that, when considering whether to establish, modify, or revoke a tolerance, the Agency consider ''available information'' concerning the cumulative effects of a particular pesticide's residues and ''other substances that have a common mechanism of toxicity.'' These considerations include the possible cumulative effects of such residues on infants and children.

BPPD has considered the potential for cumulative effects of phosphorous acid and other substances in relation to a common mechanism of toxicity. Phosphorous Acid may share a common metabolic mechanism with other salts of phosphorous acid (such as calcium); however, due to the low order of toxicity associated with and lack of reported dietary toxicity associated with the use of phosphorous fertilizers on crops, no cumulative effect from the use of phosphorous acid is expected.

VI. Determination of Safety for U.S. Population, Infants and Children

1. *U.S. population*. There is reasonable certainty that no harm will result to the U.S. population, including infants and children, from aggregate exposure to residues of phosphorous acid as a result of preharvest and post-harvest uses, as that toxicity and exposure is expected to be minimal. This includes all anticipated dietary exposures and all other exposures for which there is reliable information. This chemical will be applied as a fungicide to agricultural food crops and as a post-harvest treatment potatoes to stored potatoes at 35,600 ppm or less. There is very little potential for dietary exposure to phosphorous acid, exposure in drinking water, and from non-dietary, non-occupational exposures. Once released into the environment, the chemical rapidly dissociates to form hydrogen and phosphite ions, important nutrients for plants and animals. While the formation of these degredates may be compromised when phosphorous acid is applied as a post harvest treatment, the recommended application rate will significantly reduce any new dietary exposure or risks and is considered to be safe.

Many phosphite salts are generally recognized as safe (GRAS). Therefore, the health risk to humans is negligible based on the low toxicity of these ions and a low application rate and magnitude of dilution for post-harvest use of the active ingredient, and one can conclude that there is a reasonable certainty that no harm will result from aggregate exposure to phosphorous acid.

2. *Infants and children*. FFDCA section 408(b)(2)(C) provides that EPA shall apply an additional tenfold margin of exposure (MOE) for infants and children in the case of threshold effects to account for prenatal and postnatal toxicity and the completeness of the data base on toxicity and exposure, unless EPA determines that a different MOE will be safe for infants and children. Margins of exposure which are often referred to as uncertainty (safety) factors, are incorporated into EPA risk assessments either directly, or through the use of a MOE analysis, or by using uncertainty (safety) factors in calculating a dose level that poses no appreciable risk. In this instance, based on all reliable available information the Agency has reviewed on Phosphorous Acid, the Agency concludes that the additional MOE is not necessary to protect infants and children and that not adding any additional MOE will be safe for infants and children. Aggregate exposure to phosphorous acid is

expected to be minimal. There is very little potential for exposure to phosphorous acid in drinking water and from non-dietary, non-occupational exposures. This chemical will be applied preharvest to agricultural food crops and as a post harvest treatment on potatoes. Once released into the environment, the chemical rapidly dissociates to form hydrogen and phosphite ions. The hydrogen ions affect pH, but this is moderated by natural means. Many phosphite salts are GRAS. Therefore, the health risk to humans is negligible based on the low toxicity of dilute applications of phosphorous acid. One can conclude that there is a reasonable certainty that no harm will result to infants and children from aggregate exposure to phosphorous acid residues.

VII. Other Considerations

Phosphorous acid and its salts are rapidly dissociated in the environment to yield hydrogen and phosphite ions. Release of hydrogen ions will increase the pH of the plant's surface, which will be moderated by the amount of neutralizing ions present, the buffering capacity, and the amount of dilution possible. Phosphite ions are available for uptake by plants usually in the form of ammonium, calcium, and potassium and sodium phosphites (phosphite salts).

A. Endocrine Disruption

EPA is required under section 408(p) of the FFDCA, as amended by FQPA, to develop a screening program to determine whether certain substances (including all pesticide active and other ingredients) ''may have an effect in humans that is similar to an effect produced by a naturally-occurring estrogen, or other such endocrine effects as the Administrator may designate.'' Following the recommendations of its Endocrine Disruptor Screening and Testing Advisory Committee (EDSTAC), EPA determined that there was scientific basis for including, as part of the program, the androgen- and thyroid hormone systems, in addition to the estrogen hormone system. EPA also adopted EDSTAC's recommendation that the program include evaluations of potential effects in wildlife. For pesticide chemicals, EPA will use FIFRA and, to the extent that effects in wildlife may help determine whether a substance may have an effect in humans, FFDCA authority to require the wildlife evaluations. As the science develops and resources allow, screening of additional hormone systems may be added to the Endocrine Disruptor Screening Program (EDSP).

At this time, the Agency is not requiring information on the endocrine effects of this active ingredient, phosphorous acid. Based on the weight of the evidence of available data and the absence of any reports to the Agency of sensitivity or other adverse effects, no endocrine system related effects are identified for phosphorous acid and none is expected because of its use. To date there is no evidence that phosphorous acid affects the immune system, functions in a manner similar to any known hormone, or that it acts as an endocrine disruptor. Thus, there is no impact via endocrine-related effects on the Agency's safety finding set forth in this proposed rule amending the phosphorous acid exemption from the requirement of a tolerance.

B. Analytical Method

Through this action, the Agency proposes to amend the existing exemption from the requirement of a tolerance for phosphorous acid to include post harvest treatment on potatoes for the reasons stated above which include low toxicity to mammals and negligible exposure from the pesticidal use of products containing phosphorous acid. For the same reasons, the Agency concludes that an analytical method is not required for enforcement purposes for phosphorous acid.

C. Codex Maximum Residue Level

No maximum residue levels (MRLs) have been established for phosphorous acid by the Codex Alimentarius Commission (CODEX).

VIII. Conclusions

The Agency concludes that if products containing phosphorous acid as an active ingredient are used in accordance with label directions, there is a reasonable certainty that no harm to the U.S. population, including infants and children, will result from aggregate exposure to residues of phosphorous acid, when used as an agricultural fungicide on all food commodities or when used as a post-harvest treatment on potatoes.

IX. Statutory and Executive Order Reviews

This proposed rule amends an exemption from the requirement of a tolerance under section 408(e) of the FFDCA in response to a petition submitted to the Agency. The Office of Management and Budget (OMB) has exempted these types of actions from review under Executive Order 12866, entitled *Regulatory Planning and Review* (58 FR 51735, October 4, 1993). Because this proposed rule has been exempted from review under Executive Order 12866 due to its lack of significance, this proposed rule is not subject to Executive Order 13211, *Actions Concerning Regulations That Significantly Affect Energy Supply, Distribution, or Use* (66 FR 28355, May 22, 2001). This proposed rule does not contain any information collections subject to OMB approval under the Paperwork Reduction Act (PRA), 44 U.S.C. 3501 *et seq.*, or impose any enforceable duty or contain any unfunded mandate as described under Title II of the Unfunded Mandates Reform Act of 1995 (UMRA) (Pub. Law 104-4). Nor does it require any special considerations under Executive Order 12898, entitled *Federal Actions to Address Environmental Justice in Minority Populations and Low-Income Populations* (59 FR 7629, February 16, 1994); or OMB review or any Agency action under Executive Order 13045, entitled *Protection of Children from Environmental Health Risks and Safety Risks* (62 FR 19885, April 23, 1997). This action does not involve any technical standards that would require Agency consideration of voluntary consensus standards pursuant to section 12(d) of the National Technology Transfer and Advancement Act of 1995 (NTTAA), Public Law 104-113, section 12(d) (15 U.S.C. 272 note). Since this Agency initiated amendment to an exemption from tolerance requirement, issued section 408(e) of the FFDCA, requires the issuance of a proposed rule, the requirements of the Regulatory Flexibility Act (RFA) (5 U.S.C. 601 et seq.) apply. The Agency hereby certifies that this proposed action will not have significant negative economic impact on a substantial number of small entities. In addition, the Agency has determined that this action will not have a substantial direct effect on States, on the relationship between the national government and the States, or on the distribution of power and responsibilities among the various levels of government, as specified in Executive Order 13132, entitled *Federalism* (64 FR 43255, August 10, 1999). Executive Order 13132 requires EPA to develop an accountable process to ensure ''meaningful and timely input by State and local officials in the development of regulatory policies that have federalism implications.'' ''Policies that have federalism implications'' is defined in the Executive order to include regulations that have ''substantial direct effects on the States, on the relationship between the national government and the States, or on the distribution of power and

responsibilities among the various levels of government.'' This proposed rule directly regulates growers, food processors, food handlers and food retailers, not States. This action does not alter the relationships or distribution of power and responsibilities established by Congress in the preemption provisions of section 408(n)(4) of the FFDCA. For these same reasons, the Agency has determined that this proposed rule does not have any ''tribal implications'' as described in Executive Order 13175, entitled *Consultation and Coordination with Indian Tribal Governments* (65 FR 67249, November 6, 2000). Executive Order 13175, requires EPA to develop an accountable process to ensure ''meaningful and timely input by tribal officials in the development of regulatory policies that have tribal implications.'' ''Policies that have tribal implications'' is defined in the Executive order to include regulations that have ''substantial direct effects on one or more Indian tribes, on the relationship between the Federal Government and the Indian tribes, or on the distribution of power and responsibilities between the Federal Government and Indian tribes.'' This proposed rule will not have substantial direct effects on tribal governments, on the relationship between the Federal Government and Indian tribes, or on the distribution of power and responsibilities between the Federal Government and Indian tribes, as specified in Executive Order 13175. Thus, Executive Order 13175 does not apply to this proposed rule.

List of Subjects in 40 CFR Part 180

Environmental protection, Administrative practice and procedure, Agricultural commodities, Pesticides and pests, Reporting and recordkeeping requirements.

Dated: June 20, 2006.

Janet L. Andersen,

Director, Biopesticides and Pollution Prevention Division, Office of Pesticide Programs.

Therefore, it is proposed that 40 CFR chapter I be amended as follows:

PART 180—[AMENDED]

1. The authority citation for part 180 continues to read as follows:

Authority: 21 U.S.C. 321(q), 346a and 371.

2. Section 180.1210 is revised to read as follows:

§ 180.1210 Phosphorous acid; exemption from the requirement of a tolerance .

An exemption from the requirement of a tolerance is established for residues of phosphorous acid and its ammonium, sodium, and potassium salts in or on all food commodities when used as an agricultural fungicide and in or on potatoes when applied as a post-harvest treatment at 35,600 ppm or less phosphorous acid.

[FR Doc. E6–10031 Filed 6–27–06; 8:45 am]

BILLING CODE 6560–50–S

ENVIRONMENTAL PROTECTION AGENCY

40 CFR Part 300

[EPA–HQ–SFUND–1990–0011; FRL–8188–9]

National Oil and Hazardous Substances Pollution Contingency Plan; National Priorities List

AGENCY: Environmental Protection Agency (EPA).

ACTION: Notice of intent for partial deletion of the Ellsworth Air Force Base Site from the National Priorities List.

SUMMARY: The Environmental Protection Agency, Region 8 (EPA) announces its intent to delete portions of the Ellsworth Air Force Base (AFB) Site located in Meade and Pennington Counties, South Dakota, from the National Priorities List (NPL) and requests public comment on this action. The NPL constitutes Appendix B to the National Oil and Hazardous Substances Pollution Contingency Plan (NCP), 40 CFR Part 300, which EPA promulgated pursuant to Section 105 of the Comprehensive Environmental Response, Compensation, and Liability Act (CERCLA).

The EPA has determined, with the concurrence of the State of South Dakota through the Department of Environment and Natural Resources (SDDENR) that for the parcels proposed for deletion, all appropriate actions under CERCLA have been implemented to protect human health, welfare and the environment and no further response action by responsible parties is appropriate. This partial deletion pertains to surface soil, unsaturated subsurface soil, surface water, and sediments at Operable Units 2, 3, 4, 5, 6, 7, 8, 9, 10 and 12, and excludes the ground water medium at these parcels. The ground water medium at the Ellsworth AFB Site (OU–11, Basewide Ground Water), and the soil medium (surface and unsaturated subsurface soils) at OU–1, Fire Protection Training Area, will remain on the NPL and response activities will continue for those OUs. Two additional areas not associated with an operable unit, the Gateway Lake Ash Study Area and the Pride Hangar Study Area, are currently under investigation and are also not part of this partial deletion.

DATES: Comments concerning this proposed partial deletion may be submitted on or before July 28, 2006.

ADDRESSES: Submit your comments, identified by Docket ID No. EPA–HQ–SFUND–1990–0011, by one of the following methods:

- *http://www.regulations.gov:* Follow the on-line instructions for submitting comments.
- *E-mail: dalton.john@epamail.epa.gov.*
- *Fax:* 303–312–6961.
- *Mail:* Mr. John Dalton, Community Involvement Coordinator (8OC), U.S. EPA, Region 8, 999 18th Street, Suite 300, Denver, CO 80202–2466.
- *Hand Delivery:* 999 18th Street, Suite 300, Denver, CO 80202–2466.

Instructions: Direct your comments to Docket ID No. EPA–HQ–SFUND–1990–0011. EPA's policy is that all comments received will be included in the public docket without change and may be made available online at *http://www.regulations.gov,* including any personal information provided, unless the comment includes information claimed to be Confidential Business Information (CBI) or other information whose disclosure is restricted by statute. Do not submit information that you consider to be CBI or otherwise protected through *http://www.regulations.gov* or e-mail. The *http://www.regulations.gov* Web site is an ''anonymous access'' system, which means EPA will not know your identity or contact information unless you provide it in the body of your comment. If you send an e-mail comment directly to EPA without going through *http://www.regulations.gov,* your e-mail address will be automatically captured and included as part of the comment that is placed in the public docket and made available on the Internet. If you submit an electronic comment, EPA recommends that you include your name and other contact information in the body of your comment and with any disk or CD–ROM you submit. If EPA cannot read your comment due to technical difficulties and cannot contact you for clarification, EPA may not be able to consider your comment. Electronic files should avoid the use of special characters, any form of encryption, and be free of any defects or viruses.

Docket: All documents in the docket are listed in the *http://www.regulations.gov* index. Although listed in the index, some information is not publicly available, *e.g.*, CBI or other

information whose disclosure is restricted by statute. Certain other material, such as copyrighted material, will be publicly available only in hard copy. Publicly available docket materials are available either electronically in *http://www.regulations.gov* or in hard copy at the EAFB Information Repository located at the Rapid City Public Library and at the Ellsworth AFB Holbrook Library. The Rapid City Library is located at 610 Quincy Street, Rapid City, SD 57701. For hours of operation, call (605) 394–4171. Holbrook Library is located at 2650 Doolittle Dr. Ellsworth AFB, SD 57706, between the Base commissary and the Base Theater. For hours of operation, call (605) 385–1686.

All CERCLA and Environmental Restoration Program (ERP) documents, including those not kept at the Information Repositories, and the Docket for this proposed partial deletion are kept in the Administrative Record. The Administrative Record is available for public viewing at the Base Environmental Management Flight, 2103 Scott Drive, Ellsworth AFB, SD 57706. To schedule an appointment or for Base access call (605) 385–2680.

FOR FURTHER INFORMATION CONTACT: Mr. John Dalton, Community Involvement Coordinator (8OC), U.S. EPA, Region 8, 999 18th Street, Suite 300, Denver, CO 80202–2466, Phone: (303) 312–6633.

Table of Contents

I. Introduction
II. NPL Deletion Criteria
III. Deletion Procedures
IV. Basis for Intended Partial Site Deletion
V. Deletion Action

I. Introduction

The EPA announces its intent to delete portions of the Ellsworth AFB Site (CERCLIS ID #SD2571924644), from the NPL and requests comments on this proposed action. The NPL constitutes Appendix B to the NCP, 40 CFR part 300, which EPA promulgated pursuant to Section 105 of CERCLA as amended, 42 U.S.C. 9605. The NPL is a list of facilities which EPA determined may pose a significant threat to public health, welfare, or the environment. 40 CFR 300.425(e) authorizes deletion of facilities, or portions of facilities, from the NPL provided that facility meets certain criteria. Deletion from the NPL does not necessarily preclude further remedial action. If a significant release occurs at a facility deleted from the NPL, that facility is restored to the NPL without application of the Hazard Ranking System. Federal facilities are not eligible for Superfund-financed remedial action. However, all Federal facilities, whether listed on the NPL or not, have a continuing statutory duty to conduct further remediation, if required, even after the Federal property is transferred to non-Federal owners. When a release attributable to a Federal facility's historical activities is discovered after a property transfer, CERCLA section 120(b)(3)(A)(i) requires the federal entity to conduct further remediation if necessary for the protection of human health and the environment.

An environmental assessment was conducted at Ellsworth AFB on the parcels proposed for deletion. All media were sampled. Results of the sampling were reported in Remedial Investigation (RI) reports which were used to conduct Risk Assessments. Feasibility Studies (FS) were generated which evaluated potential remedies required to address the contamination. The remedies were summarized in a public notice soliciting comments on the remedies. All public comments received during the public comment periods were considered by the Air Force and EPA before the final remedy was selected.

The parcels proposed for deletion are described in more detail later in this document. EPA proposes deleting these parcels from the NPL because no further CERCLA response is appropriate. The remaining portions of the property comprising the Ellsworth AFB Site will remain on the NPL. This notice will be published in the **Federal Register** to solicit public comments on the proposed partial deletion. The public comment period is thirty (30) days beginning on the date of publication.

Section II of this action explains the criteria for the partial deletion of sites from the NPL. Section III discusses the procedures that EPA is using for this action. Section IV discusses the history of the Ellsworth AFB Site and explains how the portions of the Site proposed for deletion meet deletion criteria. Section V states EPA's intention to delete the portions of the Site from the NPL unless dissenting comments are received during the comment period.

II. NPL Deletion Criteria

The NCP establishes the criteria that are used to delete sites from the NPL. In accordance with 40 CFR 300.425(e), sites may be deleted from the NPL where no further response is appropriate to protect human health or the environment. In making such a determination pursuant to 40 CFR 300.425(e), EPA will consider, in consultation with the State, whether any of the following have been met:

(1) Section 300.425(e)(1)(i). Responsible parties or other persons have implemented all appropriate response actions required; or

(2) Section 300.425(e)(1)(ii). All appropriate Fund-financed response under CERCLA has been implemented, and no further response action by responsible parties is appropriate; or

(3) Section 300.425(e)(1)(iii). The remedial investigation has shown that the release poses no significant threat to human health or the environment and, therefore, taking of remedial measures is not appropriate.

As explained below, portions of the Ellsworth AFB Site meet the NCP's deletion criteria listed above. Therefore, partial deletion is being proposed.

III. Deletion Procedures

Upon determination that at least one of the criteria described in 40 CFR 300.425(e) of the NCP has been met, EPA may formally begin deletion procedures. The following procedures were used for the proposed partial deletion of portions of Ellsworth AFB:

(1) All appropriate responses under CERCLA have been implemented and no further action is appropriate for the identified areas;

(2) The State of South Dakota through the Department of Environment and Natural Resources concurred with this proposed partial deletion decision via a letter dated February 10, 2006;

(3) Concurrent with this Notice of Intent for Partial Deletion, notice has been published in the Rapid City Journal (the newspaper of record) and has been distributed to appropriate Federal, State, and local officials, and other interested parties. These notices announce a thirty (30) day public comment period on the deletion package, which commences on the date of publication of this notice in the **Federal Register** and the Rapid City Journal; and

(4) All relevant documents have been made available for public review at the local information repositories listed previously.

Upon completion of the 30-day comment period, EPA will evaluate all comments received before issuing the final decision on partial deletion. If appropriate, EPA will prepare and issue a Responsiveness Summary for comments received during the public comment period and will address concerns presented in the comments. The Responsiveness Summary will be made available to the public at the information repositories. Members of the public are encouraged to contact EPA to obtain a copy of the Responsiveness Summary. If, after review of all public comments, EPA determines that the partial deletion from

the NPL is appropriate, EPA will publish a Final Notice of Partial Deletion in the **Federal Register.** As stated in 40 CFR 300.425, a site, or portion of a site, deleted from the NPL, remains eligible for future response actions if conditions warrant.

IV. Basis for Intended Partial Site Deletion

The following site summary provides EPA's rationale for the proposed partial deletion. It also includes information demonstrating satisfaction of the deletion criteria specified under 40 CFR 300.425(e).

Background

Ellsworth AFB is a U.S. Air Force Air Combat Command (ACC) installation located 12 miles east of Rapid City, South Dakota, and adjacent to the small community of Box Elder. The main Air Base covers approximately 4,858 acres within Meade and Pennington counties and includes runways, airfield operations, industrial areas, housing, and recreational facilities. The site was officially activated in July 1942 as the Rapid City Army Air Base, a training facility for B–17 bomber crews. Ellsworth AFB has been the headquarters of operations for a variety of aircraft, the Titan I Intercontinental Ballistic Missile system and the Minuteman I and Minuteman II Missile systems. The Base has historically provided support, fueling, training, maintenance, and/or testing facilities. Operations at Ellsworth AFB over the years generated a variety of waste materials including municipal solid waste, wastewater treatment plant sludge, industrial wastes including waste oils, solvents, paints, spilled fuels, waste pesticides, shop waste, metal remains from ordnance disposal (shell casings and bomb fragments but not unexploded ordnance) and radiological wastes. Contaminants of concern at Ellsworth AFB include chlorinated solvents, waste fuels and metals.

Ellsworth AFB is located within the following Sections, Townships, and Ranges, in Pennington and Meade Counties, South Dakota:

Sections 35 and 36, Township 3 North, Range 8 East, Meade County;

Section 31, Township 3 North, Range 9 East, Meade County;

Sections 1, 2, 11, 12, 13, Township 2 North, Range 8 East, Pennington and Meade Counties; and

Sections 5, 6, 7, 8, 17, 18, 19, Township 2 North, Range 9 East, Pennington and Meade Counties.

Ellsworth AFB was placed on the NPL August 30, 1990 (55 FR 35509) and is therefore subject to the provisions of Section 120 of CERCLA, 42 U.S.C. 9620. At that time the entire base, approximately 4,858 acres, was included in the listing (''fence line to fence line''). The Department of Defense, EPA and the State of South Dakota entered into a Federal Facilities Agreement (FFA) which formalizes the process for environmental response actions and the relative roles of the Air Force, the EPA and the State of South Dakota under CERCLA and the Installation Restoration Program (IRP). The FFA was signed by the Air Force, the EPA, and the State of South Dakota in January, 1992 and became effective on April 1, 1992.

Upon listing, the facility began identifying sites where activities involving hazardous substances may have occurred. The sites requiring further investigations were grouped into Operable Units (OUs). Twelve OUs have been identified at Ellsworth AFB. The OUs include: OU–1, Fire Protection Training Area; OU–2, Landfills Nos. 1 and 6; OU–3, Landfill No. 2; OU–4, Landfill No. 3; OU–5, Landfill No. 4; OU–6, Landfill No. 5; OU–7, Weapons Storage Area; OU–8, Explosive Ordnance Disposal Area; OU–9, Old Auto Hobby Shop Area; OU–10, North Hangar Complex; OU–11, Basewide Ground Water; and OU–12, Hardfill No. 1. Records of Decision (RODs) have been finalized for all of these OUs. Appropriate response actions for soil media have been completed per ROD decisions at the 10 OUs proposed for deletion. The RI/FS process did not identify any unacceptable risks for surface water and sediment at these OUs. Therefore, remedial actions were not required for surface water and sediment. Remedial activities for areas where there has been a release or disposal of petroleum products have been deferred to action under the SDDENR petroleum release program.

The portions of the Ellsworth AFB Site to be deleted from the NPL include surface soil, unsaturated subsurface soil, surface water and sediment media at OU–2, OU–3, OU–4, OU–5, OU–6, OU–7, OU–8, OU–9, OU–10 and OU–12 (approximately 542 acres) and the surface soil, unsaturated subsurface soil, surface water and sediment media of an additional 4,300 acres which are not associated with an operable unit and are not identified as posing a risk to human health or the environment.

Of the approximately 4,858 acres originally included in the Ellsworth AFB site NPL listing in 1990, there are four areas that are *not* being deleted. These areas are:

- OU–1 (all media) [generally described by the following coordinates: N667749.88/E1242611.11; N667496.84/E1242812.29; N667330.75/E1242852.01; N666933.49/E1242558.40; N667158.53/E1242265.75; N667787.47/E1242276.80; N667749.88/E1242611.11]
- OU–11 (Basewide Ground Water) [including all ground water plumes located within the Base boundary (described earlier) and those described as emanating from the Base]
- Gateway Lake Ash Study Area [generally described by the following coordinates: N667944.01/E1248056.74; N667694.15/E1248058.87; N667695.57/E1247811.84; N667947.55/E1247834.49; N667944.01/E1248056.74]
- Pride Hanger Study Area [generally described by the following coordinates: N673538.32/E1243066.96; N673267.45/E1243270.27; N673228.21/E1243223.95; N673113.04/E1243308.87; N673021.04/E1243204.65; N673409.00/E1242911.91; N673538.32/E1243066.96]

Maps identifying all areas are available for review in the partial deletion docket.

Operable Unit 2

The OU–2 study area consists of Landfill No. 1, Landfill No. 6, the drainage channel in the western portion of Landfill No. 1, and the drainage channel near Landfill No. 6, which includes Pond 002.

Landfill No. 1 is approximately 21.5 acres in size and is located at the southern boundary of Ellsworth AFB. The landfill was active from the early 1940s to 1964 and was used to dispose of a variety of wastes including Base refuse, incinerator ash, sludge, oil, and possibly liquid industrial wastes. Hardfill debris was also disposed of at Landfill No. 1.

Landfill No. 6 is approximately 0.5 acres in size and is located northeast of Landfill No. 1 on the north side of Kenney Road. Landfill No. 6 was used from 1962 to 1965 and primarily received general Base refuse. Waste oil, fuel, and solvents may also have been disposed of at this location. However, no direct physical evidence of these chemicals was found at Landfill No. 6 during the 1993/1994 remedial investigation field activities.

Within OU–2, soils contained chlorinated volatile organic compounds (VOCs), benzene, toluene, ethyl benzene, xylenes (BTEX), pesticides, inorganic compounds, and polynuclear aromatic hydrocarbons (PAHs). The concentrations of several inorganic compounds exceed background concentrations. This is believed to be a combination of landfill activities and variations in the concentrations of

naturally-occurring compounds in the soil. Jet fuel contamination caused by a leak in a fuel line was identified along the southern boundary of OU–2. This jet fuel contamination has been remediated under the SDDENR petroleum release program. Sediment samples collected at OU–2 contained semi-volatile organic compounds (SVOCs), primarily PAHs, pesticides and inorganic compounds. Low concentrations of three SVOCs were detected in surface water samples at OU–2, as well as numerous inorganic compounds. The concentrations of several inorganic compounds exceeded State and Federal water quality standards. However, the results of the risk assessment indicated that risk due to exposure to contaminants in sediments at OU–2 was within the acceptable risk range, and that surface water was not a media of current concern. Therefore, it was determined that remedial action was not warranted for surface water or sediment.

Two removal actions were completed at this OU. A site in the southwest corner of Landfill 1 identified during RI geophysical investigations was excavated in 1997. This location contained low-level radioactive waste material. A second removal action was completed for remnants of chemical weapons training materials located in the same general area. The identified materials were excavated and moved off Site for disposal at a licensed waste disposal facility.

The ROD was signed in May of 1996. The selected alternative for Landfill No. 1 was a vegetated soil cover and institutional controls. This alternative includes institutional controls, storm-water channel realignment and lining, in conjunction with physical modification of the OU to reduce potential risk. The selected alternative for Landfill No. 6 was institutional controls. This alternative uses access restriction, monitoring, and other controls to reduce potential risk. Construction for the storm-water channel was completed in October 1996. The landfill cover was completed in May 1997. Ground water remediation and monitoring are part of OU–11.

Operable Unit 3

OU–3, located in the northeast portion of Ellsworth AFB, consists of Landfill 2, (approximately one acre), the four identified trenches to the north and two disturbed soil areas in the southeast and southwest corners. The landfill was active for approximately one year (1964–1965). Combustible trash, described as shop wastes, was burned daily in a burn pit. Four trenches located north of the fill area were used for the disposal of metal and industrial and household refuse. A sign located within the boundary of OU–3 indicates a missile disposal/burial site. The missile disposal site contains scrap metal salvaged from a test flight. Contaminants identified in soil at this OU include, VOCs, jet fuel, numerous SVOCs, pesticides and inorganic compounds. The concentrations of several inorganic compounds exceed background concentrations.

The ROD was signed in June of 1996. The selected remedial action was a vegetated soil cover. This alternative includes institutional controls in conjunction with physical modification of the OU to reduce potential risk. The landfill cover was completed in May 1997. Ground water monitoring is part of OU–11.

Operable Unit 4

OU–4 (Landfill No. 3) is approximately 40 acres in size and is located in the southwestern corner of Ellsworth AFB. The landfill was active between 1965 and 1976 as a trench and fill operation. The landfill was also used for disposal of construction demolition debris during the mid-1980s, digested wastewater treatment plant biomass, shop wastes (liquids and paints), industrial sewer sludge and oils, soil containing Pramitol and sodium chromate, and miscellaneous refuse. The contents of approximately 100 55-gallon drums containing waste oil and fuel were placed in a waste-oil pit on site. OU–4 was also used as a staging area for 55-gallon drums containing waste oil and fuel. In addition, the southwest corner of OU–4 was used to stage asphalt rubble. Contaminants in soil at the OU include VOCs, PAHs, jet fuel, pesticides, polychlorinated biphenyls (PCBs), inorganic compounds, dioxins and furans. The concentrations of several inorganic compounds exceed background concentrations. Contaminants in sediment include acetone, PAHs, pesticides, and inorganic compounds. However, it was determined in the risk assessment that those levels of contaminants fell within the acceptable risk range and therefore, no remedial action was warranted for sediment.

The ROD was signed in May of 1996. The selected remedial action was a vegetated soil cover for the landfill, and extraction and treatment for ground water. This alternative includes institutional controls in conjunction with physical modification of the OU to reduce potential risk. The landfill cover was completed in December 1996. Ground water remediation and monitoring are part of OU–11.

Operable Unit 5

OU–5 (Landfill No. 4) is a 10-acre site located adjacent to the north perimeter of Ellsworth AFB. From the 1940s through 1990, the landfill was used primarily for the disposal of construction demolition and hardfill materials, general refuse and drums. Contaminants in soil at OU–5 include PAHs, pesticides, inorganic compounds, and jet fuel. The concentrations of several inorganic compounds exceed background concentrations. One surface water and one sediment sample were collected at OU–5 from an ephemeral surface water source. These samples contained VOCs, SVOCs, and inorganic compounds. However, it was determined in the risk assessment that those levels of contaminants fell within the acceptable risk range and therefore, no remedial action was warranted for surface water or sediment.

The ROD was signed in June of 1996. The selected remedial action was a vegetated soil cover. This alternative includes institutional controls in conjunction with physical modification of the OU to reduce potential risk. The landfill cover was completed in May 1997. Ground water monitoring is part of OU–11.

Operable Unit 6

OU–6 (Landfill No. 5) is a 7-acre site located in the southeastern corner of Ellsworth AFB. From 1960 to 1980, demolition debris and hardfill materials were placed in the landfill along with miscellaneous refuse, dried sewage sludge, and possibly shop wastes. Construction and demolition debris was initially placed along the rail line to stabilize erosion, and was later expanded to the east. OU–6 was used for stockpiling wastewater treatment plant sludge. Contaminants in soil at OU–6 include PAHs, pesticides, and inorganic compounds. The concentrations of several inorganic compounds exceed background concentrations. Contaminants in surface water and sediment include VOCs, SVOCs, pesticides and inorganic compounds. However, it was determined in the risk assessment that those levels of contaminants fell within the acceptable risk range and therefore, no remedial action was warranted for surface water or sediment.

The ROD was signed in October of 1995. The selected remedial action was a vegetated soil cover, and long-term surface water and sediment sampling. This alternative includes institutional controls in conjunction with physical modification of the OU to reduce potential risk. The landfill cover was

completed in July 1996. Ground water monitoring is part of OU–11.

Operable Unit 7

OU–7 (Low-Level Radioactive Waste Burial Site) is located in the Munitions Storage Area (MSA), formerly identified as the Weapons Storage Area (WSA), at the northernmost end of Ellsworth AFB. The MSA covers approximately 65 acres. Radioactive wastes were generated at Ellsworth AFB between 1952 and 1962. During that time the WSA was under the control of the Atomic Energy Commission (AEC). After 1962, control of the WSA was transferred to the Air Force. Contaminants in soil at OU–7 include VOCs and inorganic compounds. Contaminants in surface water and sediment include VOCs and inorganic compounds. The concentrations of several inorganic compounds in soil and sediment exceed background concentrations. Radionuclides detected in all media were within the normal background range due to natural variations in soil types and geological characteristics. The results of the risk assessment indicated that risk due to exposure to contaminants in surface water and sediments at OU–7 was within the acceptable risk range. Therefore, it was determined that remedial action was not warranted for surface water or sediment.

The ROD was signed in June of 1996. The selected remedial action was application of institutional controls for soil and ground water, completion of detailed records searches and long term ground water monitoring. Ground water monitoring is part of OU–11.

Operable Unit 8

OU–8 (Explosive Ordnance Disposal Area) is located in the northeastern portion of Ellsworth AFB. OU–8 consists of two distinct areas, the Explosive Ordnance Disposal (EOD) Area and the Debris Burial Area. The EOD Area is approximately 600 feet by 1,350 feet, and the Debris Burial Area is approximately 300 feet by 150 feet. The EOD Area includes: A Pramitol (an herbicide) spill area, a burn pit area, a burn furnace area, and a detonation site. This detonation area was formerly used for the detonation of active explosives. The Debris Burial Area was used for the burial of debris generated from detonation of explosives at the demolition area. Contamination in soil at this OU includes VOCs, SVOCs (primarily PAHs), jet fuel, pesticides, dioxins/furans, and inorganic compounds. The concentrations of several inorganic compounds in soil and sediment exceed background concentrations. One pesticide was detected in sediment samples. However, it was determined in the risk assessment that those levels of contaminants fell within the acceptable risk range and therefore, no remedial action was warranted for sediment.

The ROD was signed in June of 1996. The selected remedial action was installation of vegetated soil covers, application of institutional controls and long term sediment sampling. The soil covers over the EOD Area and the Debris Burial Area were completed in June 1997. Ground water monitoring is part of OU–11.

Operable Unit 9

OU–9 encompasses 90 acres surrounding the Old Auto Hobby Shop. The types of potential contaminant source areas at OU–9 include: Building Operations, underground storage tanks, the former Quartermaster Gasoline Dispensing Area, the former fuel transfer line, industrial waste lines, jet engine test facilities and upgradient source areas. There is no known documentation of major spills or releases at OU–9. Small volumes of fuels, oils, and solvents may have been released to the environment over time through incidental spills, leaks, and/or poor waste handling and disposal practices. Contaminants in soil at this OU include VOCs (primarily BTEX), SVOCs (primarily PAHs), jet fuel, and inorganic compounds. Several inorganic compounds were detected in surface water and sediment samples. PAHs were also reported in sediment samples.

It was determined that OU–9 did not pose a threat to human health or the environment. In May 1996, a ROD was signed for no further action. Remediation of soils contaminated by petroleum will be performed under the SDDENR petroleum release program. Ground water remediation was deferred to OU–11.

Operable Unit 10

OU–10 is the North Hangar Complex, a 75-acre site located in the central portion of Ellsworth AFB, northeast of the primary instrument runway. The North Hangar complex was constructed in the 1950s and is composed of five rows of aircraft repair and maintenance hangars. Most of OU–10 is paved with concrete with some grassy areas between the hanger rows. OU–10 contains a system of underground jet fuel hydrant lines that deliver fuel to docked aircraft, and underground industrial waste lines associated with aircraft maintenance. It was reported that waste products used for aircraft maintenance may have been washed down floor drains in the maintenance buildings. Contaminants at this OU included VOCs, SVOCs and jet fuel. The predominant VOCs were BTEX compounds.

It was determined that OU–10 did not pose a threat to human health or the environment. In May 1996, a ROD was signed for no further action. Remediation of soils contaminated by petroleum will be performed under the SDDENR petroleum release program. Ground water remediation was deferred to OU–11.

Operable Unit 12

OU–12 (Hardfill No. 1) is located in the southern half of Ellsworth AFB and is approximately 14 acres in size. OU–12 was identified as a hardfill, rather than a landfill, because disposal records indicated that it only received construction debris such as wood, metal, concrete, and asphalt. The remedial investigation identified the presence of VOCs, SVOCs, jet fuel and pesticides, but through site characterization it was found that these contaminants were related to flightline runoff rather than landfill disposal practices.

The ROD was signed in May of 1996. The selected remedial action was a vegetated soil cover. This alternative includes institutional controls in conjunction with physical modification of the OU to reduce potential risk. The soil cover was completed in May 1997. Ground water monitoring is part of OU–11.

Five-Year Review

The initial five-year review for Ellsworth AFB base was completed in September 2000. The second five-year review was completed in September 2005. The reviews focused on the final remedial activities at each OU. Discussions and recommendations were included for the long-term ground water actions at the OUs and for Operation and Maintenance issues with landfill covers.

V. Deletion Action

EPA, with the State of South Dakota's concurrence, has determined that no additional response is necessary at Ellsworth AFB for surface soil, unsaturated subsurface soil, surface water and sediment media at OU–2, OU–3, OU–4, OU–5, OU–6, OU–7, OU–8, OU–9, OU–10 and OU–12 (approximately 542 acres) and the surface soil, unsaturated subsurface soil, surface water and sediment media of an additional 4,300 acres which are not associated with an operable unit and are

not identified as posing a risk to human health or the environment.

No further CERCLA response is appropriate or necessary to provide protection of human health and the environment other than the ongoing inspection, maintenance and monitoring activities. Therefore EPA is deleting these portions of the Ellsworth AFB Site. OU–1, OU–11, the Pride Hanger Study Area and the Gateway Lake Ash Study Area will remain on the NPL.

Dated: June 8, 2006.

Kerrigan G. Clough,

Acting Regional Administrator, U.S. Environmental Protection Agency, Region 8.

[FR Doc. E6–10105 Filed 6–27–06; 8:45 am]

BILLING CODE 6560–50–P

FEDERAL COMMUNICATIONS COMMISSION

47 CFR Part 73

[DA 06–1227; MB Docket No. 06–88; RM–11254]

Radio Broadcasting Services; Boonville and Wheatland, MO

AGENCY: Federal Communications Commission.

ACTION: Proposed rule.

SUMMARY: The Audio Division requests comment on a petition filed by Bittersweet Broadcasting, Inc. to upgrade its Station KWJK–FM, Boonville, Missouri, from Channel 226A to Channel 226C3. *See* **SUPPLEMENTARY INFORMATION**.

DATES: Comments must be filed on or before July 31, 2006, and reply comments on or before August 15, 2006.

ADDRESSES: Federal Communications Commission, 445 Twelfth Street, SW., Washington, DC 20554. In addition to filing comments with the FCC, interested parties should serve the petitioner, as follows: Bittersweet Broadcasting, Inc., 1600 Radio Hill Road, Boonville, Missouri 65233 (Petitioner); and Frederick A. Polner, Esq., Rothman, Gordon Foreman & Groudine, P.C., Third Floor, Grant Building, Pittsburgh, PA 15219–2203 (Counsel to Petitioner).

FOR FURTHER INFORMATION CONTACT: Andrew J. Rhodes, Media Bureau, (202) 418–2180.

SUPPLEMENTARY INFORMATION: This is a summary of the Commission's Notice of Proposed Rule Making, MB Docket No. 06–88, adopted June 7, 2006, and released June 9, 2006. The full text of this Commission decision is available for inspection and copying during normal business hours in the Commission's Reference Center, 445 Twelfth Street, SW., Washington, DC 20554. The complete text of this decision may also be purchased from the Commission's duplicating contractor, Best Copy and Printing, Inc., 445 12th Street, SW., Room CY–B402, Washington, DC 20054, telephone 1–800–378–3160 or *http://www.BCPIWEB.com.* This document does not contain proposed information collection requirements subject to the Paperwork Reduction Act of 1995, Public Law 104–13. In addition, therefore, it does not contain any proposed information collection burden ''for small business concerns with fewer than 25 employees,'' pursuant to the Small Business Paperwork Relief Act of 2002, Public Law 107–198, *see* 44 U.S.C. 3506(c)(4).

Pursuant to Section 1.420(g)(3) of the Commission's Rules, we shall not accept competing expressions of interest pertaining to the use of Channel 226C3 at Boonville, Missouri. Channel 226C3 can be allotted at Boonville at proposed reference coordinates of 38–51–17 NL and 92–38–17 WL.

To accommodate the upgrade at Boonville, the document also proposes the substitution of Channel 272A for vacant but applied for Channel 226A at Wheatland, Missouri. Comment is requested from both the rulemaking petitioner and World Radio Link, Inc. (''WRL''), the applicant for Channel 226A, Wheatland, on the tentative conclusion that WRL's application is not entitled to cut-off protection vis-à-vis the Boonville rulemaking petition and that WRL can be required to amend its application to specify Channel 272A, Wheatland, at a rule-compliant site because the application was filed after the rulemaking petition. The proposed reference coordinates for Channel 272A at Wheatland, MO, are 37–58–44 NL and 93–26–49 WL.

Provisions of the Regulatory Flexibility Act of 1980 do not apply to this proceeding.

Members of the public should note that from the time a Notice of Proposed Rule Making is issued until the matter is no longer subject to Commission consideration or court review, all *ex parte* contacts are prohibited in Commission proceedings, such as this one, which involve channel allotments. See 47 CFR 1.1204(b) for rules governing permissible *ex parte* contact.

For information regarding proper filing procedures for comments, see 47 CFR 1.415 and 1.420.

List of Subjects in 47 CFR Part 73

Radio, Radio broadcasting.

For the reasons discussed in the preamble, the Federal Communications Commission proposes to amend 47 CFR part 73 as follows:

PART 73—RADIO BROADCAST SERVICES

1. The authority citation for part 73 continues to read as follows:

Authority: 47 U.S.C. 154, 303, 334, 336.

§ 73.202 [Amended]

2. Section 73.202(b), the Table of FM Allotments under Missouri, is amended by removing Channel 226A and adding Channel 226C3 at Boonville and by removing Channel 226A and adding Channel 272A at Wheatland.

Federal Communications Commission.

John A. Karousos,

Assistant Chief, Audio Division, Media Bureau.

[FR Doc. E6–10007 Filed 6–27–06; 8:45 am]

BILLING CODE 6712–01–P

FEDERAL COMMUNICATIONS COMMISSION

47 CFR Part 73

[DA 06–1230; MB Docket No. 05–295; RM–11280]

Radio Broadcasting Services; Cumberland, KY; Glade Spring, Marion, and Weber City, VA

AGENCY: Federal Communications Commission.

ACTION: Proposed rule; denial.

SUMMARY: The staff denied a petition for rulemaking filed by JBL Broadcasting, Inc. to upgrade, reallot, and change the community of license its Station WVEK–FM, from Channel 274A, Cumberland, Kentucky, to Channel 274C3, Weber City, Virginia, because one of the required channel changes to accommodate this proposal is short-spaced in violation of Section 73.207(a) of the Commission's rules. With this action, the proceeding is terminated.

FOR FURTHER INFORMATION CONTACT: Andrew J. Rhodes, Media Bureau, (202) 418–2180.

SUPPLEMENTARY INFORMATION: This is a synopsis of the Commission's Report and Order, MB Docket No. 05–295, adopted June 7, 2006 and released June 9, 2006. The full text of this Commission decision is available for inspection and copying during normal business hours in the FCC Reference Information Center (Room CY–A257), 445 12th Street, SW., Washington, DC. The complete text of this decision may also be purchased from the

Commission's copy contractor, Best Copy and Printing, Inc., Portals II, 445 12th Street, SW., Room CY–B402, Washington, DC 20054, telephone 1–800–378–3160 or *http://www.BCPIWEB.com.*

This rulemaking petition was proposed in a *Notice of Proposed Rule Making and Order to Show Cause. See* 70 FR 70777, November 11, 2005. To accommodate the upgrade and reallotment of Station WVEK–FM to Weber City, it also proposed (1) the substitution of Channel 263A for then vacant Channel 274A at Glade, Spring, VA; and (2) the substitution of Channel 273A for Channel 263A at Marion, VA, and the modification of Station WOLD–FM's license accordingly. The rulemaking petition was denied because the proposed allotment of Channel 273A at Marion, Virginia is 6.6 and 0.6 kilometers short-spaced to two mutually exclusive applications for a new FM station on Channel 273A at Shawsville, Virginia.

This document is not subject to the Congressional Review Act. (The Commission, is, therefore, not required to submit a copy of this Report and Order to GAO, pursuant to the Congressional Review Act, *see* 5 U.S.C. 801(a)(1)(A) because the proposed rule was denied.)

Federal Communications Commission.

John A. Karousos,

Assistant Chief, Audio Division, Media Bureau.

[FR Doc. E6–10008 Filed 6–27–06; 8:45 am]

BILLING CODE 6712–01–P

DEPARTMENT OF THE INTERIOR

Fish and Wildlife Service

50 CFR Parts 10, 13, 17, and 23

RIN 1018–AD87

Revision of Regulations for the Convention on International Trade in Endangered Species of Wild Fauna and Flora (CITES); Reopening of the Comment Period

AGENCY: Fish and Wildlife Service, Interior.

ACTION: Proposed rule; notice of reopening of comment period.

SUMMARY: We, the Fish and Wildlife Service (Service), give notice that we are reopening the comment period for the proposed rule to revise the regulations for the Convention on International Trade in Endangered Species of Wild Fauna and Flora (CITES). We are reopening the public comment period to allow interested parties additional time to comment on the proposed rule. The proposed rule was published and the public comment period initially opened on April 19, 2006 (71 FR 20168). In response to requests, we are reopening the public comment period for an additional 30 days.

DATES: Comments must be received by July 28, 2006. If you previously submitted comments on this proposed rule, you do not need to resubmit them during this comment period. Any comments received after the closing date may not be considered in the final determination on the proposal.

ADDRESSES: You may send comments, identified by RIN 1018–AD87, by one of the following methods:

- *Federal e-Rulemaking Portal: http://www.regulations.gov.* Follow the instructions for submitting comments.
- *E-mail: part23@fws.gov.*
- *Fax:* (703) 358–2280.
- *Mail or hand delivery:* Dr. Peter Thomas, Chief, Division of Management Authority, U.S. Fish and Wildlife Service, 4401 N. Fairfax Drive, Room 700, Arlington, Virginia 22203.

See Public Comments Solicited at the end of **SUPPLEMENTARY INFORMATION** for further information about submitting comments. All comments received will be available for public inspection by appointment from 7:45 a.m. to 4:15 p.m., Monday through Friday, at the above address.

Comments specific to the information collection aspects of this proposed rule should be submitted to the Desk Officer for the Department of the Interior at OMB–OIRA via facsimile or e-mail using the following fax number or e-mail address: (202) 395–6566 (fax); *OIRA_DOCKET@omb.eop.gov* (e-mail). Please provide a copy of your comments to the U.S. Fish and Wildlife Service's Information Collection Officer, 4401 N. Fairfax Drive, MS 222 ARLSQ, Arlington, Virginia 22203; (703) 358–2269 (fax); or *hope_grey@fws.gov* (e-mail).

FOR FURTHER INFORMATION CONTACT: Dr. Peter Thomas, at the above address (telephone, (703) 358–2093; fax, (703) 358–2280).

SUPPLEMENTARY INFORMATION:

Background

CITES is a treaty that regulates international trade in certain protected species. The United States was one of the original signatories to the Treaty, which has been in effect since July 1, 1975. CITES uses a system of permits and certificates to help ensure that international trade is legal and does not threaten the survival of wildlife or plant species in the wild. Currently 169 countries have ratified, accepted, approved, or acceded to CITES; these countries are known as Parties. In the United States, CITES is implemented under the Endangered Species Act, and implementation authority for CITES has been delegated to the Service. We implement CITES through regulations in 50 CFR part 23. Changes to the interpretation and implementation of CITES and amendments to the listing of species in the CITES Appendices occur at meetings of the Conference of the Parties (CoP), which are held every 2 to 3 years.

We published a proposed rule on May 8, 2000 (65 FR 26664) (2000 proposal), to incorporate in the CITES regulations at 50 CFR part 23 needed changes resulting from CoP2 through CoP10. The 2000 proposal was never finalized. On April 19, 2006, we published a new proposed rule (71 FR 20168) to incorporate, as appropriate, applicable resolutions adopted at CoP2 through CoP13. We reviewed all of the comments received on the 2000 proposal and addressed them where appropriate in the current proposed rule. The initial comment period on this proposed rule closed on June 19, 2006. In response to requests we received, we are reopening the comment period for an additional 30 days.

Public Comments Solicited

We invite interested organizations and the public to comment on the proposed rule, which generally reflects the way we currently implement CITES. We have drafted the proposal as part of our ongoing permits reform effort to simplify procedures, use risk assessment to reduce paperwork while still ensuring effective species conservation, and help people understand how to conduct international trade in CITES species. We are seeking comments, in particular, on whether the provisions of the proposed rule allow the affected public to effectively comply with CITES.

When providing comments, to the extent possible, reference the section of the proposed regulations on which you are commenting and give the category of your comments. Select one of the following categories: (1) International organization; (2) government; (3) nongovernmental conservation organization; (4) humane or animal welfare organization; (5) wildlife/pet business; (6) other business; or (7) private citizen. You may send comments via e-mail to: *part23@fws.gov.* Please submit Internet comments as an ASCII file, avoiding the use of special characters and any form of encryption.

Also, please reference in your e-mail message the following information: ''IN 1018–AD87''; your name and mailing address; and the category of your comments.

Our practice is to make comments, including names and home addresses of respondents, available for public review during regular business hours. Any person commenting may request that we withhold their name and home address, which we will honor to the extent allowable by law. In some circumstances, we may also withhold a commenter's identity, as allowable by law. If you wish us to withhold your name and address or e-mail address, you must state this request prominently at the beginning of your comments. We will not, however, consider anonymous comments. To the extent consistent with applicable law, we will make all submissions from organizations or businesses, and from individuals identifying themselves as representatives or officials of organizations or businesses, available for public inspection in their entirety. Comments and materials received will be available for public inspection by appointment, from 7:45 a.m. to 4:15 p.m., at the Division of Management Authority (see **ADDRESSES** section).

Authority

The authority for this action is 27 U.S.C. 1087 and 16 U.S.C. 1531 *et seq.*

Dated: June 19, 2006.

Matt Hogan,

Acting Assistant Secretary for Fish and Wildlife and Parks.

[FR Doc. E6–10150 Filed 6–27–06; 8:45 am]

BILLING CODE 4310–55–P

DEPARTMENT OF THE INTERIOR

Fish and Wildlife Service

50 CFR Part 17

Endangered and Threatened Wildlife and Plants: Notice of Finding on a Petition To Delist the Morelet's Crocodile From the List of Threatened and Endangered Species

AGENCY: Fish and Wildlife Service, Interior.

ACTION: Notice of petition finding.

SUMMARY: The U.S. Fish and Wildlife Service (Service) announces a 90-day finding for a petition to delist the Morelet's crocodile (*Crocodylus moreletii*) throughout its range from the Endangered Species Act of 1973, as amended. The Service finds that the petitioner has presented substantial scientific and commercial information indicating that the action may be warranted. A status review of the species is initiated. We seek comments on the petition or information on status of the species, particularly in Guatemala and Belize.

DATES: This finding was made on June 21, 2006. Comments and information may be submitted until September 26, 2006.

ADDRESSES: Submit comments, information, and questions to the Chief, Division of Scientific Authority, U.S. Fish and Wildlife Service, 4401 N. Fairfax Drive, Room 750, Arlington, VA 22203, USA; or by fax (703–358–2276) or by e-mail (*ScientificAuthority@fws.gov*). Comments and supporting information will be available for public inspection, by appointment, from 8 a.m. to 4 p.m. at the above address.

FOR FURTHER INFORMATION CONTACT: Robert R. Gabel, Chief, Division of Scientific Authority at the above address; or by telephone, 703–358–1708; fax, 703–358–2276; or e-mail, *ScientificAuthority@fws.gov.*

SUPPLEMENTARY INFORMATION:

Background

Section 4(b)(3)(A) of the Endangered Species Act of 1973 (Act), as amended (16 U.S.C. 1531 *et seq.*), requires the Service to make a finding on whether a petition to list, delist, or reclassify a species has presented substantial scientific or commercial information indicating that the requested action may be warranted. This finding is to be based on all information available to us at the time the finding is made. To the maximum extent practicable, the finding shall be made within 90 days following receipt of the petition (this finding is referred to as the ''90-day finding'') and published promptly in the **Federal Register.** If the finding is that substantial information was presented indicating that the requested action may be warranted, Section 4(b)(3)(A) of the Act requires the Service to commence a status review of the species if one has not already been initiated under the Service's internal candidate-assessment process.

The Service has made a 90-day finding on a petition to remove from the List of Endangered and Threatened Wildlife (50 CFR 17.11) the Morelet's crocodile (*Crocodylus moreletii*), currently listed as endangered under the Act. The petition was submitted by Mexico's Comisión Nacional para el Conocimiento y Uso de la Biodiversidad (CONABIO; National Commission for the Understanding and Use of Biodiversity), and was received by the Service on May 26, 2005.

The documents provided by the petitioner to substantiate the petition included: the raw data and results of a recent population survey and a population viability analysis for the Morelet's crocodile in Mexico with extrapolations for Belize and Guatemala; a detailed analysis of the species against the five factors to be considered by the Service in determining whether to add, reclassify, or remove a species from the list of endangered and threatened species, as per Section 4(a)(1) of the Act; a reevaluation of the risk category assignable to the Morelet's crocodile under the current criteria of The World Conservation Union (IUCN); a reevaluation of the current status of the Morelet's crocodile under Mexican law; information on the Mexican legal framework as related to the conservation and sustainable use of the Morelet's crocodile; and information on conservation actions in Mexico that support the improved status of the Morelet's crocodile. Most of the information provided by the petitioner emphasizes Mexican field studies and species management, with little direct information on the species in the other range countries, but 85 percent of the species' range is in Mexico. Thus, the petition represents substantial information for a significant portion of the species' range.

The Morelet's crocodile was listed as endangered throughout its entire range under the predecessor of the Act on June 2, 1970 (35 FR 8495). The species is found naturally along the Atlantic coast of Mexico and northern Central America (*i.e.,* Belize and Guatemala), where it inhabits freshwater habitats such as marshes, swamps, ponds, lagoons, and slow-moving rivers (Ross 1998).

Throughout the Morelet's crocodile's range, modification of wetlands for agriculture, ranching, development, aquaculture, and plague control previously contributed to significant declines in the species during the 1950s and 1960s (Ross 1998). To reduce the overall impact of habitat loss on biodiversity, all three range countries of the Morelet's crocodile have established protected areas, many of which are inhabited by the Morelet's crocodile. In Mexico, approximately 20 protected areas, comprising an area of 51,867 square kilometers, are inhabited by the Morelet's crocodile (CONABIO 2005). Furthermore, using field data and computer models, CONABIO has recently estimated that, in Mexico alone, a little over 200,000 square kilometers of suitable habitat remain

available for the species (CONABIO 2005). Whether or not all suitable habitat contains Morelet's crocodiles is unknown. However, the species was found to be widespread and abundant based on sampling at 62 localities where the computer model identified suitable habitat and, therefore, is likely to occur in unsampled localities with suitable habitat.

Although habitat destruction and deterioration continue to occur throughout the range of the Morelet's crocodile, available information suggests that the impact of these activities on wild populations of this species may vary according to the type of activity and its location (Alvarez 1998; CONABIO 2005). For example, although agriculture and ranching reduce forest cover, local farmers and ranchers usually set aside bodies of water for use by cattle and other domesticated animals, indirectly protecting some Morelet's crocodile habitat. In some parts of Mexico, establishment of Morelet's crocodiles in these water sources is not only tolerated, but in some instances encouraged, by ranchers themselves who actively transfer crocodiles to these sites because of their belief that bodies of water inhabited by crocodiles do not dry up. Oil companies in Mexico have further modified wetlands by constructing canals to access oil-drilling rigs. Although the creation of these canals results in fragmentation and reduction of coastal wetlands used by crocodiles, they indirectly increase the amount of habitat available to Morelet's crocodiles, which are able to occupy these artificially created aquatic environments.

In addition to habitat destruction, the IUCN Crocodile Specialist Group identified over-exploitation as the second major factor responsible for the decline of the Morelet's crocodile (Ross 1998). Uncontrolled hunting for hides greatly reduced wild populations of Morelet's crocodile during the 1940s and 1950s, which prompted the inclusion of this crocodile species in Appendix I of the Convention on International Trade in Endangered Species of Wild Fauna and Flora (CITES) on July 1, 1975. Listing in CITES Appendix I prohibits international trade (including importation into the United States) in the species for primarily commercial purposes. Limited trade for non-commercial purposes may be allowed if it is not detrimental to the survival of the species. In addition to the international ban on commercial trade by CITES, all three range countries have enacted laws, still in place, protecting the Morelet's crocodile within their territories (Ross 1998; CONABIO 2005).

Whereas a policy of strict protection once appeared to be the best and only way to conserve endangered species, many countries now see that an appropriate means of protecting some species is through farming, ranching, or controlled harvest, and then trade. Such an approach can provide incentives for conservation of species if properly implemented. Although no ranching or farming is known to exist in either Belize or Guatemala (Ross 1998), the Government of Mexico has developed a comprehensive conservation and management program (Proyecto de Conservación, Manejo y Aprovechamiento Sustentable de los Cocodrilos [Project for the Conservation, Management and Sustainable Use of Crocodiles]) for its three crocodilian species (Morelet's crocodile, American crocodile [*Crocodilus acutus*], and common caiman [*Caiman crocodylus fuscus*]), which includes sustainable use of the species through captive breeding (Alvarez 1998). Under Mexican law, live specimens of Morelet's crocodile may be removed from the wild only to establish parental stock for captive-breeding operations registered with the Government of Mexico. Of all Morelet's crocodile hatchlings produced in captivity, ten percent of them must be set aside for reintroductions into the wild or as breeding stock for other crocodile farms in the country. Only operations capable of breeding Morelet's crocodiles in captivity to the F2 generation are given authorization to kill their crocodiles for commercial purposes. Thus, registered breeding farms reduce harvest pressure on the wild population and augment the wild population through reintroduction of captive-reared young. Adherence to CITES crocodile-marking requirements minimizes the potential for substitution of illegal skins or other parts, and reduces the trade-control problems caused by the similarity in appearance of skins and products from different species of crocodilians. Existing regulatory mechanisms such as CITES and Mexican domestic legislation controlling the harvest and export of Morelet's crocodile skins, parts, and products are playing a role in the recovery of this species.

Between 1982 and 2005, the global risk status of the Morelet's crocodile has changed considerably. In 1982, it was categorized as ''endangered'' by the IUCN. By 1996, the species had been reassigned to the ''low risk, conservation dependent'' category (Ross 1998), a categorization still in place. However, a preliminary reevaluation of the risk status of the Morelet's crocodile conducted by Mexico using the revised IUCN criteria indicates that the species may qualify for categorization as of ''least concern'' (CONABIO 2005).

To better assess the risk status of the species in the wild, during 2002–2004, CONABIO financed a field survey in 10 Mexican states to determine the relative abundance of the Morelet's crocodile in the wild and gather new information on habitat quality. Based on that study, other available scientific literature, and a workshop of experts, CONABIO has estimated the current global wild Morelet's crocodile population to be around 102,400 animals, with 79,700 in Mexico and, by extrapolation, 13,900 in Guatemala and 8,800 in Belize (CONABIO 2005). Furthermore, a population viability analysis indicates that the probability of the species going extinct over the next 500 years, using a global population of 30,000 (less than ⅓ of the actual population estimate), is 13.8 percent (CONABIO 2005).

Therefore, we find that the petition presents substantial information indicating that the requested action may be warranted. Specifically, the petitioner has presented substantial scientific and commercial information indicating that the Morelet's crocodile is abundant and widely distributed, particularly in Mexico (the largest part of its range), and that the national and international regulatory mechanisms currently in place may have eliminated the danger of extinction within the foreseeable future.

Pursuant to section 4(b)(3)(A), we hereby commence a review of the status of the Morelet's crocodile. We encourage the submission of appropriate data, opinions, and publications regarding the subject petition or the status of the species. In particular, we seek information on the status of the species in Guatemala and Belize.

Our practice is to make comments, including names and home addresses of respondents, available for public review during regular business hours. Individual respondents may request that we withhold their home address from the rulemaking record, which we will honor to the extent allowable by law. In some circumstances, we may also withhold from the rulemaking record a respondent's identity, as allowable by law. If you wish for us to withhold your name and/or address, you must state this prominently at the beginning of your comment. However, we will not consider anonymous comments. We will make all submissions from organizations or businesses, and from individuals identifying themselves as representatives or officials of

organizations or businesses, available for public inspection in their entirety.

Section 4(b)(3)(B) of the Act requires that we make a finding within 12 months of receipt of the petition as to whether removal of the Morelet's crocodile from the List of Endangered and Threatened Wildlife is warranted, not warranted, or warranted but precluded by pending proposals.

References Cited

Alvarez, J. 1998. Conservation and management of *Crocodylus moreletii* in Mexico. Trip Report—July 1998. Unpublished document.

CONABIO (Comisión Nacional para el Conocimiento y Uso de la Biodiversidad). 2005. Proposal for the reclassification of Morelet's crocodile (*Crocodylus moreletii*) in the Endangered Species Act (ESA) of the United States of America.

Ross, J.P. 1998. Crocodiles: Status Survey and Conservation Action Plan. Second Edition. IUCN/SSC Crocodile Specialist Group. IUCN, Gland, Switzerland and Cambridge, United Kingdom.

Author

The primary author of this proposed rule is Dr. Javier Alvarez, Division of Scientific Authority, U.S. Fish and Wildlife Service, 4401 North Fairfax Drive, Room 750, Arlington, Virginia 22203.

Dated: June 21, 2006.

Kenneth Stansell,

Acting Director, Fish and Wildlife Service.

[FR Doc. E6–10149 Filed 6–27–06; 8:45 am]

BILLING CODE 4310–55–P

DEPARTMENT OF THE INTERIOR

Fish and Wildlife Service

50 CFR Part 17

RIN 1018–AU58

Endangered and Threatened Wildlife and Plants; Withdrawal of the Proposed Rule To List the Flat-Tailed Horned Lizard as Threatened

AGENCY: Fish and Wildlife Service, Interior.

ACTION: Proposed rule; withdrawal.

SUMMARY: We, the Fish and Wildlife Service (Service), have determined that the proposed listing of the flat-tailed horned lizard (*Phrynosoma mcallii*) as a threatened species under the Endangered Species Act (Act) of 1973, as amended, is not warranted and, thus, we withdraw our November 29, 1993, proposed rule (58 FR 62625). As stated in our January 3, 2003, withdrawal of the proposed rule to list the species as threatened (68 FR 331), we have made this determination because threats to the species as identified in the November 29, 1993, proposed rule are not significant, and available data do not indicate that the threats to the species and its habitat, as analyzed under the five listing factors described in section 4(a)(1) of the Act, are likely to endanger the species in the foreseeable future throughout all or a significant portion of its range. The analyses and conclusions contained in the January 3, 2003, withdrawal (68 FR 331) are incorporated herein by reference subject to the revisions contained in this notice. In this revised withdrawal, we have re-examined the lost historical habitat of the flat-tailed horned lizard in relation to our January 3, 2003, withdrawal of the proposed listing rule and have determined that the lost historical habitat is not a significant portion of the flat-tailed horned lizard's range and does not result in the species likely becoming endangered in the foreseeable future throughout all or a significant portion of its range.

ADDRESSES: Supporting documentation for this rulemaking is available for public inspection, by appointment, during normal business hours at the U.S. Fish and Wildlife Service, Carlsbad Fish and Wildlife Office, 6010 Hidden Valley Road, Carlsbad, CA 92011.

FOR FURTHER INFORMATION CONTACT: Jim Bartel, Field Supervisor, at the above address (telephone, 760–431–9440, or fax, 760–431–9624).

SUPPLEMENTARY INFORMATION:

Background

Information on the biology and ecology of this species, factors affecting the species, and current conservation measures applicable to this species can be found in the January 3, 2003, withdrawal of the proposed listing rule (68 FR 331). This document primarily contains information relevant to the current and historical range of this species and the issue of the significance of the lost habitat. We also address the status of several projects and ongoing actions as they relate to the flat-tailed horned lizard and provide an update on several of the actions outlined in the 1997 Flat-Tailed Horned Lizard Conservation Agreement (*see* ''Summary of Comments and Recommendations'' section).

The flat-tailed horned lizard is most commonly found in sandy flats and valleys within creosote (*Larrea tridentata*) and white bursage (*Ambrosia dumosa*) plant associations or series (Turner *et al.* 1980; Muth and Fisher 1992; Foreman 1997). This series is generally found on alluvial fans and upland slopes with well-drained soils that often have a pavement surface (Sawyer and Keeler-Wolf 1995), but flat-tailed horned lizards are usually found in areas with windblown sand deposits. The flat-tailed horned lizard is endemic to the northern Sonoran Desert in southern California, southwestern Arizona, and adjoining portions of northwestern Sonora and Baja California Norte, Mexico (Turner and Medica 1982). Within California, the flat-tailed horned lizard currently ranges in the Colorado Desert portion of the Sonoran Desert, from the Coachella Valley (the northernmost extent of its range), south along both sides of the Imperial Valley. On the west side of the Imperial Valley, the species ranges into the Borrego Valley, Ocotillo Wells area, West Mesa, and Yuha Basin. On the east side of Imperial Valley, the species occurs in the Bureau of Land Management (BLM) Dos Palmas Area of Critical Environmental Concern (ACEC), but predominantly occurs in East Mesa and in areas adjoining the Algodones Dunes (*i.e.*, Imperial Sand Dunes, Glamis Sand Dunes). In Arizona, the flat-tailed horned lizard is found in the Yuma Desert portion of the Sonoran Desert, south of the Gila River and west of the Gila and Butler Mountains (Rorabaugh et al. 1987). The flat-tailed horned lizard is patchily distributed at varying densities throughout its range, and although the species was once recorded at 1,706 feet (ft) (520 meters (m)) above sea level, it is more commonly found below 820 ft (250 m) in flat areas or areas with gentle slopes (Turner et al. 1980).

The range of the flat-tailed horned lizard extends into Mexico from the international border in the Yuha Basin in California, south along the west side of Laguna Salada in Baja California; and from the international border in the Yuma Desert in Arizona, south and east through the Pinacate Region to the sandy plains around Puerto Penasco and Bahia de San Jorge, Sonora (Johnson and Spicer 1985, Gonzales-Romero and Alvarez-Cardenas 1989).

Most of the range of the flat-tailed horned lizard in California and Baja California Norte is in the Salton Trough, a low-lying depression that is an extension of the Gulf of California. The lowest areas of the Salton Trough are below sea level and are protected from inundation from the ocean by the Colorado River delta. The geological record indicates that, as the Colorado River meandered across its river delta, it would periodically flow into the Salton Trough and form Lake Cahuilla in the bottom of the Trough. Over time,

the river would again flow into the Gulf of California, and Lake Cahuilla would evaporate (Waters 1983). As a result of dams, channelization, and water usage, such flooding no longer occurs.

As discussed in the January 3, 2003, withdrawal of the proposed listing rule (68 FR 331), the range of this species in the United States has been analyzed by Hodges (1997) and the range of the species in the United States and Mexico has been analyzed by Johnson and Spicer (1985). The 2003 revision of the 1997 Flat-tailed Horned Lizard Rangewide Management Strategy (herein referred to as the 2003 Rangewide Management Strategy) is the most recent analysis of the species' range in the United States and Mexico (FTHL–ICC 2003).

Hodges (1997) estimated that the flat-tailed horned lizard historically (prior to agricultural or urban development of either the Coachella or Imperial Valleys) occupied up to 2,419,200 acres (ac) (979,037 hectares (ha)) in Arizona and California. Approximately 51 percent (1,243,339 ac (503,161 ha)) of the historical habitat identified by Hodges remains in the United States, with about 140,300 ac (56,770 ha) in Arizona and 1,103,040 ac (446,390 ha) in California (Hodges 1997). Hodges (1997) included the Salton Sea as historical habitat. However, we noted in the January 3, 2003, withdrawal that the Salton Sea area could arguably be considered ephemeral historical habitat, present or absent at times, as the area changed through time as a result of intermittent flooding and drying. At that time we did not consider the effect of the larger Lake Cahuilla. We estimated that if the area now occupied by the Salton Sea was not considered historical habitat, then, using Hodges' (1997) numbers, approximately 57 percent of historical habitat remains in the United States. Hodges' (1997) analysis did not include current or historical habitat for this species in Mexico.

Johnson and Spicer (1985) analyzed the current range and threats to the species in the United States and Mexico at that time. They estimated that in 1981 approximately 59 percent of the species' range occurred in Mexico (569,578 ac (230,500 ha)), with the majority of the range in Mexico occurring in the state of Sonora (492,975 ac (199,500 ha)). Johnson and Spicer (1985) also estimated that 50 percent of the species' habitat in California, Arizona, and Baja California Norte and 14 percent of the species' habitat in Sonora was in danger of conversion to agriculture or urban development and/or degradation due to factors such as off-highway vehicle recreation. Overall, 21 percent of the species' habitat throughout its range was considered in danger of being lost or degraded (Johnson and Spicer 1985).

The 2003 Rangewide Management Strategy contained updated information on the current and historical range of the species in the United States and Mexico and made available data on historical and current range in geographic information system (GIS) format (FTHL–ICC 2003). We analyzed the GIS data used in the 2003 Rangewide Management Strategy and estimated the size of the historical and current ranges. We estimated the extent of historic Lake Cahuilla by using a GIS digital elevation model and the estimated elevation the lake reached. We estimated the historical range of the flat-tailed horned lizard in the United States and Mexico to be 4,875,624 ac (1,973,095 ha).

Previous Federal Actions

On November 29, 1993, we published in the **Federal Register** a proposed rule to list the flat-tailed horned lizard as a threatened species pursuant to the Act (58 FR 62624). On May 16, 1997, in response to a lawsuit filed by the Defenders of Wildlife to compel us to make a final listing determination on the flat-tailed horned lizard, the District Court in Arizona ordered the Service to issue a final listing decision within 60 days. A month after the District Court's order, seven State and Federal agencies signed the Flat-Tailed Horned Lizard Conservation Agreement (referred to herein as the 1997 Conservation Agreement) to implement a Flat-tailed Horned Lizard Rangewide Management Strategy to protect the flat-tailed horned lizard on Federal lands. Pursuant to the 1997 Conservation Agreement, cooperating parties agreed to take voluntary steps aimed at ''reducing threats to the species, stabilizing the species'' populations, and maintaining its ecosystem.''

On July 15, 1997, we published in the **Federal Register** a final decision to withdraw the proposed rule to list the flat-tailed horned lizard as a threatened species (62 FR 37852). We based the withdrawal on three factors: (1) Population trend data did not conclusively demonstrate significant population declines; (2) some of the threats to the flat-tailed horned lizard habitat were misunderstood previously; and (3) we believed that the recently approved ''conservation agreement w[ould] ensure further reductions in threats.''

Six months following our withdrawal of the proposed listing rule, the Defenders of Wildlife filed a lawsuit challenging our decision. On June 16, 1999, the District Court for the Southern District of California granted summary judgment in our favor upholding our decision not to list the flat-tailed horned lizard. However, on July 31, 2001, the Ninth Circuit Court of Appeals reversed the lower court's ruling and directed the District Court to remand the matter back to us for further consideration in accordance with the legal standards outlined in its opinion. The case was remanded back to the Service because (1) the withdrawal did not expressly consider whether the flat-tailed horned lizard is likely to become an endangered species within the foreseeable future in a significant portion of its range; and (2) the withdrawal did not ''address the lizard's viability in a site-specific manner with regard to the putative benefits of the Conservation Agreement.''

On October 24, 2001, the District Court ordered the Service to reinstate the previously effective proposed listing rule within 60 calendar days and, thereafter, commence a 12-month statutory time schedule for a final listing decision, and render our final listing determination in compliance with the mandate of the Ninth Circuit Court's order. Accordingly, we published a notice in the **Federal Register** on December 26, 2001, announcing the reinstatement of the November 29, 1993, proposed rule to list the flat-tailed horned lizard as threatened and the opening of a 120-day public comment period on the reinstated proposed rule (66 FR 66384).

On January 3, 2003, we again published in the **Federal Register** a decision to withdraw the November 29, 1993, proposed rule to list the flat-tailed horned lizard as a threatened species (68 FR 331). The Service found the lizard to be in danger of extirpation in the Coachella Valley; however, we determined that the Coachella Valley is not a significant portion of the species' range. We concluded in the January 3, 2003, withdrawal that the flat-tailed horned lizard populations on either side of the Imperial Valley/Salton Sea and in Arizona were not likely to become endangered in the foreseeable future and that listing the species was not warranted.

The Tucson Herpetological Society and other environmental organizations and individuals filed a lawsuit challenging our January 3, 2003, withdrawal. On August 30, 2005, the U.S. District Court for the District of Arizona set aside our withdrawal of the proposed rule to list the flat-tailed horned lizard as a threatened species on the grounds that our withdrawal violated the Act because it failed to

determine whether the lost historical habitat for the flat-tailed horned lizard was a significant portion of the range for this species. With this exception, all other aspects of the January 3, 2003, withdrawal were upheld by the District Court.

On November 17, 2005, the District Court ordered the Service to submit for publication in the **Federal Register** by November 23, 2005, or as soon thereafter as was practicable, a notice advising the public that the January 3, 2003, withdrawal was vacated and that the November 29, 1993, proposed listing rule was reinstated. On December 7, 2005, we published a notice in the **Federal Register** vacating the January 3, 2003, withdrawal and restoring proposed status to the flat-tailed horned lizard (70 FR 72776).

The November 17, 2005, order limited the scope of the remand to specifically address whether the lost historical habitat is a significant portion of the range for the flat-tailed horned lizard. The Court further required the Service to publish a determination in the **Federal Register** by April 30, 2006, as to whether the lost historical habitat of the flat-tailed horned lizard constitutes a significant portion of the species' range based on the best scientific and commercial data available. On March 2, 2006, we published a notice announcing the reopening of a 14-day public comment period on the November 29, 1993, proposed rule to list the flat-tailed horned lizard under the Act (71 FR 10631). To ensure the public was provided with an adequate opportunity to comment on the matters identified by the Court, the parties filed a Joint Stipulation with the Court on March 28, 2006, to allow for an additional public comment period. On March 29, 2006, the Court granted our request for an extension of the April 30, 2006, deadline, and ordered us to submit the new final listing determination for the flat-tailed horned lizard to the **Federal Register** on or before the date 6 weeks after the close of the second comment period. The second comment period was opened from April 21, 2006 to May 8, 2006 (71 FR 20637). This withdrawal of the November 29, 1993, proposed listing rule complies with the Court's August 30, 2005, and November 17, 2005, orders.

For your convenience, here is a list of the primary **Federal Register** documents pertaining to the proposed listing of the flat-tailed horned lizard as threatened:

Action	Date	FR citation
Proposed rule to list the flat-tailed horned lizard as threatened	November 29, 1993	58 FR 62624
Withdrawal of proposed rule	July 15, 1997	62 FR 37852
Reinstatement of proposed rule; reopening of comment period	December 26, 2001	66 FR 66384
Withdrawal of proposed rule	January 3, 2003	68 FR 331
Reinstatement of proposed rule	December 7, 2005	70 FR 72776
Reopening of comment period	March 2, 2006	71 FR 10631
Reopening of comment period	April 21, 2006	71 FR 20637

Summary of Comments and Recommendations

During both public comment periods on the December 7, 2005 reinstatement of the proposed rule to list, we requested all interested parties to submit information pertaining to the flat-tailed horned lizard's lost historical habitat. We requested this information to make a reexamination based on the best scientific and commercial data currently available. We also reopened the comment period to admit into the record the 2003 revision of the Flat-tailed Horned Lizard Rangewide Management Strategy. During the public comment periods, we received written comments from a total of 29 entities. Nineteen entities advocated listing of the species, 5 entities advocated not listing the species, and 5 entities did not advocate either decision.

As stated previously, in its November 17, 2005 Order, the Court ordered that ''on remand the agency need only address the matters on which the court's August 30, 2005 Order * * * found the January 3, 2003 Withdrawal unlawful, which may summarily be identified as whether the lizard's lost historical habitat renders the species in danger of extinction in a significant portion of its range.'' We received two comments directly related to the issue of the flat-tailed horned lizard's lost historical habitat. However, for informational purposes, we have also provided responses to comments on other substantive issues as well. Similar comments are grouped together.

Comment 1: One commenter stated that there does not appear to be strong scientific evidence to establish the extent of the historical range of the lizard. The commenter stated that claims that east Imperial County and west Yuma County were historically occupied by flat-tailed horned lizards are unsupportable. The commenter indicates that the present range seems adequate to prevent the extinction of this species.

Our Response: Delineation of historical habitat is retrospective and not testable in the way that other scientific models are. However, based on knowledge of habitat preference for the species, early descriptions of habitat before development, and early museum records, a reasonable and defensible theoretical estimation of the broad-scale historical range of the species is possible. While there are a number of records of flat-tailed horned lizards from the Imperial Valley and the Yuma Valley in areas that are now developed, locality records do not fully delineate the theoretical range of the flat-tailed horned lizard. Historical museum records are summarized in Funk (1981).

Comment 2: One commenter stated that the habitat destroyed by human mediated processes and no longer available for the flat-tailed horned lizard in the Imperial, Coachella, and Yuma valleys was significant to the species from a metapopulation dynamics perspective because the availability of large, continuous patches of potentially available habitat provides areas for species to persist as resources (*i.e.* food, water, and habitat) shift geographically over time.

Our Response: We interpreted the commenter's statements to pertain to the importance of maintaining large-scale metapopulation dynamics between populations in the Imperial, Coachella, and Yuma valleys. Metapopulation dynamics refers to the process exhibited when local populations become extirpated in response to local conditions but are later recolonized by adjacent patches.

We acknowledge that large-scale metapopulation dynamics and gene flow have been disrupted by the loss of connectivity between populations in these areas; however, this loss of connectivity endangers primarily Coachella Valley populations because the other populations are large enough to be self-sustaining. We recognized the precarious status and possibility of extinction of the flat-tailed horned

lizard in the Coachella Valley in the January 3, 2003, withdrawal, further acknowledging that if the Coachella Valley populations go extinct, there is no connectivity for repopulation from other areas (*e.g.*, Imperial Valley). However, we determined that the Coachella Valley populations are not a distinct vertebrate population segment and that the Coachella Valley is not a significant portion of the species' range.

Relevant to the importance of maintaining large-scale metapopulation dynamics between Imperial and Yuma Valley populations, most of the intermittent and permanent habitat that has been lost due to human mediated processes (*e.g.*, urbanization and agriculture) was lost early in the 20th century. This lost habitat is not considered significant because of its small size relative to the entire range and because this area has been lost for nearly a century and the flat-tailed horned lizard has persisted in these areas.

As discussed in detail in the January 3, 2003, withdrawal of the proposed listing rule (68 FR 331), the available data concerning population abundance, trends, and threats do not suggest, outside the Coachella Valley, that flat-tailed horned lizard populations are declining in any of the geographic areas, or that because of this habitat loss and degradation the species is likely to become endangered within the foreseeable future throughout all or a significant portion of its range. As discussed below, recent estimates of population sizes in several management areas in the Imperial Valley (Ocotillo Wells Research Area, West Mesa, Yuha Basin, and East Mesa) and Yuma Valley (Yuma Desert Management Areas) since the January 3, 2003, withdrawal of the proposed listing rule indicate that, overall, no large decline in population size has occurred between 2003 and 2005 in areas for which we have more than one year of data.

Therefore, we do not believe the lost habitat is significant to the species from a large-scale metapopulation perspective, because populations in the Imperial and Yuma valleys appear to be large enough to be self-sustaining despite the loss of habitat between these valleys that occurred early in the 20th century.

Comment 3: Several commenters stated that this species needs the protection of the Endangered Species Act.

Our Response: As stated in our January 3, 2003, withdrawal of the proposed rule to list the species as threatened (68 FR 331), we have made this determination because threats to the species as identified in the November 29, 1993, proposed rule are not significant, and available data do not indicate that the threats to the species and its habitat, as analyzed under the five listing factors described in section 4(a)(1) of the Act, are likely to endanger the species in the foreseeable future throughout all or a significant portion of its range.

Also, we have determined, as discussed in this notice, that the lost historical habitat does not render the species in danger of extinction throughout all or a significant portion of its range. Commenters did not provide new information or data during either comment period on additional threats not already considered in the January 3, 2003, withdrawal.

Comment 4: Several commenters noted the impacts to the flat-tailed horned lizard that would be associated with the construction of the proposed Yuma Area Service Highway.

Our Response: The Yuma Area Service Highway has been discussed at many Arizona Interagency Coordinating Committee (ICC) meetings. Arizona ICC members met repeatedly with Arizona Department of Transportation (DOT) engineers to ensure compliance with the 2003 Rangewide Management Strategy. The Arizona DOT already had long-term plans to construct this highway when the 1997 Conservation Agreement was signed. Therefore, the western border of the Yuma Desert Management Area was defined as the edge of the right-of-way of the future Yuma Area Service Highway. Until the highway is built, the lands under jurisdiction of the signatories of the Conservation Agreement will be managed as part of the Yuma Desert Management Area. The highway, as proposed, would destroy 623 ac (252 ha) of flat-tailed horned lizard habitat and isolate 3,734 ac (1,511 ha) from the Yuma Desert Management Area. Thus, the Yuma Area Service Highway shrinks the 131,000-ac (53,000-ha) Yuma Desert Management Area by a relatively small amount. It is our understanding from the Arizona members of the ICC that Arizona DOT intends to pay compensation for 4,277 ac (1,731 ha) of flat-tailed horned lizard habitat impacted or isolated by the project and that fencing will be installed to deter lizards from crossing the pavement where they may be subject to mortality because of traffic.

Comment 5: Several commenters noted that the Bureau of Reclamation plans to construct a new reservoir, the All American Canal Drop 2 reservoir, on East Mesa in flat-tailed horned lizard habitat.

Our Response: The All American Canal Drop 2 reservoir, proposed for construction in Imperial County, California, was discussed extensively at the flat-tailed horned lizard ICC meetings. The 621-acre (251-ha) reservoir, as proposed, will be built on the site formerly used for the Brock Ranch Experimental Research Station and will be adjacent to, but outside the boundaries of the 115,300-acre (46,660-ha) East Mesa Management Area. A map released by the Bureau of Reclamation (BOR) showed that half of the reservoir would be within the boundaries of the East Mesa Management Area. However, according to the BLM, that map was in error. The input canal from the Coachella Canal to the Drop 2 reservoir will cross BLM land in the East Mesa Management Area, along the southern boundary, and will directly impact 295 ac (119 ha) in the Management Area. The input canal will also isolate two small areas of the Management Area; however, these areas are of limited value to flat-tailed horned lizards. The first area is 120 ac (49 ha) in the southeast corner of the Management Area that is already highly impacted by off-highway vehicle (OHV) activity. The second area is 320 ac (129 ha) on private land that is currently an abandoned jojoba farm and not suitable habitat for flat-tailed horned lizards. It is our understanding from BLM staff that all areas impacted, including the areas to be isolated, will be compensated for by BOR at the ratio dictated by the 2003 Rangewide Management Strategy. Since this Management Area is not fenced, the location of the input canal will benefit the Management Area by creating a barrier that will discourage illegal OHV activity. The amount of habitat impacted will fall below the 1 percent of Federal lands allowed by the 2003 Rangewide Management Strategy.

Comment 6: Several commenters pointed out plans for geothermal plants in flat-tailed horned lizard habitat.

Our Response: It is our understanding from BLM staff that several applications for geothermal leases in the West Mesa Management Area and the Ocotillo Wells State Vehicle Recreation Area have been submitted. At this point in time, the construction of geothermal plants is speculative. A lease allows a project applicant to evaluate the site for geothermal energy. If it is then suitable, the applicant and the BLM must go through the National Environmental Policy Act (NEPA) process prior to constructing the geothermal facilities. The NEPA requires the Federal agencies to consider the environmental impacts, including impacts to listed and sensitive

species, of their proposed actions and reasonable alternatives to those actions.

Comment 7: Several commenters noted the proposal for a large solar energy plant in flat-tailed horned lizard habitat in Imperial Valley.

Our Response: The solar plant was originally proposed to be built in the West Mesa Management Area, but because of the 2003 Rangewide Management Strategy the BLM asked that it be moved out of the West Mesa Management Area and the project proponents agreed. According to the BLM, the current proposed site is on BLM land, is not within any Management Area occupied by the flat-tailed horned lizard, and compensation for any flat-tailed horned lizard lost habitat will be applied, if applicable.

Comment 8: Several commenters noted the extensive Border Patrol activity in flat-tailed horned lizard habitat.

Our Response: The Border Patrol is not a signatory of the 1997 Conservation Agreement; however, the ICC works with them on conservation issues. In California, new Border Patrol agents are educated on the impacts to biological and archaeological resources by driving off-road. Recently, an educational video paid for by flat-tailed horned lizard compensation funds was distributed to Border Patrol offices and they agreed to show the video to all existing agents as well as incorporate it into the training for new agents. It is our understanding that the ICC intends to continue working with the Border Patrol to minimize impacts to flat-tailed horned lizard and its habitat associated with the performance of their duties along the border.

Comment 9: Several commenters stated that the 1997 Conservation Agreement and Rangewide Management Strategy are not working.

Our Response: Progress toward the goals of the 1997 Rangewide Management Strategy was evaluated during the 2003 revision of the Rangewide Management Strategy and yearly in annual reports. Some of the progress made includes the following: Between 1997 and 2003, surface disturbance was kept well below the 1 percent cap in each of the five Management Areas. Designation of the Management Areas has occurred and the 2003 Rangewide Management Strategy has become an official part of the BLM California Desert Conservation Area plan. The Management Areas comprise 485,000 ac (196,273 ha) or 758 square miles (1,963 square kilometers) of presumably the best flat-tailed horned lizard habitat on Federal lands. Compensation funds have been collected for projects in flat-tailed horned lizard habitat and will continue to be collected. These funds have been used to purchase private lands within Management Areas.

As outlined in the 1997 Conservation Agreement, research and monitoring for this species have been funded. Research on basic biology such as significant predators, home range size, diet, and reproduction has been conducted since the 1997 Conservation Agreement was signed. Research on impacts such as edge effects and OHV effects has also been conducted. Studies have also been conducted, or are planned, on the efficacy of mitigation measures such as relocation of lizards from project sites and use of under-highway culverts by this species. Methods to monitor this species, such as scat counts, mark-recapture, presence/absence, trapping webs, distance sampling, and occupancy estimation have been tested for this species, and population estimates have been obtained for four Management Areas and the Research Area. Based on these actions as well as others not explicitly mentioned above, we believe that the 1997 Conservation Agreement is helping to conserve the flat-tailed horned lizard and its habitat.

Summary of Factors Affecting the Species

Section 4 of the Act (16 U.S.C. 1531 (*et seq.*) and the regulations (50 CFR part 424) that implement the listing provisions of the Act set forth the procedures for adding species to the Federal list of endangered and threatened species. They provide that a species may be determined to be endangered or threatened if one or more of the following five factors are met:

A. The present or threatened destruction, modification, or curtailment of its habitat or range.

B. Overutilization for commercial, recreational, scientific, or educational purposes.

C. Disease or predation.

D. The inadequacy of existing regulatory mechanisms.

E. Other natural or manmade factors affecting its continued existence.

As stated above, the November 17, 2005, Court Order limited the scope of the remand to specifically address whether the lost historical habitat is a significant portion of the range for the flat-tailed horned lizard. (*See* the January 3, 2003, withdrawal of the proposed listing rule [68 FR 331] for the full discussion of the five factors and their application to the flat-tailed horned lizard.) Therefore, the sole purpose of this withdrawal is to reexamine and expand upon our previous discussions of the five factors in order to address whether the lost historical habitat is a significant portion of the range for the flat-tailed horned lizard. The analysis in this document will primarily reflect lost historical habitat as a component of factor A because factor A requires an analysis of whether the *curtailment* of a species' habitat or range is a threat to its continued existence.

Historical and Current Range, and Temporal Baseline

We consider the 2003 Rangewide Management Strategy to be the best scientific and commercial information available on the historical and current range of the species. The 2003 Rangewide Management Strategy builds on previous information on the range of the species (*i.e.,* Johnson and Spicer 1985; Hodges 1997) and bases the delineation of historical and current range on the presence of suitable habitat, known localities, and elevation (flat-tailed horned lizards have rarely been found above 750 ft in elevation). As stated above, we analyzed the GIS data used in the 2003 Rangewide Management Strategy, which depicted the approximate current and historical distribution of the flat-tailed horned lizard. We also used GIS to estimate the extent of historic Lake Cahuilla, which was subtracted from the current and historical range of the species. We used our analysis to estimate the historical range of the flat-tailed horned lizard in the United States and Mexico to be 4,875,624 ac (1,973,095 ha).

Temporal Baseline

In the memorandum of support for the District Court order of August 30, 2005, the Court ''found that the Service had failed to satisfy the Ninth Circuit's mandate in a prior phase of this case, by failing to examine whether lost historical habitat constituted a 'significant portion' of the species' range.'' In citing the Ninth Circuit, the District Court noted that the Service 'has discretion to choose the point in time at which to examine the range because neither the Ninth Circuit nor the [Endangered Species Act] provide 'a temporal baseline for assessing a species' total range' * * *. The point in time must be sometime in the past, however, and cannot be the current range.'' In identifying the lost historical habitat for the flat-tailed horned lizard, we determined it was appropriate to consider the available recorded historical information.

Lake Cahuilla

Lake Cahuilla is an important consideration in determining the historical range of the flat-tailed horned lizard. From prehistoric times to the formation of the current-day Salton Sea, Lake Cahuilla intermittently filled a portion of the Salton Trough. Thus, the lakebed was intermittent habitat for the flat-tailed horned lizard. Lake Cahuilla completely filled and evaporated 4 times between 700 to 1580 AD (Waters 1983). At other times, spring floods on the Colorado River would partially fill the trough. During the 1800s, reported episodes of inundation occurred in 1828, 1840, 1849, 1852, 1859, 1862, 1867, and 1897 (Littlefield 1966). A flood in 1891 created a water body of approximately the same surface area as the current Salton Sea (Sykes 1914). The 2003 Rangewide Management Strategy, in discussing the historical range of the flat-tailed horned lizard, states: ''The Salton Basin [Salton Trough] had been subjected to frequent inundation from the Colorado River even prior to the accidental flooding from 1905 through 1907, and it is questionable whether this area can be considered historic habitat.'' Flat-tailed horned lizards were likely killed during floods as the water rushed into the basin and recolonization occurred as the water evaporated.

Even when the lake was dry, a large portion of the dry lakebed was likely unsuitable habitat for flat-tailed horned lizards. The lowest point of the trough was covered in a thick deposit of salt left behind when the water evaporated (Free 1914), which was likely devoid of plant and animal life. This area is now covered by the Salton Sea. Desert sinks and playas like the Salton Trough are typically inhabited by a salt-tolerant community dominated by *Atriplex* (saltbush) species (Baldwin et al. 2002). In the saltiest and wettest parts of a desert sink, *Atriplex* is replaced by more salt-tolerant plants such as pickleweed (*Salicornia*), iodine bush (*Allenrolfea*), and seepweed (*Suaeda*). Parish (1914) defined the ''Salton Sink'' as the area between the shoreline of Lake Cahuilla and the then-shrinking Salton Sea. He characterized the vegetation within the Salton Sink as the *Atriplex* zone, because of the domination by *Atriplex* in the sink. ''Of this general flora of the Colorado Desert the xerophytic vegetation of the Sink is a part, differentiated mainly by the great preponderance of *Atriplex* spp. in its composition, so that it may be fittingly denominated the *Atriplex* zone'' (Parish 1914, p. 89). Creosote, a typical habitat associate for flat-tailed horned lizards, was characterized as ''frequent in arid soil throughout the Sink, but scattered and seldom dominant'' (Parish 1914, p. 109). Parish described white bursage, another typical habitat associate for flat-tailed horned lizards, as ''frequent in detrital soil and occasional in light alluvium. [Locations:] Mecca, Caleb, Durmid, Westmorland.'' He described detrital soils as primarily occurring on the northeast margin of the Sink. Thus, the lakebed of Lake Cahuilla was not the typical creosote-bursage habitat association as has been described for this species (Turner and Medica 1982, Turner et al. 1980, FTHL–ICC 2003).

The *Atriplex* community in the lakebed was, at best, likely marginal habitat for flat-tailed horned lizards. Flat-tailed horned lizards have been found in association with *Atriplex* in the Dos Palmas area and San Sebastian Marsh area, but a mark-recapture plot in desert sink scrub with no sand in the Dos Palmas ACEC found no flat-tailed horned lizards (Mark Massar, Wildlife Biologist, BLM, Palm Springs, pers. comm. 2005). The area surrounding San Sebastian Marsh is in the lakebed of Lake Cahuilla and mirrors the vegetation associations described by Parish (1914) with areas of *Atriplex,* iodine bush, and mesquite, but the San Sebastian Marsh area has yielded very few flat-tailed horned lizards (FTHL–ICC 2003). Turner *et al.* (1980) recognized that the lakebed appeared to be lesser quality habitat: ''In Imperial County, habitats above the old shoreline of Lake Cahuilla are better than those below the shoreline, possibly because soils above the old shoreline tend to be sandier.''

The first known historical record of a flat-tailed horned lizard from the lakebed of Lake Cahuilla was collected near the present-day city of Calexico (Klauber 1932). Other flat-tailed horned lizards were collected early in the 20th century near the present-day cities of Westmorland and Holtville and from the edges of the Salton Sea (Klauber 1932; Funk 1981; Turner et al. 1980). These areas are now urban or agricultural areas. Turner and others (1980), noting the few flat-tailed horned lizards found in association with *Atriplex,* suggested they may represent dispersing individuals. In most cases, flat-tailed horned lizard populations in *Atriplex* habitat appear to be sparse. The exception to this rule may be the high densities of flat-tailed horned lizards found associated with *Atriplex* in the Coachella Valley (FTHL–ICC 2003). However, the windblown sand preferred by flat-tailed horned lizards is found in adequate amounts in the Coachella Valley Preserve (Barrows 1996). The San Sebastian Marsh and Dos Palmas areas described above have little windblown sand. Parish (1914) describes the soils of the southern part of the sink (south of the current-day Salton Sea) as ''loams of very fine compact grain * * * with very small percentages of sand. They are permeable by water only to a slight degree.'' No information has been found on the amount of wind-deposited sand that was present in the lakebed. Free (1914) alludes to accretion dunes in the lakebed that may have been good flat-tailed horned lizard habitat. But Parish (1914), describing the vegetation of the Imperial Valley, reported ''wide expanses absolutely devoid of a single plant save in the infrequent furrows and channels which constitute the drainage system.''

The precise proportion of the lakebed that historically was habitat, and the quality of that habitat, is difficult to accurately determine. We do not know the precise proportions of specific plant communities that were present in the Salton Sink. We do not know the patterns of windblown sand deposition. Despite the difficulty in accurately determining historic conditions in the dry lakebed, we believe that it contained only a limited amount of suitable habitat, most of which is likely to have been marginal at best. Thus, even if the lakebed were considered historical habitat, it would not be significant to the species.

Additionally, recent work on the genetics of the flat-tailed horned lizard suggests that gene flow across the lakebed between the east and west sides of the Salton trough was low even before the current fragmentation due to development and agriculture (Mulcahy *et al.* 2006). The authors state: ''* * * suggesting that there has not been substantial gene flow across the Imperial Valley since the drying of Lake Cahuilla. Although historic localities exist in the Imperial Valley, genetic differences suggested limited gene flow across this region prior to human development.''

Lost Habitat

As discussed above, the area of the historical range periodically inundated by Lake Cahuilla was not important to the long-term viability of the flat-tailed horned lizard because this area was frequently unavailable and likely contained little quality habitat. Much of the area within the former Lake Cahuilla lakebed likely was not only intermittent, but low-quality habitat for the flat-tailed horned lizard, particularly the central salt deposit and saltier, less sandy portions of the *Atriplex* community. Thus, we determined this area should not be considered part of the species'

historical habitat. The remainder of this analysis considers the historical habitat outside the area of the former Lake Cahuilla to be the appropriate baseline for assessing the species' total range. Using our estimate that the former Lake Cahuilla was 1,309,409 ac (529,899 ha) based on a 39 ft (12 m) shoreline (Waters 1983) calculated with a GIS digital elevation model, the baseline for assessing the species' range (which excludes the former Lake Cahuilla) was approximately 4,875,624 ac (1,973,095 ha). Below we describe the significance of lost habitat within this delineated historical habitat (outside the area of the former Lake Cahuilla).

Approximately 1,103,201 ac (446,450 ha) have been lost, nearly entirely within two areas: the Coachella Valley, and Mexicali and Yuma areas. In the January 3, 2003, withdrawal, we determined that the Coachella Valley, including its lost associated habitat, is not a significant portion of the range. Near Mexicali, agriculture extends from Mexicali south to near the Gulf of California and east to the Colorado River. This block of lost habitat is contiguous (across the Colorado River) with the block of lost habitat in the Yuma area. The block of habitat that encompasses northeastern Baja California Norte and southwestern Arizona is the largest block of lost habitat.

These habitat areas were likely converted to agriculture early in the 20th century, similar to that described for the Imperial Valley (Imperial Irrigation District 2002). The lost habitat is not significant because of its small size relative to the entire range and because this area has been lost to agriculture for nearly a century and the flat-tailed horned lizard has persisted. Since the early 20th century, the species has persisted on East Mesa and West Mesa, and in the Yuha Basin over many generations. Flat-tailed horned lizards rarely live more than 4 years in the wild and can reproduce in their first or second year (FTHL–ICC 2003). If the median generation time is 2 years, then more than 25 generations of flat-tailed horned lizards have come and gone since most of the habitat conversion to agriculture production took place. This continued persistence over a span of nearly 100 years is a strong indication that the species will continue to persist into the foreseeable future despite the loss of historical habitat.

We do not expect additional conversion of flat-tailed horned lizard habitat to agriculture in the future in the Imperial Valley and elsewhere along the Colorado River given the existing limitations on the availability of water for irrigation (Imperial Irrigation District 2002). In fact, a recent water transfer agreement with San Diego required some fields to remain fallow (unirrigated); therefore, agricultural use may even decrease in this area (Imperial Irrigation District 2006).

Though the lost habitat is situated between the Arizona-Sonora and California-Baja California Norte populations, the Colorado River already isolated these populations to some degree. The lost habitat of the flat-tailed horned lizard in the United States and Mexico is not viable for flat-tailed horned lizards in the foreseeable future. Much of this habitat has been permanently lost due to urbanization and/or flooding of the Salton Sea. Habitat lost due to agricultural uses may be restored in certain cases in the future, though most agricultural fields are isolated from existing flat-tailed horned lizard populations by irrigation canals like the Coachella Canal, Highline Canal, and All-American Canal. We do not anticipate any significant amount of previously lost habitat could become viable habitat in the future.

In sum, we believe the lost habitat does not represent a significant portion of the range of the flat-tailed horned lizard because the lost habitat was lost decades ago and the species has persisted. Most of the lost habitat was lost early in the century and that lost habitat was not significant enough to lead to the species' extirpation within intact habitat through edge effects or fragmentation. There were no attributes or specific uses of the lost habitat by flat-tailed horned lizards that made it any more significant than any other habitat. For example, a significant part of a range for a species might be a breeding ground or lek site, but there is nothing of the sort for flat-tailed horned lizards. Additionally, as discussed in detail in the January 3, 2003, withdrawal of the proposed listing rule (68 FR 331), the available data concerning population abundance, trends, and threats do not suggest, outside the Coachella Valley, that flat-tailed horned lizard populations are declining in any of the geographic areas, or that because of this habitat loss and degradation the species is likely to become endangered within the foreseeable future throughout all or a significant portion of its range. Recent estimates of population sizes have been conducted in the West Mesa, Yuha Basin, East Mesa, and the Yuma Desert Management Areas and Ocotillo Wells Research Area since the January 3, 2003, withdrawal of the proposed listing rule (Young et al. 2004; Hollenbeck, Environmental Scientist, California Department of Parks and Recreation, pers. comm. 2005; Grant 2005). Overall, no large decline in population size occurred between 2003 and 2005 in areas for which we have more than one year of data (Grant 2005, Hollenbeck, Environmental Scientist, California Department of Parks and Recreation, pers. comm. 2005).

Finding

On January 3, 2003 (68 FR 331), the Service issued a decision to withdraw the proposal to list the flat-tailed horned lizard. The Tucson Herpetological Society and other environmental organizations and individuals filed a lawsuit to challenge our decision. The U.S. District Court for the District of Arizona upheld our decision with the exception that we had failed to consider whether the lost historical range of the flat-tailed horned lizard constituted a significant portion of the range. This notice addresses this issue.

We reviewed the best scientific and commercial data available and determined that the lost habitat is not a significant portion of the species range, and does not render the species likely to become endangered within the foreseeable future throughout all or a significant portion of its range. We conclude that the lost habitat is not significant because the species has persisted despite a large amount of habitat loss in the early 20th century, the species remains viable throughout most of its current extant range, and there were no particular attributes of the lost habitat that made it any more significant than any other part of the range. Therefore, based on the above reasoning and the reasoning presented in the January 3, 2003 withdrawal of the proposed rule to list the flat-tailed horned lizard (68 FR 331), we have determined that the flat-tailed horned lizard is not likely to become in danger of extinction in the foreseeable future throughout all or a significant portion of its range.

References Cited

A complete list of all references cited is available at the Carlsbad Fish and Wildlife Office (see **ADDRESSES** above).

Author

The primary author of this document is the Carlsbad Fish and Wildlife Office (see **ADDRESSES** above).

Authority

The authority for this action is section 4(b)(6)(B)(ii) of the Endangered Species Act of 1973, as amended (16 U.S.C. 1531 *et seq.*).

Dated: June 20, 2006.

Marshall Jones, Jr.,

Acting Director, U.S. Fish and Wildlife Service.

[FR Doc. E6–10138 Filed 6–27–06; 8:45 am]

BILLING CODE 4310–55–P

Notices

Federal Register

Vol. 71, No. 124

Wednesday, June 28, 2006

This section of the FEDERAL REGISTER contains documents other than rules or proposed rules that are applicable to the public. Notices of hearings and investigations, committee meetings, agency decisions and rulings, delegations of authority, filing of petitions and applications and agency statements of organization and functions are examples of documents appearing in this section.

DEPARTMENT OF AGRICULTURE

Agricultural Marketing Service

[Docket Number FV–06–311]

United States Standards for Grades of Cultivated Ginseng

AGENCY: Agricultural Marketing Service, USDA.

ACTION: Notice.

SUMMARY: The Agricultural Marketing Service (AMS), of the Department of Agriculture (USDA), is soliciting comments on the proposed voluntary United States Standards for Grades of Cultivated Ginseng. AMS received a request from the Ginseng Board of Wisconsin (GBW), to develop the standards. The proposed standards would provide a common language for trade and a means of measuring value in the marketing of cultivated ginseng, thus promoting orderly and efficient marketing of ginseng.

DATES: Comments must be received by August 28, 2006.

ADDRESSES: Interested persons are invited to submit written comments to the Standardization Section, Fresh Products Branch, Fruit and Vegetable Programs, Agricultural Marketing Service, U.S. Department of Agriculture, 1400 Independence Ave., SW., Room 1661 South Building, Stop 0240, Washington, DC 20250–0240; Fax (202) 720–8871, e-mail *FPB.DocketClerk@usda.gov.* Comments should make reference to the dates and page number of this issue of the **Federal Register** and will be made available for public inspection in the above office during regular business hours.

The proposed United States Standards for Grades of Cultivated Ginseng are available either from the above address or by accessing the AMS, Fresh Products Branch Web site at: *http://www.ams.usda.gov/fv/fpbdocketlist.htm.*

FOR FURTHER INFORMATION CONTACT: Cheri L. Emery, at the above address or call (202) 720–2185, E-mail *Cheri.Emery@usda.gov.*

SUPPLEMENTARY INFORMATION: Section 203(c) of the Agricultural Marketing Act of 1946 (7 U.S.C. 1621–1627), as amended, directs and authorizes the Secretary of Agriculture ''to develop and improve standards of quality, condition, quantity, grade and packaging and recommend and demonstrate such standards in order to encourage uniformity and consistency in commercial practices.'' AMS is committed to carrying out this authority in a manner that facilitates the marketing of agricultural commodities and makes copies of official standards available upon request. The United States Standards for Grades of Fruits and Vegetables not connected with Federal Marketing Orders or U.S. Import Requirements, no longer appear in the Code of Federal Regulations, but are maintained by USDA, AMS, Fruit and Vegetable Programs.

AMS is proposing to establish the voluntary United States Standards for Grades of Cultivated Ginseng using procedures that appear in Part 36, Title 7 of the Code of Federal Regulations (7 CFR part 36).

Background

AMS received a request from the GBW to develop United States Standards for Grades of Cultivated Ginseng. The GBW represents shippers, processors and all the cultivated ginseng growers in Wisconsin. AMS met with members of the GBW on a number of occasions to develop the proposed U.S. Standards for Grades of Cultivated Ginseng. The proposal would establish the following grades, as well as a range of numerical values for each grade: U.S. Premium, U.S. Select, U.S. Medium and U.S. Standard. In addition, proposed basic requirements for all grades, size, sample size, color, wrinkle and a definitions section would be established. The proposal will provide a common language for trade and a means of measuring value in the marketing of cultivated ginseng.

The official grade of a lot of cultivated ginseng covered by the standards will be determined by the procedures set forth in the Regulations Governing Inspection, Certification, and Standards of Fresh Fruits, Vegetables, and Other Products (7 CFR 51.1 to 51.61).

This notice provides for a 60-day comment period for interested parties to comment on changes to the standards.

Authority: 7 U.S.C. 1621–1627.

Dated: June 23, 2006.

Lloyd C. Day,

Administrator, Agricultural Marketing Service.

[FR Doc. 06–5851 Filed 6–27–06; 8:45 am]

BILLING CODE 3410–02–P

DEPARTMENT OF AGRICULTURE

Rural Housing Service

Notice of Request for Extension of a Currently Approved Information Collection

AGENCY: Rural Housing Service, Rural Development, USDA.

ACTION: Proposed collection; comments requested.

SUMMARY: In accordance with the Paperwork Reduction Act of 1995, this notice announces the Rural Housing Service's intention to request an extension for a currently approved information collection in support of the program for rural housing loans.

DATES: *Effective Date:* Comments on this notice must be received by August 28, 2006 to be assured of consideration.

FOR FURTHER INFORMATION CONTACT: Debra A. Terrell, Senior Loan Specialist, Single Family Housing Guaranteed Loan Division, Rural Development, United States Department of Agriculture, Mail Stop 0784, 1400 Independence Ave., SW., Washington, DC 20250–0784, Telephone (202) 720–0099 or (918) 534–3254, E-mail *debra.terrell@wdc.usda.gov.*

SUPPLEMENTARY INFORMATION:

Title: 7 CFR 1980–D, Rural Housing Loans.

OMB Number: 0575–0078.

Expiration Date of Approval: December 31, 2006.

Type of Request: Extension of a currently approved information collection.

Overview

The Rural Housing Service (RHS) is authorized under section 517(d) of Title V of the Housing Act of 1949, as amended, to issue loan guarantees for

the acquisition of new or existing dwellings and related facilities to provide decent, safe, and sanitary living conditions and other structures in rural areas by eligible recipients.

The Act also authorizes the Secretary to pay the holder of a guaranteed loan the difference between the rate of interest paid by the borrower and the market rate of interest.

The purpose of the program is to assist low and moderate income individuals and families acquire or construct a single family residence in a rural area with loans made by private lenders. Eligibility for this program includes low- and moderate-income families or persons whose income does not exceed 115 percent of the median income for the area, as determined by the Secretary.

The Single Family Housing Guaranteed Loan Program (SFHGLP) was authorized under the Cranston-Gonzalez National Affordable Housing Act and the Agency issued a final rule implementing the SFHGLP on April 17, 1991, before departmental reorganization. The program began as a pilot program in 20 States on May 17, 1991. In 1992, the SFHGLP was offered on a nationwide basis. During the implementation process, the Agency looked for ways to improve the program and make it more user friendly.

The Agency recognized the need to make its program even more compatible with the existing structure of the mortgage lending community. On May 22, 1995, the Agency published the final rule incorporating the needed changes to encourage greater participation by lenders and the secondary market for mortgage loans.

The information requested by the Agency includes borrower financial information such as household income, assets and liabilities, and monthly expenses. All information collected is vital for the Agency to determine if borrowers qualify for and assure they receive all assistance for which they are eligible. Information requested on lenders is required to ensure lenders are eligible to participate in the SFHGLP. Lender requirements are in compliance with OMB Circular A–129.

Estimate of Burden: Public reporting burden for this collection of information is estimated to average .44 hours per response.

Respondents: Individuals or households and business or other for-profits.

Estimated Number of Respondents: 27,650.

Estimated Number of Responses per Respondent: 10.82.

Estimated Number of Responses: 299,120.

Estimated Total Annual Burden on Respondents: 132,263 hours.

Copies of this information collection can be obtained from Renita Bolden, Management Analyst, Regulations and Paperwork Management Branch, at (202) 692–0035.

Comments

Comments are invited on: (a) Whether the proposed collection of information is necessary for the proper performance of the functions of HCFP, including whether the information will have practical utility; (b) the accuracy of RHS's estimate of the burden of the proposed collection of information including the validity of the methodology and assumptions used; (c) ways to enhance the quality, utility and clarity of the information to be collected; and (d) ways to minimize the burden of the collection of information on those who are to respond, including through the use of appropriate automated, electronic, mechanical, or other technological collection techniques or other forms of information technology. Comments may be sent to Renita Bolden, Management Analyst, Regulations and Paperwork Management Branch, U.S. Department of Agriculture, Rural Development, STOP 0742, 1400 Independence Ave., SW., Washington, DC 20250. All responses to this notice will be summarized and included in the request for OMB approval. All comments will also become a matter of public record.

Dated: June 21, 2006.

Russell T. Davis,

Administrator, Rural Housing Service.

[FR Doc. E6–10147 Filed 6–27–06; 8:45 am]

BILLING CODE 3410–XV–P

COMMISSION ON CIVIL RIGHTS

Notice of Sunshine Act Meeting

AGENCY: U.S. Commission on Civil Rights.

DATE AND TIME: Wednesday, July 5, 2006, 12 p.m.

PLACE: U.S. Commission on Civil Rights, 624 9th Street, NW., Washington, DC 20425. Via Teleconference, Public Call-In number: 1–800–347–3350, Access Code Number: 50835285, Federal Relay Service: 1–800–877–8339.

STATUS:

Agenda

I. Approval of Agenda.
II. Approval of Minutes of May 4, May 5, and June 16, 2006 Meetings.
III. Announcements.
IV. Staff Director's Report.
V. Program Planning.
- FY 2008 Statutory Report on Religious Discrimination and Prisoner Rights.
- Schedule for Briefing on Magnet Schools and Racial Discrimination.
- Schedule for Briefing on Racially Identifiable School Districts in Omaha, NE.

VI. Management and Operations.
- Web site: Posting Addendum to Transcript of November 2005 Briefing on Campus Anti-Semitism.
- Proposed Information Quality Guidelines.
- Strategic Planning.

VII. State Advisory Committee Issues.
- Religious Discrimination and Prisoner Rights.
- Recharter Package for the North Carolina State Advisory Committee.

VIII. Future Agenda Items.

FOR FURTHER INFORMATION CONTACT: To ensure that the Commission secures an appropriate number of lines for the public, persons are asked to register by contacting Audrey Wright of the Office of the Staff Director at (202) 376–7700 or TTY (202) 376–8116, by noon (EST) on Monday, July 3, 2006.

Any interested member of the public may call the above call-in number and listen to the meeting. Callers will incur no charges for calls using the call-in number over land-line connections. Persons with hearing impairments may also follow the proceedings by first calling the Federal Relay Service and providing the Service with the conference call-in number and access code.

Kenneth L. Marcus,

Staff Director, Acting General Counsel.

[FR Doc. 06–5784 Filed 6–23–06; 4:10 pm]

BILLING CODE 6335–01–M

DEPARTMENT OF COMMERCE

Submission for OMB Review; Comment Request

The Department of Commerce has submitted to the Office of Management and Budget (OMB) for clearance the following proposal for collection of information under the provisions of the Paperwork Reduction Act (44 U.S.C. chapter 35).

Agency: National Oceanic and Atmospheric Administration (NOAA).

Title: NOAA Aviation Safety Program.

Form Number(s): None.

OMB Approval Number: None.

Type of Request: Regular submission.

Burden Hours: 250.

Number of Respondents: 1,000.

Average Hours Per Response: 15 minutes.

Needs and Uses: NOAA has a responsibility to provide a safe working environment for its workforce and partners who are exposed to the risks associated with flying on behalf of the Agency. NOAA's aviation safety policy requires all individuals who fly on aircraft owned or operated by NOAA for mission operations, and all NOAA personnel who fly on any aircraft for mission operations in the performance of their official duties to be medically screened to identify individuals that could be placed in a work environment (flight) with the potential to aggravated existing medical conditions. NOAA Office of Marine and Aviation Operations (OMAO) administers NOAA's aviation safety policy through the Aviation Safety Program. OMAO requests medical history information from individuals (researchers or NOAA Program activity observers) requesting clearance to fly on behalf of NOAA to determine the individual's fitness for flight. This information, upon receipt, is reviewed by the NOAA Aviation Medical Examiner to determine whether or not to grant a NOAA Aeromedical Clearance Notice, receipt of which, authorizes participation in flight activities on behalf of NOAA.

Affected Public: Not-for-profit institutions; State, local or tribal government; Federal Government; individuals or households; business or other for-profit organizations.

Frequency: On occasion.

Respondent's Obligation: Required to obtain or retain benefits.

OMB Desk Officer: David Rostker, (202) 395–3897.

Copies of the above information collection proposal can be obtained by calling or writing Diana Hynek, Departmental Paperwork Clearance Officer, (202) 482–0266, Department of Commerce, Room 6625, 14th and Constitution Avenue, NW., Washington, DC 20230 (or via the Internet at *dHynek@doc.gov*).

Written comments and recommendations for the proposed information collection should be sent within 30 days of publication of this notice to David Rostker, OMB Desk Officer, FAX number (202) 395–7285, or *David_Rostker@omb.eop.gov.*

Dated: June 22, 2006.

Gwellnar Banks,

Management Analyst, Office of the Chief Information Officer.

[FR Doc. E6–10142 Filed 6–27–06; 8:45 am]

BILLING CODE 3510–22–P

DEPARTMENT OF COMMERCE

Submission for OMB Review; Comment Request

The Department of Commerce has submitted to the Office of Management and Budget (OMB) for clearance the following proposal for collection of information under the provisions of the Paperwork Reduction Act (44 U.S.C. chapter 35).

Agency: National Oceanic and Atmospheric Administration (NOAA).

Title: Paperwork Submissions Under the Coastal Zone Management Act Federal Consistency Requirements.

Form Number(s): None.

OMB Approval Number: 0648–0411.

Type of Request: Regular submission.

Burden Hours: 35,799.

Number of Respondents: 2,334.

Average Hours per Response: Consistency certifications or determinations and state responses to them, 8 hours; applications for Federal assistance and state responses, 2 hours; state requests for review of unlisted activities, 4 hours; public notice requirements, 1 hour; requests for remedial action or supplemental review, 6 hours; listing notice, 1 hour; interstate listing, 30 hours; requests for mediation, 2 hours; appeals, 210 hours.

Needs and Uses: These paperwork submissions are required by the Coastal Zone Management Act (CZMA), 16 U.S.C. 1456, and by NOAA to provide a reasonable, efficient and predictable means of complying with the CZMA requirements. The information will be used by coastal States with federally-approved Coastal Zone Management Programs to determine if Federal agency activities, Federal license or permit activities, and Federal assistance activities that affect a State's coastal zone are consistent with the States' programs.

Affected Public: State, local or tribal government; individuals or households; business or for-profit organizations.

Frequency: On occasion.

Respondent's Obligation: Required to obtain or retain benefits.

OMB Desk Officer: David Rostker, (202) 395–3897.

Copies of the above information collection proposal can be obtained by calling or writing Diana Hynek, Departmental Paperwork Clearance Officer, (202) 482–0266, Department of Commerce, Room 6625, 14th and Constitution Avenue, NW., Washington, DC 20230 (or via the Internet at *dHynek@doc.gov*).

Written comments and recommendations for the proposed information collection should be sent within 30 days of publication of this notice to David Rostker, OMB Desk Officer, FAX number (202) 395–7285, or *David_Rostker@omb.eop.gov.*

Dated: June 22, 2006.

Gwellnar Banks,

Management Analyst, Office of the Chief Information Officer.

[FR Doc. E6–10143 Filed 6–27–06; 8:45 am]

BILLING CODE 3510–22–P

DEPARTMENT OF COMMERCE

Submission for OMB Review; Comment Request

DOC has submitted to the Office of Management and Budget (OMB) for clearance the following proposal for collection of information under the provisions of the Paperwork Reduction Act (44 U.S.C. chapter 35).

Agency: U.S. Census Bureau.

Title: Monthly Survey of Residential Alterations and Repairs.

Form Number(s): SORAR–705.

Agency Approval Number: 0607–0130.

Type of Request: Extension of a currently approved collection.

Burden: 5,100.

Number of Respondents: 1,700.

Avg Hours per Response: 15 minutes.

Needs and Uses: The U.S. Census Bureau requests an extension of the currently approved collection for the Monthly Survey of Residential Alterations and Repairs. The Census Bureau is responsible for preparing estimates of the expenditures for residential improvement and repairs. This segment of the construction industry amounted to more than $198 billion in 2004. While the majority of the data are gathered from the Consumer Expenditure Survey (OMB number 1220–0050), a portion of the data ($55 billion in 2004) are collected on the SORAR–705 form. This survey is mailed to a sample of owners of rental or vacant residential properties. Since residential improvement and repairs are a large and growing economic sector, any measure of the construction industry would be incomplete without the inclusion of these data.

The Census Bureau uses the information collected on Form SORAR–705 to publish improvement and repair expenditures for rental and vacant residential properties. Data on improvements and repairs to owner-occupied properties are collected in the Consumer Expenditure Survey. Combined published estimates are used by a variety of private businesses and trade associations for marketing studies, economic forecasts and assessments of

the construction industry. They also provide all levels of Government with a tool to evaluate economic policy and measure progress toward established goals. For example, the Bureau of Economic Analysis (BEA) uses the Census Bureau's improvement statistics to develop the residential structures component of the gross private domestic investment in the national income and product accounts.

Affected Public: Individuals or households; Businesses or other for-profit.

Frequency: Monthly.

Respondent's Obligation: Voluntary.

Legal Authority: Title 13 U.S.C. 182.

OMB Desk Officer: Susan Schechter, (202) 395–5103.

Copies of the above information collection proposal can be obtained by calling or writing Diana Hynek, Departmental Paperwork Clearance Officer, (202) 482–0266, Department of Commerce, Room 6625, 14th and Constitution Avenue, NW., Washington, DC 20230 (or via the Internet at *dhynek@doc.gov*).

Written comments and recommendations for the proposed information collection should be sent within 30 days of publication of this notice to Susan Schechter, OMB Desk Officer either by fax (202–395–7245) or e-mail (*susan_schechter@omb.eop.gov*).

Dated: June 22, 2006,

Madeleine Clayton,

Management Analyst, Office of the Chief Information Officer.

[FR Doc. E6–10144 Filed 6–27–06; 8:45 am]

BILLING CODE 3510–07–P

DEPARTMENT OF COMMERCE

Census Bureau

2007 Economic Census of the Island Areas

ACTION: Proposed collection; comment request.

SUMMARY: The Department of Commerce, as part of its continuing effort to reduce paperwork and respondent burden, invites the general public and other Federal agencies to take this opportunity to comment on proposed and/or continuing information collections, as required by the Paperwork Reduction Act of 1995, Public Law 104–13 (44 U.S.C. 3506(c)(2)(A)).

DATES: Written comments must be submitted on or before August 28, 2006.

ADDRESSES: Direct all written comments to Diana Hynek, Departmental Paperwork Clearance Officer, Department of Commerce, Room 6625, 14th and Constitution Avenue, NW., Washington, DC 20230 (or via the Internet at *DHynek@doc.gov*).

FOR FURTHER INFORMATION CONTACT: Requests for additional information or copies of the information collection instrument(s) and instructions should be directed to Lee R. Wentela, U.S. Census Bureau, Room 1183, Building 3, Washington, DC 20233–6400 (301–763–7270 or via the Internet at *lee.r.wentela@census.gov*).

SUPPLEMENTARY INFORMATION:

I. Abstract

The economic census, conducted under authority of Title 13, United States Code (U.S.C.), is the primary source of facts about the structure and functioning of the United States economy, including Puerto Rico, Guam, the Northern Mariana Islands, the U.S. Virgin Islands, and American Samoa. The economic census, is the primary source of dependable facts about each of the island areas' economies, and features the only recognized source of data at a geographic level equivalent to U.S. counties. Economic census statistics for the island areas serve to benchmark estimates of local net income and gross product, and provide essential information for government (Federal and local), business, and the general public. Economic data are the Census Bureau's primary program commitment during nondecennial census years. The 2007 Economic Census of the Island Areas will cover the following sectors (as defined by the North American Industry Classification System (NAICS)): Mining, Utilities, Construction, Manufacturing; Wholesale and Retail Trades, Transportation and Warehousing, Information; Finance and Insurance; Real Estate and Rental and Leasing; Professional, Scientific, and Technical Services; Management of Companies and Enterprises; Administrative and Support, Waste Management and Remediation Services, Educational Services; Health Care and Social Assistance; Arts, Entertainment, and Recreation; Accommodation and Food Services, and Other Services (except Public Administration). This scope is equivalent to that of the stateside economic census. The information collected will produce basic statistics by kind of business on the number of establishments, sales/shipments/receipts/revenue, payroll, and employment. It will also yield a variety of industry-specific statistics, including sales/receipts by commodity/merchandise/receipt line, sales/shipments by class of customer, inventories, and number of hotel rooms. Primary strategies for reducing burden in Census Bureau economic data collections are to increase reporting through standardized questionnaires and broader electronic data collection methods.

II. Method of Collection

The 2007 Economic Census of the Island Areas will be conducted using mailout/mailback procedures. Establishments will be selected from the Census Bureau's Business Register. An establishment will be included in the 2007 Economic Census of Island Areas if: (a) It is engaged in any of the sectors within the scope of the census listed above; (b) it is an active operating establishment with payroll; and (c) it is located in Puerto Rico, Guam, the Northern Mariana Islands, the U.S. Virgin Islands, or American Samoa. Generally, non-employer establishments are excluded from the Economic Census of the Island Areas. However, non-employer establishments are included in the data collection in American Samoa due to the unique structure of the economy for this area as well as the lack of economic statistics. The data for non-employer establishments in American Samoa will be collected through an enumeration conducted by employees of the government of American Samoa. This enumeration will follow guidelines provided by the Census Bureau, which will include the requirement that all staff are sworn to uphold all confidentiality requirements of Title 13, U.S.C.

III. Data

OMB Number: Not available.

Form Number: The forms used to collect information in Puerto Rico are tailored to specific industries or groups of industries. Puerto Rico forms are available in English as well as Spanish. Only one form, covering all economic activity within the scope of the census, is used for each of the remaining areas. The forms are too numerous to list individually in this notice. The contact named above can provide interested parties with complete information on the forms to be included in this information collection.

Type of Review: Regular review.

Affected Public: Local governments, businesses, or other for profit or nonprofit institutions or organizations.

Estimated Number of Respondents: Puerto Rico 50,000; Guam 3,250; Northern Mariana Islands 1,500; U.S. Virgin Islands 3,000; American Samoa 1,250 (includes non-employers); Total 59,000.

Estimated Time per Response: Puerto Rico 1 hour; Guam 30 minutes; Northern Mariana Islands 30 minutes; U.S. Virgin Islands 30 minutes; American Samoa 30 minutes.

Estimated Total Annual Burden Hours: 54,500.

Estimated Total Annual Cost: $1,344,515.

Respondent's Obligation: Mandatory.

Legal Authority: Title 13, U.S.C. 131 and 224.

IV. Request for Comments

Comments are invited on: (a) Whether the proposed collection of information is necessary for the proper performance of the functions of the agency, including whether the information shall have practical utility; (b) the accuracy of the agency's estimate of the burden (including hours and cost) of the proposed collection of information; (c) ways to enhance the quality, utility, and clarity of the information to be collected; and (d) ways to minimize the burden of the collection of information on respondents, including through the use of automated collection techniques or other forms of information technology.

Comments submitted in response to this notice will be summarized and/or included in the request for OMB approval of this information collection; they also will become a matter of public record.

Dated: June 22, 2006.

Madeleine Clayton,

Management Analyst, Office of the Chief Information Officer.

[FR Doc. E6–10145 Filed 6–27–06; 8:45 am]

BILLING CODE 3510–07–P

DEPARTMENT OF DEFENSE

Office of the Secretary

[No. DOD–2006–OS–0151]

Proposed Collection; Comment Request

AGENCY: Defense Finance and Accounting Service, DoD.

ACTION: Notice.

SUMMARY: In compliance with Section 3506(c)(2)(A) of the Paperwork Reduction Act of 1995, the Defense Finance and Accounting Service announces the proposed extension of public information collection and seeks public comment on the provisions thereof. Comments are invited on: (a) Whether the proposed collection of information is necessary for the proper performance of the functions of the agency, including whether the information shall have practical utility; (b) the accuracy of the agency's estimate of the burden of the proposed information collection; (c) ways to enhance the quality, utility and clarity of the information to be collected; and (d) ways to minimize the burden of the information collection on respondents, including through the use of automated collection techniques or other forms of information technology.

DATES: Consideration will given to all comments received by August 28, 2006.

ADDRESSES: You may submit comments, identified by docket number and title, by any of the following methods:

- *Federal eRulemaking Portal: http://www.regulations.gov.* Follow the instructions for submitting comments.
- *Mail:* Federal Docket Management System Office, 1160 Defense Pentagon, Washington, DC 20301–1160.

Instructions: All submissions received must include the agency name, docket number and title for this **Federal Register** document. The general policy for comments and other submissions from members of the public is to make these submissions available for public viewing on the Internet at *http://www.regulations.gov* as they are received without change, including any personal identifiers or contact information.

FOR FURTHER INFORMATION CONTACT: To request more information on this proposed information collection or to obtain a copy of the proposal and associated collection instruments, please write to the Defense Finance and Accounting Service—Cleveland, DFAS–CGA, ATTN: Mr. Charles Moss, 1240 East Ninth Street, Room 2323, Cleveland, OH 44199, or call 216–204–4426.

Title, Associated Form, and OMB Number: Trustee Report; DD Form 2826; OMB License 0730–0012.

Needs and Uses: This form is used to report on the administration of the funds received on behalf of a mentally incompetent member of the uniformed services pursuant to 37 U.S.C. 602–604.

Affected Public: Individuals or households.

Annual Burden Hours: 300 hours.

Number of Respondents: 600.

Responses per Respondent: 1.

Average Burden per Response: 30 minutes.

Frequency: On occasion.

SUPPLEMENTARY INFORMATION:

Summary of Information Collection

When member of the uniformed services are declared mentally incompetent, the need arises to have a trustee appointed to act on their behalf with regard to military pay matters. Trustees will complete this form to report the administration of the funds received on behalf of the member. The requirement to complete this form helps alleviate the opportunity for fraud, waste and abuse of Government funds and member's benefits.

Dated: June 20, 2006.

Patricia L. Toppings,

Alternate OSD Federal Register Liaison Officer, Department of Defense.

[FR Doc. 06–5726 Filed 6–27–06; 8:45 am]

BILLING CODE 5001–06–M

DEPARTMENT OF DEFENSE

Office of the Secretary

[No. DoD–2006–OS–0152]

Proposed Collection; Comment Request

AGENCY: Defense Finance and Accounting Service, DoD.

ACTION: Notice.

SUMMARY: In compliance with Section 3506(c)(2)(A) of the Paperwork Reduction Act of 1995, the Defense Finance and Accounting Service announces the proposed extension of a public information collection and seeks public comment on the provisions thereof. Comments are invited on: (a) Whether the proposed collection of information is necessary for the proper performance of the functions of the agency, including whether the information shall have practical utility; (b) the accuracy of the agency's estimate of the burden of the proposed information collection; (c) ways to enhance the quality, utility and clarity of the information to be collected; and (d) ways to minimize the burden of the information collection on respondents, including through the use of automated collection techniques or other forms of information technology.

DATES: Consideration will be given to all comments received by August 28, 2006.

ADDRESSES: You may submit comments, identified by docket number and title, by any of the following methods:

- *Federal eRulemaking Portal: http://www.regulations.gov.* Follow the instructions for submitting comments.
- *Mail:* Federal Docket Management System Office, 1160 Defense Pentagon, Washington, DC 20301–1160.

Instructions: All submissions received must include the agency name, docket number and title for this **Federal Register** document. The general policy for comments and other submissions

from members of the public is to make these submissions available for public viewing on the Internet at *http://www.regulations.gov* as they are receive without change, including any personal identifiers or contact information.

FOR FURTHER INFORMATION CONTACT: To request more information on this proposed information collection or to obtain a copy of the proposal and associated collection instruments, please write to the Defense Finance and Accounting Service—Cleveland, DFAS–CGA, ATTN: Mr. Charles Moss, 1240 East Ninth Street, Room 2323, Cleveland, OH 44199, or call 216–204–4426.

Title, Associated Form, and OMB Number: Application for Trusteeship; DD Form 2827; OMB License 0730–0013.

Needs and Uses: This form is used to report on the administration of the funds received on behalf of a mentally incompetent member of the uniformed services pursuant to 37 U.S.C. 602–604.

Affected Public: Individuals or households.

Annual Burden Hours: 18.75 hours.

Number of respondents: 75.

Responses per Respondent: 1.

Average Burden per Response: 15 minutes.

Frequency: On occasion.

SUPPLEMENTARY INFORMATION:

Summary of Information Collection

When members of the uniformed services are declared mentally incompetent, the need arises to have a trustee appointed to act on their behalf with regard to military pay matters. Individuals will complete this form to apply for appointment as a trustee on behalf of the member. The requirement to complete this form helps alleviate the opportunity for fraud, waste and abuse of Government funds and member's benefits.

Dated: June 20, 2006.

Patricia L. Toppings,

Alternate OSD Federal Register Liaison Officer, Department of Defense.

[FR Doc. 06–5727 Filed 6–27–06; 8:45am]

BILLING CODE 5001–06–M

DEPARTMENT OF EDUCATION

Safe and Drug-Free Schools and Communities Advisory Committee

AGENCY: Office of Safe and Drug-Free Schools, Department of Education.

ACTION: Notice of open meeting.

SUMMARY: This notice sets forth the schedule and proposed agenda of an upcoming open meeting of The Safe and Drug-Free Schools and Communities Advisory Committee. The notice also describes the functions of the Committee. Notice of this meeting is required by section 10(a)(2) of the Federal Advisory Committee Act and is intended to notify the public of their opportunity to attend.

DATES: Monday, July 10, 2006.

Time: 2 p.m. Eastern Time.

ADDRESSES: The Committee will meet by telephone conference call.

FOR FURTHER INFORMATION CONTACT: Phyllis Scattergood, Designated Federal Officer: The Safe and Drug-Free Schools and Communities Advisory Committee, Room 3E212, 400 Maryland Avenue, SW., Washington, DC 20202; telephone: (202) 260–0504; e-mail: *OSDFSC@ed.gov.*

SUPPLEMENTARY INFORMATION: The Committee was established to provide advice to the Secretary on Federal, state and local programs designed to create safe and drug-free schools, and on issues related to crisis planning. The agenda for the July 10th meeting will include activities designed to prepare for an August 21–22, 2006 hearing to be conducted by the Advisory Committee. The activities will include developing an agenda for that hearing, as well as identifying possible participants. The August hearing will focus on issues related to the Safe and Drug-Free Schools and Communities Act State Grants program, as well the collection and use of data to effectively manage youth drug and violence prevention programs. The Safe and Drug-Free Schools and Communities Advisory Committee is giving less than 15 days notice due to scheduling difficulties.

There will not be an opportunity for public comment during this meeting; however, the public may listen to the conference call by calling 866–215–1938, Chairperson: Deborah Price. Individuals who will need accommodations for a disability in order to listen to the meeting may access a TDD line by calling 800–877–8973, Chairperson: Deborah Price.

Request for Written Comments: We invite the public to submit written comments relevant to the overall focus and deliberations of the Advisory Committee. We would like to receive written comments from members of the public no later than April 30, 2007.

ADDRESSES: Submit all comments to the Advisory Committee using one of the following methods: 1. Internet. We encourage the public to submit comments through the Internet to the following address: *OSDFSC@ed.gov.* 2. Mail. The public may also submit your comments via mail to Phyllis Scattergood, Office of Safe and Drug Free Schools, U.S. Department of Education, 400 Maryland Avenue, SW., Room 3E212, Washington, DC 20202. Due to delays in mail delivery caused by heightened security, please allow adequate time for the mail to be received.

Records are kept of all Committee proceedings and are available for public inspection at the staff office for the Committee from the hours of 9 a.m. to 5 p.m.

Dated: June 23, 2006.

Raymond Simon,

Deputy Secretary, U.S. Department of Education.

[FR Doc. 06–5759 Filed 6–27–06; 8:45 am]

BILLING CODE 4000–01–M

DEPARTMENT OF EDUCATION

William D. Ford Federal Direct Loan Program

AGENCY: Federal Student Aid, Department of Education.

ACTION: Notice of the annual updates to the Income Contingent Repayment (ICR) plan formula for 2006.

SUMMARY: The Secretary announces the annual updates to the ICR plan formula for 2006. Under the William D. Ford Federal Direct Loan (Direct Loan) Program, borrowers may choose to repay their student loans (Direct Subsidized Loan, Direct Unsubsidized Loan, and Direct Consolidation Loan) under the ICR plan, which bases the repayment amount on the borrower's income, family size, loan amount, and interest rate. Each year, we adjust the formula for calculating a borrower's payment to reflect changes due to inflation. This notice contains the adjusted income percentage factors for 2006 and charts showing sample repayment amounts based on the adjusted ICR plan formula. It also contains examples of how the calculation of the monthly ICR amount is performed and a constant multiplier chart for use in performing the calculations. The adjustments for the ICR plan formula contained in this notice are effective from July 1, 2006 to June 30, 2007.

FOR FURTHER INFORMATION CONTACT: Don Watson, U.S. Department of Education, room 114I2, UCP, 400 Maryland Avenue, SW., Washington, DC 20202–5400. Telephone: (202) 377–4008.

If you use a telecommunications device for the deaf (TDD), you may call the Federal Relay Service (FRS) at 1–800–877–8339.

Individuals with disabilities may obtain this document in an alternative format (*e.g.*, Braille, large print, audiotape, or computer diskette) on request to the contact person listed under **FOR FURTHER INFORMATION CONTACT**.

SUPPLEMENTARY INFORMATION: Direct Loan Program borrowers may choose to repay their Direct Subsidized Loan, Direct Unsubsidized Loan, and Direct Consolidation Loan under the ICR plan. The attachment to this notice provides updates to examples of how the calculation of the monthly ICR amount is performed, the income percentage factors, the constant multiplier chart, and charts showing sample repayment amounts.

We have updated the income percentage factors to reflect changes based on inflation. We have revised the table of income percentage factors by changing the dollar amounts of the incomes shown by a percentage equal to the estimated percentage change in the Consumer Price Index for all urban consumers from December 2005 to December 2006. Further, we provide examples of monthly repayment amount calculations and two charts that show sample repayment amounts for single and married or head-of-household borrowers at various income and debt levels based on the updated income percentage factors.

The updated income percentage factors, at any given income, may cause a borrower's payments to be slightly lower than they were in prior years. This updated amount more accurately reflects the impact of inflation on a borrower's current ability to repay.

Electronic Access to This Document

You may review this document, as well as all other documents of this Department published in the **Federal Register**, in text or Adobe Portable Document Format (PDF) on the Internet at the following site: *http://www.ed.gov/news/federegister*.

To use PDF you must have Adobe Acrobat Reader, which is available free at this site. If you have questions about using PDF, call the U.S. Government Printing Office (GPO), toll free at 1–888–293–6498; or in the Washington, DC area at (202) 512–1530.

Note: The official version of this document is the document published in the **Federal Register**. Free Internet access to the official edition of the **Federal Register** and the Code of Federal Regulations is available on GPO Access at: *http://www.gpoaccess.gov/nara/index.html*.

Program Authority: 20 U.S.C. 1087 *et seq.*

Dated: June 23, 2006.

Theresa S. Shaw,

Chief Operating Officer, Federal Student Aid.

Attachment—Examples of the Calculations of Monthly Repayment Amounts

Example 1. This example assumes you are a single borrower with $15,000 in Direct Loans, the interest rate being charged is 6.80 percent, and you have an adjusted gross income (AGI) of $35,260. (The 6.80 percent interest rate used in this example is a fixed interest rate that is charged on all Direct Loans, excluding Direct PLUS Loans and certain Direct PLUS Consolidation Loans, disbursed on or after July 1, 2006; your actual interest rate may be less than or greater than 6.80 percent.)

Step 1: Determine your annual payments based on what you would pay over 12 years using standard amortization. To do this, multiply your loan balance by the constant multiplier for 6.80 percent interest (0.122130). The constant multiplier is a factor used to calculate amortized payments at a given interest rate over a fixed period of time. You can view the constant multiplier chart at the end of this notice to determine the constant multiplier that you should use for the interest rate on your loan. If your exact interest rate is not listed, use the next highest rate for estimation purposes.

- 0.122130 × $15,000 = $1,831.95.

Step 2: Multiply the result of Step 1 by the income percentage factor shown in the income percentage factors table that corresponds to your income and then divide the result by 100 (if your income is not listed in the income percentage factors table, calculate the applicable income percentage factor by following the instructions under the ''Interpolation'' heading later in this notice):

- 88.77 × $1,831.95 ÷ 100 = $1,626.22.

Step 3: Determine 20 percent of your discretionary income (your discretionary income is your AGI minus the U.S. Department of Health and Human Services (HHS) Poverty Guideline amount for your family size). Because you are a single borrower, subtract the poverty level for a family of one, as published in the **Federal Register** on January 24, 2006 (71 FR 3848), from your AGI and multiply the result by 20 percent:

- $35,260 − $9,800 = $25,460.
- $25,460 × 0.20 = $5,092.00.

Step 4: Compare the amount from Step 2 with the amount from Step 3. The lower of the two will be your annual payment amount. In this example, you will be paying the amount calculated under Step 2. To determine your monthly repayment amount, divide the annual amount by 12.

- $1,626.22 ÷ 12 = $135.52.

Example 2. In this example, you are married. You and your spouse have a combined AGI of $66,631 and are repaying your loans jointly under the ICR plan. You have no children. You have a Direct Loan balance of $10,000, and your spouse has a Direct Loan balance of $15,000. Your interest rate is 6.80 percent. (The 6.80 percent interest rate used in this example is a fixed interest rate that is charged on all Direct Loans, excluding Direct PLUS Loans and certain Direct PLUS Consolidation Loans, disbursed on or after July 1, 2006; your actual interest rate may be less than or greater than 6.80 percent.)

Step 1: Add your and your spouse's Direct Loan balances together to determine your aggregate loan balance:

- $10,000 + $15,000 = $25,000.

Step 2: Determine the annual payment based on what you would pay over 12 years using standard amortization. To do this, multiply your loan balance by the constant multiplier for 6.80 percent interest (0.122130). You can view the constant multiplier chart at the end of this notice to determine the constant multiplier that you should use for the interest rate on your loan. If your exact interest rate is not listed, use the next highest rate for estimation purposes.

- 0.122130 × $25,000 = $3,053.25.

Step 3: Multiply the result of Step 2 by the income percentage factor shown in the income percentage factors table that corresponds to your and your spouse's income and then divide the result by 100 (if your and your spouse's aggregate income is not listed in the income percentage factors table, calculate the applicable income percentage factor by following the instructions under the ''Interpolation'' heading later in this notice):

- 109.40 × $3,053.25 ÷ 100 = $3,340.26.

Step 4: Determine 20 percent of your discretionary income. To do this, subtract the poverty level for a family of two, as published in the **Federal Register** on January 24, 2006 (71 FR 3848), from your combined AGI and multiply the result by 20 percent:

- $66,631 − $13,200 = $53,431.00.
- $53,431.00 × 0.20 = $10,686.20.

Step 5: Compare the amount from Step 3 with the amount from Step 4. The lower of the two will be your annual payment amount. You and your spouse will pay the amount calculated under Step 3. To determine your

monthly repayment amount, divide the annual amount by 12.

- $3,340.26 ÷ 12 = $278.36.

Example 3. This example assumes you are a single borrower with $15,000 in Direct Loans, the interest rate being charged is 8.25 percent, and you have an adjusted gross income (AGI) of $28,071. (The 8.25 percent interest rate used in this example is the maximum interest rate that may be charged for all Direct Loans excluding Direct PLUS Loans and certain Direct PLUS Consolidation Loans that were disbursed before July 1, 2006; your actual interest rate may be lower.)

Step 1: Determine your annual payments based on what you would pay over 12 years using standard amortization. To do this, multiply your loan balance by the constant multiplier for 8.25 percent interest (0.131545). The constant multiplier is a factor used to calculate amortized payments at a given interest rate over a fixed period of time. You can view the constant multiplier chart at the end of this notice to determine the constant multiplier that you should use for the interest rate on your loan. If your exact interest rate is not listed, use the next highest rate for estimation purposes.

- 0.131545 × $15,000 = $1,973.18.

Step 2: Multiply the result of Step 1 by the income percentage factor shown in the income percentage factors table that corresponds to your income and then divide the result by 100 (if your income is not listed in the income percentage factors table, calculate the applicable income percentage factor by following the instructions under the ''Interpolation'' heading later in this notice):

- 80.33 × $1,973.18 ÷ 100 = $1,585.06.

Step 3: Determine 20 percent of your discretionary income (your discretionary income is your AGI minus the HHS Poverty Guideline amount for your family size). Because you are a single borrower, subtract the poverty level for a family of one, as published in the **Federal Register** on January 24, 2006 (71 FR 3848), from your AGI and multiply the result by 20 percent:

- $28,071 − $9,800 = $18,271.
- $18,271 × 0.20 = $3,654.20.

Step 4: Compare the amount from Step 2 with the amount from Step 3. The lower of the two will be your annual payment amount. In this example, you will be paying the amount calculated under Step 2. To determine your monthly repayment amount, divide the annual amount by 12.

- $1,585.06 ÷ 12 = $132.09.

Example 4. In this example, you are married. You and your spouse have a combined AGI of $53,185 and are repaying your loans jointly under the ICR plan. You have no children. You have a Direct Loan balance of $10,000, and your spouse has a Direct Loan balance of $15,000. Your interest rate is 8.25 percent. (The 8.25 percent interest rate used in this example is the maximum interest rate that may be charged for all Direct Loans excluding Direct PLUS Loans and certain Direct PLUS Consolidation Loans that were disbursed before July 1, 2006; your actual interest rate may be lower.)

Step 1: Add your and your spouse's Direct Loan balances together to determine your aggregate loan balance:

- $10,000 + $15,000 = $25,000.

Step 2: Determine the annual payment based on what you would pay over 12 years using standard amortization. To do this, multiply your aggregate loan balance by the constant multiplier for 8.25 percent interest (0.131545). You can view the constant multiplier chart at the end of this notice to determine the constant multiplier that you should use for the interest rate on your loan. If your exact interest rate is not listed, use the next highest rate for estimation purposes.

- 0.131545 × $25,000 = $3,288.63.

Step 3: Multiply the result of Step 2 by the income percentage factor shown in the income percentage factors table that corresponds to your and your spouse's income and then divide the result by 100 (if your and your spouse's aggregate income is not listed in the income percentage factors table, calculate the applicable income percentage factor by following the instructions under the ''Interpolation'' heading later in this notice):

- 100.00 × $3,288.63 ÷ 100 = $3,288.63.

Step 4: Determine 20 percent of your discretionary income. To do this, subtract the poverty level for a family of two, as published in the **Federal Register** on January 24, 2006 (71 FR 3848), from your combined AGI and multiply the result by 20 percent:

- $53,185 − $13,200 = $39,985.
- $39,985 × 0.20 = $7,997.

Step 5: Compare the amount from Step 3 with the amount from Step 4. The lower of the two will be your annual payment amount. You and your spouse will pay the amount calculated under Step 3. To determine your monthly repayment amount, divide the annual amount by 12.

- $3,288.63 ÷ 12 = $274.05.

Interpolation: If your income does not appear on the income percentage factor table, you will have to calculate the income percentage factor through interpolation. For example, assume you are single and your income is $30,000.

Step 1: Find the closest income listed that is less than your income of $30,000 and the closest income listed that is greater than your income of $30,000.

Step 2: Subtract the lower amount from the higher amount (for this discussion, we will call the result the ''income interval''):

- $35,260 − $28,071 = $7,189.

Step 3: Determine the difference between the two income percentage factors that are given for these incomes (for this discussion, we will call the result the ''income percentage factor interval''):

- 88.77% − 80.33% = 8.44%.

Step 4: Subtract from your income the closest income shown on the chart that is less than your income of $30,000:

- $30,000 − $28,071 = $1,929.

Step 5: Divide the result of Step 4 by the income interval determined in Step 2:

- $1,929 ÷ $7,189 = 0.2683.

Step 6: Multiply the result of Step 5 by the income percentage factor interval:

- 8.44% × 0.2683 = 2.2645%.

Step 7: Add the result of Step 6 to the lower of the two income percentage factors used in Step 3 to calculate the income percentage factor interval for $30,000 in income:

- 2.2645% + 80.33% = 82.59% (rounded to the nearest hundredth).

The result is the income percentage factor that will be used to calculate the monthly repayment amount under the ICR plan.

INCOME PERCENTAGE FACTORS FOR 2006

[Based on annual income]

Single		Married/head of household	
Income	Factor (percent)	Income	Factor (percent)
9,218	55.00	9,218	50.52
12,683	57.79	14,544	56.68
16,320	60.57	17,333	59.56
20,040	66.23	22,659	67.79
23,592	71.89	28,071	75.22
28,071	80.33	35,260	87.61
35,260	88.77	44,220	100.00
44,221	100.00	53,185	100.00
53,185	100.00	66,631	109.40
63,922	111.80	89,035	125.00
81,849	123.50	120,404	140.60
115,925	141.20	168,391	150.00
132,919	150.00	275,163	200.00
236,752	200.00		

CONSTANT MULTIPLIER CHART FOR 12-YEAR AMORTIZATION

Interest rate (percent)	Annual constant multiplier
3.500	0.102174
4.000	0.105063
4.500	0.108001
5.000	0.110987

CONSTANT MULTIPLIER CHART FOR 12-YEAR AMORTIZATION—Continued

Interest rate (percent)	Annual constant multiplier
5.500	0.114021
6.000	0.117102
6.800	0.122130
7.000	0.123406

CONSTANT MULTIPLIER CHART FOR 12-YEAR AMORTIZATION—Continued

Interest rate (percent)	Annual constant multiplier
7.900	0.129237
8.000	0.129894
8.250	0.131545

Sample First-Year Monthly Repayment Amounts for a Single Borrower at Various Income and Debt Levels

Income	Initial Debt																			
	$5,000	$7,500	$10,000	$12,500	$15,000	$17,500	$20,000	$22,500	$25,000	$30,000	$35,000	$40,000	$45,000	$50,000	$55,000	$60,000	$70,000	$80,000	$90,000	$100,000
5,000	0	0	0	0	0	0	0	0	0	0	0	0	0	0	0	0	0	0	0	0
6,000	0	0	0	0	0	0	0	0	0	0	0	0	0	0	0	0	0	0	0	0
7,000	0	0	0	0	0	0	0	0	0	0	0	0	0	0	0	0	0	0	0	0
8,000	0	0	0	0	0	0	0	0	0	0	0	0	0	0	0	0	0	0	0	0
9,000	0	0	0	0	0	0	0	0	0	0	0	0	0	0	0	0	0	0	0	0
10,000	3	3	3	3	3	3	3	3	3	3	3	3	3	3	3	3	3	3	3	3
12,500	29	44	45	45	45	45	45	45	45	45	45	45	45	45	45	45	45	45	45	45
15,000	30	45	61	76	87	87	87	87	87	87	87	87	87	87	87	87	87	87	87	87
17,500	32	48	63	79	95	111	127	128	128	128	128	128	128	128	128	128	128	128	128	128
20,000	34	51	67	84	101	118	134	152	168	170	170	170	170	170	170	170	170	170	170	170
22,500	36	54	71	89	107	125	143	161	178	212	212	212	212	212	212	212	212	212	212	212
25,000	38	57	76	95	114	133	152	171	190	228	253	253	253	253	253	253	253	253	253	253
30,000	42	63	84	105	126	147	168	189	210	252	294	336	337	337	337	337	337	337	337	337
35,000	45	68	90	113	135	158	180	203	225	270	315	360	405	420	420	420	420	420	420	420
40,000	48	72	96	120	145	169	193	217	241	289	337	386	434	482	503	503	503	503	503	503
45,000	51	76	102	127	153	178	204	229	254	305	356	407	458	509	560	587	587	587	587	587
50,000	51	76	102	127	153	178	204	229	254	305	356	407	458	509	560	611	670	670	670	670
55,000	52	78	104	130	156	182	208	234	260	311	363	415	467	519	571	623	727	753	753	753
60,000	55	82	109	137	164	191	219	246	273	328	383	438	492	547	602	656	766	837	837	837
65,000	57	85	114	142	171	199	228	256	284	341	398	455	512	569	626	683	796	910	920	920
70,000	57	85	114	142	171	199	228	256	284	341	398	455	512	569	626	683	796	910	1003	1003
80,000	57	85	114	142	171	199	228	256	284	341	398	455	512	569	626	683	796	910	1024	1138
90,000	65	98	130	163	195	228	260	293	325	390	455	512	565	626	683	796	910	1040	1170	1300
100,000	68	101	135	169	203	237	271	304	338	406	474	541	609	676	744	812	947	1082	1218	1353

Sample repayment amounts are based on an interest rate of 6.80%.

Sample First-Year Monthly Repayment Amounts for a Married or Head-of-Household Borrower at Various Income and Debt Levels

Income	Family Size = 3																			
	Initial Debt																			
	$5,000	$7,500	$10,000	$12,500	$15,000	$17,500	$20,000	$22,500	$25,000	$30,000	$35,000	$40,000	$45,000	$50,000	$55,000	$60,000	$70,000	$80,000	$90,000	$100,000
6,000	0	0	0	0	0	0	0	0	0	0	0	0	0	0	0	0	0	0	0	0
7,000	0	0	0	0	0	0	0	0	0	0	0	0	0	0	0	0	0	0	0	0
8,000	0	0	0	0	0	0	0	0	0	0	0	0	0	0	0	0	0	0	0	0
9,000	0	0	0	0	0	0	0	0	0	0	0	0	0	0	0	0	0	0	0	0
10,000	0	0	0	0	0	0	0	0	0	0	0	0	0	0	0	0	0	0	0	0
12,500	0	0	0	0	0	0	0	0	0	0	0	0	0	0	0	0	0	0	0	0
15,000	0	0	0	0	0	0	0	0	0	0	0	0	0	0	0	0	0	0	0	0
17,500	15	15	15	15	15	15	15	15	15	15	15	15	15	15	15	15	15	15	15	15
20,000	32	49	57	57	57	57	57	57	57	57	57	57	57	57	57	57	57	57	57	57
22,500	34	52	69	86	96	96	96	96	96	96	96	96	96	96	96	96	96	96	96	96
25,000	36	54	72	90	108	126	140	140	140	140	140	140	140	140	140	140	140	140	140	140
30,000	40	60	80	100	120	140	160	180	200	223	223	223	223	223	223	223	223	223	223	223
35,000	44	67	89	111	133	155	177	200	222	266	307	307	307	307	307	307	307	307	307	307
40,000	48	72	96	120	144	168	192	216	240	288	335	383	390	390	390	390	390	390	390	390
45,000	51	76	102	127	153	178	204	229	254	305	356	407	458	473	473	473	473	473	473	473
50,000	51	76	102	127	153	178	204	229	254	305	356	407	458	509	557	557	557	557	557	557
55,000	52	77	103	128	155	180	206	232	258	309	361	412	464	515	567	618	640	640	640	640
60,000	53	80	107	133	160	187	213	240	267	320	373	427	480	533	586	640	723	723	723	723
65,000	55	83	110	138	165	193	220	248	275	331	386	441	496	551	606	661	771	807	807	807
70,000	57	85	114	142	171	199	227	256	284	341	398	455	512	569	626	682	796	890	890	890
80,000	60	91	121	151	181	211	242	272	302	362	423	483	544	604	664	725	846	967	1057	1057
90,000	64	96	128	160	192	223	255	287	319	383	447	511	575	639	702	766	864	1022	1149	1223
100,000	66	100	133	166	199	232	266	299	332	398	465	531	597	664	730	797	929	1062	1195	1328

Sample repayment amounts are based on an interest rate of 6.80%.

[FR Doc. 06–5772 Filed 6–27–06; 8:45 am]

BILLING CODE 4000–01–C

ELECTION ASSISTANCE COMMISSION

Notice of Sunshine Act Meeting

AGENCY: United States Election Assistance Commission.

ACTION: Notice of Public Meeting.

DATE AND TIME: Thursday, July 13, 2006, 9:30 a.m.–12:30 p.m. (MDT).

PLACE: Hilton Santa Fe Historic Plaza—Mesa C., 100 Sandoval Street, Santa Fe, NM 87501. (505) 988–2811.

AGENDA: The Commission will receive presentations on effective ballot design and effective polling place signage. The Commission will receive reports on other administrative matters.

This meeting will be open to the public.

FOR FURTHER INFORMATION CONTACT: Bryan Whitener, Telephone: (202) 566–3100.

Thomas R. Wilkey,

Executive Director, U.S. Election Assistance Commission.

[FR Doc. 06–5825 Filed 6–26–06; 1:52 pm]

BILLING CODE 6820–KF–M

DEPARTMENT OF ENERGY

Environmental Management Site-Specific Advisory Board, Paducah

AGENCY: Department of Energy (DOE).

ACTION: Notice of open meeting.

SUMMARY: This notice announces a meeting of the Environmental Management Site-Specific Advisory Board (EM SSAB), Paducah. The Federal Advisory Committee Act (Pub. L. No. 92–463, 86 Stat. 770) requires that public notice of this meeting be announced in the **Federal Register**.

DATES: Thursday, July 20, 2006, 5:30 p.m.–9 p.m.

ADDRESSES: 111 Memorial Drive, Barkley Centre, Paducah, Kentucky 42001.

FOR FURTHER INFORMATION CONTACT: William E. Murphie, Deputy Designated Federal Officer, Department of Energy Portsmouth/Paducah Project Office, 1017 Majestic Drive, Suite 200, Lexington, Kentucky 40513, (859) 219–4001.

SUPPLEMENTARY INFORMATION: Purpose of the Board: The purpose of the Board is to make recommendations to DOE in the areas of environmental restoration, waste management and related activities.

Tentative Agenda

5:30 p.m. Informal Discussion.
6 p.m. Call to Order.
Introductions.
Review of Agenda.
Approval of June Minutes.
6:15 p.m. Deputy Designated Federal Officer's Comments.
6:35 p.m. Federal Coordinator's Comments.
6:40 p.m. Liaisons' Comments.
6:50 p.m. Public Comments and Questions.
7 p.m. Task Forces/Presentations.
- Site Management Plan.
- Paducah Remediation Services.
- Water Disposition/Water Quality Task Force.

8:00 p.m. Public Comments and Questions.
8:10 p.m. Break.
8:20 p.m. Administrative Issues.
- Preparation for August Presentation.
- Budget Review.
- Review of Work Plan.
- Review of Next Agenda.

8:30 p.m. Review of Action Items.
8:35 p.m. Subcommittee Report.
- Executive Committee.

8:50 p.m. Final Comments.
9 p.m. Adjourn.

Public Participation: The meeting is open to the public. Written statements may be filed with the Board either before or after the meeting. Individuals who wish to make oral statements pertaining to agenda items should contact David Dollins at the address listed below or by telephone at (270) 441–6819. Requests must be received five days prior to the meeting and reasonable provision will be made to include the presentation in the agenda. The Deputy Designated Federal Officer is empowered to conduct the meeting in a fashion that will facilitate the orderly conduct of business. Individuals wishing to make public comment will be provided a maximum of five minutes to present their comments.

Minutes: The minutes of this meeting will be available for public review and copying at the U.S. Department of Energy's Freedom of Information Public Reading Room, 1E–190, Forrestal Building, 1000 Independence Avenue, SW., Washington, DC 20585 between 9 a.m. and 4 p.m., Monday–Friday, except Federal holidays. Minutes will also be available at the Department of Energy's Environmental Information Center and Reading Room at 115 Memorial Drive, Barkley Centre, Paducah, Kentucky between 8 a.m. and 5 p.m. on Monday through Friday or by writing to David Dollins, Department of Energy, Paducah Site Office, Post Office Box 1410, MS–103, Paducah, Kentucky 42001 or by calling him at (270) 441–6819.

Issued at Washington, DC, on June 22, 2006.

James N. Solit,

Advisory Committee Management Officer.

[FR Doc. E6–10182 Filed 6–27–06; 8:45 am]

BILLING CODE 6450–01–P

DEPARTMENT OF ENERGY

Environmental Management Site-Specific Advisory Board, Hanford

AGENCY: Department of Energy.

ACTION: Notice of open meeting.

SUMMARY: This notice announces a meeting of the Environmental Management Site-Specific Advisory Board (EM SSAB), Hanford. The Federal Advisory Committee Act (Pub. L. 92–463, 86 Stat. 770) requires that public notice of this meeting be announced in the **Federal Register.**

DATES: Thursday, September 7, 2006, 9 a.m.–5 p.m., Friday, September 8, 2006, 8:30 a.m.–4 p.m.

ADDRESSES: Red Lion Hanford House, 802 George Washington Way, Richland, Washington 99352. Phone Number: (509) 946–7611. Fax Number: (509) 943–8564.

FOR FURTHER INFORMATION CONTACT: Erik Olds, Federal Coordinator, Department of Energy Richland Operations Office, 2440 Stevens Drive, P.O. Box 450, H6–60, Richland, WA 99352; Phone: (509) 376–8656; Fax: (509) 376–1214.

SUPPLEMENTARY INFORMATION:

Purpose of the Board: The purpose of the Board is to make recommendations to DOE in the areas of environmental restoration, waste management, and related activities.

Tentative Agenda:

- Tri-Party Agreement Agencies Senior Managers' Annual Review and Update (U.S. Department of Energy, Office of River Protection and Richland Operations Office; the U.S. Environmental Protection Agency; and the Washington State Department of Ecology).
- Fiscal Year 2007 Hanford Advisory Board Priorities.
- Tutorial Part Two on the Waste Treatment and Immobilization Plant.
- Nominations for the new Hanford Advisory Board Chair.
- Training Session for Issue Managers.
- Discussion on Committee Leadership.

Public Participation: The meeting is open to the public. Written statements may be filed with the Board either before or after the meeting. Individuals who wish to make oral statements pertaining to agenda items should

contact Erik Olds' office at the address or telephone number listed above. Requests must be received five days prior to the meeting and reasonable provision will be made to include the presentation in the agenda. The Deputy Designated Federal Officer is empowered to conduct the meeting in a fashion that will facilitate the orderly conduct of business. Individuals wishing to make public comment will be provided a maximum of five minutes to present their comments.

Minutes: The minutes of this meeting will be available for public review and copying at the U.S. Department of Energy's Freedom of Information Public Reading Room, 1E–190, Forrestal Building, 1000 Independence Avenue, SW., Washington, DC 20585 between 9 a.m. and 4 p.m., Monday–Friday, except Federal holidays. Minutes will also be available by writing to Erik Olds' office at the address or telephone number listed above.

Issued at Washington, DC, on June 22, 2006.

James N. Solit,

Advisory Committee Management Officer.

[FR Doc. E6–10183 Filed 6–27–06; 8:45 am]

BILLING CODE 6450–01–P

DEPARTMENT OF ENERGY

Federal Energy Regulatory Commission

[Docket Nos. ER06–743–000 and ER06–743–001; Docket Nos. ER06–744–000 and ER06–744–001]

Air Liquide Large Industries, U.S. LP; Sabine Cogen, LP; Notice of Issuance of Order

June 19, 2006.

Air Liquide Large Industries U.S. LP (Air Liquide) and Sabine Cogen, LP (Sabine Cogen) filed separate applications for market-based rate authority, with accompanying rate schedules. The proposed market-based rate schedules each provide for the sale of energy, capacity and ancillary services at market-based rates. Air Liquide and Sabine Cogen also requested waiver of various Commission regulations. In particular, Air Liquide and Sabine Cogen requested that the Commission grant blanket approval under 18 CFR part 34 of all future issuances of securities and assumptions of liability by Air Liquide and Sabine Cogen.

On June 15, 2006, pursuant to delegated authority, the Director, Division of Tariffs and Market Development—West, granted the request for blanket approval under part 34. The Director's order also stated that the Commission would publish a separate notice in the **Federal Register** establishing a period of time for the filing of protests. Accordingly, any person desiring to be heard or to protest the blanket approval of issuances of securities or assumptions of liability by Air Liquide and Sabine Cogen should file a motion to intervene or protest with the Federal Energy Regulatory Commission, 888 First Street, NE., Washington, DC 20426, in accordance with Rules 211 and 214 of the Commission's Rules of Practice and Procedure. 18 CFR 385.211, 385.214 (2004).

Notice is hereby given that the deadline for filing motions to intervene or protest is July 17, 2006.

Absent a request to be heard in opposition by the deadline above, Air Liquide and Sabine Cogen are authorized to issue securities and assume obligations or liabilities as a guarantor, indorser, surety, or otherwise in respect of any security of another person; provided that such issuance or assumption is for some lawful object within the corporate purposes of Air Liquide and Sabine Cogen, compatible with the public interest, and is reasonably necessary or appropriate for such purposes.

The Commission reserves the right to require a further showing that neither public nor private interests will be adversely affected by continued approval of Air Liquide's and Sabine Cogen's issuances of securities or assumptions of liability.

Copies of the full text of the Director's Order are available from the Commission's Public Reference Room, 888 First Street, NE., Washington, DC 20426. The Order may also be viewed on the Commission's Web site at *http://www.ferc.gov*, using the eLibrary link. Enter the docket number excluding the last three digits in the docket number filed to access the document. Comments, protests, and interventions may be filed electronically via the internet in lieu of paper. See, 18 CFR 385.2001(a)(1)(iii) and the instructions on the Commission's Web site under the ''e-Filing'' link. The Commission strongly encourages electronic filings.

Magalie R. Salas,

Secretary.

[FR Doc. E6–10121 Filed 6–27–06; 8:45 am]

BILLING CODE 6717–01–P

DEPARTMENT OF ENERGY

Federal Energy Regulatory Commission

[Docket No. RP06–290–001]

CenterPoint Energy Gas Transmission Company; Notice of Revenue Crediting Report

June 20, 2006.

Take notice that on June 14, 2006, CenterPoint Energy Gas Transmission Company (CEGT) tendered for filing as part of its FERC Gas Tariff, Sixth Revised Volume No. 1, Substitute Eighth Revised Sheet No. 18, to be effective May 1, 2006.

CEGT states that this tariff sheet is being filed to correct a calculation error for the NNTS Small Customer rate.

Any person desiring to protest this filing must file in accordance with Rule 211 of the Commission's Rules of Practice and Procedure (18 CFR 385.211). Protests to this filing will be considered by the Commission in determining the appropriate action to be taken, but will not serve to make protestants parties to the proceeding. Such protests must be filed on or before the date as indicated below. Anyone filing a protest must serve a copy of that document on all the parties to the proceeding.

The Commission encourages electronic submission of protests in lieu of paper using the ''eFiling'' link at *http://www.ferc.gov.* Persons unable to file electronically should submit an original and 14 copies of the protest to the Federal Energy Regulatory Commission, 888 First Street, NE., Washington, DC 20426.

This filing is accessible on-line at *http://www.ferc.gov,* using the ''eLibrary'' link and is available for review in the Commission's Public Reference Room in Washington, DC. There is an ''eSubscription'' link on the Web site that enables subscribers to receive e-mail notification when a document is added to a subscribed docket(s). For assistance with any FERC Online service, please e-mail at *FERCOnlineSupport@ferc.gov,* or call (866) 208–3676 (toll free). For TTY, call (202) 502–8659.

Comment Date: 5 p.m. Eastern Time on June 27, 2006.

Magalie R. Salas,

Secretary.

[FR Doc. E6–10159 Filed 6–27–06; 8:45 am]

BILLING CODE 6717–01–P

DEPARTMENT OF ENERGY

Federal Energy Regulatory Commission

[Docket Nos. ER06–738–000; ER06–738–001; ER06–739–000; ER06–739–001]

Cogen Technologies Liden Venture, L.P.; East Coast Power Liden Holding, L.L.C.; Notice of Issuance of Order

June 22, 2006.

Cogen Technologies Liden Venture, L.P. and East Coast Power Liden Holding, L.L.C. (collectively, the Liden Group) filed applications for market-based rate authority, with accompanying rate schedules. The proposed market-based rate schedules provide for the sale of energy, capacity and ancillary services at market-based rates. The Liden Group also requested waivers of various Commission regulations. In particular, the Liden Group requested that the Commission grant blanket approval under 18 CFR part 34 of all future issuances of securities and assumptions of liability by the Liden Group.

On June 21, 2006, pursuant to delegated authority, the Director, Division of Tariffs and Market Development—West, granted the requests for blanket approval under part 34. The Director's order also stated that the Commission would publish a separate notice in the **Federal Register** establishing a period of time for the filing of protests. Accordingly, any person desiring to be heard or to protest the blanket approvals of issuances of securities or assumptions of liability by the Liden Group should file a motion to intervene or protest with the Federal Energy Regulatory Commission, 888 First Street, NE., Washington, DC 20426, in accordance with Rules 211 and 214 of the Commission's Rules of Practice and Procedure. 18 CFR 385.211, 385.214 (2004).

Notice is hereby given that the deadline for filing motions to intervene or protest is July 21, 2006.

Absent a request to be heard in opposition by the deadline above, the Liden Group is authorized to issue securities and assume obligations or liabilities as a guarantor, indorser, surety, or otherwise in respect of any security of another person; provided that such issuance or assumption is for some lawful object within the corporate purposes of the Liden Group, compatible with the public interest, and is reasonably necessary or appropriate for such purposes.

The Commission reserves the right to require a further showing that neither public nor private interests will be adversely affected by continued approvals of the Liden Group's issuances of securities or assumptions of liability.

Copies of the full text of the Director's Order are available from the Commission's Public Reference Room, 888 First Street, NE., Washington, DC 20426. The Order may also be viewed on the Commission's Web site at *http://www.ferc.gov,* using the eLibrary link. Enter the docket number excluding the last three digits in the docket number filed to access the document. Comments, protests, and interventions may be filed electronically via the Internet in lieu of paper. See 18 CFR 385.2001(a)(1)(iii) and the instructions on the Commission's Web site under the ''e-Filing'' link. The Commission strongly encourages electronic filings.

Magalie R. Salas,

Secretary.

[FR Doc. E6–10163 Filed 6–27–06; 8:45 am]

BILLING CODE 6717–01–P

DEPARTMENT OF ENERGY

Federal Energy Regulatory Commission

[Docket No. CP06–386–000]

Dominion Transmission, Inc.; Notice of Request Under Blanket Authorization

June 20, 2006.

Take notice that on June 13, 2006, Dominion Transmission, Inc. (DTI), 120 Tredegar Street, Riverside Building, Richmond, Virginia 23219, filed in Docket No. CP06–386–000 a request pursuant to sections 157.205(b) and 157.208(f)(2) of the Commission's Regulations under the Natural Gas Act (18 CFR 157.205 and 157.208) for authorization to increase the maximum allowable operating pressure (MAOP) of LN 257–S at the Sharon Storage Complex located in Potter County, Pennsylvania, under the authorization issued in Docket No. CP82–537–000 pursuant to section 7 of the Natural Gas Act, all as more fully described in the request.

This filing is available for review at the Commission in the Public Reference Room or may be viewed on the Commission's Web site at *http://www.ferc.gov* using the ''eLibrary'' link. Enter the docket number excluding the last three digits in the docket number field to access the document. For assistance, please contact FERC Online Support at *FERCOnlineSupport@ferc.gov* or toll-free at (866) 208–3676, or for TTY, contact (202) 502–8659.

Any questions concerning this request may be directed to Matthew R. Bley, Manager, Gas Transmission Certificates, Dominion Transmission, Inc., 120 Tredegar Street, Richmond, Virginia 23219, at (804) 819–2877 or Fax (804) 819–2064 or *Matthew_R_Bley@dom.com.*

DTI states that because no compression facilities are available at the Sharon Storage Complex (Sharon), Sharon's pool pressure and inventory levels rely on pipeline pressures available from DTI's State Line and Quinlan Compressor Stations (Quinlan). DTI asserts that since TL527, which connects Quinlan and Sharon has an MAOP of 1,250 psig, it is necessary to uprate the MAOP of LN 257–S from 1,100 psig to 1,250 psig in order to achieve an equilibrium in pressure between Quinlan and Sharon. DTI maintains that the proposed MAOP increase is needed in order to provide greater operating flexibility and to allow for the continued and effective operation of Sharon. DTI contends that LN 257–S was tested to 2,200 psig when it was replaced in 1994.

Any person or the Commission's Staff may, within 45 days after the issuance of the instant notice by the Commission, file pursuant to Rule 214 of the Commission's Procedural Rules (18 CFR 385.214) a motion to intervene or notice of intervention and, pursuant to section 157.205 of the Commission's Regulations under the Natural Gas Act (NGA) (18 CFR 157.205) a protest to the request. If no protest is filed within the time allowed therefore, the proposed activity shall be deemed to be authorized effective the day after the time allowed for protest. If a protest is filed and not withdrawn within 30 days after the time allowed for filing a protest, the instant request shall be treated as an application for authorization pursuant to section 7 of the NGA.

Comments, protests and interventions may be filed electronically via the Internet in lieu of paper. See 18 CFR 385.2001(a)(1)(iii) and the instructions on the Commission's Web site under the ''e-filing'' link. The Commission strongly encourages electronic filings.

Magalie R. Salas,

Secretary.

[FR Doc. E6–10155 Filed 6–27–06; 8:45 am]

BILLING CODE 6717–01–P

DEPARTMENT OF ENERGY

Federal Energy Regulatory Commission

[Docket No. RP06–372–001]

El Paso Natural Gas Company; Notice of Service Agreement

June 20, 2006.

Take notice that on June 12, 2006, El Paso Natural Gas Company (El Paso) tendered for filing a correction to its filing made on May 31, 2006 in the above-referenced proceeding.

El Paso states that since it made its filing on May 31, 2006, it discovered that it failed to discuss one additional change from the pro forma agreement that was made at the request of UNS.

Any person desiring to protest this filing must file in accordance with Rule 211 of the Commission's Rules of Practice and Procedure (18 CFR 385.211). Protests to this filing will be considered by the Commission in determining the appropriate action to be taken, but will not serve to make protestants parties to the proceeding. Such protests must be filed on or before the date as indicated below. Anyone filing a protest must serve a copy of that document on all the parties to the proceeding.

The Commission encourages electronic submission of protests in lieu of paper using the ''eFiling'' link at *http://www.ferc.gov.* Persons unable to file electronically should submit an original and 14 copies of the protest to the Federal Energy Regulatory Commission, 888 First Street, NE., Washington, DC 20426.

This filing is accessible on-line at *http://www.ferc.gov*, using the ''eLibrary'' link and is available for review in the Commission's Public Reference Room in Washington, DC. There is an ''eSubscription'' link on the Web site that enables subscribers to receive e-mail notification when a document is added to a subscribed docket(s). For assistance with any FERC Online service, please e-mail *FERCOnlineSupport@ferc.gov*, or call (866) 208–3676 (toll free). For TTY, call (202) 502–8659.

Comment Date: 5 p.m. Eastern Time on June 27, 2006.

Magalie R. Salas,

Secretary.

[FR Doc. E6–10160 Filed 6–27–06; 8:45 am]

BILLING CODE 6717–01–P

DEPARTMENT OF ENERGY

Federal Energy Regulatory Commission

[Docket No. CP05–29–004]

Freebird Gas Storage, L.L.C.; Notice of Compliance Filing

June 20, 2006.

Take notice that on June 15, 2006, Freebird Gas Storage, L.L.C. (Freebird) tendered for filing as part of its FERC Gas Tariff, Original Volume No. 1, the following tariff sheets to become effective June 1, 2006:

Original Sheet No. 0
Original Sheet No. 3
First Revised Sheet No. 112
First Revised Sheet No. 144
First Revised Sheet Nos. 151–199

Freebird asserts that the purpose of this filing is to comply with the Commission's order issued May 31, 2006, in Docket No. CP05–29–000.

Any person desiring to protest this filing must file in accordance with Rule 211 of the Commission's Rules of Practice and Procedure (18 CFR 385.211). Protests to this filing will be considered by the Commission in determining the appropriate action to be taken, but will not serve to make protestants parties to the proceeding. Such protests must be filed on or before the date as indicated below. Anyone filing a protest must serve a copy of that document on all the parties to the proceeding.

The Commission encourages electronic submission of protests in lieu of paper using the ''eFiling'' link at *http://www.ferc.gov.* Persons unable to file electronically should submit an original and 14 copies of the protest to the Federal Energy Regulatory Commission, 888 First Street, NE., Washington, DC 20426.

This filing is accessible on-line at *http://www.ferc.gov,* using the ''eLibrary'' link and is available for review in the Commission's Public Reference Room in Washington, DC. There is an ''eSubscription'' link on the Web site that enables subscribers to receive e-mail notification when a document is added to a subscribed docket(s). For assistance with any FERC Online service, please e-mail *FERCOnlineSupport@ferc.gov,* or call (866) 208–3676 (toll free). For TTY, call (202) 502–8659.

Comment Date: 5 p.m. Eastern Time on July 7, 2006.

Magalie R. Salas,

Secretary.

[FR Doc. E6–10161 Filed 6–27–06; 8:45 am]

BILLING CODE 6717–01–P

DEPARTMENT OF ENERGY

Federal Energy Regulatory Commission

[Docket No. ER06–890–000]

Hampton Lumber Mills-Washington, Inc.; Notice of Issuance of Order

June 19, 2006.

Hampton Lumber Mills-Washington, Inc. (Hampton Lumber) filed an application for market-based rate authority, with an accompanying rate schedule. The proposed market-based rate schedule provides for the sale of energy and capacity at market-based rates. Hampton Lumber also requested waiver of various Commission regulations. In particular, Hampton Lumber requested that the Commission grant blanket approval under 18 CFR part 34 of all future issuances of securities and assumptions of liability by Hampton Lumber.

On June 15, 2006, pursuant to delegated authority, the Director, Division of Tariffs and Market Development—West, granted the request for blanket approval under part 34. The Director's order also stated that the Commission would publish a separate notice in the **Federal Register** establishing a period of time for the filing of protests. Accordingly, any person desiring to be heard or to protest the blanket approval of issuances of securities or assumptions of liability by Hampton Lumber should file a motion to intervene or protest with the Federal Energy Regulatory Commission, 888 First Street, NE., Washington, DC 20426, in accordance with Rules 211 and 214 of the Commission's Rules of Practice and Procedure. 18 CFR 385.211, 385.214 (2004).

Notice is hereby given that the deadline for filing motions to intervene or protest is July 17, 2006.

Absent a request to be heard in opposition by the deadline above, Hampton Lumber is authorized to issue securities and assume obligations or liabilities as a guarantor, indorser, surety, or otherwise in respect of any security of another person; provided that such issuance or assumption is for some lawful object within the corporate purposes of Hampton Lumber, compatible with the public interest, and is reasonably necessary or appropriate for such purposes.

The Commission reserves the right to require a further showing that neither public nor private interests will be adversely affected by continued approval of Hampton Lumber's issuances of securities or assumptions of liability.

Copies of the full text of the Director's Order are available from the Commission's Public Reference Room, 888 First Street, NE., Washington, DC 20426. The Order may also be viewed on the Commission's Web site at *http://www.ferc.gov,* using the eLibrary link. Enter the docket number excluding the last three digits in the docket number filed to access the document. Comments, protests, and interventions may be filed electronically via the Internet in lieu of paper. See, 18 CFR 385.2001(a)(1)(iii) and the instructions on the Commission's Web site under the ''e-Filing'' link. The Commission strongly encourages electronic filings.

Magalie R. Salas,

Secretary.

[FR Doc. E6–10123 Filed 6–27–06; 8:45 am]

BILLING CODE 6717–01–P

DEPARTMENT OF ENERGY

Federal Energy Regulatory Commission

[Docket Nos. ER06–94–001; EL06–77–000]

ISO-New England Inc.; Notice of Institution of Proceeding and Refund Effective Date

June 19, 2006.

On June 16, 2006, the Commission issued an order that instituted a proceeding in Docket No. EL06–77–000, pursuant to section 206 of the Federal Power Act (FPA), 16 U.S.C. 824e (2005), concerning the justness and reasonableness of ISO-New England Inc.'s external affairs and corporate communications expenses. *ISO-New England, Inc.,* 115 FERC ¶ 61,332 (2006).

The refund effective date in Docket No. EL06–77–000, established pursuant to section 206(b) of the FPA, will be the date of publication of this notice in the **Federal Register**.

Magalie R. Salas,

Secretary.

[FR Doc. E6–10124 Filed 6–27–06; 8:45 am]

BILLING CODE 6717–01–P

DEPARTMENT OF ENERGY

Federal Energy Regulatory Commission

[Docket Nos. ER06–761–000; ER06–761–001]

Rumford Paper Company; Notice of Issuance of Order

June 19, 2006.

Rumford Paper Company (Rumford) filed an application for market-based rate authority, with an accompanying rate schedule. The proposed market-based rate schedule provides for the sale of energy and capacity at market-based rates. Rumford also requested waiver of various Commission regulations. In particular, Rumford requested that the Commission grant blanket approval under 18 CFR part 34 of all future issuances of securities and assumptions of liability by Rumford.

On June 15, 2006, pursuant to delegated authority, the Director, Division of Tariffs and Market Development—West, granted the request for blanket approval under part 34. The Director's order also stated that the Commission would publish a separate notice in the **Federal Register** establishing a period of time for the filing of protests. Accordingly, any person desiring to be heard or to protest the blanket approval of issuances of securities or assumptions of liability by Rumford should file a motion to intervene or protest with the Federal Energy Regulatory Commission, 888 First Street, NE., Washington, DC 20426, in accordance with Rules 211 and 214 of the Commission's Rules of Practice and Procedure. 18 CFR 385.211, 385.214 (2004).

Notice is hereby given that the deadline for filing motions to intervene or protest is July 17, 2006.

Absent a request to be heard in opposition by the deadline above, Rumford is authorized to issue securities and assume obligations or liabilities as a guarantor, indorser, surety, or otherwise in respect of any security of another person; provided that such issuance or assumption is for some lawful object within the corporate purposes of Rumford, compatible with the public interest, and is reasonably necessary or appropriate for such purposes.

The Commission reserves the right to require a further showing that neither public nor private interests will be adversely affected by continued approval of Rumford's issuances of securities or assumptions of liability.

Copies of the full text of the Director's Order are available from the Commission's Public Reference Room, 888 First Street, NE., Washington, DC 20426. The Order may also be viewed on the Commission's Web site at *http://www.ferc.gov,* using the eLibrary link. Enter the docket number excluding the last three digits in the docket number filed to access the document. Comments, protests, and interventions may be filed electronically via the Internet in lieu of paper. See, 18 CFR 385.2001(a)(1)(iii) and the instructions on the Commission's Web site under the ''e-Filing'' link. The Commission strongly encourages electronic filings.

Magalie R. Salas,

Secretary.

[FR Doc. E6–10122 Filed 6–27–06; 8:45 am]

BILLING CODE 6717–01–P

DEPARTMENT OF ENERGY

Federal Energy Regulatory Commission

[Docket No. CP06–397–000]

Transcontinental Gas Pipe Line Corporation; Notice of Abandonment

June 22, 2006.

Take notice that on June 21, 2006, Transcontinental Gas Pipe Line Corporation (Transco), P.O. Box 1396, Houston, Texas, 77251, filed an application under section 7(b) of the Natural Gas Act to abandon the firm transportation service Transco provides to South Carolina Pipeline Corporation (SCPC) and to amend Transco's Rate Schedule GSS certificate to effectuate a transfer of the GSS service entitlement held by SCPC to South Carolina Electric and Gas Company and Patriots Energy Group.

This filing is available for review at the Commission in the Public Reference Room or may be viewed on the Commission's Web site at *http://www.ferc.gov* using the ''eLibrary'' link. Enter the docket number excluding the last three digits in the docket number field to access the document. For assistance, please contact FERC Online Support at *FERCOnlineSupport@ferc.gov* or toll-free at (866) 208–3676, or for TTY, contact (202) 502–8659.

Any questions concerning this request may be directed to Transco's contact person for this proceeding: Ingrid Germany, Staff Regulatory Analyst, Certificates and Tariffs, P.O. Box 1396, Houston, Texas, 77251; Phone: (713) 215–4015.

Transco seeks these authorizations at the request of SCPC and requests that the necessary authorizations be granted

contingent upon and coincident with the proposed commencement of operation by Carolina Gas Transmission Corporation (Carolina Gas) as an interstate natural gas pipeline pursuant to any certificate and other authorizations granted by the Commission in an order approving the proposed restructuring of SCPC in Docket Nos. CP06–71, CP06–72 and CP06–73. The above restructuring proposal by Carolina Gas and SCPC is currently pending before the Commission in the dockets listed.

Any person desiring to intervene or to protest this filing must file in accordance with Rules 211 and 214 of the Commission's Rules of Practice and Procedure (18 CFR 385.211 and 385.214). Protests will be considered by the Commission in determining the appropriate action to be taken, but will not serve to make the protestants parties to the proceeding. Any person wishing to become a party must file a notice of intervention or a motion to intervene, as appropriate. Such notices, motions, or protests must be filed on or before the comment date. Anyone filing a motion to intervene or to protest must serve a copy of that document on the Applicant. On or before the comment date, it is not necessary to serve motions to intervene or protests on persons other than the Applicant.

The Commission encourages electronic submission of protests and interventions in lieu of paper using the ''eFiling'' link at *http://www.ferc.gov.* Persons unable to file electronically should submit an original and 14 copies of the protest or intervention to the Federal Energy Regulatory Commission, 888 First Street, NE., Washington, DC 20426.

Comment Date: 5 p.m. Eastern Time on July 11, 2006.

Magalie R. Salas,

Secretary.

[FR Doc. E6–10171 Filed 6–27–06; 8:45 am]

BILLING CODE 6717–01–P

DEPARTMENT OF ENERGY

Federal Energy Regulatory Commission

[Docket No. CP06–361–000]

Freeport LNG Development, L.P.; Notice of Availability of the Environmental Assessment for the Proposed Freeport LNG Phase II Project

June 19, 2006.

The staff of the Federal Energy Regulatory Commission (FERC or Commission) has prepared this Environmental Assessment (EA) for the construction and operation of the expansion of the Freeport liquefied natural gas (LNG) import terminal (referred to as the Freeport LNG Phase II Project or Project) as proposed by Freeport LNG Development, L.P. (Freeport) in the above-referenced docket.

The EA was prepared to satisfy the requirements of the National Environmental Policy Act (NEPA). The staff concludes that approval of the Freeport LNG Phase II Project, with appropriate mitigating measures as recommended, would not constitute a major Federal action significantly affecting the quality of the human environment. The EA also contains our final General Conformity Determination.

The EA assesses the potential environmental effects of the construction and operation of the proposed expansion of the Freeport LNG terminal in Brazoria County, Texas including the construction of:

- An additional LNG ship berth and associated unloading facilities that would have the capacity to unload up to 200 LNG ships per year;
- Additional vaporizers and associated systems, including an air tower; and
- An additional LNG storage tank and associated systems.

The purpose of the Project is to provide the facilities necessary for shippers, including MC Global Gas Corporation (a subsidiary of Mitsubishi Corporation [Mitsubishi]), to deliver up to 2.5 Mcfd of natural gas derived from LNG to the Texas intrastate pipeline system in Stratton Ridge. Delivery of gas to the Stratton Ridge area would allow to gas to be delivered to the intrastate market or potentially transported to the interstate pipeline system for delivery elsewhere.

The EA has been placed in the public files of the FERC. A limited number of copies of the EA are available for distribution and public inspection at: Federal Energy Regulatory Commission, Public Reference Room, 888 First Street, NE., Room 2A, Washington, DC 20426. (202) 502–8371.

Copies of the EA have been mailed to Federal, state and local agencies, public interest groups, interested individuals, newspapers, and parties to this proceeding.

Any person wishing to comment on the EA may do so. To ensure consideration prior to a Commission decision on the proposal, it is important that we receive your comments before the date specified below. Please carefully follow these instructions to ensure that your comments are received in time and properly recorded:

- Send an original and two copies of your comments to: Secretary, Federal Energy Regulatory Commission, 888 First St., NE., Room 1A, Washington, DC 20426;
- Label one copy of the comments for the attention of the Gas Branch 2, PJ11.2.
- Reference Docket No. CP06–361–000; and
- Mail your comments so that they will be received in Washington, DC on or before July 19, 2006.

Please note that we are continuing to experience delays in mail deliveries from the U.S. Postal Service. As a result, we will include all comments that we receive within a reasonable time frame in our environmental analysis of this project. However, the Commission strongly encourages electronic filing of any comments or interventions or protests to this proceeding. See 18 CFR 385.2001(a)(1)(iii) and the instructions on the Commission's Web site at *http://www.ferc.gov* under the ''e-Filing'' link and the link to the User's Guide. Before you can file comments you will need to create a free account which can be created by clicking on ''Sign-up.''

Comments will be considered by the Commission but will not serve to make the commentor a party to the proceeding. Any person seeking to become a party to the proceeding must file a motion to intervene pursuant to Rule 214 of the Commission's Rules of Practice and Procedures (18 CFR 385.214).[1] Only intervenors have the right to seek rehearing of the Commission's decision.

Affected landowners and parties with environmental concerns may be granted intervenor status upon showing good cause by stating that they have a clear and direct interest in this proceeding which would not be adequately represented by any other parties. You do not need intervenor status to have your comments considered.

Additional information about the Project is available from the Commission's Office of External Affairs, at 1–866–208–FERC or on the FERC Internet Web site (*http://www.ferc.gov*) using the eLibrary link. Click on the ''eLibrary'' link, click on ''General Search'' and enter the docket number excluding the last three digits in the Docket Number field. Be sure you have selected an appropriate date range. For assistance, please contact FERC Online Support at:

[1] Interventions may also be filed electronically via the Internet in lieu of paper. See the previous discussion on filing comments electronically.

FERCOnlineSupport@ferc.gov or toll free at 1–866–208–3676, or for TTY at (202) 502–8659. The eLibrary link on the FERC Internet Web site also provides access to the texts of formal documents issued by the Commission, such as orders, notices, and rulemakings.

Magalie R. Salas,

Secretary.

[FR Doc. E6–10128 Filed 6–27–06; 8:45 am]

BILLING CODE 6717–01–P

DEPARTMENT OF ENERGY

Federal Energy Regulatory Commission

[Project No. 2144–035–Washington]

City of Seattle, WA; Errata Notice

June 20, 2006.

On June 19, 2006 the Commission issued a ''Notice of Scoping Meeting and Site Visits'' for the above-referenced proceeding. The time listed under item (m), *Nighttime Scoping Meeting* is corrected as follows:

Date and Time of Meeting: July 19, 2006, from 7 p.m. to 9 p.m. (PDT).

In addition, the fourth sentence under item (m) *Site Visits* is corrected as follows:

Those interested in participating in site visits must notify Mary Pat DiLeva of their intent at *marypat.dileva@seattle.gov* by June 30, 2006.

Magalie R. Salas,

Secretary.

[FR Doc. E6–10157 Filed 6–27–06; 8:45 am]

BILLING CODE 6717–01–P

DEPARTMENT OF ENERGY

Federal Energy Regulatory Commission

[Docket No. RP05–422–000]

El Paso Natural Gas Company; Notice of Informal Settlement Conference

June 20, 2006.

Take notice that an informal settlement conference will be convened in this proceeding commencing at 9 a.m. (EST) on June 28, 2006, at the offices of the Federal Energy Regulatory Commission, 888 First Street, NE., Hearing Room 1, Washington, DC 20426, for the purpose of exploring the possible settlement of the above-referenced dockets.

Any party, as defined by 18 CFR 385.102(c), or any participant as defined by 18 CFR 385.102(b), is invited to attend. Persons wishing to become a party must move to intervene and receive intervenor status pursuant to the Commission's regulations (18 CFR 385.214).

FERC conferences are accessible under section 508 of the Rehabilitation Act of 1973. For accessibility accommodations please send an e-mail to *accessibility@ferc.gov* or call toll free 1–866–208–3372 (voice) or 202–208–1659 (TTY), or send a FAX to (202) 208–2106, with the required accommodations.

For additional information, please contact Hollis Alpert, *hollis.alpert@ferc.gov*, (202) 502–8783.

Magalie R. Salas,

Secretary.

[FR Doc. E6–10158 Filed 6–27–06; 8:45 am]

BILLING CODE 6717–01–P

DEPARTMENT OF ENERGY

Federal Energy Regulatory Commission

Notice of FERC Staff Attendance at Meetings of New York Independent System Operator, Inc.

June 20, 2006.

The Federal Energy Regulatory Commission hereby gives notice that members of its staff may attend the meeting noted below of the New York Independent System Operator. The attendance by staff is part of the Commission's ongoing outreach efforts.

Electric System Planning Working Group (ESPWG), June 22, 2006, 10 a.m.–4 p.m. (EDT), New York State Nurses Association, 11 Cornell Road, Lantham, NY 12210.

The discussions may address matters at issue in the following proceedings:

Docket No. ER04–449, *New York Independent System Operator, Inc.*

Docket No. EL06–1, *New York Independent System Operator, Inc.*

The meeting is open to the public.

For additional information, contact Rachel Spiker, Office of Energy Markets and Reliability at 202–502–8801 or by e-mail at *Rachel.spiker@ferc.gov*

Magalie R. Salas,

Secretary.

[FR Doc. E6–10156 Filed 6–27–06; 8:45 am]

BILLING CODE 6717–01–P

DEPARTMENT OF ENERGY

Federal Energy Regulatory Commission

[Docket No. RM98–1–000]

Records Governing Off-the Record Communications; Public Notice

June 19, 2006.

This constitutes notice, in accordance with 18 CFR 385.2201(b), of the receipt of prohibited and exempt off-the-record communications.

Order No. 607 (64 FR 51222, September 22, 1999) requires Commission decisional employees, who make or receive a prohibited or exempt off-the-record communication relevant to the merits of a contested proceeding, to deliver to the Secretary of the Commission, a copy of the communication, if written, or a summary of the substance of any oral communication.

Prohibited communications are included in a public, non-decisional file associated with, but not a part of, the decisional record of the proceeding. Unless the Commission determines that the prohibited communication and any responses thereto should become a part of the decisional record, the prohibited off-the-record communication will not be considered by the Commission in reaching its decision. Parties to a proceeding may seek the opportunity to respond to any facts or contentions made in a prohibited off-the-record communication, and may request that the Commission place the prohibited communication and responses thereto in the decisional record. The Commission will grant such a request only when it determines that fairness so requires. Any person identified below as having made a prohibited off-the-record communication shall serve the document on all parties listed on the official service list for the applicable proceeding in accordance with Rule 2010, 18 CFR 385.2010.

Exempt off-the-record communications are included in the decisional record of the proceeding, unless the communication was with a cooperating agency as described by 40 CFR 1501.6, made under 18 CFR 385.2201(e)(1)(v).

The following is a list of off-the-record communications recently received by the Secretary of the Commission. The communications listed are grouped by docket numbers in ascending order. These filings are available for review at the Commission in the Public Reference Room or may be viewed on the Commission's Web site at *http://www.ferc.gov* using the eLibrary

link. Enter the docket number, excluding the last three digits, in the docket number field to access the document. For assistance, please contact FERC, Online Support at *FERCOnlineSupport@ferc.gov* or toll free at (866) 208–3676, or for TTY, contact (202) 502–8659.

Exempt:

Docket No.	Date received	Presenter or requester
1. CP06–12–000, CP06–13–000.	6–14–06	Kyle Baker.
2. Project No. 1185–002.	6–14–06	Jim Fargo.
3. Project No. 2145–060.	6–14–06	Bryce Bealba.
4. Project No. 2237–013.	6–14–06	Joseph Mayson.
5. Project Nos. 12597–002, 12598–002 and 12599–002.	6–14–06	Laura Dean.[1]
6. Project Nos. 12597–002, 12598–002 and 12599–002.	6–14–06	Stan Wilmoth.

Magalie R. Salas,

Secretary.

[FR Doc. E6–10120 Filed 6–27–06; 8:45 am]

BILLING CODE 6717–01–P

[1] One of two e-mails from Laura Dean, Advisory Council on Historic Preservation.

ENVIRONMENTAL PROTECTION AGENCY

[FRL–8189–8]

Notice of Charter Renewal

Agency: Environmental Protection Agency (EPA).

Notice is hereby given that the Charter for the Environmental Protection Agency's National Advisory Council for Environmental Policy and Technology (NACEPT) will be renewed for an additional two-year period. This committee has been determined to be in the public interest, in accordance with the provisions of the Federal Advisory Committee Act (FACA), 5 U.S.C. App. 2 § 9(c). The purpose of NACEPT is to provide advice and recommendations to the Administrator of EPA on a broad range of environmental policy, technology and management issues. Inquiries may be directed to Sonia Altieri, U.S. EPA, (Mail Code 1601-E), 1200 Pennsylvania Avenue, NW., Washington, DC 20460, telephone (202) 233–0061, or *altieri.sonia@epa.gov*.

Dated: June 20, 2006.

Rafael DeLeon,

Director, Office of Cooperative Environmental Management.

[FR Doc. 06–5852 Filed 6–27–06; 8:45 am]

BILLING CODE 6560–50–P

ENVIRONMENTAL PROTECTION AGENCY

[EPA–HQ–OPP–2004–0371; FRL–8073–1]

Ethephon; Tolerance Reassessment Decision for Low Risk Pesticide; Notice of Availability

AGENCY: Environmental Protection Agency (EPA).

ACTION: Notice.

SUMMARY: This notice announces the availability of EPA's Tolerance Reassessment Decision (TRED) for the pesticide ethephon, and opens a public comment period on this document, related risk assessments, and other support documents. EPA has reviewed this pesticide ethephon through a modified, streamlined version of the public participation process that the Agency uses to involve the public in developing pesticide tolerance reassessment and reregistration decisions. Through the tolerance reassessment program, EPA is ensuring that all pesticides meet current health and food safety standards.

DATES: Comments must be received on or before August 28, 2006.

ADDRESSES: Submit your comments, identified by docket identification (ID) number EPA–HQ–OPP–2004–0371, by one of the following methods:

• Federal eRulemaking Portal: *http://www.regulations.gov*. Follow the on-line instructions for submitting comments.

• *Mail*: Office of Pesticide Programs (OPP) Regulatory Public Docket (7502P), Environmental Protection Agency, 1200 Pennsylvania Ave., NW, Washington, DC 20460-0001.

• *Delivery*: OPP Regulatory Public Docket (7502P), Environmental Protection Agency, Rm. S-4400, One Potomac Yard (South Building), 2777 S. Crystal Drive, Arlington, VA. Deliveries are only accepted during the Docket's normal hours of operation (8:30 a.m. to 4 p.m., Monday through Friday, excluding legal holidays). Special arrangements should be made for deliveries of boxed information. The Docket telephone number is (703) 305-5805.

Instructions: Direct your comments to docket ID number EPA–HQ–OPP–2004–0371. EPA's policy is that all comments received will be included in the docket without change and may be made available on-line at *http://www.regulations.gov*, including any personal information provided, unless the comment includes information claimed to be Confidential Business Information (CBI) or other information whose disclosure is restricted by statute. Do not submit information that you consider to be CBI or otherwise protected through regulations.gov or e-mail. The Federal regulations.gov website is an ''anonymous access'' system, which means EPA will not know your identity or contact information unless you provide it in the body of your comment. If you send an e-mail comment directly to EPA without going through regulations.gov, your e-mail address will be automatically captured and included as part of the comment that is placed in the docket and made available on the Internet. If you submit an electronic comment, EPA recommends that you include your name and other contact information in the body of your comment and with any disk or CD-ROM you submit. If EPA cannot read your comment due to technical difficulties and cannot contact you for clarification, EPA may not be able to consider your comment. Electronic files should avoid the use of special characters, any form of encryption, and be free of any defects or viruses.

Docket: All documents in the docket are listed in the docket index. Although listed in the index, some information is not publicly available, e.g., CBI or other information whose disclosure is restricted by statute. Certain other material, such as copyrighted material, is not placed on the Internet and will be publicly available only in hard copy form. Publicly available docket materials are available either in the electronic docket at *http://www.regulations.gov*, or, if only available in hard copy, at the OPP Regulatory Public Docket in Rm. S-4400, One Potomac Yard (South Building), 2777 S. Crystal Drive, Arlington, VA. The hours of operation of this Docket Facility are from 8:30 a.m. to 4 p.m., Monday through Friday, excluding legal holidays. The Docket telephone number is (703) 305-5805.

FOR FURTHER INFORMATION CONTACT: Wilhelmena Livingston, Special Review and Reregistration Division (7508P), Office of Pesticide Programs, Environmental Protection Agency, 1200 Pennsylvania Ave., NW., Washington, DC 20460-0001; telephone number: (703) 308-8025 fax number: (703) 308-8005; e-mail address: *livingston.wilhelmena@epa.gov*.

SUPPLEMENTARY INFORMATION:

I. General Information

A. Does this Action Apply to Me?

This action is directed to the public in general, and may be of interest to a wide range of stakeholders including environmental, human health, and agricultural advocates; the chemical industry; pesticide users; and members of the public interested in the sale, distribution, or use of pesticides. Since others also may be interested, the Agency has not attempted to describe all the specific entities that may be affected by this action. If you have any questions regarding the applicability of this action to a particular entity, consult the person listed under **FOR FURTHER INFORMATION CONTACT**.

B. What Should I Consider as I Prepare My Comments for EPA?

1. *Submitting CBI.* Do not submit this information to EPA through regulations.gov or e-mail. Clearly mark the part or all of the information that you claim to be CBI. For CBI information in a disk or CD ROM that you mail to EPA, mark the outside of the disk or CD ROM as CBI and then identify electronically within the disk or CD ROM the specific information that is claimed as CBI. In addition to one complete version of the comment that includes information claimed as CBI, a copy of the comment that does not contain the information claimed as CBI must be submitted for inclusion in the public docket. Information so marked will not be disclosed except in accordance with procedures set forth in 40 CFR part 2.

2. *Tips for preparing your comments.* When submitting comments, remember to:

i. Identify the document by docket ID number and other identifying information (subject heading, **Federal Register** date and page number).

ii. Follow directions. The Agency may ask you to respond to specific questions or organize comments by referencing a Code of Federal Regulations (CFR) part or section number.

iii. Explain why you agree or disagree; suggest alternatives and substitute language for your requested changes.

iv. Describe any assumptions and provide any technical information and/or data that you used.

v. If you estimate potential costs or burdens, explain how you arrived at your estimate in sufficient detail to allow for it to be reproduced.

vi. Provide specific examples to illustrate your concerns and suggest alternatives.

vii. Explain your views as clearly as possible, avoiding the use of profanity or personal threats.

viii. Make sure to submit your comments by the comment period deadline identified.

II. Background

A. What Action is the Agency Taking?

EPA has reassessed the uses of ethephon, reassessed 45 existing tolerances or legal residue limits, and on June 15, 2006, reached a tolerance reassessment decision for this pesticide. Ethephon (an organophosphonate) is a plant growth regulator. It regulates phases of plant growth and development by application at various growth stages and sites. Ethephon is used to promote fruit ripening, abscission, flower induction, breaking of apical dominance (inhibition of the growth of lateral buds by the terminal bud of a shoot), and other plant responses. Ethephon is registered on a number of terrestrial food, feed, and nonfood crops, greenhouse nonfood crops, and outdoor plants.

The Agency is now issuing for comment the resulting Report on Food Quality Protection Act (FQPA) Tolerance Reassessment and Risk Management Decision for ethephon, known as a TRED, as well as related risk assessments and technical support documents.

EPA developed the ethephon TRED through a modified, streamlined version of its public process for making tolerance reassessment and reregistration eligibility decisions. Through these programs, the Agency is ensuring that pesticides meet current standards under the Federal Food, Drug, and Cosmetic Act (FFDCA) and the Federal Insecticide, Fungicide, and Rodenticide Act (FIFRA), as amended by FQPA. EPA must review tolerances and tolerance exemptions that were in effect when the FQPA was enacted, to ensure that these existing pesticide residue limits for food and feed commodities meet the safety standard established by the new law. Tolerances are considered reassessed once the safety finding has been made or a revocation occurs. EPA has reviewed and made the requisite safety finding for the ethephon tolerances included in this notice.

EPA is applying the principles of public participation to all pesticides undergoing reregistration and tolerance reassessment. The Agency's Pesticide Tolerance Reassessment and Reregistration; Public Participation Process, published in the **Federal Register** of May 14, 2004 (69 FR 26819) (FRL–7357–9) explains that in conducting these programs, the Agency is tailoring its public participation process to be commensurate with the level of risk, extent of use, complexity of issues, and degree of public concern associated with each pesticide. EPA can expeditiously reach decisions for pesticides like ethephon, which pose no risk concerns and require no risk mitigation. Once EPA assesses uses and risks for such pesticides, the Agency may go directly to a decision and prepare a document summarizing its findings, such as the ethephon TRED.

The tolerance reassessment program is being conducted under Congressionally mandated time frames, and EPA recognizes the need both to make timely decisions and to involve the public in finding ways to effectively mitigate pesticide risks. Ethephon, however, poses no risks that require mitigation. The Agency therefore is issuing the ethephon TRED, its risk assessments, and related support documents simultaneously for public comment. The comment period is intended to provide an opportunity for public input and a mechanism for initiating any necessary amendments to the TRED. All comments should be submitted using the methods in **ADDRESSES**, and must be received by EPA on or before the closing date. These comments will become part of the Agency Docket for ethephon. Comments received after the close of the comment period will be marked ''late.'' EPA is not required to consider these late comments.

EPA will carefully consider all comments received by the closing date. If any comment significantly affects the document, EPA also will publish an amendment to the TRED in the **Federal Register**. In the absence of substantive comments requiring changes, the decisions reflected in the TRED will be implemented as presented.

B. What is the Agency's Authority for Taking this Action?

Section 408(q) of the FFDCA, 21 U.S.C. 346a(q), requires EPA to review tolerances and exemptions for pesticide residues in effect as of August 2, 1996, to determine whether the tolerance or exemption meets the requirements of section 408(b)(2) or (c)(2) of FFDCA. This review is to be completed by August 3, 2006.

List of Subjects

Environmental protection, Pesticides and pests.

Dated: June 20, 2006.

Debra Edwards,

Director, Special Review and Reregistration Division, Office of Pesticide Programs.

[FR Doc. 06–5854 Filed 6–27–06; 8:45 am]

BILLING CODE 6560–50–S

ENVIRONMENTAL PROTECTION AGENCY

[EPA–HQ–OPP–2006–0084; FRL–8073–6]

Notice of Receipt of Requests to Voluntarily Cancel Certain Pesticide Registrations

AGENCY: Environmental Protection Agency (EPA).

ACTION: Notice.

SUMMARY: In accordance with section 6(f)(1) of the Federal Insecticide, Fungicide, and Rodenticide Act (FIFRA), as amended, EPA is issuing a notice of receipt of request by registrants to voluntarily cancel certain pesticide registrations and providing a public comment period.

DATES: Unless a request is withdrawn by December 26, 2006 or July 28, 2006 for registrations for which the registrant requested a waiver of the 180-day comment period, orders will be issued canceling these registrations. The Agency will consider withdrawal requests postmarked no later than December 26, 2006 or July 28, 2006, whichever is applicable. Comments must be received on or before December 26, 2006 or July 28, 2006, for those registrations where the 180–day comment period has been waived.

ADDRESSES: Submit your comments and your withdrawal request, identified by docket identification (ID) number EPA–HQ–OPP–2006–0084, by one of the following methods:

• *Federal eRulemaking Portal*: *http://www.regulations.gov*. Follow the on-line instructions for submitting comments.

• *Mail*: Office of Pesticide Programs (OPP) Regulatory Public Docket (7502P), Environmental Protection Agency, 1200 Pennsylvania Ave., NW., Washington, DC 20460-0001. Written withdrawal requests should be to the Attention of: John Jamula, Information Technology and Resources Management Division (7502P), at the address under **FOR FURTHER INFORMATION CONTACT**.

• *Delivery*: OPP Regulatory Public Docket (7502P), Environmental Protection Agency, Rm. S-4400, One Potomac Yard (South Building), 2777 S. Crystal Drive, Arlington, VA. Deliveries are only accepted during the Docket's normal hours of operation (8:30 a.m. to 4 p.m., Monday through Friday, excluding legal holidays). Special arrangements should be made for deliveries of boxed information. The Docket telephone number is (703) 305-5805.

Instructions: Direct your comments to docket ID number EPA–HQ–OPP–2006–0084. EPA's policy is that all comments received will be included in the docket without change and may be made available on-line at *http://www.regulations.gov*, including any personal information provided, unless the comment includes information claimed to be Confidential Business Information (CBI) or other information whose disclosure is restricted by statute. Do not submit information that you consider to be CBI or otherwise protected through regulations.gov or e-mail. The Federal regulations.gov website is an ''anonymous access'' system, which means EPA will not know your identity or contact information unless you provide it in the body of your comment. If you send an e-mail comment directly to EPA without going through regulations.gov, your e-mail address will be automatically captured and included as part of the comment that is placed in the docket and made available on the Internet. If you submit an electronic comment, EPA recommends that you include your name and other contact information in the body of your comment and with any disk or CD-ROM you submit. If EPA cannot read your comment due to technical difficulties and cannot contact you for clarification, EPA may not be able to consider your comment. Electronic files should avoid the use of special characters, any form of encryption, and be free of any defects or viruses.

Docket: All documents in the docket are listed in the docket index. Although listed in the index, some information is not publicly available, e.g., CBI or other information whose disclosure is restricted by statute. Certain other material, such as copyrighted material, is not placed on the Internet and will be publicly available only in hard copy form. Publicly available docket materials are available either in the electronic docket at *http://www.regulations.gov*, or, if only available in hard copy, at the OPP Regulatory Public Docket in Rm. S-4400, One Potomac Yard (South Building), 2777 S. Crystal Drive, Arlington, VA. The hours of operation of this Docket Facility are from 8:30 a.m. to 4 p.m., Monday through Friday, excluding legal holidays. The Docket telephone number is (703) 305-5805.

FOR FURTHER INFORMATION CONTACT: John Jamula, Information Technology and Resources Management Division (7502P), Office of Pesticide Programs, Environmental Protection Agency, 1200 Pennsylvania Ave., NW., Washington, DC 20460-0001; telephone number: (703) 305-6426; e-mail address: *jamula.john@epa.gov*.

SUPPLEMENTARY INFORMATION:

I. General Information

A. Does this Action Apply to Me?

This action is directed to the public in general. Although this action may be of particular interest to persons who produce or use pesticides, the Agency has not attempted to describe all the specific entities that may be affected by this action. If you have any questions regarding the information in this notice, consult the person listed under **FOR FURTHER INFORMATION CONTACT**.

B. What Should I Consider as I Prepare My Comments for EPA?

1. *Submitting CBI*. Do not submit this information to EPA through regulations.gov or e-mail. Clearly mark the part or all of the information that you claim to be CBI. For CBI information in a disk or CD ROM that you mail to EPA, mark the outside of the disk or CD ROM as CBI and then identify electronically within the disk or CD ROM the specific information that is claimed as CBI. In addition to one complete version of the comment that includes information claimed as CBI, a copy of the comment that does not contain the information claimed as CBI must be submitted for inclusion in the public docket. Information so marked will not be disclosed except in accordance with procedures set forth in 40 CFR part 2.

2. *Tips for preparing your comments*. When submitting comments, remember to:

i. Identify the document by docket ID number and other identifying information (subject heading, **Federal Register** date and page number).

ii. Follow directions. The Agency may ask you to respond to specific questions or organize comments by referencing a Code of Federal Regulations (CFR) part or section number.

iii. Explain why you agree or disagree; suggest alternatives and substitute language for your requested changes.

iv. Describe any assumptions and provide any technical information and/or data that you used.

v. If you estimate potential costs or burdens, explain how you arrived at your estimate in sufficient detail to allow for it to be reproduced.

vi. Provide specific examples to illustrate your concerns and suggest alternatives.

vii. Explain your views as clearly as possible, avoiding the use of profanity or personal threats.

viii. Make sure to submit your comments by the comment period deadline identified.

II. What Action is the Agency Taking?

This notice announces receipt by the Agency of applications from registrants to cancel 184 pesticide products registered under section 3 or 24(c) of FIFRA. These registrations are listed in sequence by registration number (or company number and 24(c) number) in the following Table 1:

TABLE 1.—REGISTRATIONS WITH PENDING REQUESTS FOR CANCELLATION

Registration no.	Product Name	Chemical Name
000004-00157	Bonide Vegetables and Fruit Trees Spray	Carbaryl
		Malathion
000004-00443	Micro Flow Slug N Snail Plus	Metaldehyde
		Carbaryl
000070-00165	Kill-Ko 10% Sevin Dust	Carbaryl
000241-00340	Pendulum WDG Herbicide	Pendimethalin
000241 OR-96-0026	Assert Herbicide	Imazamethabenz
000264-00661	Dropp Ultra	Diuron
		Thidiazuron
000264 OR-03-0014	Admire 2 Flowable	Imidacloprid
000264 WA-00-0001	Guthion Solupak 50% Wettable Powder Insecticide	Azinphos-Methyl
000264 WA-01-0031	Stratego Fungicide	Propiconazole
		Trifloxystrobin
000264 WA-01-0039	Axiom DF Herbicide	Metribuzin
		Flufenacet
000264 WA-02-0011	Axiom DF Herbicide	Metribuzin
		Flufenacet
000264 WA-84-0036	Di-Syston 8	Disulfoton
000264 WA-93-0003	Sencor DF 75% Dry Flowable Herbicide	Metribuzin
000264 WA-94-0041	Sencor DF 75% Dry Flowable Herbicide	Metribuzin
000264 WA-97-0003	Sencor DF 75% Dry Flowable Herbicide	Metribuzin
000264 WA-98-0004	Di-Syston 15% Granular Systemic Insecticide	Disulfoton
000279 WA-03-0009	Aim Herbicide	Carfentrazone-ethyl
000352 LA-03-0001	Dupont K-4 Herbicide	Diuron
		Hexazinone
000352 WA-00-0008	Dupont Oust Herbicide	Sulfometuron
000352 WA-93-0002	Dupont Krovar I DF Herbicide	Bromacil
		Diuron
000352 WA-95-0021	Dupont Oust Herbicide	Sulfometuron
000400-00438	Vitavax Extra	Thiabendazole
		Carboxin
		Imazalil

TABLE 1.—REGISTRATIONS WITH PENDING REQUESTS FOR CANCELLATION—Continued

Registration no.	Product Name	Chemical Name
000400-00439	Vitavax-Plus Flowable Fungicide	Thiabendazole
		Carboxin
000432-00892	Chipco Brand Three Herbicide	Benzoic acid, 3,6-dichloro-2-methoxy-, compd with N-methylmethanamine (1:1)
		MCPA, dimethylamine salt
		Mecoprop, dimethylamine salt
000432-01396	Vision Lawn Weed Eliminator Concentrate	Benzoic acid, 3,6-dichloro-2-methoxy-, compd with N-methylmethanamine (1:1)
		2,4-D, dimethylamine salt
		Mecoprop, dimethylamine salt
000432-01397	Vision Lawn Weed Eliminator Ready-To-Spray	Benzoic acid, 3,6-dichloro-2-methoxy-, compd with N-methylmethanamine (1:1)
		2,4-D, dimethylamine salt
		Mecoprop, dimethylamine salt
000432-01398	Vision Lawn Weed Eliminator Ready-To-Use	Benzoic acid, 3,6-dichloro-2-methoxy-, compd with N-methylmethanamine (1:1)
		2,4-D, dimethylamine salt
		Mecoprop, dimethylamine salt
000464-00703	Ucarcide 750 Antimicrobial	Glutaraldehyde
000464-00708	Piror 825 Slimicide	Glutaraldehyde
000464-00715	Ucarsan 442 Sanitizer	Glutaraldehyde
		Alkyl* dimethyl benzyl ammonium chloride *(50%C14, 40%C12, 10%C16)
000464-00716	Ucarsan 414 Sanitizer	Glutaraldehyde
		Alkyl* dimethyl benzyl ammonium chloride *(50%C14, 40%C12, 10%C16)
000524 ND-04-0006	RT Master II Herbicide	Glycine, N-(phosphonomethyl)- potassium salt
000524 SD-04-0009	RT Master II Herbicide	Glycine, N-(phosphonomethyl)- potassium salt
000769-00229	10% Sevin Dust	Carbaryl
000829-00211	SA-50 Brand Balfin Granules	Benfluralin
001381-00193	Tundra EC	Bifenthrin
001386-00587	Unico MCPA 4 Amine Weed Killer	MCPA, dimethylamine salt
001812-00455	Diuron Technical	Diuron
001812 FL-99-0002	Direx 80DF	Diuron
001812 HI-00-0002	Direx 4L	Diuron
001812 MS-01-0034	Direx 4L	Diuron
001812 MS-01-0035	Direx 80DF	Diuron
001812 TX-00-0011	Direx 80DF	Diuron
001812 WA-00-0019	Declare	Methyl parathion

TABLE 1.—REGISTRATIONS WITH PENDING REQUESTS FOR CANCELLATION—Continued

Registration no.	Product Name	Chemical Name
001812 WA-00-0036	Linex 50 DF	Gas cartRidge (as a device for burrowing animal control)
		Linuron
001812 WA-99-0034	Direx 80DF	Diuron
004581 WA-00-0012	Penncap-M Microencapsulated Insecticide	Methyl parathion
005481-00010	Alco Malathion 57 Spray Concentrate	Malathion
005481-00123	Durham Malathion EM-8	Malathion
005481-00136	Alco Malathion 5 Spray	Malathion
005481-00139	Alco Malathion 8 Spray	Malathion
005481-00210	Amvac Malathion 91% Technical	Malathion
005481-00238	50% Malathion Emulsifiable Concentrate	Malathion
005481-00242	Kon-Trold Roost Paint and Cage Spray	Carbaryl
		Malathion
005481-00259	Royal Brand Malathion 5-E	Malathion
005481-00275	Two Way Vegetable Dust	Carbaryl
		Malathion
007173 WA-78-0061	Rozol Paraffinized Pellets	Chlorophacinone
007401-00072	Ferti-Lome Improved Bug Bait	Metaldehyde
		Carbaryl
007401-00081	Ferti-Lome Carbaryl-Sulfur 10-40 Dust	Carbaryl
		Sulfur
007401-00083	Ferti-Lome Carbaryl Garden Spray	Carbaryl
007401-00148	Sevin and Molasses Insect Bait	Carbaryl
007401-00154	10% Sevin Dust	Carbaryl
007401-00210	Hi-Yield Sevin Emulisfiable Concentrate	Carbaryl
007401-00291	Hi-Yield Mater-Tater and Other Vegetable Dust	Carbaryl
007401-00310	Hi-Yield Sevin Plus Dipel Dust	Bacillus thuringiensis (Berliner)
		Carbaryl
007401-00334	Hi-Yield Sos Garden Dust	Carbaryl
		Sulfur
007401-00386	Ferti-Lome Gypsy Moth, Japanese Beetle and Pine Moth	Carbaryl
007401-00410	American Brand Oftanol Season Long White Grub Control	Isofenphos
008660-00006	Sta-Green Crabgrass Preventer with Fertilizer 25-3-3	Benfluralin
008660-00008	Sta-Green Pre-Emergence Crabgrass Preventer with Balan	Benfluralin
008660-00016	Sta-Green "C-G" Preventer Plus W/30-2-9 Fertilizer	Benfluralin

TABLE 1.—REGISTRATIONS WITH PENDING REQUESTS FOR CANCELLATION—Continued

Registration no.	Product Name	Chemical Name
		Oryzalin
008660-00019	Sta-Green Crabgrass Preventer Plus Lawn Fertilizer	Trifluralin
		Benfluralin
008660-00026	Vertagreen Weed and Feed for Professional Turf	Benfluralin
008660-00027	Vertagreen Crabgrass Preventer with Balan	Benfluralin
008660-00030	Vertagreen Fertilizer for Professional Turf w/ Balan	Benfluralin
008660-00037	Vertagreen Crabgrass Control	Benfluralin
008660-00038	Vertagreen Fertilizer for Prof. Use 22-3-9	Benfluralin
008660-00039	Vertagreen for Professional Use with Balan 16-6-8	Benfluralin
008660-00040	Vertagreen Crabgrass Preventer Plus Turf Food	Benfluralin
008660-00042	Vertagreen Lawn Food and Crabgrass Prevent. 25-3-5	Benfluralin
008660-00074	Pro-Teck with Balan	Benfluralin
008660-00096	Vertagreen for Professional Use w/balan 25% Granules	Benfluralin
008660-00099	Proteck-Plus_contains Balan	Benfluralin
008660-00104	Vertagreen Proteck 3-Way	Benzoic acid, 3,6-dichloro-2-methoxy-, compd with N-methylmethanamine (1:1)
		2,4-D, dimethylamine salt
		Benfluralin
008660-00107	Greenup Benefin - 10 Plus	Benfluralin
008660-00112	Vertagreen Fertilizer for Professional Use with Balan	Benfluralin
008660-00113	Vertagreen Fertilizer for Professional Use with Balan	Benfluralin
008660-00130	Turf-Pro Balan 2.5% Plus Pre-Emergent Herbicide Plus 30	Benfluralin
008660-00139	Vertagreen Fertilizer for Professional Use with Balan	Benfluralin
		Oryzalin
008660-00143	Vertagreen Fertilizer for Professional Use with Team	Trifluralin
		Benfluralin
008660-00146	Vertagreen Pre-Emergence Weed and Feed	Benfluralin
		Oryzalin
008660-00149	Vertagreen Lawn Food with Crabgrass Control	Trifluralin
		Benfluralin
008660-00151	Vertagreen for Professional Turf with Team	Trifluralin

TABLE 1.—REGISTRATIONS WITH PENDING REQUESTS FOR CANCELLATION—Continued

Registration no.	Product Name	Chemical Name
		Benfluralin
008660-00186	Gro-Tone Crabgrass Preventer Plus Lawn Fertilizer	Benfluralin
008660-00192	HWI R Your Link To Value R Lawn Fertilizer	Benfluralin
008660-00225	Premium Fairway Food with Crabgrass and POA	Benfluralin
008660-00227	Premium Green Turf Lawn Food with Weed Control II	MCPA, dimethylamine salt
		Dimethylamine 2-(2,4-dichlorophenoxy)propionate
		Mecoprop, dimethylamine salt
008660-00235	Vigoro Crabgrass Preventer Plus Lawn Fertilizer	Benfluralin
008660-00236	Vigoro Crabgrass Preventer Plus Lawn Food Northern Form	Benfluralin
008660-00237	Vigoro Crabgrass Preventer with Benefin	Benfluralin
008660-00238	Vigoro Deep Green Crabgrass Preventer + Lawnfood	Benfluralin
008660-00243	Vigoro Weed and Crabgrass Preventer contains Balan	Benfluralin
009198-00169	Andersons Golf Products Fluid Fungicide II	Triadimefon
		Metalaxyl
009198-00198	Proturf Fertilizer Plus Dicot Weed Control IV	MCPA (and salts and esters)
		Mecoprop (and salts and esters)
009779-00084	Riverside Diquick Herbicide	MSMA (and salts)
		Diuron
010163 OR-94-0053	Metasystox-R Spray Concentrate	Oxydemeton-methyl
010163 WA-00-0022	Prokil Dimethoate E267	Dimethoate
010404-00070	Eliminate 47% DG Selective Broadleaf Herbicide.	Dicamba
		MCPA (and salts and esters)
		Mecoprop (and salts and esters)
010707 OR-95-0002	Magnacide H Herbicide	Acrolein
012455 OR-05-0022	ZP Rodent Bait Ag	Zinc phosphide (Zn3P2)
019713-00095	Drexel Diazinon 14G	Diazinon
019713-00560	EPTC Technical	Carbamothioic acid, dipropyl-, S-ethyl ester
019713-00563	Eptam Technical	Carbamothioic acid, dipropyl-, S-ethyl ester
032802-00007	All Season Balan Granular 2.5G	Benfluralin
032802-00008	All Season Crabgrass Preventer Plus	Benfluralin
032802-00009	Crabgrass Preventer Plus Turf Food	Benfluralin
032802-00010	Benefin Plus 25-3-25 Fertilizer	Benfluralin
032802-00011	Benefin 1.3% Plus	Benfluralin

TABLE 1.—REGISTRATIONS WITH PENDING REQUESTS FOR CANCELLATION—Continued

Registration no.	Product Name	Chemical Name
032802-00024	Excel-N-Plus W/crabgrass Control + Lawn Food	Trifluralin
		Benfluralin
032802-00030	Excel-S-Plus	Benfluralin
		Oryzalin
032802-00033	Hi-Tech Crabgrass Control	Trifluralin
		Benfluralin
032802-00035	Lawn Service Crabgrass Control	Trifluralin
		Benfluralin
032802-00040	Proteck 58	Trifluralin
		Benfluralin
034704 OR-92-0019	Clean Crop Diuron 80 WDG Weed Killer	Diuron
034704 OR-94-0029	Clean Crop Diuron 80 WDG Weed Killer	Diuron
034704 WA-97-0001	Diazinon G-14	Diazinon
034913-00004	Sprakil D-8 Granular Weed Killer	Diuron
059623 CA-89-0021	Rodent Bait Block - Diphacinone Treated Grain/ Paraffin	Diphacinone
062719-00310	Diuron 80DF	Diuron
062719-00311	Diuron 4L Herbicide	Diuron
062719 OR-88-0012	Kelthane MF Agricultural Miticide	Dicofol
062719 OR-96-0037	Goal (r) 2XL Herbicide	Oxyfluorfen
062719 OR-97-0008	Goal (r) 2XL Herbicide	Oxyfluorfen
062719 OR-99-0043	Starane	Fluroxypyr
062719 WA-00-0011	Nu-Flow M Seed Treatment Fungicide	Myclobutanil
062719 WA-00-0029	Dithane DF Agricultural Fungicide	Mancozeb
062719 WA-02-0025	DMA 4 Herbicide	2,4-D, dimethylamine salt
062719 WA-96-0034	Goal (r) 2XL Herbicide	Oxyfluorfen
062719 WA-97-0024	Goal (r) 2XL Herbicide	Oxyfluorfen
066158 WA-92-0027	Di-Syston 15% Granular Systemic Insecticide	Disulfoton
066222-00017	Pyrinex Chlorpyrifos Termiticide Concentrate	Chlorpyrifos
066222-00067	Dynex Diuron Weed Killer Wettable Powder	Diuron
066222-00068	Dynex Liquid Diuron Weed Killer	Diuron
067650-00002	Eco Bran 2%	Carbaryl
067650-00003	Eco Bran 5%	Carbaryl
071711 CA-04-0017	Applaud 70WP Insect Growth Regulator	Buprofezin
073049-00093	SBP-1382/bioallethrin Insecticide Conc. 10%-10% Form	2-Methyl-4-oxo-3-(2-propenyl)-2-cyclopenten-1-yl d-trans-2,2-dimethyl-3-(2-methyl-1-propenyl
		Resmethrin

TABLE 1.—REGISTRATIONS WITH PENDING REQUESTS FOR CANCELLATION—Continued

Registration no.	Product Name	Chemical Name
073049-00094	Your Brand SBP-1382/Bioallethrin (.20%+.20%) Aqueous	2-Methyl-4-oxo-3-(2-propenyl)-2-cyclopenten-1-yl d-trans-2,2-dimethyl-3-(2-methyl-1-propenyl
		Resmethrin
073049-00096	SBP-1382/Bioallethrin Insecticide Concentrate 18%-48%	2-Methyl-4-oxo-3-(2-propenyl)-2-cyclopenten-1-yl d-trans-2,2-dimethyl-3-(2-methyl-1-propenyl
		Resmethrin
073049-00099	SBP-1382/Bioallethrin Insecticide Conc. 7.5%-5% Form	2-Methyl-4-oxo-3-(2-propenyl)-2-cyclopenten-1-yl d-trans-2,2-dimethyl-3-(2-methyl-1-propenyl
		Resmethrin
073049-00104	SBP-1382/Bioallethrin Insecticide Conc. 10.10%-67.28%	2-Methyl-4-oxo-3-(2-propenyl)-2-cyclopenten-1-yl d-trans-2,2-dimethyl-3-(2-methyl-1-propenyl
		Resmethrin
073049-00114	SBP-1382/Bioallethrin Concentrate 10-5	2-Methyl-4-oxo-3-(2-propenyl)-2-cyclopenten-1-yl d-trans-2,2-dimethyl-3-(2-methyl-1-propenyl
		Resmethrin
073049-00115	SBP-1382/Bioallethrin (0.20% + 0.10%) Aqueous Pressuriz	2-Methyl-4-oxo-3-(2-propenyl)-2-cyclopenten-1-yl d-trans-2,2-dimethyl-3-(2-methyl-1-propenyl
		Resmethrin
073049-00116	SBP-1382/Bioallethrin Concentrate 10-3.75	2-Methyl-4-oxo-3-(2-propenyl)-2-cyclopenten-1-yl d-trans-2,2-dimethyl-3-(2-methyl-1-propenyl
		Resmethrin
073049-00117	SBP 1382/Bioallethrin Concentrate 10-2.5	2-Methyl-4-oxo-3-(2-propenyl)-2-cyclopenten-1-yl d-trans-2,2-dimethyl-3-(2-methyl-1-propenyl
		Resmethrin
073049-00118	SBP-1382/Bioallethrin (0.20% + 0.075%) Aqueous Pressuri	2-Methyl-4-oxo-3-(2-propenyl)-2-cyclopenten-1-yl d-trans-2,2-dimethyl-3-(2-methyl-1-propenyl
		Resmethrin
073049-00119	SBP-1382/Bioallethrin (.2+.05) Aqueous Pressurized Spra	2-Methyl-4-oxo-3-(2-propenyl)-2-cyclopenten-1-yl d-trans-2,2-dimethyl-3-(2-methyl-1-propenyl
		Resmethrin
073049-00120	Bioram 7.5% - 12.5% Insecticide Concentrate	2-Methyl-4-oxo-3-(2-propenyl)-2-cyclopenten-1-yl d-trans-2,2-dimethyl-3-(2-methyl-1-propenyl
		Permethrin
073049-00121	Bioram 0.15% + 0.25% Insecticide Aqueous Pressurized Sp	2-Methyl-4-oxo-3-(2-propenyl)-2-cyclopenten-1-yl d-trans-2,2-dimethyl-3-(2-methyl-1-propenyl
		Permethrin
073049-00122	Bioram 10% - 10% Insecticide Concentrate	2-Methyl-4-oxo-3-(2-propenyl)-2-cyclopenten-1-yl d-trans-2,2-dimethyl-3-(2-methyl-1-propenyl
		Permethrin
073049-00123	Pramex/Bioallethrin Insecticide Aqueous Pressurized Spray	2-Methyl-4-oxo-3-(2-propenyl)-2-cyclopenten-1-yl d-trans-2,2-dimethyl-3-(2-methyl-1-propenyl
		Permethrin
073049-00127	SBP-1382/Bioallethrin (0.2 + 0.4) II Professional	2-Methyl-4-oxo-3-(2-propenyl)-2-cyclopenten-1-yl d-trans-2,2-dimethyl-3-(2-methyl-1-propenyl

TABLE 1.—REGISTRATIONS WITH PENDING REQUESTS FOR CANCELLATION—Continued

Registration no.	Product Name	Chemical Name
		Resmethrin
073049-00128	SBP-1382/Bioallethrin/Piperonyl Butoxide	2-Methyl-4-oxo-3-(2-propenyl)-2-cyclopenten-1-yl d-trans-2,2-dimethyl-3-(2-methyl-1-propenyl
		Piperonyl butoxide
		Resmethrin
073049-00129	SBP-1382/Bioallethrin 19.268-48.202 Concentrate	2-Methyl-4-oxo-3-(2-propenyl)-2-cyclopenten-1-yl d-trans-2,2-dimethyl-3-(2-methyl-1-propenyl
		Resmethrin
073049-00130	SBP-1382/Bioallethrin (0.10% + 0.25%) Aqueous Pressuriz	2-Methyl-4-oxo-3-(2-propenyl)-2-cyclopenten-1-yl d-trans-2,2-dimethyl-3-(2-methyl-1-propenyl
		Resmethrin
073049-00136	SBP-1382/Esbiothrin/P.B.O. Insect. Aq. Press. Spray O.2	Bioallethrin
		Piperonyl butoxide
		Resmethrin
073049-00137	SBP-1382/Esbiothrin/piperonyl Butoxide Insect. Conc. 5%	2-Methyl-4-oxo-3-(2-propenyl)-2-cyclopenten-1-yl d-trans-2,2-dimethyl-3-(2-methyl-1-propenyl
		Piperonyl butoxide
		Resmethrin
073049-00138	SBP-1382/Esbioth./Piper.Butox. Insect. Conc. 6.45%+6.45	2-Methyl-4-oxo-3-(2-propenyl)-2-cyclopenten-1-yl d-trans-2,2-dimethyl-3-(2-methyl-1-propenyl
		Piperonyl butoxide
		Resmethrin
073049-00139	SBP-1382/Esbiothrin/P.B.O. Insect. Aq. Press. Spray 0.2	2-Methyl-4-oxo-3-(2-propenyl)-2-cyclopenten-1-yl d-trans-2,2-dimethyl-3-(2-methyl-1-propenyl
		Piperonyl butoxide
		Resmethrin
073049-00141	SBP-1382/Esbiothrin/P.B.O. Insect. Conc. 8% - 7.8% - 31	2-Methyl-4-oxo-3-(2-propenyl)-2-cyclopenten-1-yl d-trans-2,2-dimethyl-3-(2-methyl-1-propenyl
		Piperonyl butoxide
		Resmethrin
073049-00150	SBP-1382/Bioallethrin/PBO Insecticide Conc. 11.9%-3.4%-	2-Methyl-4-oxo-3-(2-propenyl)-2-cyclopenten-1-yl d-trans-2,2-dimethyl-3-(2-methyl-1-propenyl
		Piperonyl butoxide
		Resmethrin
073049-00151	SBP-1382/Bioallethrin/pip.butox. Insecticide .35% + .10	Bioallethrin
		Piperonyl butoxide
		Resmethrin
073049-00249	Wipe and Spray Concentrate	Butoxypolypropylene glycol
		Piperonyl butoxide
		Pyrethrins

TABLE 1.—REGISTRATIONS WITH PENDING REQUESTS FOR CANCELLATION—Continued

Registration no.	Product Name	Chemical Name
073049-00272	Esbiothrin 7% Coil Base	2-Methyl-4-oxo-3-(2-propenyl)-2-cyclopenten-1-yl d-trans-2,2-dimethyl-3-(2-methyl-1-propenyl
073049-00279	Multi-Purpose Alleviate Insecticide Concentrate	2-Methyl-4-oxo-3-(2-propenyl)-2-cyclopenten-1-yl d-trans-2,2-dimethyl-3-(2-methyl-1-propenyl
		Piperonyl butoxide
073049-00280	Alleviate General Purpose Household Spray	2-Methyl-4-oxo-3-(2-propenyl)-2-cyclopenten-1-yl d-trans-2,2-dimethyl-3-(2-methyl-1-propenyl
		Piperonyl butoxide
073049-00281	Alleviate Garden Spray Concentrate	2-Methyl-4-oxo-3-(2-propenyl)-2-cyclopenten-1-yl d-trans-2,2-dimethyl-3-(2-methyl-1-propenyl
		Piperonyl butoxide
073049-00282	Alleviate Small Animal and Kennel Insecticide EC	2-Methyl-4-oxo-3-(2-propenyl)-2-cyclopenten-1-yl d-trans-2,2-dimethyl-3-(2-methyl-1-propenyl
		Piperonyl butoxide
073049-00283	Alleviate Oil Concentrate	2-Methyl-4-oxo-3-(2-propenyl)-2-cyclopenten-1-yl d-trans-2,2-dimethyl-3-(2-methyl-1-propenyl
		Piperonyl butoxide
073049-00284	Alleviate General Purpose Spray	2-Methyl-4-oxo-3-(2-propenyl)-2-cyclopenten-1-yl d-trans-2,2-dimethyl-3-(2-methyl-1-propenyl
		Piperonyl butoxide
073049-00288	Alleviate W.B. Concentrate	2-Methyl-4-oxo-3-(2-propenyl)-2-cyclopenten-1-yl d-trans-2,2-dimethyl-3-(2-methyl-1-propenyl
		Piperonyl butoxide
073049-00294	Alleviate Aqueous I	2-Methyl-4-oxo-3-(2-propenyl)-2-cyclopenten-1-yl d-trans-2,2-dimethyl-3-(2-methyl-1-propenyl
		Piperonyl butoxide
073049-00356	SBP-1382 Bioallethrin(.20% + .40%) Aqueous Pressurized	2-Methyl-4-oxo-3-(2-propenyl)-2-cyclopenten-1-yl d-trans-2,2-dimethyl-3-(2-methyl-1-propenyl
		Resmethrin
073049 WA-04-0029	Novodor Biological Insecticide Flowable Concentrate	Bacillus thuringiensis subsp. tenebrionis

A request to waive the 180–day comment period has been received for the following registrations: 7401-72, 7401-81, 7401-83, 7401-148, 7401-154, 7401-210, 7401-291, 7401-310, 7401-334, 7401-386, 73049-93, 73049-94, 73049-96, 73049-99, 73049-104, 73049-114, 73049-115, 73049-116, 73049-117, 73049-118, 73049-119, 73049-120, 73049-121, 73049-122, 73049-123, 73049-127, 73049-128, 73049-129, 73049-130, 73049-136, 73049-137, 73049-138, 73049-139, 73049-141, 73049-150, 73049-151, 73049-249, 73049-272, 73049-279, 73049-280, 73049-281, 73049-282, 73049-283, 73049-284, 73049-288, 73049-294, 73049-356. Therefore, the 30–day comment period will apply for these registrations.

Unless a request is withdrawn by the registrant by December 26, 2006 or by July 28, 2006 for those registrations with a 30–day comment period, orders will be issued canceling all of these registrations. A person may submit comments to EPA as provided in **ADDRESSES** and Unit I. of the **SUPPLEMENTARY INFORMATION** above. However, because FIFRA section 6(f)(1)(A) allows a registrant to request cancellation of its pesticide registrations at any time, users or anyone else desiring retention of those pesticides listed in Table 1 may want to contact the applicable registrant in Table 2 directly during this period to request that the registrant retain the pesticide registration or to discuss the possibility of transferring the registration. A user seeking to apply for its own registration of that pesticide may submit comments requesting EPA not to cancel a registration until its ''me-too'' registration is granted.

Table 2 of this unit includes the names and addresses of record for all registrants of the products in Table 1 of this unit, in sequence by EPA company number:

TABLE 2—REGISTRANTS REQUESTING VOLUNTARY CANCELLATION

EPA Company no.	Company Name and Address
000004	Bonide Products,Inc., 6301 Sutliff Rd., Oriska, NY 13424.
000070	Value Gardens Supply, LLC, d/b/a Garden Value Supply, PO Box 585, Saint Jose, MO 64502.
000241	BASF Corp., PO Box 13528, Research Triangle Pa, NC 277093528.
000264	Bayer Cropscience LP, 2 T.W. Alexander Drive, Research Triangle Pa, NC 27709.
000279	FMC Corp. Agricultural Products Group, 1735 Market St, Philadelph, PA 19103.
000352	E.I. Du Pont De Nemours, Inc., Dupont Crop Protection (S300/427), Po Box 30, Newa, DE 197140030.
000400	Chemtura USA Corp., Attn: Willard F. Cummings (mail Code 2-4), Middlebu, CT 06749.
000432	Bayer Environmental Science, A Business Group of Bayer Cropscience LP, PO Box 12014, Research Triangle Pa, NC 27709.
000464	Dow Chemical Co., The, Attn: George Paul, 1803 Building, Midla, MI 48674.
000524	Monsanto Co, Agent For: Monsanto Co., 1300 I Street, Nw, Suite 450 E., Washingt, DC 20005.
000769	Value Gardens Supply, LLC, d/b/a Value Garden Supply, PO Box 585, Saint Jose, MO 64502.
000829	Southern Agricultural Insecticides, Inc., PO Box 218, Palmet, FL 34220.
001381	Agriliance, LLC, PO Box 64089, St. Pa, MN 551640089.
001386	Universal Cooperatives Inc., 1300 Corporate Center Curve, Eag, MN 55121.
001812	Dupont Crop Protection/Stine-Haskell Research Center, Agent For: Griffin L.L.C., PO Box 30, Newa, DE 197140030.
004581	Cerexagri, Inc., 630 Freedom Business Center, Suite 402, King Of Pruss, PA 19406.

TABLE 2—REGISTRANTS REQUESTING VOLUNTARY CANCELLATION—Continued

EPA Company no.	Company Name and Address
005481	Amvac Chemical Corp., Attn: Jon C. Wood, 4695 Macarthur Ct., Suite 1250, Newport Bea, CA 926601706.
007173	Liphatech, Inc., 3600 W. Elm Street, Milwauk, WI 53209.
007401	Brazos Associates, Inc., Agent For: Voluntary Purchasing Group Inc., 1806 Auburn Drive, Carrollt, TX 750071451.
008660	United Industries Corp., d/b/a Sylorr Plant Corp., PO Box 142642, St. Lou, MO 631140642.
009198	The Andersons Lawn Fertilizer Division, Inc., dba/ Free Flow Fertilizer, PO Box 119, Maum, OH 43537.
009779	Agriliance, LLC, PO Box 64089, St Pa, MN 551640089.
010163	Gowan Co, PO Box 5569, Yu, AZ 853665569.
010404	Lesco Inc., 1301 E. 9th Street, Suite 1300, Clevela, OH 441141849.
010707	Baker Petrolite Corp., 12645 W. Airport Blvd., Sugar La, TX 77478.
012455	Bell Laboratories Inc., 3699 Kinsman Blvd, Madis, WI 53704.
019713	Drexel Chemical Co., PO Box 13327, Memph, TN 381130327.
032802	Howard Johnson's Enterprises Inc., 700 W. Virginia St Ste 222, Milwauk, WI 532041548.
034704	Loveland Products, Inc., PO Box 1286, Greel, CO 80632.
034913	SSI Maxim Co., Inc., PO Box 1954, Kilgo, TX 75663.
059623	California Dept. of Food and Agriculture, Office of Pesticide Consultation and Analysis, 1220 N Street, Sacramen, CA 95814.
062719	Dow Agrosciences LLC, 9330 Zionsville Rd 308/2E, Indianapol, IN 462681054.
066158	Columbia Basin Vegetable Seed Assn, PO Box 53, Quin, WA 98848.

TABLE 2—REGISTRANTS REQUESTING VOLUNTARY CANCELLATION—Continued

EPA Company no.	Company Name and Address
066222	Makhteshim-Agan of North America Inc., 4515 Falls of Neuse Rd Ste 300, Ralei, NC 27609.
067650	John W. Kennedy Consultants, Agent For: Peacock Industries (US) Inc., 101 Beachside Drive, Stevensvil, MD 21666.
071711	Nichino America, Inc., 4550 New Linden Hill Rd., Suite 501, Wilmingt, DE 19808.
073049	Valent Biosciences Corp., 870 Technology Way, Suite 100, Libertyvil, IL 600486316.

III. What is the Agency's Authority for Taking this Action?

Section 6(f)(1)(A) of FIFRA provides that a registrant of a pesticide product may at any time request that any of its pesticide registrations be canceled. FIFRA further provides that, before acting on the request, EPA must publish a notice of receipt of any such request in the **Federal Register** and provide for a 30–day public comment period. In addition, where a pesticide is registered for a minor agricultural use and the Administrator determines that cancellation or termination of that use would adversely affect the availability of the pesticide for use, FIFRA section 6(f)(1)(C) requires EPA to provide a 180–day period before approving or rejecting the section 6(f) request unless:

1. The registrant requests a waiver of the 180–day period, or

2. The Administrator determines that continued use of the pesticide would pose an unreasonable adverse effect on the environment.

IV. Procedures for Withdrawal of Request

Registrants who choose to withdraw a request for cancellation must submit such withdrawal in writing to the person listed under **FOR FURTHER INFORMATION CONTACT**, postmarked before December 26, 2006 or before July 28, 2006 for those registrations where the 180–day comment period has been waived. This written withdrawal of the request for cancellation will apply only to the applicable FIFRA section 6(f)(1) request listed in this notice. If the product(s) have been subject to a previous cancellation action, the effective date of cancellation and all other provisions of any earlier cancellation action are controlling. The

withdrawal request must also include a commitment to pay any reregistration fees due, and to fulfill any applicable unsatisfied data requirements.

V. Provisions for Disposition of Existing Stocks

The effective date of cancellation will be the date of the cancellation order. The orders effecting these requested cancellations will generally permit a registrant to sell or distribute existing stocks for 1 year after the date the cancellation request was received. This policy is in accordance with the Agency's statement of policy as prescribed in the **Federal Register** of June 26, 1991 (56 FR 29362) (FRL–3846–4). Exceptions to this general rule will be made if a product poses a risk concern, or is in noncompliance with reregistration requirements, or is subject to a data call-in. In all cases, product-specific disposition dates will be given in the cancellation orders.

Existing stocks are those stocks of registered pesticide products which are currently in the United States and which have been packaged, labeled, and released for shipment prior to the effective date of the cancellation action. Unless the provisions of an earlier order apply, existing stocks already in the hands of dealers or users can be distributed, sold, or used legally until they are exhausted, provided that such further sale and use comply with the EPA-approved label and labeling of the affected product. Exception to these general rules will be made in specific cases when more stringent restrictions on sale, distribution, or use of the products or their ingredients have already been imposed, as in a Special Review action, or where the Agency has identified significant potential risk concerns associated with a particular chemical.

List of Subjects

Environmental protection, Pesticides and pests.

Dated: June 16, 2006.

Robert Forrest,

Acting Director, Information Technology and Resources Management Division, Office of Pesticide Programs.

[FR Doc. 06–5674 Filed 6–27–06; 8:45 am]

BILLING CODE 6560–50–S

ENVIRONMENTAL PROTECTION AGENCY

[EPA–HQ–OPP–2004–0032; FRL–8064–2]

Formetanate Hydrochloride Interim Reregistration Eligibility Decision; Notice of Availability

AGENCY: Environmental Protection Agency (EPA).

ACTION: Notice.

SUMMARY: This notice announces the availability of EPA's Interim Reregistration Eligibility Decision (IRED) for the N-methyl carbamate pesticide formetanate hydrochloride (formetanate HCl), and opens a public comment period on this document. The Agency's risk assessments and other related documents also are available in the formetanate HCl Docket. Formetanate HCl, a miticide/insecticide, is used on orchard crops and alfalfa grown for seed. EPA has reviewed formetanate HCl through the public participation process that the Agency uses to involve the public in developing pesticide reregistration and tolerance reassessment decisions. Through these programs, EPA is ensuring that all pesticides meet current health and safety standards.

DATES: Comments must be received on or before August 28, 2006.

ADDRESSES: Submit your comments, identified by docket identification (ID) number EPA–HQ–OPP–2004–0032, by one of the following methods:

• Federal eRulemaking Portal: *http://www.regulations.gov*. Follow the on-line instructions for submitting comments.

• *Mail*: Office of Pesticide Programs (OPP) Regulatory Public Docket (7502P), Environmental Protection Agency, 1200 Pennsylvania Ave., NW, Washington, DC 20460-0001.

• *Delivery*: OPP Regulatory Public Docket (7502P), Environmental Protection Agency, Rm. S-4400, One Potomac Yard (South Building), 2777 S. Crystal Drive, Arlington, VA. Deliveries are only accepted during the Docket's normal hours of operation (8:30 a.m. to 4 p.m., Monday through Friday, excluding legal holidays). Special arrangements should be made for deliveries of boxed information. The Docket telephone number is (703) 305-5805.

Instructions: Direct your comments to docket ID number EPA–HQ–OPP–2004–0032. EPA's policy is that all comments received will be included in the docket without change and may be made available on-line at *http://www.regulations.gov*, including any personal information provided, unless the comment includes information claimed to be Confidential Business Information (CBI) or other information whose disclosure is restricted by statute. Do not submit information that you consider to be CBI or otherwise protected through regulations.gov or e-mail. The Federal regulations.gov website is an ''anonymous access'' system, which means EPA will not know your identity or contact information unless you provide it in the body of your comment. If you send an e-mail comment directly to EPA without going through regulations.gov, your e-mail address will be automatically captured and included as part of the comment that is placed in the docket and made available on the Internet. If you submit an electronic comment, EPA recommends that you include your name and other contact information in the body of your comment and with any disk or CD-ROM you submit. If EPA cannot read your comment due to technical difficulties and cannot contact you for clarification, EPA may not be able to consider your comment. Electronic files should avoid the use of special characters, any form of encryption, and be free of any defects or viruses.

Docket: All documents in the docket are listed in the docket index. Although listed in the index, some information is not publicly available, e.g., CBI or other information whose disclosure is restricted by statute. Certain other material, such as copyrighted material, is not placed on the Internet and will be publicly available only in hard copy form. Publicly available docket materials are available either in the electronic docket at *http://www.regulations.gov*,or, if only available in hard copy, at the OPP Regulatory Public Docket in Rm. S-4400, One Potomac Yard (South Building), 2777 S. Crystal Drive, Arlington, VA. The hours of operation of this Docket Facility are from 8:30 a.m. to 4 p.m., Monday through Friday, excluding legal holidays. The Docket telephone number is (703) 305-5805.

FOR FURTHER INFORMATION CONTACT: Demson Fuller, Special Review and Reregistration Division (7508P), Office of Pesticide Programs, Environmental Protection Agency, 1200 Pennsylvania Ave., NW., Washington, DC 20460-0001; telephone number: (703) 308-8062; fax number: (703) 308-7070; e-mail address: *fuller.demson@epa.gov*.

SUPPLEMENTARY INFORMATION:

I. General Information

A. Does this Action Apply to Me?

This action is directed to the public in general, and may be of interest to a wide range of stakeholders including environmental, human health, and agricultural advocates; the chemical industry; pesticide users; and members of the public interested in the sale, distribution, or use of pesticides. Since others also may be interested, the Agency has not attempted to describe all the specific entities that may be affected by this action. If you have any questions regarding the applicability of this action to a particular entity, consult the person listed under **FOR FURTHER INFORMATION CONTACT**.

B. What Should I Consider as I Prepare My Comments for EPA?

1. *Submitting CBI*. Do not submit this information to EPA through regulations.gov or e-mail. Clearly mark the part or all of the information that you claim to be CBI. For CBI information in a disk or CD ROM that you mail to EPA, mark the outside of the disk or CD ROM as CBI and then identify electronically within the disk or CD ROM the specific information that is claimed as CBI. In addition to one complete version of the comment that includes information claimed as CBI, a copy of the comment that does not contain the information claimed as CBI must be submitted for inclusion in the public docket. Information so marked will not be disclosed except in accordance with procedures set forth in 40 CFR part 2.

2. *Tips for preparing your comments*. When submitting comments, remember to:

i. Identify the document by docket ID number and other identifying information (subject heading, **Federal Register** date and page number).

ii. Follow directions. The Agency may ask you to respond to specific questions or organize comments by referencing a Code of Federal Regulations (CFR) part or section number.

iii. Explain why you agree or disagree; suggest alternatives and substitute language for your requested changes.

iv. Describe any assumptions and provide any technical information and/or data that you used.

v. If you estimate potential costs or burdens, explain how you arrived at your estimate in sufficient detail to allow for it to be reproduced.

vi. Provide specific examples to illustrate your concerns and suggest alternatives.

vii. Explain your views as clearly as possible, avoiding the use of profanity or personal threats.

viii. Make sure to submit your comments by the comment period deadline identified.

II. Background

A. What Action is the Agency Taking?

Under section 4 of the Federal Insecticide, Fungicide, and Rodenticide Act (FIFRA), EPA is reevaluating existing pesticides to ensure that they meet current scientific and regulatory standards. EPA completed an IRED for the N-methyl carbamate pesticide formetanate HCl on March 15, 2006, and is now issuing this document for public comment. Formetanate HCl, a miticide/insecticide, is used on orchard crops and alfalfa grown for seed. The formetanate HCl IRED presents the Agency's conclusions on the risks posed by exposure to formetanate HCl alone; however, section 408(b)(2)(D)(v) of the Federal Food, Drug and Cosmetic Act (FFDCA) directs the Agency also to consider available information on the cumulative risk from substances sharing a common mechanism of toxicity. Because the N-methyl carbamate pesticides share a common mechanism of toxicity, the Agency will evaluate the cumulative risk posed by this group before making final reregistration eligibility decisions on individual N-methyl carbamates.

During the pendency of the N-methyl carbamate cumulative assessment, the Agency is proceeding with risk assessments and interim risk management for individual N-methyl carbamate pesticides. While EPA has not yet completed its cumulative risk assessment for the N-methyl carbamates, cumulative risks of these chemicals will be considered in the future. At that time, the Agency's final tolerance reassessment and reregistration decisions for formetanate HCl and the other N-methyl carbamates will be issued. Upon submission of any required product specific data under section 4(g) (2) (B) and any necessary changes to the registration and labeling (either to address concerns identified in the IRED or as a result of product specific data), and after assessing N-methyl carbamate cumulative risks, EPA will make a final reregistration decision under section 4(g) (2) (C) for products containing formetanate HCl. When the Agency finalizes decisions for formetanate HCl and other N-methyl carbamate pesticides, further risk mitigation may be required for formetanate HCl.

EPA is applying the principles of public participation to all pesticides undergoing reregistration and tolerance reassessment. The Agency's Pesticide Tolerance Reassessment and Reregistration; Public Participation Process, published in the **Federal Register** on May 14, 2004, (69 FR 26819)(FRL–7357–9) explains that in conducting these programs, EPA is tailoring its public participation process to be commensurate with the level of risk, extent of use, complexity of issues, and degree of public concern associated with each pesticide. Due to its uses, risks, and other factors, formetanate HCl was reviewed through the modified 4 phase public participation process. Through this process, EPA worked extensively with stakeholders and the public to reach the regulatory decisions for formetanate HCl.

The reregistration program is being conducted under Congressionally mandated time frames, and EPA recognizes the need both to make timely reregistration decisions and to involve the public. The Agency is issuing the formetanate HCl IRED for public comment. This comment period is intended to provide an additional opportunity for public input and a mechanism for initiating any necessary amendments to the IRED. All comments should be submitted using the methods in **ADDRESSES**, and must be received by EPA on or before the closing date. These comments will become part of the Agency Docket for formetanate HCl. Comments received after the close of the comment period will be marked ''late.'' EPA is not required to consider these late comments.

The Agency will carefully consider all comments received by the closing date and will provide a Response to Comments Memorandum in the Docket and regulations.gov. If any comment significantly affects the document, EPA also will publish an amendment to the IRED in the **Federal Register**. In the absence of substantive comments requiring changes, the risk management decisions reflected in the formetanate HCl IRED will be implemented as presented. These decisions may be supplemented by further risk mitigation measures when EPA considers its cumulative assessment of the N-methyl carbamate pesticides.

B. What is the Agency's Authority for Taking this Action?

Section 4(g)(2) of FIFRA as amended directs that, after submission of all data concerning a pesticide active ingredient,'' the Administrator shall determine whether pesticides containing such active ingredient are

eligible for reregistration,'' before calling in product specific data on individual end-use products and either reregistering products or taking other ''appropriate regulatory action.''

List of Subjects

Environmental protection, Pesticides and pests.

Dated: June 20, 2006.

Debra Edwards,

Director, Special Review and Reregistration Division, Office of Pesticide Programs.

[FR Doc. 06–5837 Filed 6–27–06; 8:45 am]

BILLING CODE 6560–50–S

ENVIRONMENTAL PROTECTION AGENCY

[EPA–HQ–OPP–2006–0294; FRL–8059–3]

Naptalam Sodium; Reregistration Eligibility Decision for Low Risk Pesticide; Notice of Availability

AGENCY: Environmental Protection Agency (EPA).

ACTION: Notice.

SUMMARY: This notice announces the availability of EPA's Reregistration Eligibility Decision (RED) for the pesticide naptalam sodium, and opens a public comment period on this document, related risk assessments, and other support documents. EPA has reviewed the low risk pesticide naptalam sodium through a modified, streamlined version of the public participation process that the Agency uses to involve the public in developing pesticide reregistration and tolerance reassessment decisions. Through these programs, EPA is ensuring that all pesticides meet current health and safety standards.

DATES: Comments must be received on or before August 28, 2006.

ADDRESSES: Submit your comments, identified by docket identification (ID) number EPA–HQ–OPP–2006–0294, by one of the following methods:

- Federal eRulemaking Portal: *http://www.regulations.gov*. Follow the on-line instructions for submitting comments.
- *Mail*: Office of Pesticide Programs (OPP) Regulatory Public Docket (7502P), Environmental Protection Agency, 1200 Pennsylvania Ave., NW., Washington, DC 20460–0001.
- *Delivery*: OPP Regulatory Public Docket (7502P), Environmental Protection Agency, Rm. S-4400, One Potomac Yard (South Building), 2777 S. Crystal Drive, Arlington, VA. Deliveries are only accepted during the Docket's normal hours of operation (8:30 a.m. to 4 p.m., Monday through Friday, excluding legal holidays). Special arrangements should be made for deliveries of boxed information. The Docket telephone number is (703) 305–5805.

Instructions: Direct your comments to docket ID number EPA–HQ–OPP–2006–0294. EPA's policy is that all comments received will be included in the docket without change and may be made available on-line at *http://www.regulations.gov*, including any personal information provided, unless the comment includes information claimed to be Confidential Business Information (CBI) or other information whose disclosure is restricted by statute. Do not submit information that you consider to be CBI or otherwise protected through regulations.gov or e-mail. The Federal regulations.gov website is an ''anonymous access'' system, which means EPA will not know your identity or contact information unless you provide it in the body of your comment. If you send an e-mail comment directly to EPA without going through regulations.gov, your e-mail address will be automatically captured and included as part of the comment that is placed in the docket and made available on the Internet. If you submit an electronic comment, EPA recommends that you include your name and other contact information in the body of your comment and with any disk or CD-ROM you submit. If EPA cannot read your comment due to technical difficulties and cannot contact you for clarification, EPA may not be able to consider your comment. Electronic files should avoid the use of special characters, any form of encryption, and be free of any defects or viruses.

Docket: All documents in the docket are listed in the docket index. Although listed in the index, some information is not publicly available, e.g., CBI or other information whose disclosure is restricted by statute. Certain other material, such as copyrighted material, is not placed on the Internet and will be publicly available only in hard copy form. Publicly available docket materials are available either in the electronic docket at *http://www.regulations.gov*, or, if only available in hard copy, at the OPP Regulatory Public Docket in Rm. S-4400, One Potomac Yard (South Building), 2777 S. Crystal Drive, Arlington, VA. The hours of operation of this Docket Facility are from 8:30 a.m. to 4 p.m., Monday through Friday, excluding legal holidays. The Docket telephone number is (703) 305–5805.

FOR FURTHER INFORMATION CONTACT: Mark Perry, Special Review and Reregistration Division (7508P), Office of Pesticide Programs, Environmental Protection Agency, 1200 Pennsylvania Ave., NW.,Washington, DC 20460–0001; telephone number: (703) 308–8024; fax number: (703) 308–7070; e-mail address: *perry.mark@epa.gov.*

SUPPLEMENTARY INFORMATION:

I. General Information

A. Does this Action Apply to Me?

This action is directed to the public in general, and may be of interest to a wide range of stakeholders including environmental, human health, and agricultural advocates; the chemical industry; pesticide users; and members of the public interested in the sale, distribution, or use of pesticides. Since others also may be interested, the Agency has not attempted to describe all the specific entities that may be affected by this action. If you have any questions regarding the applicability of this action to a particular entity, consult the person listed under **FOR FURTHER INFORMATION CONTACT**.

B. What Should I Consider as I Prepare My Comments for EPA?

1. *Submitting CBI.* Do not submit this information to EPA through regulations.gov or e-mail. Clearly mark the part or all of the information that you claim to be CBI. For CBI information in a disk or CD ROM that you mail to EPA, mark the outside of the disk or CD ROM as CBI and then identify electronically within the disk or CD ROM the specific information that is claimed as CBI. In addition to one complete version of the comment that includes information claimed as CBI, a copy of the comment that does not contain the information claimed as CBI must be submitted for inclusion in the public docket. Information so marked will not be disclosed except in accordance with procedures set forth in 40 CFR part 2.

2. *Tips for preparing your comments.* When submitting comments, remember to:

i. Identify the document by docket ID number and other identifying information (subject heading, **Federal Register** date and page number).

ii. Follow directions. The Agency may ask you to respond to specific questions or organize comments by referencing a Code of Federal Regulations (CFR) part or section number.

iii.Explain why you agree or disagree; suggest alternatives and substitute language for your requested changes.

iv. Describe any assumptions and provide any technical information and/or data that you used.

v. If you estimate potential costs or burdens, explain how you arrived at your estimate in sufficient detail to allow for it to be reproduced.

vi. Provide specific examples to illustrate your concerns and suggest alternatives.

vii. Explain your views as clearly as possible, avoiding the use of profanity or personal threats.

viii. Make sure to submit your comments by the comment period deadline identified.

II. Background

A. What Action is the Agency Taking?

Under section 4 of the Federal Insecticide, Fungicide, and Rodenticide Act (FIFRA), EPA is reevaluating existing pesticides to ensure that they meet current scientific and regulatory standards. Using a modified, streamlined version of its public participation process, EPA has completed a RED for the low risk pesticide, naptalam sodium under section 4(g)(2)(A) of FIFRA. Naptalam sodium is registered for use as liquid as a pre-emergent herbicide for control of broadleaf weeds in cucurbits and woody nursery stock. Naptalam sodium may be applied as a broadcast application at planting and/or over the top of the cucurbits in the early season before they begin to vine. For weed control in woody nursery stock, the product label indicates that it may be applied as a broadcast spray prior to transplanting or as a soil-directed spray around established stock. For both cucurbits and woody nursery stock application, the product label recommends watering-in following application. EPA has determined that the data base to support reregistration is substantially complete and that products containing naptalam sodium will be eligible for reregistration, provided the risks are mitigated either in the manner described in the RED or by another means that achieves equivalent risk reduction. Upon submission of any required product-specific data under section 4(g)(2)(B) and any necessary changes to the registration and labeling (either to address any concerns identified in the RED or as a result of product-specific data), EPA will make a final reregistration decision under section 4(g)(2)(C) for products containing naptalam sodium.

EPA must review tolerances and tolerance exemptions that were in effect when the Food Quality Protection Act (FQPA) was enacted in August 1996, to ensure that these existing pesticide residue limits for food and feed commodities meet the safety standard established by the new law. Tolerances are considered reassessed once the safety finding has been made or a revocation occurs. EPA has reviewed and made the requisite safety finding for the naptalam sodium tolerances included in this notice.

Although the naptalam sodium RED was signed on September 30, 2004, certain components of the document, which did not affect the final regulatory decision, were undergoing final editing at that time. These components, including the list of additional generic data requirements, summary of labeling changes, appendices, and other relevant information, have been added to the naptalam sodium RED document. In addition, subsequent to signature, EPA identified several minor errors and ambiguities in the document. Therefore, for the sake of accuracy, the Agency also has included the appropriate error corrections, amendments, and clarifications. None of these additions or changes alter the conclusions documented in the September 30, 2004, naptalam sodium RED. All of these changes are described in detail in an errata memorandum which is included in the public docket for naptalam sodium.

EPA is applying the principles of public participation to all pesticides undergoing reregistration and tolerance reassessment. The Agency's Pesticide Tolerance Reassessment and Reregistration; Public Participation Process, published in the **Federal Register** on May 14, 2004 (69 FR 26819) (FRL–7357–9), explains that in conducting these programs, the Agency is tailoring its public participation process to be commensurate with the level of risk, extent of use, complexity of issues, and degree of public concern associated with each pesticide. EPA can expeditiously reach decisions for pesticides like naptalam sodium, which pose few risk concerns, have low use, affect few if any stakeholders, and require little risk mitigation. Once EPA assesses uses and risks for such low risk pesticides, the Agency may go directly to a decision and prepare a document summarizing its findings, such as the naptalam sodium RED.

The reregistration program is being conducted under Congressionally mandated time frames, and EPA recognizes the need both to make timely decisions and to involve the public in finding ways to effectively mitigate pesticide risks. Naptalam sodium, however, poses few or no risks that require mitigation. The Agency therefore is issuing the naptalam sodium RED, its risk assessments, and related support materials simultaneously for public comment. The comment period is intended to provide an opportunity for public input and a mechanism for initiating any necessary amendments to the RED. All comments should be submitted using the methods in **ADDRESSES**, and must be received by EPA on or before the closing date. These comments will become part of the Agency Docket for naptalam sodium. Comments received after the close of the comment period will be marked ''late.'' EPA is not required to consider these late comments.

EPA will carefully consider all comments received by the closing date and will provide a Response to Comments Memorandum in the Docket and regulations.gov. If any comment significantly affects the document, EPA also will publish an amendment to the RED in the **Federal Register**. In the absence of substantive comments requiring changes, the naptalam sodium RED will be implemented as it is now presented.

B. What is the Agency's Authority for Taking this Action?

Section 4(g)(2) of FIFRA as amended directs that, after submission of all data concerning a pesticide active ingredient, ''the Administrator shall determine whether pesticides containing such active ingredient are eligible for reregistration,'' before calling in product-specific data on individual end-use products and either reregistering products or taking other ''appropriate regulatory action.''

Section 408(q) of the Federal Food, Drug, and Cosmetic Act (FFDCA), 21 U.S.C. 346a(q), requires EPA to review tolerances and exemptions for pesticide residues in effect as of August 2, 1996, to determine whether the tolerance or exemption meets the requirements of section 408(b)(2) or (c)(2) of FFDCA. This review is to be completed by August 3, 2006.

List of Subjects

Environmental protection, Pesticides and pests.

Dated: June 19, 2006.

Debra Edwards,

Director, Special Review and Reregistration Division, Office of Pesticide Programs.

[FR Doc. 06–5862 Filed 6–27–06; 8:45 am]

BILLING CODE 6560–50–S

ENVIRONMENTAL PROTECTION AGENCY

[EPA–HQ–OPP–2004–0385; FRL–8074–5]

Permethrin Reregistration Eligibility Decision; Notice of Availability

AGENCY: Environmental Protection Agency (EPA).

ACTION: Notice.

SUMMARY: This notice announces the availability of EPA's Reregistration Eligibility Decision (RED) for the pesticide permethrin, and opens a public comment period on this document. The Agency's risk assessments and other related documents also are available in the permethrin Docket. Permethrin is part of the pyrethroid class of pesticides and was first registered in 1979. It is a broad spectrum, non-systemic, synthetic pyrethroid insecticide, and is registered for use on numerous food/feed crops, livestock and livestock housing, modes of transportation, structures, buildings, Public Health Mosquito abatement programs, numerous indoor and outdoor residential spaces, pets, and clothing. EPA has reviewed permethrin through the public participation process that the Agency uses to involve the public in developing pesticide reregistration and tolerance reassessment decisions. Through these programs, EPA is ensuring that all pesticides meet current health and safety standards.

DATES: Comments must be received on or before September 26, 2006.

ADDRESSES: Submit your comments, identified by docket identification (ID) number EPA–HQ–OPP–2004–0385, by one of the following methods:

• Federal eRulemaking Portal: *http://www.regulations.gov*. Follow the on-line instructions for submitting comments.

• *Mail*: Office of Pesticide Programs (OPP) Regulatory Public Docket (7502P), Environmental Protection Agency, 1200 Pennsylvania Ave., NW., Washington, DC 20460-0001.

• *Delivery*: OPP Regulatory Public Docket (7502P), Environmental Protection Agency, Rm. S-4400, One Potomac Yard (South Building), 2777 S. Crystal Drive, Arlington, VA. Deliveries are only accepted during the Docket's normal hours of operation (8:30 a.m. to 4 p.m., Monday through Friday, excluding legal holidays). Special arrangements should be made for deliveries of boxed information. The Docket telephone number is (703) 305-5805.

Instructions: Direct your comments to docket ID number EPA–HQ–OPP–2004–0385. EPA's policy is that all comments received will be included in the docket without change and may be made available on-line at *http://www.regulations.gov*, including any personal information provided, unless the comment includes information claimed to be Confidential Business Information (CBI) or other information whose disclosure is restricted by statute. Do not submit information that you consider to be CBI or otherwise protected through regulations.gov or e-mail. The Federal regulations.gov website is an ''anonymous access'' system, which means EPA will not know your identity or contact information unless you provide it in the body of your comment. If you send an e-mail comment directly to EPA without going through regulations.gov, your e-mail address will be automatically captured and included as part of the comment that is placed in the docket and made available on the Internet. If you submit an electronic comment, EPA recommends that you include your name and other contact information in the body of your comment and with any disk or CD-ROM you submit. If EPA cannot read your comment due to technical difficulties and cannot contact you for clarification, EPA may not be able to consider your comment. Electronic files should avoid the use of special characters, any form of encryption, and be free of any defects or viruses.

Docket: All documents in the docket are listed in the docket index. Although listed in the index, some information is not publicly available, e.g., CBI or other information whose disclosure is restricted by statute. Certain other material, such as copyrighted material, is not placed on the Internet and will be publicly available only in hard copy form. Publicly available docket materials are available either in the electronic docket at *http://www.regulations.gov*, or, if only available in hard copy, at the OPP Regulatory Public Docket in Rm. S-4400, One Potomac Yard (South Building), 2777 S. Crystal Drive, Arlington, VA. The hours of operation of this Docket Facility are from 8:30 a.m. to 4 p.m., Monday through Friday, excluding legal holidays. The Docket telephone number is (703) 305-5805.

FOR FURTHER INFORMATION CONTACT: Jacqueline Guerry, Special Review and Reregistration Division (7508P), Office of Pesticide Programs, Environmental Protection Agency, 1200 Pennsylvania Ave., NW., Washington, DC 20460-0001; telephone number: (703) 305-0024; fax number: (703) 308-8005; e-mail address: *guerry.jacqueline@epa.gov*.

SUPPLEMENTARY INFORMATION:

I. General Information

A. Does this Action Apply to Me?

This action is directed to the public in general, and may be of interest to a wide range of stakeholders including environmental, human health, and agricultural advocates; the chemical industry; pesticide users; and members of the public interested in the sale, distribution, or use of pesticides. Since others also may be interested, the Agency has not attempted to describe all the specific entities that may be affected by this action. If you have any questions regarding the applicability of this action to a particular entity, consult the person listed under **FOR FURTHER INFORMATION CONTACT.**

B. What Should I Consider as I Prepare My Comments for EPA?

1. *Submitting CBI*. Do not submit this information to EPA through regulations.gov or e-mail. Clearly mark the part or all of the information that you claim to be CBI. For CBI information in a disk or CD ROM that you mail to EPA, mark the outside of the disk or CD ROM as CBI and then identify electronically within the disk or CD ROM the specific information that is claimed as CBI. In addition to one complete version of the comment that includes information claimed as CBI, a copy of the comment that does not contain the information claimed as CBI must be submitted for inclusion in the public docket. Information so marked will not be disclosed except in accordance with procedures set forth in 40 CFR part 2.

2. *Tips for preparing your comments*. When submitting comments, remember to:

i. Identify the document by docket ID number and other identifying information (subject heading, **Federal Register** date and page number).

ii. Follow directions. The Agency may ask you to respond to specific questions or organize comments by referencing a Code of Federal Regulations (CFR) part or section number.

iii. Explain why you agree or disagree; suggest alternatives and substitute language for your requested changes.

iv. Describe any assumptions and provide any technical information and/or data that you used.

v. If you estimate potential costs or burdens, explain how you arrived at your estimate in sufficient detail to allow for it to be reproduced.

vi. Provide specific examples to illustrate your concerns and suggest alternatives.

vii. Explain your views as clearly as possible, avoiding the use of profanity or personal threats.

viii. Make sure to submit your comments by the comment period deadline identified.

II. Background

A. What Action is the Agency Taking?

Under section 4 of the Federal Insecticide, Fungicide, and Rodenticide Act (FIFRA), EPA is reevaluating existing pesticides to ensure that they meet current scientific and regulatory standards. EPA has completed a Reregistration Eligibility Decision (RED) for the pesticide, permethrin under section 4(g)(2)(A) of FIFRA. Permethrin is part of the pyrethroid class of pesticides and was first registered in 1979. It is a broad spectrum, non-systemic, synthetic pyrethroid insecticide, and is registered for use on numerous food/feed crops, livestock and livestock housing, modes of transportation, structures, buildings, Public Health Mosquito abatement programs, numerous indoor and outdoor residential spaces, pets, and clothing. EPA has determined that the data base to support reregistration is substantially complete and that products containing permethrin are eligible for reregistration, provided the risks are mitigated either in the manner described in the RED or by another means that achieves equivalent risk reduction. Upon submission of any required product specific data under section 4(g)(2)(B) and any necessary changes to the registration and labeling (either to address concerns identified in the RED or as a result of product specific data), EPA will make a final reregistration decision under section 4(g)(2)(C) for products containing permethrin.

EPA must review tolerances and tolerance exemptions that were in effect when the Food Quality Protection Act (FQPA) was enacted in August 1996, to ensure that these existing pesticide residue limits for food and feed commodities meet the safety standard established by the new law. Tolerances are considered reassessed once the safety finding has been made or a revocation occurs. EPA has reviewed and made the requisite safety finding for the permethrin tolerances included in this notice.

Although the permethrin RED was signed on April 6, 2006, certain components of the document, which did not affect the final regulatory decision, were undergoing final editing at that time. These components, including the list of additional generic data requirements, summary of labeling changes, appendices, and other relevant information, have been added to the permethrin RED document. None of these additions alter the conclusions documented in the April 6, 2006, permethrin RED.

EPA is applying the principles of public participation to all pesticides undergoing reregistration and tolerance reassessment. The Agency's Pesticide Tolerance Reassessment and Reregistration; Public Participation Process, published in the **Federal Register** on May 14, 2004, (69 FR 26819)(FRL–7357–9) explains that in conducting these programs, EPA is tailoring its public participation process to be commensurate with the level of risk, extent of use, complexity of issues, and degree of public concern associated with each pesticide. Due to its uses, risks, and other factors, permethrin was reviewed through the modified 4-Phase process. Through this process, EPA worked extensively with stakeholders and the public to reach the regulatory decisions for permethrin.

The reregistration program is being conducted under Congressionally mandated time frames, and EPA recognizes the need both to make timely decisions and to involve the public. The Agency is issuing the permethrin RED for public comment. This comment period is intended to provide an additional opportunity for public input and a mechanism for initiating any necessary amendments to the RED. All comments should be submitted using the methods in **ADDRESSES**, and must be received by EPA on or before the closing date. These comments will become part of the Agency Docket for permethrin. Comments received after the close of the comment period will be marked ''late.'' EPA is not required to consider these late comments.

The Agency will carefully consider all comments received by the closing date and will provide a Response to Comments Memorandum in the Docket and regulations.gov. If any comment significantly affects the document, EPA also will publish an amendment to the RED in the **Federal Register**. In the absence of substantive comments requiring changes, the permethrin RED will be implemented as it is now presented.

B. What is the Agency's Authority for Taking this Action?

Section 4(g)(2) of FIFRA as amended directs that, after submission of all data concerning a pesticide active ingredient, the Administrator shall determine whether pesticides containing such active ingredient are eligible for reregistration, before calling in product specific data on individual end-use products and either reregistering products or taking other ''appropriate regulatory action.''

Section 408(q) of the Federal Food, Drug, and Cosmetic Act (FFDCA), 21 U.S.C. 346a(q), requires EPA to review tolerances and exemptions for pesticide residues in effect as of August 2, 1996, to determine whether the tolerance or exemption meets the requirements of section 408(b)(2) or (c)(2) of FFDCA. This review is to be completed by August 3, 2006.

List of Subjects

Environmental protection, Pesticides and pests.

Dated: June 15, 2006.

Debra Edwards,

Director, Special Review and Reregistration Division, Office of Pesticide Programs.

[FR Doc. 06–5853 Filed 6–27–06; 8:45 am]

BILLING CODE 6560–50–S

ENVIRONMENTAL PROTECTION AGENCY

[EPA–HQ–OPP–2006–0490; FRL–8072–5]

Phytophthora Palmivora (MWV) and Methyl Salicylate; Reregistration Eligibility Decision; Notice of Availability

AGENCY: Environmental Protection Agency (EPA).

ACTION: Notice.

SUMMARY: This notice announces the availability of EPA's Reregistration Eligibility Decision (RED) for the pesticide *Phytophthora palmivora* (MWV) and methyl salicylate, and opens a public comment period on this document. The Agency's risk assessments and other related documents also are available in the *Phytophthora palmivora* MWV and methyl salicylate Docket. *Phytophthora palmivora* MWV is expected to control milk weed vine in citrus groves in certain counties of Florida. Methyl salicylate is a biochemical insect and animal repellent. EPA has reviewed *Phytophthora palmivora* MWV and methyl salicylate through the public participation process that the Agency uses to involve the public in developing pesticide reregistration and tolerance reassessment decisions. Through these programs, EPA is ensuring that all pesticides meet current health and safety standards.

DATES: Comments must be received on or before July 28, 2006.

ADDRESSES: Submit your comments, identified by docket identification (ID) number EPA–HQ–OPP–2006–0490, by one of the following methods:

• Federal eRulemaking Portal: *http://www.regulations.gov*. Follow the on-line instructions for submitting comments.

• *Mail*: Office of Pesticide Programs (OPP) Regulatory Public Docket (7502P), Environmental Protection Agency, 1200 Pennsylvania Ave., NW., Washington, DC 20460-0001.

• *Delivery*: OPP Regulatory Public Docket (7502P), Environmental Protection Agency, Rm. S-4400, One Potomac Yard (South Building), 2777 S. Crystal Drive, Arlington, VA. Deliveries are only accepted during the Docket's normal hours of operation (8:30 a.m. to 4 p.m., Monday through Friday, excluding legal holidays). Special arrangements should be made for deliveries of boxed information. The Docket telephone number is (703) 305-5805.

Instructions: Direct your comments to docket ID number EPA–HQ–OPP–2006–0490. EPA's policy is that all comments received will be included in the docket without change and may be made available on-line at *http://www.regulations.gov*, including any personal information provided, unless the comment includes information claimed to be Confidential Business Information (CBI) or other information whose disclosure is restricted by statute. Do not submit information that you consider to be CBI or otherwise protected through regulations.gov or e-mail. The Federal regulations.gov website is an ''anonymous access'' system, which means EPA will not know your identity or contact information unless you provide it in the body of your comment. If you send an e-mail comment directly to EPA without going through regulations.gov, your e-mail address will be automatically captured and included as part of the comment that is placed in the docket and made available on the Internet. If you submit an electronic comment, EPA recommends that you include your name and other contact information in the body of your comment and with any disk or CD-ROM you submit. If EPA cannot read your comment due to technical difficulties and cannot contact you for clarification, EPA may not be able to consider your comment. Electronic files should avoid the use of special characters, any form of encryption, and be free of any defects or viruses.

Docket: All documents in the docket are listed in the docket index. Although listed in the index, some information is not publicly available, e.g., CBI or other information whose disclosure is restricted by statute. Certain other material, such as copyrighted material, is not placed on the Internet and will be publicly available only in hard copy form. Publicly available docket materials are available either in the electronic docket at *http://www.regulations.gov*, or, if only available in hard copy, at the OPP Regulatory Public Docket in Rm. S-4400, One Potomac Yard (South Building), 2777 S. Crystal Drive, Arlington, VA. The hours of operation of this Docket Facility are from 8:30 a.m. to 4 p.m., Monday through Friday, excluding legal holidays. The Docket Facility telephone number is (703) 305-5805.

FOR FURTHER INFORMATION CONTACT: Shanaz Bacchus for *Phytophthora palmivora* (telephone number: (703) 308-8097) and Richard King (telephone number: (703) 308-8052) for Methyl salicylate, Biopesticides and Pollution Prevention Division (7511P), Environmental Protection Agency, 1200 Pennsylvania Ave., NW., Washington, DC 20460-0001; fax number: (703) 308-7026; e-mail addresses: *bacchus.shanaz@epa.gov*, and *king.richard@epa.gov*.

SUPPLEMENTARY INFORMATION:

I. General Information

A. Does this Action Apply to Me?

This action is directed to the public in general, and may be of interest to a wide range of stakeholders including environmental, human health, and agricultural advocates; the chemical industry; pesticide users; and members of the public interested in the sale, distribution, or use of pesticides. Since others also may be interested, the Agency has not attempted to describe all the specific entities that may be affected by this action. If you have any questions regarding the applicability of this action to a particular entity, consult the person listed under **FOR FURTHER INFORMATION CONTACT.**

B. What Should I Consider as I Prepare My Comments for EPA?

1. *Submitting CBI.* Do not submit this information to EPA through regulations.gov or e-mail. Clearly mark the part or all of the information that you claim to be CBI. For CBI information in a disk or CD ROM that you mail to EPA, mark the outside of the disk or CD ROM as CBI and then identify electronically within the disk or CD ROM the specific information that is claimed as CBI. In addition to one complete version of the comment that includes information claimed as CBI, a copy of the comment that does not contain the information claimed as CBI must be submitted for inclusion in the public docket. Information so marked will not be disclosed except in accordance with procedures set forth in 40 CFR part 2.

2. *Tips for preparing your comments.* When submitting comments, remember to:

i. Identify the document by docket ID number and other identifying information (subject heading, **Federal Register** date and page number).

ii. Follow directions. The Agency may ask you to respond to specific questions or organize comments by referencing a Code of Federal Regulations (CFR) part or section number.

iii. Explain why you agree or disagree; suggest alternatives and substitute language for your requested changes.

iv. Describe any assumptions and provide any technical information and/or data that you used.

v. If you estimate potential costs or burdens, explain how you arrived at your estimate in sufficient detail to allow for it to be reproduced.

vi. Provide specific examples to illustrate your concerns and suggest alternatives.

vii. Explain your views as clearly as possible, avoiding the use of profanity or personal threats.

viii. Make sure to submit your comments by the comment period deadline identified.

II. Background

A. What Action is the Agency Taking?

Under section 4 of the Federal Insecticide, Fungicide, and Rodenticide Act (FIFRA), EPA is reevaluating existing pesticides to ensure that they meet current scientific and regulatory standards. EPA has completed a Reregistration Eligibility Decision (RED) for the pesticides, *Phytophthora palmivora* MWV and methyl salicylate under section 4(g)(2)(A) of FIFRA.

Below is a summary of each case:

1. *Phytophthora palmivora*. MWV-Case 4105 (PC Code 111301). *Phytophthora palmivora* MWV is a fungus that controls milk weed vine in citrus groves by attacking their roots. It is a plant pathogen that is very specific for this target plant pest and occurs naturally in Florida in the counties for which it is labeled. The active ingredient, *P. palmivora*, was registered in 1981 by Abbott Laboratories but was transferred on April 29, 2000, to Valent BioSciences Corporation who still holds the registration. Valent's label for Devine Biological Herbicide indicates that the product is for use on citrus groves in Florida only and ''do not use

in Clay, Gulf, Liberty, or Gadsden counties.'' It is to be applied approximately once every two years. It is considered in Toxicity Category IV based on acute toxicology tests in mammalian systems as described in the RED. No hypersensitivity incidents have been reported in association with the use of this pesticide. This fungal active ingredient is not expected to harm human adults, infants and children via dietary, non-dietary, aggregate, occupational, residential and cumulative exposures. The exemption from tolerance was reassessed and the database complies with the Food Quality Protection Act of 1996. The pesticide is not to be used in counties where susceptible endangered species are found. No harm is expected to human health and the environment including birds, beneficial insects, aquatic and other non-target terrestrial organisms, and wildlife. There is a ''not likely to adversely affect'' (NLAA) endangered species determination when the labeling excludes applications in counties where endangered plants may be found.

2. *Methyl salicylate*. Case 4080 (PC Code 076601). Methyl salicylate is a biochemical insect and animal repellant. Methyl salicylate was first registered in 1972 for use as an animal repellent in impregnated twist tabs hung on plants to repel dogs and cats from flower gardens. In 1996, the Agency registered methyl salicylate as an insect repellent to be used as a constituent of food and feed packaging material to repel insects in stored commodities (e.g. Indian meal moths). This registration is considered to be a ''food use'', since it entails use in stored food commodities which necessitated the establishment of an exemption from the requirements of a tolerance (Refer to 40 CFR 180.1189). The active ingredient methyl salicylate is considered to be a low toxicity biochemical (toxicity categories III and IV) as described in the RED on the basis of toxicological mammalian tests for acute oral, dermal effects and primary eye and skin irritations. No reported incidents of hypersensitivity have been reported to the Agency. In fact, methyl salicylate has a long history of use in consumer products as a counterirritant and as an analgesic in the treatment and temporary management of aching and painful muscles and joints. Methyl salicylate is also used in suntan lotions as an UV-absorber, and in perfumery as a modifier of blossom fragrances. Because of its use patterns, as twist tabs in flower gardens and a constituent of food packaging, methyl salicylate is not expected to harm aquatic or terrestrial non-target birds, fish, beneficial insects or plants or the environment. The data base supporting the RED complies with the Food Quality Protection Act of 1996. No harm is expected to human adults, infants, and children from dietary, non-dietary, aggregate, residential and occupational and cumulative exposure when this biochemical pesticide is used as labeled.

EPA has determined that the data base to support reregistration is substantially complete and that products containing *Phytophthora palmivora* MWV and methyl salicylate are eligible for reregistration depending on their specific uses, provided the risks are mitigated either in the manner described in the RED or by another means that achieves equivalent risk reduction. Upon submission of any required product specific data under section 4(g)(2)(B) and any necessary changes to the registration and labeling (either to address concerns identified in the RED or as a result of product specific data), EPA will make a final reregistration decision under section 4(g)(2)(C) for products containing *Phytophthora palmivora* MWV and methyl salicylate.

EPA must review tolerances and tolerance exemptions that were in effect when the Food Quality Protection Act (FQPA) was enacted in August 1996, to ensure that these existing pesticide residue limits for food and feed commodities meet the safety standard established by the new law. Tolerances are considered reassessed once the safety finding has been made or a revocation occurs. EPA has reviewed and made the requisite safety finding for the *Phytophthora palmivora* MWV and methyl salicylate exemptions from tolerances included in this notice.

Although the *Phytophthora palmivora* MWV and Methyl salicylate REDs were signed on March 1, 2006, and September 22, 2005, respectively, certain components of the document, which did not affect the final regulatory decision, were undergoing final editing at that time. These components, including the list of additional generic data requirements, summary of labeling changes, appendices, and other relevant information, have been added to the *Phytophthora palmivora* MWV and methyl salicylate RED document. In addition, subsequent to signature, EPA identified several minor errors and ambiguities in the document. Therefore, for the sake of accuracy, the Agency also has included the appropriate error corrections, amendments, and clarifications. None of these additions or changes alter the conclusions documented in the March 1, 2006, *Phytophthora palmivora* MWV and September 22, 2005, methyl salicylate RED. All of these changes are described in detail in an errata memorandum which is included in the public docket for *Phytophthora palmivora* MWV and methyl salicylate

EPA is applying the principles of public participation to all pesticides undergoing reregistration and tolerance reassessment. The Agency's Pesticide Tolerance Reassessment and Reregistration; Public Participation Process, published in the **Federal Register** on May 14, 2004, (69 FR 26819) (FRL–7357–9) explains that in conducting these programs, EPA is tailoring its public participation process to be commensurate with the level of risk, extent of use, complexity of issues, and degree of public concern associated with each pesticide. Due to its uses, risks, and other factors, *Phytophthora palmivora* MWV and methyl salicylate was reviewed through the full 6-Phase or modified 4-Phase process. Through this process, EPA worked extensively with stakeholders and the public to reach the regulatory decisions for *Phytophthora palmivora* MWV and methyl salicylate.

The reregistration program is being conducted under Congressionally mandated time frames, and EPA recognizes the need both to make timely decisions and to involve the public. The Agency is issuing the *Phytophthora palmivora* MWV and methyl salicylate RED for public comment. This comment period is intended to provide an additional opportunity for public input and a mechanism for initiating any necessary amendments to the RED. All comments should be submitted using the methods in **ADDRESSES**, and must be received by EPA on or before the closing date. These comments will become part of the Agency Docket for *Phytophthora palmivora* MWV and methyl salicylate. Comments received after the close of the comment period will be marked ''late.'' EPA is not required to consider these late comments.

The Agency will carefully consider all comments received by the closing date and will provide a Response to Comments Memorandum in the Docket and regulations.gov. If any comment significantly affects the document, EPA also will publish an amendment to the RED in the **Federal Register**. In the absence of substantive comments requiring changes, the *Phytophthora palmivora* MWV and methyl salicylate RED will be implemented as it is now presented.

B. What is the Agency's Authority for Taking this Action?

Section 4(g)(2) of FIFRA as amended directs that, after submission of all data concerning a pesticide active ingredient, the Administrator shall determine whether pesticides containing such active ingredient are eligible for reregistration, before calling in product specific data on individual end-use products and either reregistering products or taking other ''appropriate regulatory action.''

Section 408(q) of the Federal Food, Drug, and Cosmetic Act (FFDCA), 21 U.S.C. 346a(q), requires EPA to review tolerances and exemptions for pesticide residues in effect as of August 2, 1996, to determine whether the tolerance or exemption meets the requirements of section 408(b)(2) or (c)(2) of FFDCA. This Agency review is to be completed by August 3, 2006. EPA has reviewed and made the requisite safety finding for the exemptions from tolerances for the following pesticides: *Phytophthora palmivora* MWV and the biochemical pesticide methyl salicylate included in this notice. The exemptions from tolerances for these two biopesticides comply with the requirements of FQPA.

List of Subjects

Environmental protection, Pesticides and pests.

Dated: June 16, 2006.

Janet L. Andersen,

Director, Biopesticides and Pollution Prevention Division, Office of Pesticide Programs.

[FR Doc. 06–5855 Filed 6–27–06; 8:45 am]

BILLING CODE 6560–50–S

ENVIRONMENTAL PROTECTION AGENCY

[EPA–HQ–OPP–2006–0368; FRL–8073–3]

Notice of Filing of a Pesticide Petition for Establishment of an Exemption from the Requirement of Tolerances for Residues of Acetic Acid Ethenyl Ester, Polymer with 1-Ethenyl-2-Pyrrolidinone in or on Various Food Commodities; Correction

AGENCY: Environmental Protection Agency (EPA).

ACTION: Notice; technical correction.

SUMMARY: EPA issued a notice in the **Federal Register** of May 31, 2006, concerning the initial filing of a pesticide petition proposing the establishment of an exemption from the requirement of tolerances for residues of poly (2-ethylhexyl acrylate/2-hydroxyethyl acrylate/N-(hydroxymethyl)-2-methylacrylamide/methacrylic acid/methyl methacrylate/styrene, ammonium salt in or on various food commodities. This document is being issued to correct the chemical name and the petitioner's name.

FOR FURTHER INFORMATION CONTACT: Bipin Gandhi, Registration Division (7505P), Office of Pesticide Programs, Environmental Protection Agency, 1200 Pennsylvania Ave., NW., Washington, DC 20460-0001; telephone number: (703) 308-8380; e-mail address: *gandhi.bipin@epa.gov*.

SUPPLEMENTARY INFORMATION:

I. General Information

A. Does this Action Apply to Me?

The Agency included in the notice a list of those who may be potentially affected by this action. If you have questions regarding the applicability of this action to a particular entity, consult the person listed under **FOR FURTHER INFORMATION CONTACT**.

B. How Can I Get Copies of this Document and Other Related Information?

1. *Docket.* EPA has established a docket for this action under docket identification (ID) number EPA–HQ–OPPT–2006–0368. Publicly available docket materials are available either in the electronic docket at *http://www.regulations.gov*, or, if only available in hard copy, at the Office of Pesticide Programs (OPP) Regulatory Public Docket in Rm. S-4400, One Potomac Yard (South Building), 2777 S. Crystal Drive, Arlington, VA. The hours of operation of the Docket Facility are from 8:30 a.m. to 4 p.m., Monday through Friday, excluding legal holidays. The Docket telephone number is (703) 305-5805.

2. *Electronic access.* You may access this **Federal Register** document electronically through the EPA Internet under the ''**Federal Register**'' listings at *http://www.epa.gov/fedrgstr/*.

II. What Does this Correction Do?

FR Doc. E6–8145 published in the **Federal Register** of May 31, 2006 (71 FR 30919) (FRL–8068–9) is corrected as follows:

1. On page 30919, in the third column, the heading should read as set forth at the beginning of this document.

2. On the same page, same column, under **SUMMARY**, in the fifth line, the chemical name ''poly (2–ethylhexyl acrylate/2–hydroxyethyl acrylate/N–(hydroxymethyl)–2–methylacrylamide/methacrylic acid/methyl methacrylate/styrene, ammonium salt'' should read ''acetic acid ethenyl ester, polymer with 1–ethenyl–2–pyrrolidinone (or acetic acid vinyl ester, polymer with 1–vinyl –2–pyrrolidinone) (CAS Reg. No. 25086–89–9)''.

3. On page 30921, in the first column, under **New Exemption for Tolerance**, beginning in the first line, ''E. I. DuPont de Nemours & Company, Inc. , 1007 Market St., Wilmington, DE 19898'' should read ''BASF Corporation, 100 Campus Drive, Florham Park, NJ 07932''.; and beginning in the sixth line, the chemical name ''poly (2–ethylhexyl acrylate/2–hydroxyethyl acrylate/N–(hydroxymethyl)–2–methylacrylamide/methacrylic acid/methyl methacrylate/styrene, ammonium salt'' should read ''acetic acid ethenyl ester, polymer with 1–ethenyl–2–pyrrolidinone (or acetic acid vinyl ester, polymer with 1–vinyl –2–pyrrolidinone) (CAS Reg. No. 25086–89–9)''.

List of Subjects

Environmental protection, Agricultural commodities, Feed additives, Food Additives, Pesticides and pests, Reporting and recording keeping requirements.

Dated: June 16, 2006.

Lois Rossi,

Director, Registration Division, Office of Pesticide Programs.

[FR Doc. 06–5859 Filed 6–27–06; 8:45 am]

BILLING CODE 6560–50–S

EXPORT-IMPORT BANK OF THE UNITED STATES

Economic Impact Policy

This notice is to inform the public that the Export-Import Bank of the United States has received an application to finance the export of an electron beam furnace to Japan valued at approximately $16 million. The furnace will be fully installed in 2007 and will be used to generate an additional 7,000 metric tons per year of commercial grade titanium ingot. Available information indicates that this new production will be consumed in Japan. Interested parties may submit comments on this transaction by e-mail to *economic.impact@exim.gov* or by mail to 811 Vermont Avenue, NW., Room 1238, Washington, DC 20571, within 14 days of the date this notice appears in the **Federal Register**.

Helene S. Walsh,

Director, Policy Oversight and Review.

[FR Doc. 06–5835 Filed 6–27–06; 8:45 am]

BILLING CODE 6690–01–P

FEDERAL COMMUNICATIONS COMMISSION

Public Information Collection(s) Requirement Submitted to OMB for Emergency Review and Approval

June 19, 2006.

SUMMARY: The Federal Communications Commission, as part of its continuing effort to reduce paperwork burden invites the general public and other Federal agencies to take this opportunity to comment on the following information collection(s), as required by the Paperwork Reduction Act of 1995, Public Law 104–13. An agency may not conduct or sponsor a collection of information unless it displays a currently valid control number. No person shall be subject to any penalty for failing to comply with a collection of information subject to the Paperwork Reduction Act (PRA) that does not display a valid control number. Comments are requested concerning (a) whether the proposed collection of information is necessary for the proper performance of the functions of the Commission, including whether the information shall have practical utility; (b) the accuracy of the Commission's burden estimate; (c) ways to enhance the quality, utility, and clarity of the information collected; and (d) ways to minimize the burden of the collection of information on the respondents, including the use of automated collection techniques or other forms of information technology.

DATES: Written Paperwork Reduction Act (PRA) comments should be submitted on or before July 28, 2006. If you anticipate that you will be submitting comments, but find it difficult to do so within the period of time allowed by this notice, you should advise the contacts listed below as soon as possible.

ADDRESSES: Direct all PRA comments to Kristy L. LaLonde, Office of Management and Budget, Room 10234 NEOB, Washington, DC 20503, (202) 395–3087, or via fax at 202–395–5167 or via Internet at *Kristy_L._LaLonde@omb.eop.gov* and to Judith B. Herman, Federal Communications Commission, Room 1–C804, 445 12th Street, SW., Washington, DC 20554 or an e-mail to *PRA@fcc.gov.* If you would like to obtain or view a copy of this information collection, you may do so by visiting the FCC PRA Web page at: *http://www.fcc.gov/omd/pra.*

FOR FURTHER INFORMATION CONTACT: For additional information or copies of the information collection(s), contact Judith B. Herman at 202–418–0214 or via the Internet at *Judith-B.Herman@fcc.gov.*

SUPPLEMENTARY INFORMATION:

The Commission is requesting emergency OMB processing of these information collections and has requested OMB approval by July 3, 2006.

OMB Control Number: 3060–XXXX.

Title: Interim Procedures for Filing Applications Seeking Approval for Designated Entity Reportable Eligibility Events and Annual Reports.

Form Nos.: FCC Forms 609–T and 611–T.

Type of Review: New collection.

Respondents: Business or other for-profit, not-for-profit institutions, state, local and tribal government.

Number of Respondents: 1,000 respondents; 2,500 responses.

Estimated Time Per Response: .50–6 hours.

Frequency of Response: On occasion and annual reporting requirements.

Total Annual Burden: 6,625 hours.

Total Annual Cost: $1,358,750.

Privacy Act Impact Assessment: N/A.

Needs and Uses: The Commission is seeking emergency processing of these information collections by July 3, 2006.

On April 25, 2006, the Commission adopted and released a Second Report and Order and Second Further Notice of Proposed Rulemaking in FCC 06–52, WT Docket No. 05–211 which modified the Commission's rules regarding the collection of information regarding eligibility for designated entity benefits pursuant to 47 CFR sections 1.2110(n) and 1.2114. The Second Report and Order specifically required licensees that have designated entity benefits to: (1) submit annual report to the Commission on new FCC Form 611–T; and (2) report certain agreements and arrangements entered into by the designated entity licensee, called ''reportable eligibility events'' that may affect a licensee's eligibility for designated entity benefits and are reported on new FCC Form 609–T.

On June 2, 2006, the Commission, on its own motion, released an Order on Reconsideration of the Second Report and Order in FCC 06–78, WT Docket No. 05–211 which reconsidered and re-clarified its newly-adopted rules, including those resulting in the information collections that are subject of this emergency request. A copy of the entire OMB submission may be found under the **ADDRESSES** section of this **Federal Register.** Please look for the title of this collection in our PRA website because it has not been assigned an OMB Control Number yet.

OMB Control Number: 3060–0799.

Title: FCC Ownership Disclosure Information for the Wireless Telecommunications Services.

Form No.: FCC Forms 602.

Type of Review: Revision of a currently approved collection.

Respondents: Business or other for-profit, not-for-profit institutions, state, local and tribal government.

Number of Respondents: 500 respondents; 5,065 responses.

Estimated Time Per Response: .50–3 hours.

Frequency of Response: On occasion reporting requirement and third party disclosure requirement.

Total Annual Burden: 5,065 hours.

Total Annual Cost: $478,200.

Privacy Act Impact Assessment: N/A.

Needs and Uses: The Commission is seeking emergency processing of these information collections by July 3, 2006.

On April 25, 2006, the Commission adopted and released a Second Report and Order and Second Further Notice of Proposed Rulemaking in FCC 06–52, WT Docket No. 05–211. This rulemaking will become effective thirty days after publication in the **Federal Register.** The Commission is now revising FCC Form 602 instructions to require that designated entities have updated and complete FCC Form 602's on file with the Commission whenever a designated entity files an application for approval of a reportable eligibility event. All designated entities are required to have an FCC Form 602 on file, so a designated entity applying for approval of a reportable eligibility event will have to check its Form 602 to ensure that it is complete and, if it is not complete, file an updated version. This emergency request is to implement interim procedures to allow the Commission to collect information regarding the ownership of a designated entity when an application is filed seeking approval of a reportable eligibility event will not change the questions on the Form or the substance of the information collected in any way. We note that, if the information on the designated entity's FCC Form 602 is complete and accurate when an application seeking approval for a reportable eligibility event is filed, the designated entity will not have to file a new or updated FCC Form 602. A copy of the entire OMB submission may be found under the **ADDRESSES** section of this **Federal Register.** Please look for the OMB control number (3060–0799) in our PRA Web site.

Federal Communications Commission.

Marlene H. Dortch,

Secretary.

[FR Doc. E6–10185 Filed 6–27–06; 8:45 am]

BILLING CODE 6712–01–P

FEDERAL COMMUNICATIONS COMMISSION

[CG Docket No. 03–123; DA 06–1244]

Notice of Certification of GoAmerica, Inc. as a Provider of Internet Protocol Relay (IP Relay) and Video Relay Service (VRS) Eligible for Compensation From the Interstate Telecommunications Relay Service (TRS) Fund

AGENCY: Federal Communications Commission.

ACTION: Notice.

SUMMARY: In this document, the Commission grants GoAmerica, Inc. (GoAmerica) certification as a provider of IP Relay and VRS services eligible for compensation from the Interstate TRS Fund. The Commission concludes that GoAmerica has demonstrated that its provision of IP Relay and VRS will meet or exceed all operational, technical, and functional TRS standards set forth in the Commission's rules; that it makes available adequate procedures and remedies for ensuring compliance with applicable Commission rules; and that to the extent GoAmerica's service differs from the mandatory minimum standards, the service does not violate the rules.

DATES: Effective June 9, 2006.

ADDRESSES: Federal Communications Commission, 445 12th Street, SW., Washington DC 20554.

FOR FURTHER INFORMATION CONTACT: Gregory Hlibok, Consumer & Governmental Affairs Bureau, Disability Rights Office at (866) 410–5787 ext. 16757 (Voice), (202) 418–0431 (TTY), or e-mail at *Gregory.Hlibok@fcc.gov.*

SUPPLEMENTARY INFORMATION: This is a summary of the Commission's document DA 06–1244, released June 9, 2006, addressing an application for certification filed by GoAmerica, Inc. on March 16, 2006. *See Notice of Certification of GoAmerica as a Provider of Internet Protocol (IP Relay) and Video Relay Service (VRS) Eligible for Compensation from the Interstate Telecommunications Relay Service (TRS) Fund*, in CG Docket No. 03–123. The full text of document DA 06–1244 and copies of any subsequently filed documents in this matter will be available for public inspection and copying during regular business hours at the FCC Reference Information Center, Portals II, 445 12th Street, SW., Room CY–A257, Washington, DC 20554. Document DA 06–1244 and copies of subsequently filed documents in this matter may also be purchased from the Commission's duplicating contractor at Portals II, 445 12th Street, SW., Room CY–B402, Washington, DC 20554. Customers may contact the Commission's duplicating contractor at its Web site *http://www.bcpiweb.com* or by calling 1–800–378–3160. To request materials in accessible formats for people with disabilities (Braille, large print, electronic files, audio format), send an e-mail to *fcc504@fcc.gov* or call the Consumer & Governmental Affairs Bureau at (202) 418–0530 (voice), (202) 418–0432 (TTY). Document DA 06–1244 can also be downloaded in Word or Portable Document Format (PDF) at: *http://www.fcc.gov/cgb/dro.*

Synopsis

On March 16, 2006, GoAmerica, Inc. (GoAmerica) filed an application for certification, (GoAmerica, Inc., *IP Relay and VRS Certification Application of GoAmerica, Inc.,* CG Docket No. 03–123 (March 16, 2006) (*GoAmerica Application*)) as a provider of IP Relay and VRS services eligible for compensation from the Interstate TRS Fund (Fund) pursuant to the recently adopted provider certification rules. *See Telecommunications Relay Services for Individuals with Hearing and Speech Disabilities,* Report and Order and Order on Reconsideration, CG Docket No. 03–123, FCC 05–203 (December 12, 2005); published at 70 FR 76208, December 23, 2005 (*2005 IP Relay and VRS Provider Order*); 47 CFR 64.605(a)(2) of the Commission's rules. Prior to the *2005 IP Relay and VRS Provider Order,* an entity desiring to offer TRS and receive compensation from the Fund had to meet one of the three eligibility standards set forth in 47 CFR 64.604(c)(5)(iii)(F) of the Commission's rules. On April 21, 2006, GoAmerica submitted a supplement, (GoAmerica, Inc., *IP Relay and VRS Certification Supplement to Application of GoAmerica, Inc.,* CG Docket No. 03–123 (April 21, 2006) (*GoAmerica Supplement*)) to its original application for certification. GoAmerica's application is granted, subject to the conditions noted below.

On December 12, 2005, the Commission released an order adopting new rules permitting carriers desiring to offer IP Relay and VRS services and receive payment from the Fund to seek certification as a provider eligible for compensation from the Fund. *2005 IP Relay and VRS Provider Order, supra.* The rules require entities seeking such certification to submit documentation to the Commission setting forth, in narrative form:

> (i) A description of the forms of TRS to be provided (*i.e.*, VRS and/or IP Relay); (ii) a description of how the provider will meet all non-waived mandatory minimum standards applicable to each form of TRS offered; (iii) a description of the provider's procedures for ensuring compliance with all applicable TRS rules; (iv) a description of the provider's complaint procedures; (v) a narrative describing any areas in which the provider's service will differ from the applicable mandatory minimum standards; (vi) a narrative establishing that services that differ from the mandatory minimum standards do not violate applicable mandatory minimum standards; (vii) demonstration of status as a common carrier; and (viii) a statement that the provider will file annual compliance reports demonstrating continued compliance with these rules. 47 CFR 64.605(a)(2) of the Commission's rules.

The rules further provide that after review of the submitted documentation, the Commission shall certify that the provider of IP Relay and VRS services is eligible for compensation from the Fund if the Commission determines that the certification documentation:

> (i) Establishes that the provision of IP Relay and VRS * * * will meet or exceed all non-waived operational, technical, and functional minimum standards contained in § 64.604 of the Commission's rules;
>
> (ii) establishes that the IP Relay and VRS * * * provider makes available adequate procedures and remedies for ensuring compliance with the requirements of this section and the mandatory minimum standards contained in § 64.604 of the Commission's rules, including that it makes available for TRS users informational materials on complaint procedures sufficient for users to know the proper procedures for filing complaints; and
>
> (iii) where the TRS service differs from the mandatory minimum standards contained in § 64.604 of the Commission's rules, the IP Relay and VRS * * * provider establishes that its service does not violate applicable mandatory minimum standards. 47 CFR 64.605(b)(2) of the Commission's rules.

The Bureau has reviewed the *GoAmerica Application* and *GoAmerica Supplement* pursuant to these rules. The Bureau concludes that GoAmerica has demonstrated that its provision of IP Relay and VRS services will meet or exceed all operational, technical, and functional TRS standards set forth in 47 CFR 64.604 of the Commission's rules; that it makes available adequate procedures and remedies for ensuring compliance with applicable Commission rules; and that to the extent GoAmerica's service differs from the mandatory minimum standards, the service does not violate the rules. *See,*

e.g., GoAmerica Supplement at 3 (noting that GoAmerica will offer speed dialing, phone book directory and relay calls customization for IP Relay).

The Bureau notes the Commission has adopted a declaratory ruling requiring the interoperability of VRS equipment and services. *See Telecommunications Relay Services for Individuals with Hearing and Speech Disabilities,* CG Docket No. 03–123, Declaratory Ruling and Further Notice of Proposed Rulemaking, FCC 06–57 (May 9, 2006), published at 71 FR 30818, May 31, 2006 and 71 FR 30848, May 31, 2006 (addressing California Coalition of Agencies Serving the Deaf and Hard of Hearing (CCASDHH), *Petition for Declaratory Ruling on Interoperability,* CC Docket No. 98–67, CG Docket No. 03–123, DA 05–509 (filed February 15, 2005)), published at 70 FR 12884, March 16, 2005. The Bureau conditions this grant of certification upon compliance with that order. *See also* 47 CFR 64.605(e)(2) of the Commission's rules (Commission may require certified providers to submit documentation demonstrating compliance with the mandatory minimum standards). Further, GoAmerica must file an annual report with the Commission evidencing that they are in compliance with § 64.604 of the Commission's rules. *See* 47 CFR 64.605(g) of the Commission's rules. The first such report shall be due one year after June 9, 2006, and subsequent reports shall be due each year thereafter.

This certification shall remain in effect for a period of five years from the release date of June 9, 2006. *See* 47 CFR 64.605(c)(2) of the Commission's rules. Within ninety days prior to the expiration of this certification, GoAmerica may apply for renewal of its IP Relay and VRS services certification by filing documentation in accordance with the Commission's rules. *See* 47 CFR 64.605(c)(2) of the Commission's rules.

Federal Communications Commission.

Monica S. Desai,

Chief, Consumer & Governmental Affairs Bureau.

[FR Doc. E6–9948 Filed 6–27–06; 8:45 am]

BILLING CODE 6712–01–P

FEDERAL COMMUNICATIONS COMMISSION

[CG Docket No. 03–123; DA 06–1243]

Notice of Certification of Healinc Telecom, LLC as a Provider of Video Relay Service (VRS) Eligible for Compensation From the Interstate Telecommunications Relay Service (TRS) Fund

AGENCY: Federal Communications Commission.

ACTION: Notice.

SUMMARY: In this document, the Commission grants Healinc Telecom, LLC (Healinc) certification as a VRS provider eligible for compensation from the Interstate TRS Fund. The Commission concludes that Healinc has demonstrated that its provision of VRS will meet or exceed all operational, technical, and functional TRS standards set forth in the Commission's rules; that it makes available adequate procedures and remedies for ensuring compliance with applicable Commission rules; and that to the extent Healinc's service differs from the mandatory minimum standards, the service does not violate the rules.

DATES: Effective June 9, 2006.

ADDRESSES: Federal Communications Commission, 445 12th Street, SW., Washington DC 20554.

FOR FURTHER INFORMATION CONTACT: Gregory Hlibok, Consumer & Governmental Affairs Bureau, Disability Rights Office at (866) 410–5787, ext. 16757 (Voice), (202) 418–0431 (TTY), or e-mail at *Gregory.Hlibok@fcc.gov*.

SUPPLEMENTARY INFORMATION: This is a summary of the Commission's document DA 06–1243, released June 9, 2006, addressing an application for certification filed by Healinc Telecom, LLC on February 22, 2006. *See Notice of Certification of Healinc Telecom, LLC as a Provider of Video Relay Service (VRS) Eligible for Compensation from the Interstate Telecommunications Relay Service (TRS) Fund*, in CG Docket No. 03–123. The full text of document DA 06–1243 and copies of any subsequently filed documents in this matter will be available for public inspection and copying during regular business hours at the FCC Reference Information Center, Portals II, 445 12th Street, SW., Room CY–A257, Washington, DC 20554. Document DA 06–1243 and copies of subsequently filed documents in this matter may also be purchased from the Commission's duplicating contractor at Portals II, 445 12th Street, SW., Room CY–B402, Washington, DC 20554. Customers may contact the Commission's duplicating contractor at its Web site *http://www.bcpiweb.com* or by calling 1–800–378–3160. To request materials in accessible formats for people with disabilities (Braille, large print, electronic files, audio format), send an e-mail to *fcc504@fcc.gov* or call the Consumer & Governmental Affairs Bureau at (202) 418–0530 (voice), (202) 418–0432 (TTY). Document DA 06–1243 can also be downloaded in Word or Portable Document Format (PDF) at: *http://www.fcc.gov/cgb/dro*.

Synopsis

On February 22, 2006, Healinc Telecom, LLC (Healinc) filed an application for certification, (Healinc Telecom, LLC, *VRS Certification Application of Healinc Telecom LLC* CG Docket No. 03–123 (February 22, 2006) (*Healinc Application*)) as a VRS provider eligible for compensation from the Interstate TRS Fund (Fund) pursuant to the recently adopted provider certification rules. *See Telecommunications Relay Services for Individuals with Hearing and Speech Disabilities*, Report and Order and Order on Reconsideration, CG Docket No. 03–123, FCC 05–203 (December 12, 2005); published at 70 FR 76208, December 23, 2005 (*2005 VRS Provider Order*); 47 CFR 64.605(a)(2) of the Commission's rules. Prior to the *2005 VRS Provider Order*, an entity desiring to offer TRS and receive compensation from the Fund had to meet one of the three eligibility standards set forth in 47 CFR 64.604(c)(5)(iii)(F) of the Commission's rules. On April 18, 2006, Healinc submitted an addendum, (Healinc Telecom, LLC, *VRS Certification Addendum of Healinc Telecom, LLC*, CG Docket No. 03–123 (April 18, 2006) (*Healinc Addendum*)) to its original application clarifying that it was seeking certification only as a provider of VRS. The addendum also documented Healinc's compliance with some mandatory minimum standards that were not addressed in its original application. Healinc's application is granted, subject to the conditions noted below.

On December 12, 2005, the Commission released an order adopting new rules permitting carriers desiring to offer VRS and receive payment from the Fund to seek certification as a provider eligible for compensation from the Fund. *2005 VRS Provider Order, supra*. The rules require entities seeking such certification to submit documentation to the Commission setting forth, in narrative form:

(i) A description of the forms of TRS to be provided (*i.e.*, VRS and/or IP Relay); (ii) a description of how the

provider will meet all non-waived mandatory minimum standards applicable to each form of TRS offered; (iii) a description of the provider's procedures for ensuring compliance with all applicable TRS rules; (iv) a description of the provider's complaint procedures; (v) a narrative describing any areas in which the provider's service will differ from the applicable mandatory minimum standards; (vi) a narrative establishing that services that differ from the mandatory minimum standards do not violate applicable mandatory minimum standards; (vii) demonstration of status as a common carrier; and (viii) a statement that the provider will file annual compliance reports demonstrating continued compliance with these rules. 47 CFR 64.605(a)(2) of the Commission's rules.

The rules further provide that after review of the submitted documentation, the Commission shall certify that the VRS provider is eligible for compensation from the Fund if the Commission determines that the certification documentation:

(i) Establishes that the provision of VRS * * * will meet or exceed all non-waived operational, technical, and functional minimum standards contained in § 64.604 of the Commission's rules; (ii) establishes that the VRS * * * provider makes available adequate procedures and remedies for ensuring compliance with the requirements of this section and the mandatory minimum standards contained in § 64.604 of the Commission's rules, including that it makes available for TRS users informational materials on complaint procedures sufficient for users to know the proper procedures for filing complaints; and (iii) where the TRS service differs from the mandatory minimum standards contained in § 64.604 of the Commission's rules, the VRS * * * provider establishes that its service does not violate applicable mandatory minimum standards. 47 CFR 64.605(b)(2) of the Commission's rules.

The Bureau has reviewed the *Healinc Application* and *Healinc Addendum* pursuant to these rules. The Bureau concludes that Healinc has demonstrated that its provision of VRS service will meet or exceed all operational, technical, and functional TRS standards set forth in 47 CFR 64.604 of the Commission's rules; that it makes available adequate procedures and remedies for ensuring compliance with applicable Commission rules; and that to the extent Healinc's service differs from the mandatory minimum standards, the service does not violate the rules. *See, e.g., Healinc Application* at page 9–13 of Appendix 2 (noting that Healinc will offer picture caller ID, picture directory of VRS CAs, and text messaging service).

The Bureau notes the Commission has adopted a declaratory ruling requiring the interoperability of VRS equipment and services. *See Telecommunications Relay Services for Individuals with Hearing and Speech Disabilities*, CG Docket No. 03–123, Declaratory Ruling and Further Notice of Proposed Rulemaking, FCC 06–57 (May 9, 2006), published at 71 FR 30818, May 31, 2006 and 71 FR 30848, May 31, 2006 (addressing California Coalition of Agencies Serving the Deaf and Hard of Hearing (CCASDHH), *Petition for Declaratory Ruling on Interoperability*, CC Docket No. 98–67, CG Docket No. 03–123, DA 05–509 (filed February 15, 2005)), published at 70 FR 12884, March 16, 2005. The Bureau conditions this grant of certification upon compliance with that order. *See also* 47 CFR 64.605(e)(2) of the Commission's rules (Commission may require certified providers to submit documentation demonstrating compliance with the mandatory minimum standards). Further, Healinc must file an annual report with the Commission evidencing that they are in compliance with § 64.604 of the Commission's rules. *See* 47 CFR 64.605(g) of the Commission's rules. The first such report shall be due one year after June 9, 2006, and subsequent reports shall be due each year thereafter.

This certification shall remain in effect for a period of five years from the release date of June 9, 2006. *See* 47 CFR 64.605(c)(2) of the Commission's rules. Within ninety days prior to the expiration of this certification, Healinc may apply for renewal of its VRS service certification by filing documentation in accordance with the Commission's rules. *See* 47 CFR 64.605(c)(2) of the Commission's rules.

Federal Communications Commission.

Jay Keithley,

Deputy Chief, Consumer & Governmental Affairs Bureau.

[FR Doc. 06–5840 Filed 6–27–06; 8:45 am]

BILLING CODE 6712–01–P

FEDERAL COMMUNICATIONS COMMISSION

[CG Docket No. 03–123; DA 06–1175]

Consumer & Governmental Affairs Bureau Reminds States and Telecommunications Relay Services (TRS) Providers That the Annual Summary of Consumer Complaints Concerning TRS is Due Monday, July 3, 2006

AGENCY: Federal Communications Commission.

ACTION: Notice.

SUMMARY: In this document, the Commission notifies the public, state Telecommunications Relay Services (TRS) programs, and interstate TRS providers that the annual consumer complaint log summaries are due. To assist the Commission in monitoring the service quality of TRS providers, the Commission requires state TRS programs and TRS providers that provide interstate TRS, interstate STS, interstate Spanish relay, interstate captioned telephone relay, VRS, and IP Relay to maintain and submit consumer complaints that allege violations of the federal TRS mandatory minimum standards. Complaint log summaries shall include, at a minimum, the number of complaints received that allege a violation of the federal TRS mandatory minimum standards, the date of the complaint, the nature of the complaint, the date of its resolution, and an explanation of the resolution.

DATES: State TRS programs and interstate TRS providers must file their annual consumer complaint log summary no later than July 3, 2006.

ADDRESSES: Federal Communications Commission, 445 12th Street, SW., Washington, DC 20554.

FOR FURTHER INFORMATION CONTACT: Pam Gregory, (202) 418–2498 (voice), (202) 418–1169 (TTY), or e-mail: *Pam.Gregory@fcc.gov.*

SUPPLEMENTARY INFORMATION: This is a summary of the Commission's document, DA 06–1175, released May 31, 2006. This document notifies state TRS programs and interstate TRS providers that the annual complaint log summary for complaints received between June 1, 2005, and May 31, 2006, is due on Monday, July 3, 2006. All filings must reference *CG Docket 03–123.* States and interstate TRS providers who choose to submit by paper must submit an original and four copies of each filing on or before Monday, July 3, 2006. To expedite the processing of complaint log summaries, states and interstate TRS providers are encouraged

to submit an additional copy to Attn: Pam Gregory, Federal Communications Commission, Consumer & Governmental Affairs Bureau, 445 12th Street, SW., Washington, DC 20554 or by e-mail at *Pam.Gregory@fcc.gov.* States and interstate TRS providers should also submit electronic disk copies of their complaint log summaries on a standard 3.5 inch diskette formatted in an IBM compatible format using Word 97 or compatible software. The diskette should be submitted in ''read-only'' mode and must be clearly labeled with the State or interstate TRS provider name, the filing date and captioned ''Complaint Log Summary.''

Filings can be sent by hand or messenger delivery, by electronic media, by commercial overnight courier, or by first-class or overnight U.S. Postal Service mail (although the Commission continues to experience delays in receiving U.S. Postal Service mail). The Commission's contractor will receive hand-delivered or messenger-delivered paper filings or electronic media for the Commission's Secretary at 236 Massachusetts Avenue, NE., Suite 110, Washington, DC 20002. The filing hours at this location are 8 a.m. to 7 p.m. All hand deliveries must be held together with rubber bands or fasteners. Any envelopes must be disposed of before entering the building. Commercial and electronic media sent by overnight mail (other than U.S. Postal Service Express Mail and Priority Mail) must be sent to 9300 East Hampton Drive, Capitol Heights, MD 20743. U.S. Postal Service first-class mail, Express Mail, and Priority Mail should be addressed to 445 12th Street, SW., Washington, DC 20554. All filings must be addressed to the Commission's Secretary, Marlene H. Dortch, Office of the Secretary, Federal Communications Commission, 445 12th Street, SW., Room TW–B204, Washington, DC 20554.

The full text of document DA 06–1175 and copies of any subsequently filed documents in this matter will be available for public inspection and copying during regular business hours at the FCC Reference Information Center, Portals II, 445 12th Street, SW., Room CY–A257, Washington, DC 20554. Document DA 06–1175 and copies of subsequently filed documents in this matter may also be purchased from the Commission's duplicating contractor at Portals II, 445 12th Street, SW., Room CY–B402, Washington, DC 20554. Customers may contact the Commission's contractor at their Web site *http://www.bcpiweb.com* or call 1–800–378–3160.

To request materials in accessible formats for people with disabilities (Braille, large print, electronic files, audio format), send an e-mail to *fcc504@fcc.gov* or call the Consumer & Governmental Affairs Bureau at (202) 418–0530 (voice), (202) 418–0432 (TTY). Document DA 06–1175, can also be downloaded in Word or Portable Document Format (PDF) at: *http://www.fcc.gov/cgb/dro.*

Synopsis

State TRS programs should report all complaints made to the state agency, as well as those made to the state's TRS provider. TRS providers that provide interstate TRS, interstate STS, interstate Spanish relay, interstate captioned telephone relay, VRS, and IP Relay are required to submit complaint log summaries. These logs are intended to provide an early warning system to the Commission of possible service quality problems.

Additionally, this information allows the Commission to determine whether a state or interstate TRS provider has appropriately addressed consumer complaints and to spot national trends that may lend themselves to coordinated solutions. This information further enables states to learn how other states are resolving complaints.

Federal Communications Commission.

Jay Keithley,

Deputy Chief, Consumer & Governmental Affairs Bureau.

[FR Doc. E6–9944 Filed 6–27–06; 8:45 am]

BILLING CODE 6712–01–P

FEDERAL COMMUNICATIONS COMMISSION

[DA 06–1284]

Announcement of Next Meeting Date and Agenda of Consumer Advisory Committee

AGENCY: Federal Communications Commission.

ACTION: Notice; announcement of meeting.

SUMMARY: This document announces the next meeting date and agenda of the Consumer Advisory Committee. The purpose of the Committee is to make recommendations to the Federal Communications Commission (''Commission'') regarding consumer issues within the jurisdiction of the Commission and to facilitate the participation of all consumers in proceedings before the Commission.

DATES: The next meeting of the Committee will take place on Friday, July 21, 2006, from 9 a.m. to 4 p.m.

ADDRESSES: Federal Communications Commission, 445 12th Street, SW., Washington, DC 20554

FOR FURTHER INFORMATION CONTACT: Scott Marshall, (202) 418–2809 (voice), (202) 418–0179 (TTY) or e-mail: *scott.marshall@fcc.gov.*

SUPPLEMENTARY INFORMATION: This is a summary of the Commission's Public Notice DA 06–1284 released June 16, 2006. The Commission announced the next meeting date and meeting agenda of its Consumer Advisory Committee.

Purpose and Functions

The purpose of the Committee is to make recommendations to the Commission regarding consumer issues within the jurisdiction of the Commission and to facilitate the participation of all consumers in proceedings before the Commission.

Meeting Agenda

At its July 21, 2006 meeting, the Committee will receive (1) a briefing by FCC staff regarding Agency activities; (2) recommendations from its TRS Working Group regarding captioned telephony, the existence and role of the Interstate TRS advisory Council, and the definition of ''effective communication'' for TRS purposes; (3) a revised recommendation from its Media Working Group regarding media ownership rules; (4) a recommendation from its Consumer Affairs Working Group regarding the Commission's consumer publications and outreach programs; and (5) a report of activities by its Rural and Underserved Populations Working Group. The full Committee may take action on any or all of these agenda items.

A copy of the June 16, 2006 Public Notice is available in alternate formats (Braille, cassette tape, large print or diskette) upon request. It is also posted on the Commission's Web site at *http://www.fcc.gov/cgb/cac.* Meeting minutes will be available for public inspection at the FCC headquarters building.

The Committee meeting will be open to the public and interested persons may attend the meeting and communicate their views. Members of the public will have an opportunity to address the Committee on issues of interest to them and the Committee. Written comments for the Committee may also be sent to the Committee's Designated Federal Officer, Scott Marshall.

The meeting site is fully accessible to people using wheelchairs or other mobility aids.

Meeting agendas and handouts will be provided in accessible format; sign

language interpreters, open captioning, and assistive listening devices will be provided on site. The meeting will be Webcast with open captioning at *http://www.fcc.gov/cgb/cac.* Request other reasonable accommodations for people with disabilities as early as possible; please allow at least 14 days advance notice. Include a description of the accommodation you will need including as much detail as you can. Also include a way we can contact you if we need more information. Send an e-mail to: *fcc504@fcc.gov* or call the Consumer & Governmental Affairs Bureau at (202) 418–0530 (voice), (202) 418–0432 (TTY).

Federal Communications Commission.

Monica S. Desai,

Chief, Consumer & Governmental Affairs Bureau.

[FR Doc. E6–10009 Filed 6–27–06; 8:45 am]

BILLING CODE 6712–01–P

FEDERAL COMMUNICATIONS COMMISSION

[Report No. 2774]

Petitions for Reconsideration of Action in Rulemaking Proceeding

June 16, 2006.

Petitions for Reconsideration have been filed in the Commission's Rulemaking proceeding listed in this Public Notice and published pursuant to 47 CFR Section 1.429(e). The full text of these documents is available for viewing and copying in Room CY–B402, 445 12th Street, SW., Washington, DC or may be purchased from the Commission's copy contractor, Best Copy and Printing, Inc. (BCPI) (1–800–378–3160). Oppositions to these petitions must be filed by July 13, 2006. See Section 1.4(b)(1) of the Commission's rules (47 CFR 1.4(b)(1)). Replies to an opposition must be filed within 10 days after the time for filing oppositions has expired.

Subject: In the Matter of Junk Fax Prevention Act of 2005 (CG Docket No. 05–338); In the Matter of Rules and Regulations Implementing the Telephone Consumer Protection Act of 1991 (CG Docket No. 02–278)

Number of Petitions Filed: 2.

Marlene H. Dortch,

Secretary.

[FR Doc. 06–5858 Filed 6–27–06; 8:45 am]

BILLING CODE 6712–01–P

FEDERAL MARITIME COMMISSION

Notice of Agreements Filed

The Commission hereby gives notice of the filing of the following agreements under the Shipping Act of 1984. Interested parties may submit comments on an agreement to the Secretary, Federal Maritime Commission, Washington, DC 20573, within ten days of the date this notice appears in the **Federal Register**. Copies of agreements are available through the Commission's Office of Agreements (202–523–5793 or *tradeanalysis@fmc.gov*).

Agreement No.: 011914–001.

Title: CP/CCNI Med-Gulf Space Charter Agreement.

Parties: CP Ships (USA), LLC and Compania Chilena de Navegacion Interoceanica.

Filing Party: Wayne R. Rohde, Esq.; Sher & Blackwell LLP; 1850 M Street, NW.; Suite 900; Washington, DC 20036.

Synopsis: The amendment deletes CP Ships, adds Hapag-Lloyd Container Linie GmbH, makes corresponding changes throughout the agreement, changes the name of the agreement, and restates the agreement.

Agreement No.: 011963.

Title: Maersk Line/USL Space Charter Agreement.

Parties: A.P. Moller-Maersk A/S and U.S. Lines Limited.

Filing Party: Wayne R. Rohde, Esq.; Sher & Blackwell LLP; 1850 M Street, NW.; Suite 900; Washington, DC 20036.

Synopsis: The agreement would authorize Maersk Line to charter space to USL in the trade between ports on the Pacific Coast of the United States and ports in the People's Republic of China (including Hong Kong) and engage in related cooperative activities.

Agreement No.: 011964.

Title: Maersk Line/MOL Space Charter Agreement.

Parties: A.P. Moller-Maersk A/S (''Maersk Line'') and Mitsui O.S.K. Lines, Ltd. (''MOL'').

Filing Party: Wayne R. Rohde, Esq.; Sher & Blackwell LLP; 1850 M Street, NW.; Suite 900; Washington, DC 20036.

Synopsis: The agreement authorizes Maersk Line to charter space to MOL for the carriage of loaded containers eastbound and for the carriage of empty containers westbound in the Japan-California trade.

Agreement Nos.: 201132–003, –004, –005, –006, –007.

Title: New York/New Jersey-Port Newark Container Terminal LLC Lease (Lease No. L–PN–264).

Parties: The Port Authority of New York and New Jersey and Port Newark Container Terminal LLC.

Filing Party: Patricia W. Duemig; Senior Property Representative; The Port Authority of New York and New Jersey; New Jersey Marine Terminals; 260 Kellogg Street; Port Newark, NJ 07114.

Synopsis: The amendments update the existing lease between the parties to provide for the deepening of the berth, the leasing of certain open areas, and to allow for subleasing and sub-subleasing agreements for specific purposes.

By Order of the Federal Maritime Commission.

Dated: June 23, 2006.

Bryant L. VanBrakle, Secretary.

[FR Doc. 06–5849 Filed 6–27–06; 8:45 am]

BILLING CODE 6730–01–P

FEDERAL MARITIME COMMISSION

Ocean Transportation Intermediary License Revocations

The Federal Maritime Commission hereby gives notice that the following Ocean Transportation Intermediary licenses have been revoked pursuant to section 19 of the Shipping Act of 1984 (46 U.S.C. app. 1718) and the regulations of the Commission pertaining to the licensing of Ocean Transportation Intermediaries, 46 CFR part 515, effective on the corresponding date shown below:

License Number: 018982F.
Name: Akamai Freight Services, LLC.
Address: 4734 N. Tenth Place, Phoenix, AZ 85014.
Date Revoked: June 9, 2006.
Reason: Failed to maintain a valid bond.

License Number: 000033F.
Name: Alaska Traffic Consultants Inc.
Address: 2214 4th Avenue, South, Seattle, WA 98134.
Date Revoked: May 23, 2006.
Reason: Surrendered License voluntarily.

License Number: 018576N.
Name: Aline Transit Inc.
Address: P.O. Box 520685, Flushing, NY 11352–0685.
Date Revoked: June 12, 2006.
Reason: Surrendered License voluntarily.

License Number: 019036N.
Name: Apex Maritime Co., (NY) Inc.
Address: 71 S. Central Avenue, Suite 307, Valley Stream, NY 11580.
Date Revoked: May 31, 2006.
Reason: Surrendered License voluntarily.

License Number: 016571N.
Name: Arrow Worldwide Logistics, Inc.
Address: 137 Eucalyptus Drive, El Segundo, CA 90245.

Date Revoked: June 8, 2006.
Reason: Failed to maintain a valid bond.

License Number: 018360N.
Name: Canon Express Inc.
Address: 5250 W. Century Blvd., Suite 508, Los Angeles, CA 90045.
Date Revoked: June 9, 2006.
Reason: Failed to maintain a valid bond.

License Number: 018068N.
Name: Gift and Parcel, Inc. dba Grupo Pilipino (GP) Express.
Address: 4700 Mission Street, San Francisco, CA 94112.
Date Revoked: June 2, 2006.
Reason: Failed to maintain a valid bond.

License Number: 018694N.
Name: Global Parcel System LLC.
Address: 8304 Northwest 30th Terrace, Miami, FL 33122.
Date Revoked: June 9, 2006.
Reason: Failed to maintain a valid bond.

License Number: 000214F.
Name: International Sea & Air Shipping Corp.
Address: 5 Lexington Avenue, East Brunswick, NJ 08816.
Date Revoked: June 5, 2006.
Reason: Surrendered License voluntarily.

License Number: 018931N.
Name: JX Global, Inc. dba GFX Logistics Group.
Address: 550 E. Carson Plaza Drive, Suite 208, Carson, CA 90746.
Date Revoked: June 9, 2006.
Reason: Failed to maintain a valid bond.

License Number: 018391N.
Name: LCL Cargo Services Inc.
Address: 8100 NW 29th Street, Miami, FL 33122.
Date Revoked: June 2, 2006.
Reason: Surrendered License voluntarily.

License Number: 006288F.
Name: Merzario USA, Inc.
Address: 17 Battery Place, Suite 730, New York, NY 10004.
Date Revoked: May 26, 2006.
Reason: Failed to maintain a valid bond.

License Number: 015385N.
Name: Plane Cargo Inc. dba Marine Cargo.
Address: 753 Port America Pl., #102, Grapevine, TX 76051.
Date Revoked: June 8, 2006.
Reason: Failed to maintain a valid bond.

License Number: 002364N.
Name: Reiko Gibbs Soejima and James Thomas dba Excel International Forwarders.
Address: 800 E. Wardlow Road, Long Beach, CA 90807.
Date Revoked: May 27, 2006.
Reason: Failed to maintain a valid bond.

License Number: 016012F.
Name: Samari Global Trade, Inc.
Address: 1310 Beach Avenue, Bronx, NY 10472.
Date Revoked: June 4, 2006.
Reason: Failed to maintain a valid bond.

License Number: 018328F.
Name: Sentry Cargo International, Inc.
Address: 8080 NW 71st Street, Miami, FL 33166.
Date Revoked: June 3, 2006.
Reason: Failed to maintain a valid bond.

License Number: 018527N.
Name: Stern, Rogers & Co., Inc.
Address: 10 East 39th Street, Suite #1121, New York, NY 10016.
Date Revoked: May 28, 2006.
Reason: Failed to maintain a valid bond.

License Number: 018883NF.
Name: Wastaki Freight International, Inc.
Address: 9820 Atlantic Drive, Miramar, FL 33025.
Date Revoked: June 8, 2006.
Reason: Failed to maintain valid bonds.

Sandra L. Kusumoto,
Director, Bureau of Certification and Licensing.
[FR Doc. 06–5857 Filed 6–27–06; 8:45 am]
BILLING CODE 6730–01–P

FEDERAL MARITIME COMMISSION

Ocean Transportation Intermediary Licenses Correction

In the OTI Applicant Notice published in the **Federal Register** on June 7, 2006 (71 FR 32962) reference to the name of OCT Corporation dba OCT Marine dba OCT Global Logistics is corrected to read:

''CCT Corporation dba CCT Marine dba CCT Global Logistics''

Dated: June 23, 2006.

Bryant L. VanBrakle,
Secretary.
[FR Doc. 06–5848 Filed 6–27–06; 8:45 am]
BILLING CODE 6730–01–P

FEDERAL MARITIME COMMISSION

Ocean Transportation Intermediary License

Reissuances

Notice is hereby given that the following Ocean Transportation Intermediary licenses have been reissued by the Federal Maritime Commission pursuant to section 19 of the Shipping Act of 1984, (46 U.S.C. app. 1718) and the regulations of the Commission pertaining to the licensing of Ocean Transportation Intermediaries, 46 CFR part 515.

License No.	Name/address	Date Reissued
018694F	Global Parcel System LLC, 8304 Northwest 30th Terrace, Miami, FL 33122	June 9, 2006.
013214N	Great Way Trading & Transportation, Inc. dba G.W. Trans-World Co., 501 S. Airport Blvd. 2nd Floor, South, San Francisco, CA 94080.	May 8, 2006.
019250N	MLR Export Inc. dba MLR Export Consolidations, 8090 NW. 71 Street, Miami, FL 33166	May 1, 2006.
001763NF	Vertex Freight Systems, Inc., 8150 NW. 21st Street, Doral, FL 33122	April 30, 2006.

Sandra L. Kusumoto,
Director, Bureau of Certification and Licensing.
[FR Doc. 06–5847 Filed 6–27–06; 8:45 am]
BILLING CODE 6730–01–P

FEDERAL MARITIME COMMISSION

Ocean Transportation Intermediary License Applicants

Notice is hereby given that the following applicants have filed with the Federal Maritime Commission an application for license as a Non-Vessel-Operating Common Carrier and Ocean Freight Forwarder—Ocean Transportation Intermediary pursuant to section 19 of the Shipping Act of 1984 as amended (46 U.S.C. app. 1718 and 46 CFR part 515).

Persons knowing of any reason why the following applicants should not receive a license are requested to contact the Office of Transportation

Intermediaries, Federal Maritime Commission, Washington, DC 20573.

Non-Vessel-Operating Common Carrier Ocean Transportation Intermediary Applicants:

Lorimer Cargo Express, Inc., 1924 S.W. 100th Ave., Miramar, FL 33025, Officer: Rafael G. Polanco, President (Qualifying Individual).

La Ocean Freight Inc., 3428 Vantage Point Drive, Rowland Heights, CA 91748, Officers: Catherine Tsai, Vice President (Qualifying Individual), Christin Liu, President.

Comis International, 690 Knox Street, #220, Torrance, CA 90502, Frank Noah, Sole Proprietor.

Advanced Marketing Services, Inc., 5880 Oberlin Drive, Suite 400, San Diego, CA 92121, Officers: Keli Parker, Vice President (Qualifying Individual), Bruce C. Myers, President.

Non-Vessel-Operating Common Carrier and Ocean Freight Forwarder Transportation Intermediary Applicants:

United Global Logistics Inc., 227 Bryant Avenue, Floral Park, NY 11001, Officers: Mohamed Yeheya Khan, President (Qualifying Individual), Sharmaine Enoka Khan, Vice President.

Marine Services International, Inc., 14502 South Industrial Avenue, Cleveland, OH 44137, Officers: Michelle Lynn Frank, President (Qualifying Individual), David Michael Magden, Vice President.

Panda Logistics USA, Inc., 19600 S. Alameda Street, Suite #1, E. Rancho Dominguez, CA 90221, Officer: Cooper Chao, CEO (Qualifying Individual).

Royal Pacific Shipping Co., 58 Leslie Street, Newark, NJ 07108, Officers: Atta Boamah, President (Qualifying Individual), Alice Boamah, Vice President.

Santo Domingo Shipping Inc., 4707 NW. 72nd Avenue, Miami, FL 33166, Officers: Mercedes D. Rodriguez, Vice President (Qualifying Individual), Carlos J. Rodriguez, President.

DFYoung-Del Med, Inc., 1235 Westlakes Drive, Suite 255, Berwyn, PA 19312–2401, Officers: Aaron Wesley Wyatt, IV, Vice President (Qualifying Individual), John Hardy, Vice President.

Yavid Corporation, 5579 NW., 72 Avenue, Miami, FL 33166, Officers: Luis Vidal, President (Qualifying Individual), Ramona de Lourdes Gonzalez, Director.

ACE Logistics, LLC, 11188 Salentino Avenue, Las Vegas, NV 89138, Officer: Mamerto, S. Mercado, Operating Manager (Qualifying Individual).

Ocean Freight Forwarder—Ocean Transportation Intermediary Applicants:

Login Logistics, LLC, 5230 Pacific Concourse Drive, #105, Los Angeles, CA 90045, Officers: Steen Marcuslund, Manager (Qualifying Individual), John Fitzpatrick, Manager.

Upak WeShip, Inc., 10610 Iron Bridge Road, Unit 6, Jessup, MD 20794, Officers: Allison Elizabeth Kane, President (Qualifying Individual), Mark Nash, Vice President.

Dated: June 23, 2006.

Bryant L. VanBrakle,

Secretary.

[FR Doc. 06–5856 Filed 6–27–06; 8:45 am]

BILLING CODE 6730–01–P

FEDERAL RESERVE SYSTEM

[Docket No. OP–1259]

Policy on Payments System Risk

AGENCY: Board of Governors of the Federal Reserve System.

ACTION: Policy statement; request for comment.

SUMMARY: The Board requests comments on proposed changes to Part I of its Policy on Payments System Risk (PSR policy) addressing risk management in payments and settlement systems. The proposed policy changes include (1) incorporating into the PSR policy the Recommendations for Central Counterparties (Recommendations for CCP) as the Board's minimum standards for central counterparties, (2) clarifying the purpose of Part I of the policy and revising its scope with regard to central counterparties, and (3) establishing an expectation that systemically important systems disclose publicly self-assessments against the Core Principles for Systemically Important Payment Systems (Core Principles), Recommendations for Securities Settlement Systems (Recommendations for SSS), or Recommendations for CCP, as appropriate, demonstrating the extent to which these systems meet the principles or minimum standards. The Board is also making other technical changes.

DATES: Comments must be received by September 22, 2006.

ADDRESSES: You may submit comments, identified by Docket No. OP–1259, by any of the following methods:

- *Agency Web Site: http://www.federalreserve.gov.* Follow the instructions for submitting comments at *http://www.federalreserve.gov/generalinfo/foia/ProposedRegs.cfm.*
- *Federal eRulemaking Portal: http://www.regulations.gov.* Follow the instructions for submitting comments.
- *E-mail: regs.comments@federalreserve.gov.* Include the docket number in the subject line of the message.
- *Fax:* (202) 452–3819 or (202) 452–3102.
- *Mail:* Address to Jennifer J. Johnson, Secretary, Board of Governors of the Federal Reserve System, 20th Street and Constitution Avenue, NW., Washington, DC 20551.

All public comments will be made available on the Board's Web site at *http://www.federalreserve.gov/generalinfo/foia/ProposedRegs.cfm* as submitted, unless modified for technical reasons. Accordingly, comments will not be edited to remove any identifying or contact information. Public comments may also be viewed electronically or in paper in Room MP–500 of the Board's Martin Building (20th and C Streets, NW.) between 9 a.m. and 5 p.m. on weekdays.

FOR FURTHER INFORMATION CONTACT: Jeff Stehm, Assistant Director (202/452–2217), Division of Reserve Bank Operations and Payment Systems, or Jennifer Lucier, Senior Financial Services Analyst (202/872–7581), Division of Reserve Bank Operations and Payment Systems; for the hearing impaired only: Telecommunications Device for the Deaf, 202/263–4869.

SUPPLEMENTARY INFORMATION:

I. Background

Since the early 1980s, the Board has published and periodically revised a series of policies encouraging the reduction and management of risks in payments and securities settlement systems.[1] In 1992, the Board issued its ''Policy Statement on Payments System Risk,'' which provided a comprehensive statement of its previously adopted policies regarding payments system risk reduction, including risk management in private large-dollar funds transfer networks, private delivery-against-payment securities systems, offshore dollar clearing and netting systems, and private small-dollar clearing and settlement systems.[2]

During this same period, the Federal Reserve also worked with other central

[1] See 50 FR 21120, May 22, 1985; 52 FR 29255, August 6, 1987; and 54 FR 26104 and 26092, June 21, 1989.

[2] 57 FR 40455, September 3, 1992.

banks and securities regulators to develop standards to strengthen payments and securities settlement infrastructures and to promote financial stability. These efforts initially produced the Lamfalussy Minimum Standards, which were incorporated into the Board's PSR policy in 1994.[3] More recently, this work resulted in the publication of the Core Principles and the Recommendations for SSS in 2001, which were incorporated into the Board's PSR policy in 2004.[4] [5] The Core Principles extended and replaced the Lamfalussy Minimum Standards, while the Recommendations for SSS provided, for the first time, explicit standards for securities settlement systems.

In addition to establishing specific principles and standards, the Core Principles and Recommendations for SSS call for central banks to state clearly their roles and policies regarding payments and securities settlement systems, assess compliance with the Core Principles and the Recommendations for SSS when overseeing relevant systems, and coordinate with other authorities in overseeing systems. Moreover, the Core Principles and Recommendations for SSS are intended to apply to systems operated by both central banks and the private sector.

Concurrent with the drafting and adoption of the 2004 policy revisions, the Federal Reserve was working with the CPSS and IOSCO to finalize the Recommendations for CCP.[6] These recommendations establish minimum standards for central counterparty risk management, operational reliability, efficiency, governance, transparency, and regulation and oversight. The Recommendations for CCP build upon the Recommendations for SSS and supersede those recommendations where central counterparties are concerned (these two sets of recommendations are collectively referred to as the ''CPSS–IOSCO Recommendations''). At the time it incorporated the Core Principles and Recommendations for SSS into the PSR policy, the Board noted that the CPSS and IOSCO were developing the Recommendations for CCP and that it would review the Recommendations for CCP at a later time and determine whether it would be appropriate to incorporate them into its PSR policy.

II. Discussion of Proposed Policy Changes

The policy changes proposed by the Board include (1) incorporating into the PSR policy the Recommendations for CCP as the Board's minimum standards for central counterparties, (2) clarifying the purpose of Part I of the policy and revising its scope with regard to central counterparties, and (3) establishing an expectation that systemically important systems disclose publicly self-assessments against the Core Principles, Recommendations for SSS, or Recommendations for CCP demonstrating the extent to which these systems meet the principles or minimum standards. The Board is also making other technical changes.

A. Incorporation of the Recommendations for CCP

The Board is proposing to incorporate the Recommendations for CCP with no modifications as the Board's minimum standards for central counterparties. Central counterparties occupy an important place in the financial system, interposing themselves between counterparties to financial transactions. Given a central counterparty's position in a market, its risk management practices can have implications for the stability of the financial system and pose risks to the Federal Reserve. The Board believes the Recommendations for CCP are an important framework for promoting sound risk management in central counterparties and believes that adherence to these recommendations can promote financial stability. The Federal Reserve, along with the Securities and Exchange Commission and the Commodity Futures Trading Commission, were actively involved in developing these recommendations, which reflect broad input and a balanced view of acceptable risk management practices.

The incorporation of the Recommendations for CCP into the PSR policy continues the Board's long-standing interest in the safety and soundness of the nation's payments and settlement systems. The Board believes that its incorporation of the Recommendations for CCP continues its past efforts to adopt appropriate international standards for key payments and settlement systems and to enhance the understanding and management of risks by users and other stakeholders in these systems. The Board also believes that this change is consistent with the spirit and intention of the 2004 PSR policy revisions, clarifying the Board's policy objectives and expectations for payments and settlement systems subject to its authority, and providing further guidance on how it expects systems to manage and disclose their risks. Accordingly, the Board is proposing to incorporate the Recommendations for CCP into the policy to highlight the importance of central counterparties to the financial markets and to demonstrate the Board's desire to encourage the use of Recommendations for CCP globally in cooperation with other domestic and foreign financial system authorities.

B. Purpose and Scope of Part I of the PSR Policy

In support of incorporating the Recommendations for CCP, the Board is proposing to clarify the purpose of Part I of the policy and revise its scope with regard to central counterparties. First, the Board is proposing to revise the purpose of Part I of the PSR policy to set forth the Board's views and related principles and minimum standards regarding the management of risks in payments and settlement systems generally. A range of payments and settlement systems operate in the financial markets and a failure in one or more of them could affect financial stability and expose the Federal Reserve to certain risks. While the Federal Reserve does not directly oversee all of these systems, it does have a fundamental interest in financial stability for the financial system as whole. Robust risk management by these systems plays an important role in maintaining financial stability. Therefore, the Board is proposing to

[3] 59 FR 67534, December 29, 1994. The Lamfalussy Minimum Standards were set out in the ''Report of the Committee on Interbank Netting Schemes of the Central Banks of the Group of Ten Countries,'' published by the Bank for International Settlements in November 1990. See the full report at *http://www.bis.org/publ/cpss04.pdf.*

[4] The Core Principles were developed by the Committee on Payment and Settlement Systems (CPSS) of the Central banks of the Group of Ten countries, and the Recommendations were developed by the CPSS in conjunction with the Technical Committee of the International Organization of Securities Commissions (IOSCO). In addition to the Federal Reserve, the Securities and Exchange Commission and the Commodity Futures Trading Commission participated in the development of the Recommendations for SSS. Both the Core Principles and the Recommendations for SSS were published by the CPSS and IOSCO for public comment before being adopted in their final form, and in their final form have been adopted as part of the Financial Stability Forum's Compendium of Standards that are widely recognized and endorsed by U.S. authorities as integral to strengthening global financial stability. The full reports on the Core Principles and the Recommendations for SSS are available at *http://www.bis.org/publ/cpss43.htm* and *http://www.bis.org/publ/cpss46.htm*, respectively.

[5] 69 FR 69926, December 1, 2004.

[6] Final recommendations were issued in November 2004. In addition to the Federal Reserve, the Securities and Exchange Commission and the Commodity Futures Trading Commission also participated in the development of the Recommendations for CCP. The full report on the Recommendations for CCP is available at *http://www.bis.org/publ/cpss64.htm.*

revise its policy to broadly state its views on risk management for all systems that could affect financial stability.

In this context, the Board encourages key payments and settlement systems and their primary regulators to take the principles and minimum standards in the PSR policy into consideration in the design, operation, monitoring, and assessment of these systems. Private- and public-sector systems subject to the Board's authority, however, are expected to meet the Board's expectations as described in the PSR policy. The Board's proposed revisions also clarify this latter point.

Second, the Board is also proposing to revise the scope to include central counterparties as key systems that could affect financial stability. The Board's current PSR policy applies to public- and private-sector ''payments and securities settlement systems,'' that meet certain volume thresholds. The term ''securities settlement system'' currently includes foreign-exchange settlement systems and central counterparties in the securities markets.[7] The Board is proposing to revise the scope to refer to ''settlement systems,'' which can include a range of systems, including a settlement system for foreign exchange transactions, a securities settlement system, or a central counterparty. To affect this change, the Board has deleted the exemption for clearance and settlement systems for exchange-traded futures and options.

The Board recognizes that several of the systems within the revised scope of Part I of the policy are supervised, regulated, or overseen by other financial system authorities. Where the Board does not have authority or does not have exclusive authority over systems covered by the policy, it will work with other domestic and foreign financial system authorities to promote the Core Principles and CPSS–IOSCO Recommendations and the objectives of this policy.[8] The Board believes clarifying the purpose of Part I and revising its scope to include the full range of current and future central counterparties for contracts in financial markets are warranted for several reasons.

First, the Board's policy rests on a fundamental interest of the Federal Reserve as the central bank in financial stability and the role that payments and settlement systems play in promoting and maintaining resilience in the financial system. Therefore, the Board believes that its policy should reflect the Board's views on risk management for the full range of systems that clear and settle payments and other financial instruments that could affect financial stability, including central counterparties.

Second, revising the scope will enable the policy to conform to changes in the payments and settlement landscape as it continues to evolve. The benefits of central counterparty clearing have been considered and implemented in multiple markets, including the securities, options, and futures markets. In addition, the financial services industry has proposed or implemented central counterparties for foreign exchange transactions in the past, such as Multinet and ECHO,[9] and continues to debate the efficacy of central counterparties for over-the-counter derivatives products. Should the industry pursue the implementation of central counterparty clearing models in these markets, introduce new systems, or redesign existing ones, the designers and owners of these systems will have clear ex ante knowledge of the Board's views and expectations regarding risk management for central counterparties as they design and develop their systems.

Finally, in their role as providers of payments and settlement services, the Reserve Banks provide settlement services to a variety of private-sector payments and settlement arrangements. In providing such services, the Reserve Banks need to consider the risks that they might incur should a system fail to settle. One reason the Board developed its PSR policy was to address the risks that systems present not only to the financial system, but also to the Federal Reserve Banks. Revising the scope to cover the full range of potential payments and settlement systems, therefore, would provide a defined set of principles and standards that the Reserve Banks could look to for assessing the risks of systems seeking settlement services, if needed.

C. Self-Assessments by Systemically Important Systems

The Board believes that the effective implementation of the risk management concepts embodied in the Core Principles and CPSS–IOSCO Recommendations will further strengthen the financial system. The Core Principles and CPSS–IOSCO Recommendations establish an expectation that a system will disclose sufficient information to allow users and other stakeholders to identify, understand, and evaluate accurately the risks and costs of using the system's services. Central banks as well as systems have pursued a variety of disclosure practices, resulting in varying levels of information being disseminated to users and the public generally. Given these varying practices, users and others may find it difficult to obtain access to sufficient information in order to assess a particular system against internationally accepted principles or minimum standards. The Board believes that broadening the availability of information concerning a system's risk management controls, governance, and legal framework, for example, can assist users and other interested persons in evaluating and managing their risk exposures while furthering global financial stability.

The Board acknowledges that disclosure can be achieved in several ways, including through public disclosure of assessments by the central bank. Certain central banks in other countries functioning as overseers publish oversight reports that have included summarized and, in some cases, detailed assessments of systemically important systems against the same principles and minimum standards in the Board's policy. The Board, however, supervises as well as oversees certain systemically important systems. In order to produce robust assessments, it is important for the Board to draw upon all relevant and available information, including supervisory information that traditionally has been treated confidentially. This constrains the ability of the Board to issue a public assessment that relies, at least in part, on confidential information. In this context, and in order to promote

[7] The Board's current PSR policy explicitly does not cover central counterparties for exchange-traded futures and options, and is silent on the coverage of central counterparties for foreign exchange contracts and over-the-counter derivative contracts.

[8] The revised scope will include central counterparties to contracts in financial markets, including derivatives and foreign exchange markets. The Board acknowledges that the policy's current $5 billion threshold and factors for considering a system's systemic importance may not be useful benchmarks for central counterparties operating in these markets. Therefore, the Board encourages the appropriate financial system authorities to apply appropriate benchmarks or standards for determining whether central counterparties should meet specific risk management expectations, such as those included in the policy, or whether they should meet the Recommendations for CCP.

[9] In 1996, Multinet was authorized as a limited-purpose bank under New York Law to provide multilateral netting services; Multinet, however, never became operational. ECHO, Exchange Clearing House Limited, was a London-based clearing house that, from 1995 to 1997, provided multilateral netting and settlement of spot and forward foreign exchange obligations for its users. In 1997, Multinet and ECHO merged forming the basis for the Continuous Linked Settlement (CLS) Bank which currently provides payment-versus-payment services to its users trading in the 15 currencies eligible for settlement at CLS.

appropriate disclosure, the Board believes the individual system operators are well positioned to make informed, accurate disclosures to meet both the information needs of users and other persons and the stated policy objectives.

Therefore, in furtherance of its objectives, the Board is proposing to revise its policy to establish an expectation that systemically important systems subject to the Board's authority will complete self-assessments against the principles or minimum standards, as applicable, in the policy and publicly disclose those assessments. The Board is proposing several guidelines to assist the system operator in developing a self-assessment consistent with the Board's expectations.

The Board expects the content of a self-assessment to be comprehensive and objective. The Board is proposing that a system determine its level of implementation and state whether each principle or minimum standard is observed, broadly observed, partly observed, or non-observed; all conclusions should be fully supported in the self-assessment. In documenting the basis for the self-assessment, however, the Board does not expect the system to disclose sensitive information that may expose system vulnerabilities, such as specific business continuity plans. For further guidance in developing a self-assessment and understanding the relevant principles or minimum standards, the Board would encourage a system operator to consult the interpretation discussion in the Core Principles or the assessment methodology for the relevant CPSS–IOSCO Recommendations as further guidance. A system may also consult the Board for assistance with respect to the individual principles and minimum standards and the completion of its self-assessment.

The Board believes that in order for a self-assessment to be useful to users and others in understanding and managing their risks the content must be accurate and readily available. Therefore, the Board is proposing that the system's senior management and board of directors review and approve a self-assessment prior to publication to ensure system accountability for accuracy and completeness. To achieve broad disclosure, the Board is proposing that the system publish its self-assessment on its public Web site. The Board is also proposing that a system complete and publish its first self-assessment within twelve months of the effective date of the final policy changes. Lastly, to ensure continued accuracy, the Board is proposing that the system update statements in its assessment following material changes to the system or its environment, and, at a minimum, review annually its self-assessment.

As part of its ongoing oversight of systemically important payments and settlement systems over which it exercises authority, the Federal Reserve will review published self-assessments and, if the Federal Reserve materially disagrees with the content of a self-assessment of a system, it will communicate its concerns to the system's senior management or the board of directors, as appropriate. The Federal Reserve may also discuss its concerns with other relevant financial system authorities, as appropriate. The Board would evaluate the effectiveness of this self-assessment framework after a few years to determine if the self-assessment process is meeting its policy objectives.

III. Request for Comment

The Board requests comment on the proposed revisions to its PSR policy. In particular, the Board requests comment on whether the revisions to the scope and application of the policy are sufficiently clear and provide the appropriate coverage to achieve the policy's intended objectives. The Board will carefully consider comments submitted to ensure the final self-assessment framework is appropriate for all systems subject to this policy and subject to the Board's authority. The Board also requests comment on the following specific questions:

1. Are the proposed policy objectives clear?
2. Is the incorporation of the Recommendations for CCP reasonable and appropriate?
3. Are the clarifications to the purpose and revisions to the scope with regard to central counterparties reasonable and appropriate?
4. Do you believe that self-assessments are an effective method to facilitate the availability of information for users and other interested parties to identify, understand, and evaluate the risks of a systemically important system?
5. Are the proposed guidelines regarding self-assessments clear and do they provide sufficient guidance to system operators?
6. Do the implementation measures included in the Core Principles and the assessment methodologies for the CPSS–IOSCO Recommendations provide sufficiently clear and useful frameworks to complete comprehensive and objective self-assessments? If not, please explain. Are there alternatives to these frameworks that can provide equally robust and objective self-assessments?
7. Will the inclusion of ratings (observed, broadly observed, partly observed, and non-observed) be helpful to persons evaluating a particular systemically important system against the principles and minimum standards? What are the pros and cons of including self-ratings as part of self-assessments?
8. Are there any drawbacks to the public disclosure of self-assessments? If so, what are they? Given the stated policy objectives, are there valid reasons to consider a more limited distribution of self-assessments and/or self-ratings (e.g., only to a system's users)?
9. Is the proposed twelve month time frame for a system to complete and publish its first self-assessment appropriate?
10. Are the proposed triggers for reviewing and updating a self-assessment appropriate? If not, what other triggers would ensure published self-assessments remain accurate?

IV. Regulatory Flexibility Act Analysis

The Board has determined that this proposed policy statement would not have a significant economic impact on a substantial number of small entities. The proposal would require payments and securities settlement systems to address material risks in their systems. The proposal is designed to minimize regulatory burden on smaller systems that do not raise material risks.

V. Competitive Impact Analysis

The Board has established procedures for assessing the competitive impact of rule or policy changes that have a substantial impact on payments system participants.[10] Under these procedures, the Board will assess whether a change would have a direct and material adverse effect on the ability of other service providers to compete effectively with the Federal Reserve in providing similar services due to differing legal powers or constraints, or due to a dominant market position of the Federal Reserve deriving from such differences. If no reasonable modifications would mitigate the adverse competitive effects, the Board will determine whether the anticipated benefits are significant enough to proceed with the change despite the adverse effects. The proposed policy revisions provide that Reserve Bank systems will be treated similarly to private-sector systems and thus will have no material adverse effect on the ability of other service providers

[10] These procedures are described in the Board's policy statement ''The Federal Reserve in the Payments System,'' as revised in March 1990 (55 FR 11648, March 29, 1990).

to compete effectively with the Federal Reserve Banks in providing payments and securities settlement services.

VI. Paperwork Reduction Act

In accordance with the Paperwork Reduction Act of 1995 (44 U.S.C. Ch. 3506; 5 CFR 1320 Appendix A.1), the Board reviewed the policy statement under the authority delegated to the Board by the Office of Management and Budget. The Federal Reserve may not conduct or sponsor, and an organization is not required to respond to, this information collection unless it displays a currently valid OMB control number. An OMB control number will be assigned upon approval of the new information collection.

The collection of information that is proposed to be implemented by this notice is found in Part I of the Board's Policy on Payments System Risk (PSR policy). This information is required to evidence compliance with the requirements of the PSR policy. The respondents are systemically important systems, as defined in the PSR policy.

The Board proposes that systemically important systems, subject to the Board's authority, complete initial comprehensive self-assessments and thereafter, review and update self-assessments annually or as otherwise provided in the PSR policy. The Board also proposes that these self-assessments be reviewed and approved by the system's senior management and board of directors. Upon approval and in order to achieve broad disclosure, the systems should publish self-assessments on their public Websites. In order to help minimize burden the Board is proposing guidelines to assist system operators in developing self-assessments consistent with the Board's expectations.

The proposed burden for the initial reporting and disclosure requirements associated with this policy statement is estimated to be on average 310 hours per system (ranging from 200 to 400 hours). The burden includes: 215 hours for staff to review the requirements and complete the self-assessment; 30 hours for senior management to review that each principle was fully assessed; 50 hours for the board of directors to review and approve the self-assessment; and 15 hours for type-setting and technical editing of the document and preparing the website. The Board estimates that currently about three private-sector systems are systemically important and subject to the Board's authority; therefore, the total burden for systems under the Board's authority is estimated to 930 hours to complete the initial self-assessments.

Following the initial assessment, the Board estimates that the burden will decrease for a system to conduct an annual review and report and disclose updates to its self-assessment. The proposed burden for annual reviews and updates associated with this policy is estimated to be on average 70 hours per system (ranging from 50–100 hours). The burden includes: 25 hours for staff to review the self-assessment and update relevant sections; 15 hours for senior management to review the self-assessment; 25 hours for the board of directors to review and approve the self-assessment; and 5 hours for technical editing and Website activities. The total burden for the approximately three private-sector systems under the Board's authority would be an estimated 210 hours. These initial estimates will be adjusted in the future, as appropriate.

Comments are invited on a. Whether the proposed collection of information is necessary for the proper performance of the Federal Reserve's functions, including whether the information has practical utility; b. The accuracy of the Federal Reserve's estimate of the burden of the proposed information collection, including the cost of compliance; c. Ways to enhance the quality, utility, and clarity of the information to be collected; and d. Ways to minimize the burden of information collection on respondents, including through the use of automated collection techniques or other forms of information technology. Comments on the collections of information should be sent to Secretary, Board of Governors of the Federal Reserve System, Washington, DC 20551, with copies of such comments to be sent to the Office of Management and Budget, Paperwork Reduction Project (7100–PSR Policy), Washington, DC 20503.

VII. Federal Reserve Policy on Payments System Risk

Introduction [Revised]
Risks in Payments and Settlement Systems [Revised]
I. Risk Management in Payments and Settlement Systems [Revised]
A. Scope
B. General Policy Expectations
C. Systemically Important Systems
1. Principles for Systemically Important Payments Systems
2. Minimum Standards for Systemically Important Securities Settlement Systems and Central Counterparties
II. Federal Reserve Daylight Credit Policies [No Change]
A. Daylight Overdraft Definition and Measurement
B. Pricing
C. Net Debit Caps
D. Collateral
E. Special Situations
F. Monitoring
G. Transfer-size Limit on Book-Entry Securities
III. Other Policies [No Change]
A. Rollovers and Continuing Contracts

Introduction

Payments and settlement systems are critical components of the nation's financial system. The smooth functioning of these systems is vital to the financial stability of the U.S. economy. Given the importance of these systems, the Board has developed this policy to address the risks that payments and settlement activity present to the financial system and to the Federal Reserve Banks (Reserve Banks).

In adopting this policy, the Board's objectives are to foster the safety and efficiency of payments and settlement systems. These policy objectives are consistent with (1) the Board's long-standing objectives to promote the integrity, efficiency, and accessibility of the payments mechanism; (2) industry and supervisory methods for risk management; and (3) internationally accepted risk management principles and minimum standards for systemically important payments and settlement systems.[1]

Part I of this policy sets out the Board's views, and related principles and minimum standards, regarding the management of risks in payments and settlement systems, including those operated by the Reserve Banks. In setting out its views, the Board seeks to encourage payments and settlement systems, and their primary regulators, to take the principles and minimum standards in this policy into consideration in the design, operation, monitoring, and assessing of these systems. The Board also will be guided by this part, in conjunction with relevant laws and other Federal Reserve policies, when exercising its authority over certain systems or their participants, when providing payment and settlement services to systems, or when providing intraday credit to Federal Reserve account holders.

Part II of this policy governs the provision of intraday or ''daylight'' overdrafts in accounts at the Reserve Banks and sets out the general methods used by the Reserve Banks to control their intraday credit exposures.[2] Under

[1] For the Board's long-standing objectives in the payments system, see ''The Federal Reserve in the Payments System,'' September 2001, FRRS 9–1550, available at *http://www.federalreserve.gov/paymentssystems/pricing/frpaysys.htm.*

[2] To assist depository institutions in implementing this part of the Board's payments system risk policy, the Federal Reserve has

this part, the Board expects depository institutions to manage their Federal Reserve accounts effectively and minimize their use of Federal Reserve daylight credit.[3] Although some intraday credit may be necessary, the Board expects that, as a result of this policy, relatively few institutions will consistently rely on intraday credit supplied by the Federal Reserve to conduct their business.

Through this policy, the Board expects financial system participants, including the Reserve Banks, to reduce and control settlement and systemic risks arising in payments and settlement systems, consistent with the smooth operation of the financial system. This policy is designed to fulfill that aim by (1) making financial system participants and system operators aware of the types of basic risks that arise in the settlement process and the Board's expectations with regard to risk management, (2) setting explicit risk management expectations for systemically important systems, and (3) establishing the policy conditions governing the provision of Federal Reserve intraday credit to account holders. The Board's adoption of this policy in no way diminishes the primary responsibilities of financial system participants generally and settlement system operators, participants, and Federal Reserve account holders more specifically, to address the risks that may arise through their operation of, or participation in, payments and settlement systems.

Risks in Payments and Settlement Systems

The basic risks in payments and settlement systems are credit risk, liquidity risk, operational risk, and legal risk. In the context of this policy, these risks are defined as follows.[4]

Credit Risk. The risk that a counterparty will not settle an obligation for full value either when due, or anytime thereafter.

Liquidity Risk. The risk that a counterparty will not settle an obligation for full value when due.

Operational Risk. The risk of loss resulting from inadequate or failed internal processes, people, and systems, or from external events. This type of risk includes various physical and information security risks.

Legal Risk. The risk of loss because of the unexpected application of a law or regulation or because a contract cannot be enforced.

These risks arise between financial institutions as they settle payments and other financial transactions and must be managed by institutions, both individually and collectively.[5] [6] Multilateral payments and settlement systems, in particular, may increase, shift, concentrate, or otherwise transform risks in unanticipated ways. These systems also may pose systemic risk to the financial system where the inability of a system participant to meet its obligations when due may cause other participants to be unable to meet their obligations when due. The failure of one or more participants to settle their payments or other financial transactions, in turn, could create credit or liquidity problems for other participants, the system operator, or depository institutions. Systemic risk might lead ultimately to a disruption in the financial system more broadly or undermine public confidence in the nation's financial infrastructure.

These risks stem, in part, from the multilateral and time-sensitive credit and liquidity interdependencies among financial institutions. These interdependencies often create complex transaction flows that, in combination with a system's design, can lead to significant demands for intraday credit, either on a regular or extraordinary basis. Some level of intraday credit is appropriate to ensure the smooth functioning of payments and settlement systems. To the extent that financial institutions or the Reserve Banks are the direct or indirect source of such intraday credit, they may face a direct risk of loss if daylight credit is not extinguished as planned. In addition, measures taken by Reserve Banks to limit their intraday credit exposures may shift some or all of the associated risks to private-sector systems.

The smooth functioning of payments and settlement systems is also critical to certain public policy objectives in the areas of monetary policy and banking supervision. The effective implementation of monetary policy, for example, depends on both the orderly settlement of open market operations and the efficient distribution of reserve balances throughout the banking system via the money market and payments system. Likewise, supervisory objectives regarding the safety and soundness of depository institutions must take into account the risks payments and settlement systems pose to depository institutions that participate directly or indirectly in, or provide settlement, custody, or credit services to, such systems.

Part I: Risk Management in Payments and Settlement Systems

This part sets out the Board's views regarding the management of risk in payments and settlement systems, including those operated by the Reserve Banks. The Board will be guided by this part, in conjunction with relevant laws and other Federal Reserve policies, when exercising its authority in (1) supervising state member banks, Edge and agreement corporations, bank holding companies, and clearinghouse arrangements, including the exercise of authority under the Bank Service Company Act, where applicable,[7] (2) setting or reviewing the terms and conditions for the use of Federal Reserve payments and settlement services by system operators and participants, (3) developing and applying policies for the provision of intraday liquidity to Reserve Bank account holders, and (4) interacting with other domestic and foreign

prepared two documents, the ''Overview of the Federal Reserve's Payments System Risk Policy'' and the ''Guide to the Federal Reserve's Payments System Risk Policy,'' which are available online at *http://www.federalreserve.gov/paymentssystems/PSR* or from any Reserve Bank. The ''Overview of the Federal Reserve's Payments System Risk Policy'' summarizes the Board's policy on the provision of daylight credit, including net debit caps and daylight overdraft fees. The overview is intended for use by institutions that incur only small and infrequent daylight overdrafts. The ''Guide to the Federal Reserve's Payments System Risk Policy'' explains in detail how these policies apply to different institutions and includes procedures for completing a self-assessment and filing a cap resolution as well as information on other aspects of the policy.

[3] The term ''depository institution,'' as used in this policy, refers not only to institutions defined as depository institutions'' in 12 U.S.C. 461(b)(1)(A), but also to U.S. branches and agencies of foreign banking organizations, Edge and agreement corporations, trust companies, and bankers' banks, unless the context indicates a different reading.

[4] These definitions of credit risk, liquidity risk, and legal risk are based upon those presented in the Core Principles for Systemically Important Payment Systems (Core Principles) and the Recommendations for Securities Settlement Systems (Recommendations for SSS). The definition of operational risk is based on the Basel Committee on Banking Supervision's ''Sound Practices for the Management and Supervision of Operational Risk,'' available at *http://www.bis.org/pub/bcbs96.htm*. Each of these definitions is largely consistent with those included in the Recommendations for Central Counterparties (Recommendations for CCP).

[5] The term ''financial institution,'' as used in this policy, includes a broad array of types of organizations that engage in financial activity, including depository institutions and securities dealers.

[6] Several existing regulatory and bank supervision guidelines and polices also are directed at institutions' management of the risks posed by interbank payments and settlement activity. For example, Federal Reserve Regulation F (12 CFR 206) directs insured depository institutions to establish policies and procedures to avoid excessive exposures to any other depository institutions, including exposures that may be generated through the clearing and settlement of payments.

financial system authorities on payments and settlement risk management issues. The Board's adoption of this policy is not intended to exert or create new supervisory or regulatory authority over any particular class of institutions or arrangements where the Board does not currently have such authority.

Where the Board does not have exclusive authority over systems covered by this policy, it will work with other domestic and foreign financial system authorities to promote effective risk management in payments and settlement systems, as appropriate. The Board encourages other relevant authorities to consider the principles and minimum standards embodied in this policy when evaluating the risks posed by and to payments and settlement systems and individual system participants that they oversee, supervise, or regulate. In working with other financial system authorities, the Board will be guided, as appropriate, by Responsibility D of the Core Principles, Recommendation 18 of the Recommendations for SSS, Recommendation 15 of the Recommendations for CCP, the ''Principles for Cooperative Central Bank Oversight of Cross-border and Multi-currency Netting and Settlement Schemes,'' and the Principles for International Cooperative Oversight (Part B) of the Committee on Payment and Settlement Systems (CPSS) report, ''Central Bank Oversight of Payment and Settlement Systems.'' [8] The Board believes these international principles provide an appropriate framework for cooperating and coordinating with other authorities to address risks in domestic, cross-border, multi-currency, and, where appropriate, offshore payments and settlement systems.

A. Scope

This policy applies to public- and private-sector payments and settlement systems that expect to settle a daily aggregate gross value of U.S. dollar-denominated transactions exceeding $5 billion on any day during the next 12 months.[9] [10] For purposes of this policy, a payments or settlement system is considered to be a multilateral arrangement (three or more participants) among financial institutions for the purposes of clearing, netting, and/or settling payments, securities, or other financial transactions among themselves or between each of them and a central party, such as a system operator or central counterparty.[11] [12] [13] A system generally embodies one or more of the following characteristics: (1) A set of rules and procedures, common to all participants, that govern the clearing (comparison and/or netting) and settlement of payments, securities, or other financial transactions, (2) a common technical infrastructure for conducting the clearing or settlement process, and (3) a risk management or capital structure where any credit losses are ultimately borne by system participants rather than the system operator, a central counterparty or guarantor, or the system's shareholders.

These systems may be organized, located, or operated within the United States (domestic systems), outside the United States (offshore systems), or both (cross-border systems) and may involve other currencies in addition to the U.S. dollar (multi-currency systems). The policy also applies to any system based or operated in the United States that engages in the settlement of non-U.S. dollar transactions if that system would be otherwise subject to the policy.[14]

This policy does not apply to bilateral relationships between financial institutions and their customers, such as traditional correspondent banking, including traditional government securities clearing services. The Board believes that these relationships do not constitute ''a system'' for purposes of this policy and that relevant safety and soundness issues associated with these relationships are more appropriately addressed through the bank supervisory process.

B. General Policy Expectations

The Board encourages payments and settlement systems within the scope of this policy and expects systems subject to its authority to implement a risk management framework appropriate for the risks the system poses to the system operator, system participants, and other relevant parties as well as the financial

[8] Payments and settlement systems within the scope of this policy may be subject to oversight or supervision by multiple public authorities, as a result of the legal framework or the system's operating structure (e.g., multi-currency or cross-border systems). As such, the Federal Reserve, other central banks, securities regulators, or other financial system authorities may need to find practical ways to cooperate in order to discharge fully their own responsibilities. In some cases, multiple authorities may have responsibility for a multi-currency, cross-border, or other arrangement. In these situations, financial authorities need to be sensitive to the potential for duplicative or conflicting requirements, oversight gaps, or unnecessary costs and burdens imposed on the system. The ''Principles for Cooperative Central Bank Oversight and Multi-currency Netting and Settlement Schemes'' are set out in the ''*Report of the Committee on Interbank Netting Schemes of the Central Banks of the Group of Ten Countries'' (Lamafalussy Minimum Standards).* The CPSS report, ''Central Bank Oversight of Payment and Settlement Systems'' (Oversight Report), Part B, ''Principles for international cooperative oversight,'' provides further information on the practical application of the Lamfalussy Cooperative Oversight Principles. The Lamfalussy Minimum Standards and the Oversight Report are available at *http://www.bis.org/cpss/cpsspub.htm.*

[9] The $5 billion threshold was designed to apply to cash markets and may not be a useful benchmark for central counterparties operating in derivatives markets. The appropriate financial system authorities in derivatives markets may therefore have different benchmarks and standards relevant to such central counterparties.

[10] The 'next' twelve-month period is determined by reference to the date a determination is being made as to whether the policy applies to a particular system. Aggregate gross value of U.S. dollar-denominated transactions refers to the total dollar value of individual U.S. dollar transactions settled in the system which also represents the sum of total U.S. dollar debits (or credits) to all participants prior to or in absence of any netting of transactions.

[11] A system includes all of the governance, management, legal, and operational arrangements used to effect settlement as well as the relevant parties to such arrangements, such as the system operator, system participants, and system owners.

[12] The types of systems that may fall within the scope of this policy include, but are not limited to, large-value funds transfer systems, automated clearinghouse (ACH) systems, check clearinghouses, and credit and debit card settlement systems, as well as central counterparties, clearing corporations, and central securities depositories. For purposes of this policy, the system operator is the entity that manages and oversees the operations of the system.

[13] For the purposes of this policy, a ''settlement system'' includes a payment-versus-payment settlement system for foreign exchange transactions, a securities settlement system, and a system operating as central counterparty. The CPSS defines ''payment-versus-payment'' as ''* * * a foreign exchange settlement system which ensures that a final transfer of one currency occurs if and only if a final transfer of the other currency or currencies takes place.'' The CPSS and the Technical Committee of the International Organization of Securities Commission (IOSCO) define a ''securities settlement system'' as the full set of institutional arrangements for confirmation, clearance, and settlement of securities trades and safekeeping of securities and a ''central counterparty'' is an entity that interposes itself between counterparties to contracts traded in one or more financial markets, becoming the buyer to every seller and the seller to every buyer. A central counterparty can include a derivatives clearing organization, such as a clearinghouse, clearing association, clearing corporation, or similar entity, facility, system, or organization that, with respect to an agreement, contract, or transaction, acts as a central counterparty to each party to an agreement, contract, or transaction; arranges or provides for multilateral netting; or provide clearing services or arrangements that mutualize or transfer credit risk among participants in the organization.

[9] The $5 billion threshold was designed to apply to cash markets and may not be a useful benchmark for central counterparties operating in derivatives markets. The appropriate financial system authorities in derivatives markets may therefore have different benchmarks and standards relevant to such central counterparties.

[10] The 'next' twelve-month period is determined by reference to the date a determination is being made as to whether the policy applies to a particular system. Aggregate gross value of U.S. dollar-denominated transactions refers to the total dollar value of individual U.S. dollar transactions settled in the system which also represents the sum of total U.S. dollar debits (or credits) to all participants prior to or in absence of any netting of transactions.

system more broadly. A risk management framework is the set of objectives, policies, arrangements, procedures, and resources that a system employs to limit and manage risk. While there are a number of ways to structure a sound risk management framework, all frameworks should

- Clearly identify risks and set sound risk management objectives;
- Establish sound governance arrangements;
- Establish clear and appropriate rules and procedures; and,
- Employ the resources necessary to achieve the system's risk management objectives and implement effectively its rules and procedures.

In addition to establishing a risk management framework that includes these key elements, the Board expects systems subject to its authority that it determines are systemically important to meet the policy expectations set out in Section C (Core Principles, Recommendations for SSS, or Recommendations for CCP, as applicable).

Identify Risks and Set Sound Risk Management Objectives. The first element of a sound risk management framework is the clear identification of all risks that have the potential to arise in or result from the system's settlement process and the development of clear and transparent objectives regarding the system's tolerance for and management of such risks.

System operators should identify the forms of risk present in their system's settlement process as well as the parties posing and bearing each risk. In particular, system operators should identify the risks posed to and borne by themselves, the system participants, and other key parties such as a system's settlement banks, custody banks, and third-party service providers. System operators should also analyze whether risks might be imposed on other external parties and the financial system more broadly.

In addition, system operators should analyze how risk is transformed or concentrated by the settlement process. System operators should also consider the possibility that attempts to limit one type of risk could lead to an increase in another type of risk. Moreover, system operators should be aware of risks that might be unique to certain instruments, participants, or market practices. System operators should also analyze how risks are correlated among instruments or participants.[15]

Based upon its clear identification of risks, a system should establish its risk tolerance, including the levels of risk exposure that are acceptable to the system operator, system participants, and other relevant parties. The system operator should then set risk management objectives that clearly allocate acceptable risks among the relevant parties and set out strategies to manage this risk. Risk management objectives should be consistent with the objectives of this policy, the system's business purposes, and the type of instruments and markets for which the system clears and settles. Risk management objectives should also be communicated to and understood by both the system operator's staff and system participants.

System operators should reevaluate their risks in conjunction with any major changes in the settlement process or operations, the instruments or transactions settled, a system's rules or procedures, or the relevant legal and market environments. Systems should revisit their risk management objectives regularly to ensure that they are appropriate for the risks posed by the system, continue to be aligned with the system's purposes, remain consistent with this policy, and are being effectively adhered to by the system operator and participants.

Sound Governance Arrangements. Systems should have sound governance arrangements to implement and oversee their risk management frameworks. The responsibility for sound governance rests with a system operator's board of directors or similar body and with the system operator's senior management. Governance structures and processes should be transparent; enable the establishment of clear risk management objectives; set and enforce clear lines of responsibility and accountability for achieving these objectives; ensure that there is appropriate oversight of the risk management process; and enable the effective use of information reported by the system operator's management, internal auditors, and external auditors to monitor the performance of the risk management process.[16] Individuals responsible for governance should be qualified for their positions, understand their responsibilities, and understand their system's risk management framework. Governance arrangements should also ensure that risk management information is shared in forms, and at times, that allow individuals responsible for governance to fulfill their duties effectively.

Clear and Appropriate Rules and Procedures. Systems should implement rules and procedures that are appropriate and sufficient to carry out the system's risk management objectives and that have a well-founded legal basis. Such rules and procedures should specify the respective responsibilities of the system operator, system participants, and other relevant parties. Rules and procedures should establish the key features of a system's settlement and risk management design and specify clear and transparent crisis management procedures and settlement failure procedures, if applicable.[17]

Employ Necessary Resources. Systems should ensure that the appropriate resources and processes are in place to allow them to achieve their risk management objectives and effectively implement their rules and procedures. In particular, the system operator's staff should have the appropriate skills,

[11] A system includes all of the governance, management, legal, and operational arrangements used to effect settlement as well as the relevant parties to such arrangements, such as the system operator, system participants, and system owners.

[12] The types of systems that may fall within the scope of this policy include, but are not limited to, large-value funds transfer systems, automated clearinghouse (ACH) systems, check clearinghouses, and credit and debit card settlement systems, as well as central counterparties, clearing corporations, and central securities depositories. For purposes of this policy, the system operator is the entity that manages and oversees the operations of the system.

[13] For the purposes of this policy, a ''settlement system'' includes a payment-versus-payment settlement system for foreign exchange transactions, a securities settlement system, and a system operating as central counterparty. The CPSS defines ''payment-versus-payment'' as ''* * * a foreign exchange settlement system which ensures that a final transfer of one currency occurs if and only if a final transfer of the other currency or currencies takes place.'' The CPSS and the Technical Committee of the International Organization of Securities Commission (IOSCO) define a ''securities settlement system'' as the full set of institutional arrangements for confirmation, clearance, and settlement of securities trades and safekeeping of securities and a ''central counterparty'' is an entity that interposes itself between counterparties to contracts traded in one or more financial markets, becoming the buyer to every seller and the seller to every buyer. A central counterparty can include a derivatives clearing organization, such as a clearinghouse, clearing association, clearing corporation, or similar entity, facility, system, or organization that, with respect to an agreement, contract, or transaction, acts as a central counterparty to each party to an agreement, contract, or transaction; arranges or provides for multilateral netting; or provide clearing services or arrangements that mutualize or transfer credit risk among participants in the organization.

[16] The risk management and internal audit functions should also be independent of those responsible for day-do-day functions.

[17] Examples of key features that might be specified in a system's rules and procedures are controls to limit participant-based risks, such as membership criteria based on participant's financial and operational health, limits on settlement exposures, and the procedures and resources to hedge, margin, or collateralize settlement exposures. Other examples of key features might be business continuity requirements and loss allocation procedures.

information, and tools to apply the system's rules and procedures and achieve the system's risk management objectives. System operators should also ensure that their facilities and contingency arrangements, including any information system resources, are sufficient to meet their risk management objectives.

The Board recognizes that payments and settlement systems differ widely in terms of form, function, scale, and scope of activities and that these characteristics result in differing combinations and levels of risks. Thus, the exact features of a system's risk management framework should be tailored to the risks of that system. The Board also recognizes that the specific features of a risk management framework may entail trade-offs between efficiency and risk reduction and that payments and settlement systems will need to consider these trade-offs when designing appropriate rules and procedures. In considering such trade-offs, however, it is critically important that systems take into account the costs and risks that may be imposed on all relevant parties, including parties with no direct role in the system. Furthermore, in light of rapidly evolving technologies and risk management practices, the Board encourages all systems to consider periodically making cost-effective risk-management improvements.

To determine whether a system's current or proposed risk management framework is consistent with this policy, the Board will seek to understand how a system achieves the four elements of a sound risk management framework set out above. In this context, it may be necessary for the Board to obtain information from system operators regarding their risk management framework, risk management objectives, rules and procedures, significant legal analyses, general risk analyses, analyses of the credit and liquidity effects of settlement disruptions, business continuity plans, crisis management procedures, and other relevant documentation.[18] It may also be necessary for the Board to obtain data or statistics on system activity on an ad-hoc or ongoing basis. All information provided to the Federal Reserve for the purposes of this policy will be handled in accordance with all applicable Federal Reserve policies on information security, confidentiality, and conflicts of interest.

C. Systemically Important Systems

Financial stability depends, in part, on a robust and well-managed financial infrastructure. If risks are not effectively managed by systemically important systems, these systems have the potential to be a major channel for the transmission of financial shocks across systems and markets. Financial system authorities, including central banks, have promoted sound risk management practices by developing internationally accepted guidelines to encourage the safe design and operation of payments and settlement systems, especially those considered systemically important.

In particular, the Core Principles, Recommendations for SSS, and Recommendations for CCP (the latter two collectively referred to as the CPSS–IOSCO Recommendations) set forth risk management practices for payments systems, securities settlement systems, and central counterparties, respectively.[19] thnsp;[20] The Federal Reserve collaborated with participating financial system authorities in developing these principles and minimum standards. In addition, the Securities and Exchange Commission and Commodity Futures Trading Commission participated in the development of the CPSS–IOSCO Recommendations. The principles and minimum standards reflect broad input and provide a balanced view of acceptable risk management practices. The Core Principles and Recommendations for SSS are also part of the Financial Stability Forum's Compendium of Standards that have been widely recognized, supported, and endorsed by U.S. authorities as integral to strengthening the stability of the financial system. The Board believes that the implementation of the individual principles and minimum standards by systemically important systems can help promote safety and efficiency in the financial system and foster greater financial stability in domestic and global economies.

Systemically important systems that are subject to the Board's authority are expected to meet the specific risk management principles and minimum standards in this section, as appropriate, and the general expectations of Section B because of their potential to cause major disruptions in the financial system.[21] To determine whether a system is systemically important for purposes of this policy, the Board may consider, but will not be limited to, one or more of the following factors:[22]

- Whether the system has the potential to create significant liquidity disruptions or dislocations should it fail to perform or settle as expected;
- Whether the system has the potential to create large credit or liquidity exposures relative to participants' financial capacity;
- Whether the system settles a high proportion of large-value or interbank transactions;
- Whether the system settles transactions for important financial markets;[23]
- Whether the system provides settlement for other systems; and,
- Whether the system is the only system or one of a very few systems for settlement of a given financial instrument.

Some systemically important systems, however, may present an especially high degree of systemic risk, by virtue

[18] To facilitate analysis of settlement disruptions, systems may need to develop the capability to simulate credit and liquidity effects on participants and on the system resulting from one or more participant defaults, or other possible sources of settlement disruptions. Such simulations may need to include, if appropriate, the effects of changes in market prices, volatilities, or other factors.

[19] The Core Principles were developed by the CPSS; reference to ''principles'' in this policy are to the Core Principles. The Core Principles draw exclusively on the previous work of the CPSS, most importantly the Lamfalussy Minimum Standards. The Core Principles extend the Lamfalussy Minimum Standards by adding several principles and broadening the coverage to include systematically important payments systems for all types, including gross settlement systems, net settlement systems, and hybrid systems, operated by either the public or private sector. The Core Principles also address the responsibilities of central banks in applying the Core Principles.

[20] The CPSS and IOSCO developed the CPSS–IOSCO Recommendations as ''minimum standards'' and are referred to as such in this policy. The full reports on the Core Principles and the CPSS–IOSCO Recommendations are available at *http://www.bis.org/pucl/cpss43.htm*, *http://www.bis.org/pucl/cpss46.htm*, and *http://www.bis.org/publ/cpss64.htm*.

[21] Systematically important payments systems are expected to meet the principles listed in Section C.1. Securities settlement systems of systemic importance are expected to meet the minimum standards listed in Section C.2.a., and systematically important central counterparties are expected to meet the minimum standards listed in C.2.b. For a system not subject to its authority, the Board encourages the system and its appropriate financial system authority to consider these principles and minimum standards when designing, operating, monitoring, and assessing the system, as appropriate and applicable.

[22] The Board will inform a system subject to its authority if it considers it systemically important and therefore expected to meet the principles or minimum standards in this policy. The Board will also inform such system if they are expected to exceed any of the principles or minimum standards. The appropriate financial system authorities responsible for supervising or regulating central counterparties are encouraged to inform the central counterparties as to whether they are expected to meet the Recommendations for CCP.

[23] Important financial markets include, but are not limited to, critical markets as defined in the ''Interagency Paper on Sound Practices to Strengthen the Resilience of the U.S. Financial System'' as the markets for federal funds, foreign exchange, and commercial paper; U.S. government and agency securities; and corporate debt and security securities. See 68 FR 17809, April 11, 2003.

of their high volume of large-value transactions or central role in the financial markets. Because all systems are expected to employ a risk management framework that is appropriate for their risks, the Board may expect these systems to exceed the principles and minimum standards set out below. Finally, the Board expects systemically important systems to demonstrate the extent to which they meet the applicable principles or minimum standards by completing self-assessments and disclosing publicly the results of their analyses in a manner consistent with the guidelines set forth in Section C.3.

1. Principles for Systemically Important Payments Systems

1. The system should have a well-founded legal basis under all relevant jurisdictions.

2. The system's rules and procedures should enable participants to have a clear understanding of the system's impact on each of the financial risks they incur through participation in it.

3. The system should have clearly defined procedures for the management of credit risks and liquidity risks, which specify the respective responsibilities of the system operator and the participants and which provide appropriate incentives to manage and contain those risks.

4. The system should provide prompt final settlement on the day of value, preferably during the day and at a minimum at the end of the day.

5. A system in which multilateral netting takes place should, at a minimum, be capable of ensuring the timely completion of daily settlements in the event of an inability to settle by the participant with the largest single settlement obligation.

6. Assets used for settlement should preferably be a claim on the central bank; where other assets are used, they should carry little or no credit risk and little or no liquidity risk.

7. The system should ensure a high degree of security and operational reliability and should have contingency arrangements for timely completion of daily processing.

8. The system should provide a means of making payments which is practical for its users and efficient for the economy.

9. The system should have objective and publicly disclosed criteria for participation, which permit fair and open access.

10. The system's governance arrangements should be effective, accountable and transparent.

2. Minimum Standards for Systemically Important Securities Settlement Systems and Central Counterparties

The CPSS–IOSCO Recommendations apply to the full set of institutional arrangements for confirmation, clearance, and settlement of securities transactions, including those related to market convention and pre-settlement activities. As such, not all of these standards apply to all systems. Moreover, the standards applicable to a particular system also will vary based on the structure of the market and the system's design.

While the Board endorses the CPSS–IOSCO Recommendations in their entirety, its primary interest for purposes of this policy is in those recommendations related to the settlement aspects of financial transactions, including the delivery of securities or other financial instruments against payment, and related risks. The Board expects that systems engaged in the management or conduct of clearing and settling financial transactions to meet the expectations set forth in the applicable set of CPSS–IOSCO Recommendations.

a. Recommendations for Securities Settlement Systems

1. Securities settlement systems should have a well-founded, clear, and transparent legal basis in the relevant jurisdictions.

2. Confirmation of trades between direct market participants should occur as soon as possible after the trade execution, but no later than the trade date (T+0). Where confirmation of trades by indirect market participants (such as institutional investors) is required, it should occur as soon as possible after the trade execution, preferably on T+0, but no later than T+1.

3. Rolling settlement should be adopted in all securities markets. Final settlement should occur no later than T+3. The benefits and costs of a settlement cycle shorter than T+3 should be evaluated.

4. The benefits and costs of a central counterparty should be evaluated. Where such a mechanism is introduced, the central counterparty should rigorously control the risks it assumes.

5. Securities lending and borrowing (or repurchase agreements and other economically equivalent transactions) should be encouraged as a method for expediting the settlement of securities transactions. Barriers that inhibit the practice of lending securities for this purpose should be removed.

6. Securities should be immobilized or dematerialized and transferred by book entry in central securities depository to the greatest extent possible.

7. Central securities depositories should eliminate principal risk linking securities transfers to funds transfers in a way that achieves delivery versus payment.

8. Final settlement should occur no later than the end of the settlement day. Intraday or real time finality should be provided where necessary to reduce risks.

9. Central securities depositories that extend intraday credit to participants, including central securities depositories that operate net settlement systems, should institute risk controls that, at a minimum, ensure timely settlement in the event that the participant with the largest payment obligation is unable to settle. The most reliable set of controls is a combination of collateral requirements and limits.

10. Assets used to settle the ultimate payment obligations arising from securities transaction should carry little or no credit or liquidity risk. If central bank money is not used, steps must be taken to protect central securities depository members from potential losses and liquidity pressures arising from the failure of the cash settlement agent whose assets are used for that purpose.

11. Sources of operational risk arising in the clearing and settlement process should be identified and minimized through the development of appropriate systems, controls and procedures. Systems should be reliable and secure, and have adequate, scalable capacity. Contingency plans and backup facilities should be established to allow for the timely recovery of operations and completion of the settlement process.

12. Entities holding securities in custody should employ accounting practices and safekeeping procedures that fully protect customers' securities. It is essential that customers' securities be protected against the claims of a custodian's creditors.

13. Governance arrangements for central securities depositories and central counterparties should be designed to fulfill public interest requirement and to promote the objectives of owners and users.

14. Central securities depositories and central counterparties should have objective and publicly disclosed criteria for participation that permit fair and open access.

15. While maintaining safe and secure operations, securities settlement systems should be cost-effective in meeting the requirements of users.

16. Securities settlement systems should use or accommodate the relevant international communication procedures and standards in order to facilitate efficient settlement of cross-border transactions.

17. Central securities depositories and central counterparties should provide market participants with sufficient information for them to identify and evaluate accurately the risks and costs associated with using the central securities depository or central counterparty services.

18. Securities settlement systems should be subject to transparent and effective regulation and oversight. Central banks and securities regulators should cooperate with each other and with other relevant authorities.

19. Central securities depositories that establish links to settle cross-border trades should design and operate such links to reduce effectively the risks associated with cross-border settlement.

b. Recommendations for Central Counterparties

1. A central counterparty should have a well founded, transparent, and enforceable legal framework for each aspect of its activities in all relevant jurisdictions.

2. A central counterparty should require participants to have sufficient financial resources and robust operational capacity to meet obligations arising from participation in the central counterparty. A central counterparty should have procedures in place to monitor that participation requirements are met on an ongoing basis. A central counterparty's participation requirements should be objective, publicly disclosed, and permit fair and open access.

3. A central counterparty should measure its credit exposures to its participants at least once a day. Through margin requirements, other risk control mechanisms, or a combination of both, a central counterparty should limit its exposures to potential losses from defaults by its participants in normal market conditions so that the operations of the central counterparty would not be disrupted and non-defaulting participants would not be exposed to losses that they cannot anticipate or control.

4. If a central counterparty relies on margin requirements to limit its credit exposures to participants, those requirements should be sufficient to cover potential exposures in normal market conditions. The models and parameters used in setting margin requirements should be risk-based and reviewed regularly.

5. A central counterparty should maintain sufficient financial resources to withstand, at a minimum, a default by the participant to which it has the largest exposure in extreme but plausible market conditions.

6. A central counterparty's default procedures should be clearly stated, and they should ensure that the central counterparty can take timely action to contain losses and liquidity pressures and to continue meeting its obligations. Key aspects of the default procedures should be publicly available.

7. A central counterparty should hold assets in a manner whereby risk of loss or of delay in its access to them is minimized. Assets invested by a central counterparty should be held in instruments with minimal credit, market, and liquidity risks.

8. A central counterparty should identify sources of operational risk and minimize them through the development of appropriate systems, controls, and procedures. Systems should be reliable and secure, and have adequate, scalable capacity. Business continuity plans should allow for timely recovery of operations and fulfillment of a central counterparty's obligations.

9. A central counterparty should employ money settlement arrangements that eliminate or strictly limit its settlement bank risks, that is, its credit and liquidity risks from the use of banks to effect money settlements with its participants. Funds transfers to a central counterparty should be final when effected.

10. A central counterparty should clearly state its obligations with respect to physical deliveries. The risks from these obligations should be identified and managed.

11. Central counterparties that establish links either cross-border or domestically to clear trades should evaluate the potential sources of risks that can arise, and ensure that the risks are managed prudently on an ongoing basis. There should be a framework for cooperation and coordination between the relevant regulators and overseers.

12. While maintaining safe and secure operations, central counterparties should be cost-effective in meeting the requirements of participants.

13. Governance arrangements for a central counterparty should be clear and transparent to fulfill public interest requirements and to support the objectives of owners and participants. In particular, they should promote the effectiveness of a central counterparty's risk management procedures.

14. A central counterparty should provide market participants with sufficient information for them to identify and evaluate accurately the risks and costs associated with using its services.

15. A central counterparty should be subject to transparent and effective regulation and oversight. In both a domestic and an international context, central banks and securities regulators should cooperate with each other and with other relevant authorities.

3. Self-Assessments by Systemically Important Systems

The Board believes that the implementation of these principles and minimum standards by systemically important systems can foster greater financial stability in payments and settlement systems. Users and others commonly are interested in understanding how these systems function in order to manage their risks. At this time, different disclosure practices and requirements for payments and settlement systems have resulted in varying levels of information being disseminated to users and others. Users and others outside the user community (such as prospective users or other public authorities) may find it difficult to obtain access to sufficient information to understand and assess a particular system's approach to risk management against internationally accepted principles and minimum standards. Broadening the availability of information concerning a system's risk management controls, governance, and legal framework, for example, can assist those interested in a system in evaluating and managing their risk exposures. The Board believes that operators of systemically important systems are well positioned to assess and demonstrate the extent to which they have implemented the principles or minimum standards in this policy. Therefore, in furtherance of its policy objectives, the Board expects systemically important systems subject to its authority to complete comprehensive, objective self-assessments against the applicable principles or minimum standards in this policy and disclose publicly the results of these efforts. Adopting this self-assessment framework, however, does not preclude the Federal Reserve from independently assessing compliance of systemically important systems with relevant rules, regulations, and Federal Reserve policies.

The Board expects systemically important systems subject to its authority to complete self-assessments based on the following guidelines. First, systemically important systems are expected to document the basis for their self-assessment and support any

conclusions regarding the extent to which they meet a particular principle or minimum standard.[24] The Board notes that the CPSS and CPSS–IOSCO have developed implementation measures and assessment methodologies that can assist system operators in structuring their self-assessments.[25] Accordingly, payment system operators are encouraged to consult Section 7 of the Core Principles for guidance when developing their self-assessments and in measuring the extent to which the system meets each principle. Likewise system operators for securities settlement systems and central counterparties are encouraged to consult the assessment methodology for the relevant minimum standards for further guidance on each minimum standard and are encouraged to respond to the key questions included therein.[26] A system may consult the Board for assistance with respect to the principles and minimum standards and the completion of its assessment. Second, to further ensure system accountability for accuracy and completeness, the Board expects the system's senior management and board of directors to review and approve self-assessments upon completion. Third, to achieve broad disclosure, the system is expected to make its self-assessments readily available to the public, such as by posting the self-assessment on the system's public Web site. Finally, in order for self-assessments to reflect correctly the system's current rules, procedures, and operations, the Board expects a systemically important system to update the relevant parts of the self-assessment following material changes to the system or its environment. At a minimum, a systemically important system would be expected to review its self-assessment annually to ensure continued accuracy.

As part of its ongoing oversight of systemically important payments and settlement systems, the Federal Reserve will review published self-assessments by systems subject to the Board's authority to ensure the Board's policy objectives and expectations are being met.[27] Where necessary, the Federal Reserve will provide feedback to these systems regarding the content of their self-assessments and their effectiveness in achieving the policy objectives discussed above.[28] The Board acknowledges that payments and settlement systems vary in terms of the scope of instruments they settle and markets they serve. It also recognizes that systems may operate under different legal and regulatory constraints and within particular market infrastructures or institutional frameworks. The Board will consider these factors when reviewing self-assessments and in evaluating how a systemically important system addresses a particular principle or minimum standard and complies with the policy generally. Where the Board does not have exclusive authority over a systemically important system, it will encourage appropriate domestic or foreign financial system authorities to promote self-assessments by systemically important systems as a means to achieve greater safety and efficiency in the financial system.

By order of the Board of Governors of the Federal Reserve System, June 22, 2006.

Jennifer J. Johnson,

Secretary of the Board.

[FR Doc. 06–5843 Filed 6–27–06; 8:45 am]

BILLING CODE 6210–01–P

[24] System operators should use one of the following assessment categories to describe the extent to which the system meets a particular principle or minimum standard: Observed, broadly observed, partly observed, or non-observed. The assessment should contain information robust enough to enable users and other interested persons to assess the risks associated with the system. The Board, however, does not expect payments and settlement systems to disclose publicly sensitive information that would expose system vulnerabilities or otherwise put the system at risk (e.g., specific business continuity plans).

[25] The Core Principles include an implementation summary for each principle. The CPSS, however, has not developed an assessment methodology for the Core Principles. In November 2002, CPSS–IOSCO published an Assessment Methodology for the Recommendations for SSS available at *http://www.bis.org/publ/cpss51.htm.* In November 2004, CPSS–IOSCO published the CCP Recommendations and an Assessment Methodology available at *http://www.bis.org/publ/cpss64.htm.*

[26] The assessment methodologies for the CPSS–IOSCO Recommendations include key questions to assist an assessor in determining to what extent a system meets a particular minimum standard.

[27] Any review of an assessment by the Federal Reserve should not be viewed as an approval or guaranty of the accuracy of a system's self-assessment.

[28] If the Federal Reserve materially disagrees with the content of a system's self-assessment, it will communicate its concerns to the system's senior management and possibly to its board of directors, as appropriate. The Federal Reserve may also discuss its concerns with other relevant financial system authorities, as appropriate.

DEPARTMENT OF HEALTH AND HUMAN SERVICES

Centers for Disease Control and Prevention

Public Notice

AGENCY: Centers for Disease Control and Prevention (CDC), Health and Human Services (HHS).

ACTION: Notice.

SUMMARY: The Centers for Disease Control and Prevention (CDC), Coordinating Center for Infectious Disease (CCID), through its component Centers and Divisions has lead technical responsibility for a number of Category A, B and C bioterrorism agents and their associated toxins (Bacillus anthracis, Clostridium botulinum, Brucella sps., Burkholderia sps., Staphylococcus entertoxin B, other food- or waterborne bacterial pathogens, and other bacterial agents). CCID uses epidemiologic, laboratory, clinical, and biostatistical sciences to control and prevent bacterial and mycotic infectious disease. The Centers also conduct applied research in a variety of settings, and translate the findings of this research into public health practice.

The purpose of this announcement is to make interested parties aware that CCID is currently engaged in a research activity to establish and evaluate an intravenous infusion rabbit model for delivery of therapeutic molecules for the treatment of inhalation anthrax. The activity is in the early stage of feasibility assessment. The protocols for these studies may be made available to interested parties upon request. The short term objective of making these protocols available is to promote standardization of the approach to in vivo model development for anthrax therapy evaluation to meet the Nation's bioterrorism defense needs. The longer term objective is to develop these or subsequent protocols into standardized in vivo models that may meet the Food and Drug Administration (FDA) acceptance criteria for product development and licensure.

Interested organizations may request an electronic copy of the protocols by contacting CDC at the address below. To ensure a response, requests must be submitted within thirty days of publication of this notice.

Responses are preferred in electronic format and can be e-mailed to the attention of Dr. Conrad Quinn at *CQUINN@CDC.GOV.* Mailed responses can be sent to the following address: Dr. Conrad Quinn, Division of Bacterial Diseases, Coordinating Center for Infectious Diseases, Centers for Disease Control and Prevention, 1600 Clifton Rd., NE., Mail Stop C–09, Atlanta, GA 30333.

FOR FURTHER INFORMATION CONTACT:

Technical: Dr. Conrad Quinn, Division of Bacterial and Mycotic Diseases, National Center for Infectious Diseases, Centers for Disease Control and Prevention (CDC), 1600 Clifton Rd., NE., Mail Stop D–11, Atlanta, GA 30333. Telephone (404) 639–2858, e-mail at *CQUINN@CDC.GOV.*

Business: Dr. Conrad Quinn, Division of Bacterial and Mycotic Diseases, National Center for Infectious Diseases, Centers for Disease Control and Prevention (CDC), 1600 Clifton R., NE., Mail Stop E–51, Atlanta, GA 30333. Telephone (404) 639–2858, e-mail at *CQUINN@CDC.GOV.*

Dated: June 20, 2006.

James D. Seligman,

Chief Information Officer, Centers for Disease Control and Prevention.

[FR Doc. E6–10173 Filed 6–27–06; 8:45 am]

BILLING CODE 4163–18–P

DEPARTMENT OF HEALTH AND HUMAN SERVICES

Centers for Disease Control and Prevention

Fees for Sanitation Inspections of Cruise Ships

AGENCY: Centers for Disease Control and Prevention (CDC), Department of Health and Human Services (HHS).

ACTION: Request for public comment on proposed modification of fee structure for vessel sanitation inspections beginning fiscal year 2007.

SUMMARY: CDC began charging fees to conduct sanitation inspections of cruise vessels in 1988. The purpose of these charges is to recover full costs of operating the Vessel Sanitation Program. CDC is requesting comments to the modified fee schedule; the modified fee schedule includes an additional vessel size, the ''mega-sized'' vessel, for any vessel that is greater than 120,000 Gross Registered Tons (GRT). A modified fee schedule would go into effect in the beginning of the next fiscal year, October 2007.

DATE: Submit all comments on or before August 1, 2006.

ADDRESSES: Send comments to: David L. Forney, Chief, Vessel Sanitation Program, National Center for Environmental Health/VSP, Centers for Disease Control, 4770 Buford Highway, NE., Mailstop F–23, Atlanta, Georgia 30341–3724; Telephone: (770) 488–7333; E-mail: *Dforney@cdc.gov.*

SUPPLEMENTARY INFORMATION:

Purpose

The purpose of revising the fee schedule is to cover increasing operational costs of the Vessel Sanitation Program. Because of the significant increase in complexity and size, mega-category vessels will require more inspectors in order to conduct a comprehensive sanitation inspection within the timeframe that a vessel is in port. Currently, the extra large category (*i.e.* all ships greater than 60,000 GRT) is the largest vessel category in the fee schedule. When the schedule was created in 1988, no vessels larger than 60,000 GRT existed. VSP is proposing the revised fee schedule to accommodate the current trends in vessel size and complexity.

Proposed Modifications to the Fee Schedule

The proposed modification to the fee schedule adds a mega-category ship which includes any vessel greater than 120,000 GRT. In 2007, approximately eight ships will meet this criterion.

Formula for the Fee Schedule

The formula used to determine the fees is as follows:

$$1.\ \frac{\text{total cost of VSP}}{\text{weighted number of annual inspections}} = \text{average cost per inspection}$$

2. Average cost per inspection x Approximate cost ($US) Per GRT = per-ship inspection cost.

To get the per-ship inspection cost:

1. Divide the total operating cost of VSP by estimated number of inspections to get the average cost per inspection and then;

2. Multiply the average inspection cost by a factor based on the ship size/cost factor to arrive at an approximate per-ship inspection cost.

The size/cost factor was established in the proposed fee schedule published in the **Federal Register** on July 17, 1987 (52 FR 27060), and revised in a schedule published in the **Federal Register** on November 28, 1989 (54 FR 48942). The proposed revised size/cost factor is presented in Appendix A.

Background

The CDC conducts sanitation inspections of passenger cruise ships under 42 CFR 71.41.

The fee schedule for sanitation inspections of passenger cruise ships inspected under the Vessel Sanitation Program (VSP) was first published in the **Federal Register** on November 24, 1987 (52 FR 45019), and CDC began collecting fees on March 1, 1988. The fee structure covers the operating cost of the VSP which includes salaries, benefits, travel and per diem, supplies, contract services, printing, shipping, average equipment and instrument requirements, and appropriate support costs.

Applicability

The fees will apply to all passengers cruise vessels for which inspections are conducted as part of CDC's VSP.

Dated: June 20, 2006.

James D. Seligman,

Chief Information Officer, Centers for Disease Control and Prevention (CDC).

Appendix A

SIZE/COST FACTOR

Vessel size	GRT [1]	Approximate cost ($US) per GRT
Extra Small ...	< 3,001	0.25
Small	3,001–15,000	0.50
Medium ...	15,001–30,000	1.00
Large	30,001–60,000	1.50
Extra Large ...	60,000–120,000	2.00
Mega*	>120,001	2.50

*New Vessel Size Category.

[1] Gross register tonnage in cubic feet, as shown in Lloyd's Register of Shipping.

EXAMPLE FEE SCHEDULE

[Based on fiscal year 2006 Fees]

Vessel size	GRT [1]	Fee ($U.S.)
Extra Small ...	< 3,000	1,300
Small	3,001–15,000	2,600
Medium ...	15,001–30,000	5,200
Large	30,001–60,000	7,800
Extra Large ...	60,001–120,000	10,400
Mega*	>120,001	15,600

*New Vessel Size Category.

[1] Gross register tonnage in cubic feet, as shown in Lloyd's Register of Shipping.

Inspections and reinspections involve the same procedure, require the same amount of time, and are therefore charged at the same rate.

[FR Doc. E6–10174 Filed 6–27–06; 8:45 am]

BILLING CODE 4163–18–P

DEPARTMENT OF HEALTH AND HUMAN SERVICES

Food and Drug Administration

Blood Products Advisory Committee; Notice of Meeting

AGENCY: Food and Drug Administration, HHS.

ACTION: Notice.

This notice announces a forthcoming meeting of a public advisory committee of the Food and Drug Administration (FDA). At least one portion of the meeting will be closed to the public.

Name of Committee: Blood Products Advisory Committee.

General Function of the Committee: To provide advice and recommendations to the agency on FDA's regulatory issues.

Date and Time: The meeting will be held on July 13, 2006, from 8 a.m. to 4:30 p.m. and on July 14, 2006, from 8 a.m. to 3:30 p.m.

Location: Hilton Hotel, Washington DC North/Gaithersburg, 620 Perry Pkwy, Gaithersburg, MD 20877.

Contact Person: Donald W. Jehn, or Pearline K. Muckelvene, Center for Biologics Evaluation and Research (CBER), Food and Drug Administration, 1401 Rockville Pike, Rockville, MD 20852, 301–827–0314, or FDA Advisory Committee Information Line, 1–800–741–8138 (301–443–0572 in the Washington, DC area), code 3014519516. Please call the Information Line for up-to-date information on this meeting.

Agenda: On July 13, 2006, the Committee will hear updates on the following topics: (1) Summary of the Department of Health and Human Services Advisory Committee on Blood Safety and Availability meeting held on May 9 and 10, 2006; (2) summary of workshop on testing for malarial infections in blood donors to be held on July 12, 2006; (3) Committee report on the office of blood research and review site visit, review of intramural research; (4) west nile virus update and (5) FDA acceptance criteria for *in vivo* red blood cell survival studies. The Committee will discuss the FDA review of Nabi Biopharmaceuticals' Hepatitis B Immunoglobulin Intravenous (IGIV) for prevention of recurrent Hepatitis B Virus (HBV) disease after orthotopic liver transplantation. In the afternoon the Committee will hear an overview of the research program of the Laboratory of Bacterial, Parasitic and Unconventional Agents, Division of Emerging and Transfusion Transmitted Diseases, OBRR, CBER. On July 14, 2006, from 8 a.m. to 3:30 p.m. the meeting will be closed to permit discussion and review of trade secret and/or confidential information (5 U.S.C. 552b(c)(4)).

Procedure: On July 13, 2006, from 8 a.m. to 3:30 p.m., the meeting is open to the public. Interested persons may present data, information, or views, orally or in writing, on issues pending before the committee. Written submissions may be made to the contact person on or before July 5, 2006. Oral presentations from the public will be scheduled between approximately 11 a.m. to 11:30 a.m. and 3 p.m. to 3:30 p.m. on July 13, 2006. Time allotted for each presentation may be limited. Those desiring to make formal oral presentations should notify the contact person and submit a brief statement of the general nature of the evidence or arguments they wish to present, the names and addresses of proposed participants, and an indication of the approximate time requested to make their presentation on or before July 5, 2006.

Closed Committee Deliberations: On July 13, 2006, between 3:30 p.m. and 4:30 p.m. the meeting will be closed to permit discussion of information of a personal nature where disclosure would constitute a clearly unwarranted invasion of personal privacy (5 U.S.C. 552b(c) (6)). The Committee will discuss a review of the individual research programs. On July 14, 2006, the meeting will be closed to permit discussion and review of trade secret and/or confidential information (5 U.S.C. 552b(c) (4)). This portion of the meeting will be closed to permit discussion of this material.

Persons attending FDA's advisory committee meetings are advised that the agency is not responsible for providing access to electrical outlets.

FDA welcomes the attendance of the public at its advisory committee meetings and will make every effort to accommodate persons with physical disabilities or special needs. If you require special accommodations due to a disability, please contact Donald W. Jehn or Pearline K. Muckelvene at least 7 days in advance of the meeting.

Notice of this meeting is given under the Federal Advisory Committee Act (5 U.S.C. app. 2).

Dated: June 20, 2006.

Randall W. Lutter,

Associate Commissioner for Policy and Planning.

[FR Doc. 06–5870 Filed 6–27–06; 8:45 am]

BILLING CODE 4160–01–S

DEPARTMENT OF HEALTH AND HUMAN SERVICES

Food and Drug Administration

[Docket No. 2006D–0254]

Draft Guidance for Industry: Analytical Methods Description for Type C Medicated Feeds; Availability

AGENCY: Food and Drug Administration, HHS.

ACTION: Notice.

SUMMARY: The Food and Drug Administration (FDA) is announcing the availability of draft guidance for industry (#137) entitled ''Analytical Methods Description for Type C Medicated Feeds.'' This draft guidance provides our recommendations for describing methods for analyzing new animal drugs in Type C medicated feeds.

DATES: Submit written or electronic comments on this draft guidance by September 11, 2006 to ensure their adequate consideration in preparation of the final document. General comments on agency guidance documents are welcome at any time.

ADDRESSES: Submit written requests for single copies of the draft guidance to the Communications Staff (HFV–12), Center for Veterinary Medicine, Food and Drug Administration, 7519 Standish Pl., Rockville, MD 20855. Send one self-addressed adhesive label to assist that office in processing your requests.

Submit written comments on the draft guidance to the Division of Dockets Management (HFA–305), Food and Drug Administration, 5630 Fishers Lane, rm. 1061, Rockville, MD 20852. Comments should be identified with the full title of the draft guidance and the docket number found in brackets in the heading of this document. Submit electronic comments to *http://www.fda.gov/dockets/ecomments*. See the **SUPPLEMENTARY INFORMATION** section for electronic access to the draft guidance document.

FOR FURTHER INFORMATION CONTACT: Rebecca L. Owen, Center for Veterinary Medicine (HFV–141), Food and Drug Administration, 7500 Standish Pl., Rockville, MD 20855, 240–276–9842, e-mail: *rebecca.owen@fda.hhs.gov.*

SUPPLEMENTARY INFORMATION:

I. Background

Section 512 of the Federal Food, Drug and Cosmetic Act (21 U.S.C. 360b) establishes the requirements for new animal drug approval. FDA regulations in part 514 (21 CFR part 514) specify the information you must submit as part of your new animal drug application (NADA) and the proper format for the NADA submission. As part of your NADA submission, you must include a ''detailed description of the collection of samples and the analytical procedures to which they are subjected'' (§ 514.1(b)(5)(vii). This should include a description of practicable methods of analysis which have adequate sensitivity to determine the amount of the new animal drug in the final dosage form (§ 514.1(b)(5)(vii)(*a*). This draft guidance provides recommendations for describing methods for analyzing new animal drugs in Type C medicated feeds. This draft guidance applies to instrumental methods only (e.g., High Pressure Liquid Chromatography, Gas Chromatography. For guidance on other methods (e.g., microbiological methods) you should contact the center.

II. Paperwork Reduction Act of 1995

This draft guidance refers to previously approved collections of information found in FDA regulations. These collections of information are subject to review by the Office of Management and Budget (OMB) under the Paperwork Reduction Act of 1995 (44 U.S.C. 3501–3520). The collections of information in § 514.1 have been approved under OMB control numbers 0910–0032 and 0910–0154.

III. Significance of Guidance

This Level 1 draft guidance is being issued consistent with FDA's good guidance practices regulation (21 CFR 10.115). This draft guidance, when finalized, will represent the agency's current thinking on the topic. It does not create or confer any rights for or on any person and does not operate to bind FDA or the public. An alternate method may be used as long as it satisfies the requirements of applicable statutes and regulations.

IV. Comments

This draft guidance is being distributed for comment purposes only and is not intended for implementation at this time. Interested persons may submit to the Division of Dockets Management (see **ADDRESSES**) written or electronic comments regarding this draft guidance. Submit a single copy of electronic comments or two paper copies of any mailed comments, except that individuals may submit one paper copy. Comments are to be identified with the docket number found in brackets in the heading of this document. Received comments may be seen in the Division of Dockets Management between 9 a.m. and 4 p.m., Monday through Friday.

V. Electronic Access

Copies of the draft guidance document entitled ''Analytical Methods Description for Type C Medicated Feeds'' may be obtained from the CVM Home Page (*http://www.fda.gov/cvm*) and from the Division of Dockets Management Web site (*http://www.fda.gov/ohrms/dockets/default.htm*).

Dated: June 21, 2006.

Jeffrey Shuren,

Assistant Commissioner for Policy.

[FR Doc. 06–5860 Filed 6–27–06; 8:45 am]

BILLING CODE 4160–01–S

DEPARTMENT OF HEALTH AND HUMAN SERVICES

National Institutes of Health

Government-Owned Inventions; Availability for Licensing

AGENCY: National Institutes of Health, Public Health Service, HHS.

ACTION: Notice.

SUMMARY: The inventions listed below are owned by an agency of the U.S. Government and are available for licensing in the U.S. in accordance with 35 U.S.C. 207 to achieve expeditious commercialization of results of federally-funded research and development. Foreign patent applications are filed on selected inventions to extend market coverage for companies and may also be available for licensing.

ADDRESSES: Licensing information and copies of the U.S. patent applications listed below may be obtained by writing to the indicated licensing contact at the Office of Technology Transfer, National Institutes of Health, 6011 Executive Boulevard, Suite 325, Rockville, Maryland 20852–3804; telephone: 301/496–7057; fax: 301/402–0220. A signed Confidential Disclosure Agreement will be required to receive copies of the patent applications.

Agonist Epitopes for Renal Cell Carcinoma

Description of Technology: Approximately 30,000 patients are diagnosed with renal cell carcinoma (RCC) each year in the United States, and an estimated 12,000 patients die of this disease. Most patients are diagnosed with advanced local disease or metastatic disease. Metastatic RCC carries a poor prognosis with median survivals in the range of 10–12 months. Drugs that inhibit VEGF receptor tyrosine kinases such as Sorafenib and Sunitinib have recently been approved by the FDA to treat metastatic RCC. Although a significant percentage of patients will achieve a partial response or disease stabilization with these agents, complete responses are rare and disease progression eventually ensues. RCC is unusual among solid tumors as it appears to be susceptible to immunotherapy. Cytokines such as IL–2 and IFN-alpha nonspecifically stimulate the immune system resulting in disease regression. Unfortunately, these drugs achieve success in only a minority (15–20%) of the metastatic RCC patient population. Therefore, new methods are needed to improve on immune-based therapies and expand the curative potential of therapies for patients with RCC.

The present invention discloses peptides and antigen epitopes specific for RCC for use in the diagnosis, vaccination, or adoptive infusion of antigen specific T cells to treat patients with metastatic RCC. The immunogenic peptide, which binds to the HLA–A11 epitope, was identified in a patient with metastatic RCC that under went an investigational allogeneic hematopoietic stem cell transplant. Cancer regression occurred post-transplant consistent with a graft-vs-tumor effect. A T-cell line, expanded from the patient's blood cells at the time of tumor regression, was isolated and subsequently shown to kill the patients RCC cells in vitro. Expression and sequencing studies revealed that the patient's T-cells recognize an antigen epitope derived from a human endogenous retrovirus (HERV). Further, pre-clinical studies using quantitative real-time PCR found that this HERV was expressed in eight of 14 RCC tumor cell lines with no HERV expression in patient fibroblasts, hematopoietic cells or in c-DNAs analyzed from 48 different normal tissues. Plans are underway to investigate the immunogenic potential of this peptide to induce expansion of T-cells that are cytotoxic to RCC cells in vitro and in pre-clinical animal models.

Inventors: Richard W. Childs, *et al.* (NHLBI).

Publications: Details of the invention are published in:

1. I. Delgado-Espinoza, *et al.*, ''Nonmyeloablative transplantation for solid tumors: A new frontier for allogeneic immunotherapy,'' *Expert Rev Anticancer Ther.* 2004 Oct;4(5):865–75.

2. Y. Takahashi, *et al.*, ''Nonmyeloablative transplantation: An allogeneic-based immunotherapy for renal cell carcinoma,'' *Clin Cancer Res.* 2004 Sep 15;10(18 Pt 2):6353S–9S.

3. R.W. Childs, *et al.*, ''Regression of Metastatic Renal-Cell Carcinoma after Nonmyeloablative Allogeneic Peripheral-Blood Stem-Cell Transplantation,'' *N Engl J Med.* 2000 Sep 14;343:750–758.

4. Marco Bregni, Naoto T. Ueno, and Richard Childs. Meeting Report: The Second International Meeting on Allogeneic Transplantation in Solid Tumors (ATST). Bone Marrow Transplantation (Submitted 2006).

Patent Status: U.S. Provisional Application No. 60/783,350 filed 17 Mar 2005 (HHS Reference No. E–122–2006/0–US–01).

Licensing Status: Available for non-exclusive or exclusive licensing.

Licensing Contact: Michelle A. Booden, PhD; 301/451–7337; *boodenm@mail.nih.gov*.

Collaborative Research Opportunity: The Hematology Branch of the NHLBI is seeking statements of capability or interest from parties interested in collaborative research to further develop, evaluate, or commercialize therapeutic treatment approaches targeting this novel RCC antigen. Please contact Dr. Richard Childs at 301/594–8008 or *childsr@nhlbi.nih.gov* for more information.

Immunogenic Peptides and Methods of Use for Treating Prostrate and Uterine Cancers

Description of Technology: Cancer of the prostate is the most commonly diagnosed cancer in men and the second leading cause of cancer death in men. Despite the use of standard therapy, including surgery, radiotherapy, chemotherapy, and/or hormonal therapy more than 30,000 men will die from prostate cancer. Moreover, current therapy has limited success against metastatic androgen insensitive prostate cancer. A potential systemic treatment for all subclasses of prostate cancer is immunotherapy, either alone or in combination with standard radiation or chemotherapy.

Prostate Antigen Gene-4 (PAGE4) is an X chromosome-linked cancer-testis antigen that is highly expressed in prostate and uterine cancers. To this end, Drs. Jeffery Schlom, Kwong Tsang, and Ira Pastan have identified and characterized novel PAGE4 cytotoxic T-cell lymphocyte (CTL) epitopes and enhanced agonist epitopes. Preclinical studies performed by Dr. Schlom and colleagues indicate that the PAGE4 agonist epitopes bound HLA-A2 molecules at lower peptide concentrations, form more stable peptide HLA–A2 complexes, induce higher levels of production of INFγ, Granzyme B, TNFα, IL-2, and lymphotactin by PAGE4 specific T-cell lines, and T-cell lines generated against the agonist peptide were more efficient at lysing human tumor cells expressing native PAGE4. Thus, these agonist epitopes of PAGE4 could be incorporated into immunotherapy protocols, and may constitute an alternative and/or additional approach for the treatment of PAGE4 expressing prostate and uterine cancers.

Development Status: The Laboratory of Tumor Immunobiology plans to initiate clinical studies utilizing this technology and collaborative opportunities may be available.

Inventors: Jeffrey Schlom, Kwong-Yok Tsang, Ira Pastan (NCI).

Publications: Publications which may provide background information for this technology include:

1. C. Iavarone, *et al.*, ''PAGE4 is a cytoplasmic protein that is expressed in normal prostate and in prostate cancers,'' *Mol Cancer Ther.* 2002 Mar;1(5):329–335.

2. L. Prikler, *et al.*, ''Adaptive immunotherapy of the advanced prostate cancer—cancer testis antigen (CTA) as possible target antigens,'' *Aktuelle Urol.* 2004 Aug;35(4):326–330. [article in German].

Patent Status: U.S. Provisional Application No. 60/776,506 filed 24 Feb 2006 (HHS Reference No. E–104–2006/0–US–01).

Licensing Status: Available for non-exclusive or exclusive licensing.

Licensing Contact: Michelle A. Booden, PhD; 301/451–7337; *boodenm@mail.nih.gov*.

Collaborative Research Opportunity: The NCI Laboratory of Tumor Immunobiology is seeking statements of capability or interest from parties interested in collaborative research to further develop, evaluate, or commercialize cancer vaccine technology encompassing PAGE4. Please contact Denise M. Crooks, PhD, at 301/451–3943 and/or *crooksd@mail.nih.gov* for more information.

Novel Human IGF–1 Specific IGF–I and IGF–II Cross-Reactive Human Monoclonal Antibodies as Potential Anti-Tumor Agents

Description of Technology: Cancer is one of the leading causes of death in United States and it is estimated that there will be approximately 600,000 deaths caused by cancer in 2006. A major drawback of the current chemotherapy-based therapeutics is the cytotoxic side-effects associated with them. Thus there is a dire need to develop new therapeutic strategies with fewer side-effects. Monoclonal antibody-based therapies have taken a lead among the new cancer therapeutic approaches.

The type 1 insulin-like growth factor (IGF) receptor (IGF1R) is over-expressed by many tumors and mediates proliferation, motility, and protection from apoptosis. Agents that inhibit IGF1R expression or function can potentially block tumor growth and metastasis. Its major ligands, IGF–I, and IGF–II are over-expressed by multiple tumor types. Previous studies indicate that inhibition of IGF–I, and/or IGF–II binding to its cognizant receptor negatively modulates signal transduction through the IGF pathway and concomitant cell proliferation and growth. Therefore, use of humanized or fully human antibodies against IGFs represents a valid approach to inhibit tumor growth.

The present invention discloses the identification and characterization of three (3) novel fully human monoclonal antibodies designated m705, m706, and m708, which are specific for insulin-like growth factor (IGF)–I. Two (2) of the three (3) antibodies, m705 and m706 are specific for IGF–I and do not cross react with IGF–II and insulin while, m708 cross reacts with IGF–II. These antibodies can be used to prevent binding of IGF–I to its concomitant receptor IGFIR, consequently, modulating diseases such as cancer. Additional embodiments describe methods for treating various human diseases associated with aberrant cell growth and motility including breast, prostate, and leukemia carcinomas. Thus, these novel IGF–I antibodies may provide a therapeutic intervention for multiple carcinomas.

Development Status: The technology is in the pre-clinical stage; animal studies are currently under way.

Inventors: Dimiter S. Dimitrov and Zhongyu Zhu (NCI).

Publications:

1. A manuscript from the IGF–I work is in preparation (Copy can be provided with Confidential Disclosure Agreement).

2. Y. Feng, Z. Zhu, X. Xiao, V. Choudhry, J.C. Barrett, D.S. Dimitrov, ''Novel human monoclonal antibodies to insulin-like growth factor (IGF)–II that potently inhibit the IGF receptor type I signal transduction function,'' *Mol Cancer Ther.* 2006 Jan; 5 (1):114–120.

Patent Status: U.S. Provisional Patent Application filed 07 Apr 2006 (HHS Reference No. E–336–2005/0–US–01).

Licensing Status: This technology is available for licensing under an exclusive or non-exclusive patent license.

Licensing Contact: Michelle A. Booden, PhD; 301/451–7337; *boodenm@mail.nih.gov*.

Collaborative Research Opportunity: The NCI Center for Cancer Research Nanobiology Program is seeking statements of capability or interest from parties interested in collaborative research to further develop, evaluate, or commercialize monoclonal antibodies to treat human diseases. Please contact Melissa Maderia at *maderiam@mail.nih.gov* or by phone at (301) 846–5465 for more information.

Immortal Human Prostate Epithelial Cell Cultures as a Prostate Cancer Model

Description of Technology: The National Institutes of Health has multiple immortalized, malignant, human, adult prostate epithelial cell lines available for license. They are useful as models in epithelial cell oncogenesis studies and in the diagnosis and treatment of prostate cancer.

The cell lines were generated from primary adenocarcinomas of the prostate. Long-term cultures were established by immortalizing cells with human papillomavirus (HPV) transforming proteins. The cultures were characterized and single-cell clones with unique genetic characteristics were selected based on allelic loss of heterozygosity (LOH). Tissue-matched normal cell lines are available also, useful for the appropriate controls.

The invention also encompasses polyclonal and monoclonal antibodies directed to the cell lines, which may be useful as immunotherapeutics.

Applications: (1) Screening tool to identify novel genes unique to or overexpressed in prostate cancer; (2) Raising of prostate cancer-reactive antibodies, useful as immunotherapeutics or diagnostics; (3) Screen for compounds that kill tumor cells and represent potential therapeutic agents; (4) Identification of prostate cancer antigens to develop recombinant prostate cancer vaccines.

Inventors: Susan L. Topalian, W. Marston Linehan, Robert K. Bright, Cathy D. Vocke (NCI).

Publication: R.K. Bright, *et al.*, ''Generation and genetic characterization of immortal human prostate epithelial cell lines derived from primary cancer specimens,'' *Cancer Res.* 1997 Mar 5;57(5):995–1002.

Patent Status: U.S. Patent 6,982,168 issued on 07 May 2003 (HHS Reference No. E–053–1996/0–US–03).

Licensing Status: Available for non-exclusive internal use and biological material license.

Licensing Contact: Michelle A. Booden, PhD; 301/451–7337; *boodenm@mail.nih.gov*.

Collaborative Research Opportunity: The NCI Center for Cancer Research, Surgery Branch, is seeking statements of capability or interest from parties interested in collaborative research to further develop, evaluate, or commercialize this technology. Please contact Brian W. Bailey, PhD, at 301/451–2158 or *bbailey@mail.nih.gov* for more information.

Dated: June 21, 2006.

David R. Sadowski,

Acting Director, Division of Technology Development and Transfer, Office of Technology Transfer, National Institutes of Health.

[FR Doc. 06–5867 Filed 6–27–06; 8:45 am]

BILLING CODE 4140–01–P

DEPARTMENT OF HEALTH AND HUMAN SERVICES

National Institutes of Health

Government-Owned Inventions; Availability for Licensing

AGENCY: National Institutes of Health, Public Health Service, HHS.

ACTION: Notice.

SUMMARY: The inventions listed below are owned by an agency of the U.S. Government and are available for licensing in the U.S. in accordance with 35 U.S.C. 207 to achieve expeditious commercialization of results of Federally-funded research and development. Foreign patent applications are filed on selected inventions to extend market coverage for companies and may also be available for licensing.

ADDRESSES: Licensing information and copies of the U.S. patent applications listed below may be obtained by writing to the indicated licensing contact at the Office of Technology Transfer, National Institutes of Health, 6011 Executive Boulevard, Suite 325, Rockville, Maryland 20852–3804; telephone: 301/496–7057; fax: 301/402–0220. A signed Confidential Disclosure Agreement will be required to receive copies of the patent applications.

Treatment of Inflammatory Bowel Disease (IBD) Using NF–KB Decoy Polynucleotides

Warren Strober (NIAID), Ivan Fuss (NIAID), Atsushi Kitani (NIAID), and Stefan Fichtner-Feigl (NIAID)

U.S. Patent Application No. 11/125,919 filed 10 May 2005 (HHS Reference No. E–108–2005/0–US–01); PCT International Application filed 10 May 2006 (HHS Reference No. E–108–2005/0–PCT–02)

Licensing Contact: Susan Carson, D. Phil; 301/435–5020; *carsonsu@mail.nih.gov*.

Inflammatory Bowel Diseases (IBDs; Crohn's disease and ulcerative colitis) are chronic inflammatory disorders affecting almost 1 million people in the developed world at an estimated annual cost of one billion dollars in lost work days. Current treatments include corticosteroids, 5-aminosalicylates and immunomodulators but novel and more effective therapies without adverse side effects continue to be needed. NIH researchers have previously shown that a variety of immunomodulators affecting the Th1 and Th2 T cell responses which underlie Inflammatory Bowel Diseases can be used to treat IBD disease models and have now extended this work by inhibiting NF–KB transcriptional activity in a variety of animal models using decoy oligodeoxynucleotides (decoy ODNs).

Dr. Strober and colleagues at the National Institute of Allergy and Infectious Diseases (NIAID) have shown that intrarectal (i.r.) or intraperitoneal (i.p.) administration of decoy ODNs encapsulated in a viral envelope (HVJ–E) prevented and treated a model of acute trinitrobenzene sulfonic acid-induced (TNBS-induced) colitis, a model for Crohn's disease, as assessed by clinical course and the effect on Th1 cytokine production. NF–KB decoy ODNs were also shown to be an effective treatment of a model of chronic TNBS-colitis, inhibiting both the production of IL–23/Il–17 and the development of fibrosis that characterizes this model. Treatment of TNBS-induced inflammation by i.r. administration of NF–KB decoy ODNs did not inhibit NF–KB in extraintestinal organs and resulted in CD4+ T cell apoptosis, suggesting that such treatment is highly focused and durable. Additionally, NF–KB decoy ODNs also prevented and treated oxazolone-colitis, a mouse model for ulcerative colitis, and thus affected a Th2-mediated inflammatory process. In each case, decoy administration led to inflammation clearing effects, suggesting a therapeutic potency

applicable to human IBD [J. Clin. Invest. (2005) 115, 3057–3071].

Available for licensing are methods for treating or preventing the inflammatory response of IBDs by intrarectally or intraperitoneally administering a therapeutic effective amount of NF–KB decoy ODN. Claims are directed to treatment of Th1 and Th2 inflammatory response and these studies suggest that NF–KB decoy ODNs targeting the consensus NF–KB binding site and encapsulated in a viral envelope represent an effective approach for the treatment of IBDs.

Related IBD technologies available for licensing also include IL–13 modulators and inhibitors (HHS Reference No. E–131–2002/0–PCT–02, WO 2004/001655, filed 14 June 2002) and IL–13 mutant and chimeric molecules (HHS Reference No. E–003–2005/0–US–01, U.S. Provisional Patent Application No. 60/671,624 filed 15 April 2005).

In addition to licensing, the technology is available for further development through collaborative research opportunities with the inventors.

Treatment and Prevention of Inflammatory Bowel Disease (IBD) using Mutant and Chimeric IL–13 Molecules

Warren Strober (NIAID), Ivan Fuss (NIAID), Peter Mannon (NIAID), Jan Preiss (NIAID), Raj Puri (FDA), Koji Kawakami (FDA), Stefan Fichtner-Feigl (NIAID), and Atsushi Kitani (NIAID)

U.S. Provisional Patent Application No. 60/671,624 filed 15 April 2005 (HHS Reference No. E–003–2005/ 0-US–01); PCT International Application filed 14 April 2006 (HHS Reference No. E–003–2005/0–PCT–02)

Licensing Contact: Susan Carson, D. Phil; 301/435–5020; *carsonsu@mail.nih.gov*.

Ulcerative colitis (UC) is a chronic inflammatory disease of the colorectum and affects approximately 400,000 people in the United States. The cause of UC is not known, although an abnormal immunological response to bacterial antigens in the gut microflora is thought to be involved. Present treatments for UC include anti-inflammatory therapy using aminosalicylates or corticosteroids, as well as immunomodulators and diet. However, 25–40% of ulcerative colitis patients must eventually have their colons removed due to massive bleeding, severe illness, rupture of the colon, risk of cancer or due to side effects of corticosteroids and novel treatments are still actively being sought. NIH scientists and their collaborators have used a mouse model of experimental colitis (oxazolone colitis, OC) to show that IL–13, a Th2 cytokine, is a significant pathologic factor in OC and that neutralizing IL–13 in these animals effectively prevents colitis [Immunity (2002) 17, 629–638].

OC is a colitis induced by intrarectal administration of a relatively low dose of the haptenating agent oxazolone subsequent to skin sensitization with oxazolone. A highly reproducible and chronic colonic inflammation is obtained that is histologically similar to human ulcerative colitis. Studies show that Natural Killer T (NKT) cells, rather than conventional CD4+T cells, mediate oxazolone colitis and are the source of IL–13 as well as being activated by CD1-expressing intestinal epithelial cells. Tissue removed from ulcerative colitis patients were also shown to contain increased numbers of nonclassical NKT cells that produce markedly increased amounts of IL–13 and that in keeping with epithelial damage being a key factor in UC, these NKT cells are cytotoxic for epithelial cells [J. Clin. Invest. (2004) 113, 1490–1497]. Building on their previous work, scientists at NIAID and FDA have shown that an Il-13 chimeric fusion protein linked to an effector molecule was able to prevent colitis in a mouse model of ulcerative colitis.

Available for licensing are methods for treating or preventing the inflammatory response of IBD by inhibiting the binding of IL–13 to IL–13 receptors on NKT cells. Additionally, these mutant and chimeric Il-13 molecules are able to block the chronic inflammatory response that results in fibrosis as seen in Crohn's disease. Preventing the inflammatory response of colitis by either modulating or blocking IL–13 and NKT cell activity continues to be an effective therapeutic approach in animal models of colitis with implications for the treatment of human ulcerative colitis and for the treatment of fibrosis associated with Crohn's disease.

Related IBD technologies available for licensing also include IL–13 modulators and inhibitors (HHS Reference No. E–131–2002/0–PCT–02, WO 2004/001655, filed 14 June 2002) and NF-kappa B decoy oligonucleotides [HHS Reference No. E–108–2005/0–US–01, U.S. Patent Application No. 11/125,919, filed 10 May 2005; J. Clin. Invest. (2005) 115, 3057–3071].

In addition to licensing, the technology is available for further development through collaborative research opportunities with the inventors.

Dated: June 21, 2006.

David R. Sadowski,

Acting Director, Division of Technology Development and Transfer, Office of Technology Transfer, National Institutes of Health.

[FR Doc. 06–5868 Filed 6–27–06; 8:45 am]

BILLING CODE 4140–01–P

DEPARTMENT OF HEALTH AND HUMAN SERVICES

National Institutes of Health

National Center for Research Resources; Notice of Closed Meetings

Pursuant to section 10(d) of the Federal Advisory Committee Act, as amended (5 U.S.C. Appendix 2), notice is hereby given of the following meetings.

The meetings will be closed to the public in accordance with the provisions set forth in sections 552b(c)(4) and 552b(c)(6), Title 5 U.S.C., as amended. The grant applications and the discussions could disclose confidential trade secrets or commercial property such as patentable material, and personal information concerning individuals associated with the grant applications, the disclosure of which would constitute a clearly unwarranted invasion of personal privacy.

Name of Committee: National Center for Research Resources Special Emphasis Panel, CTSA Center Grants #1.

Date: July 11–12, 2006.

Time: 8 a.m. to 5 p.m.

Agenda: To review and evaluate grant applications.

Place: Double Tree Rockville, 1750 Rockville Pike, Rockville, MD 20852.

Contact Person: Sheryl K. Brining, PhD, Scientific Review Administrator, Director, Office of Review, NCRR, National Institutes of Health, 6701 Democracy Boulevard, 1 Democracy Plaza, Room 1074, MSC 4874, Bethesda, MD 20892–4874. (301) 435–0811. *sb44k@nih.gov*.

This notice is being published less than 15 days prior to the meeting due to the timing limitations imposed by the review and funding cycle.

Name of Committee: National Center for Research Resources Special Emphasis Panel, CTSA Center Grants #2.

Date: July 20–21, 2006.

Time: 8 a.m. to 5 p.m.

Agenda: To review and evaluate grant applications.

Place: Double Tree Rockville, 1750 Rockville Pike, Rockville, MD 20852.

Contact Person: Guo Zhang, PhD, Scientific Review Administrator, National Center for Research Resources/OR, National Institutes of Health, 6701 Democracy Boulevard, 1 Democracy Plaza, Room 1064, Bethesda, MD 20892–4874. (301) 435–0812. *zhanggu@nih.gov*.

Name of Committee: National Center for Research Resources Special Emphasis Panel, Planning Grants for CTSA.
Date: July 25–26, 2006.
Time: 8 a.m. to 5 p.m.
Agenda: To review and evaluate grant applications.
Place: Double Tree Rockville, 1750 Rockville Pike, Rockville, MD 20852.
Contact Person: Mohan Viswanathan, PhD, Deputy Director, Office of Review, NCRR, National Institutes of Health, 6701 Democracy Boulevard, Room 1084, MSC 4874, 1 Democracy Plaza, Bethesda, MD 20892–4874. (301) 435–0829. *mv10f@nih.gov.*

(Catalogue of Federal Domestic Assistance Program Nos. 93.306, Comparative Medicine; 93.333, Clinical Research; 93.371, Biomedical Technology; 93.389, Research Infrastructure, 93.306, 93.333, National Institutes of Health, HHS)

Dated: June 20, 2006.

Linda Payne,

Acting Director, Office of Federal Advisory Committee Policy.

[FR Doc. 06–5718 Filed 6–27–06; 8:45 am]

BILLING CODE 4140–01–M

DEPARTMENT OF HEALTH AND HUMAN SERVICES

National Institutes of Health

National Eye Institute; Notice of Closed Meetings

Pursuant to section 10(d) of the Federal Advisory Committee Act, as amended (5 U.S.C. Appendix 2), notice is hereby given of the following meetings.

The meetings will be closed to the public in accordance with the provisions set forth in sections 552b(c)(4) and 552b(c)(6), Title 5 U.S.C., as amended. The grant applications and the discussions could disclose confidential trade secrets or commercial property such as patentable material, and personal information concerning individuals associated with the grant applications, the disclosure of which would constitute a clearly unwarranted invasion of personal privacy.

Name of Committee: National Eye Institute Special Emphasis Panel; Training in Neurolimaging: Integrating First Principles and Applications.
Date: July 10, 2006.
Time: 8:30 a.m. to 5 p.m.
Agenda: To review and evaluate grant applications.
Place: Bethesda Marriott, 5151 Pooks Hill Road, Bethesda, MD 20814.
Contact Person: Houman H. Araj, PhD, Scientific Review Administrator, Division of Extramural Research, National Eye Institute, NIH, 5635 Fishers Lane, Suite 1300, Bethesda, MD 20892–9602. 301–451–2020. *haraj@mail.nih.gov.*

Name of Committee: National Eye Institute Special Emphasis Panel; NEI Clinical applications.
Date: July 28, 2006.
Time: 8:30 a.m. to 5 p.m.
Agenda: To review and evaluate grant applications.
Place: Embassy Suites at the Chevy Chase Pavilion, 4300 Military Road, NW., Washington, DC 20015.
Contact Person: Anne E. Schaffner, PhD, Scientific Review Administrator, Division of Extramural Research, National Eye Institute, 5635 Fishers Lane, Suite 1300, MSC 9300, Bethesda, MD 20892–9300. (301) 451–2020, *aes@nei.nih.gov.*

(Catalogue of Federal Domestic Assistance Program Nos. 93.867, Vision Research, National Institutes of Health, HHS)

Dated: June 20, 2006.

Linda Payne,

Acting Director, Office of Federal Advisory Committee Policy.

[FR Doc. 06–5722 Filed 6–27–06; 8:45 am]

BILLING CODE 4140–01–M

DEPARTMENT OF HEALTH AND HUMAN SERVICES

National Institutes of Health

National Institute of Allergy and Infectious Diseases; Notice of Closed Meeting

Pursuant to section 10(d) of the Federal Advisory Committee Act, as amended (5 U.S.C. Appendix 2), notice is hereby given of the following meeting.

The meeting will be closed to the public in accordance with the provisions set forth in sections 552b(c)(4) and 552b(c)(6), Title 5 U.S.C., as amended. The grant applications and the discussions could disclose confidential trade secrets or commercial property such as patentable material, and personal information concerning individuals associated with the grant applications, the disclosure of which would constitute a clearly unwarranted invasion of personal privacy.

Name of Committee: Microbiology, Infectious Diseases and AIDS Initial Review Group; Acquired Immunodeficiency Syndrome Research Review Committee AIDS Research Review Committee (AIDSRRC).
Date: July 12–13, 2006.
Time: 8:30 a.m. to 5 p.m.
Agenda: To review and evaluate grant applications.
Place: Courtyard Gaithersburg Washington Center, 204 Boardwalk Place, Gaithersburg, MD 20878.
Contact Person: Peter R. Jackson, PhD, Chief, ACERB, Scientific Review Program, Division of Extramural Activities/NIH/NIAID/DHHS, 6700 B Rockledge Drive, MSC 7616, Room 3133, Bethesda, MD 20892–7616. 301–496–2550. *pjackson@niaid.nih.gov.*

This notice is being published less than 15 days prior to the meeting due to the timing limitations imposed by the review and funding cycle.

(Catalogue of Federal Domestic Assistance Program Nos. 93.855, Allergy, Immunology, and Transplantation Research; 93.856, Microbiology and Infectious Diseases Research, National Institutes of Health, HHS)

Dated: June 20, 2006.

Linda Payne,

Acting Director, Office of Federal Advisory Committee Policy.

[FR Doc. 06–5719 Filed 6–27–06; 8:45 am]

BILLING CODE 4140–01–M

DEPARTMENT OF HEALTH AND HUMAN SERVICES

National Institutes of Health

National Institute of Diabetes and Digestive and Kidney Diseases; Notice of Closed Meeting

Pursuant to section 10(d) of the Federal Advisory Committee Act, as amended (5 U.S.C. Appendix 2), notice is hereby given of the following meeting.

The meeting will be closed to the public in accordance with the provisions set forth in sections 552b(c)(4) and 552b(c)(6), Title 5 U.S.C., as amended. The grant applications and the discussions could disclose confidential trade secrets or commerical property such as patentable material, and personal information concerning individuals associated with the grant applications, the disclosure of which would constitute a clearly unwarranted invasion of personal privacy.

Name of Committee: National Institute of Diabetes and Digestive and Kidney Diseases Special Emphasis Panel; Ancillary Studies to Ongoing NIDDK Clinical Research Studies.
Date: July 17, 2006.
Time: 9 a.m. to 5 p.m.
Agenda: To review and evaluate grant applications.
Place: Bethesda Marriott Suites, 6711 Democracy Boulevard, Bethesda, MD 20817.
Contact Person: Carol J. Goter-Robinson, PhD, Scientific Review Administrator, Review Branch, DEA, NIDDK, National Institutes of Health, Room 748, 6707 Democracy Boulevard, Bethesda, MD 20892–5452. (301) 594–7791. *goterrobinsonc@extra.niddk.nih.gov.*

(Catalogue of Federal Domestic Assistance Program Nos. 93.847, Diabetes, Endocrinology and Metabolic Research; 93.848, Digestive Diseases and Nutrition Research; 93.849, Kidney Diseases, Urology and Hematology Research, National Institutes of Health, HHS)

Dated: June 21, 2006.

Linda Payne,

Acting Director, Office of Federal Advisory Committee Policy.

[FR Doc. 06–5720 Filed 6–27–06; 8:45 am]

BILLING CODE 4140–01–M

DEPARTMENT OF HEALTH AND HUMAN SERVICES

National Institutes of Health

Center for Scientific Review; Amended Notice of Meeting

Notice of hereby given of a change in the meeting of the Center for Scientific Review Special Emphasis Panel, June 29, 2006, 6 p.m. to June 30, 2006, 4 p.m., Embassy Suites at the Chevy Chase Pavilion, 4300 Military Road, NW., Washington, DC, 20015 which was published in the **Federal Register** on June 2, 2006, 71 FR 32109–32110.

The starting time of the meeting on June 29, 2006 has been changed to 7:30 p.m. until adjournment. The meeting dates and location remain the same. The meeting is closed to the public.

Dated: June 20, 2006.

Linda Payne,

Acting Director, Office of Federal Advisory Committee Policy.

[FR Doc. 06–5721 Filed 6–27–06; 8:45 am]

BILLING CODE 4140–01–M

DEPARTMENT OF HEALTH AND HUMAN SERVICES

National Institutes of Health

Center for Scientific Review; Notice of Closed Meetings

Pursuant to section 10(d) of the Federal Advisory Committee Act, as amended (5 U.S.C. Appendix 2), notice is hereby given of the following meetings.

The meetings will be closed to the public in accordance with the provisions set forth in sections 552b(c)(4) and 552b(c)(6), Title 5 U.S.C., as amended. The grant applications and the discussions could disclose confidential trade secrets or commercial property such as patentable material, and personal information concerning individuals associated with the grant application, the disclosure of which would constitute a clearly unwarranted invasion of personal privacy.

Name of Committee: Center for Scientific Review Special Emphasis Panel, Stem Cells and Cardiovascular System.

Date: July 12, 2006.

Time: 12 p.m. to 1 p.m.

Agenda: To review and evaluate grant applications.

Place: National Institutes of Health, 6701 Rockledge Drive, Bethesda, MD 20892. (Telephone Conference Call).

Contact Person: Anshumali Chaudhari, PhD, Scientific Review Administrator, Center for Scientific Review, National Institutes of Health, 6701 Rockledge Drive, Room 4124, MSC 7802, Bethesda, MD 20892. (301) 435–1210. *chaudhaa@csr.nih.gov.*

Name of Committee: Center for Scientific Review Special Emphasis Panel, Shared Instrumentation: Centrifuges and Factionation Systems.

Date: July 13, 2006.

Time: 1:30 p.m. to 3:30 p.m.

Agenda: To review and evaluate grant applications.

Place: National Institutes of Health, 6701 Rockledge Drive, Bethesda, MD 20892. (Telephone Conference Call).

Contact Person: Sally Ann Amero, PhD, Scientific Review Administrator, Center for Scientific Review, National Institutes of Health, 6701 Rockledge Drive, Room 4190, MSC 7849, Bethesda, MD 20892. 301–435–1159. *ameros@csr.nih.gov.*

Name of Committee: Center for Scientific Review Special Emphasis Panel, Member Conflict: Innate Immunity, Antigen Processing, Complement.

Date: July 14, 2006.

Time: 1 p.m. to 3:30 p.m.

Agenda: To review and evaluate grant applications.

Place: National Institutes of Health, 6701 Rockledge Drive, Bethesda, MD 20892. (Telephone Conference Call).

Contact Person: Samuel C. Edwards, PhD, Scientific Review Administrator, Center for Scientific Review, National Institutes of Health, 6701 Rockledge Drive, Room 4200, MSC 7812, Bethesda, MD 20892. (301) 435–1152. *edwardss@csr.nih.gov.*

Name of Committee: Center for Scientific Review Special Emphasis Panel, Member Conflict: B and T Lymphocyte Biology.

Date: July 18, 2006.

Time: 1 p.m. to 3:30 p.m.

Agenda: To review and evaluate grant applications.

Place: National Institutes of Health, 6701 Rockledge Drive, Bethesda, MD 20892. (Telephone Conference Call).

Contact Person: Samuel C. Edwards, PhD, Scientific Review Administrator, Center for Scientific Review, National Institutes of Health, 6701 Rockledge Drive, Room 4200, MSC 7812, Bethesda, MD 20892. (301) 435–1152. *edwardss@csr.nih.gov.*

Name of Committee: Center for Scientific Review Special Emphasis Panel, Neurophysiology Devices.

Date: July 20, 2006.

Time: 1 p.m. to 2 p.m.

Agenda: To review and evaluate grant applications.

Place: National Institutes of Health, 6701 Rockledge Drive, Bethesda, MD 20892. (Telephone Conference Call).

Contact Person: Vinod Charles, PhD, Scientific Review Administrator, Center for Scientific Review, National Institutes of Health, 6701 Rockledge Drive, Room 5196, MSC 7846, Bethesda, MD 20892. 301–435–0902. *charlesvi@csr.nih.gov.*

Name of Committee: Center for Scientific Review Special Emphasis Panel, Molecular, Cellular, and Developmental Neurobiological Small Business Applications.

Date: July 25, 2006.

Time: 8:30 a.m. to 5 p.m.

Agenda: To review and evaluate grant applications.

Place: Jury's Washington Hotel, 1500 New Hampshire Avenue, NW., Washington, DC 20036.

Contact Person: Michael A. Lang, PhD, Scientific Review Administrator, Center for Scientific Review, National Institutes of Health, 6701 Rockledge Drive, Room 4140, MSC 7850, Bethesda, MD 20892, (301) 435–1265. *langm@csr.nih.gov.*

Name of Committee: Center for Scientific Review Special Emphasis Panel, Prokaryotic Biology.

Date: July 25, 2006.

Time: 11 a.m. to 1 p.m.

Agenda: To review and evaluate grant applications.

Place: National Institutes of Health, 6701 Rockledge Drive, Bethesda, MD 20892. (Telephone Conference Call).

Contact Person: Marian Wachtel, PhD, Scientific Review Administrator, Center for Scientific Review, National Institutes of Health, 6701 Rockledge Drive, Room 3208, MSC 7858, Bethesda, MD 20892. 301–435–1148. *wachtelm@csr.nih.gov.*

Name of Committee: Center for Scientific Review Special Emphasis Panel, F03B Biophysical and Physiological Neuroscience.

Date: July 27–28, 2006.

Time: 8:30 a.m. to 5 p.m.

Agenda: To review and evaluate grant applications.

Place: Jury's Washington Hotel, 1500 New Hampshire Avenue, NW., Washington, DC 20036.

Contact Person: Michael A. Lang, PhD, Scientific Review Administrator, Center for Scientific Review, National Institutes of Health, 6701 Rockledge Drive, Room 4140, MSC 7850, Bethesda, MD 20892. (301) 435–1265. *langm@csr.nih.gov.*

(Catalogue of Federal Domestic Assistance Program Nos. 93.306, Comparative Medicine; 93.333, Clinical Research, 93.306, 93.333, 93.337, 93.393–93.396, 93.837–93.844, 93.846–93.878, 93.892, 93.893, National Institutes of Health, HHS)

Dated: June 20, 2006.

Linda Payne,

Acting Director, Office of Federal Advisory Committee Policy.

[FR Doc. 06–5723 Filed 6–27–06; 8:45 am]

BILLING CODE 4140–01–M

DEPARTMENT OF HEALTH AND HUMAN SERVICES

National Institutes of Health

Center for Scientific Review; Amended Notice of Meeting

Notice is hereby given of a change in the meeting of the Center for Scientific Review Special Emphasis Panel, June 29, 2006, 8:30 a.m., to June 30, 2006, 5 p.m., One Washington Circle Hotel, One Washington Circle, Washington, DC 20037 which was published in the **Federal Register** on June 16, 2006, 71 FR 34951.

The meeting will be held at the Morrison House, 116 S. Alfred Street, Alexandria, VA, 22314. The meeting dates and time remain the same. The meeting is closed to the public.

Dated: June 20, 2006.

Linda Payne,

Acting Director, Office of Federal Advisory Committee Policy.

[FR Doc. 06–5724 Filed 6–27–06; 8:45 am]

BILLING CODE 4140–01–M

DEPARTMENT OF HEALTH AND HUMAN SERVICES

Substance Abuse and Mental Health Services Administration

Agency Information Collection Activities: Proposed Collection; Comment Request

In compliance with Section 3506(c)(2)(A) of the Paperwork Reduction Act of 1995 concerning opportunity for public comment on proposed collections of information, the Substance Abuse and Mental Health Services Administration (SAMHSA) will publish periodic summaries of proposed projects. To request more information on the proposed projects or to obtain a copy of the information collection plans, call the SAMHSA Reports Clearance Officer on (240) 276–1243.

Comments are invited on: (a) Whether the proposed collections of information are necessary for the proper performance of the functions of the agency, including whether the information shall have practical utility; (b) the accuracy of the agency's estimate of the burden of the proposed collection of information; (c) ways to enhance the quality, utility, and clarity of the information to be collected; and (d) ways to minimize the burden of the collection of information on respondents, including through the use of automated collection techniques or other forms of information technology.

Proposed Project: Addiction Technology Transfer Centers (ATTC) Network Program Monitoring (OMB No. 0930–0216)—Revision

The Substance Abuse and Mental Health Administration's (SAMHSA) Center for Substance Abuse Treatment (CSAT) will continue to monitor program performance of its Addiction Technology Transfer Centers (ATTCs). The ATTCs disseminate current health services research from the National Institute on Drug Abuse, National Institute on Alcohol Abuse and Alcoholism, National Institute of Mental Health, Agency for Health Care Policy and Research, National Institute of Justice, and other sources, as well as other SAMHSA programs. To accomplish this, the ATTCs develop and update state-of-the-art, research-based curricula and professional development training.

Each of the forms is described below. There are no changes to any of the forms. Sixty percent of the forms are administered in person to participants at educational and training events, who complete the forms by paper and pencil. Ten percent of the training courses are online, and thus, those forms are administered online. The remaining thirty percent is made up of those 30-day follow-up forms that are distributed to consenting participants via electronic mail using an online survey tool.

Event Description: The event description form asks approximately 10 questions of the ATTC faculty/staff for each of the ATTC events. The approved form asks the event focus, format, and publications to be used in the event.

Technical Assistance and Meeting Pre-event Information: The ATTCs provide technical assistance, which is a jointly planned consultation generally involving a series of contacts between the ATTC and an outside organization/institution during which the ATTC provides expertise and gives direction toward resolving a problem or improving conditions. A meeting is an ATTC sponsored or co-sponsored event in which a group of people representing one or more agencies other than the ATTC work cooperatively on a project, problem, and/or a policy. For technical assistance and meeting events, the pre-event information form asks approximately 10 questions of each individual who participated in the event. The approved form asks the participants to report their demographic information, education, work setting, responsibilities, and training goals. Satisfaction measures after each technical assistance and meeting event and at 30-day follow-up will be collected using the CSAT Government Performance and Results Act (GPRA) Customer Satisfaction forms. The burden has been approved under OMB # 0930–0197.

Training Forms

Trainings are defined as ATTC sponsored or co-sponsored events, mainly focusing on the enhancement of knowledge and/or skills of counselors and other professionals who work with individuals with substance use disorder-related problems. The study design for trainees will include a description of each event, and a pre-post survey that collects identical information at initiation of ATTC courses/trainings, at the completion of the course/training, and again after 30 days.

Pre-Event Information Form for Training: The pre-event information form for training asks approximately 10 questions of each participant in the training. The approved form asks the participants to report demographic information, education, work setting, responsibilities, and training goals.

Post-Event Information Form for Training: The Post-Event Information Form for Training asks approximately 30 questions of each individual that participated in the training. The approved form asks the participants to report demographic information, satisfaction with the quality of the training and training materials, and to assess their level of skills in the topic area.

Followup Information Form for Training: The Followup Information Form for Training asks about 10 questions of about 25% of consenting participants. The approved form asks the participants to report demographic information, satisfaction with the quality of the training and training materials, and to assess their level of skills in the topic area.

This information will assist CSAT in documenting the numbers and types of participants in ATTC events, describing the extent to which participants report improvement in their clinical competency, and which method is most effective in disseminating knowledge to various audiences. This type of information is crucial to support CSAT in complying with GPRA reporting requirements and will inform future development of knowledge dissemination activities.

The chart below summarizes the annualized burden for this project.

Type of Respondent	Number of respondents	Responses per respondent	Hours per response	Total annual burden hours
Faculty/staff				
Event Description Form	200	1	.25	50
Meeting and Technical Assistance Participants				
Pre-Event Information Form	3,000	1	.08	240
Training Participants				
Pre-Event Information Form	27,000	1	.13	2,600
Post-Event Information Form	27,000	1	.16	4,320
Followup Information	6,750	1	.16	1,080
TOTAL	30,200			8,290

Send comments to Summer King, SAMHSA Reports Clearance Officer, Room 7–1044, One Choke Cherry Road, Rockville, MD 20857. Written comments should be received within 60 days of this notice.

Dated: June 22, 2006.

Anna Marsh,

Director, Office of Program Services.

[FR Doc. E6–10172 Filed 6–27–06; 8:45 am]

BILLING CODE 4162–20–P

DEPARTMENT OF HOMELAND SECURITY

Office of the Secretary

[Docket No. DHS–2006–0029]

Notice of Meeting of National Infrastructure Advisory Council (NIAC)

AGENCY: Directorate for Preparedness, DHS.

ACTION: Notice of meeting.

SUMMARY: The National Infrastructure Advisory Council (NIAC) will meet in open session.

DATES: Tuesday, July 11, 2006, from 1:30 p.m. to 4:30 p.m.

ADDRESSES: National Press Club, 529 14th Street, NW., Washington, DC 20045.

You may submit comments, identified by DHS–2006–0029, by *one* of the following methods:

- Federal eRulemaking Portal: *http://www.regulations.gov.* Follow the instructions for submitting comments.
- E-mail: *william.corcoran@associates.dhs.gov.* When submitting comments electronically, please include by DHS–2006–0029, in the subject line of the message.
- Mail: Jenny Menna, Department of Homeland Security, Directorate for Preparedness, Washington, DC 20528. To ensure proper handling, please reference by DHS–2006–0029, on your correspondence. This mailing address may be used for paper, disk or CD–ROM submissions.
- Hand Delivery/Courier: Jenny Menna, Department of Homeland Security, Directorate for Preparedness, Washington, DC 20528. Contact Telephone Number 703–235–5316.

Instructions: All submissions received must include the words ''Department of Homeland Security'' and DHS–2006–0029, the docket number for this action. Comments received will be posted without alteration at *www.regulations.gov,* including any personal information provided.

Docket: For access to the docket to read background documents or comments received, go to *http://www.regulations.gov.*

FOR FURTHER INFORMATION CONTACT: Jenny Menna, NIAC Designated Federal Officer, Department of Homeland Security, Washington, DC 20528; telephone 703–235–5316.

SUPPLEMENTARY INFORMATION: Notice of this meeting is given under the Federal Advisory Committee Act (FACA), Public Law 92–463, as amended (5 U.S.C. App.1 *et seq.*). At this meeting, the NIAC will be briefed on the status of several Working Group activities in which the Council is currently engaged.

This meeting is open to the public on a first-come, first-served basis. Please note that the meeting may close early if all business is finished.

A tentative agenda for the meeting is set forth below, but may be updated. Please consult the NIAC Website, *http://www.dhs.gov/niac,* for the most current agenda.

Information on Services for Individuals with Disabilities: For information on facilities or services for individuals with disabilities, or to request special assistance at the meeting, telephone the Designated Federal Officer as soon as possible.

Dated: June 23, 2006.

Jenny Menna,

Designated Federal Officer for the NIAC.

Draft Agenda of July 11, 2006 Meeting

I. Opening of Meeting
  Jenny Menna, Designated Federal Officer, NIAC, Department of Homeland Security
II. Roll Call of Members
  Jenny Menna
III. Opening Remarks and Introductions
  NIAC Chairman, *Erle A. Nye,* Chairman Emeritus, TXU Corp.
  NIAC Vice Chairman, *John T. Chambers,* President and CEO, Cisco Systems, Inc.
  Michael Chertoff, Secretary, Department of Homeland Security (DHS) (*Invited*)
  Frances Fragos Townsend, Assistant to the President for Homeland Security and Counterterrorism (*Invited*)
IV. Approval of February Minutes
  NIAC Chairman, *Erle A. Nye*
V. Final Reports and Deliberations
  NIAC Chairman, *Erle A. Nye* Presiding
  A. Intelligence Coordination
  NIAC Vice Chairman *John T. Chambers,* Chairman and CEO, Cisco Systems, Inc. and *Gilbert Gallegos,* Chief of Police (ret.), Albuquerque, New Mexico Police Department, NIAC Member
B. Deliberation and Approval of Recommendations of Final Report
  NIAC Members
VI. Status Reports on Current Working Group Initiatives
  NIAC Chairman, *Erle A. Nye* Presiding
A. Chemical, Biological and Radiological Events and the Critical Infrastructure Workforce
  Chief Rebecca F. Denlinger, Fire Chief, Cobb County, Georgia Fire and Emergency Services, NIAC Member, *Martha H. Marsh,* Chairman and CEO, Stanford Hospital and Clinics, NIAC Member and *Bruce Rohde,* Chairman and CEO Emeritus, ConAgra Foods, Inc.

B. Convergence of Physical and Cyber Technologies and Related Security Management Challenges
George Conrades, Executive Chairman, Akamai Technologies, NIAC Member, *Margaret Grayson,* President, AEP Government Solutions Group, NIAC Member, and *Gregory A. Peters,* Former President and CEO, Internap Network Services Corporation, NIAC Member.
VII. New Business
NIAC Chairman, *Erle A. Nye,* NIAC Members TBD
A. Introduction of New Initiative: The Prioritization of Critical Infrastructure for a Pandemic Outbreak in the United States
NIAC Members
B. Deliberation and Voting on Additional New Initiatives
NIAC Members
VIII. Adjournment
NIAC Chairman, *Erle A. Nye*

[FR Doc. E6–10140 Filed 6–27–06; 8:45 am]

BILLING CODE 4410–10–P

DEPARTMENT OF HOMELAND SECURITY

U.S. Citizenship and Immigration Services

Agency Information Collection Activities: Extension of a Currently Approved Information Collection; Comment Request

ACTION: 30-Day Notice of Information Collection Under Review: Application by Refugee for Waiver of Ground of Excludability; Form I–602. OMB Control No. 1615–0069.

The Department of Homeland Security, U.S. Citizenship and Immigration Services (USCIS) has submitted the following information collection request to the Office of Management and Budget (OMB) for review and clearance in accordance with the Paperwork Reduction Act of 1995. The information collection was previously published in the **Federal Register** on April 21, 2006, at 71 FR 20712. The notice allowed for a 60-day public comment period. No comments were received on this information collection.

The purpose of this notice is to allow an additional 30 days for public comments. Comments are encouraged and will be accepted until July 28, 2006. This process is conducted in accordance with 5 CFR 1320.10.

Written comments and/or suggestions regarding the item(s) contained in this notice, especially regarding the estimated public burden and associated response time, should be directed to the Department of Homeland Security (DHS), USCIS, Director, Regulatory Management Division, Clearance Office, 111 Massachusetts Avenue, 3rd Suite 3008 floor, Washington, DC 20529. Comments may also be submitted to DHS via facsimile to 202–272–8352 or via e-mail at *rfs.regs@dhs.gov.* When submitting comments by e-mail please make sure to add OMB Control Number 1615–0069. Written comments and suggestions from the public and affected agencies should address one or more of the following four points:

(1) Evaluate whether the collection of information is necessary for the proper performance of the functions of the agency, including whether the information will have practical utility;

(2) Evaluate the accuracy of the agency's estimate of the burden of the collection of information, including the validity of the methodology and assumptions used;

(3) Enhance the quality, utility, and clarity of the information to be collected; and

(4) Minimize the burden of the collection of information on those who are to respond, including through the use of appropriate automated, electronic, mechanical, or other technological collection techniques, or other forms of information technology, e.g., permitting electronic submission of responses.

Overview of this information collection:

(1) *Type of Information Collection:* Extension of a currently approved collection.

(2) *Title of the Form/Collection:* Application by Refugee for Waiver of Grounds of Excludability.

(3) *Agency form number, if any, and the applicable component of the Department of Homeland Security sponsoring the collection:* Form I–602. U.S. Citizenship and Immigration Services.

(4) *Affected public who will be asked or required to respond, as well as a brief abstract: Primary:* Individuals and households. This form is necessary to establish eligibility for waiver of excludability based on humanitarian, family unity, or public interest.

(5) *An estimate of the total number of respondents and the amount of time estimated for an average respondent to respond:* 2,500 responses at 15 minutes (.25) per response.

(5) *An estimate of the total public burden (in hours) associated with the collection:* 625 annual burden hours.

If you have additional comments, suggestions, or need a copy of the proposed information collection instrument with instructions, or additional information, please visit the USCIS Web site at: *http://uscis.gov/graphics/formsfee/forms/pra/index.htm.*

If additional information is required contact: USCIS, Regulatory Management Division, 111 Massachusetts Avenue, 3rd Floor, Suite 3008, Washington, DC 20529, (202) 272–8377.

Dated: June 23, 2006.

Richard A. Sloan,

Director, Regulatory Management Division, U.S. Citizenship and Immigration Services, Department of Homeland Security.

[FR Doc. E6–10148 Filed 6–27–06; 8:45 am]

BILLING CODE 4410–10–P

DEPARTMENT OF HOUSING AND URBAN DEVELOPMENT

[Docket No. FR–5037–N–40]

Public Housing Agency Plan

AGENCY: Office of the Chief Information Officer, HUD.

ACTION: Notice.

SUMMARY: The proposed information collection requirement described below has been submitted to the Office of Management and Budget (OMB) for review, as required by the Paperwork Reduction Act. The Department is soliciting public comments on the subject proposal.

PHAs are required to submit annual and 5-Year Plans to HUD for tenant-based assistance and operating subsidies. These Plans advise HUD, residents, and members of the public of the PHA's mission for serving low-income and very low-income families, and the PHA's strategy for addressing those needs.

DATES: *Comments Due Date:* July 28, 2006.

ADDRESSES: Interested persons are invited to submit comments regarding this proposal. Comments should refer to the proposal by name and/or OMB approval Number (2577–0226) and should be sent to: HUD Desk Officer, Office of Management and Budget, New Executive Office Building, Washington, DC 20503; fax: 202–395–6974.

FOR FURTHER INFORMATION CONTACT: Lillian Deitzer, Reports Management Officer, QDAM, Department of Housing and Urban Development, 451 Seventh Street, SW., Washington, DC 20410; e-mail Lillian Deitzer at *Lillian_L_Deitzer@HUD.gov* or telephone (202) 708–2374. This is not a toll-free number. Copies of available documents submitted to OMB may be

obtained from Ms. Deitzer or from HUD's Web site at *http://www5.hud.gov:63001/po/i/icbts/collectionsearch.cfm*.

SUPPLEMENTARY INFORMATION: This notice informs the public that the Department of Housing and Urban Development has submitted to OMB a request for approval of the Information collection described below. This notice is soliciting comments from members of the public and affecting agencies concerning the proposed collection of information to: (1) Evaluate whether the proposed collection of information is necessary for the proper performance of the functions of the agency, including whether the information will have practical utility; (2) Evaluate the accuracy of the agency's estimate of the burden of the proposed collection of information; (3) Enhance the quality, utility, and clarity of the information to be collected; and (4) Minimize the burden of the collection of information on those who are to respond; including through the use of appropriate automated collection techniques or other forms of information technology, *e.g.*, permitting electronic submission of responses.

This notice also lists the following information:

Title of Proposal: Public Housing Agency Plan.

OMB Approval Number: 2577–0226.

Form Numbers: HUD–50075, HUD–50075SA, HUD–5007SF, HUD–50076, and HUD–50077.

Description of the Need for the Information and its Proposed Use: PHAs are required to submit annual and 5–Year Plans to HUD for tenant-based assistance and operating subsidies. These Plans advise HUD, residents, and members of the public of the PHA's mission for serving low-income and very low-income families, and the PHA's strategy for addressing those needs.

Frequency of Submission: Annually.

	Number of respondents	Annual responses	×	Hours per response	=	Burden hours
Reporting Burden	3,278	1		19.6		64,466

Total Estimated Burden Hours: 64,466.

Status: Revision of a currently approved collection.

Authority: Section 3507 of the Paperwork Reduction Act of 1995, 44 U.S.C. 35, as amended.

Dated: June 21, 2006.

Lillian L. Deitzer,

Departmental Paperwork Reduction Act Officer, Office of the Chief Information Officer.

[FR Doc. 06–5861 Filed 6–27–06; 8:45 am]

BILLING CODE 4210–67–P

DEPARTMENT OF THE INTERIOR

Bureau of Land Management

Notice of Public Meeting: Resource Management Planning (RMP) Subgroup of the Resource Advisory Council to the Boise District, Bureau of Land Management, U.S. Department of the Interior

AGENCY: Bureau of Land Management, U.S. Department of the Interior.

ACTION: Notice of public meeting.

SUMMARY: In accordance with the Federal Land Policy and Management Act (FLPMA) and the Federal Advisory Committee Act of 1972 (FACA), the U.S. Department of the Interior, Bureau of Land Management (BLM) Resource Management Planning Subgroup of the Boise District Resource Advisory Council (RAC), will meet as indicated below.

DATES: The meeting will be held July 12, 2006, beginning at 6 p.m. and ending at 9 p.m. at the Offices of the Boise District BLM, located at 3948 Development Avenue, in Boise, Idaho 83705. Public comments on the discussion topics are welcomed after the Subgroup discussions are concluded.

FOR FURTHER INFORMATION CONTACT: MJ Byrne, Public Affairs Officer and RAC Coordinator, BLM Boise District, 3948 Development Ave., Boise, ID 83705, Telephone (208) 384–3393.

SUPPLEMENTARY INFORMATION: The 15-member Council advises the Secretary of the Interior, through the BLM, on a variety of planning and management issues associated with public land management in southwestern Idaho. The purpose of the RMP Subgroup meeting will be to receive a presentation on the preliminary drafts of chapters 2 and 3 of the Bruneau Resource Management Planning (RMP) document. BLM managers will review changes to the alternatives with the RAC Members, and comments received related to the Bruneau RMP. This urgent meeting is being called in order to receive comments from the RAC Subgroup on the proposed alternatives, and to meet the target date for completion of the Bruneau Draft RMP.

This and all RAC meetings are open to the public. The public may present written comments to the Council. Depending on the number of persons wishing to comment and time available, the time for individual oral comments may be limited. Individuals who plan to attend and need special assistance, such as sign language interpretation, tour transportation or other reasonable accommodations, should contact the BLM Coordinator as provided above. Expedited publication is requested to give the public adequate notice.

Dated: June 23, 2006.

Jerry L. Taylor,

District Manager.

[FR Doc. 06–5787 Filed 6–27–06; 8:45 am]

BILLING CODE 4310–DW–P

DEPARTMENT OF THE INTERIOR

Minerals Management Service

Agency Information Collection Activities: Submitted for Office of Management and Budget (OMB) Review; Comment Request

AGENCY: Minerals Management Service (MMS), Interior.

ACTION: Notice of extension of an information collection (1010–0048).

SUMMARY: To comply with the Paperwork Reduction Act of 1995 (PRA), we are notifying the public that we have submitted to OMB an information collection request (ICR) to renew approval of the paperwork requirements in the regulations under ''30 CFR Part 251, Geological and Geophysical (G&G) Explorations of the OCS,'' and related documents. This notice also provides the public a second opportunity to comment on the paperwork burden of these regulatory requirements.

DATES: Submit written comments by July 28, 2006.

ADDRESSES: You may submit comments on this information collection directly to the Office of Management and Budget (OMB), Office of Information and Regulatory Affairs, OMB, Attention: Desk Officer for the Department of the Interior via OMB e-mail:

(*OIRA_DOCKET@omb.eop.gov*); or by fax (202) 395–6566; identify with (1010–0048).

Submit a copy of your comments to the Department of the Interior, MMS, via:

- MMS's Public Connect on-line commenting system, *https://ocsconnect.mms.gov*. Follow the instructions on the website for submitting comments.
- Email MMS at *rules.comments@mms.gov*. Use Information Collection Number 1010–0048 in the subject line.
- Fax: 703–787–1093. Identify with Information Collection Number 1010–0048.
- Mail or hand-carry comments to the Department of the Interior; Minerals Management Service; Attention: Rules Processing Team (RPT); 381 Elden Street, MS–4024; Herndon, Virginia 20170–4817. Please reference ''Information Collection 1010–0048'' in your comments.

FOR FURTHER INFORMATION CONTACT: Cheryl Blundon, Rules Processing Team, (703) 787–1600. You may also contact Cheryl Blundon to obtain a copy, at no cost, of the regulations and forms that require the subject collection of information.

SUPPLEMENTARY INFORMATION:

Title: 30 CFR Part 251, Geological and Geophysical (G&G) Explorations of the OCS.

Forms: MMS–327, MMS–328, and MMS–329.

OMB Control Number: 1010–0048.

Abstract: The Outer Continental Shelf (OCS) Lands Act, as amended (43 U.S.C. 1331 *et seq.* and 43 U.S.C. 1801 *et seq.*), authorizes the Secretary of the Interior (Secretary) to prescribe rules and regulations to administer leasing of the OCS. Such rules and regulations will apply to all operations conducted under a lease. Operations on the OCS must preserve, protect, and develop oil and natural gas resources in a manner that is consistent with the need to make such resources available to meet the Nation's energy needs as rapidly as possible; to balance orderly energy resource development with protection of human, marine, and coastal environments; to ensure the public a fair and equitable return on the resources of the OCS; and to preserve and maintain free enterprise competition.

The OCS Lands Act (43 U.S.C. 1340) also states that ''any person authorized by the Secretary may conduct geological and geophysical explorations in the [O]uter Continental Shelf, which do not interfere with or endanger actual operations under any lease maintained or granted pursuant to this OCS Lands Act, and which are not unduly harmful to aquatic life in such area.'' The section further requires that permits to conduct such activities may only be issued if it is determined that the applicant is qualified; the activities are not polluting, hazardous, or unsafe; they do not interfere with other users of the area; and do not disturb a site, structure, or object of historical or archaeological significance. Applicants for permits are required to submit form MMS–327 to provide the information necessary to evaluate their qualifications. Upon approval, respondents are issued a permit on either form MMS–328 or MMS–329 depending on whether the permit is for geophysical exploration or for geological exploration.

Regulations at 30 CFR part 251 implement these statutory requirements. We use the information to ensure there is no environmental degradation, personal harm or unsafe operations and conditions, damage to historical or archaeological sites, or interference with other uses; to analyze and evaluate preliminary or planned drilling activities; to monitor progress and activities in the OCS; to acquire G&G data and information collected under a Federal permit offshore; and to determine eligibility for reimbursement from the Government for certain costs. The information is necessary to determine if the applicants for permits or filers of notices meet the qualifications specified by the OCS Lands Act. The MMS uses information collected to understand the G&G characteristics of oil- and gas-bearing physiographic regions of the OCS. It aids the Secretary in obtaining a proper balance among the potentials for environmental damage, the discovery of oil and gas, and adverse impacts on affected coastal States. Information from permittees is necessary to determine the propriety and amount of reimbursement.

We will protect information from respondents considered proprietary under the Freedom of Information Act (5 U.S.C. 552) and its implementing regulations (43 CFR part 2) and under regulations at 30 CFR parts 250, 251, and 252. No items of a sensitive nature are collected. Responses are mandatory or required to obtain or retain a benefit.

Frequency: On occasion; and as required in the permit.

Estimated Number and Description of Respondents: Approximately 130 OCS Federal oil, gas, and sulphur permittees and notice filers.

Estimated Reporting and Recordkeeping ''Hour'' Burden: The estimated annual ''hour'' burden for this information collection is a total of 1,586 hours. The following chart details the individual components and estimated hour burdens. In calculating the burdens, we assumed that respondents perform certain requirements in the normal course of their activities. We consider these to be usual and customary and took that into account in estimating the burden.

Citation 30 CFR 251	Reporting and recordkeeping requirement	Hour burden	Average No. annual responses	Annual burden hours
251.4(a), (b); 251.5(a), (b), (d); 251.6; 251.7.	Apply for permits (form MMS–327) to conduct G&G exploration, including deep stratigraphic tests/revisions when necessary.	6	110 Applications	660
251.4(b); 251.5(c), (d); 251.6	File notices to conduct scientific research activities, including notice to MMS prior to beginning and after concluding activities.	6	4 Notices	24
251.6(b); 251.7(b)(5)	Notify MMS if specific actions should occur; report archaeological resources. (No instances reported since 1982.).	1	1 Notice	1
251.7	Submit information on test drilling activities under a permit, including form MMS–123.	(1) Burden included under 1010–0141		0
251.7(c)	Enter into agreement for group participation in test drilling, including publishing summary statement; provide MMS copy of notice/list of participants. (No agreements submitted since 1989.).	1	1 Agreement	1

Citation 30 CFR 251	Reporting and recordkeeping requirement	Hour burden	Average No. annual responses	Annual burden hours
251.7(d)	Submit bond(s) on deep stratigraphic test	(1) Burden included under 30 CFR part 256 (1010–0006)		0
251.8(a)	Request reimbursement for certain costs associated with MMS inspections. (No requests in many years. OCS Lands Act requires Government reimbursement.).	1	1 Request	1
251.8(b), (c)	Submit modifications to, and status/final reports on, activities conducted under a permit.	2	55 Responses × 4 Reports = 220.	440
251.9(c)	Notify MMS to relinquish a permit	½	8 Notices	4
251.10(c)	File appeals	(1) Not subject to the PRA		0
251.11; 251.12	Notify MMS and submit G&G data/information collected under a permit and/or processed by permittees or 3rd parties, including reports, logs or charts, results, analyses, descriptions, etc.	4	50 Submissions	200
251.13	Request reimbursement for certain costs associated with reproducing data/information.	2	50 Submissions	100
251.14(a)	Submit comments on MMS intent to disclose data/info. to the public.	1	1 Comment	1
251.14(c)(2)	Submit comments on MMS intent to disclose data/info. to an independent contractor/agent.	1	1 Comment	1
251.14(c)(4)	Contractor/agent submits written commitment not to sell, trade, license, or disclose data/info. without MMS consent.	1	1 Commitment	1
251.1–251.14	General departure and alternative compliance requests not specifically covered elsewhere in part 251 regulations.	2	1 Request	2
Permit Form (Form MMS–327).	Request extension of permit time period	1	50 Extensions	50
Permit Form (Form MMS–327).	Retain G&G data/information for 10 years and make available to MMS upon request.	1	100 Recordkeepers	100
Total Hour Burden			599 Responses	1,586

Estimated Reporting and Recordkeeping ''Non-Hour Cost'' Burden: We have identified no paperwork ''non-hour cost'' burdens associated with the collection of information.

Public Disclosure Statement: The PRA (44 U.S.C. 3501, *et seq.*) provides that an agency may not conduct or sponsor a collection of information unless it displays a currently valid OMB control number. Until OMB approves a collection of information, you are not obligated to respond.

Comments: Section 3506(c)(2)(A) of the PRA (44 U.S.C. 3501, *et seq.*) requires each agency '' * * * to provide notice * * * and otherwise consult with members of the public and affected agencies concerning each proposed collection of information * * *'' Agencies must specifically solicit comments to: (a) Evaluate whether the proposed collection of information is necessary for the agency to perform its duties, including whether the information is useful; (b) evaluate the accuracy of the agency's estimate of the burden of the proposed collection of information; (c) enhance the quality, usefulness, and clarity of the information to be collected; and (d) minimize the burden on the respondents, including the use of automated collection techniques or other forms of information technology.

To comply with the public consultation process, on November 28, 2005, we published a **Federal Register** notice (70 FR 71329) announcing that we would submit this ICR to OMB for approval. The notice provided the required 60-day comment period. In addition, § 250.199 provides the OMB control number for the information collection requirements imposed by the 30 CFR 251 regulations and forms. The regulation also informs the public that they may comment at any time on the collections of information and provides the address to which they should send comments. We have received no comments in response to these efforts.

If you wish to comment in response to this notice, you may send your comments to the offices listed under the **ADDRESSES** section of this notice. OMB has up to 60 days to approve or disapprove the information collection but may respond after 30 days. Therefore, to ensure maximum consideration, OMB should receive public comments by July 28, 2006.

Public Comment Procedures: MMS's practice is to make comments, including names and addresses of respondents, available for public review. If you wish your name and/or address to be withheld, you must state this prominently at the beginning of your comment. MMS will honor the request to the extent allowable by the law; however, anonymous comments will not be considered. All submissions from organizations or businesses, and from individuals identifying themselves as representatives or officials of organizations or businesses, will be made available for public inspection in their entirety.

MMS Information Collection Clearance Officer: Arlene Bajusz (202) 208–7744.

Editorial Note: This document was received at the Office of the Federal Register on June 23, 2006.

Dated: February 7, 2006.

E.P. Danenberger,

Chief, Office of Offshore Regulatory Programs.

[FR Doc. E6–10192 Filed 6–27–06; 8:45 am]

BILLING CODE 4310–MR–P

DEPARTMENT OF JUSTICE

Notice of Lodging Proposed Consent Decree

In accordance with Departmental Policy, 28 CFR 50.7, notice is hereby given that a proposed Consent Decree in *United States* v. *Bay-Houston Towing*

Co., Civil Action No. 98–CV–73252 (E.D. Mich.), was lodged with the United States District Court for the Eastern District of Michigan on June 22, 2006.

This proposed Consent Decree concerns a complaint filed by the United States against Bay-Houston Towing Co. (''Bay-Houston''), pursuant to sections 301(a), 309(b), 309(d), and 404 of the Clean Water Act (''CWA''), 33 U.S.C. 1319(b), 1319(d), and 1344, to obtain injunctive relief from and impose civil penalties against the Defendant for violating the Clean Water Act by discharging pollutants without a permit into waters of the United States, at a location known as the ''Minden Bog,'' in Sanilac County, Michigan, and for failing to comply with an administrative compliance order issued to Bay-Houston by the United States Environmental Protection Agency. The proposed Consent Decree resolves these allegations by permanently enjoining Bay-Houston from discharging pollutants at the Minden Bog except in accordance with CWA section 404 permit recently tendered to Bay-Houston by the United States Army Corps of Engineers (''Corps''). The permit also requires Bay-Houston, *inter alia,* to restore the majority of the bog affected by peat mining; to immediately donate 1,182 acres of presently undisturbed peatlands to the Michigan Department of Natural Resources (''MDNR''); and to donate remaining peatlands (approximately 1,641 acres) to the MDNR once peat mining is complete.

The Department of Justice will accept written comments relating to this proposed Consent Decree for thirty (30) days from the date of publication of this Notice. Please address comments to Joshua M. Levin, Senior Attorney, U.S. Department of Justice, Environment and Natural Resources Division, Environmental Defense Section, P.O. Box 23986, Washington, DC 20026–3986, and refer to *United States* v. *Bay-Houston Towing Co.,* DJ #95–5–1–1–4519.

The proposed Consent Decree may be examined at the Clerk's Office, United States District Court for the Eastern District of Michigan, at the following address: 5th Floor, Theodore Levin United States Courthouse, 231 West Lafayette Boulevard, Detroit, MI 48226. In addition, the proposed Consent Decree may be viewed at *http://www.usdoj.gov/enrd/open.html.*

Scott A. Schachter,

Assistant Chief, Environmental Defense Section, Environment and Natural Resources Division.

[FR Doc. 06–5764 Filed 6–27–06; 8:45 am]

BILLING CODE 4410–15–M

DEPARTMENT OF JUSTICE

Notice of Lodging of Consent Decree Pursuant to the Comprehensive Environmental Response, Compensation, and Liability Act

In accordance with Departmental policy, 28 CFR 50.7, notice is hereby given that a proposed consent decree in *United States* v. *The Gillette Company*, Civil Action No. C06–1016, was lodged on June 8, 2006 with the United States District Court for the Northern District of Iowa. This consent decree requires the defendants to pay EPA Hazardous Substance Superfund $750,000 in reimbursement of past response costs.

The Department of Justice will receive, for a period of thirty (30) days from the date of this publication, comments relating to the proposed consent decree. Comments should be addressed to the Assistant Attorney General, Environmental and Natural Resources Division, P.O. Box 7611, U.S. Department of Justice, Washington, DC 20044–7611, and should refer to *United States* v. *The Gillette Company*, DOJ Ref. 90–11–2–08217.

The proposed consent decree may be examined at the office of the United States Attorney, 401 1st Street SE., Suite 400, Cedar Rapids, IA 52401–4950 and at U.S. EPA Region 7, 901 N. 5th Street, Kansas City, KS 66101. During the comment period, the consent decree may be examined on the following Department of Justice Web site, *http://www.usdoj.gov/enrd/open.html.* Copies of the consent decree also may be obtained by mail from the Consent Decree Library, P.O. Box 7611, U.S. Department of Justice, Washington, DC 20044–7611 or by faxing or e-mailing a request to Tonia Fleetwood (*tonia.fleetwood@usdoj.gov*), fax no. (202) 514–0097, phone confirmation number (202) 514–1547. In requesting a copy, please enclose a check in the amount of $3.75 (without attachment) or $6.25 (with attachments) for *United States* v. *The Gillette Company*, (25 cents per page reproduction cost) payable to the U.S. Treasury.

Robert E. Maher, Jr.,

Assistant Section Chief, Environmental Enforcement Section.

[FR Doc. 06–5770 Filed 6–27–06; 8:45 am]

BILLING CODE 4410–15–M

DEPARTMENT OF JUSTICE

Notice of Lodging of Consent Decree Between the United States of America and Donald Boatright Under CERCLA

Under 28 CFR 50.7, notice is hereby given that on June 6, 2006, a proposed Consent Decree (''Consent Decree'') with Defendant Donald Boatright in *United States* v. *Donald E. Horne, et al.,* Civil Action No. 05–497, has been lodged with the United States District Court for the Western District of Missouri.

This Consent Decree resolves the United States' pending claims against Donald Boatright under section 107 of CERCLA 42 U.S.C. 9607 at the Armour Road Superfund Site in North Kansas City, Missouri. Under the terms of that decree, Mr. Boatright shall pay to the United States $175,000.

The Department of Justice will receive for a period of thirty (30) days from the date of this publication comments relating to the Consent Decree. Comments should be addressed to the Assistant Attorney General, Environment and Natural Resources Division, P.O. Box 7611, U.S. Department of Justice, Washington, DC 20044–7611, and should refer to *United States* v. *Donald E. Horne, et al.,* Civil Action No. 05–497, D.J. Ref. 90–11–3–08035/1.

The Consent Decree may be examined at the Office of the United States Attorney, Western District of Missouri, Charles Evans Whittaker Courthouse, 400 East Ninth Street, Room 5510, Kansas City, Missouri 64106. During the public comment period, the Consent Decree may be examined on the following Department of Justice Web site: *http://www.usdoj.gov/enrd/open.html.* A copy of the Consent Decree may also be obtained by mail from the Consent Decree Library, P.O. Box 7611, U.S. Department of Justice, Washington, DC 20044–7611, or by faxing or e-mailing a request to Tonia Fleetwood (*tonia.fleetwood@usdoj.gov*), fax no. (202) 514–0097, phone confirmation number (202) 514–1547. In requesting a copy from the Consent Decree Library, please enclose a check in the amount of $4.50 (25 cents per

page reproduction cost) payable to the United States Treasury for payment.

Robert Maher,

Assistant Section Chief, Environmental Enforcement Section, Environment and Natural Resources Division.

[FR Doc. 06–5766 Filed 6–27–06; 8:45 am]

BILLING CODE 4410–15–M

DEPARTMENT OF JUSTICE

Notice of Lodging of Consent Decree Under the Comprehensive Environmental Response, Compensation, and Liability Act

The United States Department of Justice is re-issuing this notice because of a typographical error in the original notice, which was published on June 7, 2006 (71 FR 33001). The original notice mis-stated the amount to be paid by PPG Industries, Inc. under one of the two proposed consent decrees. *This republication does not alter the public comment period, which remains a thirty-day period beginning June 7, 2006.*

Under 42 U.S.C. 9622(d)(2), 9622(g)(12) and 28 CFR 50.7, notice is hereby given that on May 26, 2006, two proposed Consent Decrees in *United States* v. *Industrial Excess Landfill, Inc.,* Civil Action Number 5:89–CV–1988 (consolidated with *State of Ohio* v. *Industrial Excess Landfill, Inc.,* Civil Action Number 5:91–CV–2559), were lodged with the United States District Court for the Northern District of Ohio.

The first Consent Decree resolves claims against PPG Industries, Inc. (''PPG''), brought by the United States on behalf of the Environmental Protection Agency (''EPA'') under section 107 of the Comprehensive Environmental Response, Compensation, and Liability Act (''CERCLA''), 42 U.S.C. 9607, for response costs incurred and to be incurred by the United States in responding to the release and threatened release of hazardous substances at the Industrial Excess Landfill Superfund Site (''Site'') in Uniontown, Ohio. Under its Consent Decree, PPG will pay the United States $752,500 in reimbursement of response costs.

The second Consent Decree resolves claims against Morgan Adhesives Co. (''Morgan''), brought by the United States on behalf of the Environmental Protection Agency under section 107 of CERCLA, 42 U.S.C. 9607, for response costs incurred and to be incurred by the United States in responding to the release and threatened release of hazardous substances at the Site, as well as CERCLA and other claims related to the Site brought against Morgan by the State of Ohio. Under its Consent Decree, Morgan will pay the United States $334,016 in reimbursement of response costs and will pay the State of Ohio $15,984 in reimbursement of response costs.

Both Consent Decrees are *de minimis* settlements pursuant to section 122(g)(1)(A) of CERCLA, 42 U.S.C. 9622(g)(1)(A). Under the respective Consent Decree, the United States covenants not to sue PPG, and the United States and the State of Ohio covenant not to sue Morgan, regarding the Site, subject to reservations of rights should information be discovered which indicates that a settling defendant no longer qualifies as a *de minimis* party, as well as reservations commonly included in CERCLA settlements of all rights with respect to certain other claims.

The Department of Justice will receive, for a period of thirty (30) days from the date of this publication, comments relating to the Consent Decree. Comments should be addressed to the Assistant Attorney General, Environment and Natural Resources Division, P.O. Box 7611, U.S. Department of Justice, Washington, DC 20044–7611, and should refer to *United States* v. *Industrial Excess Landfill, Inc.,* DOJ Ref. #90–11–3–247/2.

Each Consent Decree may be examined at the Office of the United States Attorney, Northern District of Ohio, 801 West Superior Avenue, Suite 400, Cleveland, Ohio 44113, and the Region 5 Office of the Environmental Protection Agency, 77 W. Jackson Blvd., Chicago, Illinois 60604. During the public comment period, each Consent Decree may also be examined on the following Department of Justice Web site: *http://www.usdoj.gov/enrd/open.html.*

A copy of each Consent Decree may also be obtained by mail from the Consent Decree Library, P.O. Box 7611, U.S. Department of Justice, Washington, DC 20044–7611, or by faxing or e-mailing a request to Tonia Fleetwood, *tonia.fleetwood@usdoj.gov,* Fax No. (202) 514–0097, phone confirmation number (202) 514–1547. In requesting a copy from the Consent Decree library, please specify whether requesting the PPG Consent Decree, the Morgan Consent Decree, or both, and please enclose a check payable to the U.S. Treasury in the amount of $5.50 for the PPG Consent Decree, $6.25 for the Morgan Consent Decree, or $11.75 for both Consent Decrees (for reproduction costs of 25 cents per page).

William D. Brighton,

Assistant Section Chief, Environmental Enforcement Section, Environment and Natural Resources Division.

[FR Doc. 06–5769 Filed 6–27–06; 8:45 am]

BILLING CODE 4410–15–M

DEPARTMENT OF JUSTICE

Notice of Lodging of Stipulation of Settlement and Judgment under the Resource Conservation and Recovery Act, Clean Air Act, Clean Water Act, and the Comprehensive Environmental Response, Compensation, and Liability Act

Under 28 CFR 50.7, notice is hereby given that on June 6, 2006, a proposed Stipulation of Settlement and Judgment in *United States et al.,* v. *Marine Shale Processors, Inc., et al.*, Civil Action No. 90–1240 was lodged with the United States District Court for the Western District of Louisiana.

In this action the United States and the Louisiana Department of Environmental Quality (''LDEQ'') sought civil penalties and injunctive relief under section 3008(a) of the Resource Conservation and Recovery Act (''RCRA''); civil penalties under section 113(b) of the Clean Air Act and section 309(b) of the Clean Water Act; and reimbursement for response costs incurred or to be incurred under section 107 of the Comprehensive Environmental Response, Compensation, and Liability Act (''CERCLA'') regarding contaminated facilities owned and operated by Marine Shale Processors, Inc. (''Marine Shale'') and Recycling Park Inc. (''Recycling Park'') located in Amelia, Louisiana. 33 U.S.C. 1319(b), 42 U.S.C. 6928(a), 7413(b), 9607.

Under the proposed Stipulation of Settlement and Judgment, the Court will center a $6.2 million judgment for penalties, in favor of the United States and LDEQ, against Marine Shale and Recycling Park. A separate $6.2 million in proceeds from Marine Shale will be transferred to LDEQ for the closure and remediation of the contamination at the Marine Shale and Recycling Park facilities. An additional $850,000 letter of credit posted by Marine Shale will also be transferred to LDEQ and used for the cleanup of the Marine Shale and Recycling Park facilities. In addition, Marine Shale, Recycling Park, and John Kent, Sr., the owner of the two companies, are prohibited from owning or controlling a majority interest in or participating in the management of any

business involved in waste management or recycling. The three parties are also required to provide access as required for investigation, closure and remediation at the Marine Shale and Recycling Park facilities and agree to a number of institutional controls and deed restrictions necessary to assure the implementation and effectiveness of the remedial actions to be taken at the facilities. After EPA LDEQ certify that the cleanups at the Marine Shale and Recycling Park facilities have been completed, the governments have the option of receiving the proceeds from the sale of the properties to satisfy the civil penalty judgment. The Department of Justice will receive for a period of thirty (30) days from the date of this publication comments relating to the Stipulation of Settlement and Judgment. Comments should be addressed to the Assistant Attorney General, Environment and Natural Resources Division, P.O. Box 7611, U.S. Department of Justice, Washington, DC 20044–7611, and should refer to *United States* v. *Marine Shale Processors, et al.*, D.J. Ref. No. 90–11–2–204. A public hearing will be held regarding the proposed settlement at 7 p.m. on July 19, 2006, at the Morgan City Municipal Auditorium, 705 Myrtle Street, Morgan City, Louisiana.

The Stipulation of Settlement and Judgment may be examined during the public comment period on the following Department of Justice Web site: *http://www.usdoj.gov/enrd/open.html.* A copy of the Stipulation of Settlement and Judgment may also be obtained by mail from the Consent Decree Library, P.O. Box 7611, U.S. Department of Justice, Washington, DC 20044–7611 or by faxing or e-mailing a request to Tonia Fleetwood (*tonia.fleetwood@usdoj.gov*), fax no. (202) 514–0097, phone confirmation number (202) 514–1547. In requesting a copy from the Consent Decree Library, please enclose a check in the amount of $32.75 (25 cents per page reproduction cost) payable to the U.S. Treasury.

Thomas A. Mariani, Jr.,

Assistant Section Chief, Environmental Enforcement Section, Environment and Natural Resources Division.

[FR Doc. 06–5768 Filed 6–27–06; 8:45 am]

BILLING CODE 4410–15–M

DEPARTMENT OF JUSTICE

Notice of Lodging of Two Consent Decrees Under the Comprehensive Environmental Response, Compensation and Liability Act of 1980

Consistent with 28 CFR 50.7 and 42 U.S.C. 9622(d), notice is hereby given that on June 13, 2006, two proposed consent decrees in *United States* v. *Olin Corporation, et al.,* Civil Action No. 3:06CV914 (SRU), were lodged with the United States District Court for the District of Connecticut.

In this action, the United States seeks recovery of costs pursuant to section 107(a) of the Comprehensive Environmental Response, Compensation and Liability Act of 1980, as amended, 42 U.S.C. 9607(a), related to the Rosem Superfund Removal Site and the Bryden & Morse Superfund Removal Site. The first proposed consent decree, between the United States, the South Central Connecticut Regional Water Authority, the Town of Hamden, Connecticut, and the State of Connecticut Board of Education (''Decree''), recovers $140,000. The second proposed consent decree, between the United States and Olin Corporation (''Olin Decree''), recovers $110,000.

The Department of Justice will receive for a period of thirty (30) days from the date of this publication comments relating to the Decree and the Olin Decree. Comments should be addressed to the Assistant Attorney General, Environment and Natural Resources Division, P.O. Box 7611, Ben Franklin Station, U.S. Department of Justice, Washington, DC 20044–7611, and should refer to *United States* v. *Olin Corporation, et al.,* D.J. Ref. 90–11–3–08075.

The Decree and Olin Decree may be examined at the Office of the United States Attorney, 450 Main Street, Room 328, Hartford, Connecticut 06103, and at the U.S. Environmental Protection Agency—Region 1, JFK Federal Building, Boston, MA 02203–2211. During the public comment period, the Decree and Olin Decree may also be examined on the following Department of Justice Web site, *http://www.usdoj.gov/enrd/open.html.* A copy of the Decree and Olin Decree may also be obtained by mail from the Consent Decree Library, P.O. Box 7611, Ben Franklin Station, U.S. Department of Justice, Washington, DC 20044–7611 or by faxing or e-mailing a request to Tonia Fleetwood (*tonia.fleetwood@usdoj.gov*), fax no. (202) 514–0097, phone confirmation number (202) 514–1547. In requesting a copy from the Consent Decree Library, please enclose a check in the amount of $15.75 (25 cents per page reproduction cost) payable to the U.S. Treasury.

Ronald Gluck,

Assistant Chief, Environmental Enforcement Section, Environment and Natural Resources Division.

[FR Doc. 06–5771 Filed 6–27–06; 8:45 am]

BILLING CODE 4410–15–M

DEPARTMENT OF JUSTICE

Notice of Lodging of Consent Decree Under the Clean Air Act

Under 28 CFR 50.7, notice is hereby given that on June 21, 2006, a proposed Consent Decree in *United States* v. *S.D. Warren Company d/b/a/ Sappi Fine Paper North America*, Civil Action No. 1:06–CV–437 (W.D. Mich.) was lodged with the United States District Court for the Western District of Michigan.

The Consent Decree addresses alleged violations of the Clean Air Act, 42 U.S.C. 7401–7671q, at a kraft pulp mill in Muskegon, Michigan that is owned and operated by S.D. Warren Company d/b/a/ Sappi Fine Paper North America (the ''Defendant''). More specifically, the United States alleges that the Defendant failed to comply with multiple Clean Air Act requirements applicable to the recovery furnace at the Muskegon Mill before the Defendant deactivated that recovery furnace in August 2005.

The proposed Consent Decree between the United States and the Defendant would require the Defendant to; (1) Pay a $586,106 civil penalty for alleged past violations of the Clean Air Act, (2) comply fully with Clean Air Act requirements applicable to the Muskegon Mill recovery furnace if the Defendant reactivates the recovery furnace; and (3) report to the U.S. Environmental, Protection Agency on the status of the recovery furnace.

The Department of Justice will receive comments relating to the Consent Decree for a period of thirty (30) days from the date of this publication. Comments should be addressed to the Assistant Attorney General, Environment and Natural Resources Division, P.O. Box 7611, U.S. Department of Justice, Washington, DC 20044–7611, and should refer to *United States* v. *S.D. Warren Company d/b/a Sappi Fine Paper North America*, Civil Action No. 1:06–CV–437 (W.D. Mich.) and D.J. Ref. No. 90–5–2–1–08442.

The Consent Decree may be examined at: (1) The offices of the United States Attorney, 330 Ionia Avenue, NW., Suite 501, Grand Rapids, Michigan (contact Michael Shiparski (616–456–2404)); and

(2) the offices of the U.S. Environmental Protection Agency, Region 5, 77 West Jackson Boulevard, 14th Floor, Chicago, Illinois (contact Cynthia King (312–886–6831)). During the public comment period, the Consent Decree may also be examined on the following Department of Justice Web site, *http://www.usdoj.gov/enrd/open.html.* A copy of the Consent Decree may also be obtained by mail from the Consent Decree Library, P.O. Box 7611, U.S. Department of Justice, Washington, DC 20044–7611 or by faxing or e-mailing a request to Tonia Fleetwood (*tonia.fleetwood@usdoj.gov*), fax no. 202–514–0097, phone confirmation number 202–514–1547. In requesting a copy from the Consent Decree Library, please enclose a check in the amount of $5.50 (22 pages at 25 cents per page reproduction cost) payable to the U.S. Treasury.

William D. Brighton,

Assistant Chief, Environmental Enforcement Section, Environment and Natural Resources Division.

[FR Doc. 06–5765 Filed 6–27–06; 8:45 am]

BILLING CODE 4410–15–M

DEPARTMENT OF JUSTICE

Notice of Lodging of Consent Decree under the Comprehensive Environmental Response, Compensation, and Liability Act

Under 28 CFR 50.7, notice is hereby given that on June 6, 2006, a proposed Consent Decree in *United States et al.* v. *Southern Wood Piedmont Company et al.,* Civil Action No. 90–1240 was lodged with the United States District Court for the Western District of Louisiana.

In this action the United States sought reimbursement for response costs incurred or to be incurred under section 107 of CERCLA, 42 U.S.C. 9607, regarding contaminated facilities owned by Marine Shale Processes, Inc. (''Marine Shale'') and Recycling Park Inc. (''Recycling Park'') located in Amelia, Louisiana.

Under the proposed Consent Decree, Southern Wood Peidmont and its parent Rayonier, Inc. will perform a corrective action and cleanup estimated to cost $1.6 million at the Recycling Park facilities by placing a protective cap over the hazardous constituents in accordance with a work plan with approved by Environmental Protection Agency and the Louisiana Department of Environmental Quality. The two companies also will pay $200,000 toward the cleanup at the Marine Shale facility.

The Department of Justice will received for a period of thirty (30) days from the date of publication of this Consent Decree. Comments should be addressed to the Assistant Attorney General, Environment and Natural Resource Division, P.O. Box 7611, Washington, DC 20044–7611, and should refer to *United States* v. *Southern Wood Piedmont Company, et al.,* DJ #95–11–2–204. A public hearing will be held regarding the proposed settlement at 7 p.m. on July 19, 2006, at the Morgan City Municipal Auditorium, 705 Myrtle Street, Morgan City, Louisiana.

The Consent Decree may be examined during the public comment period on the following Department of Justice Web site: *http://www.usdoj.gov/enrd/open.html.* A copy of the Consent Decree may also be obtained by mail from the Consent Decree Library, P.O. Box 7611, U.S. Department of Justice, Washington, DC 20044–7611 or by faxing or e-mailing a request to Tonia Fleetwood (*tonia.fleetwood@usdoj.gov*), fax no. (202) 514–0097, phone confirmation number (202) 514–1547. In requesting a copy from the Consent Decree Library, please enclose a check in the amount of $10.00 (25 cents per page reproduction cost) payable to the U.S. Treasury.

Thomas A. Mariani, Jr.,

Assistant Section Chief, Environmental Defense Section, Environment and Natural Resources Division.

[FR Doc. 06–5767 Filed 6–27–06; 8:45 am]

BILLING CODE 4410–15–M

DEPARTMENT OF JUSTICE

Antitrust Division

Notice Pursuant to the National Cooperative Research and Production Act of 1993—Appliance Research Corporation (Formerly Known as Appliance Research Consortium, Inc.)

Notice is hereby given that, on May 24, 2006, pursuant to section 6(a) of the National Cooperative Research and Production Act of 1993, 15 U.S.C. 4301 *et seq.* (''the Act''), Appliance Research Corporation (''the ARC'') has filed written notifications simultaneously with the Attorney General and the Federal Trade Commission disclosing changes in its membership and in its nature and objectives. The notifications were filed for the purpose of extending the Act's provisions limiting the recovery of antitrust plaintiffs to actual damages under specified circumstances. Specifically, The Association of Home Appliance Manufacturers, Washington, DC; GE Consumer & Industrial, Louisville, KY; Whirlpool Corporation, Benton Harbor, MI; Electrolux, Home Care Products NA, Peoria, IL; Marvel Industries, Div of Northland Corp.; Richmond, IN; Sub-Zero Freezer Company, Inc., Madison, WI; Sanyo E & E Corporation, San Diego, CA; W.C. Wood Company Limited, Guelph, Ontario, Canada; and Viking, Greenwood, MS have been added as parties to this venture.

The purpose of the ARC is to conduct research to promote the general welfare of the home appliance industry, and specifically to evaluate environmentally preferable alternatives to ozone depleting substances.

No other changes have been made in either the membership or planned activity of the group research project. Membership in this group research project remains open, and the ARC intends to file additional written notification disclosing all changes in membership.

On September 19, 1989, the ARC filed its original notification pursuant to section 6(a) of the Act. The Department of Justice published a notice in the **Federal Register** pursuant to section 6(b) of the Act on November 1, 1989 (54 FR 46136).

The last notification was filed with the Department on March 9, 2001. A notice was published in the **Federal Register** pursuant to section 6(b) of the Act on April 9, 2001 (66 FR 18512).

Dorothy B. Fountain,

Deputy Director of Operations, Antitrust Division.

[FR Doc. 06–5735 Filed 6–27–06; 8:45 am]

BILLING CODE 4410–11–M

DEPARTMENT OF JUSTICE

Antitrust Division

Notice Pursuant to the National Cooperative Research and Production Act of 1993—Interactive Advertising Bureau

Notice is hereby given that, on June 1, 2006, pursuant to section 6(a) of the National Cooperative Research and Production Act of 1993, 15 U.S.C. 4301 et seq. (''the Act''), Interactive Advertising Bureau (''IAB'') has filed written notifications simultaneously with the Attorney General and the Federal Trade Commission disclosing additions or changes to its standards development activities. The notifications were filed for the purpose of extending the Act's provisions limiting the recovery of antitrust plaintiffs to actual damages under

specified circumstances. Specifically, IAB has recently completed the development of standards for Broadband Video Commercial Measurement Guidelines and Lead Generation Best Practices, and is currently developing standards for Rich Media Measurement Guidelines.

On September 17, 2004, IAB filed its original notification pursuant to section 6(a) of the Act. The Department of Justice published a notice in the **Federal Register** pursuant to section 6(b) of the Act on October 21, 2004 (69 FR 61868).

The last notification was filed with the Department on December 29, 2005. A notice was published in the **Federal Register** pursuant to section 6(b) of the Act on January 30, 2006 (71 FR 4935).

Dorothy B. Fountain,

Deputy Director of Operations, Antitrust Division.

[FR Doc. 06–5737 Filed 6–27–06; 8:45 am]

BILLING CODE 4410–11–M

DEPARTMENT OF JUSTICE

Antitrust Division

Notice Pursuant to the National Cooperative Research and Production Act of 1993—Southwest Research Institute: Cooperative Research Group on High Efficiency Durable Gasoline Engine

Notice is hereby given that, on May 16, 2006, pursuant to section 6(a) of the National Cooperative Research and Production Act of 1993, 15 U.S.C. 4301 *et seq.* (''the Act''), Southwest Research Institute: Cooperative Research Group on High Efficiency Durable Gasoline Engine (''Hedge'') has filed written notifications simultaneously with the Attorney General and the Federal Trade Commission disclosing changes in its membership. The notifications were filed for the purpose of extending the Act's provisions limiting the recovery of antitrust plaintiffs to actual damages under specified circumstances. Specifically, Honeywell International, Inc., Torrance, CA; and Ivenco Motorenforschung AG, Arbon, SWITZERLAND have been added as parties to this venture.

No other changes have been made in either the membership or planned activity of the group research project. Membership in this group research project remains open, and HEDGE intends to file additional written notification disclosing all changes in membership.

On June 10, 2005, HEDGE filed its original notification pursuant to section 6(a) of the Act. The Department of Justice published a notice in the **Federal Register** pursuant to section 6(b) of the Act on July 7, 2005 (70 FR 39339).

The last notification was filed with the Department on August 10, 2005. A notice was published in the **Federal Register** pursuant to section 6(b) of the Act on September 22, 2005 (70 FR 55629).

Dorothy B. Fountain,

Deputy Director of Operations, Antitrust Division.

[FR Doc. 06–5736 Filed 6–27–06; 8:45 am]

BILLING CODE 4410–11–M

DEPARTMENT OF JUSTICE

Executive Office for Immigration Review

Agency Information Collection Activities: Proposed Collection; Comments Requested

ACTION: 30-day notice of information collection under review: Notice of Appeal to the Board of Immigration Appeals from a Decision of a USCIS Officer.

The Department of Justice (DOJ), Executive Office for Immigration Review (EOIR) has submitted the following information collection request to the Office of Management and Budget (OMB) for review and approval in accordance with the Paperwork Reduction Act of 1995. The proposed information collection is published to obtain comments from the public and affected agencies. This proposed information collection was previously published in the **Federal Register** Volume 71, Number 19, page 4935 on January, 30, 2006, allowing for a 60 day comment period.

The purpose of this notice is to allow for an additional 30 days for public comment until July 28, 2006. This process is conducted in accordance with 5 CFR 1320.10.

Written comments and/or suggestions regarding the items contained in this notice, especially the estimated public burden and associated response time, should be directed to the Office of Management and Budget, Office of Information and Regulatory Affairs, Attention: Department of Justice Desk Officer, Washington, DC 20530. Additionally, comments may also be submitted to OMB via facsimile to (202) 395–5806. Written comments and suggestions from the public and affected agencies concerning the proposed collection of information are encouraged. Your comments should address one or more of the following four points:

—Evaluate whether the collection of information is necessary for the proper performance of the functions of the agency, including whether the information will have practical utility;

—Evaluate the accuracy of the agency's estimate of the burden of the proposed collection of information, including the validity of the methodology and assumptions used;

—Enhance the quality, utility, and clarity of the information to be collected; and

—Minimize the burden of the collection of information on those who are to respond, including through the use of appropriate automated, electronic, mechanical, or other technological collection techniques or other forms of information technology, e.g., permitting electronic submission of responses.

Overview of This Information Collection

(1) *Type of Information Collection:* Extension of a Currently Approved Collection.

(2) *Title of the Form/Collection:* Notice of Appeal to the Board of Immigration Appeals from a Decision of a USCIS Officer.

(3) *Agency form number, if any, and the applicable component of the Department of Justice sponsoring the collection:* Form EOIR 29, Executive Office for Immigration Review, United States Department of Justice.

(4) *Affected public who will be asked or required to respond, as well as a brief abstract: Primary:* A party who appeals a decision of a USCIS officer to the Board of Immigration Appeals (Board). *Other:* None. Abstract: A party affected by a decision of a USCIS officer may appeal that decision to the Board, provided that the Board has jurisdiction pursuant to 8 CFR 1003.1(b). The party must complete the Form EOIR–29 and submit it to the USCIS office having administrative control over the record of proceeding in order to exercise its regulatory right to appeal.

(5) *An estimate of the total number of respondents and the amount of time estimated for an average respondent to respond/reply:* It is estimated that 2,971 respondents will complete the form annually with an average of thirty minutes per response.

(6) *An estimate of the total public burden (in hours) associated with the collection:* There are an estimated 1485.5 total burden hours associated with this collection annually.

If additional information is required, contact: Lynn Bryant, Department

Deputy Clearance Officer, United States Department of Justice, Justice Management Division, Policy and Planning Staff, Patrick Henry Building, Suite 1600, 601 D Street, NW., Washington, DC 20530.

Dated: June 21, 2006.

Lynn Bryant,

Department Clearance Officer, United States Department of Justice.

[FR Doc. E6–10139 Filed 6–27–06; 8:45 am]

BILLING CODE 4410–30–P

DEPARTMENT OF LABOR

Office of the Secretary

Submission for OMB Review: Comment Request

June 20, 2006.

The Department of Labor (DOL) has submitted the following public information collection requests (ICR) to the Office of Management and Budget (OMB) for review and approval in accordance with the Paperwork Reduction Act of 1995 (Pub. L. 104–13, 44 U.S.C. chapter 35). A copy of each ICR, with applicable supporting documentation, may be obtained by contacting Darrin King on 202–693–4129 (this is not a toll-free number) or e-mail: *king.darrin@dol.gov*.

Comments should be sent to Office of Information and Regulatory Affairs, Attn: OMB Desk Officer for the Mine Safety and Health Administration (MSHA), Office of Management and Budget, Room 10235, Washington, DC 20503, 202–395–7316 (this is not a toll-free number), within 30 days from the date of this publication in the **Federal Register**.

The OMB is particularly interested in comments which:

- Evaluate whether the proposed collection of information is necessary for the proper performance of the functions of the agency, including whether the information will have practical utility;
- Evaluate the accuracy of the agency's estimate of the burden of the proposed collection of information, including the validity of the methodology and assumptions used;
- Enhance the quality, utility, and clarity of the information to be collected; and
- Minimize the burden of the collection of information on those who are to respond, including through the use of appropriate automated, electronic, mechanical, or other technological collection techniques or other forms of information technology, e.g., permitting electronic submission of responses.

Agency: Mine Safety and Health Administration.

Type of Review: Extension of currently approved collection.

Title: Miner Operator Dust Cards.

OMB Number: 1219–0011.

Frequency: On occasion and bi-monthly.

Type of Response: Recordkeeping; Reporting; and Third party disclosure.

Affected Public: Business or other for-profit.

Number of Respondents: 950.

Estimated Number of Annual Responses: 41,100.

Average Response Time: Varies by task.

Estimated Annual Burden Hours: 32,875.

Total Annualized capital/startup costs: $0.

Total Annual Costs (operating/maintaining systems or purchasing services): $2,989,172.

Description: 30 CFR 70.201(c), 71.201(c), and 90.201(c), authorizes the District Manager to require the mine operator to submit the dates(s) when sampling will begin. Only a certified person is allowed to conduct the respirable dust sampling required by these parts.

Sections 70.202(b), 71.202(b), and 90.202(b), requires that the person must pass the MSHA examination on sampling of respirable coal mine dust.

Sections 70.220(a), 71.220(a), and 90.220(a), requires the operator to report status changes to MSHA in writing within 3 working days after the status change has occurred.

Sections 70.209, 71.209, and 90.209, requires persons who are certified by MSHA to take respirable dust samples to complete the dust data card that accompanies each sample being submitted for analysis.

Sections 71.300 and 90.300 require a coal mine operator to submit to MSHA for approval a written respirable dust control plan within 15 calendar days after the termination date of a citation for violation of the applicable dust standard.

Section 71.301(d) requires the respirable dust control plan to be posted on the mine bulletin board, however, 90.301(d) prohibits posting of the dust control plan for P–90 miners and, instead, requires a copy be provided to the affected P–90 miner.

Prolonged exposure to excessive amounts of respirable coal mine dust can cause respiratory problems, ranging from mild impairment of respiratory function to more severe diseases such as coal workers' pneumoconiosis (CWP) and silicosis. These diseases are debilitating, and in severe cases, disabling and fatal.

The information provided by the mine operator on the dust data card that accompanies each dust sample submitted to MSHA for processing; the reporting of when such samples will be taken when District Manager requests; and the reporting of any changes in operation status affecting sampling, is vital to effectively administer and assess the effectiveness of the operator sampling program. MSHA has used the information received from the current collection not only to determine which mine operators have fully complied with the sampling provisions stipulated in the regulations but also which failed to adequately protect miners from excessive dust concentrations and needed to take appropriate measures to improve the quality of the mine air that miners breathe. Also, once the dust samples submitted by coal mine operators are processed by MSHA, it uses the collected information for reporting the results of respirable dust samples to the appropriate mine operators under §§ 70.210(a), 71.210(a) and 90.210(a), so that the results can be posted on the mine bulletin board for viewing by all miners as required by §§ 70.210(b) and 71.210(c). These results enable the Agency to more effectively evaluate the effectiveness of the operator's dust control systems, to better identify which particular operators should be targeted for compliance assistance efforts, and to plan and undertake special health emphasis initiatives.

Mine operators whose samples exceed the applicable standard are either notified to submit additional samples (involving DA, DWP, or P–90 miner entity types only) or are cited for violating the applicable standard. As discussed earlier, once cited by MSHA, the operator must promptly take corrective action and then submit five abatement samples to demonstrate that dust levels have been reduced within the applicable standard.

Once a respirable dust control plan, submitted in accordance with either § 71.300 or 90.300, is approved by MSHA, its provisions must be employed and complied with on a continuous basis. Posting of the plan in accordance with § 71.301(d) allows the affected miners to acquaint themselves with the types and locations of dust control measures that are required to be employed and maintained. MSHA inspectors use the information provided in the plan to determine whether the operator is complying with all plan provisions, and to assess the plan's

continued effectiveness in maintaining compliance with the applicable standard.

Agency: Mine Safety and Health Administration.

Type of Review: Extension of currently approved collection.

Title: Underground Retorts.

OMB Number: 1219–0096.

Frequency: On occasion.

Type of Response: Reporting.

Affected Public: Business or other for-profit.

Number of Respondents: 1.

Estimated Number of Annual Responses: 1.

Average Response Time: 160 hours.

Estimated Annual Burden Hours: 160.

Total Annualized capital/startup costs: $0.

Total Annual Costs (operating/maintaining systems or purchasing services): $0.

Description: This regulation pertains to the safety requirements to be followed by the mine operators in the use of underground retorts to extract oil from shale by heat or fire. Prior to ignition of retorts, the mine operator must submit a written plan indicating the acceptable levels of combustible gases and oxygen; specifications and location of off-gas monitoring procedures and equipment; procedures for ignition of retorts and details of area monitoring and alarm systems for hazardous gases and actions to be taken to assure safety of miners.

Plans for operating retorts are required because the retort process involves the use of fire in an underground mine in which hazardous gases may be present. Approved retort plans are monitored by MSHA to ensure that combustible gases are kept at acceptable levels and do not expose the miners to explosive or other hazardous conditions.

Ira L. Mills,

Departmental Clearance Officer.

[FR Doc. E6–10177 Filed 6–27–06; 8:45 am]

BILLING CODE 4510–43–P

DEPARTMENT OF LABOR

Office of the Secretary

Submission for OMB Review: Comment Request

June 21, 2006.

The Department of Labor (DOL) has submitted the following public information collection request (ICR) to the Office of Management and Budget (OMB) for review and approval in accordance with the Paperwork Reduction Act of 1995 (Pub. L. 104–13, 44 U.S.C. chapter 35). A copy of this ICR, with applicable supporting documentation, may be obtained by contacting Ira Mills at the Department of Labor on 202–693–4122 (this is not a toll-free number) or E-Mail: *Mills.Ira@dol.gov.* This ICR can also be accessed online at *http://www.doleta.gov/OMBCN/OMBControlNumber.cfm.*

Comments should be sent to Office of Information and Regulatory Affairs, Attn: OMB Desk Officer for ETA, Office of Management and Budget, Room 10235, Washington, DC 20503, 202–395–7316 (this is not a toll free number), within 30 days from the date of this publication in the **Federal Register**.

The OMB is particularly interested in comments which:

- Evaluate whether the proposed collection of information is necessary for the proper performance of the functions of the agency, including whether the information will have practical utility;
- Evaluate the accuracy of the agency's estimate of the burden of the proposed collection of information, including the validity of the methodology and assumptions used;
- Enhance the quality, utility and clarity of the information to be collected; and
- Minimize the burden of the collection of information on those who are to respond, including through the use of appropriate automated, electronic, mechanical, or other technological collection techniques or other forms of information technology, *e.g.*, permitting electronic submission of responses.

Agency: Employment and Training Administration (ETA).

Type of Review: Extension of a currently approved collection.

Title: Unemployment Insurance Title XII Advances and Voluntary Repayment Process.

OMB Number: 1205–0199.

Frequency: On occasion.

Affected Public: State, local, or tribal government.

Type of Response: Reporting.

Number of Respondents: 7.

Annual Responses: 56.

Average Response Time: 1 hour.

Total Annual Burden Hours: 56.

Total Annualized Capital/Startup Costs: 0.

Total Annual Costs (operating/maintaining systems or purchasing services): 37.

Description: This information collection is necessary to continue the process of requesting advances and repaying advances through correspondence from Governors and the Secretary of Labor.

Ira L. Mills,

Departmental Clearance Officer/Team Leader.

[FR Doc. E6–10178 Filed 6–27–06; 8:45 am]

BILLING CODE 4510–30–P

NATIONAL SCIENCE FOUNDATION

Committee Management Renewals

The NSF management officials having responsibility for the advisory committees listed below have determined that renewing these groups for another two years is necessary and in the public interest in connection with the performance of duties imposed upon the Director, National Science Foundation (NSF), by 42 U.S.C. 1861 et seq. This determination follows consultation with the Committee Management Secretariat, General Services Administration.

CNo	Committee name
1173	Committee on Equal Opportunities in Science and Engineering.
13853	Advisory Committee for GPRA Performance Assessment.
1171	Advisory Committee for Social Behavioral and Economic Sciences.
9956	Business and Operations Advisory Committee.
1209	Proposal Review Panel for Polar Programs.
1185	Proposal Review Panel for Cyberinfrastructure.
1115	Advisory Committee for Computer and Information Science and Engineering.
1192	Proposal Review Panel for Computing & Communication Foundations.
1200	Proposal Review Panel for Information and Intelligent Systems.
1207	Proposal Review Panel for Computer and Network Systems.
57	Proposal Review Panel for Graduate Education.
59	Proposal Review Panel for Elementary Secondary & Informal Education.

CNo	Committee name
1198	Proposal Review Panel for Experimental Programs to Stimulate Competitive Research.
1199	Proposal Review Panel for Human Resource Development.
1210	Proposal Review Panel for Research Evaluation and Communication.
1214	Proposal Review Panel for Undergraduate Education.
173	Proposal Review Panel for Engineering Education and Centers.
1189	Proposal Review Panel for Bioengineering and Environmental Systems.
1190	Proposal Review Panel for Chemical and Transport Systems.
1194	Proposal Review Panel for Design and Manufacturing Innovation.
1196	Proposal Review Panel for Electrical and Communications Systems.
1205	Proposal Review Panel for Civil and Mechanical Systems.
66	Advisory Committee for Mathematical and Physical Sciences.
1186	Proposal Review Panel for Astronomical Sciences.
1191	Proposal Review Panel for Chemistry.
1203	Proposal Review Panel for Materials Research.
1204	Proposal Review Panel for Mathematical Sciences.
1208	Proposal Review Panel for Physics.

Effective date for renewal is June 30, 2006. For more information, please contact Susanne Bolton, NSF, at (703) 292–7488.

Dated: June 23, 2006.

Susanne Bolton,

Committee Management Officer.

[FR Doc. 06–5758 Filed 6–27–06; 8:45 am]

BILLING CODE 7555–01–M

NUCLEAR REGULATORY COMMISSION

[Docket Nos. 70–36, 70–1151]

Notice of Consideration of Request for Consent to Transfer of Materials Licenses Westinghouse Electric Company

AGENCY: Nuclear Regulatory Commission.

ACTION: Notice of consideration of request from Westinghouse Electric Company for consent to transfer of materials licenses.

FOR FURTHER INFORMATION CONTACT: Mary Adams, Senior Project Manager, Fuel Cycle Facilities Branch, Division of Fuel Cycle Safety and Safeguards, Office of Nuclear Material Safety and Safeguards, U.S. Nuclear Regulatory Commission, Washington, DC 20555. Telephone: (301) 415–7249; fax number: (301) 415–5955; e-mail: *mta@nrc.gov.*

SUPPLEMENTARY INFORMATION:

I. Introduction

The U.S. Nuclear Regulatory Commission (NRC) is considering approval of an application (the application) from Westinghouse Electric Company (Westinghouse), submitted on April 21, 2006, for consent to indirect change of control with respect to materials licenses, from its parent company British Nuclear Fuels PLC (BNFL) to Toshiba Corporation (Toshiba).

The filing and requested NRC consent is necessitated by the planned sale by BNFL of its entire interest in Westinghouse to Toshiba. The applicant described the transaction as follows: BNFL currently controls all interest in Westinghouse through its wholly owned holding company, BNFL USA Group, Inc. (BNFL USA). To accomplish the purchase of all of BNFL's interest in Westinghouse, Toshiba would form an intermediate holding company (NewCo), which would subsequently issue its shares to Toshiba and possibly other minority investors. Toshiba, however, would maintain ownership over a majority of shares in NewCo (51% or more of the membership interest). Once complete, BNFL will sell 100% of its shares of BNFL USA (and Westinghouse) to NewCo. Therefore, through its majority ownership of NewCo, and NewCo's entire ownership of Westinghouse, Toshiba would maintain indirect control of Westinghouse. The applicant stated that Toshiba would at all times maintain majority control of at least 51% of the membership interest in Westinghouse, and that no minority ownership would constitute a change of control of Westinghouse.

The application states that there would be no change to Westinghouse's operations, corporate structure, key operating personnel or licensed activities as a result of the transaction and the indirect change of control. Westinghouse would remain a U.S. company and would continue to be headquartered in Pittsburgh, PA. Westinghouse would continue to be the holder of the licenses, approvals, and certificates listed above after the closing of the transaction and the indirect change of control. Westinghouse will remain technically and financially qualified as the licensee and will continue to fulfill all responsibilities as the licensee. The application states that no amendments to the licenses, approvals, and certificates will be necessary in connection with this request for consent.

This license transfer, if approved, would affect Special Nuclear Material Licenses SNM–33 and SNM–1107. License SNM–33 authorizes Westinghouse to possess and use source, special nuclear, and byproduct material at its former fuel fabrication facility in Hematite, Missouri, for the purpose of decommissioning the facility. License SNM–1107 authorizes Westinghouse to possess and use source, special nuclear, and byproduct material at the Columbia Fuel Fabrication Facility in Columbia, South Carolina.

Pursuant to 10 CFR 70.36, no license granted under the regulations in Part 70 and no right to possess or utilize special nuclear material granted by any license issued pursuant to the regulations in Part 70 shall be transferred, assigned or in any manner disposed of, either voluntarily or involuntarily, directly or indirectly, through transfer of control of any license to any person unless the Commission shall, after securing full information, find that the transfer is in accordance with the provisions of the Atomic Energy Act of 1954, as amended (AEA), and shall give its consent in writing. The Commission will approve an application for the transfer of a license if the Commission determines that the proposed transferee is qualified to hold the license, and that the transfer is otherwise consistent with applicable provisions of law, regulations, and orders issued by the Commission pursuant thereto. An Environmental Assessment (EA) will not be performed because this action is categorically excluded from the requirement to perform an EA pursuant to 10 CFR 51.22(c)(21).

II. Further Information

Documents related to this action, including the application for amendment and supporting documentation, are available electronically at the NRC's Electronic Reading Room at *http://www.nrc.gov/reading-rm/adams.html.* From this site, you can access the NRC's Agencywide Document Access and Management System (ADAMS), which provides text and image files of NRC's public documents. The ADAMS accession number for the document related to this notice is ML061160195. If you do not have access to ADAMS or if there are problems in accessing the documents located in ADAMS, contact the NRC Public Document Room (PDR) Reference staff at 1–800–397–4209, 301–415–4737 or by e-mail to *pdr@nrc.gov.*

These documents may also be viewed electronically on the public computers located at the NRC's PDR, O 1 F21, One White Flint North, 11555 Rockville Pike, Rockville, MD 20852. The PDR reproduction contractor will copy documents for a fee.

Dated at Rockville, Maryland, this 21st day of June, 2006.

For the Nuclear Regulatory Commission.

Gary S. Janosko,

Chief, Fuel Cycle Facilities Branch, Division of Fuel Cycle Safety and Safeguards, Office of Nuclear Material Safety and Safeguards.

[FR Doc. E6–10194 Filed 6–27–06; 8:45 am]

BILLING CODE 7590–01–P

OVERSEAS PRIVATE INVESTMENT CORPORATION

July 6, 2006 Public Hearing

OPIC's Sunshine Act notice of its Public Hearing in Conjunction with each Board meeting was published in the **Federal Register** (Volume 71, Number 109, Page 33006) June 7, 2006. No requests were received to provide testimony or submit written statements for the record; therefore, OPIC's public hearing in conjunction with OPIC's July 13, 2006 Board of Directors meeting scheduled for 2 p.m. on July 6, 2006 has been cancelled.

FOR FURTHER INFORMATION CONTACT: Information on the hearing cancellation may be obtained from Connie M. Downs at (202) 336–8438, via facsimile at (202) 218–0136, or via e-mail at *cdown@opic.gov.*

Dated: June 26, 2006.

Connie M. Downs,

OPIC Corporate Secretary.

[FR Doc. 06–5813 Filed 6–26–06; 12:33 pm]

BILLING CODE 3210–01–M

SECURITIES AND EXCHANGE COMMISSION

[Release No. IC–27416; File No. 812–13180]

Cohen & Steers VIF Realty Fund, Inc. et al.; Notice of Application

June 22, 2006.

AGENCY: Securities and Exchange Commission (''SEC'' or the ''Commission'').

ACTION: Notice of Application for Exemption pursuant to Section 6(c) of the Investment Company Act of 1940, as amended (the ''1940 Act''), for an exemption from the provisions of Sections 9(a), 13(a), 15(a) and 15(b) of the Act and Rules 6e–2(b)(15) and 6e–3(T)(b)(15) thereunder.

APPLICANTS: Cohen & Steers VIF Realty Fund, Inc. (the ''Fund'') and Cohen & Steers Capital Management, Inc. (the ''Investment Adviser'') (collectively the ''Applicants'').

SUMMARY OF APPLICATION: Applicants request an order pursuant to Section 6(c) of the 1940 Act exempting certain life insurance companies and their separate accounts that currently invest in or may hereafter invest in the Fund from the provisions of Sections 9(a), 13(a), 15(a) and 15(b) of the Act and Rules 6e–2(b)(15) and 6e–3(T)(b)(15) thereunder, to the extent necessary to permit shares of the Fund (the ''Shares''), and shares of any existing or future investment company that is designed to fund insurance products and for which the Investment Adviser or any of its affiliates, may serve as investment adviser, investment manager, subadviser, administrator, principal underwriter or sponsor (collectively the ''Insurance Funds'') to be sold to and held by: (a) Separate accounts funding variable annuity contracts and variable life insurance policies (collectively ''Variable Contracts'') issued by both affiliated life insurance companies and unaffiliated life insurance companies; (b) trustees of qualified group pension and group retirement plans outside of the separate account context, (''Qualified Plans''); (c) separate accounts that are not registered as investment companies under the 1940 Act pursuant to exemptions from registration under Section 3(c) of the 1940 Act; (d) the Investment Adviser or any successor in interest to the Investment Adviser (''Adviser'') for the purpose of providing seed capital to an Insurance Fund; and (e) any other account of a Participating Insurance Company permitted to hold shares of an Insurance Fund (''General Accounts'').

FILING DATE: The Application was filed on March 28, 2005 and amended and restated on October 3, 2005 and June 16, 2006.

HEARING OR NOTIFICATION OF HEARING: If no hearing is ordered, the requested exemption will be granted. Any interested person may request a hearing on this Application, or ask to be notified if a hearing is ordered. Any requests must be received by the Commission by 5:30 p.m. on July 19, 2006. Request a hearing in writing, giving the nature of your interest, the reason for the request, and the issues you contest. Serve the Applicants with the request, either personally or by mail, and also send it to the Secretary of the Commission, along with proof of service by affidavit, or in the case of any attorney-at-law by certificate. Request notification of the date of a hearing by writing to the Secretary of the Commission.

ADDRESSES: The Commission: Secretary, Securities and Exchange Commission, 100 F Street, NE., Washington, DC 20549–1090; Applicants: C/O Lawrence B. Stoller, Esq., 280 Park Avenue, New York, NY 10017.

FOR FURTHER INFORMATION CONTACT: Rebecca A. Marquigny, Senior Counsel, or Joyce M. Pickholz, Branch Chief, Office of Insurance Products, Division of Investment Management, at (202) 551–6795.

SUPPLEMENTARY INFORMATION: The following is a summary of the Application. The complete Application is available for a fee from the Commission's Public Reference Branch, SEC's Public Reference Branch, 100 F Street, NE., Room 1580, Washington, DC 20549 (telephone (202) 551–8090).

Applicant's Representations

1. Each Insurance Funds is, or will be, registered under the 1940 Act as an open-end management investment company. The Fund (1940 Act Registration No. 811–21669) was incorporated under Maryland law on November 10, 2004 and is registered under the 1940 Act as a non-diversified management investment company. The Fund's registration statement became effective on January 27, 2005. The Fund's Shares are not sold to the general public, but are currently offered to separate accounts funding variable annuity contracts issued by Merrill Lynch Life Insurance Company, ML Life Insurance Company of New York and affiliated entities.

2. The Investment Adviser was organized in 1986, under the laws of the State of New York, and registered with the Commission under the Investment Advisers Act of 1940. The Investment

Adviser is a wholly owned subsidiary of Cohen & Steers, Inc., a publicly traded company whose common stock is listed on the New York Stock Exchange under the symbol ''CNS.''

3. Applicants represent that the Fund intends to, and other Insurance Funds may in the future, offer Shares to separate accounts of affiliated and unaffiliated insurance companies in order to fund various types of insurance products. Applicants represent that these products may include, but are not limited to, variable annuity contracts, scheduled premium variable life insurance policies, single premium variable life insurance policies and flexible premium variable life insurance polices. Applicants further represent that these separate accounts are, or will be, registered as investment companies under the 1940 Act or will be exempt from such registration (individually a ''Separate Account'' and collectively the ''Separate Accounts''). Insurance companies whose Separate Account(s) may now or in the future own Shares are referred to herein as ''Participating Insurance Companies.''

4. Applicants represent that the Participating Insurance Companies have established, or will establish, their own Separate Accounts and design their own Variable Contracts. Each Participating Insurance Company has, or will have, the legal obligation to satisfy all applicable requirements under both state and federal law. Each Participating Insurance Company may rely on Rule 6e–2 or Rule 6e–3(T) under the 1940 Act, although in connection with the establishment and maintenance of Separate Accounts funding variable life insurance polices some Participating Insurance Companies may rely on individual exemptive orders as well.

5. Applicants state that each Participating Insurance Company on behalf of its Separate Accounts has entered, or will enter, into a participating agreement with each Insurance Fund in which it invests which will govern participation by the Participating Insurance Company in such Insurance Fund (a ''Participating Agreement''). The role of the Insurance Fund under this arrangement, insofar as federal securities laws are applicable, will consist of offering Shares to the Separate Accounts and fulfilling any conditions that the Commission may impose upon granting the order requesting herein.

6. Applicants propose that the Insurance Funds also be permitted to offer and/or sell Shares to Qualified Plans administered by a Trustee. Section 817(h) of the Internal Revenue Code of 1986, as amended (the ''Code''), imposes certain diversification standards on the underlying assets of Separate Accounts funding Variable Contracts. In particular, the Code provides that Variable Contracts shall not be treated as an annuity contract or life insurance policy for any period (and any subsequent period) for which the underlying assets are not, in accordance with regulations prescribed by the Treasury Department, adequately diversified. On March 2, 1989, the Treasury Department issued regulations (individually a ''Treasury Regulation'' and collectively the ''Treasury Regulations''), specifically Treasury Regulation Section 1.817–5, that established diversification requirements for Variable Contracts, which require the Separate Accounts upon which these contracts or policies are based to be diversified as provided in the Treasury Regulations. In the case of Separate Accounts that invest in underlying investment companies, the Treasury Regulations provide a ''look through'' rule that permits the Separate Account to look to the underlying investment company for purposes of meeting the diversification requirements, provided that the beneficial interests in the investment company are held only by the segregated asset accounts of one or more insurance companies. However, the Treasury Regulations also contain certain exceptions to this requirement, one of which allows shares in an investment company to be held by the trustee of a qualified pension or retirement plan without adversely affecting the ability of shares in the same investment company to also be held by Separate Accounts funding Variable Contracts (Treas. Reg. Section 1.817–5(f)(3)(iii)). Another exception allows the investment manager of the investment company and certain companies related to the investment manager to hold shares of the investment company, an exception that is often used to provide the capital required by Section 14(a) of the 1940 Act.

7. Qualified Plans may choose the Shares offered as the sole investment under the Qualified Plan or as one of several investments. Qualified Plan participants may or may not be given an investment choice depending on the terms of the Qualified Plan itself. Exercise of voting rights by participants in any such Qualified Plans as opposed to the trustees of such Qualified Plans, as opposed to the trustees of such Qualified Plans, cannot be mandated by the Applicants. Each Qualified Plan must be administered in accordance with the terms of the Qualified Plan and as determined by its trustee or trustees. To the extent permitted under applicable law, an Adviser or an affiliated person of the Adviser may act as investment adviser or trustee to Qualified Plans that purchase Shares.

8. Applicants propose that the Insurance Funds also be permitted to offer and/or sell Shares to an Adviser. The Treasury Regulations permit such sales as long as the return on Shares held by the Adviser is computed in he same manner as for Shares held by the Separate Accounts, and the Adviser does not intend to sell the shares to the Public. The Treasury Regulations impose an additional restriction on sales to an Adviser, who may hold Shares only in connection with the creation of an Insurance Fund. Applicants anticipate that sales will be made to an Adviser for the purpose of providing necessary capital required by Section 14(a) of the 1940 Act. Any Shares purchased by an Adviser will automatically be redeemed if and when the Adviser's investment advisory agreement terminates.

9. Applicants proposed that the Insurance Funds also be permitted to offer and/or sell Shares to General Accounts. The Treasury Regulations permit sales to General Accounts as long as the return on Shares held by General Accounts is computed in the same manner as for Shares held by a Separate Account, and the General Accounts do not intend to sell the Shares to the Public. Applicants anticipate that sales may be made to General Accounts for purposes of creation of the Insurance Funds.

Applicant's Legal Analysis

1. In connection with the funding of scheduled premium variable life insurance policies issued through a Separate Account registered as a unit investment trust (''UIT'') under the 1940 Act, Rule 6e–2(B)(15) provides partial exemptions from Sections 9(a), 13(a), 15(a), and 15(b) of the 1940 act. Section (a)(2) of the 1940 Act makes it unlawful for any company to serve as an investment adviser or principal underwriter of any UIT, if an affiliated person of that company is subject to disqualification enumerated in Section 9(a)(1) or (2) of the 1940 Act. Sections 13(a), 15(a) and 15(b) of the 1940 Act has been deemed by the Commission to require ''pass-thorugh'' voting with respect to an underlying investment company's shares. Rule 6e–2(b)(15) provides these exemptions apply only where all of the assets of the UIT are shares of management investment companies ''which offer their shares

exclusively to variable life insurance separate accounts of the life insurer or of any affiliated life insurance company.'' Therefore, the relief granted by Rule 6e–2(b)(15) is not available with respect to a scheduled premium life insurance Separate Account that owns shares of an underlying fund that also offers its shares to a variable annuity Separate Account or a flexible premium variable annuity Separate Account or a flexible premium variable life insurance Separate Account of the same company or any other affiliated company. The use of a common management investment company as the underlying investment vehicle for both variable annuity and variable life insurance Separate Accounts of the same life insurance company or of any affiliated life insurance company is referred to herein as ''mixed funding.''

2. The relief granted by rule 6e–2(b)(15) also is not available with respect to a scheduled premium variable life insurance Separate Accounts that owns shares of an underlying fund that also offers its shares to Separate Accounts funding Variable Contracts issued by one or more unaffiliated life insurance companies. The use of a common management investment company as the underlying investment vehicle for Separate Accounts funding Variable Contracts issued by one or more unaffiliated life insurance companies is referred to herein as ''shared funding.''

3. Moreover, because the relief under Rule 6e–2(b)(15) is available only where shares are offered exclusively to variable life insurance Separate Accounts of a life insurer or any affiliated life insurance company, additional exemptive relief is necessary if the Shares are also to be sold to Qualified Plans, an Adviser and General Accounts (collectively, ''Eligible Purchasers''). Applicants note that if the Shares were sole only to Separate Accounts funding variable annuity contracts and/or Eligible Purchasers, exemptive relief under Rule 6e–2(b)(15) would not be necessary. The relief provided for under this section does not relate to Eligible Purchasers or to a registered investment company's ability to sell its shares to Eligible Purchasers. The use of a common management investment company as the underlying investment vehicle for Separate Accounts funding Variable Contracts issued by affiliated and unaffiliated insurance companies, and for Eligible Purchasers, is referred to herein as ''extended mixed and shared funding.''

4. In connection with flexible premium variable life insurance contracts issued through a Separate Account registered under the 1940 Act as a UIT, Rule 6e–3(T)(b)(15) provides partial exemptions from Sections 9(a), 13(a), 15(a) and 15(b) of the 1940 Act. The exemptions granted by Rule 6e–3(T)(b)(15) are available only where all the assets of the Separate Account consist of the shares of one or more registered management investment companies that offer to sell their shares ''exclusively to separate accounts of the life insurer, or of any affiliated life insurance companies, offering either scheduled contracts or flexible contracts, or both; or which also offer their shares to variable annuity separate accounts of the life insurer or of an affiliated life insurance company or which offer their shares to any such life insurance company in consideration solely for advances made by the life insurer in connection with the operation of the separate account.'' Therefore, Rule 6e–3(T)(b)(15) permits mixed funding but does not permit shared funding.

5. Moreover, because the relief under Rule 6e–3(T)(b)(15) is available only where Shares are offered exclusively to Separate Accounts funding Variable Contracts issued by a life insurer or any affiliated life insurance company, additional exemptive relief is necessary if the Shares are also to be sold to Eligible Purchasers, as described above. Applicants noted that if the Shares were sold only to Separate Accounts funding variable annuity contracts and/or Eligible Purchasers, exemptive relief under Rule 6e–3(T)(b)(15) would not be necessary. The relief provided for under this section does not relate to Eligible Purchasers or to a registered investment company's ability to sell its shares to Eligible Purchasers.

6. Applicants maintain, as discussed below, that there is no policy reason for the sale of the Shares to Eligible Purchasers to result in a prohibition against, or otherwise limit a Participating Insurance Company from relying on the relief provided by Rules 6e–3(T)(b)(15) and 6e–3(T)(b)(15). However, because the relief under Rules 6e–2(b)(15) and 6e–3(T)(b)(15) is available only when shares are offered exclusively to certain Separate Accounts, additional exemptive relief may be necessary if the Shares are also to be sold to Eligible Purchasers. Applicants therefore request relief in order to have the Participating Insurance Companies enjoy the benefits of the relief granted in Rules 6e–2(b)(15) and 6e–3(T)(b)(15) even where Eligible Purchasers are investing in the relevant Insurance Fund. Applicants note that if the Shares were to be sold only to Eligible Purchasers, and/or Separate Accounts funding variable annuity contracts, exemptive relief under Rules 6e–2(b)(15) and 6e–3(T)(b)(15) would be unnecessary. The relief provided for under Rules 6e–2(b)(15) and 6e–3(T)(b)(15) does not relate to Eligible Purchasers, or to a registered investment company's ability to sell its shares to Eligible Purchasers.

7. Consistent with the Commission's authority under Section 6(c) of the 1940 Act to grant exemptive orders to a class or classes of persons and transactions, this Application requests relief for the class consisting of Participating Insurance Companies and their Separate Accounts (and to the extent necessary, investment advisers, principal underwriters and depositors of such Separate Accounts).

8. In effect, the partial relief granted in Rules 6e-2(b)(15) and 6e–3(T)(b)(15) under the 1940 Act from the requirements of Section 9 of the 1940 Act limits the amount of monitoring necessary to ensure compliance with Section 9 to that which is appropriate in light of the policy and purposes of Section 9. Those rules recognize that it is not necessary for the protection of investors or the purposes fairly intended by the policy and provisions of the 1940 Act to apply the provisions of Section 9(a) to individuals in a large insurance complex, most of whom will have no involvement in matters pertaining to investment companies in that organization. Applicants assert that it is also unnecessary to apply Section 9(a) of the 1940 Act to the many individuals in various unaffiliated insurance companies (or affiliated companies of Participating Insurance Companies) that may utilize the Insurance Funds as investment vehicles for Variable Contracts. Applicants argue that there is no regulatory purpose in extending the monitoring requirements to embrace a full application of section 9(a)'s eligibility restrictions because of mixed funding or shared funding and sales to Qualified Plans, an Adviser or General Accounts. Applicants represent that the Participating Insurance Companies and Qualified Plans are not expected to play any role in the management of the Insurance Funds. Applicants further represent that those individuals who participate in the management of the Insurance Funds will remain the same regardless of which Separate Accounts or Qualified Plans invest in the Insurance Funds. Applicants argue that applying the monitoring requirements of Section 9(a) of the 1940 Act because of investment by Separate Accounts of Participating Insurance Companies or Qualified Plans would be unjustified, would not serve any regulatory purpose

and could reduce the net rates of return realized by contract owners and Qualified Plan holders due to the increased monitoring costs.

9. Rules 6e–2(b)(15)(iii) and 6e–3(T)(b)(15)(iii) under the 1940 Act provide exemptions from pass-through voting requirements with respect to several significant matters, assuming the limitations on mixed and shared funding are observed. Rules 6e–2(b)(15)(iii)(A) and 6e–3(T)(b)(15)(iii)(A) provide that the insurance company may disregard the voting instructions of its contract owners with respect to the investments of an underlying fund, or any contract between such a fund and its investment adviser, when required to so by an insurance regulatory authority (subject to the provisions of Rules 6e–2(b)(5)(i), 6e–2(b)(7)(ii)(A), 6e–3(T)(b)(5)(i) and 6e–3(T)(b)(7)(ii)(A) under the 1940 Act). Rules 6e–2(b)(15)(iii)(B) and 6e–3(T)(b)(15)(iii)(A)(2) provide that an insurance company may disregard the voting instructions of its contract owners if the contract owners initiate any change in an underlying fund's investment policies, principal underwriter or any investment adviser (provided that disregarding such voting instructions is reasonable and subject to the other provisions of Rules 6e–2(b)(5)(ii), 6e–2(b)(7)(ii)(B), 6e–2(b)(7)(ii)(C), 6e–3(T)(b)(5)(ii), 6e–3(T)(b)(7)(ii)(B), and 6e–3(T)(b)(7)(ii)(C) under the 1940 Act).

10. Rule 6e–2 under the 1940 Act recognizes that a variable insurance contract, as an insurance contract, has important elements unique to insurance contracts and is subject to extensive state regulation. In adopting Rule 6e–2(b)(15)(iii), the Commission expressly recognized that state insurance regulators have authority, pursuant to state insurance laws or regulations, to disapprove or require changes in investment policies, investment advisers, or principal underwriters. The Commission also expressly recognized that state insurance regulators have authority to require an insurer to draw from its general account to cover costs imposed upon the insurer by a change approved by contract owners over the insurer's objection. The Commission, therefore, deemed such exemptions necessary ''to assure the solvency of the life insurer and performance of its contractual obligations by enabling an insurance regulatory authority or the life insurer to act when certain proposals reasonably could be expected to increase the risks undertaken by the life insurer.'' In this respect, flexible premium variable life insurance contracts are identical to scheduled premium variable life insurance contracts. Applicants, therefore, assert that the corresponding provisions of Rule 6e–3(T) under the 1940 Act undoubtedly were adopted in recognition of the same factors.

11. Applicants also assert that the sale of Shares to Qualified Plans, an Adviser and General Accounts will not have any impact on the relief requested. With respect to Qualified Plans, which are not registered as investment companies under the 1940 Act, shares of a portfolio of an investment company sold to a Qualified Plan must be held by the trustee(s) of the Qualified Plan pursuant to Section 403(a) of the Employee Retirement Income Security Act (''ERISA''). Applicants note that (1) Section 403(a) of ERISA endows Qualified Plan trustees with the exclusive authority and responsibility for voting proxies provided neither of two enumerated exceptions to that provision applies; (2) some of the Qualified Plans may provide for the trustee(s), an investment adviser (or advisers), or another named fiduciary to exercise voting rights in accordance with instructions from participants; and (3) there is no requirement to pass through voting rights to Qualified Plan participants.

12. Applicants argue that an Adviser and General Accounts are similar in that they are not subject to any pass-through voting requirements. Applicants, therefore, conclude that unlike the case with insurance company Separate Accounts, the issue of resolution of material irreconcilable conflicts with respect to voting is not present with Eligible Purchasers.

13. Applicants represent that where a Qualified Plan does not provide participants with the right to give voting instructions, the trustee or named fiduciary has fiduciary responsibility to vote the shares held by the Qualified Plan in the best interest of the Qualified Plan participants. Accordingly, Applicants argue that even if an Adviser or an affiliate of an Adviser were to serve in the capacity of trustee or named fiduciary with voting responsibilities, an Adviser or its affiliates would have a fiduciary duty to vote relevant Shares in the best interest of the Qualified Plan participants.

14. Further, Applicants assert that even if a Qualified Plan were to hold a controlling interest in an Insurance Fund, Applicants do not believe such control would disadvantage other investors in such Insurance Fund to any greater extent than is the case when any institutional shareholder holds a majority of the voting securities of any open-end management investment company. In this regard, Applicants submit that investment in an Insurance Fund by a Qualified Plan will not create any of the voting complications occasioned by mixed funding or shared funding. Unlike mixed funding or shared funding, Applicants argue that Qualified Plan investor voting rights cannot be frustrated by veto rights of insurers or state regulators.

15. Where a Qualified Plan provides participants with the right to give voting instructions, Applicants see no reason to believe that participants in Qualified Plans generally or those in a particular Qualified Plan, either as a single group or in combination with participants in other Qualified Plans, would vote in a manner that would disadvantage Variable Contract holders. Applicants assert that the purchase of Shares by Qualified Plans that provide voting rights does not present any complications not otherwise occasioned by mixed or shared funding.

16. Applicants do not believe that the sale of the Shares to Qualified Plans will increase the potential for material irreconcilable conflicts of interest between or among different types of investors. In particular, Applicants see very little potential for such conflicts beyond those that would otherwise exist between Variable Contract owners.

17. Applicants assert that permitting an Insurance Fund to sell its shares to an Adviser or to the General Account of a Participating Insurance Company will enhance management of each Insurance Fund without raising significant concerns regarding material irreconcilable conflicts. Unlike the circumstances of many investment companies that serve as underlying investment media for variable insurance products, an Insurance Fund may be deemed to lack an insurance company ''promoter'' for purposes of Rule 14a–2 under the 1940 Act. Accordingly, any Insurance Funds that are established as new registrants may be subject to the requirements of Section 14(a) of the 1940 Act, which generally requires that an investment company have a net worth of $100,000 upon making a public offering of its shares. Insurance Funds also will require more limited amounts of initial capital in connection with the creation of any new series of Shares and the voting of initial Shares of such series on matters requiring the approval of Shareholders. A potential source of the requisite initial capital is an Insurance Fund's investment adviser or a Participating Insurance Company. Either of these parties may have an interest in making the requisite capital and in participating with an Insurance Fund in its organization. However, provision of

seed capital or the purchase of shares in connection with the management of an Insurance Fund by its investment adviser or by a Participating Insurance Company may be deemed to violate the exclusivity requirement of Rule 6e–2(b)(15) and/or Rule 6e–3(T)(b)(15).

18. Given the conditions of Treas. Reg. Section 1.817–5(f)(3) and the harmony of interest between an Insurance Fund, on the one hand, and an Adviser or a Participating Insurance Company, on the other, Applicants assert that little incentive for overreaching exists. Applicants further assert that such investment should not implicate the concerns discussed above regarding the creation of material irreconcilable conflicts. Instead, Applicants argue that permitting investments by an Adviser, or by General Accounts, will permit the orderly and efficient creation of an Insurance Fund, and reduce the expense and uncertainty of using outside parties at the early stages of the Insurance Fund's operations.

Applicants' Conditions

Applicants consent to the following conditions with respect to each Insurance Fund:

1. A majority of the Board of each Insurance Fund will consist of persons who are not ''interested persons'' of the Insurance Fund, as defined by Section 2(a)(19) of the 1940 Act, and the rules thereunder, and as modified by any applicable orders of the Commission, except that if this condition is not met by reason of death, disqualification or bona fide registration of any trustee or trustees, then the operation of this condition will be suspended: (a) For a period of 90 days if the vacancy or vacancies may be filled by the Board; (b) for a period of 150 days if a vote of shareholders is required to fill the vacancy or vacancies; or (c) for such longer period as the Commission may prescribe by order upon application.

2. The Board of each Insurance Fund will monitor the Insurance Fund for the existence of any material irreconcilable conflict between the interests of the contract owners of all Separate Accounts and participants of all Qualified Plans investing in the Insurance Fund, and determine what action, if any should be taken in response to such conflicts. A material irreconcilable conflict may arise for a variety of reasons, including: (a) An action by any state insurance regulatory authority; (b) a change in applicable federal or state insurance, tax, or securities laws or regulations, or a public ruling, private letter ruling, no-action or interpretive letter, or any similar action by insurance, tax or securities regulatory authorities; (c) an administrative or judicial decision in any relevant proceeding; (d) the manner in which the investments of the Insurance Fund are being managed; (e) a difference in voting instructions given by variable annuity contract owners, variable life insurance contract owners, and trustees of the Qualified Plans; (f) a decision by a Participating Insurance Company to disregard the voting instructions of contract owners; or (g) if applicable, a decision by a Qualified Plan to disregard the voting instructions of Qualified Plan participants.

3. Participating Insurance Companies (on their own behalf, as well as by virtue of any investment of General Account assets in an Insurance Fund), as Adviser, and any Trustee on behalf of any Qualified Plan that executes a Participation Agreement upon becoming an owner of 10 percent or more of the assets of an Insurance Fund (collectively, ''Participant'') will report any potential or existing conflicts to the Board of the relevant Insurance Fund. Participants will be reasonsible for assisting the Board in carrying out the Board's responsibilities under these conditions by providing the Board with all information reasonably necessary for the Board to consider any issues raised. This responsibility includes, but is not limited to, an obligation by each Participating Insurance Company to inform the Board whenever contract owner voting instructions are disregarded, and, if pass-through voting is applicable, an obligation by each Trustee for a Qualified Plan to inform the Board whenever it has determined to disregard Qualified Plan participant voting instructions. The responsibility to report such information and conflicts, and to assist the Board, will be a contractual obligation of all Participating Insurance Companies under their Participation Agreement with the relevant Insurance Fund, and these responsibilities will be carried out with a view only to the interests of the contract owners. The responsibility to report such information and conflicts, and to assist the Board, also will be contractual obligations of all Qualified Plans under their Participation Agreement with the relevant Insurance Fund, and such agreements will provide that these responsibilities will be carried out with a view only to the interests of Qualified Plan participants.

4. If it is determined by a majority of the Board of an Insurance Fund, or a majority of the disinterested directors/trustees of such Board, that a material irreconcilable conflict exists, then the relevant Participant will, at its expense and to the extent reasonably practicable (as determined by a majority of the disinterested directors/trustees), take whatever steps are necessary to remedy or eliminate the material irreconcilable conflict, up to and including: (a) Withdrawing the assets allocable to some or all of their Separate Accounts from the relevant Insurance Fund and reinvesting such assets in a different investment vehicle including another Insurance Fund, submitting the question as to whether such segregation should be implemented to a vote of all affected contract and policy owners and, as appropriate, segregating the assets of any appropriate group (*i.e.,* variable annuity contract owners or variable life insurance policy owners of one or more Participating Insurance Companies) that votes in favor of such segregation, or offering to the affected contract or policy owners the option of making such a change; and (b) establishing a new registered management investment company or managed separate account. If a material irreconcilable conflict arises because of a decision by a Participating Insurance Company to disregard contract or policy owner voting instructions, and that decision represents a minority position or would preclude a majority vote, then the participating Insurance Company may be required, at the election of the relevant Insurance Fund, to withdraw such participating Insurance Company's Separate Account investments in the Insurance Fund, and no charge or penalty will be imposed as a result of such withdrawal. If a material irreconcilable conflict arises because of a Qualified Plan's decision to disregard Qualified Plan participant voting instructions, if applicable, and that decision represents a minority position or would preclude a majority vote, the Qualified Plan may be required, at the election of the Insurance Fund, to withdraw its investment in the Insurance Fund, and no charge or penalty will be imposed as a result of such withdrawal. The responsibility to take remedial action in the event of a Board determination of a material irreconcilable conflict and to bear the cost of such remedial action will be a contractual obligation of all Participants under their Participation Agreement with the relevant Insurance Fund, and these responsibilities will be carried out with a view only to the interests of contract or policy owners and Qualified Plan participants. For purposes of this Condition 4, a majority of the disinterested directors/trustees of the Board of each Insurance Fund will determine whether or not any proposed

action adequately remedies any material irreconcilable conflict, but, in no event, will the Insurance Fund or an Adviser, as relevant, be required to establish a new funding vehicle for any Variable Contract. No Participating Insurance Company will be required by this Condition 4 to establish a new funding vehicle for any Variable Contract if any offer to do so has been declined by vote of a majority of the contract or policy owners materially and adversely affected by the material irreconcilable conflict. Further, no Qualified Plan will be reuqired by this Condition 4 to establish a new funding vehicle for the Qualified Plan if: (a) A majority of the Qualified Plan participants materially and adversely affected by the irreconcilable material conflict vote to decline such offer, or (b) pursuant to documents governing the Qualified Plan, the Qualified Plan makes such decision without a Qualified Plan participant vote.

5. The Board of each Insurance Fund's determination of the existence of a material irreconcilable conflict and its implications will be made known in writing promptly to all Participants.

6. As to Variable Contracts issued by Separate Accounts registered under the 1940 Act, Participating Insurance Companies will provide pass-through voting privileges to all Variable Contract owners as required by the 1940 Act as interpreted by the Commission. However, as to Variable Contracts issued by unregistered Separate Accounts, pass-through voting privileges will be extended to contract owners to the extent granted by the issuing insurance company. Accordingly, such Participants, where applicable, will vote the Shares held in their Separate Accounts in a manner consistent with voting instructions timely received from Variable Contract owners. Participating Insurance Companies will be responsible for assuring that each Separate Account investing in the relevant Insurance Fund calculates voting privileges in a manner consistent with other Participants. The obligation to calculate voting privileges as provided in this Application will be a contractual obligation of all Participating Insurance Companies under their Participation Agreement with the relevant Insurance Fund. Each Participating Insurance Company will vote Shares for which it has not received timely voting instructions, as well as Shares held in its General Account or otherwise attributed to it, in the same proportion as it votes those Shares for which it has received voting instructions. Each Qualified Plan will vote as required by applicable law and governing Qualified Plan documents.

7. As long as the 1940 Act requires pass-through voting privileges to be provided to Variable Contract owners, an Adviser and any General Account will vote their respective Shares in the same proportion as all variable contract owners having voting rights with respect to that Insurance Fund; provided, however, that an Adviser or any General Account shall vote its Shares in such other manner as may be required by the Commission or its staff.

8. Each Insurance Fund will comply with all provisions of the 1940 Act requiring voting by shareholders, which, for these purposes, shall be the persons having a voting interest in the Shares, and, in particular, the Insurance Fund will either provide for annual meetings (except to the extent that the Commission may interpret Section 16 of the 1940 Act not to require such meetings) or comply with Section 16(c) of the 1940 Act (although each Insurance Fund is not, or will not be, one of those trusts of the type described in Section 16(c) of the 1940 Act), as well as with Section 16(a) of the 1940 Act and, if and when applicable, Section 16(b) of the 1940 Act. Further, each Insurance Fund will act in accordance with the Commission's interpretations of the requirements of Section 16(a) with respect to periodic elections of directors/trustees and with whatever rules the Commission may promulgate thereto.

9. An Insurance Fund will make its shares available to the Separate Accounts and Qualified Plans at or about the time it accepts any seed capital from an Adviser or General Account of a Participating Insurance Company.

10. Each Insurance Fund has notified, or will notify, all Participants that Separate Account prospectus disclosure or Qualified Plan prospectuses or other Qualified Plan disclosure documents regarding potential risks of mixed and shared funding may be appropriate. Each Insurance Fund will disclose, in its prospectus that: (a) Shares of the Fund may be offered to Separate Accounts funding both variable annuity contracts and variable life insurance policies and, if applicable, to Qualified Plans; (b) due to differences in tax treatment and other considerations, the interests of various contract owners participating in the Insurance Fund and the interests of Qualified Plans investing in the Insurance Fund, if applicable, may conflict; and (c) the Insurance Fund's Board will monitor events in order to identify the existence of any material irreconcilable conflicts and to determine what action, if any, should be taken in response to any such conflict.

11. If and to the extent that Rule 6e–2 and Rule 6e–3(T) under the 1940 Act are amended, or proposed Rule 6e–3 under the 1940 At is adopted, to provide exemptive relief from any provision of the 1940 Act, or the rules promulgated thereunder, with respect to mixed or shared funding, on terms and conditions materially different from any exemptions granted in the order requested in this Application, then each Insurance Fund and/or Participating Insurance Companies, as appropriate, shall take such steps as may be necessary to comply with Rules 6e–2 or 6e–3(T), or Rule 6e–3, as such rules are applicable.

12. Each Participant, at least annually, will submit to the Board of each Insurance Fund such reports, materials or data as the Board reasonably may request so that the directors/trustees of the Board may fully carry out the obligations imposed upon the Board by the conditions contained in this Application. Such reports, materials and data will be submitted more frequently if deemed appropriate by the Board of an Insurance Fund. The obligations of the Participants to provide these reports, materials and data to the Board, when it so reasonably requests, will be a contractual obligation of all Participants under their Participation Agreement with the relevant Insurance Fund.

13. All reports of potential or existing conflicts received by the Board of each Insurance Fund, and all Board action with regard to determining the existence of a conflict, notifying Participants of a conflict and determining whether any proposed action adequately remedies a conflict, will be properly recorded in the minutes of the Board or other appropriate records, and such minutes or other records shall be made available to the Commission upon request.

14. Each Insurance Fund will not accept a purchase order from a Qualified Plan if such purchase would make the Qualified Plan an owner of 10 percent or more of the assets of the Insurance Fund unless the Trustee for such Qualified Plan executes an agreement with the Insurance Fund governing participation in the Insurance Fund that includes the conditions set forth herein to the extent applicable. A Trustee for a Qualified Plan will execute an application containing an acknowledgement of this condition at the time of its initial purchase of Shares.

Conclusions

Applicants submit that, for the reasons summarized above and to the extent necessary or appropriate to

provide for the transactions described herein, the requested exemptions from Sections 9(a), 13(a), 15(a), and 15(b) of the 1940 Act and Rules 6e–2(b)(15) and 6e–3(T)(b)(15) thereunder, in accordance with the standards of Section 6(c) of the 1940 Act, are in the public interest and consistent with the protection of investors and the purpose fairly intended by the policy and provisiosn of the 1940 Act.

For the Commission, by the Division of Investment Management, pursuant to delegated authority.

J. Lynn Taylor,

Assistant Secretary.

[FR Doc. 06–5747 Filed 6–27–06; 8:45 am]

BILLING CODE 8010–01–M

SECURITIES AND EXCHANGE COMMISSION

[Release No. 34–54023; File No. SR–NASD–2004–183]

Self-Regulatory Organizations: National Association of Securities Dealers, Inc.; Notice of Filing Amendment No. 2 to Proposed Rule Relating to Sales Practice Standards and Supervisory Requirements for Transactions in Deferred Variable Annuities

June 21, 2006.

Pursuant to section 19(b)(1) of the Securities Exchange Act of 1934 (''Act'') [1] and Rule 19b–4 thereunder,[2] notice is hereby given that on December 14, 2004, NASD filed with the Securities and Exchange Commission (''SEC'' or ''Commission''), the proposed rule. NASD filed amendment No. 1 on July 8, 2005, which replaced and superseded the text of the original rule filing. The proposed rule, as amended by Amendment No. 1, was published for comment in the **Federal Register** on July 21, 2005.[3] The Commission received approximately 1500 comments on the proposal.[4] NASD filed Amendment No. 2 on May 4, 2006, which addressed the comments and proposed responsive amendments. Amendment No. 2 is described in Items I, II and III below, which Items have been prepared by NASD. The Commission is publishing this notice to solicit comments on Amendment No. 2 to the proposed rule from interested persons.

[1] 15 U.S.C. 78s(b)(1).

[2] 17 CFR 240.19b–4.

[3] *See* Exchange Act. Re. No. 52046A (July 19, 2005); 70 FR 42126 (July 21, 2005) (SR–NASD–2004–183).

[4] Approximately 1300 of these comments were virtually identical.

I. Self-Regulatory Organization's Statement of the Terms of Substance of the Proposed Rule

NASD is proposing a new rule, NASD Rule 2821, that would set forth recommendation requirements (including a suitability obligation), principal review and approval requirements, and supervisory and training requirements tailored specifically to transactions in deferred variable annuities. Below is the amended text of the proposed rule.

* * * * *

2821. Members' Responsibilities Regarding Deferred Variable Annuities

(a) General Considerations

(1) Application

This Rule applies to the purchase or exchange of a deferred variable annuity and the subaccount allocations. This Rule does not apply to reallocations of subaccounts made or to funds paid after the initial purchase or exchange of a deferred variable annuity. This Rule also does not apply to deferred variable annuity transactions made in connection with any tax-qualified, employer-sponsored retirement or benefit plan that either is defined as a ''qualified plan'' under Section 3(a)(12)(C) of the Securities Exchange Act of 1934 or meets the requirements of Internal Revenue Code Sections 403(b), 457(b) or 457(f), unless, in the case of any such plan, a member makes recommendations to an individual plan participant regarding a deferred variable annuity, in which case the Rule would apply as to the individual plan participant to whom the member makes such recommendations.

(2) Creation, Storage and Transmission of Documents

For purposes of this Rule, documents may be created, stored and transmitted in electronic or paper form, and signatures may be evidenced in electronic or other written form.

(3) Definitions

For purposes of this Rule, the term ''registered principal'' shall mean a person registered as a General Securities Sales Supervisor (Series 9/10), a General Securities Principal (Series 24) or an Investment Company Products/Variable Contracts Principal (Series 26), as applicable.

(b) Recommendation Requirements

(1) No member or person associated with a member shall recommend to any customer the purchase or exchange of a deferred variable annuity unless such member or person associated with a member has a reasonable basis to believe that.

(A) The customer has been informed of the material features of a deferred variable annuity, such as the potential surrender period and surrender charge; potential tax penalty if the customer sells or redeems the deferred variable annuity before he or she reaches the age of 59½; mortality and expense fees; investment advisory fees; potential charges for and features of riders; the insurance and investment components of a deferred variable annuity; and market risk;

(B) The customer would benefit from the unique features of a deferred variable annuity (e.g., tax-deferred growth, annuitization or a death benefit); and

(C) The particular deferred variable annuity as a whole, the underlying subaccounts to which funds are allocated at the time of the purchase or exchange of the deferred variable annuity and riders and similar product enhancements, if any, are suitable (and, in the case of an exchange, the transaction as a whole also is suitable) for the particular customer based ont he information required by paragraph (b)(2) of this Rule.

These determinations shall be documented and signed by the associated person recommending the transaction.

(2) Prior to recommending the purchase or exchange of a deferred variable annuity, a member or person associated with a member shall make reasonable efforts to obtain, at a minimum, information concerning the customer's age, annual income, financial situation and needs, investment experience, investment objectives, intended use of the deferred variable annuity, investment time horizon, existing investment and life insurance holdings, liquidity needs, liquid net worth, risk tolerance, tax status and such other information used or considered to be reasonable by the member or person associated with the member in making recommendations to customers.

(c) Principal Review and Approval

(1) No later than two business days following the date when a member or person associated with a member transmits a customer's application for a deferred variable annuity to the issuing insurance company for processing and irrespective of whether the transaction has been recommended, a registered principal shall review and determine whether he or she approves of the purchase or exchange of the deferred variable annuity. In reviewing the

purchase or exchange of a deferred variable annuity, the registered principal shall consider.

(A) The extent to which the customer would benefit from the unique features of a deferred variable annuity (e.g., tax-deferred growth, annunciation or a death benefit);

(B) The extent to which the customer's age or liquidity needs make the investment inappropriate;

(C) The extent to which the amount of money invested would result in an undue concentration in a deferred variable annuity or deferred variable annuities in the context of the customer's overall investment portfolio; and

(D) If the transaction involves an exchange of a deferred variable annuity, the extent to which (i) the customer would incur a surrender charge, be subject to the commencement of a new surrender period, lose death or existing benefits, or be subject to increased fees or charges (such as mortality and expense fees, investment advisory fees and charges for riders and similar product enhancements), (ii) the customer would benefit from any potential product enhancements and improvements, and (iii) the customer's account has had another deferred variable annuity exchange within the preceding 36 months.

These considerations shall be documented and signed by the registered principal who reviewed and approved the transaction.

(2) When a member or a person associated with a member has recommended the purchase or exchange of a deferred variable annuity, a registered principal, taking into account the underlying supporting documentation described in paragraph (b)(2) of this Rule, shall review, determine whether to approve and, if approved, sign the suitability determination document required by paragraph (b)(1) of this Rule no later than two business days following the date when the member or person associated with the member transmits the customer's application for a deferred variable annuity contract to the issuing insurance company for processing.

(d) Supervisory Procedures

In addition to the general supervisory and recordkeeping requirements of Rules 3010, 3012, 3013 and 3110, a member must establish and maintain specific written supervisory procedures reasonably designed to achieve compliance with the standards set forth in this Rule. In particular, the member must implement procedures to screen the transaction and require a registered principal to consider those items enumerated in paragraph (c) of this Rule, as well as whether the associated person effecting the transaction has a particularly high rate of effecting deferred variable annuity exchanges.

(e) Training

Members shall develop and document specific training policies or programs reasonably designed to ensure that associated persons who effect and registered principals who review transactions in deferred variable annuities comply with the requirements of this Rule and that they understand the material features of deferred variable annuities, including those described in paragraph (b)(1)(A) of this Rule.

* * * * *

II. Self-Regulatory Organization's Statement of the Purpose of, and Statutory Basis for, the Proposed Rule

In its filing with the Commission, NASD included statements concerning the purpose of and basis for the proposed rule and discussed the comments it received on the proposed rule. The text of these statements may be examined at the places specified in Item IV below. NASD has prepared summaries, set forth in sections A, B, and C below, of the most significant aspects of such statements.

A. Self-Regulatory Organization's Statement of the Purpose of, and Statutory Basis for, the Proposed Rule

1. Purpose

a. Background

On December 14, 2004, NASD filed with the Commission proposed Rule 2821 (SR–NASD–2004–183). NASD filed with the Commission Amendment No. 1 to the proposed rule on July 8, 2005. The Commission published the proposed rule, as amended by Amendment No. 1, in the **Federal Register** on July 21, 2005.[5] The comment period closed on September 19, 2005. Based on comments received in response to the publication of the proposed rule in the **Federal Register,** NASD filed Amendment No. 2 to SR–NASD–2004–183 to address the comments and to make certain changes to the proposed rule as discussed herein.

b. Proposed Rule

As described in the original and amended rule filings, NASD is proposing new NASD Rule 2821, which would impose specific sales practice standards and supervisory requirements on members for transactions in deferred variable annuities.[6] In general, NASD's guidelines on deferred variable annuity transactions, developed with substantial input from industry participants and published in *Notice to Members* 99–35, served as the basis for the proposed rule.

The proposed rule would apply to the purchase or exchange of a deferred variable annuity and the initial subaccount allocations.[7] The proposed rule would not apply to reallocations of subaccounts or to funds paid after the initial purchase or exchange of a

[5] *See supra* note 3.

[6] A variable annuity, in general, is a cotnract between an investor and an insurance company whereby the insurance company promises to make periodic payments to the contract owner or beneficiary, starting immediately (an immediate variable annuity) or at some future time (a deferred variable annuity). *See* Joint SEC and NASD Staff Report on Broker-Dealer Sales of Variable Insurance Products (June 2004) (''Joint Report''); NASD *Notice to Members* 99–35 (May 1999). The proposed rule focuses exclusively on transactions in *deferred* variable annuities. NASD recognizes that transactions involving immediate variable annuities have begun to increase recently, and NASD will continue to monitor sales practices relating to these products. Currently, however, deferred variable annuities make up the majority of variable annuity transactions. Moreover, to date, most of the problems associated with transactions in variable annuities that NASD has uncovered involve the purchase or exchange of deferred variable annuities.

[7] NASD notes that the proposed rule focuses on customer purchases and exchanges of deferred variable annuities, areas that, to date, have given rise to many of the problems NASD has uncovered. The proposed rule would thus cover a standalone purchase of a deferred variable annuity and an exchange of one deferred variable annuity for another for another deferred variable annuity. For purposes of the proposed rule, an ''exchange'' of a product other than a deferred variable annuity (such as a fixed annuity) for a deferred variable annuity would be covered by the proposed rule as a ''purchase.'' The proposed rule would not cover customer sales of deferred variable annuities, including the sale of a deferred variable annuity in connection with an ''exchange'' of a deferred variable annuity for another product (such as a fixed annuity). However, recommendations of customer sales of deferred variable annuities are fully and adequately covered by Rule 2310, NASD's general suitability rule. Rule 2310 requires that, when recommending that a customer purchase, sell or exchange a security, an associated person determine whether the recommendation is suitable for the customer. In general, deferred variable annuities are suitable only as long-term investments and are inappropriate short-term trading vehicles. As part of any analysis under Rule 2310 regarding the suitability of a recommendation that a customer sell a deferred variable annuity, the associated person must consider significant tax consequences, surrender charges and loss of death or other benefits. As NASD emphasized in a *Regulatory & Compliance Alert* in 2002, entitled ''Reminder—Suitablity of Variable Annuity Sales,'' members and their associated persons ''must keep in mind that the suitability rule applies to any recommendation to sell a variable annuity regardless of the use of the proceeds, including situations where the member recommends using the proceeds to purchase an unregistered product such as an equity-indexed annuity. Any recommendation to sell the variable annuity must be based upon the financial situation, objectives and needs of the particular investor.''

deferred variable annuity. However, other NASD rules would continue to apply. For instance, NASD's suitability rule, Rule 2310, would continue to apply to any recommendations to reallocate subaccounts.[8]

The proposed rule also would not apply to sales of deferred variable annuities to certain tax-qualified, employer-sponsored retirement or benefit plans. It would, however, apply if a member makes recommendations to individual plan participants regarding a deferred variable annuity.[9] In addition, the rule would apply to the purchase or exchange of deferred variable annuities to fund individual retirement accounts (IRAs). In part, NASD determined not to exclude IRAs from the scope of the proposed rule because, unlike transactions for tax-qualified, employer-sponsored retirement or benefit plans, investors funding IRAs are not limited to the options provided by a plan.[10]

The proposed rule has four main provisions: (1) Requirements governing recommendations, including a suitability obligation, specifically tailored to deferred variable annuity transactions; [11] (2) principal review and approval obligations; [12] (3) a specific requirement for members to establish and maintain written supervisory procedures reasonable designed to achieve compliance with the standards set forth in the proposed rule; [13] and (4) a targeted training requirement for members' associated persons, including their registered principals.[14]

NASD will announce the effective date of the proposed rule in a *Notice to Members* to be published no later than 60 days following Commission approval. The effective date will be 180 days following publication of the *Notice to Members* announcing Commission approval.

c. Comments on the Proposed Rule

The Commission received nearly 1500 comment letters in response to the publication of the proposed rule in the **Federal Register**. These comments are available on the Commission's Internet Web site (*http://www.sec.gov/rules/sro.shtml*). A summary of the comments and NASD's response is set forth below.

While some commenters expressed support for the proposed rule,[15] most opposed it.[16] Reasons for their opposition varied. Several commenters stated that the proposal should be withdrawn, viewing it as unnecessary and arguing that NASD has not demonstrated a need for it.[17] While NASD disagreed with the suggestion that there must be demonstrable harm before it can engage in rulemaking, in its response to comments it also noted the numerous Notices to Members, Regulatory & Compliance Alerts and Investor Alerts that it has issued regarding deferred variable annuities. NASD also noted that notwithstanding those efforts, a recent joint review with the Commission, NASD examinations and NASD enforcement actions indicate NASD's prior efforts have not been sufficiently effective at curbing problems in this area.

i. Comments on Proposed Rule 2821(a)(1)—Application

Numerous commenters argued that the rule should not apply to tax-qualified, employer-sponsored retirement or benefit plans. One commenter believed, however, that the rule should apply to those plans in which the plan sponsor, trustee, or custodian is either ''unsophisticated'' or primarily relied on the recommendation of the member.[18] NASD disagreed. In its response to comments, NASD stated that the rule should not apply to plan-level decisions. In NASD's view, the factors that can be important to understanding the appropriateness of a recommendation to a sponsor, trustee or custodian of a qualified retirement or benefit plan can be distinct from those that are important regarding the determination of the appropriateness of a recommendation to a retirement-plan participant.

One commenter suggested that, in addition to transactions in connection with ''qualified plans'' as defined in Section 3(a)(12)(C) of the Act and plans that meet the requirements of Internal Revenue Code Sections 403(b) and 457(b), the rule should not apply to transactions with plans that meet the requirements of Section 457(f) of the Internal Revenue Code, unless the member makes a recommendation to an individual plan participant.[19] NASD agreed and proposes to exclude transactions in connection with these plans from the rule. Another commenter argued that the rule should not apply to transactions with individual plan participants if the only funding vehicle for a tax-qualified employer sponsored plan is a deferred variable annuity.[20] NASD disagreed and in its response to comments stated that the proposed rule would apply if a registered representative recommends the deferred variable annuity in the plan to an individual plan participant. It noted, however, that only communications constituting a ''recommendation'' would trigger application of the rule.

A number of commenters asked NASD to clarify that the rule would not apply to premiums paid into a deferred variable annuity after the initial purchase and to subsequent purchase payments.[21] As it noted in its response to comments, NASD has modified the proposed rule to specify that it ''does not apply * * * to funds paid after the initial purchase or exchange.''

One commenter asserted that the NASD has no basis for excluding an investor's reallocation of his or her subaccounts from the scope of the proposed rule.[22] This commenter believed that specific attention should be paid to the broker's obligation to oversee and reallocate sub-accounts

[8] Indeed, except to the extent that specific provisions in the proposed rule would govern, or unless the context otherwise requires, the provisions of the by-laws and rules and all other interpretations and policies of the NASD Board of Governors would be applicable to transactions in deferred variable annuities.

[9] In other words, the proposed rule would apply as to the individual plan participants to whom the member makes recommendations, but would not apply as to the plan sponsor, trustee or custodian regarding the plan-level selection of investment vehicles and options for such plans.

[10] NASD notes as well that a deferred variable annuity purchased to fund an IRA does not provide any additional tax deferred treatment of earnings beyond the treatment provided by the IRA itself. Accordingly, where a customer is purchasing a deferred variable annuity to fund an IRA, firms must ensure that the deferred variable annuity's features other than tax deferral make the purchase of the deferred variable annuity for the IRA appropriate.

[11] *See* Proposed Rule 2821(b).

[12] *See* Proposed Rule 2821(c).

[13] *See* Proposed Rule 2821(d).

[14] *See* Proposed Rule 2821(e).

[15] *See, e.g.*, North American Securities Administrators Association (''NASAA''), Patricia D. Struck, President and Wisconsin Securities Administrator (9/20/05); Pace Investor Rights Project (''Pace''), Barbara Black, Director (9/19/05); and Public Investors Arbitration Bar Association (''PIABA''), Rosemary J. Shockman, President (9/9/05).

[16] *See, e.g.*, America Council of Life Insurers (''ACLI''), Carl B. Wilkerson, Vice President & Chief Counsel (9/19/05); Committee of Annuity Insurers (''CAI''), W. Thomas Conner and Eric A. Arnold, Sutherland Asbill & Brennan LLP (9/19/05), National Association for Variable Annuities (''NAVA''), Michael P. DeGeorge, General Counsel (9/19/05); Securities Industry Association (''SIA''), Ira D. Hammerman, Senior Vice President and General Counsel (9/19/05); T. Rowe Price Investment Securities, Inc. (''T. Rowe Price''), Henry H. Hopkins, Darrell N. Braman and Sara McCafferty (9/19/05); and Wachovia Securities, LLC (''Wachovia''), Ronald C. Long, Senior Vice President (9/19/05).

[17] *See, e.g.*, ACLI; CAI; NAVA; and SIA.

[18] NASAA.

[19] NAVA.

[20] Lincoln Investment Planning (''Lincoln''), Deirdre B. Koerick, Vice President (9/19/05).

[21] CAI; Massachusetts Mutual Life Insurance Company (''Mass Mutual''); Jennifer B. Sheehan, Assistant Vice President and Counsel (9/19/05); NAVA; and Northwestern Mutual Investment Services (''NMIS''), Daniel A. Riedl, Senior Vice President and Chief Operating Officer (9/16/05).

[22] PIABA.

because brokers do not pay attention or fail to follow-up on a customer's subaccount investments, often allowing these accounts to flounder in unsuitable investments. NASD declined to take this suggestion, but noted that NASD Rule 2310 continues to apply to a customer's subaccount investments.

Another commenter stated that the rule should also apply to the sale of immediate variable annuities.[23] In response, NASD stated that the majority of variable annuity transactions currently are in deferred variable annuities, and that most of the problems NASD has uncovered have been associated with the purchase or exchange of deferred variable annuities. However, NASD also stated that it will continue to monitor sales practices relating to immediate variable annuities.

ii. Comments on Proposed rule 2821(b)—Recommendation Requirements

(a) General Comments

Several commenters urged NASD to eliminate the specific suitability requirements from paragraph (b) of the proposed rule.[24] Some commenters asserted that deferred variable annuities are too varied and complex to mandate specific criteria for determining suitability.[25] Others stated that NASD would need to clarify the level of knowledge that would be sufficient to support a registered representative's ''reasonable basis'' for believing the standards of paragraph (b) have been met with respect to a particular customer.[26]

(b) Comments on Proposed Rule 2821(b)(1)(A)—Deferred Variable Annuity's Material Features

The rule, as originally proposed, would have required members to have a reasonable basis to believe that the customer has been informed of the material features of a specific deferred variable annuity before recommending it. Commenters criticized this provision, arguing that it would amount to a de facto requirement to provide written disclosure to customers[27] Commenters asserted that this disclosure along with the other disclosures already provided to investors in deferred variable annuities would be redundant and would overwhelm investors.[28]

A few commenters supported a mandatory plain English summary and an industry-wide or product specific Q&A that would answer basic questions about fees, taxes, liquidity and other issues.[29] While one commenter requested that NASD wait and consider the proposed rule after the Commission acts on its ''point of sale'' rule proposal.[30] another stated that the ''point of sale'' disclosure form would not be a substitute for a ''plain English'' risk disclosure.[31]

Some commenters opined that the rule would be more effective if it required a registered representative to direct the customer to the variable annuity synopsis, fee table and risk disclosure in the prospectus.[32] Others argued that if NASD and the Commission believe that the prospectus is inadequate, the solution would be to revise the prospectus rather than to require additional disclosures.[33]

While noting in its response to comments that numerous commenters sought to eliminate this provision, NASD modified it to no longer require product-specific disclosure. As revised, the proposed rule would require a registered representative to have a reasonable belief that the customers has been informed of the material features of deferred variable annuities in general. NASD cautioned, however, that this modification would not mean that a firm and its associated person may ignore product-specific features. It noted that the firm and its associated person must be capable of discussing the specific features of the deferred variable annuity under consideration, and must know these features in order to adequately perform a suitability analysis.

The proposed rule would have required a registered representative to document and sign the determinations that he or she has made pursuant to the proposed rule's recommendation requirements. Some commenters criticized this requirement, noting that neither the rule nor the release described what the documentation should look like or how detailed it should be.[34] Another commenter supported this requirement, opining that it would serve the dual purpose of creating a regulatory paper trail and reminding NASD members of the serious analytical undertaking involved in recommending a deferred variable annuity.[35] After considering the comments, NASD has determined to retain the requirement.

(c) Comments on Proposed Rule 2821(b)(1)(B)—Long-Term Investment Objective

The rule, as originally proposed, would have required members recommending a deferred variable annuity to have a reasonable belief that the customers had a long-term investment objective. Commenters asserted that an investor's time horizon does not have to be long-term in all circumstances for a deferred variable annuity to be suitable, noting that some deferred variable annuities have features that can benefit a customer regardless of age and potential for a long term investment.[36] Some commenters stated that an investor's time horizon should be one factor in a suitability analysis, but that a deferred variable annuity should not be deemed *per se* unsuitable based on that factor alone.[37]

[23] NASAA.

[24] *See, e.g.,* Association for Advanced Life Underwriting/National Association of Insurance and Financial Advisers (''AALU/NAIFA''), Gary A. Sanders, Senior Counsel (9/19/05); ACLI; Intersecurities, Inc. (''Intersecurities''), Thomas R. Moriarty, President (9/16/05); NAVA; SIA; and World Group Securities, Inc. (''World Group''); Leesa M. Easley, Chief Legal Officer (9/8/05).

[25] HD Vest Financial Services (''HD Vest''), Roger C. Ochs, President (9/20/05); Investment Company Institute (''ICI''), Frances M. Stadler, Deputy Senior Counsel (9/19/06); and T. Rowe Price.

[26] Associated Securities Corporation (''Associated Securities''), Denise M. Evans, General Counsel (9/19/05); Lincoln; and Pacific Select Distributors, Inc. (''Pacific Distributers''), John L. Dixon, President (9/16/05).

[27] *See, e.g.,* American Bankers Insurance Association/ABA Securities Association (''ABIA/ABASA''), Beth L. Climo, Executive Director (9/20/06); ACLI; A.G. Edwards & Sons, Inc. (''A.G. Edwards''), Thomas M. Vacovino, Vice President (9/20/05); HD Vest; ING; Intersecurities; NAVA; SIA; and Wachovia.

[28] AALU/NAIFA; ACLI; Intersecurities; NAVA; SIA; and World Group. Commenters pointed out that investors already receive a prospectus and state-mandated disclosures and may in the future receive an SEC-mandated point of sale disclosure form.

[29] MWA Financial Services (''MWA''), Pamela S. Fritz, Chief Compliance Officer (3/18/05); NASAA; and Pace.l

[30] National Planning Holdings, Inc. (''National Planning''), M. Shawn Dreffein, President and Chief Executive Officer (9/9/05). For details regarding the Commission's point of sale rule proposal, *see,* Securities Exchange Act Release No. 49148, (January 29, 2004), 69 FR 6438 (February 10, 2004) and Securities Exchange Act Release No. 51274 (Feb. 28, 2005), 70 FR 10521 (March 1, 2005). Securities Exchange Act Release No. 51274 (Feb. 28, 2005), 70 FR 10521 (March 1, 2005) (''Supplemental Release'').

[31] Pace.

[32] ABIA./ABASA; ACLI; A.G. Edwards; HD Vest; ING; NAVA; SIA; Wachovia; and World Group.

[33] ACLI and World Group.

[34] *See, e.g.,* ACLI; HD Vest; ING; NAVA; and SIA.

[35] Pace.

[36] A.G. Edwards; CAI; Fintegra Financial Solutions (''Fintegra''), Kenneth M. Cherrier, Chief Compliance Officer (8/11/05); HD Vest; ING; Intersecurities; Lincoln; NMIS; NAVA; New York Life Insurance and Annuity Corporation (''NY Life''), John R. Meyer, Senior Vice President (9/19/05); SIA; United Planners Financial Services of America (''United Planners), Julie Gebert, Vice President and Chief Compliance Officer (9/19/06); and World Group.''

[37] Fintegra; Financial Services Institute (''FSI''), Dale E. Brown, Executive Director (9/19/05); Great American Advisors (''Great American''), Shawn M. Mihal, Chief Compliance Officer (9/19/05); HD

Continued

In response to comments, NASD deleted this provision from paragraph (b) of the proposed rule and all references to long-term investment objectives in paragraph (c) (''Principal Review and Approval'') and paragraph (d) (''Supervisory Procedures''). In addition, NASD stated that in general, deferred variable annuities are appropriate only for customers with long-term investment objectives who intend to take advantage of tax-deferred accumulation and annuitization. Although NASD recognized that some deferred variable annuities have shorter holding periods and smaller surrender fees than traditional deferred variable annuities, it stated that a deferred variable annuity is suitable for an investor without a long-term investment objective only in rare cases. NASD also ''strongly cautioned'' firms to scrutinize any deferred variable annuity transaction involving customers without long-term investment objectives and to carefully document any analysis in favor of recommending such a transaction.

(d) Comments on Proposed Rule 2821(b)(1)(C)—Need for the Product as Compared With Other Investment Vehicles

As originally proposed, the rule would have required members to have a reasonable belief that the customer had a need for the deferred variable annuity as compared with other investment vehicles. Many commenters criticized this provision.[38] Some stated that while customers may ''benefit'' from a deferred variable annuity, no customer ''needs'' one.[39] Some viewed the standard as subjective and overreaching, stating that it would require a determination that a deferred variable annuity is the sole, unique investment to satisfy the needs of a customer.[40] Commenters also questioned what other investment vehicles would have to be compared with the deferred variable annuity[41] and whether a registered representative would have to compare the deferred variable annuity to products that he or she is not licensed to sell.[42]

NASD noted in its response to comments that it did not intend to require firms to perform a side-by-side comparison of a deferred variable annuity with other investment vehicles or require firms to prove that the customer needed the deferred variable annuity to the exclusion of all other investments. Instead, NASD intends to require firms to analyze whether the customer would benefit from the unique features of a deferred variable annuity. To clarify this, NASD eliminated the references in the proposed rule to ''need'' and ''as compared with other investment vehicles.'' As revised, the rule would require a member or associated person to have a reasonable basis to believe that ''the customer would benefit from the unique features of a deferred variable annuity (e.g., tax-deferred growth, annuitization or a death benefit)''.

(e) Comments on proposed Rule 2921(b)(2)—Customer Information

As originally proposed, the rule would have required members to make reasonable efforts to obtain from a customer a variety of information, including age, financial situation, liquid net worth and intended use of the deferred variable annuity. Some commenters urged NASD to delete this provision, stating that NASD Rules 2310 and 3110, as well as Rule 17a–3(17)(i)(A) of the Act, should govern the information that members are required to gather in making recommendations to purchase or exchange deferred variable annuities.[43]

Commenters also criticized a number of the terms used in this provision. Some viewed the terms ''financial situation'' and ''liquid net worth'' as vague and redundant.[44] Others questioned what constitutes a legitimate intended use of a deferred variable annuity[45] and whether ''other insurance holdings'' would be limited to life insurance or would also encompass automobile and health insurance.[46] One commenter also inquired whether a registered representative must look to liquidity needs at the time of the sale or in the future and whether investment experience means experience in deferred variable annuities or overall investment experience.[47]After considering the comments, NASD has determined to retain this paragraph with limited revisions.

iii. Comments on Proposed Rule 2821(c)—Principal Review and Approval

The rule, as originally proposed, would have required principals to review and approve the purchase or exchange of a deferred variable annuity before the customer's application was transmitted to the issuing insurance company for processing, regardless of whether the transaction was recommended.

(a) General Comments

Several commenters viewed the proposed principal review requirement as unduly duplicative of NASD Rule 3110.[48] Some stated that the proposed timing requirement and additional standards for principal review would be disruptive for firms that use automated systems to approve transactions that meet established criteria,[49] and one suggested requiring manual principal review only when an application does not meet a firm's standard criteria.[50]

(b) Comments on Proposed Rule 2821(c)(1)—Timing of Principal Review

Two commenters supported the proposed provisions relating to the timing of principal review, stating that it would ensure that a principal would have sufficient time for a complete review while providing greater assurances that unsuitable transactions would not be consummated.[51] Numerous commenters, however, objected to the principal review deadline.[52] Some were concerned that members would be subject to liability for market changes during the delay for supervisory review.[53] Others stated that the timing deadline would require costly reprogramming of broker-dealers' electronic processing systems that forward contracts to the insurance company and the broker's home office at the same time.[54]

One commenter stated that the interaction of this provision with other Commission and NASD rules could limit a firm's ability to review applications thoroughly.[55] Another stated that time-linking the application process with supervisory review would

Vest; MWA; NMIS; National Planning; Pacific Select; United Planners; and World Group.

[38] *See, e.g.,* ACLI; CAI; HD Vest; NAVA; Pacific Select; United Planners; and World Group.

[39] ACLI; CAI; NAVA; and ICI. Some commenters also stated that these provisions conflict with NASD's longstanding concerns about product comparisons.

[40] A.G. Edwards; Intersecurities; NMIS; NY Life; SIA; and World Group.

[41] ACLI; CAI; ICI; ING; Mass Mutual; and NAVA.

[42] Intersecurities and World Group.

[43] National Planning; NAVA; NMIS; and Pacific Select.

[44] NAVA and NY Life.

[45] Associated Securities and FSI. Another commenter asked if these terms were the same as the investment objective. Lincoln.

[46] *See, e.g.,* 1717 Capital Management Company and Nationwide Securities, Inc. (''1717 Capital''), Lance A. Reihl, President (9/19/05); AALU/AIFA; ACLI; CAI; NAVA; NMIS; and NY Life.

[47] Lincoln.

[48] *See, e.g.,* ACLI; Lincoln; Mass Mutual; NAVA; and SIA.

[49] CAI and NAVA.

[50] NAVA.

[51] NASAA and PIABA.

[52] *See, e.g.,* ACLI; CAI; ING; and NAVA.

[53] Associated Securities; Pacific Direct; and United Planners.

[54] CAI and NMIS.

[55] ING.

impair the goal under the Investment Company Act of 1940's for timely processing.[56] Some commenters stated that a delay in pricing the contract would be unfair to investors.[57]

Two commenters recommended that NASD require the review to be completed prior to the insurance company issuing the contract.[58] One of these commenters noted that while this would require logistical coordination between the principal and the issuer, it would allow insurers to process applications coextensively with the supervisory review, but before the security is issued.[59] Others recommended requiring principals to conduct their review and approval promptly after the completion of the contract application and in accordance with procedures reasonably designed to ensure that problematic purchases are detected and disapproved.[60]

A few commenters stated that the time deadline would not work in the context of direct sales, in which an insurance company may not know of an applicant's interest in a deferred variable annuity until it receives the application.[61] Another stated that the timing deadline would not take into account situations in which the registered principal is housed in the insurance company.[62]

A few commenter also stated that their current supervisory structure as an Office of Supervisory Jurisdiction would be incapable of dealing with the prior approval requirement and they would be forced to eliminate this form of supervisory structure.[63] One commenter stated the requirement could overwhelm principals,[64] and another stated that it would require members to allocate two to three times the supervisory staff for deferred variable annuities than for any other product.[65]

NASD responded to commenters' concerns by modifying the timeframe for principal review from ''prior to transmitting a customer's application for a deferred variable annuity to the issuing insurance company'' to ''no later than two business days following the date when a member or person associated with a member transmits a customer's application for a deferred variable annuity to the issuing insurance company for processing.'' It stated that requiring completion of the principal review within two business days of the firm's transmittal of the application to the insurance company is necessary for the protecting of investors and should promote efficiency. It also noted that the proposed rule would not preclude firms from using automated supervisory systems, or a mix of automated and manual supervisory systems, to facilitate compliance with the rule. In addition, NASD delineated what, at a minimum, a principal would need to do if his or her firm intends to rely on automated supervisory systems to comply with the proposed rule. Specifically, a principal would need to (1) approve the criteria that the automated supervisory system uses, (2) audit and update the system as necessary to ensure compliance with the proposed rule, (3) review exception reports that the system creates, and (4) remain responsible for each transaction's compliance with the proposed rule. Finally, NASD noted that a principal would be responsible for any deficiency in the system's criteria that would result in the system not being reasonably designed to comply with the rule.

NASD also noted that commenters asked whether the principal review would need to start, but not necessarily be completed, by the time specified in the rule. In most circumstances, NASD stated that under the revised timing requirement for principal review firms would be able to determine the appropriateness of the transactions before the insurance company issues the contract. In NASD's view, requiring completion of the principal review with this time period is necessary for the protection of investors. Moreover, it also believes that requiring a thorough principal review at the early stages of the process also should promote efficiency.

(c) Comments on Proposed Rule 2821(c)(1)—Specific Standard for Principal Review

Commenters objected to the proposed requirements for members to establish standards regarding age, liquidity needs and the dollar amount involved in the transactions and questioned the need for such standards.[66] While some requested more clarification of appropriate standards, others stated that NASD should mandate specific standards.[67] One commenter criticized permitting firms to individually set their own standards, stating that firms would defend suitability challenges by asserting that the transaction met their own standards.[68] Others expressed concern that without defined standards, a firm's suitability decisions would be second guessed and there would be inconsistent regulation as different NASD districts establish and impose different standards.[69] One commenter stated that the provision would lead principals to emphasize two or three elements of a customer's profile rather than considering all of the facts and circumstances.[70]

In its response to comments, NASD stated that the particular provisions requiring members to establish standards were never intended to require the adherence to brightline standards. It noted that the establishment of specific thresholds in these instances would unnecessarily limit a firm's discretion in establishing procedures that adequately address its overall operations. NASD intended for principals to consider these factors as part of their facts and circumstances review. As a result, NASD deleted the requirement for firms to establish standards for age, liquidity needs and dollar amounts.

(d) Comments on Proposed Rule 2821(c)(1)—Non-Recommended Transactions

Some commenters objected to requiring principal review of transactions that are not recommended,[71] and one noted that the information that would be needed for a principal review is not currently required to be collected for non-recommended annuity transactions.[72] Another commenter stated that requiring review for non-recommended transactions would allow principals to second guess investors' decisions.[73]

NASD disagreed, noting that due to the complexity of the products, it is appropriate to require firms to review all deferred variable annuity transactions for problematic sales practices. It stated that the proposed rule would create requirements to ensure that firms perform a consistent, baseline analysis of transactions, irrespective of whether the customer purchased the deferred variable annuity as a result of an associated person's

[56] ACLI.

[57] ACLI; Pacific Select; and United Planners.

[58] ACLI and NY Life.

[59] ACLI.

[60] CAI and NMIS.

[61] CAI; NAVA; and T. Rowe Price.

[62] NMIS.

[63] Great American and ING.

[64] Wachovia.

[65] Associated Securities.

[66] *See, e.g.,* Associated Securities; Dominion Investor Services, Inc. (''Dominion''), Kevin P. Takacs, Chief Compliance Officer (9/9/05); FSI; Great American; ING; Intersecurities; Pacific Select; and United Planners.

[67] Associated Securities; Dominion; FSI; Fintegra; Great American; MWA; and Wachovia.

[68] Pace.

[69] *See, e.g.,* ABIA/ABASA; Associated Securities; Dominion; FSI; Great American; and ING.

[70] Intersecurities.

[71] *See, e.g.,* ICI; NMIS; and T. Rowe Price.

[72] T. Rowe Price.

[73] ICI and NMIS.

recommendation, thereby enhancing investor protection for all customers.

(e) Comments on Proposed Rule 2821(c)(1)(D)—Rate of Exchanges

Two commenters criticized the proposed provision that would require principals to consider whether the customer's account had a deferred variable annuity exchange within the preceding 36 months, stating it could signal to registered representatives that exchanges occurring more than 36 months apart are appropriate.[74] One commenter stated that, while a firm should generate reports and review a registered representative's sales activity for patterns of inappropriate replacements as part of its supervisory procedures, it should not be required to approve each transaction.[75] After considering the comments, NASD has determined to retain the requirement.

iv. Comments on Proposed Rule 2821(d)—Supervisory Procedures

The rule, as originally proposed, would require members to establish and maintain specific written supervisory procedures reasonably designed to achieve compliance with the rule. Members would be required to implement procedures to screen transactions and require registered principals to consider all of the factors enumerated in paragraph (c) of the proposed rule. They would also have to consider whether the associated person effecting a transaction has a particularly high rate of effecting deferred variable annuity exchanges.

One commenter supported requiring registered principals to review the total production attributable to variable annuities of associated person.[76] One commenter requested guidance as to what a ''particularly high rate'' refers to and what must be compared to determine it.[77] After considering the comments, NASD determined to retain without modification the provision relating to high rates of exchange.

v. Comments on Proposed Rule 2821(e)—Training

Most of the commenters that addressed the training provision supported it.[78] However, one commenter questioned the need for a specific training requirement and requested clarification regarding what additional training is contemplated.[79] Some suggested that the training obligations in the proposed rule could be met through existing ''Firm Element'' programs.[80] After considering the comments, NASD determined to retain this requirement.

(f) Comments on the Effective Date of Proposed Rule 2821

NASD stated that the effective date of the proposal would be 120 days following publication of its *Notice to Members* announcing Commission approval. Numerous commenters requested more time, from 180 days[81] to no less than one year,[82] to comply with the proposed rule. In its response to comments, NASD stated that because some firms likely will have to make operational changes, it would be appropriate to provide additional time for members to comply with the rule, if approved. As a result, NASD stated that the proposed rule's effective date would be 180 days following publication of the *Notice to Members* in which it announces Commission approval.

2. Statutory Basis

NASD believes that the proposed rule is consistent with the provisions of Section 15A(b)(6) of the Act,[83] which requires, among other things, that NASD rules be designed to prevent fraudulent and manipulative acts and practices, to promote just and equitable principles of trade and, in general, to protect investors and the public interest. NASD believes that the proposed rule is consistent with the provisions of the Act noted above in that it will enhance firms' compliance and supervisory systems and provide more comprehensive and targeted protection to investors in deferred variable annuities. As such, the proposed rule will decrease the likelihood of fraud and manipulative acts, promote just and equitable principles of trade and increase investor protection.

B. Self-Regulatory Organization's Statement on Burden on Competition

NASD does not believe that the proposed rule will result in any burden on competition that is not necessary or appropriate in furtherance of the purposes of the Act.

C. Self-Regulatory Organization's Statement on Comments on the Proposed Rule Received from Members, Participants, or Others

The Commission published proposed rule 2821 (SR–NASD–2004–183) in the **Federal Register** on July 21, 2005. The comment period closed on September 19, 2005. The Commission received nearly 1500 comment letters in response to the **Federal Register** publication of the SR–NASD–2004–183. The comment letters and NASD's response to them are discussed in section II above.

III. Date of Effectiveness of the Proposed Rule and Timing for Commission Action

Within 35 days of the date of publication of this notice in the **Federal Register** or within such longer period (1) as the Commission may designate up to 90 days of such date if it finds such longer period to be appropriate and publishes its reasons for so finding or (ii) as to which the self-regulatory organization consents, the Commission will:

(A) By order approve such proposed rule, or

(B) Institute proceedings to determine whether the proposed rule should be disapproved.

IV. Solicitation of Comments

Interested persons are invited to submit written data, views and arguments concerning Amendment No. 2, including whether the proposed rule is consistent with the Act.[84] We also invite interested persons to discuss how, if at all, the proposed rule's timing requirement for principal review would impact member firms' ability to efficiently review deferred variable annuity transactions. What changes, if any, would member firms need to make to their supervisory procedures and systems in order to comply with the proposed rule's timing requirement for principal review? If changes would be necessary, we invite interested persons to discuss how current supervisory procedures and systems operate and why those procedures and systems would not accommodate the proposed rule's timing requirement for principal review.

Comments may be submitted by any of the following methods:

[74] Intersecurities and World Group.

[75] Intersecurities.

[76] NASAA.

[77] Wachovia.

[78] *See, e.g.,* FSI; Great American; Lincoln; Mass Mutual; MWA; NAVA; and PIABA.

[79] ING.

[80] *See, e.g.,* Pacific Select; United Planners; and Wachovia. NASD Rule 1120(b) requires each member to establish a training plan that identifies certain minimum requirements. Each year the firm must prepare a written training plan after an analysis of its training needs. Firms must consider certain factors when conducting their analyses and in developing their training plans, such as the firm's size, organizational structure, scope and type of business activities, as well as regulatory developments. This training is referred to as the ''Firm Element'' portion of NASD's continuing education requirements.

[81] ING and Intersecurities.

[82] NAVA, SIA, and World Group.

[83] 15 U.S.C. 78o–3(b)(6).

[84] The Commission will consider the comments we previously received. Commenters may reiterate or cross-reference previously submitted comments.

Electronic Comments

- Use the Commission's Internet comment form (*http://www.sec.gov/rules/sro.shtml*); or
- Send an e-mail to *rule-comments@sec.gov.* Please include File Number SR –NASD–2004–183 on the subject line.

Paper Comments

- Send paper comments in triplicate to Nancy M. Morris, Secretary, Securities and Exchange Commission, 100 F Street, NE., Washington, DC 20549–1090.

All submissions should refer to File Number SR–NASD–2004–183. This file number should be included on the subject line if e-mail is used. To help the Commission process and review your comments more efficiently, please use only one method. The Commission will post all comments on the Commission's Internet Web site (*http://www.sec.gov/rules/sro.shtml*). Copies of the submission, all subsequent amendments, all written statements with respect to the proposed rule that are filed with the Commission, and all written communications relating to the proposed rule between the Commission and any person, other than those that may be withheld from the public in accordance with the provisions of 5 U.S.C. 552, will be available for inspection and copying in the Commisison's Public Reference Room. Copies of such filing also will be available for inspection and copying at the principal office of NASD.

All comments received will be posted without change; the Commission does not edit personal identifying information from submissions. You should submit only information that you wish to make available publicly. All submissions should refer to File Number SR–NASD–2004–183 and should be submitted on or before July 19, 2006.

For the Commission, by the Division of Market Regulation, pursuant to delegated authority.[85]

J. Lynn Taylor,

Assistant Secretary.

[FR Doc. 06–5730 Filed 6–27–06; 8:45 am]

BILLING CODE 8010–01–M

[85] 17 CFR 200.30–3(a)(12).

SECURITIES AND EXCHANGE COMMISSION

[Release No. 34–54028; File No. SR–NASD–2005–067]

Self-Regulatory Organizations; National Association of Securities Dealers, Inc.; Order Granting Approval to Proposed Rule Change and Amendment Nos. 1, 2, and 3 Thereto Relating to Amendments to NASD Rule 6530 To Clarify the Review Process for OTCBB Eligibility Determinations and To Implement Fees for Such Review

June 21, 2006.

On May 24, 2005, the National Association of Securities Dealers, Inc. (''NASD''), through its subsidiary, the Nasdaq Stock Market, Inc. (''Nasdaq''), filed with the Securities and Exchange Commission (''Commission''), pursuant to section 19(b)(1) of the Securities Exchange Act of 1934 (''Act'') [1] and Rule 19b–4 thereunder,[2] a proposed rule change to amend NASD Rules 6530 and 7010 to clarify the availability of a process to review a determination of an issuer's eligibility under NASD Rule 6530 for continued quotation of its securities on the Over-the-Counter Bulletin Board (''OTCBB'') and seek review of such determination. On September 27, 2005, Nasdaq filed with the Commission Amendment No. 1 to the proposed rule change.[3] On December 8, 2005, NASD filed with the Commission Amendment No. 2 to the proposed rule change,[4] and on February 23, 2006, NASD filed with the Commission Amendment No. 3 to the proposed rule change.[5] The proposed rule change, as amended, was published for comment in the **Federal Register** on March 31, 2006.[6] No comments were received on this proposal. This order approves the proposed rule change, as amended.

[1] 15 U.S.C. 78s(b)(1).

[2] 17 CFR 240.19b–4.

[3] In Amendment No. 1, NASD removed the record-keeping fee it had originally proposed to establish in NASD Rule 7010.

[4] In Amendment No. 2, NASD amended the filing to reflect the Commission's approval of a separate proposed rule change in which NASD amended its Plan of Allocation and Delegation of Functions by NASD to Subsidiaries, as well as certain corresponding NASD rules, to permit NASD to assume direct authority for OTC equity operations, including the OTCBB, rather than continuing to delegate this authority to Nasdaq. *See* Securities Exchange Act Release No. 52508 (September 26, 2005); 70 FR 57346 (September 30, 2005) (SR–NASD–2005–089).

[5] In Amendment No. 3, which replaced and superseded the prior filings in their entirety, NASD clarified the availability of the hearing process set forth in proposed NASD Rule 6530(f) in the event that an OTCBB security is subject to removal from the OTCBB under NASD Rule 6530(e)(1) and made clarifying changes relating to the application of the NASD Rule 9700 Series to hearings conducted to determine the security's eligibility for quotation on the OTCBB.

I. Description of the Proposal

Recently, the Commission approved NASD Rule 6530(e), which limits the eligibility for quotation on the OTCBB of the security of an issuer that is repeatedly late or otherwise delinquent in filing periodic reports to the issuer's respective regulator.[7] Specifically, NASD Rule 6530(e) provides that an NASD member will not be permitted to quote a security on the OTCBB: (1) If the issuer has failed to file a complete required report with the Commission or other respective regulator by the due date for such report (even if it later files within the grace period allowed by NASD Rule 6530(a)) three times in the prior two-year period; or (2) if the security has been removed from the OTCBB due to the issuer's failure to file a complete required report two times in the prior two-year period. Following the removal of an issuer's security pursuant to NASD Rule 6530(e), such security shall not be eligible for quotation on the OTCBB by an NASD member until such time as the issuer has timely filed in a complete form all required periodic due in a one-year period.

NASD's proposed revisions to NASD Rule 6530 would set forth procedures for an aggrieved party to request a review by a hearing panel, pursuant to the NASD Rule 9700 Series, of a determination by NASD that an issuer is ineligible for continued quotation on the OTCBB. The proposed rule change also would set forth the process for an aggrieved party to request review of the hearing panel's decision. In addition, the proposal would require an aggrieved party to pay a fee of $4,000 when requesting either a review by the hearing panel or a review of the hearing panel's decision. Finally, the proposal would codify the notification requirements to which NASD would adhere in the event that an issuer's security approaches the point of removal from quotation on the OTCBB for failure to comply with the provisions of NASD Rule 6530.

II. Discussion and Commission Findings

The Commission finds that the proposed rule change, as amended, is consistent with the provisions of section

[6] *See* Securities Exchange Act Release No. 53546 (March 24, 2006), 71 FR 16350 (''Notice'').

[7] *See* Securities Exchange Act Release No. 52786 (November 16, 2005), 70 FR 70907 (November 23, 2005) (SR–NASD–2005–011).

15A(b)(6) of the Act,[8] which requires, among other things, that NASD rules must be designed to prevent fraudulent and manipulative acts and practices, to promote just and equitable principles of trade, and, in general, to protect investors and the public interests.[9]

Under the proposal, upon determining that an issuer's security would become ineligible for quotation under NASD Rule 6530, NASD would send a notice to the address appearing on the issuer's most recent periodic report at least seven calendar days prior to the security's removal from the OTCBB, even if there is no applicable grace period.[10] The notice would indicate the removal date for the issuer's security after any applicable grace period, unless the condition causing the ineligibility has been cured by the expiration of any applicable grace period.[11] The Commission believes that the proposed notice is reasonably designed to inform issuers of the imminent removal of their securities from OTCBB quotation.

The proposed rule change codifies the right of an aggrieved party to request a review of a determination by NASD that an issuer's security is ineligible for continued quotation on the OTCBB, pursuant to the procedures set fourth in the NASD Rule 9700 Series as modified by the proposed rule change. The proposal also implements at $4,000 fee for such review.[12] The proposed rule change specifies that the hearing panel is limited to determining whether the issuer's security is eligible for continued quotation and/or whether the issuer filed a complete report by the applicable due date, taking into account any extensions permitted under Rule 12b–25 under the Act.[13]

The Commission believes that scope of the review is reasonably limited and tailored to reflect the requirements of NASD Rule 6530. In particular, the only matters subject to review are whether the OTCBB issuer filed a complete report by the applicable due date, taking into account any extensions pursuant to Rule 12b–25 under the Act, and whether the issuer's security is eligible for continued quotation.[14] The Commission further believes that providing for an aggrieved party's right to request review in NASD Rule 6530 will promote clarity and transparency of that process.

A request for a hearing under the proposed rule would temporarily stay a security's removal until the hearing panel makes its determination. An aggrieved party's request for review by the hearing panel would not prevent the issuer's delinquency from being counted as an occurrence for the purposes of NASD Rule 6530(e)(1), although the issuer's security would remain eligible for continued and uninterrupted quotation until such time as the hearing panel issues its opinion. In addition, the proposal would clarify that an aggrieved party may appeal the hearing panel's decision pursuant to NASD Rule 9760. Unlike the initial request for hearing panel review, the request for an appeal of the hearing panel's decision would not stay the security's removal.[15] The issues on appeal would be limited to whether the issuer's security, at the time of the initial review by the hearing panel, was eligible for quotation on the OTCBB and/or whether the issuer filed a complete report by the applicable due date, taking into account any extensions pursuant to Rule 12b–25 under the Act. The Commission believes that the proposed rule change is reasonably designed to provide appropriate procedures for an aggrieved party to seek a review by the hearing panel and to appeal the hearing panel's decision.

The Commission notes that NASD currently does not provide for a fee to offset the costs to conduct hearings regarding a security's eligibility for quotation on the OTCBB pursuant to the NASD Rule 9700 Series. The proposed rule change would implement a $4,000 fee for aggrieved parties who request review by a hearing panel, as well as a $4,000 fee for aggrieved parties who seek review of the hearing panel's decision.[16] Given the increasing number of hearings relating to OTCBB eligibility,[17] the Commission believes that it is reasonable for NASD to adopt a fee to offset the costs associated with the conduct of the hearings and appeals process under the NASD Rule 9700 Series for parties aggrieved by a determination made under NASD Rule 6530.

III. Conclusion

It is therefore ordered, pursuant to section 19(b)(2) of the Act,[18] that the proposed rule change (SR–NASD–2005–067), as amended, be, and it hereby is, approved.

For the commission, by the Division of Market Regulation, pursuant to delegated authority.[19]

J. Lynn Taylor,

Assistant Secretary.

[FR Doc. 06–5756 Filed 6–27–06; 8:45 am]

BILLING CODE 8010–01–M

[8] 15 U.S.C. 78*o*–3(b)(6).

[9] In approving this proposed rule change, as amended, the Commission notes that it has considered the proposed rule's impact on efficiency, competition, and capital formation. *See* 15 U.S.C. 78c(f).

[10] Under NASD Rule 6530(e), the securities of an issuer are removed from the OTCBB the third time that the issuer fails to file a required report by the due date (including, if applicable, any extension permitted by Rule 12b–25 of the Exchange Act (17 CFR 240.12b–25)) in a two-year period, without the benefit of the grace period for the third delinquency. Prior to removal of the security from the OTCBB, however, NASD would provide seven calendar days to allow an aggrieved party to request a review of such determination by a hearing panel. As such, where an issuer's security would be removed for the issuer's failure to file a required report by the due date for the third time in a two-year period, NASD would provide seven calendar days (not the 30 or 60 day grace period provided in NASD Rule 6530(a)) to allow an aggrieved party time to request a hearing. *See* Securities Exchange Act Release No. 52786 (November 16, 2005), 70 FR 70907 (November 23, 2005) (SR–NASD–2005–011). NASD's proposal to amend NASD Rule 6530(e) and (f) would codify this procedural framework.

[11] If an issuer's security becomes ineligible for failure to file by the due date for the third time in a two-year period, the issuer would not be able to cure the condition causing the ineligibility. *See* Securities Exchange Act Release No. 52786 (November 16, 2005), 70 FR 70907 (November 23, 2005) (SR–NASD–2005–011).

[12] Although NASD currently permits aggrieved parties to request a review of a determination of ineligibility pursuant to the NASD Rule 9700 Series, the proposed rule change would provide for that right in the rule governing OTCBB-eligible securities, NASD Rule 6530.

[13] The proposed rule specified that hearings will be conducted via telephone, and that NASD will provide the aggrieved party with at least five business days notice of the hearing unless the aggrieved party waives such notice.

[14] In the case of OTCBB issuers who file regulatory reports with a regulator other than the Commission (*e.g.,* Federal banking regulators), the Commission notes that NASD generally receives notice of a regulatory filing from the applicable market maker or the issuer itself. Accordingly, these issuers can help to alleviate any confusion regarding whether a filing has been timely made by providing NASD with a copy of the applicable filing made with the appropriate regulator on or before its due date.

[15] The proposed rule change further notes that review of the hearing panel decision will be based on the written record, unless further hearings are ordered. If further hearings are ordered, they will be conducted via telephone.

[16] In comparison, NASD Rule 4805(c) requires Nasdaq-listed issuers to submit a $4,000 fee for a hearing on the written record and a $5,000 fee for an oral hearing to cover the cost of holding the hearing, and NASD Rule 4807(a) requires Nasdaq-listed issuers to submit a fee of $4,000 to cover the cost of review by the Nasdaq Listing and Hearing Review Council.

[17] *See* Notice, *supra* note 6, at 16352 n.19 (noting that the number of hearing requests received by NASD from OTCBB issuers increased from 14 requests in 2003 to 124 requests in 2005).

[18] 15 U.S.C. 78s(b)(2).

[19] 17 CFR 200.30–3(a)(12).

SECURITIES AND EXCHANGE COMMISSION

[Release No. 34–54024; File No. SR–NYSE–2006–44]

Self-Regulatory Organizations; New York Stock Exchange LLC; Notice of Filing and Immediate Effectiveness of Proposed Rule Change Relating to Specialist Algorithmic Quoting Messages Permitted Pursuant to Exchange Rule 104

June 21, 2006.

Pursuant to section 19(b)(1) of the Securities Exchange Act of 1934 (''Act'') [1] and Rule 19b–4 thereunder,[2] notice is hereby given that on June 20, 2006, the New York Stock Exchange LLC (''NYSE'') or ''Exchange'') filed with the Securities and Exchange Commission (''Commission'') the proposed rule change as described in Item I and II below, which Items have been prepared by the Exchange. NYSE filed the proposed rule change pursuant to section 19(b)(3)(A) of the Act [3] and Rule 19b–4(f)(6) thereunder,[4] which renders the proposed rule change effective upon filing with the Commission. The Commission is publishing this notice to solicit comments on the proposed rule change from interested persons.

I. Self-Regulatory Organization's Statement of the Terms of Substance of the Proposed Rule Change

NYSE proposes to amend Exchange Rule 104 (Dealings by Specialists) with respect to the specialists' ability to establish systems employing algorithms to send messages via a connection to the Display Book® system for the purpose of updating quotations systematically. The text of the proposed rule change is available on the Exchange's Web site (*http://www.nyse.com*), at the Exchange's Office of the Secretary, and at the Commission's Public Reference Room.

II. Self-Regulatory Organization's Statement of the Purpose of, and Statutory Basis for the Proposed Rule Change

In its filing with the Commission, the Exchange included statements concerning the purpose of and basis for the proposed rule change and discussed any concerns it received on the proposed rule change. The text of these statements may be examined at the places specified in Item IV below. The Exchange has prepared summaries, set forth in Section A, B, and C below, of the most significant aspects of such statements.

A. Self-Regulatory Organization's Statement of the Purpose of, and Statutory Basis for, the Proposed Rule Change

1. Purpose

Under the NYSE HYBRID MARKET℠ initiative [5], the Exchange proposed several changes to the manner in which specialists on the Exchange would be able to establish electronic connections to the Display Book® [6] system (''Display Book'') to provide them with access to certain information and permit them to make a range of specified quoting and trading decisions based on that information. The Exchange proposed amendments to Exchange Rule 104 (Dealings by Specialists) to provide specialists with the ability to implement systems that use proprietary algorithms based on predetermined parameters to electronically participate in the Hybrid Market (''Specialist Algorithm''). The Specialist Algorithm is designed to communicate with the Display Book system via an Exchange-owned external application program interface (''API'').

As approved in the Hybrid Market initiative, the Specialist Algorithm is permitted to send messages to the Display Book via the API to quote or trade on behalf of the specialist's proprietary interest. The Specialist Algorithm will generate these quoting or trading messages in reaction to specific types of information it will have access to. This information includes specialist dealer position, existing quotes, publicly available information the specialist chooses to supply to the algorithm, incoming orders as they are entering Exchange systems, and information about orders on the display Book such as limit orders, percentage orders, stop orders, and auction limit and auction market orders. This latter information stream is known as ''state of the book'' information.

Since the approval of the Hybrid Market, the Exchange has continued to discuss Hybrid Market features with its members and advisory committees. Based on these discussions, the Exchange has decided to make changes to certain aspects of the Hybrid Market, to produce a trading venue that best addresses the various needs of its members and customers.

As part of the implementation of Phase II of the Hybrid Market, the Exchange is proposing that it have the ability to permit specialists to send quoting messages via the API in all securities without the specialists having access to information about incoming orders as they are entering Exchange systems. This is similar to the manner in which specialists are allowed to send quoting messages in exchange traded funds (''ETFs'') and Trust Issued Receipts today,[7] before the effectiveness of the full Hybrid amendments, except that the specialist systems would have access to state of the book information.

Exchange Rule 104 currently allows specialists to send quoting messages via the API in ETFs and Trust Issued Receipts. These specialists' algorithms do not have access to the state of the book information stream. The provision discussed in this filing will be superseded with the Exchange rule 104 amendments noted above when Phase II of the Hybrid Market is fully implemented.

The Exchange believes that use of the API to quote in this fashion will enable specialists and the Exchange to obtain valuable real time experience with respect to the use of specialist proprietary algorithms.

2. Statutory Basis

The Exchange believes that the proposed rule change is consistent with section 6(b) of the Act [8] in general, and furthers the objectives of section 6(b)(5) of the Act [9] in particular, in that it is designed to promote just and equitable principles of trade, to remove impediments to and perfect the mechanism of a free and open market and a national market system, and, in general, to protect investors and the public interest.

B. Self-Regulatory Organization's Statement on Burden on Competition

The Exchange does not believe that the proposed rule change will impose any burden on competition that is not necessary or appropriate in furtherance of the purposes of the Act.

[1] 15 U.S.C. 78s(b)(1).

[2] 17 CFR 240.19b–4.

[3] 15 U.S.C. 78s(b)(3)(A).

[4] 17 CFR 240.19b–4(f)(6).

[5] *See* Securities Exchange Act Release No. 53539 (March 22, 2006), 71 FR 16353 (March 31, 2006).

[6] The Display Book system is an order management and execution facility. It receives and displays orders to the specialist, contains the orders received by the specialist (the ''Book''), and provides a mechanism to execute and report transactions to the Consolidated Tape.

[7] Exchange Rule 104 was amended for this purpose in 2004. *See* Securities Exchange Act Release No. 50412 (September 20, 2004), 69 FR 57741 (September 27, 2004).

[8] 15 U.S.C. 78f(b).

[9] 15 U.S.C. 78f(b)(5).

C. Self-Regulatory Organization's Statement on Comments on the Proposed Rule Change Received From Members, Participants or Others

The Exchanges has neither solicited nor received written comments on the proposed rule change.

III. Date of Effectiveness of the Proposed Rule Change and Timing for Commission Action

Because the foregoing proposed rule change does not: (i) Significantly affect the protection of investors or the public interest; (ii) impose any significant burden on competition; and (iii) by its terms, become operative for 30 days from the date on which it was filed, or such shorter time as the Commission may designate if consistent with the protection of investors and the public interest, it has become effective pursuant to section 19(b)(3)(A) of the Act [10] and Rule 19b–4(f)(6) thereunder.[11]

A proposed rule change filed under Rule 19b–4(f)(6) normally may not become operative prior to 30 days after the date of filing. However, Rule 19b–4(f)(6)(iii) [12] permits the Commission to designate a shorter time if such action is consistent with the protection of investors and the public interest. The Exchange has requested that the Commission waive the 30-day operative delay and designate the proposed rule change immediately operative upon filing. The Commission believes that waiver of the 30-day operative delay is consistent with the protection of investors and the public interest because it would allow specialists to quote more efficiently. Accordingly, the Commission designates the proposal to be effective and operative upon filing with the Commission.[13]

IV. Solicitation of Comments

Interested persons are invited to submit written data, views and arguments concerning the foregoing, including whether the proposed rule change is consistent witht he Act. Comments may be submitted by any of the following methods:

Electronic Comments

- Use the Commission's Internet comment form (*http://www.sec.gov/rules/sro.shtml*); or
- Send an e-mail to *rule-comments@sec.gov.* Please include File Number SR–NYSE–2006–44 on the subject line.

Paper Comments

- Send paper comments in triplicate to Nancy M. Morris, Secretary, Securities and Exchange Commission, 100 F Street, NE., Washington, DC 20549–1090.

All submissions should refer to File Number SR–NYSE–2006–44. This file number should be included on the subject line if e-mail is used. To help the Commission process and review your comments more efficiently, please use only one method. The Commission will post all comments on the Commission's Internet Web site (*http://www.sec.gov/rules/sro.shtml*). Copies of the submission, all subsequent amendments, all written statements with respect to the proposed rule change that are filed with the Commission, and all written communications relating to the proposed rule change between the Commission and any person, other than those that may be withheld from the public in accordance with the provisions of 5 U.S.C. 552, will be available for inspection and copying in the Commission's Public Reference Room. Copies of such filing also will be available for inspection and copying at the principal office of the Exchange. All comments received will be posted without change; the Commission does not edit personal identifying information from submissions. You should submit only information that you wish to make available publicly. All submissions should refer to File Number SR–NYSE–2006–44 and should be submitted on or before July 19, 2006.

For the Commission, by the Division of Market Regulation, pursuant to delegated authority.[14]

J. Lynn Taylor,

Assistant Secretary.

[FR Doc. 06–5754 Filed 6–27–06; 8:45 am]

BILLING CODE 8010–01–M

[10] 15 U.S.C. 78s(b)(3)(A).

[11] 17 CFR 240.19b–4(f)(6).

[12] 17 CFR 240.19b–4(f)(6)(iii).

[13] For purposes only of waiving the 30-day operative delay, the Commission has considered the proposed rule's impact on efficiency, competition, and capital formation. 15 U.S.C. 78c(f).

[14] 17 CFR 200.30–3(a)(12).

SECURITIES AND EXCHANGE COMMISSION

[Release No. 34–54026; File No. SR–PCX–2005–115]

Self-Regulatory Organizations; Pacific Exchange, Inc. (n/k/a NYSE Arca, Inc.); Notice of Filing of a Proposed Rule Change and Amendment Nos. 1 and 2 Thereto Relating and Order Granting Partial Accelerated Approval To Trading Shares of the Funds of the ProShares Trust Pursuant to Unlisted Trading Privileges

June 21, 2006.

Pursuant to Section 19(b)(1) of the Securities Exchange Act of 1934 (''Act''),[1] and Rule 19b–4 thereunder,[2] notice is hereby given that on October 11, 2005, the Pacific Exchange, Inc. (n/k/a NYSE Arca, Inc.) (the ''Exchange''), through its wholly owned subsidiary PCX Equities, Inc. (n/k/a/ NYSE Arca Equities, Inc.) (''NYSE Arca Equities'' or the ''Corporation''), filed with the Securities and Exchange Commission (''Commission'') the proposed rule change as described in Items I and II below, which Items have been prepared by the Exchange.[3] The Exchange filed Amendment No. 1 to the proposed rule change on November 21, 2005.[4] The Exchange filed Amendment No. 2 to the proposed rule change on May 5, 2006.[5] The Commission is publishing this notice to solicit comments on the proposed rule change, as amended, from interested persons and is partially approving the proposal, as amended, on an accelerated basis.

I. Self-Regulatory Organization's Statement of the Terms of Substance of the Proposed Rule Change

The Exchange, through its wholly owned subsidiary NYSE Arca Equities, proposes to trade shares (''Shares'') of the following twelve funds of the ProShares Trust (f/k/a xtraShares Trust) (the ''Trust''): Ultra 500 Fund, Ultra 100 Fund, Ultra 30 Fund, Ultra Mid-Cap 400

[1] 15 U.S.C. 78s(b)(1).

[2] 17 CFR 240.19b–4.

[3] On March 6, 2006, the Pacific Exchange, Inc. (''PXC''), filed with the Commission a proposed rule change, which was effective upon filing, to change the name of the Exchange, as well as several other related entities, to reflect Archipelago's recent acquisition of PCX and the merger of the NYSE with Archipelago. *See* File No. SR–PCX–2006–24. All references herein have been changed to reflect these transactions. Telephone Conference between Lisa Dallmer, Direct, NYSE Arca Equities, Inc., and Florence E. Harmon, Senior Special Counsel, Division of Market Regulation (''Division''), Commission, on June 21, 2006.

[4] Amendment No. 1 replaced and superseded the original filing in its entirety.

[5] Amendment No. 2 replaced and superseded Amendment No. 1 in its entirety.

Fund, Short 500 Fund, Short 100 Fund, Short 30 Fund, Short Mid-Cap 400 Fund, Ultra Short 500 Fund, Ultra Short 100 Fund, Ultra Short 30 Fund and Ultra Short Mid-Cap 400 Fund (the ''Funds'') pursuant to unlisted trading privileges (''UTP'') and to amend NYSE Arca Equities Rule 9.2(a) (''Diligence as to Accounts'') to accommodate the trading of the Shares. While the Commission is publishing the Exchange's entire proposal for notice, the Commission is only approving, on an accelerated basis, the portion of the proposal pertaining to the trading, pursuant to UTP, of the Ultra 500 Fund, Ultra 100 Fund, Ultra 30 Fund, Ultra Mid-Cap 400 Fund, Short 500 Fund, Short 100 Fund, Short 30 Fund, Short Mid-Cap 400 Fund and the portion of the proposal pertaining to NYSE Arca Equities Rule 9.2(a) because the four remaining funds have not been approved for trading on the primary listing exchange, the American Stock Exchange LLC (''AMEX'').

The text of the proposed rule change appears below. Additions are in *italic.*

* * * * *

Rules of NYSE Arca Equities, Inc.

Rule 9

Conducting Business With The Public

Rule 9.2(a).

Diligence As To Accounts

(*1*) Every ETP Holder, through a general partner, a principal executive officer or a designated authorized person, shall use due diligence to learn the essential facts relative to every customer, every order, every account accepted or carried by such ETP Holder and every person holding power of attorney over any account accepted or carried by such ETP Holder.

(2) In recommending to a customer the purchase, sale or exchange of any security, an ETP Holder shall have reasonable grounds for believing that the recommendation is suitable for such customer upon the basis of any facts disclosed by the customer as to his other security holdings, financial situation and needs. Prior to the execution of a transaction recommended to a non-institutional customer (defined below), other than transactions with customers where investments are limited to money market mutual funds, an ETP Holder shall make reasonable efforts to obtain information concerning the customer's financial status, tax status, investment objectives, and such other information used or considered to be reasonable by such ETP Holder or registered representative in making recommendations to the customer.

(3) For purposes of this Rule, the term ''non-institutional customers'' shall mean a customer that does not qualify as an ''institutional account.'' The term ''institutional account'' means the account of a bank, savings and loan association, insurance company, registered investment company, investment adviser registered either with the Securities and Exchange Commission under Section 203 of the Investment Advisers Act of 1940 or with a state securities commission (or any agency or office performing like functions), or any other natural person or entity with total assets of at least $50 million.

* * * * *

II. Self-Regulatory Organization's Statement of the Purpose of, and Statutory Basis for, the Proposed Rule Change

In its filing with the Commission, the Exchange included statements concerning the purpose of, and basis for, the proposed rule change. The text of these statements may be examined at the places specified in Item III below, and is set forth in Sections A, B, and C below.

A. Self-Regulatory Organization's Statement of the Purpose of, and the Statutory Basis for, the Proposed Rule Change

I. Purpose

Under NYSE Area Equities Rule 5.2(j)(3), the Exchange may propose to list and/or trade pursuant to UTP ''Investment Company Shares.'' [6] With this filing, the Exchange proposes to trade pursuant to UTP the Shares of the Funds under NYSE Arca Equities Rule 5.2(j)(3). The Exchange represents that the Shares, which seek to provide investment results that exceed the daily performance of a specified stock index by a specified percentage or that seek to provide investment results that correspond to the inverse or opposite of the index's daily performance or twice the inverse or opposite (−200%) of the index's daily performance, qualify as Investment Company shares as defined in NYSE Arca Equities Rule 5.2(j)(3).[7] To accommodate the trading of the Shares, the Exchange is proposing to amend NYSE Arca Equities Rule 9.2(a) (''Diligence as to Accounts''), as more fully described below under the heading ''Information Bulletin.'' The Commission previously approved the original listing and trading of the Shares of eight of the Funds on the American Stock Exchange LLC (''Amex'').[8] A proposal to list and trade the Shares of the remaining four Funds has been filed with the Commission by Amex, but has not yet been approved by the Commission.[9]

Four of the Funds—the Ultra 500, Ultra 100, Ultra 30, and Ultra Mid-Cap 400 Funds (the ''Bullish Funds'')—seek daily investment results, before fees and expenses, that correspond to twice (200%) the daily performance of the Standard & Poor's 500® Index (''S&P 500''), the Nasdaq-100® Index (''Nasdaq 100''), the Dow Jones Industrial Average℠ (''DJIA''), and the S&P MidCap400™ Index (''S&P Midcap''), respectively. Each such index is referred to herein individually as an ''Underlying Index'' or ''Index'' and collectively as ''Underlying Indexes,''[10]Each of these Funds if successful in meeting its objective, should gain, on a percentage basis,

[6] In October 1999, the Commission approved NYSE Arca Equities Rule 5.2(j)(3), which sets forth the rules related to listing and trading criteria for Investment Company Shares. *See* Securities Exchange Act Release No. 41983 (October 6, 1999), 64 FR 56008 (October 15, 1999) (SR–PCX–1998–29). In July 2001, the Commission also approved the Exchange's generic listing standards for listing and trading, or the trading pursuant to UTP, of Investment Company Shares under NYSE Arca Equities Rule 5.2(j)(3). *See* Securities Exchange Act Release No. 44551 (July 12, 2001), 66 FR 37716 (July 19, 2001) (SR–PCX–2001–14). The definition of an Investment Company Unit is set forth in NYSE Arca Equities Rule 5.1(b)(15), which provides that an Investment Company Unit is a security representing an interest in a registered investment company that could be organized as a unit investment trust, an open-end management investment company or a similar entity.

[7] NYSE Arca Equities Rule 5.2(j)(3)(A)(i)(a) allows the listing and trading of Investment Company Shares issued by a registered investment company that holds securities comprising, or otherwise based on or representing an interest in, an index or portfolio or securities. The Exchange represents that the Shares qualify under NYSE Arca Equities Rule 5.2(j)(3) because the Shares are being registered under the Investment Company Act of 1940 (the ''1940 Act'') and are ''otherwise based on'' an index.

[8] *See* Securities Exchange Act Release No. 34–52553 (October 3, 2005), 70 FR 59100 (October 11, 2005) (SR–SMEX–2004–62) (the ''Amex Order'') (approving the listing and trading on Amex of the following eight Funds: Ultra 500 Fund, Ultra 100 Fund, Ultra 30 Fund, Ultra Mid-Cap 400 Fund ; Short 500 Fund, Short 100 Fund, Ultra 100 Fund, Ultra 100 Fund, Ultra 30 Fund, Ultra Mid-Cap 400 Fund; Short 500 Fund, Short 100 Fund, Short 30 Fund and Short Mid-Cap 400 Fund). *See also* Securities Exchange Act Release No. 52197 (August 2, 2005), 70 FR 46228 August 9, 2005) (SR–AMEX–2004–62) (the ''Amex Notice'').

[9] *See* SR–AMEX–2006–41 (April 28, 2006) (the ''Amex Proposal'') (seeking accelerated approval to list and trade on Amex the Ultra Short 500 Fund, Ultra Short 100 Fund, Ultra Short 30 Fund and Ultra short Mid-Cap 400 Fund).

[10] Exchange-traded funds based on the Underlying Indexes are traded on the NYSE Arca Marketplace. The Statement of Additional Information (''SAI'') for the Funds discloses that each Fund reserves the right to substitute a different Underlying Index under certain circumstances. In the event a Fund substitutes a different index, the Exchange will file a new Rule 19b–4 filing with the Commission if the listing market does so.

approximately twice as much as the Fund's Underlying Index when the prices of the securities in such Index increase on a given day, and should lose approximately twice as much when such prices decline on a given day.

In addition, four Funds— the Short 500, Short 100, Short 30, and Short Mid-Cap 400 Funds (the ''Initial Bearish Funds'')—seek daily investment results, before fees and expenses, which correspond to the inverse or opposite of the daily performance (−100%) of the S&P 500, Nasdaq 100, DJIA and S&P MidCap, respectively. If each of these Funds is successful in meeting its objective, the net asset value (the ''NAV'') [11] of shares of each Fund should increase approximately as much, on a percentage basis, as the respective Underlying Index decreases when the prices of the securities in the Index decline on a given day; or should decrease approximately as much, on a percentage basis, as the respective Index gains when the prices of the securities in the index rise on a given day.

The remaining four Funds—the Ultra Short 500, Ultra Short 100, Ultra Short 30, and Ultra Short Mid-Cap 400 Funds (the ''Additional Bearish Funds'')—seek daily investment results, before fees and expenses, that correspond to twice (or two times) the inverse or opposite (−200%) of the daily performance of the S&P 500, Nasdaq 100, DJIA and S&P MidCap, respectively. If each of these Funds is successful in meeting its objective, the net asset value (the ''NAV'') of the Shares of each Fund should increase approximately twice as much, on a percentage basis, as the respective Underlying Index loses when the prices of the securities in the Index decline on a given day, or should decrease approximately twice as much as the respective Underlying Index gains when the prices of the securities in the Index rise on a given day. The ''Initial Bearish Funds'' and the ''Additional Bearish Funds'' are referred to herein collectively as the ''Bearish Funds.''

The Shares represent beneficial ownership interests in the net assets of the Funds, less expenses. The Bullish Funds generally will hold at least 85% of their assets in the component equity securities (''Equity Securities'') of the relevant Underlying Index. The remainder of assets will be devoted to Financial Instruments (as defined below) that are intended to create the additional needed exposure to such Underlying Index necessary to pursue the Fund's investment objective. The Bearish Funds will not invest directly in the component securities of the relevant Underlying Index, but instead, will create short exposure to such Index. Normally 100% of the value of the portfolios of each Bearish Fund will be devoted to Financial Instruments (defined below) and money market instruments, including U.S. government securities and repurchase agreements (the ''Money Market Instruments'').

The financial instruments to be held by any of the Bullish or Bearish Funds may include stock index futures contracts, options on futures contracts, options on securities and indices, equity caps, collars and floors as well as swap agreements, forward contracts, repurchase agreements and reverse repurchase agreements (the ''Financial Instruments''), and Money Market Instruments. ProShare Advisors LLC is the investment adviser (the ''Advisor'') to each Fund.

(a) The Shares. A description of the Trust, the operation of the Funds and the creation and redemption process for the Shares is set forth in the Amex Notice, the Amex Order and the Amex Proposal. To summarize, issuances of Shares will be made only in aggregations of at least 50,000 Shares or multiples thereof (''Creation Shares'' or ''Creation Unit Aggregations''). The Funds will issue and redeem the Shares on a continuous basis, by or through participants that have entered into participant agreements (each, an ''Authorized Participant'') with the Distributor.

Persons purchasing Creation Unit Aggregations from the Bullish Funds do so through an ''in-kind'' process in which a basket of securities (the ''Deposit Securities''), together with an amount of cash (the ''Cash Balancing Amount''), plus the applicable transaction fee is deposited with the Fund. The redeeming Authorized Participant deposits Bullish Fund Shares in Creation Unit Aggregations in exchange for a basket of securities (the ''Redemption Securities''), which in most cases will be the same as the Deposit Securities required of investors purchasing Creation Shares on the same day. The redeeming Authorized Participant may receive from or pay to the Fund a Cash Balancing Amount and also must pay to the Fund a transaction fee. A Fund has the right to require creation payments or a right to make redemption payments in cash, in kind, or a combination of each.

The Bearish Funds will be purchased and redeemed entirely for cash (''All-Cash Payments''). The use of an All-Cash Payment for the purchase and redemption of Creation Unit Aggregations of the Bearish Funds is due to the limited transferability of Financial Instruments. The Exchange believes that Bearish Fund Shares will not trade at a material discount or premium to the underlying securities held by a Fund based on potential arbitrage opportunities.[12]

NAV per Share of each Fund is computed by dividing the value of the net assets of such Fund (*i.e.,* the value of its total assets less total liabilities) by its total number of Shares outstanding. Expenses and fees are accrued daily and taken into account for purposes of determining NAV. The NAV of each Fund is calculated by the accounting agent for the Fund and determined each business day at the close of regular trading of the NYSE (ordinarily 4:00 p.m. New York time). More information regarding the calculation of the NAV is set forth in the Amex Order.

(b) Dissemination of Information About the Shares and the Underlying Indexes. The Trust's or Advisor's Web site, which is and will be publicly accessible at no charge (and to which the Exchange ill provide a hyperlink on its Web site), will contain the following information for each Fund's Shares: (i) The prior business day's closing NAV, the reported closing price, and a calculation of the premium or discount of such price in relation to the closing NAV; (ii) data for a period covering at least the four previous calendar quarters (or the life of a Fund, if shorter) indicating how frequently each Fund's Shares traded at a premium or discount to NAV based on the reported closing price and NAV, and the magnitude of such premiums and discounts; (iii) its Prospectus and Product Description; and (iv) other quantitative information such as daily trading volume.

According to the Amex Order, the Amex will disseminate for each Fund on a daily basis by means of Consolidated Tape Association (''CTA'') and CQ High Speed Lines information with respect to in Indicative Intra-Day Value (the ''IIV'') (discussed below),

[11] The NAV of each Fund is calculated and determined each business day at the close of regular trading at the Amex, typically 4 p.m. eastern time (''ET'').

[12] According to the Amex Order, in their 1940 Act Application, the Applicants stated that they do not believe that All-Cash Payments will affect arbitrage efficiency. This is because the Applicants believe it makes little difference to an arbitrageur whether Creation Unit Aggregations are purchased in exchange for a basket of securities or cash. The important function of the arbitrageur is to bid the share price of any Fund up or down until it converges with the NAV. Applicants state that this can occur regardless of whether the arbitrageur is allowed to create in cash or with a Deposit Basket. In either case, the arbitrageur can effectively hedge a position in a Fund in a variety of ways, including the use of market-on-close contracts to buy or sell the underlying Equity Securities and/or Financial Instruments.

recent NAV, shares outstanding, estimated cash amount, and total cash amount per Creation Unit. The Amex will make available on its Web site (*http://www.amex.com*) daily trading volume, closing price, the NAV, and final dividend amounts, if any, to be paid for each Fund. The closing prices of the Deposit Securities are readily available from, as applicable, exchanges, automated quotation systems, published or other public sources, or on-line information services such as Bloomberg or Reuters.

Each Fund's total portfolio composition will be disclosed on the Web site of the trust (*http://www.profunds.com*). The Trust expects that Web site disclosure of portfolio holdings will be made daily and will include, as applicable, the names and number of shares held of each specific Equity Security, the specific types of Financial Instruments and characteristics of such instruments, cash equivalents and amount of cash held in the portfolio of each Fund. This public Web site disclosure of the portfolio composition of each Fund will coincide with the disclosure by the Advisor of the ''IIV File'' and the ''PCF File''.[13] Therefore, the same portfolio information (including accrued expenses and dividends) will be provided on the public Web site as well as in the IIV File and PCF File provided to authorized Participants. The format of the public Web site disclosure and the IIV and PCF Files will differ because the public Web site will list all portfolio holdings, whereas the IIV and PCF Files will similarly provide the portfolio holdings but in a format appropriate for Authorized Participants, *i.e.,* the exact components of a Creation Unit. Accordingly, all investors will have access to the current portfolio composition of each Fund through the Trust Web site at *http://www.profunds.com.*

Beneficial owners of Shares (''Beneficial Owners'') will receive all of the statements, notices, and reports required under the 1940 Act and other applicable laws. They will receive, for example, annual and semi-annual fund reports, written statements accompanying dividend payments, proxy statements, annual notifications detailing the tax status of fund distributions, and Form 1099–DIVs. Some of these documents will be provided to Beneficial Owners by their brokers, while others will be provided by the Fund through the brokers.

The daily closing index value and the percentage change in the daily closing index value for each Underlying Index will be publicly available on various Web sites, *e.g., http://www.bloomberg.com.* Data regarding each Underlying Index is also available from the respective index provider to subscribers. Several independent data vendors also package and disseminate index data in various value-added formats (including vendors displaying both securities and index levels and vendors displaying index levels only). The value of each Underlying Index will be updated intra-day on a real time basis as its individual component securities change in price. According to the Amex Order, these intra-day values of each Underlying Index will be disseminated every 15 seconds throughout the trading day by the Amex or another organization authorized by the relevant Underlying Index provider.

In order to provide updated information relating to each Fund for use by investors, professionals, and persons wishing to create or redeem Shares, the Amex will disseminate through the facilities of the CTA from 9:30 a.m. ET to 4:15 p.m. ET: (i) continuously, the market value of a share; and (ii) every 15 seconds, a calculation of the IIV as calculated by a third-party calculator (the ''IIV Calculator'') currently expected to be Amex, according to the Amex Order. Comparing these two figures helps an investor to determine whether, and to what extent, the Shares may be selling at a premium or a discount to NAV. Information regarding the calculation methodology for the IIV for the Bullish Funds and the Bearish Funds is set forth in the Amex Order.

The IIV is designed to provide investors with a reference value that can be used in connection with other related market information. The IIV may not reflect the value of all securities included in the Underlying Index. In addition, the IIV does not necessarily reflect the precise composition of the current portfolio of securities held by each Fund at a particular point in time. Therefore, the IIV should not be viewed as a real time update of the NAV of a particular Fund which is calculated only once a day.

(c) *UTP Trading Criteria.* The Exchange represents that it will cease trading the Shares of a Fund during the listing market's trading hours if: (a) the listing market stops trading the Shares because of a regulatory halt similar to a halt based on NYSE Arca Equities Rule 7.12 or a halt because the IIV or the value of the applicable Underlying Index is no longer available; or (b) the listing market delists the shares. Additionally, the Exchange may cease trading the Shares of a Fund if such other event shall occur or condition exists which in the opinion of the Exchange makes further dealings on the Exchange inadvisable.

(d) Trading Rules. The Exchange deems the Shares to be equity securities, thus rendering trading in the Shares subject to the Exchange's existing rules governing the trading of equity securities. Shares will trade on the NYSE Arca Marketplace from 9:30 a.m. ET until 8 p.m. ET, even if the IIV is not disseminated from 4:14 p.m. ET to 8 p.m. ET.[14] The Exchange has appropriate rules to facilitate transactions in the Shares during all trading sessions. The minimum trading increment for Shares on the Exchange will be $0.01.

With respect to trading halts, the Exchange may consider all relevant factors in exercising its discretion to halt or suspend trading in the Shares of a Fund. Trading may be halted because of market conditions or for reasons that, in the view of the Exchange, make trading in the Shares inadvisable. These may include: (1) The extent to which trading is not occurring in the securities comprising a Underlying Index and/or the Financial Instruments of a Fund, or (2) whether other unusual conditions or circumstances detrimental to the maintenance of a fair and orderly market are present. In addition, trading in Shares will be subject to trading halts caused by extraordinary market volatility pursuant to the Exchange's

[13] According the Amex Order, at the end of each business day, the Trust will create a portfolio composition file (''PCF'') for each Fund, which it will transmit via JPMorgan Chase Bank (the ''Index Receipt Agent'') to the National Securities Clearing Corporation (''NSCC'') before the open of business the next business day. Because the NSCC's system for the receipt and dissemination to its participants of the PCF is not currently capable of processing information with respect to Financial Instruments, the Advisor has developed an ''IIV File,'' which it will use to disclose the Fund's holdings of Financial Instruments. The IIV File will contain, for each Bullish Fund (to the extent that it holds Financial Instruments) and Bearish Fund, information sufficient by itself or in connection with the PCF File and other available information for market participants to calculate a Fund's IIV and effectively arbitrage the Fund. The information in the PCF File and the IIV File will be available to all participants in the NSCC system.

[14] Because NSCC does not disseminate the new basket amount to market participant until approximately 6 p.m. to 7 p.m. ET, an updated IIV is not possible to calculate during the Exchange's late trading session. The Exchange also states that currently the official index sponsors for the Funds' indexes do not calculate updated index values during the Exchange's late trading session; however, if the index sponsors did so in the future, the Exchange will not trade this product unless such official index value is widely disseminated. Telephone Conference between Lisa Dallmer, Director, NYSE Arca Equities, Inc., and Florence E. Harmon, Senior Special Counsel, Division, Commission, on June 21, 2006.

''circuit breaker'' rule[15] or by the halt or suspension of trading of the underlying securities.[16]

Shares will be deemed ''Eligible Listed Securities,'' as defined in NYSE Arca Equities Rule 7.55, for purposes of the Intermarket Trading System (''ITS'') Plan and therefore will be subject to the trade through provisions of NYSE Arca Equities Rule 7.56, which require that ETP Holders avoid initiating trade-throughs for ITS securities.

(e) Surveillance. The Exchange intends to utilize its existing surveillance procedures applicable to derivative products to monitor trading in the Shares. The Exchange represents that these procedures are adequate to monitor Exchange trading of the Shares.

The Exchange's current trading surveillance focuses on detecting securities trading outside their normal patterns. When such situations are detected, surveillance analysis follows and investigations are opened, where appropriate, to review the behavior of all relevant parties for all relevant trading violations.

The Exchange is able to obtain information regarding trading in the Shares and the securities comprising the Underlying Indexes through ETP Holders in connection with such ETP Holders' proprietary or customer trades which they effect on any relevant market. In addition, the Exchange may obtain trading information via the Intermarket Surveillance Group (''ISG'') from other exchanges who are members or affiliates of the ISG.

In addition, the Exchange also has a general policy prohibiting the distribution of material, non-public information by its employees.

(f) Information Bulletin. Prior to the commencement of trading, the Exchange will inform its ETP Holders in an Information Bulletin of the special characteristics and risks associated with trading the Shares. Specifically, the Information Bulletin will discuss the following: (1) The procedures for purchases and redemptions of Shares in Creation Unit Aggregations (and that Shares are not individually redeemable); (2) NYSE Arca Equities Rule 9.2(a), as amended herein and more fully described below, which imposes a duty of due diligence on its ETP Holders to learn the essential facts relating to every customer prior to trading the Shares; (3) how information regarding the IIV is disseminated; (4) the requirement that ETP Holders deliver a prospectus to investors purchasing newly issued Shares prior to or concurrently with the confirmation of a transaction; and (5) trading information. Specifically, the proposed amendment to NYSE Arca Equities Rule 9.2(a), which will be discussed in the Information Bulletin as noted above, provides that ETP Holders, before recommending a transaction in the Shares, must have reasonable grounds to believe that the recommendation is suitable for the customer based on any facts disclosed by the customer as to his other security holdings and as to his financial situation and needs. Further, the proposed rule amendment provides that prior to the execution of a transaction recommended to a non-institutional customer, ETP Holders should make reasonable efforts to obtain information concerning the customer's financial status, tax status, investment objectives and any other information that they believe would be useful to make a recommendation.

In addition, the Information Bulletin will advise ETP Holders, prior to the commencement of trading, of the prospectus delivery requirements applicable to the Funds.[17] The Exchange notes that investors purchasing Shares directly from the Trust will receive a prospectus. ETP Holders purchasing Shares from the Trust for resale to investors will deliver a prospectus to such investors. The Information Bulletin will also discuss any relief, if granted, by the Commission or the staff from any rules under the Act.

In addition, the Information Bulletin will reference that the Trust is subject to various fees and expenses described in the Registration Statement. The Information Bulletin will also disclose that the NAV for the Shares will be calculated shortly after 4 p.m. ET each trading day.

2. Statutory Basis

The Exchange believes that the proposed rule change is consistent with Section 6(b) of the Act,[18] in general, and furthers the objectives of Section 6(b)(5),[19] in particular, in that it is designed to promote just and equitable principles of trade, to foster cooperation and coordination with persons engaged in facilitating transaction in securities, to remove impediments and perfect the mechanisms of a free and open market, and, in general, to protect investors and the public interest.

In addition, the Exchange believes that the proposal is consistent with Rule 12f–5 under the Act[20] because it deems the Shares to be equity securities, thus rendering the Shares subject to the Exchange's existing rules governing the trading of equity securities.

B. Self-Regulatory Organization's Statement on Burden on Competition

The Exchange does not believe that the proposed rule change will impose any burden on competition that is not necessary or appropriate in furtherance of the purposes of the Act.

C. Self-Regulatory Organization's Statement on Comments on the Proposed Rule Change Received From Members, Participants or Others

Written comments on the proposed rule change were neither solicited nor received.

III. Solicitation of Comments

Interested persons are invited to submit written data, views and arguments concerning the foregoing, including whether the proposed rule change, as amended, is consistent with the Act. Comments may be submitted by any of the following methods:

Electronic Comments

- Use the Commission's Internet comment form (*http://www.sec.gov/rules/sro.shtml*); or
- Send an e-mail to *rule-comments@sec.gov.* Please include File Number SR–PCX–2005–115 on the subject line.

Paper Comments

- Send paper comments in triplicate to Nancy M. Morris, Secretary, Securities and Exchange Commission, Station Place, 100 F Street, NE., Washington, DC 20549–1090.

All submissions should refer to File Number SR–PCX–2005–115. This file number should be included on the subject line if e-mail is used. To help the Commission process and review your comments more efficiently, please use only one method. The Commission will post all comments on the Commission's Internet Web site (*http:///www.sec.gov/rules.sro.shtml*). Copies of the submission, all subsequent amendments, all written statements

[15] *See* NYSE Arca Equities Rule 7.12.

[16] *See* ''UTP Trading Criteria'' above for specific instances when the Exchange will cease trading the Shares.

[17] According to the Amex Order, their 1940 Act Application included a request that the exemptive order also grant relief from Section 24(d) of the 1940 Act, which would permit dealers to sell Shares in the secondary market unaccompanied by a statutory prospectus when prospectus delivery is not required by the Securities Act of 1933. Any Product Description used in reliance on Section 24(d) exemptive relief will comply with all representations and conditions set forth in the order.

[18] 15 U.S.C. 78s(b).

[19] 15 U.S.C. 78s(b)(5).

[20] 17 CFR 240.12f–5.

with respect to the proposed rule change that are filed with the Commission, and all written communications relating to the proposed rule change between the Commission and any person, other than those that may be withheld from the public in accordance with the provisions of 5 U.S.C. 552, will be available for inspection and copying in the Commission's Public Reference Room. Copies of such filing also will be available for inspection and copying at the principal office of the Exchange. All comments received will be posted without change; the Commission does not edit personal identifying information from submissions. You should submit only information that you wish to make available publicly. All submissions should refer to File Number SR–PCX–2005–115 and should be submitted on or before July 19, 2006.

IV. Commission's Findings and Order Granting Accelerated Partial Approval of Proposed Rule Change

The Commission is approving the portion of the proposed rule change, as amended, pertaining to the trading pursuant to UTP of eight Funds: Ultra 500 Fund, Ultra 100 Fund Ultra 30 Fund, Ultra Mid-Cap 400 Fund, Short 500 Fund, Short 100 Fund, Short 30 Fund, and Short Mid-Cap 400 Fund (''Original Funds''). The Commission is also approving the Exchange's Rule 9.2(a) with respect to ''Diligence to Accounts.'' With regard to the trading pursuant to UTP of the Original Funds and the implementation of Rule 9.2(a) ''Diligence to Accounts,'' the Commission finds that the proposed rule change, as amended, is consistent with the requirements of the Act and the rules regulations thereunder applicable to a national securities exchange.[21] In particular, the Commission finds that the portion of the proposed rule change pertaining to the Original Funds and Rule 9.2(a) is consistent with Section 6(b)(5) of the Act,[22] which requires that an exchange have rules designed, among other things, to promote just and equitable principles of trade, to remove impediments to and perfect the mechanism of a free and open market and a national market system, and in general to protect investors and the public interest.

In addition, the Commission finds that the portion of the proposal pertaining to the trading the Original Funds is consistent with Section 12(f) of the Act,[23] which permits an exchange to trade, pursuant to UTP, a security that is listed and registered on another exchange.[24] The Commission notes that it previously approved the listing and trading of the Shares of the Original Funds on the Amex.[25] The Commission also finds that the proposal is consistent with Rule 12f–5 under the Act,[26] which provides that an exchange shall not extend UTP to a security unless the exchange has in effect a rule or rules providing for transactions in the class or type of security to which the exchange extends UTP. NYSEArca rules deem the Shares to be equity securities, thus trading in the Shares will be subject to the Exchange's existing rules governing the trading of equity securities.

The Commission further believes that the proposal is consistent with Section 11A(a)(1)(C)(iii) of the Act,[27] which sets forth Congress's finding that it is in the public interest and appropriate for the protection of investors and the maintenance of fair and orderly markets to assure the availability to brokers, dealers, and investors of information with respect to quotations for and transactions in securities.

In connection with the Exchange's UTP of the Shares, of the Original Funds, the Exchange will cease trading in the Shares if: (1) the listing market stops trading the Shares because of a regulatory halt similar to NYSE Arca Equities Rule 7.12 or a halt because the Indicative Partnership Value or the value of the applicable Underlying Index is no longer available, or (b) the listing market delists the Shares. Additionally, the Exchange may cease trading the Shares if such other event shall occur or condition exists which in the opinion of the Exchange makes further dealings on the Exchange inadvisable.

In support of the portion of the proposed rule change regarding UTP of the Shares, of the Original Funds, the Exchange has made the following representations:

1. The Exchange has appropriate rules to facilitate transactions in this type of security in all trading sessions.

2. The Exchange's surveillance procedures are adequate to properly monitor the trading of the Shares on the Exchange.

3. The Exchange will distribute an Information Bulletin to its members prior to the commencement of trading of the Shares on the Exchange that explains the special characteristics and risks of trading the Shares.

4. The Exchange will require a member with a customer who purchases newly issued Shares on the Exchange to provide that customer with a product prospectus and will note this prospectus delivery requirement in the Information Bulletin.

5. The Exchange will cease trading in the Shares if (1) the listing market stops trading the Shares because of a regulatory halt similar to a halt based on NYSE Arca Equities Rule 7.12 and/or a halt because the Indicative Partnership Value or the value of the applicable Underlying Index is no longer available, or (2) the listing market delists the Shares.

This approval order is conditioned on the Exchange's adherence to these representations.

The Commission finds good cause for partially approving this proposed rule change with regard to the UTP of the Original Funds and Rule 9.2(a) ''Diligence to Accounts'' before the thirtieth day after the publication of notice thereof in the **Federal Register**. As noted previously, the Commission previously found that the listing and trading of these Shares on the amex is consistent with the Act.[28] The Commission presently is not aware of any issue that would cause it to revisit that earlier finding or preclude the trading of these funds on the Exchange pursuant to UTP. Rule 9.2(a) ''Diligence as to Accounts'' is substantially similar to the suitability standards previously approved for other self-regulatory organizations. Therefore, accelerating approval of this proposed rule change should benefit investors by creating, without undue delay, additional competition in the market for these Shares and suitability standards that will enhance investor protection.

V. Conclusion

It is therefore ordered, pursuant to Section 19(b)(2) of the Act, that the proposed rule change (SR–PCX–2005–115), as amended, is hereby approved on an accelerated basis.[29]

[21] In approving this rule change, the Commission notes that it has considered the proposed rule's impact on efficiency, competition, and capital formation. *See* 15 U.S.C. 78c(f).

[22] 15 U.S.C. 78f(b)(5).

[23] 15 U.S.C. 78*l*(f).

[24] Section 12(a) of the Act, 15 U.S.C. 781(a), generally prohibits a broker-dealer from trading a security on a national securities exchange unless the security is registered on that exchange pursuant to Section 12 of the Act. Section 12(f) of the Act excludes from this restriction trading in any security to which an exchange ''extends UTP.'' When an exchange extends UTP to a security, it allows its members to trade the security as if it were listed and registered on the exchange even though it is not so listed and registered.

[25] *See* Amex Order and Amex Notice, *supra* note 8.

[26] 17 CFR 240.12f–5.

[27] 15 U.S.C. 78k–1(a)(1)(C)(iii).

[28] *See* Amex Order and Amex Notice, *supra* note 8.

[29] 15 U.S.C. 78s(b)(2).

For the Commission, by the Division of Market Regulation, pursuant to delegated authority.[30]

J. Lynn Taylor,

Assistant Secretary.

[FR Doc. 06–5729 Filed 6–27–06; 8:45 am]

BILLING CODE 8010–01–M

SECURITIES AND EXCHANGE COMMISSION

[Release No. 34–54025; File No. SR–NYSEArca–2006–12]

Self-Regulatory Organizations; NYSE Arca, Inc.; Notice of Filing and Order Granting Accelerated Approval of Proposed Rule Change and Amendment No. 1 Relating to iShares® GSCI Commodity-Indexed Trust

June 21, 2006.

Pursuant to section 19(b)(1) of the Securities Exchange Act of 1934 (''Act''),[1] and Rule 19b–4 thereunder,[2] notice is hereby given that on April 26, 2006, NYSE Arca, Inc. (the ''Exchange''), through its wholly owned subsidiary NYSE Arca Equities, Inc. (''NYSE Arca Equities'' or the ''Corporation''), filed with the Securities and Exchange Commission (''Commission'') the proposed rule change as described in Items I and II below, which Items have been prepared by the Exchange. On June 19, 2006, the Exchange submitted Amendment No. 1 to the proposed rule change.[3] The Commission is publishing this notice to solicit comments on the proposed rule change, as amended, from interested persons and is approving the proposal, as amended, on an accelerated basis.

1. Self-Regulatory Organization's Statement of the Terms of Substance of the Proposed Rule Change

The Exchange, through its wholly owned subsidiary NYSE Arca Equities, proposes to amend its rules governing NYSE Arca, LLC (also referred to as the ''NYSE Arca Marketplace''), the equities trading facility of NYSE Arca Equities. The Exchange proposes new NYSE Arca Equities Rule 8.203 in order to permit trading, either by listing or pursuant to unlisted trading privileges (''UTP''), shares issued by a trust that is a commodity pool that holds long positions in futures contracts on a specified commodity index, or interests in a commodity pool that, in turn, holds such long positions (''Commodity Index Trust Shares'') and trading, pursuant to UTP, shares (''Shares'') of the iShares® GSCI® Commodity-Indexed Trust (the ''Trust'').[4]

The text of the proposed rule change appears below. All text is new.

* * * * *

Rules of NYSE Arca Equities, Inc.

Rule 8.203

Commodity Index Trust Shares

(a) The Corporation will consider for trading, whether by listing or pursuant to unlisted trading privileges, Commodity Index Trust Shares that meet the criteria of this Rule.

(b) Applicability. This Rule is applicable only to Commodity Index Trust Shares. Except to the extent inconsistent with this Rule, or unless the context otherwise requires, the provisions of the trust issued receipts rules, Bylaws, and all other rules and procedures of the Board of Directors shall be applicable to the trading on the Corporation of such securities. Commodity Index Trust Shares are included within the definition of ''security'' or ''securities'' as such terms are used in the Bylaws and Rules of the Corporation.

(c) Commodity Index Trust Shares. The term ''Commodity Index Trust Shares'' as used in the Rules shall, unless the context otherwise requires, mean a security that (a) is issued by a trust (''Trust'') that (i) is a commodity pool as defined in the Commodity Exchange Act and regulations thereunder, and that is managed by a commodity pool operator registered with the Commodity Futures Trading Commission, and (ii) that holds long positions in futures contracts on a specified commodity index, or interests in a commodity pool which, in turn, holds such long positions; (b) when aggregated in some specified minimum number may be surrendered to the Trust by the beneficial owner to receive positions in futures contracts on a specified index and cash or short term securities. The term ''futures contract'' is commonly known as a ''contract of sale of a commodity for future delivery'' set forth in Section 2(a) of the Commodity Exchange Act.

(d) Designation. The Corporation may trade, either by listing or pursuant to unlisted trading privileges, Commodity Index Trust Shares based on one or more securities. The Commodity Index Trust Shares based on particular securities shall be designated as a separate series and shall be identified by a unique symbol.

(e) Initial and Continued Listing. Commodity Index Trust Shares will be listed and traded on the Corporation subject to application of the following criteria:

(1) Initial Listing—the Corporation will establish a minimum number of Commodity Index Trust Shares required to be outstanding at the time of commencement of trading on the Corporation.

(2) Continued Listing—the Corporation will consider the suspension of trading in or removal from listing of a series of Commodity Index Trust Shares under any of the following circumstances:

(i) following the initial twelve-month period beginning upon the commencement of trading of the Commodity Index Trust Shares, there are fewer than 50 record and/or beneficial holders of Commodity Index Trust Shares for 30 or more consecutive trading days;

(ii) if the value of the applicable underlying index is no longer calculated or available on at least a 15-second delayed basis from a source unaffiliated with the sponsor, the Trust or the trustee of the Trust; or

(iii) if the net asset value for the trust is no longer disseminated to all market participants at the same time;

(vi) if the Indicative Trust Value is no longer made available on at least a 15-second delayed basis; or

(v) if such other event shall occur or condition exists which in the opinion of the Corporation makes further dealings on the Corporation inadvisable.

Upon termination of a Trust, the Corporation requires that Commodity Index Trust Shares issued in connection with such entity Trust be removed from Corporation listing. A Trust may terminate in accordance with the provisions of the Trust prospectus, which may provide for termination if the value of the Trust falls below a specified amount.

(3) Term—The stated term of the Trust shall be as stated in the Trust prospectus. However, a Trust may be terminated under such earlier circumstances as may be specified in the Trust prospectus.

(4) Trustee—The following requirements apply:

(i) The trustee of a Trust must be a trust company or banking institution having substantial capital and surplus and the experience and facilities for handling corporate trust business. In cases where, for any reason, an

[30] 17 CFR 200.30–3(a)(12).

[1] 15 U.S.C. 78s(b)(1).

[2] 17 CFR 240.19b–4.

[3] Amendment No. 1 made changes to the proposed rule text, as well as to corresponding sections of the Purpose section. Amendment No. 1 also made other clarifying changes to the Purpose section.

[4] iShares® is a registered trademark of Barclays Global Investors, N.A. GSCI is a registered trademark of Goldman, Sachs & Co.

individual has been appointed as trustee, a qualified trust company or banking institution must be appointed co-trustee.

(ii) No change is to be made in the trustee of a listed issue without prior notice to and approval of the Corporation.

(5) Voting—Voting rights shall be as set forth in the applicable Trust prospectus.

(f) Limitation of Corporation Liability. Neither the Corporation nor any agent of the Corporation shall have any liability for damages, claims, losses or expenses caused by any errors, omissions, or delays in calculating or disseminating any applicable underlying index value; the current value of the applicable positions or interests required to be deposited to the Trust in connection with issuance of Commodity Index Trust Shares; net asset value; or any other information relating to the purchase, redemption, or trading of the Commodity Index Trust Shares, resulting from any negligent act or omission by the Corporation, or any agent of the corporation, or any act, condition or cause beyond the reasonable control of the Corporation, its agent, including, but not limited to, and act of God; fire; flood; extraordinary weather conditions; war; insurrection; riot; strike; accident; action of government; communications or power failure; equipment or software malfunction; or any error, omission or delay in the reports of transactions in the applicable positions or interests.

(g) Information Barrier. An ETP Holder acting as a registered Market Maker or Market Maker Authorized Trade in Commodity Index Trust Shares is obligated to comply with PCXE Rule 7.26 pertaining to limitations on dealings when such Market Maker or Market Maker Authorized Trader, or affiliate of such persons, engages in Other Business Activities. For purposes of Commodity Index Trust Shares only, Other business Activities shall include trading in the applicable physical commodities included in, or options, futures or options on futures on, an index underlying an issue of Commodity Index Trust Shares or any other derivatives based on such index or based on any commodity included in such index.

(h) Market Maker Accounts. An ETP Holder acting as a registered Market maker in Commodity Index Trust Shares must file with the Exchange in a manner prescribed by the Exchange and keep current a list identifying all accounts for trading in the applicable physical commodities included in, or options, futures or options on futures on, an index underlying an issue of Commodity Index Trust Shares or any other derivatives based on such index or based on any commodity included in such index, which the Market Maker may have or over which it may exercise investment discretion. No Market Maker shall trade in the applicable physical commodities included in, or options, futures or options on futures on, an index underlying an issue of Commodity Index Trust Shares or any other derivatives based on such index or based on any commodity included in such index, in an account in which a Market Maker, directly or indirectly, controls trading activities, or has a direct interest in the profits or losses thereof, which has not been reported to the Exchange as required by this Rule.

In addition to the existing obligations under Exchange rules regarding the production of books and records, the ETP Holder acting as a Market Maker in Commodity Index Trust Shares shall make available to the Exchange such books, records or other information pertaining to transactions by such entity or registered or non-registered employee affiliated with such entity for its or their own accounts for trading the applicable physical commodities included in, or options, futures or options on futures on, an index underlying an issue of Commodity Index Trust Shares or any other derivatives based on such index or based on any commodity included in such index, as may be requested by the Exchange.

(i) In connection with trading the applicable physical commodities included in, or options, futures or options on futures on, an index underlying an issue of Commodity Index Trust Shares or any other derivatives based on such index (including Commodity Index Trust Shares), the ETP Holder acting as a Market Maker in Commodity Index Trust Shares shall not use any material nonpublic information received from any person associated with an ETP Holder or employee of such person regarding trading by such person or employee in the applicable physical commodities included in, or options, futures or options on futures on, an index underlying an issue of Commodity Index Trust Shares or any other derivatives based on such index or based on any commodity included in such index.

Commentary:

01. *A Commodity Index Trust Share is a Trust Issued Receipt that holds long positions in futures contracts on a specified commodity index, or interests in a community pool which, in turns, holds such long positions, deposited with the Trust.*

02. *The Corporation requires that ETP Holders provide all purchasers of newly issued Commodity Index Trust Shares a prospectus for the series of Commodity Index Trust Shares.*

03. *Transactions in Commodity Index Trust Shares will occur during he trading hours specified in PCXE Rule 7.34.*

04. *The Corporation will file separate proposals under Section 19(b) of the Securities Exchange Act of 1934 before trading, either by listing or pursuant to unlisted trading privileges, commodity Index Trust Shares.*

* * * * *

II. Self-Regulatory Organization's Statement of the Purpose of, and Statutory Basis for, the Proposed Rule Change

In its filing with the Commission, the Exchange included statements concerning the purpose of, and basis for, the proposed rule change, as amended, and discussed any comments it received on the proposed rule change. The text of these statements may be examined at the places specified in Item III below, and is set forth in Sections A, B, and C below.

A. Self-Regulatory Organization's Statement of the Purpose of, and the Statutory Basis for, the Proposed Rule Change

1. Purpose

The Exchange proposes to add new NYSE Arca Equities Rule 8.203 in order to permit trading, either by listing or pursuant to UTP, of Commodity Index Trust Shares.[5] The Exchange also proposes to trade the Shares of the Trust purusant to UTP. The New York Stock Exchange, Inc. (''NYSE'') filed a rule proposal to list and trade the Shares, which was approved by the Commission on June 16, 2006.[6]

The Shares represent fractional undivided beneficial interests in the net assets of the Trust. Substantially all of the assets of the Trust consist of its holdings of the limited liability

[5] Commodity Index Trust Shares are securities that (a) are issued by a trust which (i) is a commodity pool as defined in the Commodity Exchange Act and regulations thereunder, and (ii) which holds long positions in futures contracts on a specified commodity index, or interests in a commodity pool which, in turn, holds such long positions; (b) when aggregated in some specified minimum number may be surrendered to the trust by the beneficial owner to receive positions in futures contracts on a specified index and cash or short term securities.

[6] *See* Securities Exchange Act Release Nos. 53659 (April 17, 2006), 71 FR 21074 (April 24, 2006) (notice of filing of SR–NYSE–2006–17) (''NYSE Proposal'') and 54013 (June 16, 2006) (''NYSE Order'').

company interests of a commodity pool (''Investing Pool Interests''), which are the only securities in which the Trust may invest. That commodity pool, iShare® GSCI Commodity-Indexed Investing Pool LLC (''Investing Pool''), holds long positions in futures contracts on the GSCI Excess Return Index (''GSCI–ER''), called ''CERFs,'' listed on the Chicago Mercantile Exchange (''CME'') and will post margin in the form of cash or short-term securities to collaterlize these futures positions. The GSCI–ER is calculated based on the same commodities included in the Goldman Sachs Commodity Index (''GSCI''), which is production-weighted index of the prices of a diversified group of futures contracts on physical commodities. The GSCI is administered, calculated and published by Goldman, Sachs & Co. (the ''Index Sponsor''), a subsidiary of The Goldman Sachs Group Inc.

According to the Trust's Registration Statement,[7] the Trust's objective is that the performance of the Shares will correspond generally to the performance of the GSCI Total Return Index (''Index'') before payment of the Trust's and the Investing Pool's expenses and liabilities. The Index is intended to reflect the performance of a diversified group of commodities. The Trust and and Investing Pool are each commodity pools, as defined in the Commodity Exchange Act and the applicable regulations of the Commodity Futures Trading Commission.

(a) *Commodity Index Trust Shares and the Shares.*

Proposed NYSE Arca Equities Rule 8.203 is inteded to accommodate possible future listing and trading of shares of trusts based on positions in futures contracts on a specified commodity index, in addition to the Index's Shares. Any new listing or trading of an issue of Commodity Index Trust Shares will be subject to approval of a proposed rule change by the Commission pursuant to section 19(b)(2)[8] of the Act and Rule 19b–4 thereunder.[9]

Descriptions of the Shares, the Investing Pool, the futures contracts, the Index, the GSCI–ER, the GSCI, and the fees and expenses of the Trustee are set forth in the NYSE Proposal.[10] To summarize, issuances of Shares will be made only in baskets of 50,000 Shares or multiples thereof (''Baskets''). The Trust will issue and redeem the Shares on a continuous basis, by or through participants that have entered into participant agreements (each, an ''Authorized Participant'') with Barclays Global Investors International, Inc. (the ''Sponsor'') and Barclays Global Investors, N.A. (the ''Trustee'').

Baskets will be issued only in exchange for an amount of CERFs and cash (or, in the discretion of the Trustee, Short-Term Securities[11] in lieu of cash) equal to the Basket Amount for the Business Day[12] on which the creation order was received by the Trustee. The Basket Amount for a Business Day will have a per Share value equal to the Net Asset Value (''NAV'') as of such day. However, orders received by the Trustee after 2:40 p.m. Eastern Time (''ET''), will be treated as received on the next following Business Day. The Trustee will notify the Authorized Participants of the Basket Amount on each Business Day. Baskets are then separable upon issuance into the Shares that will be traded on NYSE Arca Marketplace on a UTP basis.[13]

The Shares will not be individually redeemable but will be redeemable only in Baskets. To redeem, an Authorized Participant will be required to accumulate enough Shares to constitute a Basket (*i.e.,* 50,000 Shares). Authorized Participants that wish to redeem a Basket will receive an amount of CERFs and cash (or, in the discretion of the Trustee, Short-Term Securities in lieu of cash) equal to the Basket Amount on the Business Day the redemption request is received by the Trustee, in exchange for each Basket surrendered. However, redemption requests received by the Trustee after 2:40 p.m. ET (or, on any day on which the CME is scheduled to close early, after the close of trading of CERFs on the CME on such day), will be treated as received on the next following Business Day. The operation of the Trust and creation and redemption process is described in more detail in the NYSE Proposal.[14]

On each Business Day on which the NYSE is open for regular trading, as soon as practicable after the close of regular trading of the Shares on the NYSE (normally, 4:15 p.m. ET), the Trustee will determine the net asset value of the Trust and the NAV as of that time. The calculation methodology for the NAV is described in more detail in the NYSE Proposal.

The NAV for the Shares on each Business Day on which the NYSE is open for regular trading will be distributed to all market participants at the same time.[15] The NAV will be distributed through major market data vendors and will be published online at *http://www.ishares.com*, or any successor thereto. The Trust will update the NAV as soon as practicable after each subsequent NAV is calculated.

(b) *Dissemination of Information Relating to the Shares and the Underlying Futures Contracts and Commodities.*

The Web site for the Trust (*http://www.ishares.com*), which will be publicly accessible at no charge, will contain the following information: (a) The prior Business Day's NAV and the reported closing price; (b) the midpoint of the bid-ask price[16] in relation to the NAV as of the time the NAV is calculated (the ''Bid-Ask Price''); (c) calculation of the premium or discount of such price against such NAV; (d) data in chart form displaying the frequency distribution of discounts and premiums of the Bid-Ask Price against the NAV, within appropriate ranges for each of the four previous calendar quarters; (e) the prospectus; (f) the holdings of the Trust, including CERFs, cash and Treasury securities; (g) the Basket Amount, and (h) other applicable quantitative information. The Exchange, on its Web site at *http://www.archipelago.com*, will include a hyperlink to the Trust's Web site at *http://www.ishares.com*.

As described above the NAV for the Trust will be calculated and disseminated daily. According to the NYSE Proposal, the NYSE intends to disseminate from 9:30 a.m. to 4:15 p.m. ET daily by means of CTA/CQ High Speed Lines information with respect to the Indicative Trust Value (''ITV'') (as discussed below), recent NAV, and Shares outstanding. NYSE Arca Marketplace will make available on its Web site at *http://www.NYSEArca.com*

[7] The Sponsor, on behalf of the Trust, filed the Form S–1 (the ''Registration Statement'') on July 22, 2005, as amended. *See* Registration No. 333–126810.

[8] 15 U.S.C. 78s(b)(1).

[9] 17 CFR 240.19b7ndash;4.

[10] *See* NYSE Proposal, *supra* note 6.

[11] ''Short-Term Securities'' means U.S. Treasury Securities or other short-term securities and similar securities, in each case that are eligible as margin deposits under the rules of the CME.

[12] The Trust Registration Statement defines ''Business Day'' as any day (1) on which none of the following occurs: (a) The NYSE is closed for regular trading, (b) the CME is closed for regular trading, or (c) the Federal Reserve transfer system is closed for cash wire transfers, or (2) the Trustee determines that it is able to conduct business.

[13] Shares are separate and distinct from the underlying portfolio of the Trust. The Exchange expects that the number of outstanding Shares will increase and decrease as a result of in-kind deposits and withdrawals in the underlying portfolio.

[14] *See* NYSE Proposal, *supra* note 6.

[15] Telephone conversation between Lisa Dallmer, Vice President, NYSE Arca, Inc., and Florence Harmon, Senior Special Counsel, Division of Market Regulation (''Division''), Commission, and Angela Muehr, Attorney, Division, Commission, on June 21, 2006.

[16] The bid-ask price of Shares is determined using the highest bid and lowest offer as of the time of calculation of the NAV.

daily trading volume, closing prices, and the NAV.

Various data vendors and news publications publish futures prices and data. Futures quotes and last sale information for the commodities underlying the Index are widely disseminated through a variety of major market data vendors worldwide, including Bloomberg and Reuters. In addition, complete real-time data for such futures is available by subscription from Reuters and Bloomberg. The futures exchanges on which the underlying commodities and CERFs trade also provide delayed futures information on current and past trading sessions and market news generally free of charge on their respective Web sites. The specific contract specifications for the futures contracts are also available from the futures exchanges on their Web sites, as well as from other financial informational sources.

In order to provide updated information relating to the Trust for use by investors, professionals, and other persons, the NYSE will disseminate through the facilities of CTA an updated ITV on a per Share basis. The ITV will be disseminated at least every 15 seconds from 9:30 a.m. to 4:15 p.m. ET. The ITV will be calculated based on the cash and collateral in a Basket Amount divided by 50,000, adjusted to reflect the market value of the Index commodities through investments held by the Investing Pool, *i.e.* CERFs. The ITV will not reflect price changes to the price of an underlying commodity between the close of trading of the futures contract at the relevant futures exchange and the close of trading on the Exchange. Accordingly, the value of a Share may be influenced by non-concurrent trading hours between the Exchange and the various futures exchanges on which the futures contracts based on the Index commodities are traded.

When the market for futures trading for each of the Index commodities is open, the ITV can be expected to closely approximate the value per Share of the Basket Amount. However, during Exchange trading hours when the futures contracts have ceased trading, spreads and resulting premiums or discounts may widen, and, therefore, may increase the difference between the price of the Shares and the NAV of the Shares. ITV on a per Share basis should not be viewed as a real time update of the NAV, which is calculated only once a day.

The Exchange believes that dissemination of the ITV provides additional information that is not otherwise available to the public and is useful to professionals and investors in connection with the Shares trading on the Exchange or creation or redemption of the Shares.

(c) *Continued Listing and UTP Trading Criteria.*

While the Exchange immediately seeks to trade the Shares pursuant to UTP, the Exchange also proposes to adopt general initial and continued listing standards applicable to Commodity Index Trust Shares in the event the Exchange were to list such Commodity Index Trust Shares. In such an event, the Exchange would file with the Commission a Form 19b–4 to list such Commodity Index Trust Shares. When the Exchange is the listing exchange, the Trust shall be subject to the continued listing criteria under proposed NYSE ARCA Equities Rule 8.203(e).

Under the applicable continued listing criteria, a series of Commodity Index Trust Shares may be delisted as follows: (1) Following the initial twelve-month period beginning upon the commencement of trading of the Shares, there are fewer than 50 record and/or beneficial holders of the Shares for 30 or more consecutive trading days; (2) the value of the applicable Index ceases to be calculated or available on at least a 15-second basis from a source unaffiliated with the Sponsor, the Trust or the Trustee; (3) the ITV cease to be available on at least a 15-second delayed basis; (4) the NAV of the trust is not disseminated to all market participants at the same time,[17] or (5) such other event shall occur or condition exists that, in the opinion of the Exchange, makes further dealings on the Exchange inadvisable. In addition, the Exchange will remove Shares from listing and trading upon termination of the Trust.

If the Exchange is trading Commodity Index Trust Shares pursuant to UTP, such as the Shares, the Exchange will cease trading in the Shares if: (a) The listing market stops trading the Shares because of a regulatory halt similar to a halt based on NYSE ARCA Equities Rule 7.12 or a halt because the ITV or the value of the Index, the GSCI–ER, or the GSCI is no longer calculated or available or a halt because the NAV for the Trust is not disseminated to all market participants at the same time; [18] or (b) the listing market delists the Shares. Additionally, the Exchange may cease trading the Shares is such other event shall occur or condition exists which in the opinion of the Exchange makes further dealings on the Exchange inadvisable.

(d) *Trading Rules.*

The Exchange deems the Shares to be equity securities, thus rendering trading in the Shares subject to the Exchange's existing rules governing the trading of equity securities. Trading in the Shares on the Exchange will occur in accordance with NYSE ARCA Equities Rule 7.34(a), except that the Shares will not be eligible to trade during the Opening Session (4 a.m. to 9:30 a.m. ET) or the Late Trading Session (4:15 p.m. to 8 p.m. ET) unless the ITV is disseminated during that time.[19] The Exchange has appropriate rules to facilitate transactions in the Shares during this time. The minimum trading increment for Shares on the Exchange will be $0.01.

Further, the Exchange has proposed new NYSE ARCA Equities Rules 8.203(g)–(i), which set forth certain restrictions on equity trading permit holders (''ETP Holders'') acting as registered Market Makers in Commodity Index Trust Shares to facilitate surveillance. Proposed NYSE ARCA Equities Rule 8.203(h) requires that an ETP Holder acting as a registered Market Maker in the Shares provide the Exchange with information relating to its trading in the applicable physical commodities included in, or options, futures, or options on futures on the Index or any other derivatives based on the Index or based on any commodity included in such Index. Proposed NYSE ARCA Equities Rule 8.203(i) prohibits the ETP Holder acting as a registered Market Maker in the Shares from using any material nonpublic information received from any person associated with an ETP Holder or employee of such

[17] If the NAV is not disseminated to all market participants at the same time, the Exchange will immediately contact the Commission staff to discuss measures that may be appropriate under the circumstances.

[18] According to Amendment No. 2 to the NYSE's rule filing for the Trust (SR–NYSE–2006–17), the Trustee for the Trust (Barclay Global Investors International, Inc.) will make the NAV for the Trust available to all market participants at the same time.

[19] Until such time as the ITV is disseminated during the Opening Session and/or Late Trading Session, the Exchange expects to trade the Shares during the Core Session only, which is from 9:30 a.m. to 4:15 p.m. ET. In the event of after-hours trading, the Exchange will update NYSE Arca Equities Rule 7.34(a) pursuant to Rule 19b–4. Telephone conversation between Lisa Dallmer, Vice President, NYSE Arca, Inc., and Florence Harmon, Senior Special Counsel, Division of Market Regulation (''Division''), Commission, and Angela Muehr, Attorney, Division, Commission, on June 21, 2006.

Similarly, in the event of after-hours trading, if the Index value is updated during the early or late trading sessions by the Index Sponsor, it must be widely disseminated at least every 15 seconds during after hours trading sessions. Telephone conversation between Lisa Dallmer, Vice President, NYSE Arca, Inc., and Florence Harmon, Senior Special Counsel, Division of Market Regulation (''Division''), Commission, and Angela Muehr, Attorney, Division, Commission, on June 21, 2006.

person regarding trading by such person or employee in the applicable physical commodities included in, or options, futures or options on futures on, the Index or any other derivatives based on the Index or based on any commodity included in such Index (including the Shares). In addition, proposed NYSE ARCA Equities Rule 8.203(g) prohibits the ETP Holder acting as a registered Market Maker in the Shares from being affiliated with a market maker in the applicable physical commodities included in, or options, futures or options on futures in, the Index or any other derivatives based on the Index unless adequate information barriers are in place, as provided in NYSE ARCA Equities Rule 7.26.

With respect to trading halts, the Exchange may consider all relevant factors in exercising its discretion to halt or suspend trading in the Shares. Trading on the Exchange in the Shares may be halted because of market conditions or for reasons that, in the view of the Exchange, make trading in the Shares inadvisable. These may include: (1) The extent to which trading is not occurring in the physical commodities, or (2) whether other unusual conditions or circumstances detrimental to the maintenance of a fair and orderly market are present. In addition, trading in the Shares will be subject to trading halts caused by extraordinary market volatility pursuant to the Exchange's ''circuit breaker'' rule.[20]

If the Exchange is the listing market for Commodity Index Trust Shares, the Exchange will halt trading in the Shares if: (1) The value of the applicable underlying index, which is updated at least every 15 seconds from a source not affiliated with the sponsor, trust, or trustee, ceases to be available; (2) the ITV per Share, which is updated at least every 15 seconds, ceases to be available; (3) the NAV of the trust is not disseminated to all market participants at the same time;[21] or (4) the Exchange stops providing on the Exchange's Web site, via a hyperlink to the Trust's Web site, such index value or ITV.[22]

If the Exchange is trading the Commodity Index Trust Shares pursuant to UTP, such as the Shares, the Exchange will cease trading the Shares if (a) the listing market stops trading the Shares because of a regulatory halt similar to a halt based on NYSE ARCA Equities Rule 7.12 or a halt because the ITV or the value of each of the Index, the GSCI–ER and the GSCI is no longer calculated or available or a halt because the NAV for the Trust is not disseminated to all market participants at the same time[23] or (b) the listing market delists the Shares.

Commodity Index Trust Shares will be deemed ''Eligible Listed Securities,'' as defined in NYSE ARCA Equities Rule 7.55, for purposes of the Intermarket Trading System (''ITS'') Plan and therefore will be subject to the trade through provisions of NYSE ARCA Equities Rule 7.56, which requires the ETP Holders avoid initiating trade-throughs for ITS securities.

As a general matter, the Exchange has regulatory jurisdiction over its ETP Holders and any person or entity controlling an ETP Holder. The Exchange also has regulatory jurisdiction over a subsidiary or affiliate of an ETP Holder that is in the securities business. A subsidiary or affiliate of an EPT Holder that does business only in commodities or futures contracts would not be subject to Exchange jurisdiction, but the Exchange could obtain certain information regarding the activities of such subsidiary or affiliate through surveillance sharing agreements with regulatory organizations of which such subsidiary or affiliate is a member.

(c) *Surveillance.*

The Exchange intends to utilize its existing surveillance procedures applicable to derivative products and shares of the streetTRACKS Gold Trust[24] to monitor trading in the Shares. The Exchange represents that these procedures are adequate to monitor Exchange trading of the Shares.

The Exchange's current trading surveillance focuses on detecting securities trading outside its normal pattern. When such situations are detected, surveillance analysis follows and investigations are opened, where appropriate, to review the behavior of all relevant parties for all relevant trading violations. The Exchange is able to obtain information regarding trading in the Shares, the physical commodities included in, or options, futures or options on futures on, an index underlying an issue of Commodity Index Trust Shares or any other derivatives based on such index, through ETP Holders, in connection with such ETP Holders' proprietary or customer trades which they effect on any relevant market. With regard to the Index components, the Exchange can obtain market surveillance information, including customer identity information, with respect to transactions occurring on the New York Mercantile Exchange (''NYMEX''), the Kansas City Board of Trade. ICE Futures, and the London Metal Exchange (''LME''), pursuant to its comprehensive information sharing agreements with each of those exchanges. All of the other trading venues on which the current Index components are traded are members of the Intermarket Surveillance Group (''ISG''); therefore, the Exchange has access to all relevant trading information with respect to those contracts without any further action being required on the part of the Exchange.

If at any time the Index Sponsor includes in the Index a contract traded on any other market, which results in more than 10% of the cumulative weight of the Index not being subject to comprehensive surveillance sharing arrangements[25] (*e.g.,* is not a member or affiliate of the ISG or to which the Exchange does not have a preexisting comprehensive information sharing agreement), then, prior to the inclusion of such contract in the Index, the Exchange will (i) enter into adequate information sharing arrangements with that other market and (ii) contact the commission to discuss measures that may be appropriate under the circumstances, including whether the Exchange should file a form 19b–4 to seek Commission approval prior to the inclusion of the new contract in the Index.

(f) *Information Bulletin.*

Prior to the commencement of trading, the Exchange will inform its ETP Holders in an Information Bulletin of the special characteristics and risks associated with trading the Shares. Specifically, the Information Bulletin will discuss the following: (1) The procedures for purchases and redemptions of Shares in Baskets (and that Shares are not individually redeemable); (2) NYSE Arca Equities Rule 9.2(a),[26] which imposes a duty of

[20] *See* NYSE ARCA Equities Rule 7.12.

[21] If the NAV is not disseminated to all market participants at the same time, the Exchange will immediately contact the Commission staff to discuss measures that may be appropriate under the circumstances.

[22] Telephone conversation between Lisa Dallmer, Vice President, NYSE Arca, Inc., and Angela Muehr, Attorney, Division, Commission, on June 20, 2006.

[23] According to Amendment No. 2 to the NYSE's rule filing for the Trust (SR–NYSE–2006–17), the Sponsor for the Trust (Barclays Global Investors International, Inc.) has informed the NYSE that the Trustee for the Trust will make the NAV for the Trust available to all market participants at the same time.

[24] *See supra* note 4.

[25] Telephone conversation between Lisa Dallmer, Vice President, NYSE Arca, Inc., and Angela Muehr, Attorney, Division, Commission, on June 20, 2006.

[26] The Exchange has proposed to amend NYSE Arca Equities Rule 9.2(a) (''Diligence as to Accounts'') to provide that ETP Holders, before recommending a transaction, must have reasonable

due diligence on its ETP Holders to learn the essential facts relating to every customer prior to trading the Shares; (3) how information regarding the ITV is disseminated; (4) the requirement that ETP Holders deliver a prospectus to investors purchasing newly issued Shares prior to or concurrently with the confirmation of a transaction; and (5) trading information. For example, the Information Bulletin will advise ETP Holders, prior to the commencement of trading, of the prospectus delivery requirements applicable to the Trust. The Exchange notes that investors purchasing Shares directly from the Trust (by delivery of the Basket Amount) will receive a prospectus. ETP Holders purchasing Shares from the Trust for resale to investors will deliver a prospectus to such investors.

In addition, the Information Bulletin will reference the fact that the Trust is subject to various fees and expenses described in the Registration Statement. The Information Bulletin will also reference the fact that there is no regulated source of last sale information regarding physical commodities, and that the Commission has no jurisdiction over the trading of physical commodities or the futures contracts on which the value of the Shares is based.

2. Statutory Basis

The Exchange believes that the proposed rule change, as amended, is consistent with section 6(b) of the Act [27] in general and furthers the objectives of section 6(b)(5),[28] in particular, in that it is designed to promote just and equitable principles of trade, to foster cooperation and coordination with persons engaged in facilitating transactions in securities, to remove impediments and perfect the mechanisms of a free and open market, and to protect investors and the public interest.

In addition, the Exchange believes that the proposal is consistent with Rule 12f–5 under the Act [29] because it deems the Shares to be equity securities, thus rendering the Shares subject to the Exchange's existing, rules governing the trading of equity securities.[30]

B. Self-Regulatory Organization's Statement on Burden on Competition

The Exchange does not believe that the proposed rule change, as amended, will impose any burden on competition that is not necessary or appropriate in furtherance of the purposes of the Act.

C. Self-Regulatory Organization's Statement on Comments on the Proposed Rule Change Received From Members, Participants or Others

Written comments on the proposed rule change were neither solicited nor received.

III. Solicitation of Comments

Interested persons are invited to submit written data, views and arguments concerning the foregoing, including whether the proposed rule change is consistent with the Act. Comments may be submitted by any of the following methods:

Electronic Comments

- Use the Commission's Internet comment form (*http://www.sec.gov/rules/sro.shtml*); or
- Send an e-mail to *rule-comments@sec.gov.* Please include File Number SR–NYSEArca–2006–12 on the subject line.

Paper Comments

- Send paper comments in triplicate to Nancy M. Morris, Secretary, Securities and Exchange Commission, Station Place, 100 F Street, NE., Washington, DC 20549–1090.

All submissions should refer to File Number SR–NYSEArca–2006–12. This file number should be included on the subject line if e-mail is used. To help the Commission process and review your comments more efficiently, please use only one method. The Commission will post all comments on the Commission's Internet Web site (*http://www.sec.gov/rules/sro.shtml*). Copies of the submission, all subsequent amendments, all written statements with respect to the proposed rule change that are filed with the Commission, and all written communications relating to the proposed rule change between the Commission and any person, other than those that may be withheld from the public in accordance with the provisions of 5 U.S.C. 552, will be available for inspection and copying in the Commission's Public Reference Room. Copies of such filing also will be available for inspection and copying at the principal office of the Exchange. All comments received will be posted without change; the Commission does not edit personal identifying information from submissions. You should submit only information that you wish to make available publicly. All submissions should refer to File Number SR–NYSEArca–2006–12 and should be submitted on or before July 19, 2006.

IV. Commission's Findings and Order Granting Accelerated Approval of Proposed Rule Change

The Commission finds that the proposed rule change, as amended, is consistent with the requirements of the Act and the rules and regulations thereunder applicable to a national securities exchange.[31] In particular, the Commission finds that the proposed rule change is consistent with section 56(b)(5) of the Act,[32] which requires that an exchange have rules designed, among other things, to promote just and equitable principles of trade, to remove impediments to and perfect the mechanism of a free and open market and a national market system, and in general to protect investors and the public interest.

In addition, the Commission finds that the proposal is consistent with section 12(f) of the Act,[33] which permits an exchange to trade, pursuant to UTP, a security that is listed and registered on another exchange.[34] The Commission notes that it previously approved the listing and trading of the Shares on the NYSE.[35] The Commission also finds that the proposal is consistent with Rule 12f–5 under the Act,[36] which provides that an exchange shall not extent UTP to a security unless the exchange has in effect a rule or rules providing for transactions in the class or type of security to which the exchange extends

grounds to believe that the recommendation is suitable for the customer based on any facts disclosed by the customer as to his other security holdings and as to his financial situation and needs. Further, the proposed rule amendment provides that prior to the execution of a transaction recommended to a non-institutional customer, the ETP Holders should make reasonable efforts to obtain information concerning the customer's financial status, tax status, investment objectives and any other information that they believe would be useful to make a recommendation. *See* Amendment No. 1 to SR–PCX–2005–115 (November 21, 2005).

[27] 15 U.S.C. 78s(b).

[28] 15 U.S.C. 78s(b)(5).

[29] 17 CFR 240.12f–5.

[30] Telephone conversation between Lisa Dallmer, Vice President, NYSE Arca, Inc., and Florence Harmon, Senior Special Counsel, Division, Commission, and Angela Muehr, Attorney, Division, Commission, on June 21, 2006.

[31] In approving this rule change, the Commission notes that it has considered the proposed rule's impact on efficiency, competition, and capital formation. *See* 15 U.S.C. 78c(f).

[32] 15 U.S.C. 78f(b)(5).

[33] 15 U.S.C. 78*l*(f).

[34] Section 12(a) of the Act, 15 U.S.C. 78l(a), generally prohibits a broker-dealer from trading a security on a national securities exchange unless the security is registered on that exchange pursuant to section 12 of the Act. Section 12(f) of the Act excludes from this restriction trading in any security to which an exchange ''extends UTP.'' When an exchange extends UTP to a security, it allows its members to trade the security as if it were listed and registered on the exchange even though it is not so listed and registered.

[35] *See* NYSE Order, *supra* note 6.

[36] 17 CFR 240.12f–5.

UTP. NYSEArca rules deem the Shares to be equity securities; thus trading in the Shares will be subject to the Exchange's existing rules governing the trading of equity securities.

The Commission further believes that the proposal is consistent with section 11A(a)(1)(C)(iii) of the Act,[37] which sets forth Congress's finding that it is in the public interest and appropriate for the protection of investors and the maintenance of fair and orderly markets to assure the availability to brokers, dealers, and investors, of information with respect to quotations for and transactions in securities.

In support of the portion of the proposed rule change regarding UTP of the Shares, the Exchange has made the following representations:

1. The Exchange has appropriate rules to facilitate transactions in this type of security in all trading sessions.

2. The Exchange's surveillance procedures are adequate to properly monitor the trading of the Shares on the Exchange.

3. The Exchange will distribute an Information Bulletin to its members prior to the commencement of trading of the Shares on the Exchange that explains the special characteristics and risks of trading the Shares.

4. The Exchange will require a member with a customer who purchases newly issued Shares on the Exchange to provide that customer with a product prospectus and will note this prospectus delivery requirement in the Information Bulletin.

5. The Exchange will cease trading in the Shares if (1) the listing market stops trading the Shares because of a regulatory halt similar to a halt based on NYSE Arca Equities Rule 7.12 and/or a halt because the ITV or the value of each of the Index, the GSCI–ER and the GSCI,) or a halt because the NAV of the trust is not disseminated to all market participants at the same time; is no longer calculated or available or (2) the listing market delists the Shares. Additionally, the Exchange may cease trading the shares if such other event shall occur or condition exists which in the opinion of the Exchange makes further dealings on the Exchange inadvisable.

6. If, at any time, the Index Sponsor includes in the index a contract traded on any other market, which results in more than 10% of the cumulative weight of the Index not being subject to comprehensive surveillance sharing arrangements, then, prior to the inclusion of such contract in the Index, the Exchange will (i) enter into adequate information sharing arrangements with that other market and (ii) contact the commission to discuss measures that may be appropriate under the circumstances, including whether the Exchange should file a Form 19b–4 to seek Commission approval prior to the inclusion of the new contract in the Index.

This approval order is conditioned on the Exchange's adherence to these representations.

The Commission finds good cause for approving this proposed rule change before the thirtieth day after the publication of notice thereof in the **Federal Register**. As noted previously, the Commission previously found that the listing and trading of these Shares on the NYSE is consistent with the Act.[38] The Commission presently is not aware of any issue that would cause it to revisit that earlier finding or preclude the trading of these funds on the Exchange pursuant to UTP. Therefore, accelerating approval of this proposed rule change should benefit investors by creating, without undue delay, additional competition in the market for these Shares.

V. Conclusion

It is therefore ordered, pursuant to section 19(b)(2) of the Act, that the proposed rule change, as amended (SR–NYSEArca–2006–12), is hereby approved on an accelerated basis.[39]

For the Commission, by the Division of Market Regulation, pursuant to delegated authority.[40]

J. Lynn Taylor,

Assistant Secretary.

[FR Doc. 06–5757 Filed 6–27–06; 8:45 am]

BILLING CODE 8010–01–M

[37] 15 U.S.C. 78k–1(a)(1)(C)(iii).

[38] *See* NYSE Order, *supra* note 6.

[39] 15 U.S.C. 78s(b)(2).

[40] 17 CFR 200.30–3(a)(12).

DEPARTMENT OF STATE

[Public Notice 5458]

Bureau of Educational and Cultural Affairs (ECA) Request for Grant Proposals: Community College Summit Initiative Program

Announcement Type: New Cooperative Agreement.

Funding Opportunity Number: (ECA/A/S/U–06–10).

Catalog of Federal Domestic Assistance Number: 00.000.

Key Dates: Application Deadline: September 1, 2006.

Executive Summary: The Bureau of Educational and Cultural Affairs (ECA) announces an open competition for assistance awards to administer the Community College Summit Initiative Program, which will support international undergraduate students at accredited U.S. community colleges. The Bureau is launching this initiative to build on the achievements of the U.S. University Presidents Summit on International Education that was convened by the Secretary of State and the Secretary of Education in January 2006. The Program will provide quality educational programs, professional development, employment skills and a first-hand understanding of American society to underserved, non-elite international students, particularly women and students in their early/mid-twenties from selected priority countries who already have work experience. Projected participating countries include Brazil, Egypt, Indonesia, Pakistan, South Africa, and Turkey. Community college consortia or associations of community colleges meeting the provisions described in Internal Revenue Code section 501(c) may submit proposals to cooperate with the Bureau in the administration and implementation of the 2006 Community College Summit Initiative Program. The total amount of funding available for all program and administrative costs will be $3 million. Applicants may apply to administer the entire program or a portion thereof, proportionate to the program being proposed. Please indicate the number of participants that can be accommodated at the funding level for which you are applying, based on detailed calculations of program and administrative costs. In order to maximize the number of international student participants under this program, it is the Bureau's expectation that significant institutional and private sector funding and cost sharing will be made available by cooperating institutions to help defray the cost of the scholarships.

I. Funding Opportunity Description

Authority

Overall grant making authority for this program is contained in the Mutual Educational and Cultural Exchange Act of 1961, Public Law 87–256, as amended, also known as the Fulbright-Hays Act. The purpose of the Act is ''to enable the Government of the United States to increase mutual understanding between the people of the United States and the people of other countries * * *; to strengthen the ties which unite us with other nations by demonstrating the educational and cultural interests, developments, and achievements of the

people of the United States and other nations * * * and thus to assist in the development of friendly, sympathetic and peaceful relations between the United States and the other countries of the world. The funding authority for the program above is provided through legislation.

Purpose

The Community College Summit Initiative Program will demonstrate abroad the U.S. commitment to education for all by providing access to educational opportunities for a broader sector of international students. The Bureau hopes to engage the community college sector in the United States to increase the number of international students enrolled at U.S. community colleges, and to reinforce community college efforts to build international ties. U.S. community colleges can make a unique contribution to international educational exchange by demonstrating the flexibility and relevance of American higher education and the manner in which community colleges provide quality technical and first-level professional education to vital sectors of society that are essential for nations to move forward economically and politically. They can also provide a model of lower-cost community-based higher education that offers wide access to skills development to broad sectors of the population for existing jobs.

International students selected for academic study at accredited U.S. community colleges under this new initiative will receive educational opportunities, professional development, and an exposure to American society which will enable them to return home with unique skills and experience with which to contribute to the growth and development of their countries' societies. Upon return, these students will be able to enter the skilled work force and fill important needs in their home countries.

Guidelines

Applicant institutions are requested to submit a narrative outlining a comprehensive strategy for the administration and program implementation of the Community College Summit Initiative Program including the identification of accredited U.S. community colleges to host students in clusters based on one or more of the fields of study that are listed in the following section; the merit-based competitive selection of students based on the nomination of candidates by U.S. embassies and Fulbright commissions abroad for final approval by ECA; development and dissemination of pre-departure orientation materials; organization of post-arrival orientation programming; identification and placement of students, as needed, in pre-academic intensive English programs; placement of students for up to two years of U.S. study which may lead to an Associate Degree; enrichment programming; advising, monitoring and supporting participants; evaluation; and follow-up with program alumni. Applicants may apply for the entire program or to host one or more of the field-specific clusters.

We anticipate that students from each of the following six countries will be part of the program: Brazil, Egypt, Indonesia, Pakistan, South Africa and Turkey. The budget should provide funding for round-trip travel, pre-academic intensive English language training, tuition, books, and living costs as well as costs for program administration. Cost sharing is expected from cooperating institutions and the private sector.

For each field of study, students should be clustered at one or more colleges with a strong program of instruction in the field. The colleges may offer certificate programs, one-year programs, or two-year Associate Degree programs. Those proposals that focus most resources on more costly two-year programs should demonstrate significant levels of cost-sharing. Students should be placed in one of the following fields:

- Business Management and Administration.
- Tourism and Hospitality Management.
- Health Professions including Nursing.
- Media.
- Information Technology.
- Security and Public Safety.
- Engineering Science.

Pre-departure orientation materials and on-campus arrival orientation programs should be provided. Intensive English language training should be provided, preferably at the host institution, to those students who lack adequate English to function effectively in the U.S. classroom as evidenced by standardized test scores. Pre-arrival distance learning and in-country English training options may also be proposed. Host institutions should plan for practical training and service learning opportunities for participating students. Proposals should explain how students will be provided with enrichment activities, including creative ideas for exposing students to American institutions, society and culture. Proposals might include such activities as volunteer work and student presentations to college classes, local schools and the community, matching students with a local host family, and attendance at educational and cultural events with a U.S. focus. The proposal should demonstrate depth of experience in conducting international education programs.

Programs and projects must conform with the Bureau requirements and guidelines outlined in the Solicitation Package, which includes the Request for Grant Proposals (RFGP), the Project Objectives, Goals and Implementation (POGI) and the Proposal Submission Instructions (PSI).

In a cooperative agreement, the Bureau is substantially involved in program activities above and beyond routine grant monitoring. Bureau activities and responsibilities for this program include:

(1) Participation in the design and direction of program activities;

(2) Approval of key personnel;

(3) Approval and input on program timelines and agendas;

(4) Guidance in execution of all program components;

(5) Review and approval of all program publicity and other materials;

(6) Approval of candidate review committee members and participation in student selection panels;

(7) Approval of host campuses;

(8) Final selection of participating students;

(9) Approval of changes to students' proposed academic field or institution;

(10) Approval of decisions related to special circumstances or problems throughout duration of program;

(11) Assistance with SEVIS-related issues;

(12) Assistance with participant emergencies;

(13) Liaison with relevant U.S. Embassies, Fulbright commissions and country desk officers at the State Department.

Pending availability of funds, grants should begin on or around November 1, 2006 and will run through December 31, 2009. Grants will include both the administrative and program portions of the program such as: selection, placement, and monitoring of students possibly beginning intensive pre-academic English training in the Spring of 2007; selection, placement and monitoring of all students (including intensive English students) starting academic programs in Fall 2007; the preparation of pre-departure orientation materials and the organization of on-campus orientation programs for students; oversight and monitoring of

Practical Training and Service Learning opportunities for students; evaluation of all aspects of the program; and the administration of a creative program of follow-up support and coordination with program alumni.

II. Award Information

Type of Award: Cooperative Agreement.

ECA's level of involvement in this program is listed under number I above.

Fiscal Year Funds: 2006, carried over to 2007 for obligation.

Approximate Total Funding: $3,000,000.

Approximate Number of Awards: One or more.

Approximate Average Award: Up to $3,000,000.

Anticipated Award Date: November 1, 2006, pending availability of funds.

Anticipated Project Completion Date: December 31, 2009.

Additional Information: Pending successful implementation of this program and the availability of funds in subsequent fiscal years, it is ECA's intent to provide up to two additional grants to successful institutions for subsequent cohorts of students in addition to those covered by the initial award.

III. Eligibility Information

III.1. Eligible applicants: Applications may be submitted by consortia of accredited U.S. community colleges, or associations representing community colleges meeting the provisions described in Internal Revenue Code section 26 U.S.C. 501(c)(3). Consortia must designate a lead institution to receive the grant award.

III.2. Cost Sharing or Matching Funds: There is no minimum or maximum percentage required for this competition. However, the Bureau strongly encourages applicants to provide maximum levels of cost sharing and funding in support of its programs. Cost sharing at a significant level will be required for arrangements that include study leading to the two-year Associate Degree.

When cost sharing is offered, it is understood and agreed that the applicant must provide the amount of cost sharing as stipulated in its proposal and later included in an approved grant agreement. Cost sharing may be in the form of allowable direct or indirect costs. For accountability, you must maintain written records to support all costs which are claimed as your contribution, as well as costs to be paid by the Federal government. Such records are subject to audit. The basis for determining the value of cash and in-kind contributions must be in accordance with OMB Circular A–110, (Revised), Subpart C.23—Cost Sharing and Matching. In the event you do not provide the minimum amount of cost sharing as stipulated in the approved budget, ECA's contribution will be reduced in like proportion.

III.3. Other Eligibility Requirements: Bureau grant guidelines require that organizations with less than four years experience in conducting international exchanges be limited to $60,000 in Bureau funding.

IV. Application and Submission Information

Note: Please read the complete announcement before sending inquiries or submitting proposals. Once the RFGP deadline has passed, Bureau staff may not discuss this competition with applicants until the proposal review process has been completed.

IV.1.—Contact Information To Request an Application Package: Please contact the Office of Global Educational Programs, ECA/A/S/U, Room 349, U.S. Department of State, SA–44, 301 4th Street, SW., Washington, DC 20547; telephone 202–453–8862; fax 202–453–8890; e-mail *johnsonML3@state.gov* to request a Solicitation Package. Please refer to the Funding Opportunity Number (ECA/A/S/U–06–10) located at the top of this announcement when making your request.

Alternatively, an electronic application package may be obtained from grants.gov. Please see section IV.3f for further information.

The Solicitation Package contains the Proposal Submission Instruction (PSI) document which consists of required application forms, and standard guidelines for proposal preparation.

It also contains the Project Objectives, Goals and Implementation (POGI) document, which provides specific information, award criteria and budget instructions tailored to this competition.

Please specify Bureau Program Officer Michelle Johnson and refer to the Funding Opportunity Number (ECA/A/S/U–06–10) located at the top of this announcement on all other inquiries and correspondence.

IV.2. To Download a Solicitation Package Via Internet: The entire Solicitation Package may be downloaded from the Bureau's Web site at *http://exchanges.state.gov/education/rfgps/menu.htm,* or from the Grants.gov Web site at *http://www.grants.gov.* Please read all information before downloading.

IV.3. Content and Form of Submission: Applicants must follow all instructions in the Solicitation Package. The original and eight copies of the application should be sent per the instructions under IV.3f. ''Submission Dates and Times section'' below.

IV.3a. You are required to have a Dun and Bradstreet Data Universal Numbering System (DUNS) number to apply for a grant or cooperative agreement from the U.S. Government. This number is a nine-digit identification number, which uniquely identifies business entities. Obtaining a DUNS number is easy and there is no charge. To obtain a DUNS number, access *http://www.dunandbradstreet.com* or call 1–866–705–5711. Please ensure that your DUNS number is included in the appropriate box of the SF—424 which is part of the formal application package.

IV.3b. All proposals must contain an executive summary, proposal narrative and budget.

Please Refer to the Solicitation Package. It contains the mandatory Proposal Submission Instructions (PSI) document and the Project Objectives, Goals and Implementation (POGI) document for additional formatting and technical requirements.

IV.3c. You must have nonprofit status with the IRS at the time of application. If your organization is a private nonprofit which has not received a grant or cooperative agreement from ECA in the past three years, or if your organization received nonprofit status from the IRS within the past four years, you must submit the necessary documentation to verify nonprofit status as directed in the PSI document. Failure to do so will cause your proposal to be declared technically ineligible.

IV.3d. Please take into consideration the following information when preparing your proposal narrative:

IV.3d.1.—Adherence To All Regulations Governing the J Visa. The Bureau of Educational and Cultural Affairs is placing renewed emphasis on the secure and proper administration of Exchange Visitor (J visa) Programs and adherence by grantees and sponsors to all regulations governing the J visa. Therefore, proposals should demonstrate the applicant's capacity to meet all requirements governing the administration of the Exchange Visitor Programs as set forth in 22 CFR part 62, including the oversight of Responsible Officers and Alternate Responsible Officers, screening and selection of program participants, provision of pre-arrival information and orientation to participants, monitoring of participants, proper maintenance and security of forms, recordkeeping, reporting and other requirements.

The Grantee will be responsible for issuing DS–2019 forms to participants in this program. If the grantee organization or consortia member applying for this award does not have authority to issue DS–2019 forms, the organization should confer with the program officer designated in this RFGP.

A copy of the complete regulations governing the administration of Exchange Visitor (J) programs is available at *http://exchanges.state.gov* or from: United States Department of State, Office of Exchange Coordination and Designation, ECA/EC/ECD—SA–44, Room 734, 301 4th Street, SW., Washington, DC 20547. Telephone: (202) 203–5029. Fax: (202) 453–8640.

Please refer to Solicitation Package for further information.

IV.3d.2. Diversity, Freedom and Democracy Guidelines. Pursuant to the Bureau's authorizing legislation, programs must maintain a non-political character and should be balanced and representative of the diversity of American political, social, and cultural life. ''Diversity'' should be interpreted in the broadest sense and encompass differences including, but not limited to ethnicity, race, gender, religion, geographic location, socio-economic status, and disabilities. Applicants are strongly encouraged to adhere to the advancement of this principle both in program administration and in program content. Please refer to the review criteria under the 'Support for Diversity' section for specific suggestions on incorporating diversity into your proposal. Public Law 104–319 provides that ''in carrying out programs of educational and cultural exchange in countries whose people do not fully enjoy freedom and democracy,'' the Bureau ''shall take appropriate steps to provide opportunities for participation in such programs to human rights and democracy leaders of such countries.'' Public Law 106–113 requires that the governments of the countries described above do not have inappropriate influence in the selection process. Proposals should reflect advancement of these goals in their program contents, to the full extent deemed feasible.

IV.3d.3. Program Monitoring and Evaluation. Proposals must include a plan to monitor and evaluate the project's success, both as the activities unfold and at the end of the program. The Bureau recommends that your proposal include a draft survey questionnaire or other technique plus a description of a methodology to use to link outcomes to original project objectives. The Bureau expects that the grantee will track participants or partners and be able to respond to key evaluation questions, including satisfaction with the program, learning as a result of the program, changes in behavior as a result of the program, and effects of the program on institutions (institutions in which participants work or partner institutions). The evaluation plan should include indicators that measure gains in mutual understanding as well as substantive knowledge.

Successful monitoring and evaluation depend heavily on setting clear goals and outcomes at the outset of a program. Your evaluation plan should include a description of your project's objectives, your anticipated project outcomes, and how and when you intend to measure these outcomes (performance indicators). The more that outcomes are ''smart'' (specific, measurable, attainable, results-oriented, and placed in a reasonable time frame), the easier it will be to conduct the evaluation. You should also show how your project objectives link to the goals of the program described in this RFGP.

Your monitoring and evaluation plan should clearly distinguish between program *outputs* and *outcomes. Outputs* are products and services delivered, often stated as an amount. Output information is important to show the scope or size of project activities, but it cannot substitute for information about progress towards outcomes or the results achieved. Examples of outputs include the number of people trained or the number of seminars conducted. *Outcomes,* in contrast, represent specific results a project is intended to achieve and is usually measured as an extent of change. Findings on outputs and outcomes should both be reported, but the focus should be on outcomes.

We encourage you to assess the following four levels of outcomes, as they relate to the program goals set out in the RFGP (listed here in increasing order of importance):

1. Participant satisfaction with the program and exchange experience.
2. Participant learning, such as increased knowledge, aptitude, skills, and changed understanding and attitude. Learning includes both substantive (subject-specific) learning and mutual understanding.
3. Participant behavior, concrete actions to apply knowledge in work or community; greater participation and responsibility in civic organizations; interpretation and explanation of experiences and new knowledge gained; continued contacts between participants, community members, and others.
4. Institutional changes, such as increased collaboration and partnerships, policy reforms, new programming, and organizational improvements.

Please note: Consideration should be given to the appropriate timing of data collection for each level of outcome. For example, satisfaction is usually captured as a short-term outcome, whereas behavior and institutional changes are normally considered longer-term outcomes.

Overall, the quality of your monitoring and evaluation plan will be judged on how well it (1) specifies intended outcomes; (2) gives clear descriptions of how each outcome will be measured; (3) identifies when particular outcomes will be measured; and (4) provides a clear description of the data collection strategies for each outcome (i.e., surveys, interviews, or focus groups). (Please note that evaluation plans that deal only with the first level of outcomes [satisfaction] will be deemed less competitive under the present evaluation criteria.)

Grantees will be required to provide reports analyzing their evaluation findings to the Bureau in their regular program reports. All data collected, including survey responses and contact information, must be maintained for a minimum of three years and provided to the Bureau upon request.

IV.3d.4. Describe in your proposal your plans for: Overall program management, staffing, coordination with ECA and with community colleges enrolling clusters of students, intensive English language training and orientation, and practical learning and service opportunities for students. Please provide a staffing plan which outlines the responsibilities of each staff person and explains which staff members will be accountable for each program responsibility.

IV.3e. Please take the following information into consideration when preparing your budget:

IV.3e.1. Applicants must submit a comprehensive budget for the complete program or a portion of the program. The total funding available for this program is $3,000,000 for both program and administrative costs. Applicants may apply to administer a total budget of less than $3,000,000, proportionate to the program being requested. Please indicate clearly the number of students to be funded and the budget total for both administrative and program costs. Applicant institutions must present a summary budget as well as breakdowns reflecting both administrative and program budgets. Applicants may provide separate sub-budgets for each program component, phase, location, or activity to provide clarification.

IV.3e.2. Allowable costs for the program and additional budget guidance are outlined in detail in the POGI document.

Please refer to the Solicitation Package for complete budget guidelines and formatting instructions.

IV.3f. Application Deadline and Methods of Submission:

Application Deadline Date: Friday, September 1, 2006.

Reference Number: ECA/A/S/U–06–10.

Methods of Submission: Applications may be submitted in one of two ways:

(1) In hard-copy, via a nationally recognized overnight delivery service (i.e., DHL, Federal Express, UPS, Airborne Express, or U.S. Postal Service Express Overnight Mail, etc.), or

(2) Electronically through *http://www.grants.gov.* Along with the Project Title, all applicants must enter the above Reference Number in Box 11 on the SF–424 contained in the mandatory Proposal Submission Instructions (PSI) of the solicitation document.

IV.3f.1.—Submitting Printed Applications: Applications must be shipped no later than the above deadline. Delivery services used by applicants must have in-place, centralized shipping identification and tracking systems that may be accessed via the Internet and delivery people who are identifiable by commonly recognized uniforms and delivery vehicles. Proposals shipped on or before the above deadline but received at ECA more than seven days after the deadline will be ineligible for further consideration under this competition. Proposals shipped after the established deadlines are ineligible for consideration under this competition. ECA will not notify you upon receipt of application. It is each applicant's responsibility to ensure that each package is marked with a legible tracking number and to monitor/confirm delivery to ECA via the Internet. Delivery of proposal packages may not be made via local courier service or in person for this competition. Faxed documents will not be accepted at any time. Only proposals submitted as stated above will be considered.

Important note: When preparing your submission please make sure to include one extra copy of the completed SF–424 form and place it in an envelope addressed to ''ECA/EX/PM''.

The original and ten copies of the application should be sent to: U.S. Department of State, SA–44, Bureau of Educational and Cultural Affairs, Ref.: ECA/A/S/U–06–10, Program Management, ECA/EX/PM, Room 534, 301 4th Street, SW., Washington, DC 20547.

Applicants submitting hard-copy applications must also submit the ''Executive Summary'' and ''Proposal Narrative'' sections of the proposal in text (.txt) format on a PC-formatted disk. The Bureau will provide these files electronically to the appropriate Public Affairs Section(s) at the U.S. embassy(ies) for its(their) review.

IV.3f.2.—Submitting Electronic Applications:

Applicants have the option of submitting proposals electronically through Grants.gov (*http://www.grants.gov*). Complete solicitation packages are available at Grants.gov in the ''Find'' portion of the system. Please follow the instructions available in the 'Get Started' portion of the site (*http://www.grants.gov/GetStarted*).

Applicants have until midnight (12 a.m.), Washington, DC time of the closing date to ensure that their entire applications have been uploaded to the grants.gov site. Applications uploaded to the site after midnight of the application deadline date will be automatically rejected by the grants.gov system, and will be technically ineligible.

Applicants will receive a confirmation e-mail from grants.gov upon the successful submission of an application. ECA will *not* notify you upon receipt of electronic applications.

IV.3g. Intergovernmental Review of Applications: Executive Order 12372 does not apply to this program.

V. Application Review Information

V.1. Review Process: The Bureau will review all proposals for technical eligibility. Proposals will be deemed ineligible if they do not fully adhere to the guidelines stated herein and in the Solicitation Package. All eligible proposals will be reviewed by the program office, as well as the Public Diplomacy sections overseas, where appropriate. Eligible proposals will be subject to compliance with Federal and Bureau regulations and guidelines and forwarded to Bureau grant panels for advisory review. Proposals may also be reviewed by the Office of the Legal Adviser or by other Department elements. Final funding decisions are at the discretion of the Department of State's Assistant Secretary for Educational and Cultural Affairs. Final technical authority for cooperative agreements resides with the Bureau's Grants Officer.

Review Criteria

Technically eligible applications will be competitively reviewed according to the criteria stated below. These criteria are not rank ordered and all carry equal weight in the proposal evaluation:

1. Program Management and Planning: Your proposal narrative should exhibit originality, substance, precision, and relevance to the Bureau's mission as well as the objectives of the Community College Summit Initiative Program. Proposals should demonstrate an understanding of the participating world regions and of the needs of students from the region(s) as related to the program goals. A detailed agenda and relevant work plan should demonstrate substantive undertakings and logistical capacity for students placed in field-related clusters. The agenda and plan should adhere to the program overview and guidelines described above.

2. Ability to achieve program objectives: Objectives should be reasonable, feasible, and flexible. Proposals should clearly demonstrate how institutions will meet the Community College Summit Initiative Program's objectives and plan and should address each program component.

3. Multiplier effect/impact: Proposals should strengthen long-term mutual understanding, including maximum sharing of information and individual linkages. The proposed strategy should maximize the Program's potential to maintain community college links with alumni abroad.

4. Support of Diversity: Proposals should demonstrate substantive support of the Bureau's policy on diversity. Achievable and relevant features should be cited in both program administration (selection of participants, program venue and program evaluation) and program content (orientation and wrap-up sessions, academic programs, and follow-up activities). The applicant should clearly demonstrate how it will select, place, monitor and maintain contact with scholarship recipients representative of the diversity underserved, non-elite populations, especially women and older students with work experience from the six targeted countries. The U.S. study and enrichment programs should also incorporate and demonstrate the diversity of the American people, regions and cultures.

5. Institutional Capacity and Ability: Proposed personnel and institutional resources should be adequate and appropriate to achieve the program's goals. Proposals should describe the applicant's knowledge of, or prior experience with, students from the designated six countries, and the applicant's experience in training

students in the targeted subject fields. Proposals should demonstrate an institutional record of successful exchange programs involving the hosting of international students, including responsible fiscal management and full compliance with all reporting requirements for past Bureau grants. The Bureau will consider the past performance of prior recipients and the demonstrated potential of new applicants.

6. Follow-On Activities: Proposals should provide a plan for continued follow-on activity (without Bureau support) ensuring that Bureau supported programs are not isolated events. Activities should include tracking and maintaining updated lists of all alumni and facilitating follow-up activities with alumni, including electronic list serves.

7. Project Evaluation: Proposals should include a plan and methodology to evaluate the programs degree of success in meeting program objectives, both as the activities unfold and at the end of the program. A draft survey questionnaire or other technique plus description of a methodology to use to link outcomes to original project objectives is recommended. Successful applicants will be expected to submit intermediate reports after each project component is concluded, or quarterly, whichever is less frequent.

8. Cost-Effectiveness and Cost-Sharing: The overhead and administrative components of the proposal, including salaries and honoraria, should be kept as low as possible. All other items should be necessary and appropriate. Proposals should maximize cost sharing through institutional direct funding contributions and private sector support. Budget estimates should be as accurate as possible over the full period of the grant.

VI. Award Administration Information

VI.1a. Award Notices: Final awards cannot be made until funds have been appropriated by Congress, allocated and committed through internal Bureau procedures. Successful applicants will receive an Assistance Award Document (AAD) from the Bureau's Grants Office. The AAD and the original grant proposal with subsequent modifications (if applicable) shall be the only binding authorizing document between the recipient and the U.S. Government. The AAD will be signed by an authorized Grants Officer, and mailed to the recipient's responsible officer identified in the application.

Unsuccessful applicants will receive notification of the results of the application review from the ECA program office coordinating this competition.

VI.2.—Administrative and National Policy Requirements: Terms and Conditions for the Administration of ECA agreements include the following:

Office of Management and Budget Circular A–122, ''Cost Principles for Nonprofit Organizations.''

Office of Management and Budget Circular A–21, ''Cost Principles for Educational Institutions.''

OMB Circular A–87, ''Cost Principles for State, Local and Indian Governments''.

OMB Circular No. A–110 (Revised), Uniform Administrative Requirements for Grants and Agreements with Institutions of Higher Education, Hospitals, and other Nonprofit Organizations.

OMB Circular No. A–102, Uniform Administrative Requirements for Grants-in-Aid to State and Local Governments.

OMB Circular No. A–133, Audits of States, Local Government, and Non-profit Organizations.

Please reference the following Web sites for additional information:

http://www.whitehouse.gov/omb/grants.

http://exchanges.state.gov/education/grantsdiv/terms.htm#artic1eI.

VI.3. Reporting Requirements: You must provide ECA with a hard copy original plus one copy of the following reports: Quarterly financial reports; annual program reports for the first and second year of the agreement; and a final program and financial report no more than 90 days after the expiration of the award;

Grantees will be required to provide reports analyzing their evaluation findings to the Bureau in their regular program reports. (Please refer to IV. Application and Submission Instructions (IV.3.d.3) above for Program Monitoring and Evaluation information.

All data collected, including survey responses and contact information, must be maintained for a minimum of three years and provided to the Bureau upon request.

All reports must be sent to the ECA Grants Officer and ECA Program Officer listed in the final assistance award document.

VII. Agency Contacts

For questions about this announcement, contact: Michelle Johnson, Office of Global Educational Programs, ECA/A/S/U, Room 349, ECA/A/S/U–06–10, U.S. Department of State, SA–44, 301 4th Street, SW., Washington, DC 20547, telephone 202–453–8862, fax 202–453–8891, e-mail *JohnsonML3@state.gov.*

All correspondence with the Bureau concerning this RFGP should reference the above title and number ECA/A/S/U–06–10.

Please read the complete **Federal Register** announcement before sending inquiries or submitting proposals. Once the RFGP deadline has passed, Bureau staff may not discuss this competition with applicants until the proposal review process has been completed.

VIII. Other Information

Notice

The terms and conditions published in this RFGP are binding and may not be modified by any Bureau representative. Explanatory information provided by the Bureau that contradicts published language will not be binding. Issuance of the RFGP does not constitute an award commitment on the part of the Government. The Bureau reserves the right to reduce, revise, or increase proposal budgets in accordance with the needs of the program and the availability of funds. Awards made will be subject to periodic reporting and evaluation requirements per section VI.3 above.

Dated: June 22, 2006.

Dina Habib Powell,

Assistant Secretary for Educational and Cultural Affairs, Department of State.

[FR Doc. E6–10196 Filed 6–27–06; 8:45 am]

BILLING CODE 4710–05–P

DEPARTMENT OF STATE

[Public Notice 5453]

Announcement of Meetings of the International Telecommunication Advisory Committee

Summary: This notice announces a series of International Telecommunication Advisory Committee (ITAC) meetings to prepare for the September 2006 meetings of the International Telecommunication Union Telecommunication Development Sector (ITU–D) Study Groups 1 and 2.

The International Telecommunication Advisory Committee (ITAC) will meet to prepare for the September 2006 meetings of ITU–D Study Groups 1 and 2. Meetings are scheduled for Thursday afternoons, 2 p.m.–4 p.m., on July 13 and 27, and August 3, 10, and 17. All meetings will be held in Room 2533A of the Department of State Harry S Truman Building. A conference bridge will be available for those outside the Washington Metro area.

These meetings are open to the public. Particulars on conference bridges is available from the secretariat *minardje@state.gov,* telephone (202) 647–3234.

Dated: June 21, 2006.

Doreen McGirr,

Foreign Affairs Officer, International Communications & Information Policy, Department of State.

[FR Doc. 06–5869 Filed 6–27–06; 8:45 am]

BILLING CODE 4710–07–P

DEPARTMENT OF STATE

[Public Notice 5452]

Advisory Commission on Public Diplomacy; Notice of Meeting

The U.S. Advisory Commission on Public Diplomacy will hold a meeting on July 12, 2006, in Room 840 at the U.S. Department of State at 301 4th St., SW., Washington, DC 20547. The meeting will be held from 9 to 10 a.m. The Commissioners will discuss public diplomacy issues and progress made in evaluating public diplomacy programs.

The Commission was reauthorized pursuant to Public Law 109–108. (H.R. 2862, Science, State, Justice, Commerce, and Related agencies Appropriations Act, 2006). The U.S. Advisory Commission on Public Diplomacy is a bipartisan Presidentially appointed panel created by Congress in 1948 to provide oversight of U.S. Government activities intended to understand, inform and influence foreign publics. The Commission reports its findings and recommendations to the President, the Congress and the Secretary of State and the American people. Current Commission members include Barbara M. Barrett of Arizona, who is the Chairman; Harold Pachios of Maine; Ambassador Penne Percy Korth of Washington, DC; Ambassador Elizabeth Bagley of Washington, DC; Charles ''Tre'' Evers of Florida; Jay T. Snyder of New York; and Maria Sophia Aguirre of Washington, DC.

Seating is limited. To attend the meeting and for more information, please contact Carl Chan at (202) 203–7883, or (202) 203–7880.

Dated: June 22, 2006.

Carl Chan,

Interim Executive Director, ACPD, Department of State.

[FR Doc. 06–5863 Filed 6–27–06; 8:45 am]

BILLING CODE 4710–45–P

DEPARTMENT OF TRANSPORTATION

Federal Aviation Administration

Notice of Intent To Request Revision From the Office of Management and Budget of a Currently Approved Information Collection Activity, Request for Comments; Type Certification Procedures for Changed Products

AGENCY: Federal Aviation Administration (FAA), DOT.

ACTION: Notice and request for comments.

SUMMARY: The FAA invites public comments about our intention to request the Office of Management and Budget (OMB) to approve a current information collection. This rule may require applicants to comply with the latest regulations in effect on the date of application for amended Type Certificates (TC) or a Supplemental TCs for aeronautical products.

DATES: Please submit comments by August 28, 2006.

FOR FURTHER INFORMATION CONTACT: Carla Mauney on (202) 267–9895, or by e-mail at: *Carla.Mauney@faa.gov.*

SUPPLEMENTARY INFORMATION:

Federal Aviation Administration (FAA)

Title: Type Certification Procedures for Changed Products.

Type of Request: Revision of an approved collection.

OMB Control Number: 2120–0657.

Form(s): There are no FAA forms associated with this collection.

Affected Public: A total of 2558 Respondents.

Frequency: The information is collected as needed.

Estimated Average Burden per Response: Approximately 7.35 hours per response.

Estimated Annual Burden Hours: An estimated 18,815 hours annually.

Abstract: This rule may require applicants to comply with the latest regulations in effect on the date of application for amended Type Collection (TC) or a Supplemental TCs for aeronautical products. They now may incur an additional incremental administrative cost to determine the level of significance of the product change.

ADDRESSES: Send comments to the FAA at the following address: Ms. Carla Mauney, Room 1033, Federal Aviation Administration, Information Systems and Technology Services Staff, ABA–20, 800 Independence Ave., SW., Washington, DC 20591.

Comments are invited on: Whether the proposed collection of information is necessary for the proper performance of the functions of the Department, including whether the information will have practical utility; the accuracy of the Department's estimates of the burden of the proposed information collection; ways to enhance the quality, utility, and clarity of the information to be collected; and ways to minimize the burden of the collection of information on respondents, including the use of automated collection techniques or other forms of information technology.

Issued in Washington, DC, on June 23, 2006.

Carla Mauney,

FAA Information Collection Clearance Officer, Information Systems and Technology Services Staff, ABA–20.

[FR Doc. 06–5749 Filed 6–27–06; 8:45 am]

BILLING CODE 4910–13–M

DEPARTMENT OF TRANSPORTATION

Federal Aviation Administration

Notice of Intent To Request Revision From the Office of Management and Budget of a Currently Approved Information Collection Activity, Request for Comments; Noise Certification Standards for Subsonic Jet Airplanes and Subsonic Transport Category Large Airplanes

AGENCY: Federal Aviation Administration (FAA), DOT.

ACTION: Notice and request for comments.

SUMMARY: The FAA invites public comments about our intention to request the Office of Management and Budget (OMB) to approve a current information collection. The information collected is needed for the applicant's noise certification compliance report in order to demonstrate compliance with 14 CFR part 36.

DATES: Please submit comments by August 28, 2006.

FOR FURTHER INFORMATION CONTACT: Carla Mauney on (202) 267–9895, or by e-mail at: *Carla.Mauney@faa.gov.*

SUPPLEMENTARY INFORMATION:

Federal Aviation Administration (FAA)

Title: Noise Certification Standards for Subsonic Jet Airplanes and Subsonic Transport Category Large Airplanes.

Type of Request: Revision of an approved collection.

OMB Control Number: 2120–0659.

Form(s): There are no FAA forms associated with this collection.

Affected Public: A total of 10 Respondents.

Frequency: The information is collected as needed.

Estimated Average Burden per Response: Approximately 135 hours per response.

Estimated Annual Burden Hours: An estimated 1,350 hours annually.

Abstract: Section A36.5.2 and A36.5.2.5 of the Federal Aviation Administration (FAA) noise certification standards for subsonic jet airplanes and subsonic transport category large airplanes (14 CFR part 36) contain information collection requirements. The information collected is needed for the applicant's noise certification compliance report in order to demonstrate compliance with part 36.

ADDRESSES: Send comments to the FAA to the following address: Ms. Carla Mauney, Room 1033, Federal Aviation Administration, Information Systems and Technology Services Staff, ABA–20, 800 Independence Ave., SW., Washington, DC 20591.

Comments are invited on: Whether the proposed collection of information is necessary for the proper performance of the functions of the Department, including whether the information will have practical utility, the accuracy of the Department's estimates of the burden of the proposed information collection; ways to enhance the quality, utility and clarity of the information to be collected; and ways to minimize the burden of the collection of information on respondents, including the use of automated collection techniques or other forms of information technology.

Issued in Washington, DC, on June 23, 2006.

Carla Mauney,

FAA Information Collection Clearance Officer, Information Systems and Technology Services Staff, ABA–20.

[FR Doc. 06–5750 Filed 6–27–06; 8:45 am]

BILLING CODE 4910–13–M

DEPARTMENT OF TRANSPORTATION

Federal Aviation Administration

Notice of Intent To Request Revision From the Office of Management and Budget of a Currently Approved Information Collection Activity, Request for Comments; FAA Research and Development Grants

AGENCY: Federal Aviation Administration (FAA), DOT.

ACTION: Notice and request for comments.

SUMMARY: The FAA invites public comments about our intention to request the Office of Management and Budget (OMB) to approve a current information collection. The FAA Aviation Research and Development Grants Program establishes uniform policies and procedures for the award and administration of research grants to colleges, universities, not for profit organizations, and profit organizations for security research.

DATES: Please submit comments by August 28, 2006.

FOR FURTHER INFORMATION CONTACT: Carla Mauney on (202) 267–9895, or by e-mail at: *Carla.Mauney@faa.gov.*

SUPPLEMENTARY INFORMATION:

Federal Aviation Administration (FAA)

Title: FAA Research and Development Grants.

Type of Request: Revision of an approved collection.

OMB Control Number: 2120–0559.

Forms(s): FAA–9550–1–5, SF–5, SF–269, SF–270, SF–272, SF–LLI.

Affected Public: A total of 100 Respondents.

Frequency: The information is collected as semi-annually.

Estimated Average Burden per Response: Approximately 14 hours per response.

Estimated Annual Burden Hours: An estimated 1,400 hours annually.

Abstract: The FAA Aviation Research and Development Grants Program establishes uniform policies and procedures for the award and administration of research grants to colleges, universities, not for profit organizations, and profit organizations for security research. This program implements OMB Circular A–110, Pub. L. 101–508 Section 9205 and 9208 and Pub. L. 101–604, Section 107(d).

ADDRESSES: Send comments to the FAA at the following address: Ms. Carla Mauney, Room 1033, Federal Aviation Administration, Information Systems and Technology Services Staff, ABA–20, 800 Independence Ave., SW., Washington, DC 20591.

Comments are invited on: Whether the proposed collection of information is necessary for the proper performance of the functions of the Department, including whether the information will have practical utility; the accuracy of the Department's estimates of the burden of the proposed information collection; ways to enhance the quality, utility and clarity of the information to be collected; and ways to minimize the burden of the collection of information on respondents, including the use of automated collection techniques or other forms of information technology.

Issued in Washington, DC, on June 23, 2006.

Carla Mauney,

FAA Information Collection Clearance Officer, Information Systems and Technology Services Staff, ABA–20.

[FR Doc. 06–5751 Filed 6–27–06; 8:45 am]

BILLING CODE 4910–13–M

DEPARTMENT OF TRANSPORTATION

Federal Aviation Administration

Notice of Intent To Request Revision From the Office of Management and Budget of a Currently Approved Information Collection Activity, Request for Comments; Laser Operations in the Navigable Airspace (Advisory Circular (AC), Outdoor Laser Operations)

AGENCY: Federal Aviation Administration (FAA), DOT.

ACTION: Notice and request for comments.

SUMMARY: The FAA invites public comments about our intention to request the Office of Management and Budget (OMB) to approve a current information collection. The FAA requires the information in the interest of aviation safety to protect aircraft operations from the potential hazardous effects of laser emissions.

DATES: Please submit comments by August 28, 2006.

FOR FURTHER INFORMATION CONTACT: Carla Mauney on (202) 267–9895, or by e-mail at: *Carla.Mauney@faa.gov.*

SUPPLEMENTARY INFORMATION:

Federal Aviation Administration (FAA)

Title: Laser Operations in the Navigable Airspace (Advisory Circular (AC), Outdoor Laser Operations)

Type of Request: Revision of an approved collection.

OMB Control Number: 2120–0662.

Forms(s): There are no FAA forms associated with this collection.

Affected Public: A total of 20 respondents.

Frequency: The information is collected as needed.

Estimated Average Burden per Response: Approximately 11 hours per response.

Estimated Annual Burden Hours: An estimated 2,200 hours annually.

Abstract: The FAA requires the information in the interest of aviation safety to protect aircraft operations from the potential hazardous effects of laser emissions. The information collected is reviewed for its impact on aviation in the vicinity of the laser activity. Upon

completion of the review of the information the FAA issues a letter of determination to the respondent in regard to their request.

ADDRESSES: Send comments to the FAA at the following address: Ms. Carla Mauney, Room 1033, Federal Aviation Administration, Information Systems and Technology Services Staff, ABA–20, 800 Independence Ave., SW., Washington, DC 20591.

Comments are invited on: Whether the proposed collection of information is necessary for the proper performance of the functions of the Department, including whether the information will have practical utility; the accuracy of the Department's estimates of the burden of the proposed information collection; ways to enhance the quality, utility and clarity of the information to be collected; and ways to minimize the burden of the collection of information on respondents, including the use of automated collection techniques or other forms of information technology.

Issued in Washington, DC, on June 23, 2006.

Carla Mauney,

FAA Information Collection Clearance Officer, Information Systems and Technology Services Staff, ABA–20.

[FR Doc. 06–5752 Filed 6–27–06; 8:45 am]

BILLING CODE 4910–13–M

DEPARTMENT OF TRANSPORTATION

Federal Aviation Administration

Office of Commercial Space Transportation; Notice of Availability and Request for Comment on a Draft Environmental Assessment (EA) for the Blue Origin West Texas Commercial Launch Site

AGENCY: Federal Aviation Administration (FAA), Office of Commercial Space Transportation (AST) is the lead Federal agency for the development of this EA.

ACTION: Notice of availability and request for comment.

SUMMARY: In accordance with National Environmental Policy Act (NEPA) regulations, the FAA is announcing the availability of and requesting comments on the Draft EA for the Blue Origin West Texas Commercial Space Launch Site.

Under the proposed action, the FAA would issue one or more experimental permits and/or licenses to Blue Origin to launch reusable launch vehicles (RLVs) [1] on suborbital, ballistic trajectories. In addition, Blue Origin would construct a private launch site, which would include a vehicle processing facility, launch complex, vehicle landing and recovery area, space flight participant training facility, and other minor support facilities. The EA evaluates potential impacts to the environment from the proposed activities. The FAA may use the analysis in the EA as the basis for making a determination to prepare an Environmental Impact Statement or a Finding of No Significant Impact regarding the issuance of a license and/or permit(s) to Blue Origin.

DATES: The public comment period for the NEPA process begins with distribution of the Draft EA. To ensure that all comments can be addressed in the Final EA, comments must be received by the FAA no later than July 27, 2006. The Draft EA is available for download at *http://ast.faa.gov.* A paper copy of the Draft EA can also be viewed at the Van Horn City County Library at 410 Crockett Street, Van Horn, Texas 79855.

A public hearing will be held at 6:30 p.m., Tuesday, July 25, 2006 at the Van Horn Convention Center at 1801 West Broadway, Van Horn, Texas 79855.

Contact Information: Comments, statements, or questions concerning the Draft EA should be mailed to Mr. Doug Graham, FAA Environmental Specialist, FAA Blue Origin EA c/o ICF Consulting, 9300 Lee Highway, Fairfax, VA 22031. Comments can also be sent by e-mail to *BlueOriginEA@icfi.com* or by fax to 703–934–3951.

Additional Information: Under the proposed action, the FAA would issue one or more experimental permits and appropriate licenses to Blue Origin to authorize Blue Origin to conduct the activities described in the EA. Blue Origin proposes to launch space flight participant-carrying RLVs on suborbital, ballistic trajectories. To conduct these operations, Blue Origin proposes to construct a private launch site on privately-owned land in Culberson County, Texas.

Blue Origin proposes to develop, launch, and land a suborbital RLV referred to as the New Shepard Reusable Launch System. Blue Origin proposes to develop the RLV incrementally, beginning with low-altitude vehicle testing, progressing to higher-altitude testing, and culminating with commercial flights.

Blue Origin's proposed activities would include:

Construction of an RLV launch site and landing/recovery area,

Launch and landing/recovery operations,

Space flight participant training activities, and

Sustained commercial launch, flight, landing, and recovery of space flight participants.

The FAA considered the no action alternative in addition to the proposed action in the Draft EA. Two alternatives were considered but dismissed. One alternative would use an alternative facility configuration, and another alterative would use a different plot of land in Culberson County. Different locations of the proposed facility layout within the proposed site boundaries were also considered and dismissed. Under the no action alternative, the FAA would not issue permits or licenses to Blue Origin to conduct launch operations in Culberson County, Texas. Blue Origin would not conduct RLV testing or launch operations, and the proposed site in Culberson County would remain private property.

Potential impacts of the proposed action and alternatives were analyzed in the Draft EA. Potential environmental impacts of successful launches include impacts to the air resources, ecological resources, cultural/Native American resources, hazardous materials and hazardous waste management, health and safety, geology and soils, land use, noise, socioeconomics and environmental justice, transportation, visual and aesthetic resources, and water resources. Department of Transportation Section 4(f) lands are addressed as part of land use; floodplains, wetlands, and wild and scenic rivers are addressed as part of water resources; and natural resources and energy supply are addressed as part of socioeconomics. Potential impacts of the no action alternative would be the same as those described in the affected environment in the Draft EA. Potential cumulative impacts of the proposed action also are addressed in the Draft EA.

Date Issued: June 16, 2006.

Place Issued: Washington, DC.

Herbert Bachner,

Manager, Space Systems Development Division.

[FR Doc. E6–10191 Filed 6–27–06; 8:45 am]

BILLING CODE 4910–13–P

[1] RLVs are launch vehicles that have stages or components that can return to Earth and be recovered or reused. A suborbital rocket is a vehicle, rocket-propelled in whole or in part, intended for flight on a suborbital trajectory, and the thrust of which is greater than its lift for the majority of the rocket-powered portion of its ascent. (49 U.S.C. 70102(19)).

DEPARTMENT OF TRANSPORTATION

Federal Aviation Administration

Notice of Availability of an Environmental Assessment (EA) and Finding of No Significant Impact/ Record of Decision (FONSI/ROD) Executed by the Federal Aviation Administration (FAA) for the Evaluation of Environmental Impacts Associated With the Construction of a New 4,100 Foot General Aviation Runway and Associated Support Facilities (i.e., Taxiways, Hangars, Access Roads, etc.) for W.K. Kellogg Airport, Located in Battle Creek, MI

AGENCY: Federal Aviation Administration, Department of Transportation.

ACTION: Notice of availability of an EA and FONSI/ROD executed by the FAA for the evaluation of environmental impacts associated with a proposed new 4,100 foot General Aviation runway for W.K. Kellogg Airport located in Battle Creek, Michigan.

SUMMARY: The FAA is making available an EA and FONSI/ROD for the evaluation of environmental impacts associated with proposed construction of a new 4,100 foot General Aviation runway executed by the FAA, for the W.K. Kellogg Airport located in Battle Creek, Michigan.

Point of Contact: Mr. Brad Davidson, Environmental Protection Specialist, FAA Great Lakes Region, Detroit Airports District Office, 11677 South Wayne Road, Suite 107, Romulus, MI 48174 (734) 229–2900.

SUPPLEMENTARY INFORMATION: The FAA is making available an EA and FONSI/ ROD for the evaluation of environmental impacts associated with a proposed new 4,100 foot General Aviation runway, executed by the FAA, for the W.K. Kellogg Airport located in Battle Creek, Michigan. The purpose of the EA and FONSI/ROD was to evaluate potential environmental impacts arising from the proposed airport improvement project involving the construction of a new 4,100 foot General Aviation runway.

These documents will be available during normal business hours at the following location: FAA Detroit Airports District Office, 11677 South Wayne Road, Suite 107, Romulus, MI 48174.

Due to current security requirements, arrangements must be made with the point of contact prior to visiting this office.

Issued in Detroit, Michigan, June 15, 2006.

Irene R. Porter,

Manager, Detroit Airport District Office, FAA, Great Lakes Region.

[FR Doc. 06–5731 Filed 6–27–06; 8:45 am]

BILLING CODE 4910–13–M

DEPARTMENT OF TRANSPORTATION

Federal Aviation Administration

Sixth Meeting, RTCA Special Committee 204: 406 MHz Emergency Locator Transmitters

AGENCY: Federal Aviation Administration (FAA), DOT.

ACTION: Notice of RTCA Special Committee 204 meeting.

SUMMARY: The FAA is issuing this notice to advise the public of a meeting of RTCA Special Committee 204: 406 MHz Emergency Locator Transmitters.

DATES: The meeting will be held on July 19–20, 2006, from 9 a.m. to 5 p.m.

ADDRESSES: The meeting will be held at RTCA, Inc., Colson Board Room, 1828 L Street, NW., Suite 805, Washington, DC 20036–5133.

FOR FURTHER INFORMATION CONTACT: RTCA Secretariat, 1828 L Street, NW., Suite 805, Washington, DC 20036–5133; telephone (202) 833–9339; fax (202) 833–9434; Web site *http://www.rtca.org*.

SUPPLEMENTARY INFORMATION: Pursuant to section 10(a)(2) of the Federal Advisory Committee Act (Pub. L. 92–463), 5 U.S.C., Appendix 2), notice is hereby given for a Special Committee 202 meeting. The agenda will include:

- July 19–20, 2006:
  - —Opening Session (Welcome, Introductory and Administrative Remarks, Review Agenda, Review Terms of Reference/Status).
  - —Approval of Summary for the Fourth meeting held on 14–15 March 2006, RTCA Paper No. 106–06/SC204–015.
- EUROCAE ELT Status.
- Committee Presentations, Discussion, Recommendations:
  - —Revisions/Updates to DO–204—*Minimum Operational Performance Standards for 406 MHz Emergency Locator Transmitters (ELT).*
  - —Discuss adding testing of 121.5 MHz to DO–204 and using DO–183 only for TSO C91a ELTs.
  - —Discuss changing 121.5 MHz modulations duty cycle to conserve power.
  - —Any New Items Discussions.
  - —Revisions/Updates to DO–183—*Minimum Operational Performance. Standards for Emergency Locator Transmitters—Automatic Fixed-ELT (AF), Automatic Portable-ELT (AP), Automatic Deployable-ELT (AD), Survival-ELT (S) Operating on 121.5 and 243.0 Megahertz.*
  - —Closing Session (Other Business, Assignment/Review of Future Work, Date and Place of Next Meeting, Closing Remarks, Adjourn).

Attendance is open to the interested public but limited to space availability. With the approval of the chairmen, members of the public may present oral statements at the meeting. Persons wishing to present statements or obtain information should contact the person listed in the **FOR FURTHER INFORMATION CONTACT** section. Members of the public may present a written statement to the committee at any time.

Issued in Washington, DC, on June 20, 2006.

Francisco Estrada C.,

RTCA Advisory Committee.

[FR Doc. 06–5753 Filed 6–27–06; 8:45 am]

BILLING CODE 4910–13–M

DEPARTMENT OF TRANSPORTATION

Federal Aviation Administration

Notice of Passenger Facility Charge (PFC) Approvals and Disapprovals

AGENCY: Federal Aviation Administration (FAA), DOT.

ACTION: Monthly notice of PFC approvals and disapprovals. In May 2006, there were six applications approved. This notice also includes information on two applications, one approved in February 2006 and the other approved in April 2006, inadvertently left off the February 2006 and April 2006 notices, respectively. Additionally, 11 approved amendments to previously approved applications are listed.

SUMMARY: The FAA publishes a monthly notice, as appropriate, of PFC approvals and disapprovals under the provisions of the Aviation Safety and Capacity Expansion Act of 1990 (Title IX of the Omnibus Budget Reconciliation Act of 1990) (Pub. L. 101–508) and part 158 of the Federal Aviation Regulations (14 CFR part 158). This notice is published pursuant to paragraph d of § 158.29.

PFC Applications Approved

Public Agency: City of Philadelphia, Pennsylvania.

Application Number: 06–10–C–00–PHL.

Application Type: Impose and use a PFC.

PFC Level: $4.50.

Total PFC Revenue Approved in this Decision: $83,250,000.

Earliest Charge Effective Date: March 1, 2008.

Estimated Charge Expiration Date: June 1, 2009.

Class of Air Carriers Not Required to Collect PFC's: Air taxi/commercial operators filing FAA Form 1800–31.

Determination: Approved. Based on information contained in the public agency's application, the FAA has determined that the proposed class accounts for less than 1 percent of the total annual enplanements at Philadelphia International Airport.

Brief Description of Projects Approved for Collection and Use at a $4.50 PFC Level:

Terminals D and E expansion and modernization.

Terminal A east improvements.

Purchase of passenger loading bridges.

Brief Description of Projects Approved for Collection and Use at a $3.00 PFC Level:

Terminal D–E apron and adjacent taxiway J reconstruction.

Airport master plan.

Environmental impact statements.

Land acquisition—8425 Executive Avenue.

Decision Date: February 16, 2006.

For Further Information Contact: Lori Ledebohm, Harrisburg, Airports District Office, (717) 730–2835.

Public Agency: Erie Municipal Airport Authority, Erie, Pennsylvania.

Application Number: 06–06–C–00–ERI.

Application Type: Impose and use a PFC.

PFC Level: $4.50.

Total PFC Revenue Approved in this Decision: $3,140,337.

Earliest Charge Effective Date: November 1, 2006.

Estimated Charge Expiration Date: September 1, 2012.

Class of Air Carriers Not Required to Collect PFC's: Air taxi/commercial operators filing FAA Form 1800–31.

Determination: Approved. Based on information contained in the public agency's application, the FAA has determined that the proposed class accounts for less than 1 percent of the total annual enplanements at Erie International Airport—Tom Ridge Field.

Brief Description of Projects Approved for Collection and Use:

Terminal apron rehabilitation.

Security checkpoint modifications.

Heating, ventilation, and air conditioning system replacement.

Oil/water separator for maintenance building.

Snow plows (two).

PFC application preparation costs

PFC program administration.

Brief Description of Project Approved for Collection: Runway 6/24 extension and runway safety areas improvements.

Decision Date: April 13, 2006.

For Further Information Contact: Lori Ledebohm, Harrisburg Airports District Office, (717) 730–2835.

Public Agency: Lafayette Airport Commission, Lafayette, Louisiana.

Application Number: 06–05–C–00–LFT.

Application Type: Impose and use a PFC.

PFC Level: $4.50.

Total PFC Revenue Approved in this Decision: $795,000.

Earliest Charge Effective Date: February 1, 2007.

Estimated Charge Expiration Date: May 1, 2008.

Class of Air Carriers Not Required to Collect PFC's: All air taxi/commercial operators.

Determination: Approved. Based on information contained in the public agency's application, the FAA has determined that the proposed class accounts for less than 1 percent of the total annual enplanements at Lafayette Regional Airport.

Brief Description of Projects Approved for Collection and Use:

Acquire aircraft rescue and firefighting vehicle.

PFC development, implementation, and administration.

Decision Date: May 2, 2006.

For Further Information Contact: Andy Velayos, Louisiana/New Mexico Airports Development Office, (817) 222–5647.

Public Agency: Missoula County Airport Authority, Missoula, Montana.

Application Number: 06–06–C–00–MSO.

Application Type: Impose and use a PFC

PFC Level: $4.50.

Total PFC Revenue Approved in this Decision: $3,334,760.

Earliest Charge Effective Date: June 1, 2007.

Estimated Charge Expiration Date: August 1, 2010.

Class of Air Carriers Not Required to Collect PFC's: Nonscheduled/on demand air carriers filing FAA Form 1800–31.

Determination: Approved. Based on information contained in the public agency's application, the FAA has determined that the proposed class accounts for less than 1 percent of the total annual enplanements at Missoula International Airport.

Brief Description of Projects Approved for Collection and Use:

Acquire aircraft rescue and firefighting equipment.

Acquire snow removal equipment—combination plow.

Acquire snow removal equipment—alternate sweeper (vacuum truck).

Acquire passenger loading bridges.

Install security gates.

Security enhancements.

Rehabilitate runway 7/25.

Rehabilitate central portion of taxiway A.

Decision Date: May 5, 2006.

For Further Information Contact: Dave Stelling, Helena Airports District Office, (406) 449–5271.

Public Agency: County of Routt, Hayden, Colorado.

Application Number: 06–07–C–00–HDN.

Application Type: Impose and use a PFC.

PFC Level: $4.50.

Total PCF Revenue Approved in this Decision: $2,199,678.

Earliest Charge Effective Date: July 1, 2008.

Estimated Charge Expiration Date: August 1, 2012.

Class of Air Carriers Not Required to Collect PFC's: None.

Brief Description of Projects Approved for Collection and Use:

Commercial terminal expansion—phase II.

Air carrier parking apron.

Rehabilitate air carrier apron.

Construction of new terminal roadway.

Snow removal equipment.

PFC application and administration.

Decision Date: May 12, 2006.

For Further Information Contact: Chris Schaffer, Denver Airports District Office, (303) 342–1258.

Public Agency: Horry County Department of Airports, Myrtle Beach, South Carolina.

Application Number: 06–03–C–00–MYR.

Application Type: Impose and use a PFC.

PFC Level: $4.50.

Total PFC Revenue Approved in this Decision: $111,182,626.

Earliest Charge Effective Date: October 1, 2007.

Estimated Charge Expiration Date: November 1, 2029.

Class of Air Carriers Not Required to Collect PFC's: Air taxi/commercial operators filing FAA Form 1800–31.

Determination: Approved. Based on information contained in the public agency's application, the FAA has determined that the proposed class accounts for less than 1 percent of the total annual enplanements at Myrtle Beach International Airport.

Brief Description of Projects Approved for Collection and Use:

New terminal program—airfield.

New terminal program—roadway.

New terminal program—terminal building.

Decision Date: May 15, 2006.

For Further Information Contact: Paul Lo, Atlanta Airports District Office, (404) 305–7145.

Public Agency: City of El Paso, Texas.

Application Number: 06–03–C–00–ELP.

Application Type: Impose and use a PFC.

PFC Level: $3.00

Total PFC Revenue Approved in this Decision: $15,748,267.

Earliest Charge Effective Date: July 1, 2006.

Estimated Charge Expiration Date: September 1, 2009.

Class of Air Carriers Not Required to Collect PFC's: Air taxi/commercial operators filing FAA Form 1800–31.

Determination: Approved. Based on information contained in the public agency's application, the FAA has determined that the proposed class accounts for less than 1 percent of the total annual enplanements at El Paso International Airport.

Brief Description of Projects Approved for Collection and Use:

Reconstruct runway 8R/26L.

Modify terminal building security checkpoint.

Administrative costs.

Decision Date: May 16, 2006.

For Further Information Contact: Guillermo Villalobos, Texas Airports Development Office, (817) 222–5657.

Public Agency: Bert Mooney Airport Authority, Butte, Montana.

Application Number: 06–07–C–00–BTM.

Application Type: Impose and use a PFC.

PFC Level: $3.00.

Total PFC Revenue Approved in this Decision: $110,773.

Earliest Charge Effective Date: July 1, 2006.

Estimated Charge Expiration Date: August 1, 2007.

Class of Air Carriers Not Required to Collect PFC's: On demand, non scheduled air taxi/commercial operators.

Determination: Approved. Based on information contained in the public agency's application, the FAA has determined that the proposed class accounts for less than 1 percent of the total annual enplanements at Bert Mooney Airport.

Brief Description of Projects Approved for Collection and Use:

Taxiway D reconstruction and edge lighting system replacement.

Airfield sign replacement.

Supplemental wind cone installation.

Acquire and install weather equipment.

Acquire access control equipment, phase 1.

Master plan study, phase II (special approach feasibility study).

Master plan study, phase III (approach study).

West side security/wildlife fence.

South side pavement construction.

Pavement condition index study.

Decision Date: May 25, 2006.

For Further Information Contact: Dave Stelling, Helena Airports District Office, (406) 449–5271.

AMENDMENT TO PFC APPROVALS

Amendment No., city, state	Amendment approved date	Original approved net PFC revenue	Amended approved net PFC revenue	Original estimated charge exp. date	Amended estimated charge exp. date
01–06–C–03–CVG, Covington, KY	5/04/06	$19,353,000	$19,580,000	10/01/02	11/01/02
02–08–C–02–CVG, Covington, KY	5/04/06	267,326,000	268,062,000	10/01/08	12/01/11
05–08–C–01–COS, Colorado Springs, CO	5/05/06	10,850,868	7,422,980	11/01/07	9/01/05
05–09–C–01–CVG, Covington, KY	5/05/06	47,226,938	45,501,000	10/01/10	9/01/12
01–03–C–01–SLC, Salt Lake City, UT	5/05/06	27,852,072	28,828,703	5/01/02	6/01/02
99–05–C–06–CVG, Covington, KY	5/10/06	18,598,000	18,304,000	2/01/02	2/01/02
03–03–C–01–ERI, Erie, PA	5/12/06	1,001,183	669,555	1/01/05	1/01/05
00–06–C–04–MKE, Milwaukee, WI	5/16/06	123,240,672	130,460,739	11/01/14	2/01/14
02–07–C–03–MKE, Milwaukee, WI	5/16/06	35,205,833	38,807,888	11/01/17	3/01/17
04–10–C–01–MKE, Milwaukee, WI	5/04/06	8,665,601	11,775,601	5/01/18	4/01/18
05–12–C–01–MKE, Milwaukee, WI	5/16/06	202,989	260,614	6/01/18	5/01/18

Issued in Washington, DC, on June 20, 2006.

Joe Hebert,

Manager, Financial Analysis and Passenger Facility Charge Branch.

[FR Doc. 06–5755 Filed 6–27–06; 8:45 am]

BILLING CODE 4910–13–M

DEPARTMENT OF TRANSPORTATION

Federal Aviation Administration

[Docket No. FAA–2006–25190]

Notice of a Change in Direction Finder Availability Throughout United States, Excluding Alaska

AGENCY: Federal Aviation Administration (FAA), DOT.

ACTION: Request for public comment.

SUMMARY: The Federal Aviation Administration (FAA) is requesting public comment on a proposal to decommission all 54 Direction Finders (DF) and the associated DF approaches in all states *other than Alaska.* DF's have been used sparingly over the last nine years and the equipment is beyond its useful lifecycle. Improved radar coverage, pilot education and technologies such as area navigation (RNAV) and global positioning satellite (GPS) have reduced the utilization of DF steers and have essentially made DF's obsolete. A Federal Safety Risk Management Panel (SRMP) has determined that if pilots need orientation assistance, that our existing orientation methods, VOR, ADF, and GPS are reliable and meet the needs of our aviation community. Decommissioning would coincide with the Flight Services service provider's plan to consolidate the 58 flight service stations to 20 facilities.

DATES: Send your comments on or before July 28, 2006.

ADDRESSES: You may send comments [identified by Docket No. FAA–2006–25190] using any of the following methods:

- *DOT Docket Web site:* Go to *http://dms.dot.gov* and follow the instructions for sending your comments electronically.
- *Government-wide rulemaking Web site:* Go to *http://www.regulations.gov* and follow the instructions for sending your comments electronically.

• *Mail:* Docket Management Facility; U.S. Department of Transportation, 400 Seventh Street, SW., Nassif Building, Room PL–401, Washington, DC 20590–0001.

• *Fax:* 1–202–493–2251.

• *Hand Delivery:* Room PL–401 on the plaza level of the Nassif Building, 400 Seventh Street, SW., Washington, DC, between 9 a.m. and 5 p.m., Monday through Friday, except Federal holidays.

Privacy: We will post all comments we receive, without change, to *http://dms.dot.gov*, including any personal information you provide.

Docket: To read comments received, go to *http://dms.dot.gov* at any time or to Room PL–401 on the plaza level of the Nassif Building, 400 Seventh Street, SW., Washington, DC, between 9 a.m. and 5 p.m., Monday through Friday, except Federal holidays.

FOR FURTHER INFORMATION CONTACT: Jeanne Giering, Manager, Flight Services Safety and Operations Support; Mail Drop: 1575 Eye Street, NW., Room 9405; 800 Independence Avenue, SW., Washington, DC 20591; telephone (202) 385–7627; Fax (202) 385–7617; e-mail *Jeanne.Giering@faa.gov.*

SUPPLEMENTARY INFORMATION:

Comments Invited

The FAA invites interested persons to submit written comments or views. The most helpful comments reference a specific portion of the proposal, explain the reason for any recommended change, and include supporting data. We ask that you send us two copies of written comments.

The docket is available for public inspection before and after the comment closing date. If you wish to review the docket in person, go to the address in the **ADDRESSES** section of this preamble between 9 a.m. and 5 p.m., Monday through Friday, except Federal holidays. You may also review the docket using the Internet at the Web address in the **ADDRESSES**.

Privacy Act: Using the search function of our docket Web site, anyone can find and read the comments received into any of our dockets, including the name of the individual sending the comment (or signing the comment on behalf of an association, business, labor union, etc.). You may review DOT's complete Privacy Act Statement in the **Federal Register** published on April 11, 2000 (65 FR 19477–78) or you may visit *http://dms.dot.gov.*

Issued in Washington, DC, on June 21, 2006.

John T. Staples,

Director, Flight Service Program Operations.

[FR Doc. 06–5734 Filed 6–27–06; 8:45 am]

BILLING CODE 4910–13–M

DEPARTMENT OF TRANSPORTATION

Federal Aviation Administration

Proposed Opinion on the Transferability of Interim Operating Authority Under the National Parks Air Tour Management Act

AGENCY: Federal Aviation Administration (FAA), DOT.

ACTION: Notice of proposed opinion.

SUMMARY: This notice sets forth the FAA's proposed decision on the transferability of interim operating authority under the National Parks Air Tour Management Act.

DATES: Send your comments on or before July 28, 2006.

ADDRESSES: You may send comments [identified as ''Comments on the Transferability of IOA''] using any of the following methods:

• Sending your comments electronically to *james.whitlow@faa.gov.*

• Mail: Office of the Chief Counsel; FAA, 800 Independence Ave., SW., Washington, DC 20591.

• Fax: 1–202–267–3227.

FOR FURTHER INFORMATION CONTACT: James Whitlow, Deputy Chief Counsel, Federal Aviation Administration, 800 Independence Avenue, SW., Washington, DC 20591; telephone (202) 267–3773.

SUPPLEMENTARY INFORMATION: This notice sets forth the FAA's proposed opinion on the transferability of interim operating authority.

On April 5, 2000, Congress passed the National Parks Air Tour Management Act (Act). The Act set up a process by which the FAA and the NPS would work together to establish air tour management plans for all units of the national park system and abutting tribal lands having commercial air tours. On October 25, 2002, the FAA published a final rule in 14 CFR part 136, National Parks Air Tour Management (67 FR 65662), pursuant to a mandate specified in the Act. This final rule completed the definition of ''commercial air tour operation'' by establishing the altitude (5,000 feet above ground level) below which an operator flying over a national park for the purpose of sightseeing is classified as a commercial air tour operator. The rule also codified provisions of the Act in the FAA's regulations at 14 CFR part 136,

Under the Act, the air tour management plan (ATMP) process is initiated when a commercial air tour operator files an application for operating authority with the FAA to conduct commercial air tours over a national park or abutting tribal land (49 U.S.C. 40128(a); 14 CFR 136.7). Once an application is filed, the FAA, in cooperation with Director of the National Park Service, must develop and implement an ATMP for the park or abutting tribal land. Operators conducting commercial air tours over a unit of the national park system or abutting tribal land during the 12 month period prior to adoption of the Act are classified under the Act as existing commercial air tour operators (49 U.S.C. 40128(f); 14 CFR 136.3). These existing operators are eligible to receive interim operating authority (IOA), under conditions set forth in the Act. IOA allows these operators to continue conducting commercial air tour over the parks or tribal lands pending completion of the ATMP. With a few limited exceptions, no other operators are permitted to operate pending completion of the ATMP.

The Act and 14 CFR part 136 limit commercial air tour operations conducted under IOA in several ways. First, IOA provides an operator with an annual authorization over a particular park or abutting tribal land for the greater of: (1) The number of flights used by the operator to provide the commercial air tour operations within the 12-month period prior to the date of the Act's enactment; or (2) the average number of flights per 12-month period used by the operator to provide such operations within the 36-month period prior to the Act's enactment. For seasonal operations, the Act calculates IOA based on the number of air tours over national parks or abutting tribal lands during the season or seasons covered by that 12-month period (49 U.S.C. 40128(c)(2)(A); 14 CFR 136.11(b)(1)).

Second, any increase in the authorized number of operations under IOA must be agreed to by the FAA and the NPS. (49 U.S.C. 40128(c)(2)(B); 14 CFR 136.11(b)(2)).

Third, the Act and part 136 also provide that IOA: (1) May be revoked by the Administrator of the FAA for cause; (2) shall terminate 180 days after the date on which an ATMP is established for the park or tribal lands; (3) shall promote protection of national park resources, visitor experiences, and tribal lands; (4) shall promote safe commercial air tour operations; (5) shall promote the

adoption of quiet technology, as appropriate; and (6) shall allow for modifications of the IOA based on experience if the modification improves protection of national park resources and values and of tribal lands (49 U.S.C. 40128(c)(2)(D)–(I); 14 CFR 136.11(b)(4)–(9)).

Since the Act does not directly address the issue of IOA transferability, the FAA must determine whether allowing transferability of IOA from one operator to another is consistent with the Act's provisions and overall goals. As discussed below, the FAA finds that permitting the transferability of IOA is neither consistent with provisions of the Act nor its overall goals.

Congress required ATMPs to be established over units of the national park system and abutting tribal lands to ensure that the agencies analyze the environmental impact of commercial air tours upon such land and ''develop acceptable and effective measures to mitigate or prevent the significant adverse impacts, if any, of commercial air tour operations upon the natural and cultural resources, visitor experiences and tribal lands'' (49 U.S.C. 40128(b)(1)(B); 14 CFR 136.9(a)). Under the Act, commercial air tours are not permitted until an ATMP is completed for the park, unless the operator is an existing air tour operator as defined in the Act and receives IOA, has received authority to operate under a part 91 letter of authority (49 U.S.C. 40128(a)(3); 14 CFR 136.7(g)), or has received authority to operate as a new entrant prior to the completion of the ATMP (49 U.S.C. 40128(c)(3)(C); 14 CFR 136.11(c)).

Congress set up the IOA process as a way of ensuring that those commercial air tour operators conducting commercial air tours over national parks at the time of Act's enactment would not be put out of business while the FAA, in cooperation with NPS, analyzed the environmental impact of the air tours on the national park unit and developed an ATMP. The IOA then ends 180 days after the ATMP is adopted.

IOA is granted to specific operators over specific parks. Those operators who conducted commercial air tour operations in the 12 months preceding enactment (April 5, 2000) over the particular units of the park system for which they are applying for authority qualify for IOA. Those operators receive an allocation equal to the number of operations they conducted in the 12-month period preceding enactment, or an average, based on the three years preceding enactment. Thus, under the terms of the Act, only existing operators initially quality for IOA.

Additionally, a particular operator's IOA may not exceed the number of allocations earned by that operator for a calendar year, unless it was increased pursuant to the Act's provisions, which require concurrence between the FAA and NPS. The FAA and NPS may grant such increases under limited circumstances, and the allocations involved in the increase are not subject to sale.

Given the specificity of the IOA authority and the limitations placed on that authority, FAA has concluded that Congress did not intend for the operators to possess it as a valuable right to be bought and sold. IOA was designed as a temporary solution to allow operators already conducting air tours at the time of the enactment of the Act to continue to operate pending completion of the ATMP. If we allow IOA to be transferred, however, then operators may grow an existing business by adding allocations to their current allotment without FAA and/or NPS approval.

Issued in Washington, DC, on June 22, 2006.

James W. Whitlow,

Deputy Chief Counsel.

[FR Doc. 06–5746 Filed 6–23–06; 3:24 pm]

BILLING CODE 4910–13–M

DEPARTMENT OF TRANSPORTATION

National Highway Traffic Safety Administration

[Docket No. NHTSA–2005–21859; Notice 4]

Toyota Motor North America, Inc., Denial of Appeal of Decision on Inconsequential Noncompliance

Toyota Motor North America, Inc. (Toyota) has appealed a decision by the National Highway Traffic Safety Administration (NHTSA) that denied its petition for a determination that its noncompliance with Federal Motor Vehicle Safety Standard (FMVSS) No. 225, ''Child restraint anchorage systems,'' is inconsequential to motor vehicle safety. Toyota had applied to be exempted from the notification and remedy requirements of 49 U.S.C. Chapter 301, ''Motor Vehicle Safety.'' This notice announces and explains our denial of Toyota's appeal.

Background

NHTSA's notice of receipt of Toyota's original petition was published on July 19, 2005 in the **Federal Register** (70 FR 41476). On September 26, 2005, NHTSA published a notice in the **Federal Register** denying Toyota's petition (70 FR 56207), stating that the petitioner had not met its burden of persuasion that the noncompliance is inconsequential to motor vehicle safety. Toyota appealed, and notice of the agency's receipt of the appeal was published in the **Federal Register** on November 1, 2005 (70 FR 65970). NHTSA received two public comments. One was from Advocates for Highway and Auto Safety and the second was from Toyota, the petitioner.

Affected are a total of approximately 156,555 model year (MY) 2003 to 2005 Toyota Tundra access cab vehicles produced between September 1, 2002 and April 22, 2005, referred to in this notice as ''the subject vehicles.''

A child restraint anchorage system consists of two lower anchorages and a tether anchorage that can be used to attach a child restraint system to a vehicle. These systems are sometimes referred to as LATCH (Lower Anchorages and Tethers for Children) systems and are intended to help ensure proper installation of child restraint systems.

NHTSA's regulations require the installation of a LATCH system in the front passenger seats of vehicles that have an optional on-off switch for the front passenger air bag and that satisfy certain other requirements. Specifically, S4.5.4 of FMVSS No. 208 allows installation of an air bag on-off switch under one of two conditions—the vehicle has no forward-facing rear seating positions or there is not enough room in the rear seat (less than 720 mm) to permit the proper installation of a rear-facing child seat.

Further, S5(c)(2) of FMVSS No. 225 requires that each vehicle that

> (i) Has a rear designated seating position and meets the conditions in S4.5.4.1(b) of Standard No. 208 * * * and, (ii) Has an air bag on-off switch meeting the requirements of S4.5.4 of Standard 208 * * * shall have a child restraint anchorage system for a designated passenger seating position in the front seat, instead of a child restraint anchorage system that is required for the rear seat* * *

The subject vehicles have an air bag on-off switch but do not have the child restraint lower anchorage in the front seat as required by S5(c)(2). As Toyota recognizes, the vehicles are noncompliant.

Toyota contends that this noncompliance is inconsequential to motor vehicle safety and that no corrective action is warranted. In its petition, Toyota stated that rear-facing child restraints could be used in the noncompliant vehicles, and ''is unaware of any rear-facing child restraints that require lower anchorages in the vehicle.'' Toyota further stated,

Most, if not all rear facing child restraints (even those with lower anchorage systems), have belt paths which allow the child restraint to be secured properly in the front passenger seat of the subject vehicles utilizing the front passenger seatbelt. We also note that child restraint manufacturers provide instructions with their child seats (even lower anchorage equipped child seats) on how to install their restraint with the seatbelt. In addition, all Toyota Tundra vehicles provide instructions on how to install child restraints with the seatbelt.

In denying Toyota's original petition, NHTSA pointed out that the absence of required LATCH anchorages compromises the overall level of child passenger safety. FMVSS No. 225 requires a simple, uniform system for installing child restraints that increases the likelihood of proper installation. Information available to NHTSA when it was developing FMVSS No. 225 indicated that child restraints were being improperly installed with great frequency, increasing the safety risk to children riding in the improperly installed child restraints. The purpose of FMVSS No. 225 was to increase the likelihood of proper installation of child restraint systems by requiring easy-to-use anchorage systems. This was explained in **Federal Register** notices on FMVSS No. 225. Therefore, NHTSA denied Toyota's petition, as vehicles lacking required LATCH anchorages do not offer the same level of safety as compliant vehicles because of the increased risk of improper child restraint installation.

Toyota's original petition further pointed out that model year 2000 to 2002 Tundra access cab vehicles produced prior to the effective date of the FMVSS No. 225 lower anchorage requirement have a front passenger airbag on-off switch as standard equipment but no lower anchorage system in the front seat. In light of this fact, Toyota asserted that,

considering child restraint installation in the front passenger seat, the 2003–2005 MY vehicles (subject vehicles) are no different than the 2000–02 MY vehicles and further, it follows that the subject vehicles are no less safe than the 2000–02 MY vehicles.

In response, NHTSA explained that the promulgation of FMVSS No. 225 was justified by the additional safety it would provide, i.e., that fewer child deaths and injuries are expected to result from widespread use of the LATCH system and it will result in far fewer children being exposed to the risk of injury while riding in an improperly installed child restraint. Whether a noncompliant vehicle that lacks a required safety device offers safety comparable to that provided by a vehicle manufactured prior to the effective date of the requirement to install that device is irrelevant to the consequentiality of noncompliance with the new requirement. Rather, the relevant inquiry focuses on the differences in safety between a vehicle that does comply with the new requirement and the vehicles that are the subject of a petition for a decision that the noncompliance is inconsequential to motor vehicle safety under 49 U.S.C. 30118 and 30120. Here, NHTSA concluded that the subject vehicles offer a lower level of child passenger safety than those meeting the requirements of FMVSS No. 225.

Toyota further stated in its petition that it considered

whether a lower anchorage child restraint can be mistakenly installed in the front passenger seat attempting to utilize the lower anchorage. Upon investigating the seat bight of the subject vehicles, we believe a current vehicle owner or subsequent owner could easily observe that no lower anchorage bars exist. We would also note that there are no portions of the seat frame within the seat bight of the front passenger seat that may be mistaken for lower anchorage bars.

NHTSA rejected this argument, explaining that whether vehicle owners may or may not mistakenly attempt to use the nonexistent LATCH system fails to address the issue that the noncompliance denies owners and parents the safer and legally required LATCH alternative. Additionally, NHTSA pointed out that its child passenger safety working group presented many examples of misuse. Parents with vehicles manufactured before the September 1, 2002 compliance date for the LATCH requirement who mistakenly believed their vehicles had a LATCH system have used seatbelt latch plates, drilled holes through the nylon webbing of the seatbelt or seatbelt buckle stalk, and attached seats to the seat support structure or other places within the vehicle that can be hooked to, all in attempts to secure the child restraint using the LATCH system that was not present.

Finally, Toyota noted in its original petition that it has not received customer complaints regarding the absence of a front passenger seat child restraint lower anchorage system, nor has it received any reports of a crash, injury or fatality due to this noncompliance. NHTSA responded that it does not consider the absence of these reports to be compelling evidence of the inconsequentiality of this noncompliance to safety.

In consideration of the foregoing, NHTSA decided that Toyota did not meet its burden of persuasion that the noncompliance it described is inconsequential to motor vehicle safety. Accordingly, NHTSA denied the petition.

In its appeal from NHTSA's denial, Toyota states that ''it appears there has been some miscommunication regarding the subject vehicles and presence of lower anchorage systems (LATCH).'' Toyota proceeds to state that the noncompliant vehicles have two LATCH positions in the rear seats, and it is only in the front passenger seat that there is no LATCH system. Toyota further states, ''the difference between the subject vehicles and competitive models with two LATCH positions in the rear seats and no LATCH in the front passenger seat is that the subject vehicles have [an] airbag cut-off switch allowed under FMVSS 208 S4.5.4, while the competitor models do not have this switch.'' [1]

Toyota reiterates that it has not received any customer complaints, and concludes that ''the vehicles comply with the intent of the standard and the vehicles are no less safe than vehicles which comply with the requirements of FMVSS 225 without a cut-off switch.'' The company states that, rather than remedying the noncompliance by installing LATCH anchorages in the front seat of the subject vehicles, ''the likely remedy is to remove the air bag cut-off switches.'' Toyota adds that it has not received complaints regarding the on-off switches and that the company believes that owners of the subject vehicles consider the switches a useful feature.

In response to Toyota's appeal, Advocates for Highway and Auto Safety (Advocates) commented. Advocates states that, apart from what it submitted with its original petition, Toyota has provided no new evidence demonstrating the inconsequential nature of its noncompliance. The group also offers its views on the legality and safety consequences of removing the air bag on-off switch.

Toyota supplemented its appeal by filing a letter reiterating its statement from its appeal that the noncompliant vehicles have two LATCH positions in the rear seats, leaving only the front passenger seat with no LATCH system. The company also explains in the letter

[1] So far as NHTSA is aware, the noncompliance of the subject vehicles is unique in that no other vehicle has an on-off switch but no LATCH. The competitor models that have rear seating areas of the dimensions necessary to make an on-off switch permissible are in compliance with the rules relevant here either because they have no switch and no LATCH anchorages in the front seat or they have both the switch and the required anchorages.

its views on the legality of removing the on-off switch.

NHTSA notes that the possible remedy a manufacturer may choose to address a particular noncompliance is not a determining factor in NHTSA's decision on whether that noncompliance is inconsequential to safety. Accordingly, this decision does not address the remedy that Toyota may choose to address this noncompliance. To do so here would be premature.

Decision

After carefully considering the arguments presented in this matter, NHTSA has decided to deny the appeal. Toyota has presented no new data or information that would cause NHTSA to change its initial decision, and it has not made a persuasive case that the initial denial was incorrect.

NHTSA is fully aware (as it was at the time of the initial denial) that the noncompliant vehicles have two LATCH positions in the rear seats. However, that fact does not render the absence of the anchorages in the front seat inconsequential. Regardless of the availability of the LATCH positions in the rear seats, the noncompliance creates a greater risk of improper child restraint installation than would be present if the required anchorages had been installed in the front seat. The fact that anchorages exist in the rear seats does not lessen the risk that one who chooses to install a child restraint, whether rear-facing or forward-facing, in the front seat will do so improperly and may have no bearing on a person's decision to use the front seat for that purpose.

Moreover, the rear seating area dimensions of the subject vehicles dictate that the front seat is the only place available for installation of a rear-facing child restraint system. NHTSA's regulations permit an air bag on-off switch in these vehicles because the rear seat dimensions cannot accommodate a rear-facing child seat. Accordingly, the rear LATCH positions are irrelevant to the use of rear-facing child restraints since these restraints cannot be installed in the rear seating positions of the subject vehicles. Owners of the subject vehicles wishing to use rear-facing restraints are restricted to the front seat for that purpose. However, given the lack of anchorages in the front seat, the persons installing child restraints and the children occupying those rear-facing restraints are denied the safety advantages that the anchorages would provide in helping to ensure proper installation of the child restraints. FMVSS No. 225 requires that the additional protection afforded by anchorages be provided wherever air bag on-off switches are installed, and the absence of those anchorages is consequential to the safety of the small children whose safety depends on proper installation of the child restraint systems in the vehicles in which they ride.

In consideration of the foregoing, NHTSA has decided that the petitioner has not met its burden of persuasion, either in its initial petition or in its appeal of the denial of that petition, in establishing that the noncompliance described is inconsequential to motor vehicle safety. Accordingly, Toyota's appeal of NHTSA's decision on the inconsequential noncompliance petition is hereby denied. This decision constitutes final agency action, and the petitioner has no right to further administrative review of NHTSA's denial.

(Authority: 49 U.S.C. 30118, 30120; delegations of authority at CFR 1.50 and 501.8).

Issued on: June 22, 2006.

Nicole R. Nason,

Administrator.

[FR Doc. E6–10179 Filed 6–27–06; 8:45 am]

BILLING CODE 4910–59–P

DEPARTMENT OF TRANSPORTATION

National Highway Traffic Safety Administration

[NHTSA–2006–24872]

Proposed Guidelines for Impaired Driving Records Information Systems Section 2007(c) Implementing Guidelines

AGENCY: National Highway Traffic Safety Administration (NHTSA), Department of Transportation (DOT).

ACTION: Notice of proposed guidelines on impaired driving records information systems.

SUMMARY: This notice sets forth proposed guidelines on the types and formats of data that States should collect relating to drivers who are arrested or convicted for violation of laws prohibiting the impaired operation of motor vehicles, as directed by Section 2007(c) of the Safe, Accountable, Flexible, Efficient Transportation Equity Act: A Legacy for Users (SAFETEA–LU).

DATES: Written comments may be submitted to this agency and must be received by July 28, 2006.

ADDRESSES: Comments should refer to Proposed Guidelines on Impaired Driving Records Information Systems and be submitted to Docket No. NHTSA–2006–24872.

FOR FURTHER INFORMATION CONTACT: For programmatic issues: Ms. De Carlo Ciccel, Highway Safety Specialist, Impaired Driving Division, NTI–111, or Ms. Heidi Coleman, Chief, Impaired Driving Division, NTI–111, National Highway Traffic Safety Administration, 400 Seventh Street, SW., Washington, DC 20590. Telephone: (202) 366–1694. For legal issues: Ms. Nygina T. Mills, Office of Chief Counsel, NCC–113, National Highway Traffic Safety Administration, 400 Seventh Street, SW., Washington, DC 20590. Telephone (202) 366–1834.

SUPPLEMENTARY INFORMATION:

Background

Annually, more than a million drivers are arrested for alcohol-impaired driving. While States bear the primary responsibility for enacting and enforcing impaired driving laws and for adjudicating and sanctioning offenses, they sometimes lack the most effective tools to manage their programs. A comprehensive data system containing records of impaired driving arrests and convictions would enable a State to make more effective traffic safety decisions. The ideal system should contain timely, accurate, complete, consistent, integrated, accessible and secure information. The less timely citation data are, the less their utility. Citation data that are not accurate or complete (e.g., misspelled name, incorrect charge) can result in dismissed cases or reduced charges and can complicate linkage to other traffic records system components such as driver license files. Citation data that are not consistent can lead to charges that vary by jurisdiction or by law enforcement agency. Data that are not accessible or that cannot be integrated or linked almost always require more time, effort and resources to process and complete, and can delay or interfere with the adjudication process. Data that are not secure can lead to system-wide failures and data corruption.

NHTSA's experience indicates that a successful *Impaired Driving Records Information System* requires significant efforts by a State to generate, transmit, store, update, link, manage, analyze, and report information on impaired driving offenders and citations. Such a system should include impaired driving-related information that is collected and managed by the system's stakeholders. Key system stakeholders include law enforcement agencies, the Department of Motor Vehicles (DMV), and the judicial system. A fully

developed electronic Impaired Driving Records Information System is a powerful tool to assist States in developing an effective system of deterrence for impaired driving.

In the agency's latest reauthorization, Congress recognized the need for States to employ more robust impaired driving data systems. Section 2007(c) of the Safe, Accountable, Flexible, Efficient Transportation Equity Act: A Legacy for Users (SAFETEA–LU), directs NHTSA to ''issue guidelines to the States specifying the types and formats of data that States should collect relating to drivers who are arrested or convicted for violation of laws prohibiting the impaired operation of motor vehicles.'' In response to that direction, today's notice sets forth guidelines in the form of a model system for impaired driving records, based on the results of NHTSA experience in this area. NHTSA's efforts to date suggest that important statistical and data elements include data covering arrests, case prosecutions, court dispositions and sanctions, and that it is critical to provide for the linkage of such data and traffic records systems to appropriate jurisdictions and offices within the State.

NHTSA's Experience: Impaired Driving Data Systems

In 1997, NHTSA published ''Driving While Intoxicated Tracking Systems'' (DOT HS 808 520). This report laid the foundation for building a comprehensive tracking system for driving while intoxicated (DWI) offenses. An effective DWI Tracking System was defined as one that: (1) Effectively manages DWI information from arrest through sanction completion and/or license reinstatement; (2) adequately gauges DWI trends and the effectiveness of a wide range of education, information, legislation, and other countermeasures and targeted reduction programs; (3) provides key decision makers (law enforcement, DMV, prosecutors, judges, etc.) with adequate and timely information to allow equitable imposition of charges and penalties; and (4) reduces the administrative burden on system stakeholders and improves efficiency while increasing the punitive nature of State laws and processes. Specific DWI Tracking System types in use effectively by States include case management systems, statistical systems and hybrid systems.

The 1997 report recognized the importance of various key stakeholders to the success of the system. The judicial system was assumed to encompass the various parties involved in the prosecution and adjudication of impaired driving cases, including judges, prosecutors, public defenders, and, in some States, probation officials. Other identified key stakeholders included treatment agencies, departments of correction, departments of criminal justice, legislatures, advocacy groups, and the State Highway Safety Offices.

Since each State is unique in its governmental structure and strategies, the report concluded that a single DWI tracking system design that would meet the needs of all States could not be developed. However, the report provided a framework for an effective core system, described the key system characteristics, discussed the criticality of DWI tracking, and laid the foundation for developing an effective DWI Tracking System.

Since 1997, most States have worked to develop specific components of a DWI Tracking System, often with very little exchange or interaction between system components. Consequently, most States still lack a comprehensive system to identify, adjudicate, prosecute, and track incidences involving alcohol-impaired and/or other drug-impaired drivers.

In 2001, in collaboration with State and federal agencies, NHTSA expanded the framework of a DWI Tracking System to a more comprehensive impaired driving records information system. This expanded system, known as the *Model Impaired Driving Records Information System*, enabled a State to perform the following functions:

- Appropriately charge and sentence offenders, based on their driving history;
- Manage impaired driving cases from arrest through the completion of court and administrative sanctions;
- Identify populations and trends, evaluate countermeasures and identify problematic components of the overall impaired driving control system;
- Provide stakeholders with adequate and timely information to fulfill their responsibilities; and
- Reduce administrative costs for system stakeholders and increase system efficiencies.

In 2002, NHTSA solicited participation in a *Model Impaired Driving Records Information System* that provided immediate electronic access to driver history and vehicle information, electronic collection of data, electronic transmission of data between key stakeholders, and on-line access to complete, accurate, and timely information on impaired driving cases. 67 FR 40381 (June 12, 2002). With this system, States could begin to use the model requirements and data elements as a collective resource and thereby curb the installation of costly and duplicative record systems. The system ideally provides full access to all key stakeholders and addresses each stakeholder's needs. The system also tracks each impaired driving offense and offender administratively and through the judicial system, from arrest through dismissal or sentence completion, and provides aggregate data (e.g., number of arrests, convictions, blood alcohol concentration (BAC) distribution, and offender demographics) to better manage a State's impaired driving program.

States participating in this ongoing demonstration project include Alabama, Connecticut (added in 2004), Iowa, Nebraska, and Wisconsin. These States have implemented the use of real-time data to plan and better manage their impaired driving programs. NHTSA plans to make the results of these States' experiences available in 2007 to assist other States to improve impaired driving records information systems. These States' success stories prove that using real-time data systems can not only be successfully accomplished, but that various obstacles to implementation can be overcome.

Based on the agency's experience and efforts described above, NHTSA has developed a framework for an effective data system containing records of impaired driving arrests and convictions. In response to the requirement in SAFETEA–LU to issue guidelines to assist the States in the types and formats of data to collect concerning impaired driving arrests and convictions, the agency proposes the following model system.

Comments

Interested persons are invited to comment on these proposed guidelines. It is requested, but not required, that two copies be submitted. You may submit your comments by one of the following methods:

(1) By mail to: Docket Management Facility, Docket No. NHTSA–2006–24872, DOT, 400 Seventh Street, SW., Nassif Building, Room PL–401, Washington, DC 20590;

(2) By hand delivery to: Room PL–401 on the Plaza level of the Nassif Building, 400 Seventh Street, SW., Washington, DC, between 9 a.m. and 5 p.m., Monday through Friday;

(3) By fax to the Docket Management Facility at (202) 493–2251; or

(4) By electronic submission: Log onto the DMS Web site at *http://dms.dot.gov* and click on ''Help'' to obtain instructions.

All comments received before the close of business on the comment closing date will be considered. However, the action may proceed at any time after that date. The agency will continue to file relevant material in the docket as it becomes available after the closing date, and it is recommended that interested persons continue to examine the docket for new material.

You may review submitted comments in person at the Docket Management Facility located at Room PL–401 on the plaza level of the Nassif Building, 400 Seventh Street, SW., Washington, DC, between 9 a.m. and 5 p.m., Monday through Friday. You may also review submitted comments on the Internet by taking the following steps:

(1) Go to the DMS Web page at *http://dms.dot.gov*.

(2) On that page, click on ''Simple Search.''

(3) On the next page (*http://dms.dot.gov/search/searchFormSimple.cfm*) type in the digit docket number shown at the beginning of this document. Example: If the docket number were ''NHTSA–2001–12345,'' you would type ''12345.'' After typing the docket number, click on ''search.''

(4) On the next page, which contains docket summary information for the docket you selected, click on the desired comments. You may also download the comments. Although the comments are imaged documents, instead of word processing documents, the ''pdf'' versions of the document are word searchable.

Those persons who wish to be notified upon receipt of their comments in the docket should enclose, in the envelope with their comments, a self-addressed stamped postcard. Upon receiving the comments, the docket supervisor will return the postcard by mail.

Model Impaired Driving Records Information System

Introduction

The *Model Impaired Driving Records Information System* supports several important functions. It should:

- Track each impaired driving offender from arrest through dismissal or sentence completion;
- Provide aggregate impaired driving data;
- Conform to national standards and system performance standards;
- Provide accurate, complete, timely, and reliable data; and
- Contain quality control and security features that prevent core and essential data elements and/or driving records from becoming corrupted or compromised.

States vary widely in their organizational structure. States vary, for example, in the structure of their court systems and their executive functions related to public safety, driver licensing, public health, substance abuse, and criminal justice. Also, there are substantial differences in State laws concerning impaired driving, access to public records, acceptance of electronic signatures on charging documents, and many other areas. Therefore, some States may need to make adjustments to the model for conformance with their particular structures and systems.

Specific Features

The *Model Impaired Driving Records Information System* should have the following specific features:

- Statewide coverage (DMV, all courts adjudicating impaired driving cases, all law enforcement agencies);
- Electronic access by law enforcement officers and courts to current information on license history and status; vehicle registration status, applicable criminal history, and outstanding warrants;
- An electronic citation system that is used by officers at the roadside and/or at the police station and that supports the use of bar codes, magnetic striping, or other technologies to automatically capture driver license and registration information on the citation and other standard legal forms, such as an implied consent form;
- A citation tracking system that accepts electronic citation data (and other standard legal forms) from law enforcement agencies, provides real-time tracking and accountability from the distribution of citation forms to issuance by police officers, through the final court adjudication, and the imposition and completion of court and administrative sanctions, provides access by offender and by citation number or other unique identifier, and allows on-line access by stakeholders;
- Electronic transmission of data from law enforcement agencies and the courts to the driver license system to permit immediate and automatic imposition of administrative sanctions, if applicable, and recording of convictions on the driver license;
- Electronic reporting to courts and DMVs by probation, treatment, or correctional agencies, as applicable, with regard to compliance or non-compliance with court or administrative sanctions;
- Linkage of information from the incident/case-based tracking system and the offender-based DMV license, treatment, and probation systems to develop a complete record for each offender, including driver history;
- Timely access by all stakeholders, including the State Highway Safety Office, to periodic statistical reports needed to support agency operations and to manage the impaired driving control system, identify trends, and support problem identification, policy development, and evaluation of countermeasures;
- Flexibility to include additional data and technological innovations; and
- Conformity with national standards developed by, for example, the American Association of Motor Vehicle Administrators (AAMVA) and the National Crime Information Center (NCIC).

Core Data Definitions

The core set of data available in the *Model Impaired Driving Records Information System* includes data generated as a result of an impaired driving arrest and the movement of the case through the system as well as data obtained from existing databases or created by linking existing data elements. Specific data elements should conform to national standards developed by AAMVA and others. Subject to State and federal laws and policies regarding access to data and privacy restrictions, the core data available to (but not necessarily accessed by) the courts, DMV, and law enforcement agencies are listed below.

The following data should be obtained from existing databases:

- Driver identifying information, including name, address, driver license number and State, date of birth, physical characteristics (race, gender, height, eye color, weight);
- Driver license class and endorsements, status (e.g., suspended, hardship license, cancelled), restrictions;
- Vehicle license plate number and State of registration, status (e.g., registered, impounded, stolen), Vehicle Identification Number (VIN), DOT motor carrier identification number for commercial vehicles;
- Relevant criminal history;
- Outstanding warrants and other administrative actions;
- In accordance with the State's policies for posting and retaining information on the driver record, offender's history of prior non-impaired driving traffic convictions and associated penalties, impaired driving convictions and/or pre-conviction administrative actions and associated penalties, crashes, current accumulated license penalty points, administrative license actions; and

- Outstanding citations or arrests.

The following data should be generated at the time of the impaired driving arrest and at subsequent points throughout the adjudication and sanctioning stages:

- Arrest/citation information:
  - Citation number(s);
  - Date;
  - Time of day;
  - Roadway location and jurisdiction;
  - Arresting office, Law Enforcement Agency (LEA) identifier;
  - Violation(s) charged;
  - Crash involvement, severity, number of passengers;
  - Alcohol test result: Refusal, Blood Alcohol Concentration (BAC), missing;
  - Drug test result: Refusal, drugs detected, missing;
  - Results of Standardized Field Sobriety Tests and other field tests, as applicable.
- Pre-conviction administrative license and vehicle penalties imposed:
  - Type of sanction;
  - Date imposed;
  - Length of sanction.
- Prosecution/adjudication data:
  - Court case identifier;
  - Date of arraignment;
  - Identifiers for court, judge, jurisdiction;
  - Date of disposition;
  - Completion or non-completion of pre-conviction or pre-sentence deferral program (e.g., court defers sentencing or conviction pending offender's completion of alcohol treatment program and/or other conditions);
  - Final court disposition (e.g., dismissed, acquitted, plea to reduced charge (specified), convicted of original charge after trial, diversion program, adjournment in contemplation of dismissal, pending);
  - Court penalties imposed, including length of jail sentence, house arrest, electronic home monitoring, plate impoundment, ignition interlock device; dollar amount of fines and fees; length and terms of probation; substance abuse assessment/treatment sentence; hours of community service; amount of restitution to victims; vehicle forfeiture; length of license revocation or suspension; other;
  - Probation report and/or pre-sentence assessment information, if available by law.
- Subsequent violations, including driving while suspended/revoked, during license suspension period and resulting penalties;
- Completion of treatment/assessment (start and finish dates);
- Completion/non-completion of court and/or administrative sanctions, including amounts of fines and fees collected; terms of jail time, license suspension or revocation, vehicle or plate impoundment/forfeiture, community service, ignition interlock; other;
- Penalties for failure to complete court and/or administrative sanctions or violations of probation, including license suspensions/revocations;
- Whether license was reinstated and if so, date of reinstatement.

Data Entry, Storage, and Transmission

Although treatment agencies and other stakeholders provide important data to the system, the timely collection and transmission of data by the courts, Law Enforcement Agencies (LEAs), and Departments of Motor Vehicles (DMVs) are of primary importance. Each of these agencies should generate and transmit data electronically. In States where data on alcohol and drug tests are collected and managed by a fourth agency, it is imperative that these data also are generated and transmitted electronically. Other types of data obtained from other agencies, such as treatment agencies, also should be transmitted electronically.

The software for generating court records and citations should have extensive edits and menu pull-downs to minimize data entry errors. When used correctly, the software should ensure that data entry is virtually error-free. The electronic citation software should provide for the automatic population of the citation form and any other related arrest forms with information from the driver license and vehicle registration. This may be accomplished through several mechanisms, including the use of bar codes or magnetic striping or by accessing the driver license file online from a mobile computer in the patrol vehicle or station. The court and DMV systems should have built-in audits that periodically check a sample of records for the timeliness of the receipt of the data and the accuracy and completeness of the records. Ideally, each component of the system should provide real-time, on-line access to stakeholders and real-time, immediate transmission of data. Electronic capture, retrieval, and data transmission provides for timeliness and consistency in data. Also, electronic system edits ensure more accurate and reliable data.

Law enforcement officers and courts should have immediate (or near-equivalent) access to current driver license and registration records and criminal history records. The immediate access to driver license and registration information may be accomplished in various ways, including the use of palm pilots or on-line access to the driver license file through a mobile computer in the vehicle or at the station. If allowed by State law and policy, officers and courts should be able to correct or update a limited number of specified fields in the driver record. For example, a driver's address may be incorrect on the driver license record because the driver changed residence but failed to notify DMV.

Specific Major Stakeholder Data Requirements

While various stakeholders are important to the success of the Model system, NHTSA's experience has shown that key system stakeholders include LEAs, DMVs and the courts.

Law Enforcement Agencies. The electronic issuance of citations and other standardized forms (e.g., alcohol or drug test form) should occur at the point of arrest, either at the roadside or at the station, depending on local and State laws and policies. Immediately, or no later than 48 hours after the issuance of the citation, the citation record should be transmitted electronically to the courts and the DMV (if the State imposes pre-conviction administrative license or vehicle sanctions) and integrated into the court and DMV computer systems. The electronic transmission of data can occur in several ways, for example, by wireless transfer via low-energy waves of cellular/digital networks, by downloading the data to a disk and transmitting via the Internet from a desktop computer connected to a landline, or online from a mobile computer in the vehicle. The data may go directly to the courts or be routed through data centers located throughout a State.

The results of drug tests and alcohol tests, when based on a blood sample, will not be available at the time of the arrest and must be provided at a later date. An interface with unique identifiers allows for seamless electronic transfer of test results to the appropriate offender, which ultimately improves system efficiencies and significantly reduces errors.

Courts. Many, if not most, courts use case management software to track cases and support administrative functions (*e.g.*, scheduling court appearances and assigning cases). Traffic Court Case Management Systems Functional Requirement Standards are obtainable from the National Center for State Courts Technology Services at *http://www.ncsconline.org/D_Tech/standards/*. Electronic citation information transmitted by Law Enforcement Agencies (LEAs) may interface directly with a court database

or be sent via an interim data warehouse or gateway to which data are sent and then retrieved by courts and other authorized parties (e.g., prosecutors, defense attorneys). After any necessary translation of the record layout, the electronic citation becomes part of the court's electronic case record and the court's case management system LEAs, the DMV, prosecutors, and other key stakeholders should have online access to query the court system about the status of a particular case or a set of cases (e.g., citations issued by an LEA in the past month). In States where only one violation is placed on a citation form, the system should allow for accessing all citations issued to an offender in a particular incident.

The information needed by the DMV (e.g., notice of conviction or completion of arraignment, prompting administrative license or vehicle sanctions) should be transmitted electronically by the courts immediately, or no later than 48 hours after the action (e.g., conviction or arraignment). This transmission may occur through a variety of mechanisms, for example, via the Internet with the DMV accessing a mailbox on a court Web site and downloading relevant files or via the Internet directly from the court to the DMV. Programming by the courts or the DMVs may be needed to translate court records into a form that can be integrated with DMV records.

DMV. Driver license and vehicle records that are easily understood should be available electronically to the courts, LEAs, and other authorized stakeholders. The driver license and vehicle registration systems should be adapted as necessary to receive information electronically from the courts and LEAs, if applicable. Data received from the courts or LEAs should be integrated into the DMV data bases immediately, or no later than 24 hours after receipt of data. The licensing and vehicle registration computer systems should be programmed so that administrative and court-ordered sanctions are triggered automatically when the information is received from the courts or LEAs.

Information needed by treatment agencies, probation offices, and other agencies involved in sanctioning offenders should be provided electronically by the DMV to the extent practicable. In turn, these agencies should report electronically to the DMV about the completion of sanction. The DMV also should develop protocols with the courts to ensure that information related to the failure to complete sanctions and corrections to court records identified by the DMV are transmitted back to the courts.

Statistical Report Capabilities

A *Model Impaired Driving Records Information System* enables organizational stakeholders, including the State Highway Safety Office, the State legislature, NHTSA, and others, to obtain periodic and special statistical reports on impaired driving activities within the State. Standardized statistical reports should be periodically generated, and the stakeholders and other authorized system users should be able to obtain simple sets of statistical data on an *ad hoc* basis through a user-friendly protocol, to the extent that State laws permit. In States where some of the relevant records are sealed to protect personal privacy, the system should permit such records to be included in aggregate summaries.

States vary widely in their definitions of first and repeat impaired driving offenses, both in terms of the look-back period of years and in terms of the offenses that qualify as a prior offense. In some States, for example, a refusal to submit to the alcohol test would count as a prior offense. In generating statistics related to first and repeat offenses, data should be generated using the State's definition of a repeat offense.

Current and historical aggregated data should be available, and the data should be available on a statewide basis, by jurisdiction, or for specific courts or LEAs, as applicable. Aggregate numbers and rates (e.g., alcohol test refusals per person arrested), as applicable, should be provided for the following first and subsequent offenses, to the extent that State laws permit:

- Impaired driving arrest events (including multiple-charge events) by charge;
- All types of final court dispositions, for example, conviction on original charge, conviction on reduced charge (specified), acquittal, dismissal, adjournment in contemplation of dismissal, pending, failure to appear in court;
- Trials by charge and disposition;
- Location of arrests, e.g., roadway segment, jurisdiction;
- Alcohol test refusals and BAC results for tests administered;
- Drug test refusals and results for tests administered;
- Age and gender of persons arrested and convicted;
- All types of court penalties imposed;
- All types of administrative penalties imposed by the DMV, for example, pre-conviction driver license suspension, pre-conviction license plate impoundment;
- Sentence or adjudication diversions/deferrals, if applicable;
- Referrals to treatment by first and repeat offender;
- Completion/non-completion of treatment;
- License reinstatements;
- Sentence completions/non-completions, for example, paid and unpaid fines, jail time served/not served, and community service completed/not completed;
- Average time from arrest to first court appearance, to conviction, and to sentencing statewide by charge;
- Outstanding warrants issued and other administrative actions; and
- Subsequent violations, including driving while suspended/revoked, and resulting penalties during license suspension period.

The generation of much of these data draws from and links information stored in various stakeholders' systems. Depending on a State's laws for charging violations, deriving a particular measure (e.g. second offenders) may necessitate linking data from a case-based records system (e.g., court system) with data from a driver-based records system (e.g., DMV system). The priority for each of the three key stakeholders (LEAs, courts, DMV) is necessarily developing a data system to support its operations and responsibilities. Thus, it is unlikely that any of these stakeholders currently has or will develop a computer system with the capability to generate these kinds of linked data, unless this is a statutory responsibility of the organization.

Data Warehouse

What will typically be required is a data warehouse, or its equivalent, with a database drawing from the various stakeholder data systems, with the capability to link these data and generate standardized periodic statistical reports, and with user-friendly access to stakeholders. A single agency should have the responsibility for developing and maintaining this data warehouse, based on the mutual agreement of the key stakeholders. It may be one of the key stakeholders—most likely the DMV—or it may be another organization, such as the highway safety office, a university, a legislative research division, or a criminal justice organization. Each stakeholder should have a secure means of access to the information, for example, through a secure ''mailbox.'' The centralized data repository may be a single database, procedures for assimilating data, or a networked

distributed database with access gateways.

The data warehouse does not replace the need for each stakeholder to maintain its own data records system. Nor does it eliminate the need for each stakeholder's system to be accessible on-line for basic queries by other stakeholders, since only selected data would be extracted from each stakeholder's system. In addition, for the data warehouse function to operate most effectively, it should be viewed as serving an end in itself (that is, the generation of statistical information cutting across agencies and across the different stages of the impaired driving process), rather than as an adjunct to a stakeholder system designed for a different, albeit related, purpose.

Guidelines for Implementation

States should assess their own circumstances as they conform their DWI tracking systems to the Model System. These circumstances include the complexity of the State's impaired driving law, the amount and types of resources needed to purchase hardware and software and to obtain programming support, the telecommunications infrastructure in the State to support roadside access to DMV driver records and to move data electronically among stakeholders, the computer network for the transmission of data among stakeholders, the degree of uniformity with regard to procedures and policies within organizations and jurisdictions, and intra-organizational and inter-organizational issues such as territorial concerns, poorly defined roles and responsibilities, and lack of agreement on priorities, problems, or solutions within the State.

States may need to address particular obstacles or accommodate certain critical factors in conforming to the model system. For example, depending on geography and size, the impaired driving stakeholders may not have the ability or the resources to upgrade an inadequate telecommunications infrastructure. The selected system must be capable of functioning within this environment. In addition to problematic telecommunications infrastructure, a State's ability to implement improvements to existing system components is hampered by complicated impaired driving laws (e.g., tiered BAC systems, different levels of offenses adjudicated by different courts, complex mixes of administrative and court sanctions), a non-unified court system, the lack of a uniform traffic citation, paper-based and antiquated mainframe systems within the stakeholder agencies, and budget constraints.

In order to attempt full conformity with the Model System, States should undertake the following steps:

- Under the auspices of the State's Traffic Records Coordinating Committee, form a subcommittee or task force charged with overseeing the development and implementation of the system, including the courts (judges, prosecutors, and probation, if applicable), the DMV, the State police and local LEA representatives, treatment, the highway safety office, and other important stakeholders;
- Designate a single lead agency for developing and implementing the system;
- Establish a mechanism for working with the State's information and technology offices to plan and implement the system, including writing software and hardware specifications, selecting vendors, etc.;
- Develop a shared understanding of stakeholders' roles and responsibilities;
- Develop a detailed impaired driving critical path. This critical path describes the step-by-step procedures related to an impaired driving offense, beginning with the citation, continuing through adjudication (administrative and judicial), and ending when the disposition is posted to the driver file (see diagram below).
- Conduct a detailed assessment of current systems to collect, manage, and analyze impaired driving data, in comparison with the model system. (An appropriate assessment of the current systems in comparison with the model system should inventory the current stock of hardware and software to identify the needs of courts, LEAs, the DMV, and other key stakeholders, relate the current systems to the detailed impaired driving critical path, identify deficiencies and steps needed to conform to the specific features noted in the *''Specific Features of the Model System''* section of these guidelines, examine the compatibility of existing record formats, processes, hardware, software, etc., and evaluate the State's compliance with national standards, for example, standards for electronically-readable driver licenses);
- Standardize processes, procedures, forms, terminology, and data elements among stakeholders and jurisdictions;
- Develop a detailed, step-by-step, long-range plan (including funding levels) for implementing and maintaining the resulting system, training personnel in affected agencies, system upgrades, and obtaining buy-in from the primary stakeholders;
- Develop a formal interagency cooperative agreement to implement the plan, detailing the responsibilities of the agencies and potential sources of short-term and long-term funding;
- Identify statutory, regulatory, or procedural changes needed to implement the system; consider simplification of regulations or laws;
- Establish protocols for authorizing system users and procedures to protect personal privacy rights and the security of the system;
- Identify sources of funding; consider the use of dedicated fees or fines;
- Consider working with other States to take advantage of economies of scale and to minimize duplicative efforts; and
- Formulate a plan to ''sell'' the importance of the system to the public, advocacy groups, and State policymakers and enlist their support for implementation of improved impaired driving records information system components and related systems.

Example of an Impaired Driving Critical Path[1]

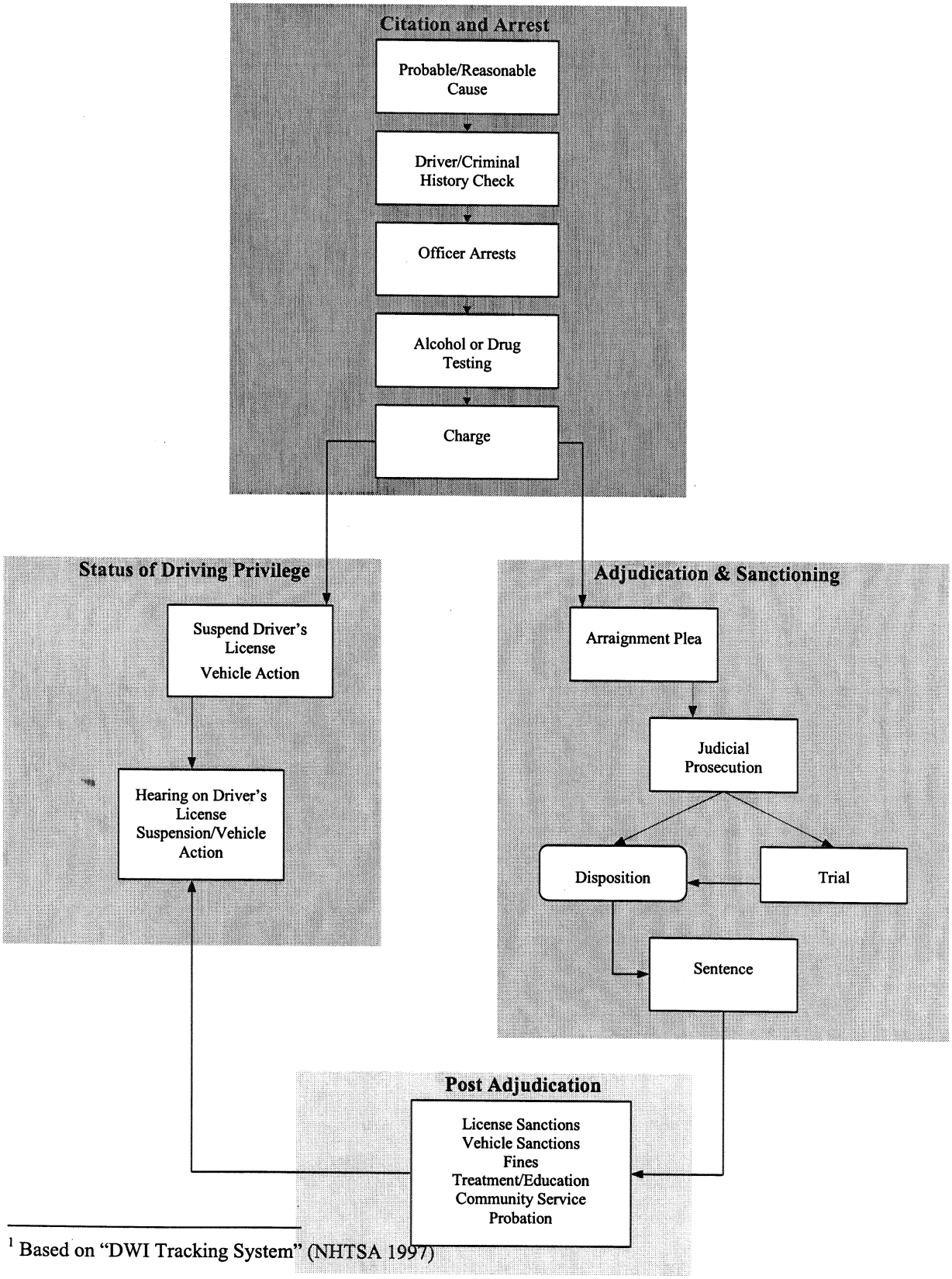

[1] Based on "DWI Tracking System" (NHTSA 1997)

Issued on: June 23, 2006.

Brian McLaughlin,

Senior Associate Administrator for Traffic Injury Control.

[FR Doc. 06–5844 Filed 6–27–06; 8:45 am]

BILLING CODE 4910–59–P

DEPARTMENT OF TRANSPORTATION

Surface Transportation Board

[STB Finance Docket No. 34899]

NC Railroad, Inc.—Lease and Operation Exemption—Rail Lines of Tennessee Railway Company

NC Railroad, Inc. (NCR), a Class III rail carrier,[1] has filed a verified notice of exemption under 49 CFR 1150.41 [2] to lease and operate approximately one mile of track from Tennessee Railway Company, a wholly owned subsidiary of Norfolk Southern Railway Company. The line runs between milepost TE–0.144 and milepost TE–0.95 at Oneida, TN.

NCR certifies that its projected revenues as a result of the transaction will not result in the creation of a Class II or Class I rail carrier. NCR also certifies that its projected annual operating revenues will not exceed $5 million.

The transaction was originally scheduled to be consummated on June 20, 2006, but NCR's amendment created a new filing date for its notice of exemption. Accordingly, the earliest the parties could consummate the transaction was June 22, 2006, 7 days after the exemption was filed, as NCR has acknowledged.

If the notice contains false or misleading information, the exemption is void *ab initio.* Petitions to revoke the exemption under 49 U.S.C. 10502(d) may be filed at any time. The filing of a petition to revoke will not automatically stay the transaction.

An original and 10 copies of all pleadings, referring to STB Finance Docket No. 34899, must be filed with the Surface Transportation Board, 1925 K Street, NW., Washington, DC 20423–0001. In addition, one copy of each pleading must be served on Kelvin J. Dowd, Slover & Loftus, 1224 Seventeenth Street, NW., Washington, DC 20036.

Board decisions and notices are available on our Web site at *http://www.stb.dot.gov.*

Decided: June 21, 2006.

By the Board, David M. Konschnik, Director, Office of Proceedings.

Vernon A. Williams,

Secretary.

[FR Doc. E6–10180 Filed 6–27–06; 8:45 am]

BILLING CODE 4915–01–P

[1] NCR became a rail carrier when it acquired 42 miles of rail line between Oneida and Devonia, TN, pursuant to the offer of financial assistance procedures at 49 U.S.C. 10904. *See Tennessee Railway Company—Abandonment Exemption—In Scott County, TN, et al.,* STB Docket No. AB–290 (Sub-No. 260X) *et al.* (STB served Mar. 3, 2006).

[2] On June 13, 2006, NCR mistakenly filed its notice of exemption under the class exemption for noncarriers at 49 CFR 1150.31. On June 15, 2006, NCR filed an amended notice invoking the correct class exemption at 49 CFR 1150.41.

DEPARTMENT OF THE TREASURY

Submission for OMB Review; Comment Request

June 22, 2006.

The Department of the Treasury has submitted the following public information collection requirement(s) to OMB for review and clearance under the Paperwork Reduction Act of 1995, Public Law 104–13. Copies of the submission(s) may be obtained by calling the Treasury Bureau Clearance Officer listed. Comments regarding this information collection should be addressed to the OMB reviewer listed and to the Treasury Department Clearance Officer, Department of the Treasury, Room 11000, 1750 Pennsylvania Avenue, NW., Washington, DC 20220.

DATES: Written comments should be received on or before July 28, 2006 to be assured of consideration.

Financial Management Service

OMB Number: 1510–0043.

Type of Review: Extension.

Title: Notice of Reclamation and Debit Request for Recurring Benefit Payments.

Form: FMS 133 and 135.

Description: A program agency authorizes Treasury to recover payments that have been issued after the death of the beneficiary. FMS Form 133 is used to notify the FI. If the FI does not respond to the 133, a debit request Form 135 is sent to the FRB.

Respondents: Business or other for-profit.

Estimated Total Burden Hours: 79,335 hours.

Clearance Officer: Jiovannah Diggs, Financial Management Service, Room 144, 3700 East West Highway, Hyattsville, MD 20782. (202) 874–7662.

OMB Reviewer: Alexander T. Hunt, Office of Management and Budget, Room 10235, New Executive Office Building, Washington, DC 20503. (202) 395–7316.

Michael A. Robinson,

Treasury PRA Clearance Officer.

[FR Doc. E6–10193 Filed 6–27–06; 8:45 am]

BILLING CODE 4810–35–P

DEPARTMENT OF THE TREASURY

Internal Revenue Service

Open Meeting of the Small Business/Self Employed-Taxpayer Burden Reduction Issue Committee of the Taxpayer Advocacy Panel

AGENCY: Internal Revenue Service (IRS), Treasury.

ACTION: Cancellation notice.

SUMMARY: An open meeting of the Small Business/Self Employed-Taxpayer Burden Reduction Issue Committee of the Taxpayer Advocacy Panel has been cancelled (via teleconference). The Taxpayer Advocacy Panel is soliciting public comments, ideas and suggestions on improving customer service at the Internal Revenue Service.

DATES: The meeting that was scheduled Tuesday, July 11, 2006 from 3:30 p.m. to 4:30 p.m. ET has been cancelled.

FOR FURTHER INFORMATION CONTACT: Marisa Knispel at 1–888–912–1227 or 718–488–3557.

SUPPLEMENTARY INFORMATION: Notice is hereby given pursuant to section 10(a)(2) of the Federal Advisory Committee Act, 5 U.S.C. App. (1988) that an open meeting of the Small Business/Self Employed-Taxpayer Burden Reduction Issue Committee of the Taxpayer Advocacy Panel was cancelled for Tuesday, July 11, 2006, for 3:30 p.m. ET via a telephone conference call as published in the **Federal Register** on June 19, 2006. If you would like to have the TAP consider a written statement, please call 1–888–912–1227 or 718–488–3557 or write Marisa Knispel, TAP Office, 10 Metro Tech Center, 625 Fulton Street, Brooklyn, NY 11201. You may also post comments to the Web site: *http://www.improveirs.org.*

Dated: June 21, 2006.

John Fay,

Acting Director, Taxpayer Advocacy Panel.

[FR Doc. E6–10130 Filed 6–27–06; 8:45 am]

BILLING CODE 4830–01–P

Corrections

Federal Register

Vol. 71, No. 124

Wednesday, June 28, 2006

This section of the FEDERAL REGISTER contains editorial corrections of previously published Presidential, Rule, Proposed Rule, and Notice documents. These corrections are prepared by the Office of the Federal Register. Agency prepared corrections are issued as signed documents and appear in the appropriate document categories elsewhere in the issue.

COMMITTEE FOR THE IMPLEMENTATION OF TEXTILE AGREEMENTS

Determination under the Textile and Apparel Commercial Availability Provision of the Dominican Republic-Central America-United States Free Trade Agreement (CAFTA-DR Agreement)

Correction

In notice document 06–4916 beginning on page 30389 in the issue of Friday, May 26, 2006, make the following correction:

On page 30390, in the second column, under the heading **Specifications:**, in the third line, ''*COM041*67'' should read ''67''.

[FR Doc. C6–4916 Filed 6–27–06; 8:45 am]

BILLING CODE 1505–01–D

Federal Register

Wednesday,
June 28, 2006

Part II

Department of Transportation

Federal Railroad Administration

49 CFR Parts 229 and 238
Locomotive Crashworthiness; Final Rule

DEPARTMENT OF TRANSPORTATION

Federal Railroad Administration

49 CFR Parts 229 and 238

[Docket No. FRA–2004–17645, Notice No. 3]

RIN 2130–AB23

Locomotive Crashworthiness

AGENCY: Federal Railroad Administration (FRA), Department of Transportation (DOT).

ACTION: Final rule.

SUMMARY: FRA is issuing comprehensive, minimum standards for locomotive crashworthiness. These crashworthiness standards are intended to help protect locomotive cab occupants in the event of a locomotive collision. Examples of locomotive collision scenarios considered in this rulemaking include collisions with another locomotive, the rear of another train, a piece of on-track equipment, a shifted load on a freight car on an adjacent parallel track, and a highway vehicle at a rail-highway grade crossing. Locomotive crashworthiness must be demonstrated by complying with either the final rule's new performance standards or an FRA-approved design standard.

DATES: *Effective Date:* This final rule is effective August 28, 2006. The incorporation by reference of certain publications listed in the rule is approved by the Director of the Federal Register as of August 28, 2006.

ADDRESSES: For access to the docket to read background documents or comments received, go to *http://dms.dot.gov* at any time or to Room PL–401 on the plaza level of the Nassif Building, 400 Seventh Street, SW., Washington, DC, between 9 a.m. and 5 p.m., Monday through Friday, except Federal Holidays.

FOR FURTHER INFORMATION CONTACT: John Punwani, Office of Research and Development, Federal Railroad Administration, 1120 Vermont Avenue, NW., Mail Stop 20, Washington, DC 20590 (telephone: 202–493–6369); Charles L. Bielitz, Mechanical Engineer, Office of Safety Assurance and Compliance, Federal Railroad Administration, 1120 Vermont Avenue, NW., Mail Stop 25, Washington, DC 20590 (telephone: 202–493–6314); or Melissa Porter, Trial Attorney, Office of Chief Counsel, Federal Railroad Administration, 1120 Vermont Avenue, NW., Mail Stop 10, Washington, DC 20590 (telephone: 202–493–6034).

SUPPLEMENTARY INFORMATION:

I. Statutory and Regulatory Background

A. FRA Regulatory Authority

FRA has broad statutory authority to regulate railroad safety. The Locomotive Inspection Act (LIA) (formerly 45 U.S.C. 22–34, now 49 U.S.C. 20701–20703) was enacted in 1911. It prohibits the use of unsafe locomotives and authorizes FRA (by delegation from the Secretary of Transportation) to issue standards for locomotive maintenance and testing. In order to further FRA's ability to respond effectively to contemporary safety problems and hazards as they arise in the railroad industry, Congress enacted the Federal Railroad Safety Act of 1970 (Safety Act) (formerly 45 U.S.C. 421, 431 *et seq.*, now found primarily in chapter 201 of Title 49). The Safety Act grants the Secretary of Transportation rulemaking authority over all areas of railroad safety (49 U.S.C. 20103(a)) and authority to investigate and penalize violations of any rail safety law. This authority was subsequently delegated to the FRA Administrator (49 CFR 1.49). (Until July 5, 1994, the Federal railroad safety statutes existed as separate acts found primarily in Title 45 of the United States Code. On that date, all of the acts were repealed, and their provisions were recodified into Title 49.)

> The term ''railroad'' is defined in the Safety Act to include all forms of non-highway ground transportation that runs on rails or electromagnetic guideways, * * * other than rapid transit operations within an urban area that are not connected to the general railroad system of transportation.

This definition makes clear that FRA has jurisdiction over (1) rapid transit operations within an urban area that are connected to the general railroad system of transportation, and (2) all freight, intercity, passenger, and commuter rail passenger operations regardless of their connection to the general railroad system of transportation or their status as a common carrier engaged in interstate commerce. FRA has issued a policy statement describing how it determines whether particular rail passenger operations are subject to FRA's jurisdiction (65 FR 42529 (July 2, 2000)); the policy statement can be found in Appendix A to parts 209 and 211 of Title 49 of the Code of Federal Regulations (hereinafter, all references to CFR parts and sections will refer to parts and sections in Title 49 of the Code of Federal Regulations).

Pursuant to its statutory authority, FRA promulgates and enforces a comprehensive regulatory program to address railroad track; signal systems; railroad communications; rolling stock; rear-end marking devices; safety glazing; railroad accident/incident reporting; locational requirements for dispatching of U.S. rail operations; safety integration plans governing railroad consolidations; merger and acquisitions of control; operating practices; passenger train emergency preparedness; alcohol and drug testing; locomotive engineer certification; and workplace safety.

In part 229, FRA established minimum federal safety standards for locomotives. These regulations prescribe inspection and testing requirements for locomotive components and systems, minimum locomotive cab safety requirements, and even basic crashworthiness design requirements for electric multiple-unit type locomotives. On May 12, 1999, FRA issued regulations addressing the safety of passenger rail equipment, including passenger-occupied locomotives (*i.e.*, cab control cars, powered multiple-unit passenger cars). These are found in part 238. However, FRA's existing locomotive safety standards do not address the crashworthiness of conventional locomotives, which comprise the majority of locomotives in use today.

B. Rail Safety Enforcement and Review Act

In 1992, Congress passed The Rail Safety Enforcement and Review Act (RSERA). Pub. L. 102–365, September 3, 1992. In response to concerns raised by railroad employee organizations, members of Congress, and recommendations of the National Transportation Safety Board (NTSB) concerning locomotive crew safety, Congress included mandates concerning locomotive crashworthiness and cab working conditions in the legislation. Section 10 of RSERA, entitled ''Locomotive Crashworthiness and Working Conditions,'' required FRA ''to complete a rulemaking proceeding to consider prescribing regulations to improve the safety and working conditions of locomotive cabs.'' In order to determine whether crashworthiness regulations would be necessary, Congress tasked FRA with assessing the adequacy of Locomotive Crashworthiness Requirements Standard S–580, or any successor standard thereto, adopted by the Association of American Railroads in 1989, in improving the safety of locomotive cabs. Furthermore, Congress specifically mandated that the Secretary, in support of the rulemaking proceeding, consider the costs and benefits associated with equipping locomotives with each of a number of specified design features.

FRA agrees that locomotive crashworthiness protection is necessary because train collisions and derailments can result in crew fatalities and injuries. In the period from 1995 to 1997, 26 locomotive cab occupants were killed and 289 were injured in freight and passenger train accidents in the United States, a yearly average of 105 casualties.[1]

Adopted in 1989, Association of American Railroads (AAR) Specification S–580 (''S–580'') has served as the industry standard for crashworthiness design specifications of new road freight locomotives. At the time of its development, S–580 provided basic enhancements to the crashworthiness of road locomotives. Many of the units built to this specification are of wide-nose cab design, often referred to as the North American cab design. It is generally held throughout the industry that S–580 represented a significant step on the part of the railroad industry to improve the crashworthiness of locomotives.

II. FRA's Response to Section 10 of RSERA

In response to the mandate of Section 10 of RSERA, FRA conducted the necessary research and analysis. FRA undertook steps to determine the health and safety effects of locomotive cab working conditions and evaluated the effectiveness of S–580, along with the benefits and costs of RSERA's specified locomotive crashworthiness features (*i.e.*, braced collision posts, rollover protection devices, deflection plates, shatterproof windows, readily accessible crash refuges, uniform sill heights, anticlimbers, or other equipment designed to prevent overrides resulting from head-on locomotive collisions, equipment to deter post-collision entry of flammable liquids into locomotive cabs, any other device intended to provide crash protection for occupants of locomotive cabs). In an effort to fully address the broad range of issues presented in the RSERA, FRA (1) conducted an industry-wide public meeting to gather information regarding the areas of concern identified in the RSERA, (2) established a locomotive collision database based on detailed accident information gathered from actual collisions, (3) established a research contract to develop and verify a computer model capable of predicting how each of the crashworthiness features in S–580 and in the RSERA affect the collision dynamics and probability of crew injury, and (4) conducted a detailed survey of locomotive crews' cab working conditions and environment. FRA detailed the results of these actions in ''Locomotive Crashworthiness and Cab Working Conditions Report to Congress,'' dated September 18, 1996. A copy of this report has been placed in the docket of this rulemaking as Document No. FRA–2004–17645–9. Actions taken to gather information for that report are described below.

First, meetings with all segments of the railroad industry formed an essential part of FRA's plan to meet the requirements of the RSERA. FRA held an industry-wide public meeting on June 23, 1993, to gather information from the industry on each of the areas of concern identified in Section 10 of the RSERA and to inform the industry of FRA's approach. This meeting was well attended by all segments of the rail industry, including rail labor, freight railroads, locomotive builders, the National Railroad Passenger Corporation (Amtrak), and commuter railroads.

At this initial meeting, some of the railroads urged that improvements in crash avoidance technology should be pursued in lieu of improved crashworthiness features. FRA is currently pursuing crash avoidance technology and on March 7, 2005, published a separate rule (part 236, subpart H) on performance standards for the use and development of processor-based signal and train control systems. See 70 FR 11052. The issue of collision avoidance is more fully discussed below in section IV of the preamble.

Several participants in the public meeting expressed an opinion that a series of smaller, informal meetings with the separate segments of the rail industry would provide more detailed information regarding locomotive crashworthiness. As a result, FRA held a number of such meetings which included the following organizations:

American Public Transportation Association (APTA);
American Short Line and Regional Railroad Association (ASLRRA);
Amtrak;
AAR;
Brotherhood of Locomotive Engineers (now Brotherhood of Locomotive Engineers and Trainmen (BLET);
Burlington Northern (now Burlington Northern Santa Fe Railway) (BNSF);
DuPont (glazing);
General Electric Transportation Systems (GE);
General Motors-Electro-Motive Division (GM/EMD);
Morrison Knudsen (MK); NTSB;
Sierracin (glazing); and
United Transportation Union (UTU).

These meetings generated considerable discussion about the adequacy of the AAR's Locomotive Crashworthiness Standard S–580 (1989), the requirement to conduct research and analysis, including computer modeling and full-scale crash testing of the safety of locomotives, and the costs and benefits associated with RSERA's specified locomotive crashworthiness features. During the meetings, FRA requested specific cost or test data to support the positions taken by the various organizations. Some supply industry organizations were forthcoming with this data, while other organizations were apparently unable or unwilling to respond.

Second, FRA proceeded based on the understanding that earlier locomotive collision accident reports did not contain the data necessary to support crash modeling. Thus, in 1992, FRA instructed field inspectors to investigate all accidents involving either a collision of two trains or a collision of one train with an object weighing ten tons or more, regardless of monetary damage thresholds and locomotive design. This accident data provided information which FRA used to determine the possible benefits of a crashworthiness regulation.

Third, with the support of the Volpe National Transportation Systems Center (''Volpe Center''), FRA contracted with Arthur D. Little, Inc. (ADL) to predict the benefit, if any, of each of the locomotive crashworthiness features listed in Section 10 of the RSERA. Using the collision data collected by FRA, ADL performed a series of analyses using computer models to evaluate the effectiveness of specific crashworthiness design features.[2]

Lastly, FRA's approach to the research and analysis tasks focused on the cost and benefits of design changes to conventional locomotives operating at speeds of less than 80 mph. The work done to meet the requirements of the RSERA was not intended to address safety concerns unique to high speed rail transportation. FRA has addressed high speed rail safety concerns,

[1] Regulatory Impact Analysis, p. iii of Appendix B of the Analysis. These statistics were taken from the data set of injuries/fatalities that, because of their circumstances, could have been prevented by the crashworthiness standards contained in this rule. Thus, this set does not include the total number of all locomotive cab occupant fatalities/injuries that occurred during this time period.

[2] Mayville, R. A., Stringfellow, R. G., Rancatore, R. J., Hosmer, T. P., 1995, ''Locomotive Crashworthiness Research, Volumes 1 through 5,'' DOT/FRA/ORD–95/8.1–8.5. A copy of each cited report has been placed in the docket of this rulemaking as Document No. FRA 2004–17645–13.

including crashworthiness design, in part 238.

FRA's Report to Congress contained an implementation strategy to address each of the issues raised by the RSERA.[3] FRA determined that S–580, which provided for improvements in collision posts, anti-climbing arrangements, and the short hood structure, represented a significant step on the part of the railroad industry to improve locomotive crashworthiness. The research and analysis conducted in response to the RSERA showed that S–580 could be further improved to reduce casualties without significantly impacting locomotive design. FRA also found that (1) modified front-end structural designs incorporating stronger collision posts, (2) full-height corner posts with increased strength, and (3) utilization of roof longitudinal strength to support structural members from crushing may provide opportunities for additional protection for locomotive cab occupants. FRA even evaluated the potential to create a designated crash refuge within the space that these measures would help to protect. Furthermore, based on accident/incident experience and recent advances in fuel tank design being undertaken by the industry, FRA concluded that fuel tank design could be significantly improved to minimize the risk and severity of future fuel spills. Finally, FRA identified locomotive cab emergency lighting and more reliable means of rapid egress during derailments and collisions as additional subject areas which appeared to warrant further exploration.

While the study findings clearly indicate that several crashworthiness features warranted further exploration, the findings also indicated that several features, including rollover protection, uniform sill heights, and deflection plates did not warrant further action. Rollover protection costs would be substantial, and no material need for such protection was demonstrated by the accident data. Design limitations of multi-use freight locomotives all but preclude practical design possibilities for deflection plates, and FRA found that a successful deflection device would cause collateral safety problems. Uniform sill heights were found not to significantly reduce life-threatening collision damage, would have a high cost, and any benefit would accrue only after an extended period over which older standard locomotives would be phased out of service. The perceived benefits of uniform sill height might be more reliably achieved by improved anti-climbing arrangements, and the report proposed that development and evaluation of a design concept be explored.

Many of the proposed measures were practical for application only to newly constructed locomotives. Further, additional information and research were required to determine the cost-effective basis of these concepts, and to assure the acceptance of these measures by locomotive crews. In order for protective features to be effective, crew members must have confidence that they will function as intended. Crew members who lack confidence in the safety measures employed may be inclined to jump from a locomotive prior to a collision, resulting in a high probability of serious injury or death.

FRA determined that it would use its Railroad Safety Advisory Committee to further develop these safety issues thereby tapping the knowledge and energies of a wide range of interested parties.

III. Railroad Safety Advisory Committee (RSAC) Recommendations

In March 1996, FRA established the RSAC, which provides a forum for consensual rulemaking and program development. The Committee includes representation from all of the agency's major customer groups, including railroads, labor organizations, suppliers and manufacturers, and other interested parties. A list of member groups follows:

AAR;
American Association of Private Railroad Car Owners (AARPCO);
American Association of State Highway & Transportation Officials (AASHTO);
American Train Dispatchers Department/BLE (ATDD/BLE) (now American Train Dispatcher Association);
Amtrak;
APTA;
ASLRRA;
Association of Railway Museums (ARM);
Association of State Rail Safety Managers (ASRSM);
BLET;
Brotherhood of Maintenance of Way Employes (now Brotherhood of Maintenance of Way Employes Division (BMWED);
Brotherhood of Railroad Signalmen (BRS);
Federal Transit Administration (FTA) (associate member);
High Speed Ground Transportation Association;
Hotel Employees & Restaurant Employees International Union;
International Association of Machinists and Aerospace Workers;
International Brotherhood of Boilermakers and Blacksmiths;
International Brotherhood of Electrical Workers (IBEW);
Labor Council for Latin American Advancement (LCLAA) (associate member);
League of Railway Industry Women (associate member);
National Association of Railroad Passengers (NARP);
National Association of Railway Business Women (associate member);
National Conference of Firemen & Oilers;
National Railroad Construction and Maintenance Association;
NTSB (associate member);
Railway Supply Institute (RSI);
Safe Travel America;
Secretaria de Communicaciones y Transporte (associate member);
Sheet Metal Workers International Association (SMW);
Tourist Railway Association Inc.;
Transport Canada (associate member);
Transportation Communications International Union/BRC (TCIU/BRC);
Transport Workers Union of America (TWUA); and
UTU.

When appropriate, FRA assigns a task to RSAC, and after consideration and debate, RSAC may accept or reject the task. If the task is accepted, RSAC establishes a working group that possesses the appropriate expertise and representation of interests to develop recommendations to FRA for action on the task. The working group develops the recommendations by consensus. The working group may establish one or more task forces to develop the facts and options on a particular aspect of a given task. The task force reports to the working group. If a working group comes to unanimous consensus on recommendations for action, the working group presents the package to the RSAC for a vote. If a simple majority of the RSAC accepts the proposal, the RSAC formally recommends the proposal to FRA.

FRA then determines what action to take on the recommendation. Because FRA staff has played an active role at the working group level in discussing the issues and options and in drafting the language of the consensus proposal, and because the RSAC recommendation constitutes the consensus of some of the industry's leading experts on a given subject, FRA is often favorably inclined toward the RSAC recommendation. However, FRA is in no way bound to follow the recommendation, and the

[3] "Locomotive Crashworthiness and Cab Working Conditions Report to Congress", Office of Safety Assurance and Compliance, Federal Railroad Administration, 1996.

agency exercises its independent judgement on whether the recommended rule achieves the agency's regulatory goal, is soundly supported, and is in accordance with policy and legal requirements. Often, FRA varies in some respects from the RSAC recommendation in developing the actual regulatory proposal. If the working group or RSAC is unable to reach consensus on recommendations for action, FRA moves ahead to resolve the issue through traditional rulemaking proceedings.

On June 24, 1997, FRA tasked RSAC with the responsibility of making recommendations concerning standards for locomotive crashworthiness. Specifically, RSAC was charged with the investigation and development, if necessary, of crashworthiness standards to ensure the integrity of locomotive cabs in collisions, thereby minimizing fatalities and injuries to train crews. This task was to be performed in three phases. RSAC would first review relevant accident data and existing industry standards to determine which, if any, appropriate modifications to the cab structure are required to provide additional protection above that provided by S–580. In particular, RSAC was to specifically consider the following features: full-height corner posts; improved glazing design and support structure; equipment to prevent the post-collision entry of flammable liquids; and improved fuel tank design. Second, RSAC would examine to what extent improved anticlimber designs and/or incorporation of shelf couplers, used to complement the existing S–580 standards, serve to mitigate the effects of the above-listed collision scenarios. Third, RSAC would examine past and present methods of cab egress, along with the benefits of emergency lighting in the event of a collision. Based on a review of relevant accident data, available technology, implementation costs, and other applicable factors, RSAC would then develop appropriate recommendations.

To accomplish the above goals, RSAC created the Locomotive Crashworthiness Working Group (''Working Group''). Created on June 24, 1997, this group of about 40 members consisted of FRA personnel and representatives from railroad labor and management, States, and two major manufacturers of locomotives. The following organizations provided representatives to serve on the Working Group:

AAR;
AASHTO;
APTA;
ASLRRA;
BLET;
BMWED;
FRA;
IBEW;
RSI;
SMW;
UTU; and
NTSB.

The Working Group broke the task into three distinct phases. The first phase included review of accident data to formulate the most prevalent accident scenarios involving injuries and deaths. Second, the Volpe Center, along with contractor ADL, performed detailed analyses of how design improvements/additions to S–580 would affect the probable resulting injuries/deaths in each of five accident scenarios described later in this preamble.[4] Third, the Working Group analyzed and deliberated the proposed costs and benefits to determine the effectiveness of each of the proposed changes to S–580. The Working Group then presented its findings to the full RSAC Committee.

The Working Group conducted its meetings on the following dates at the following locations:

(1) September 8–9, 1997, Washington, DC;
(2) February 2–3, 1998, Jacksonville, FL;
(3) April 9–10, 1998, Fort Pierce, FL;
(4) July 14–15, 1998, Las Vegas, NV;
(5) October 28–29, 1998, Kansas City, MO;
(6) February 25–26, 1999, Washington, DC;
(7) June 15–16, 1999, Las Vegas, NV;
(8) October 19–20, 1999, Sterling, VA;
(9) December 13–14, 1999, Jacksonville, FL;
(10) October 9–10, 2001, Washington, DC;
(11) January 17–18, 2002, Jacksonville, FL; and
(12) June 28–29, 2005, San Francisco, CA.

Minutes from the above-referenced meetings have been placed in the docket of this proceeding.

The Working Group had its inaugural meeting on September 8–9, 1997, in Washington, DC. After reviewing its formal Task Statement to gain an understanding of the scope of its mission, the Working Group recognized that a smaller, more manageable group could more effectively consider the technical requirements and debate the advantages and disadvantages of the technical options available. Thus, the S–580/Engineering Review Task Force (''Engineering Task Force'') was created for this sole purpose. The Engineering Task Force was made up of Working Group members who either volunteered or named a fellow member as a representative. The Engineering Task Force met four times and conducted meetings by telephone conference on three occasions. These task force meetings served to progress the technical aspects of the issues and were open to all members of the Working Group. These meetings were somewhat less formal and were conducive to free exchange of technical information and ideas. A summary report on the Engineering Task Force's deliberations was made at each subsequent Working Group meeting.

The Working Group acknowledged the three distinct elements to the task. First, the group would need to identify, using recent accident data, the most prevalent locomotive collision scenarios which involve injuries and deaths. To this end, the Working Group requested that FRA review pertinent accidents for presentation at the February 2–3, 1998 Working Group meeting. The second element involved detailed engineering analysis of the effectiveness of specific crashworthiness features. To this end, FRA pledged the technical assistance of the Volpe Center, along with required support from outside contractors as needed. Third, the Working Group expressed interest in understanding the projected economic impact of any new requirements.

FRA commenced a review of locomotive accident data from 1995 to 1996 as a representative sampling of accidents. FRA then narrowed the pool of accidents to 23 and presented summaries of them to the Engineering Task Force at its first meeting. Collective discussion of these accidents with railroad and labor members of the Engineering Task Force helped to flesh out all the details of the locomotive types and designs. The Engineering Task Force then classified all 23 collisions into five major categories and developed a sequence of events, or scenario, for each accident. These five scenarios are:

[4] Tyrell, D., Severson, K., Marquis, B., Martinez, E., Mayville, R., Rancatore, R., Stringfellow, R., Hammond, R., Perlman, A.B., 1999, ''Locomotive Crashworthiness Design Modifications Study,'' Proceedings of the 1999 IEEE/ASME Joint Railroad Conference, April 13–15, 1999, IEEE Catalog Number 99CH36340, ASME RTD Volume 16; Tyrell, D.C., Martinez, E.E., Wierzbicki, T., ''Crashworthiness Studies of Locomotive Wide Nose Short Hood Designs,'' Proceedings of the 8th ASME Symposium on Crashworthiness, Occupant Protection and Biomechanics in Transportation November 14–19, 1999; Nashville, Tennessee; Tyrell, D., Severson, K., Marquis, B., Perlman, A.B., ''Simulation of an Oblique Collision of a Locomotive and an Intermodal Container,'' Proceedings of the 8th ASME Symposium on Crashworthiness, Occupant Protection and Biomechanics in Transportation November 14–19, 1999; Nashville, Tennessee.

(1) Coupled locomotive override resulting from a head-on train-to-train collision;

(2) Colliding locomotive override resulting from a head-on train-to-train collision;

(3)[5] Rear end/overtaking collision between a locomotive and a freight car;

(4) Oblique/raking collision between a locomotive and a freight car or part thereof, at a switch or upon passing a train on the adjacent track; and

(5) Offset collision between locomotive and freight car.

Once these scenarios were identified, a representative accident for each scenario was chosen to be studied in detail. The Engineering Task Force next gathered as many details as possible concerning the accidents and determined the crashworthiness features which were involved or could have had an effect in each scenario. Table 1 shows the scenarios, collision mode, relevant crashworthiness features, and representative accidents.

TABLE 1.—COLLISION SCENARIO, COLLISION MODE, AND ACCIDENT REPRESENTATIVE OF SCENARIO.

Collision scenario	Collision mode	Modified component	Accident location and date
1. Head-on collision between two freight trains	Coupled locomotive override.	Anti-climber Shelf-coupler	Smithfield, WV, August 20, 1996.
2. Head-on collision between two freight trains	Colliding locomotive override.	Collision post	West Eola, IL, January 20, 1993.
3a. Overtaking collision, locomotive to flat car	Loading of window frame structure.	Window frame structure	Phoenixville, PA, August 23, 1996.
3b. Grade crossing collision with highway truck carrying logs.	Loading of window frame structure.	Window frame structure	Phoenixville, PA, August 23, 1996.
4. Object, such as a trailer, fouling right-of-way of locomotive.	Corner loading of locomotive short hood.	Short hood	Selma, NC, May 16, 1994.
5. Offset collision between a locomotive and a freight car.	Corner loading of locomotive underframe.	Front plate	Madrone, NM, October 13, 1995.

Figure 1 shows schematic illustrations for the inline collision scenarios—Scenarios 1, 2, and 3b. In Scenario 1, the principal concern is a trailing locomotive overriding the leading locomotive, consequently eliminating the operator's cab (survival space) during the collision. In scenario 2 the principal concern is the relatively strong underframe of one colliding locomotive overriding the underframe of the other locomotive. In this scenario, the overriding locomotive crushes the operator's cab of the overriden locomotive. In scenario 3, the principal concern is the destruction of the upper portion (window area) of the operator's cab.

[5] The report from the Accident/Data Analysis and Benefits Assessment Task Force describes 6 scenarios. It contains 2 scenarios in which the window structure is impacted. In one, an overriding freight car impacts the window structure during a rear-end collision; in the other, logs impact the window structure in a grade crossing collision with a truck carrying logs. The Working Group initially considered the former, but the latter was used for the basis for crashworthiness evaluation of the window structure. See Table 1.

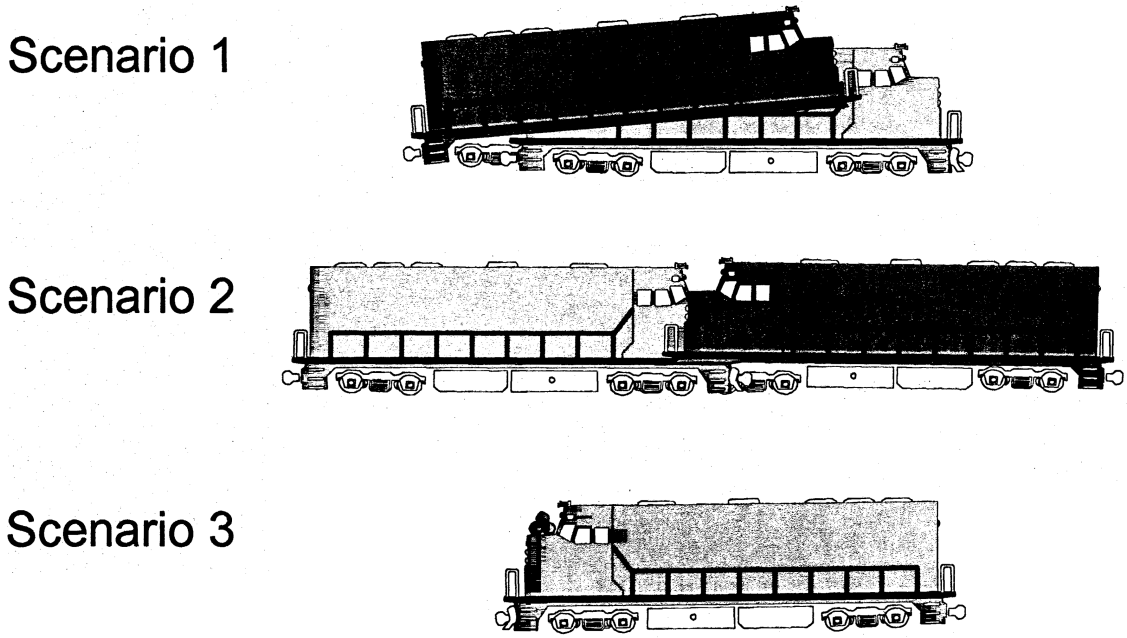

Figure 1. Schematics of In-Line Collision Scenarios.

Figure 2 shows schematic illustrations of the oblique collision scenarios—Scenarios 4 and 5. The illustration for Scenario 4 shows an intermodal trailer fouling the right of way of an oncoming locomotive. The principal concern is with the trailer striking the short hood outboard of the collision post and consequently causing sufficient damage to intrude into the operator's cab. The illustration of Scenario 5 shows a locomotive obliquely colliding with a freight car at a switch. The principal concern is that the freight car can intrude into the operator's volume by raking down the side of the locomotive.

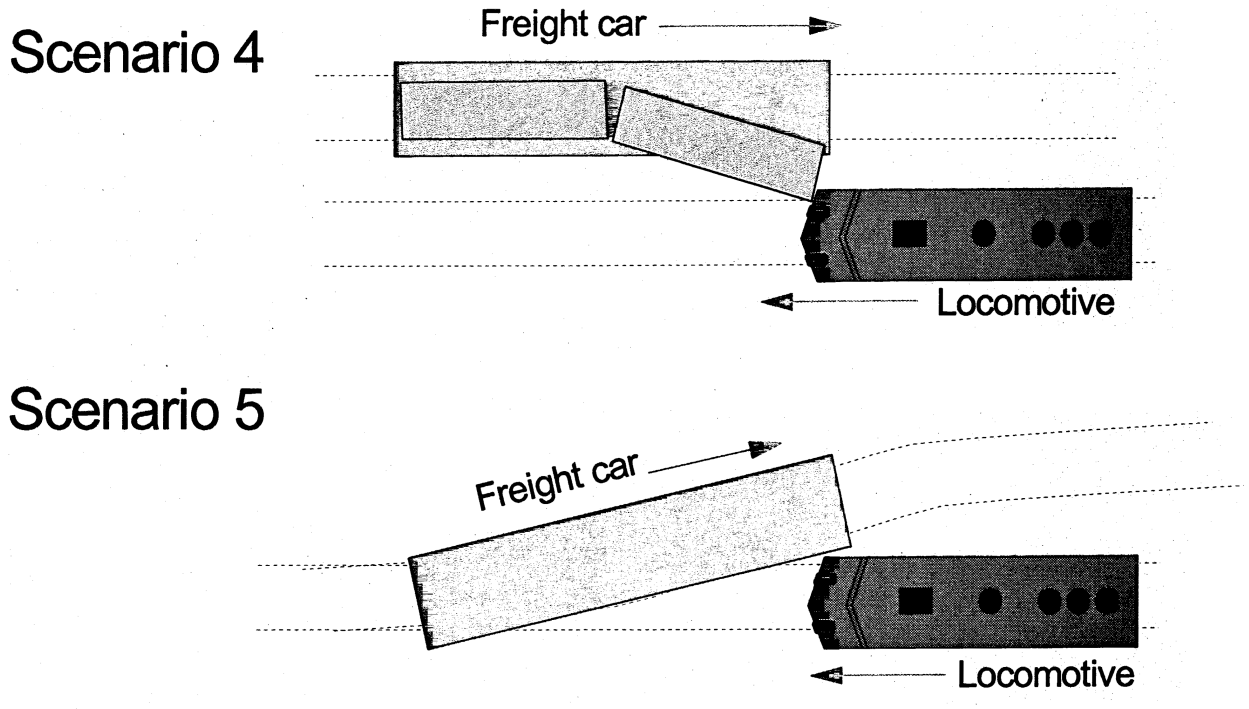

Figure 2. Schematics of Oblique Collision Scenarios.

Each collision scenario presents a significant risk of injury or death to locomotive cab occupants, and the Working Group recognized that effective reduction of this risk is the primary goal when considering locomotive crashworthiness standards.

The Working Group next examined a list of crash survival concepts that FRA had previously assembled. The Engineering Task Force discussed each concept in light of the accidents reviewed. There was general agreement among Task Force members about the continued need for braced collision posts, corner posts, and the utilization of crash energy management principles to minimize secondary collisions within the locomotive cab. The Task Force also discussed the variance of underframe sill heights, the frequency of locomotive roll-over occurrences, and the concept of crash refuges, but ultimately agreed with FRA's Report to Congress that these features held little promise as effective locomotive crashworthiness features and that further use of resources in pursuit of these concepts was not warranted. The Task Force then discussed collision post strength, wide-nose locomotive cabs and cab corner strength as well as locomotive front end strength up to the window level. The Task Force felt that these concepts required further development in order to further mitigate the consequences from the reviewed accidents, which included side/oblique collisions, coupled locomotive override, and shifted load collisions.

Standard S–580 includes the use of collision posts, wide-nose cab configurations of greater strength, and anti-climbing means to prevent override. The Working Group found that the accident survey showed the effects of S–580 on the survivability of locomotive crews to be substantial. However, they also recognized that higher levels of protection could be achieved by enhancing the strength requirements for future locomotive designs and by fortifying the current design of locomotives where possible and economically practicable. Thus, for comparison purposes, the group decided to model each of the collision scenarios to gauge the performance of each of the crashworthiness features under consideration. Data from the accidents was used for comparison with the analytic models and, where possible, for information on the crashworthiness performance of the baseline S–580 locomotive design. For Scenarios 3a and 3b, the model was compared with the accident that occurred in Phoenixville, PA, on August 23, 1996, but the grade crossing collision, also occurring on August 23, 1996 in Phoenixville, with logs impacting the window structure was used to evaluate the influences of changes in the window structure.

The Volpe Center, locomotive manufacturers and remanufacturers, and manufacturers of locomotive components made presentations to the Working Group on the current strength of the crash-related components and discussed the possibility of further strengthening of these components to improve overall crashworthiness. In addition, all members of the Working Group engaged in extensive discussion of these issues. Thus, only enhancements which were currently feasible were modeled.

In all, the Working Group considered the following locomotive crashworthiness features:

—*Shelf couplers:* A representative of the Mechanical Committee of Standard Coupler Manufacturers (MCSCM) reviewed the ''shelf coupler'' concept with the Working Group and traced its development from concept to the current status. Every freight car has a bottom-shelf E head coupler. Double shelf (top- and bottom-shelf) couplers are mandated by FRA on tank cars used to haul hazardous materials. These shelves limit vertical motion between two coupled couplers to approximately ±7¼ inches (184 mm). Passenger cars are typically equipped with tightlock couplers which keep the coupler faces at the same height. These couplers have demonstrated their effectiveness in preventing override for their respective equipment. During the discussion it was pointed out that a top shelf might assist in preventing override in a rear-end collision although it would require that a coupling actually occur for the shelf to be effective. However, type-F couplers commonly applied to locomotives already incorporate a top shelf feature. After deliberations, the Working Group decided not to pursue the concept of double shelf couplers as effective crashworthiness improvements. It was further noted that the coupling of MU cables and the air hoses between locomotives would be made more difficult if shelf couplers were required on locomotives. The potential for such coupler designs in preventing locomotive-to-locomotive override in a head-on collision was nonetheless evaluated.

—*Interlocking anti-climber:* The anti-climber design employed by the Canadian National Railway Company (CN) was evaluated. This design incorporates thicker webs and flanges than typical North American designs, and also includes exposed flanges running the width of the anti-climber.

—*Stronger collision posts:* Preliminary designs of collision posts with strengths up to the strength of the main underframe structure of the locomotive were developed and evaluated. Principal modifications considered were the addition of flanges and tapering the collision post.

—*Stronger window area structure:* Increased cab strength above the short hood was evaluated. Modifications considered included the use of thicker sheet metal for the window frame members.

—*Stronger short hood:* The influence of short hood strength on locomotive crashworthiness in an oblique collision was evaluated. Modifications evaluated included thickness of the short hood and the material used to make the short hood.

—*Front plate:* Increased front plate strength was considered as a potential modification for increased locomotive crashworthiness in an oblique collision with a freight car. The modification considered consisted of increased front plate thickness.

The results of the study indicate that strengthened collision posts and short hoods resulted in increased crashworthiness for particular collision scenarios. Shelf couplers were found not to be effective in preventing coupled locomotive override. Due to the fracture that occurs as the CN anti-climber design longitudinally crushes, this design was found to be ineffective in supporting the vertical forces that occur during locomotive-to-locomotive override, consequently allowing such overrides to occur. For an oblique collision of a locomotive with an empty hopper car, in which the locomotive is principally engaged below the underframe, modifications to the locomotive are not likely to influence the outcome of the collision.

ADL and Volpe Center representatives, presented results from their detailed analyses of how design improvements/additions in S–580 would affect the probable resulting injuries/deaths in each of the five scenarios (a copy of the results has been placed in the docket of this proceeding). Then, the Working Group analyzed and considered the proposed costs and benefits to determine the effectiveness of each of the proposed changes to S–580. The group also considered a performance standard for locomotive crashworthiness design.

From this point forward, the Working Group, assisted by the Task Force, debated the format for specifying the crashworthiness requirements, many issues relating to feasibility of alternative structures, and the economic impact of the proposed new requirements. Throughout, the group remained convinced that significant safety benefits could be achieved. The AAR members volunteered to adopt a specification (which would become AAR S–580–2005) meeting the performance criteria under discussion. This would act as a model design standard which satisfies the crashworthiness performance requirements. The group then focused its attention on the details of AAR S–580–2005 in order to refine and optimize them.

On November 2, 2004, FRA published a notice of proposed rulemaking (NPRM) addressing locomotive crashworthiness. In issuing the NPRM, FRA adopted the recommendations of the Working Group and the full RSAC. See 69 FR 63890. The NPRM provided for a 60-day comment period and provided interested parties the opportunity to request a public hearing. Based upon a request from an interested party, FRA issued a notice on January 12, 2005 extending the comment period from January 3, 2005 until February 3, 2005. See 70 FR 2105. FRA received comments from six interested parties.

On June 28 and 29, 2005, the Working Group conducted a meeting to review and discuss the comments received in response to the NPRM. Minutes from this meeting have been placed in the docket of this proceeding. The Working Group discussed all of the issues raised in the comments and considered various methods by which to address the comments. Based on information and discussions held at this meeting, the Working Group developed a recommendation for a final rule.

In July 2005, the Working Group presented its recommendations for resolution of the public comments to the full RSAC. On August 5, 2005, the RSAC voted to recommend issuance of the final rule while addressing the comments as proposed by the Working Group. FRA, having fully participated in the RSAC review, and finding that the final rule will improve rail safety, has accepted the recommendations of the RSAC in completing this final rule. FRA has also made various editorial corrections necessary to present in a clear, concise, and technically correct manner the intended final rule.

FRA has worked closely with the RSAC in the development of its recommendations and believes that the RSAC effectively addressed locomotive crashworthiness standards. FRA has greatly benefitted from the open, informed exchange of information that has taken place during meetings. There is general consensus among labor, management, and manufacturers concerning the primary principles FRA sets forth in this final rule. FRA believes that the expertise possessed by the RSAC representatives enhances the value of the recommendations, and FRA has made every effort to incorporate them in this final rule.

IV. Major Issues

A. Promulgation of Performance Standards Where Possible

FRA has endeavored to promulgate performance requirements in this final

rule rather than the more prescriptive design standards. FRA understands that this approach allows for greater flexibility in the design of locomotives and believes this approach has a better chance of encouraging innovation in locomotive design than less flexible design standards.

The following discussion includes a description of performance and design standards, the advantages and disadvantages of each, and the relationship between the design and performance standards.

Performance standards describe the behavior, or performance, of systems under prescribed circumstances. The principal advantage of such standards is that how the performance is achieved is not specified; any design approach can be used. The principal drawback to such standards for crashworthiness is that either destructive tests or detailed analyses (*i.e.*, computer simulation) are required in order to assure that the system can achieve the desired level of performance.

Design standards prescribe conditions which do not explicitly relate to the performance of the system. The principal advantage of such standards is that compliance can be verified with either non-destructive tests or closed-form analyses (*i.e.*, hand calculations). The principal disadvantages are that the desired level of performance is not guaranteed, assumptions about performance must be made when fashioning a particular design approach, and innovative approaches to achieving the regulatory objective may be precluded.

The Working Group considered specifying crashworthiness through design standards and performance standards. The Working Group recommended that design standards be employed for industry standards, and that a combination of design and performance standards for the federal regulations. The Working Group endeavored to have the recommended industry standards and the recommended federal regulations provide equivalent levels of crashworthiness.

This final rule includes both performance requirements and design requirements. The Working Group recognized that in certain cases, design standards are identified as presumptively responsive to performance requirements. This approach permits builders to use accepted designs without conducting costly analyses.

While the Working Group endeavored in its recommendations to make both sets of requirements as equivalent as possible, because of the differences in their nature, it is impossible to make them completely equivalent. The equivalence of the design and performance standards is discussed in detail in: Martinez, E., Tyrell, D., ''Alternative Analyses of Locomotive Structural Designs for Crashworthiness,'' presented at the 2000 International Mechanical Engineering Congress and Exposition, November 6, 2000, Orlando, FL, and included in the docket of this proceeding as Document No. FRA 2004–17645–10. There are no guarantees that a locomotive built to the design specification will have the performance required by the performance specification. If some aspect of the design approach assumed in developing the design requirements is changed, it may be possible to meet the design requirements but not meet the level of desired performance. Nevertheless, FRA believes that this final rule will accomplish the intended risk reduction.

Since performance standards are not appropriate for every regulation, it must first be determined whether certain factors preclude their use. For example, performance standards are not effective for regulation in areas where it is difficult to determine compliance (*i.e.*, a regulation requiring safer piloting of aircraft) or where determination of a proper minimum level of performance cannot be made easily or cost-effectively (see ''Performance-Based Regulations Guide,'' Federal Aviation Administration, October 31, 1997, a copy of which has been placed in the docket of this proceeding).

The Working Group sought to recommend locomotive crashworthiness performance standards where possible and identified the locomotive front end structure design as the best candidate for regulation through performance requirements. There was some concern among the Working Group members that if FRA issued performance requirements in this area, computer models would be required to show compliance with performance requirements for each new locomotive design. Thus, the Working Group decided to recommend that S–580 be incorporated by reference in its entirety. This concept became further refined by maintaining the performance requirements, yet providing a model design standard which, if met, would likely satisfy the performance requirements.

The Working Group's approach encourages introduction of more innovative designs. As previously noted, AAR agreed to provide the model design standard in the form of an enhanced S–580. Thus, the Working Group focused its efforts on developing a model design standard for locomotives of conventional design, herein called AAR S–580–2005.

Rather than requiring every design to show satisfaction of the performance standards here, FRA has offered AAR S–580–2005 as a conventional model design standard. FRA, in consultation with the RSAC Working Group, has performed the necessary analysis to show that AAR S–580–2005 meets the performance standards in most instances.

All of the subject areas covered by this final rule, other than locomotive front end, are presented in terms of design standards rather than performance requirements. This formulation required in-depth analysis of accident history, creation and validation of computer models, and comparison of various design improvements versus their baseline design. This was necessary to ensure that the minimum requirements being developed were in fact feasible and necessary. Also, S–580 provided a convenient and appropriate benchmark for testing of further improvements in this field, whereas FRA is not aware of any standards for subject areas such as locomotive cab interior configuration or locomotive cab emergency egress.

FRA will regulate designs for anti-climbing devices and underframe strength through design standards, in accordance with AAR S–580–2005. Under this standard, underframe strength is maintained at the level utilized in prior construction, providing basic compatibility among old and new locomotives. During preparation of the proposed rule, the AAR revised its anti-climbing standard to make it more rigorous by specifying that the required load (100,000 pounds) be met as applied to a 12 inch width anywhere along the anti-climber perimeter, in contrast to 200,000 pounds applied across the full width of the anti-climber. The Working Group recognized that even this improved structure would be of limited use in a head-on collision with another locomotive, because of horizontal crushing that would typically occur before the device could engage vertically. However, the group did find evidence that anti-climbing devices do provide protection to cab occupants in the event of a collision with a highway vehicle. FRA plans additional research in this area in the future.

FRA understands that these standards will not create absolutely crashworthy locomotives, but rather will tend to optimize crashworthiness design features in order to increase cab occupant safety under some of the most

common collision conditions. Since its inception in the early 1990's, S–580 has had a positive effect on locomotive crashworthiness design. This final rule is intended to capture the benefits of the industry's initiative and improve upon it where possible. FRA believes the RSAC resources were the best forum for recognizing and generating such improvements.

Other efforts are being undertaken by the industry and by FRA to reduce the risk of locomotive collisions. For instance, on March 7, 2005, FRA issued a rule on performance standards for the use and development of processor-based signal and train control systems (part 236, subpart H). See 70 FR 11052. The implementation of positive train control[6] (PTC) technology could reduce the number of train-to-train collisions. Current federal and state programs encourage the safety improvement of highway-rail at-grade crossings (including initiatives targeted at drivers of heavy trucks) and help reduce the risk of locomotive collisions. The risks associated with locomotive collisions with offset intermodal containers on freight cars on parallel tracks are being addressed by joint industry/FRA programs to promote better securement of trailers and containers.

However, all of these collision avoidance strategies require time and resources to work, and there is significant uncertainty regarding their full implementation. Further, as rail operations and highway traffic grow, significant effort may be required to ensure that collision-related casualties do not grow as well. Accordingly, taking action to mitigate the effects of collisions remains a prudent element of public policy, and is likely to remain so for some years to come.

B. Application to New Locomotives (See Also Section-by-Section Analysis for § 229.203)

It should be emphasized that FRA is not imposing these locomotive crashworthiness requirements on the current locomotive fleet. At this time, FRA believes safety benefits resulting from crashworthiness improvements would be best realized through future locomotive designs, rather than by retrofitting the current fleet. However, what ought to be considered a ''new locomotive'' for purposes of this final rule merits discussion.

FRA uses the locomotive build date of on or after January 1, 2009, for determining whether the locomotive is subject to the requirements of this final rule. This should give railroads and locomotive manufacturers adequate time to take necessary steps to ensure that these new locomotives will be in compliance with these requirements, and it corresponds with the date selected by the AAR for the revised S–580 standard to be implemented by manufacturers.

In the NPRM, FRA was particularly interested in whether a locomotive rebuilt with new components atop a previously-used underframe, or ''decked'' locomotive, should qualify as a new locomotive. These ''remanufactured'' locomotives may have a future life span nearly equivalent to a locomotive constructed on a new underframe. FRA previously defined ''new locomotive'' to include those locomotives rebuilt with a previously-used underframe and containing no more than 25% previously-used parts (weighted by cost). FRA invited comment on this issue and whether any other distinct class of locomotive should be considered a ''new locomotive'' for the purposes of this rule. FRA received comments from three parties seeking clarification of FRA's definition of ''remanufactured'' locomotive. These comments are addressed and discussed in the section-by-section analysis of ''Section 229.5 Definitions.''

FRA encourages, as discussed by the Working Group, the use of sound consist[7] management principles to place improved, more crashworthy locomotives as lead locomotives in consists. As these new locomotives are phased in, they will only comprise a portion of the fleet, and railroads will be faced with making decisions regarding their placement in a consist. FRA believes the benefits of this rule are maximized when these newer locomotives are used in the lead position to provide additional protection to the operating crews, and not in trailing positions behind older, less crashworthy locomotives, but FRA has not mandated the placement of the newer locomotives. The Working Group did not believe a requirement to mandate placement of these newer locomotives in the lead position would be beneficial, and further believed that the issue is relevant only during the phase-in period. In any event, in the future the entire locomotive fleet will be built to these or future crashworthiness standards. In the NPRM, commenters were invited to address this issue.

FRA received one comment on this issue. The commenter believed that since all future locomotives will be built to these new crashworthiness standards, a placement requirement would soon be unnecessary. In addition, the commenter believed that the requirement to place newer locomotives in the lead position would prove to be an ''operational nightmare'' for railroads to implement. The RSAC, through the Working Group, discussed this issue and agreed with the commenter that a placement requirement should not be implemented. As FRA has found that there is no current need to mandate the placement of newer locomotives in the lead position, FRA has adopted the RSAC's recommendation.

V. Section-by-Section Analysis

Amendments to Part 229

In contrast to requirements for passenger-occupied cab control cars and multiple unit (MU) locomotives, there are no current federal regulations governing conventional locomotive crashworthiness design. These new regulations revise subpart D of part 229 to address locomotive crashworthiness design for conventional locomotives.

Subpart A—General

Section 229.5 Definitions

This section contains an extensive set of definitions. FRA intends for these definitions to clarify the meaning of terms as they are used in the text of the final rule. The final rule retains all of the definitions proposed in the NPRM, with the exception of the definition of ''MU locomotive'', which will keep its existing definition as amended by FRA's Locomotive Event Recorder Rule, which was published subsequent to the NPRM. See 70 FR 37920 (June 30, 2005). FRA received one comment asking FRA to reconcile the potential conflict between the definition of ''MU locomotive'' proposed in the NPRM and the existing definition of ''MU locomotive'' contained in part 238. As the crashworthiness standards of this final rule do not apply to ''MU locomotives,'' FRA finds no need to further modify the existing ''MU locomotive'' definition. FRA will address the general issue of definitions related to MU locomotives in a forthcoming proposal originated by the Passenger Safety Working Group of the RSAC.

[6] PTC is a type of train control system containing modern processor-based technology that is defined by the protective functions that it provides. As a minimum, the core functions of a PTC system are: (1) Prevent train-to-train collisions (positive train separation), (2) enforce speed restrictions, including civil engineering restrictions (curves, bridges, etc.) and temporary slow orders, and (3) provide protection for roadway workers and their equipment operating under specific authorities. A PTC system can be classified into one of four levels of a system hierarchy depending on safety features or additional functions that it contains beyond the basic core functions.

[7] As used in this context, ''consist'' means the composition of a train.

The following terms have the same meaning as provided in part 238: ''corner post,'' ''lateral,'' ''locomotive cab,'' ''longitudinal,'' ''permanent deformation,'' ''power car,'' ''roof rail,'' ''semi-permanently coupled,'' ''Tier II,'' and ''ultimate strength.''

The term ''anti-climber'' is intended to have the same meaning as ''anti-climbing mechanism'' as it is used in part 238. The term ''anti-climber'' is used in place of ''anti-climbing mechanism'' to more accurately represent the name used in the rail industry.

The term ''collision post'' has essentially the same meaning as it is used in part 238; however, the definition is modified slightly in this final rule to narrow its application only to locomotives.

The term ''build date'' means the date on which the completed locomotive is actually shipped by the manufacturer or remanufacturer to the customer, or if the railroad manufactures or remanufactures the locomotive itself, the date on which the locomotive is released from the manufacture or remanufacture facility. In the NPRM, FRA asked for comment as to whether this definition accurately represents the industry's definition of ''build date.'' FRA received two comments addressing this issue. One commenter suggested that the Working Group revise the definition to reflect the date on which the locomotive is ready for delivery to a customer, regardless of when the customer actually takes delivery. However, another commenter suggested that the definition of ''build date'' remain unchanged. The Working Group discussed this issue and agreed with one of the commenters that the definition should remain unchanged. FRA agrees with the Working Group's recommendation based on the fact that the existing definition of ''build date'' will be simpler to apply uniformly to all affected parties. Subsequent to the RSAC providing recommendations on this final rule, FRA also added language to the definition to reflect what a build date for a locomotive would be if a railroad manufactured or remanufactured a locomotive itself. This addition captures the intent of the ''build date'' definition proposed in the NPRM and discussed by the Working Group, however, it contemplates the possibility that a railroad may manufacture or remanufacture its own locomotives.

The term ''designated service'' has the same meaning as provided in part 223.

The term ''design standard'' means a specification for the crashworthiness design of locomotives. This will usually contain a set of design requirements which do not specify ultimate performance, yet are not so specific in nature that they leave little flexibility to the designer. The overall design of the locomotive is allowed to vary, so long as the specified crashworthiness design requirements are met.

The term ''fuel tank, external'' differs slightly from the current part 238 definition and revises that definition by replacing the word ''volume'' with the word ''vessel.'' FRA believes that this is a more accurate and grammatically correct definition. In this rulemaking, FRA is also revising the current part 238 definition to mirror the definition in part 229.

The term ''fuel tank, internal'' differs slightly from the current part 238 definition and revises that definition by replacing the word ''volume'' with the word ''vessel.'' FRA believes that this is a more accurate and grammatically correct definition. In this rulemaking, FRA is also revising the current part 238 definition to mirror the definition in part 229.

FRA received one comment concerning the definitions of ''fuel tank, external'' and ''fuel tank, internal.'' This commenter agreed that the new definitions are ''more accurate and grammatically correct''; however, this commenter sought clarification as to what structural protection would be required for a fuel tank to be considered ''internal'' or within the ''car body structure.'' In response to this comment, FRA provides further clarification as to what is considered an ''internal'' fuel tank. A ''fuel tank, internal,'' as defined in this rule, is a fuel tank which ''does not extend outside the car body structure of the locomotive.'' In order to be considered ''internal,'' a fuel tank must be surrounded by more than just a minimally protective ''skin.'' The fuel tank must be surrounded by a more substantial structure and located within the support structure of the locomotive.

The term ''manufacture'' means the practice of producing a locomotive from new materials.

The term ''monocoque design locomotive'' means a locomotive in which the external skin or shell of the locomotive combines with the support frame to jointly provide structural support and stress resistance.

The term ''narrow-nose locomotive'' means a locomotive with a short hood which spans substantially less than the full width of the locomotive.

The term ''occupied service'' means any instance in which a locomotive is operated with a person present in the cab.

The term ''remanufacture'' means the practice of producing a ''remaufactured locomotive''.

As proposed, the term ''remanufactured locomotive'' means a locomotive rebuilt or refurbished from a previously used or refurbished underframe (''deck''), containing fewer than 25% previously used components (weighted by dollar value of the components). It is intended to capture the practice of decking a locomotive, or rebuilding it on a previously-used underframe. The proposed definition was intended to give better guidance to rebuilders of locomotives and railroads considering rebuilding a locomotive, and also to prevent avoidance of the proposed requirements by simply rebuilding a locomotive on a previously-used underframe containing less than 25% previously used components without making safety improvements.

FRA has already codified the term ''remanufactured locomotive'' in § 229.5, by including it as part of FRA's Locomotive Event Recorders Final Rule. 70 FR 37919. However, in response to the NPRM, three commenters requested additional clarification as to what constitutes a new locomotive for the purpose of determining applicability of the locomotive crashworthiness rulemaking. In general, commenters requested that FRA's locomotive crashworthiness rule provide more clarity and specificity to the methodology that should be used to calculate the 25%. One commenter noted that the definition of 25%, based on dollar value, does not specify the basis for comparison. Thus, FRA has provided further comparison requirements in the final rule's definition. The new definition adopted by this rule reads: ''[r]emanufactured locomotive means a locomotive rebuilt or refurbished from a previously used or refurbished underframe (deck), containing fewer than 25% previously used components (measured by dollar value of the components). For calculation purposes, the percentage of previously used components is determined with the equivalent value of new parts and is calculated using dollar values from the same year as the new parts used to remanufacture the locomotive.''

Another commenter noted that for all intents and purposes FRA's definition of a ''remanufactured locomotive'' is essentially equivalent to a new locomotive. This commenter also noted that this created a need for defining remanufactured (or rebuilt) locomotives where the percentage of previously used parts exceeds 25%. FRA agrees that there is a category or group of

locomotives that could be rebuilt or remanufactured that would not come under the requirements of this regulation. However, the regulation's design and/or structure does not demand that such a definition be added.

The term ''semi-monocoque design locomotive'' means a locomotive in which the external skin or shell of the locomotive partially combines with the support frame to provide structural support and stress resistance.

The term ''short hood'' means the part of the locomotive above the underframe located between the cab and the nearest end of the locomotive. Short hoods may vary in length and are usually, but not always, located toward the front-facing portion of the locomotive.

The term ''standards body'' means an industry and/or professional organization or association which conducts research and develops and/or issues policies, criteria, principles, and standards related to the rail industry.

The term ''wide-nose locomotive'' means a locomotive used in revenue service which is not of narrow-nose or monocoque or semi-monocoque design.

Subpart D—Locomotive Crashworthiness Design Requirements

Section 229.201 Purpose and Scope

Paragraph (a) provides that the purpose of the final rule is to help protect locomotive cab occupants in the event of a collision with another locomotive, on-track equipment, or with any of several types of objects which may foul railroad trackage. Paragraph (b) provides that this subpart sets forth standards for the design of crashworthy locomotives. It is important to note that these standards will not protect all occupants in all collision situations; rather, this rule calls for design improvements in areas which FRA believes will have the greatest effect on the reduction of cab crew injuries and fatalities associated with the most prevalent types of locomotive collisions. There were no comments regarding this provision and it is, therefore, unchanged in this final rule.

Section 229.203 Applicability

Paragraph (a) states that the requirements of this subpart apply to all locomotives manufactured or remanufactured on or after January 1, 2009. The only locomotives exempt from these requirements are those specifically listed in paragraphs (b) and (c). The AAR S–580–2005 applies to locomotives manufactured after December 31, 2008. FRA determined that it would be prudent to coordinate implementation of the rule with the effective date of the AAR–S–580–2005 to avoid any confusion. FRA utilizes the locomotive build date in calculating the exemption of the current locomotive fleet from requirements of this final rule. The entire current locomotive fleet would therefore not be subject to the requirements of this final rule, other than for the rebuilt and remanufactured requirements discussed below. FRA believes that approximately three years will be sufficient to allow manufacturers to re-engineer and re-tool in order to comply with these new standards and has specified this paragraph's applicability date accordingly, particularly since the revised S–580 standard was published by the AAR by circular dated February 7, 2005.

This paragraph further applies to remanufactured locomotives, as defined in § 229.5. FRA believes that the practice of ''decking'' a locomotive (stripping a locomotive to its underframe, or deck, and refurbishing it with new components) essentially creates a new locomotive. Since the useful life of a decked locomotive is practically the same as a newly built locomotive, FRA believes it should be subject to these new requirements. However, these new requirements are not intended to apply to locomotives undergoing periodic maintenance or a major overhaul not involving ''decking.'' Most large railroads perform a major overhaul after about 9–12 years, replacing or servicing many components, but not ''decking'' it. See also Major Issue (b), ''Application to new locomotives.''

FRA anticipates that the calculation of the percentage of previously used parts should not only be performed with the equivalent value of new parts, but also utilizing dollars from the same year as the new parts. In other words, if the value of the new parts is calculated using parts purchased in 2008, then the value of the previously used components is also calculated using 2008 prices of equivalent new parts. If it is not possible to provide the cost of an equivalent new part, then the cost for the most similar part should be used.

For example, if the only part being reused for the production of a new locomotive is the underframe and the equivalent value of a new underframe is 15% of the cost of the locomotive, then for purposes of this regulation this locomotive would be considered a ''remanufactured'' locomotive and would be required to meet these crashworthiness requirements. This example's calculation would be:

[Cost of Equivalent New Underframe Comparable to Reused Underframe/ ($ Cost of Equivalent new Underframe Comparable to Reused Underframe + $ Cost of New Parts) = 0.15].

However, if there were ten parts being reused, including the underframe, and the equivalent value of new parts represents 30% of the cost of the locomotive, then for purposes of this regulation this locomotive would not be considered remanufactured and would not come under these requirements. This example's calculation would be:

[Cost of Equivalent New Parts Comparable to the 10 Reused Parts/ (Cost of Equivalent New Parts Comparable to the 10 reused parts + Cost of New Parts) = 0.30].

FRA believes this definition and requirement recognize that a locomotive comprises a number of parts, principally the chassis, prime mover, main generator, trucks, traction motors and electrical system. FRA also realizes that each railroad derives its own best method of determining when overhauls must be performed. Some use mileage, some use hours, and some use more subjective factors. While the need for this work on a cyclical basis is a given, the manner in which it is conducted varies from railroad to railroad.

FRA recognizes that some railroads conduct the overhaul on a preventative basis, component by component, at the same time as routine repairs and maintenance are performed. Others conduct the locomotive overhaul on a planned cycle using the wear of the engine component as the determinant, and still others follow a ''run to failure'' approach.

Paragraph (b) excludes from application of this rule passenger cab cars, or MU and DMU cars, and semi-permanently coupled power cars built for passenger service. These types of locomotives are subject to the requirements of part 238.

Paragraph (c) excludes from application of most provisions of this rule locomotives used in designated service. This includes locomotives without occupant cabs and also locomotives referred to as ''slugs.'' On these locomotives the cab doors have been welded shut or otherwise secured to a similar extent so that crews cannot occupy the cab. The designated service classification is intended to mirror its application in FRA's Safety Glazing Standards at § 223.5. Locomotives used in designated service are still subject to the fuel tank requirements in § 229.217. FRA mandates this requirement because it has found that locomotive fuel tank ruptures place at risk the environment and all persons within the local area of the collision site. Since locomotives

used in designated service may still be used as power in a consist, FRA is concerned that any fuel tank rupture on one of these locomotives would pose a safety risk at least equivalent to that from other road locomotives. Therefore, all new locomotives are required to comply with this fuel tank requirement.

There were no comments it is, therefore, unchanged in this final rule.

Section 229.205 General Requirements

Paragraph (a) of this section requires the design of all locomotives subject to this subpart, except monocoque or semi-monocoque design locomotives and narrow-nose locomotives, to meet the performance criteria in Appendix E (hereafter referred to as ''wide-nose design locomotives''). All wide-nose design locomotives must comply with the requirements of Appendix E; however, the manufacturers or remanufacturers of these locomotives are given options as to how they demonstrate their compliance. Compliance with the performance criteria must be satisfied by complying with any one of the three options provided.

One commenter was concerned that these three options do not provide the option of performing full-scale collision tests or analysis, as defined in Appendix E. FRA wants to clarify that these three options are simply a means of demonstrating that a design meets the performance standards in Appendix E. A manufacturer or remanufacturer could, in theory, also demonstrate compliance with Appendix E by conducting full-scale collision tests for a particular locomotive design, but the three options in § 229.205 (a) provide a less costly means of compliance.

In paragraph (a)(1), FRA has provided a model design standard, AAR S–580–2005, which FRA has found to satisfy the performance standard in Appendix E. This paragraph references that AAR standard's criteria for wide-nose locomotives, which has been analyzed in cooperation with the RSAC and found to satisfy the intent of the performance criteria. FRA does not require compliance with this standard as to wide-nose locomotives; rather, it is being provided simply as a design standard that FRA has already found to satisfy the performance requirements of Appendix E. Providing an available design standard aids the locomotive original equipment manufacturers (OEMs) by making it unnecessary for them to conduct elaborate analysis of new designs to establish compliance with the performance standards. Representatives of two OEMs that participated throughout development of the NPRM in the RSAC embraced this approach and found it very cost effective. Paragraph (a)(2) allows compliance with FRA-approved new crashworthiness design standards or changes to existing crashworthiness design standards. Finally, in paragraph (a)(3), FRA provides the option of meeting an FRA-approved alternative crashworthiness design. The procedures for seeking such approval of new or revised standards or alternative designs are provided in §§ 229.207 and 229.209.

Paragraph (b) requires that monocoque and semi-monocoque design locomotives comply with the elements of the new AAR standard applicable to those types of locomotives. Typically used in passenger service, monocoque/semi-monocoque locomotives provide occupant protection in a different manner than wide-nose locomotives. Specifically, because much of the longitudinal strength of the locomotive is provided by the side panels of the unit (and potentially the roof) as well as the underframe, the front of a monocoque or semi-monocoque locomotive performs as an integral unit and resists collapse very effectively. By contrast, the wide-nose locomotive, which has relatively little strength above the underframe, is made safer by strengthening the short hood and allowing it to absorb energy as it collapses when subjected to higher forces. Allowing a similar amount of crush in the case of the monocoque/semi-monocoque design would result in an almost complete loss of the cab volume. The RSAC Working Group reviewed the accident history of monocoque/semi-monocoque locomotives already in service that meet the new standard as built and found that they appear to be at least as safe as wide-nose locomotives enhanced to meet the new AAR standard and Appendix E of this final rule. Existing manufacturers of this type of locomotive have indicated that they believe the new AAR standard is very reasonable and should be effective in ensuring that locomotives of this type are built to protect cab occupants.

As the recommended text of the NPRM was being circulated for final ballot within the RSAC Working Group, a supplier member of APTA, which builds locomotives for commuter railroads, noted the existence of the APTA standards, APTA SS–C & S–034, for monocoque/semi-monocoque passenger locomotives. A copy of this standard has been placed in the docket of this rulemaking as Document No. FRA–2004–17645–17. In the NPRM, FRA solicited comments regarding whether the final rule should recognize this existing APTA standard as an additional option for compliance.

Two commenters responded, and both believed that this APTA standard provided an equivalent level of safety as the crashworthiness standard contained in this final rule. One commenter expressed support for adopting APTA SS–C & S–034 as a compliant design option. The other commenter, however, did not believe that adoption of this standard was appropriate. This commenter believed that APTA SS–C & S–034 contained additional requirements, not contained in this final rule, which would create an undue additional regulatory burden.

The Working Group analyzed and discussed these comments and recommended that FRA not adopt APTA SS–C & S–034 as an equivalent crashworthiness standard. Through discussions at the last Working Group meeting, FRA learned that APTA intends to phase out its standards for non-passenger carrying locomotives. In light of this, and the fact that this APTA standard has not been fully evaluated in relation to the final rule's standards, FRA adopts the Working Group's recommendation.

One commenter also suggested that § 229.205(b) be modified to clarify that locomotives built to the structural requirements contained in §§ 238.405, 238.409 and 238.411 also meet the minimum locomotive crashworthiness requirements for monocoque and semi-monocoque designs. FRA agrees that the end strength provisions in part 238 for Tier II locomotives provide equivalent safety standards for structural design as the basic cab car, MU or DMU design standards set forth in this regulation. FRA also agrees that the end strength provisions in part 238 for Tier II locomotives require an equivalent level of crashworthiness as § 229.205(b). FRA is, therefore, providing the option of complying with the standards in §§ 238.405(a), 238.409 and 238.411, in lieu of complying with the end strength provisions for Tier I locomotives in this rule. (Tier I means operating at speeds not exceeding 125 mph, as defined in part 238). All of the cited provisions must be met in order for this alternative to apply, since the ''safety cage'' concept embodied in the Tier II rule depends on the presence of all elements.

Paragraph (c) requires that narrow-nose design locomotives be built to the requirements of the new AAR standard for that type of locomotive. The RSAC Working Group considered the need for a suitable standard to address locomotives used frequently to make up trains and pick up and set out cars. Presently, older narrow-nose

locomotives are preferred for this type of work because they provide a better field of view for the engineer. FRA agreed that the safety of ground personnel, and avoidance of train accidents involving fouling equipment and misaligned switches, would be best served by allowing that narrow-nosed locomotives be built to a less stringent standard. Accordingly, protection of the cab under the new AAR standard will be significantly better than existing narrow-nose units (through strengthening of the short hood structure and the addition of corner post requirements for the cab itself), but not as robust as required for wide-nose locomotives.

One commenter expressed concern that these crashworthiness standards are not feasible for implementation in a ''narrow cab'' design. Specifically, this commenter suggested that the Working Group eliminate the ''corner post'' requirement for narrow-nose locomotives intended primarily for yard and limited over-road service. The Working Group reviewed this comment and recommended that the ''corner post'' requirements remain in the final rule as they are feasible and do provide a safety benefit for narrow-nose locomotives. FRA agrees and adopts the Working Group's recommendation.

It should be noted that the final rule (see §§ 229.207, 229.209) allows the qualification of monocoque/semi-monocoque and narrow-nose locomotives using alternative standards and approved designs. However, unlike the situation for all other locomotives, neither Appendix E nor any other portion of the rule spells out precisely how the case for safety equivalence would be made. This is in part because FRA research and RSAC Working Group attention focused on the principal opportunity for safety advances through the improvement of wide-nose design locomotives (by far the largest category of new locomotives built in the last decade and under order today). Further, as noted above, existing monocoque/semi-monocoque designs have performed admirably; and design choices for the narrow-nose are seriously limited due to functional requirements.

At the time of the publication of the NPRM, the scope of AAR S–580–2004 varied slightly from that of the proposed rule. Specifically, in section ''1.0 Scope'' of AAR S–580–2004, ''road switcher/intermediate service locomotives'' were exempt from meeting the AAR design standard. However, ''road switcher/intermediate service locomotives'' were required to meet the performance standards of the NPRM. One commenter pointed out this apparent discrepancy between the NPRM and AAR S–580–2004. However, since the publication of the NPRM, this variation between the AAR standard and FRA's rule has been remedied. The new AAR S–580–2005, a copy of which has been placed in the docket of this proceeding, no longer exempts ''road switcher/intermediate service locomotives'' from its standard. AAR S–580–2005 and this final rule now both require ''road switcher/intermediate service locomotives'' to meet these crashworthiness standards.

Section 229.206 Design Requirements

This section requires all locomotives subject to this subpart to include anti-climbers, methods of emergency egress, and emergency interior lighting designed in compliance with the crashworthiness requirements contained in AAR S–580–2005.

AAR S–580–2005 requires that the cab end of a locomotive must incorporate an anticlimber of a specified width, depth, and design to resist an upward or downward vertical force of 100,000 pounds, applied over any 12 inches of the anticlimber, without exceeding the ultimate strength of the anticlimber or its connector. The Working Group understood, and FRA agrees, that the forces generated between two colliding locomotives are of sufficient magnitude that the anticlimber will most likely crush and absorb some energy. The most likely scenario where the anticlimber can prevent intrusion into the occupied cab area is in collisions at grade crossings when a highway vehicle struck by a locomotive may try to climb up and the motions and forces generated are resisted by the anticlimber. One commenter suggested that the anti-climber requirement in the AAR S–580–2005 be changed to 100,000 pounds without permanent deformation for consistency with the requirements in § 238.205(a). Section 238.205(a) actually refers to withstanding ''an upward or downward vertical force without failure,'' so no change is needed to achieve consistency. The commenter also recommended retaining the proposed § 229.206 and deleting § 238.205(b). FRA agrees that maintaining different standards for application to conventional locomotives is inappropriate, and in conformity with the stated intention to address locomotive crashworthiness requirements in part 229 as much as possible, FRA has added a sentence to § 238.205(b) making it clear that anti-climbing arrangements for locomotives built under the new subpart D to part 229 are governed by § 229.206, rather than by § 238.205(b).

AAR S–580–2005 requires that the locomotive cab allow for exit through at least one opening in any locomotive orientation. The Working Group faced the problem that research in this area is lacking. However, the problem is well-defined: when the locomotive lies on its side after a collision, the occupants may have trouble reaching a door that is not obstructed, especially if they are injured. The Working Group therefore made some general recommendations for the design of cabs to incorporate adequate means of emergency egress. FRA has adopted these recommendations. FRA has also funded development of three alternative types of egress mechanisms, any one or more of which may be used to satisfy the requirements. One commenter suggested that either the AAR S–580 or § 229.206 be modified to require emergency egress for all locomotives, not just wide-nose locomotives. The AAR S–580–2005 has been updated to make emergency egress requirements applicable to all locomotives.

AAR S–580–2005 requires the placement of, and specifies illumination levels for, locomotive cab emergency lighting. These requirements are similar to those required for passenger equipment in § 238.115, except that the required duration for lighting levels in freight locomotive cabs is less, to reflect the design distinction between the two types of equipment. Passenger equipment generally has use of an auxiliary power source, making it more convenient to provide ample power when needed. Most freight locomotives have only one power source and its reliability is important for powering the prime mover. Further, FRA sees locomotive crew members as being more familiar with the smaller layout of a freight locomotive cab and emergency lighting capabilities therein than the average passenger traveling in passenger equipment subject to part 238.

FRA received two comments concerning emergency lighting. One commenter recommended that FRA remove the locomotive cab emergency lighting requirement from the final rule. The commenter argued that the emergency lighting requirements are not necessary due to the relatively small size of freight locomotive cabs, the high level of familiarity of their occupants with emergency procedures, the location of emergency exits, and the non-trivial ergonomic and design challenges for relatively little or no increase of safety. The emergency lighting requirement has been researched and discussed in detail by

the Working Group. Providing the situational awareness following a serious but survivable crash may be critical to safe evacuation of the crew. In the interest of safety, the Working Group and FRA both believe that this requirement should remain a part of this final rule. The other commenter suggested that either the AAR S–580 or § 229.206 be modified to require emergency lighting for all locomotives, not just wide-nose locomotives. The AAR S–580–2005 has been updated to make emergency lighting requirements applicable to all locomotives.

AAR S–580–2005 provides general design requirements for the interior configuration of a locomotive cab. In order to minimize the chance of injury to occupants, protruding parts, sharp edges, and corners in the locomotive cab must be rounded, radiused, or padded. These requirements are similar to those covering passenger equipment in § 238.233(e), and the language used is very similar.

AAR S–580–2005 provides design requirements for locomotive cab appurtenance (including cab seat) securement. The Working Group formulated these requirements based on manufacturer testing and its collective, general experience with locomotive collisions. FRA expects that testing methods to determine compliance with this requirement will be state of the art. Testing should demonstrate that the mountings, including cab seat mountings, meet the strength requirements without permanent deformation. Localized deformation may be acceptable for compliance purposes with this section.

The disparities in these cab seat securement requirements from those currently required by §§ 238.233(f) and (g) for passenger equipment are due solely to the difference in how compliance is measured. In § 238.233, seat mountings must withstand forces of 8.0 g longitudinal, 4.0 g lateral, and 4.0 g vertical without ultimate failure of the connection. This rule requires that locomotives comply with the AAR S–580–2005, which requires that all appurtenances/mountings withstand forces of 3.0 g longitudinal, 1.5 g lateral, and 2.0 g vertical without permanent deformation, as defined in § 229.5.

The Working Group believes that, given current designs, all appurtenances and mountings which comply with § 238.233 requirements would most likely meet these requirements and vice versa. FRA agrees. However, FRA also agrees with the commenter that suggested that FRA amend § 238.233(f) to avoid having different requirements for the same issue in two different regulations for seat attachment. FRA has not deleted this provision, which is required to govern existing locomotive construction; however, FRA has clarified that § 229.206 applies to locomotives required to be built under the new subpart D of part 229 as it takes effect on January 1, 2009.

One commenter also suggested that either the AAR S–580 or § 229.206 be modified to require interior configuration requirements for all locomotives, not just wide-nose locomotives. The AAR S–580–2005 has been updated to make interior configuration requirements applicable to all locomotives.

FRA did not need to amend the regulatory text to this section to address the comments it received, therefore, this provision is unchanged in this final rule.

Section 229.207 New Locomotive Crashworthiness Design Standards and Changes to Existing FRA-Approved Locomotive Crashworthiness Design Standards

This section provides procedures to be followed when seeking FRA approval of new locomotive crashworthiness design standards. It also covers procedures for obtaining FRA approval of changes to existing standards which FRA has already approved. These procedures are similar to approval procedures currently used by FRA in other contexts. See, for example, § 238.21.

FRA envisions the possibility that other industry groups, such as passenger locomotive manufacturers, might desire a separate design standard from AAR S–580–2005. This section outlines the procedures to be used to obtain FRA approval for such a design standard. FRA recognizes that considerable expense could be required to validate a new design standard with respect to the performance criteria in Appendix E. Thus, FRA does not expect that submission of petitions for new locomotive crashworthiness design standards will be an ordinary occurrence.

However, FRA does foresee a need for flexibility with approved standards to enable industry standards bodies to suggest often highly technical changes to a previously-approved design standard without incurring delays inevitably invoked by the Federal administrative review process. This section sets two levels of FRA scrutiny, depending on the degree of change to the previously-approved standard. The lowest level of scrutiny is involved when non-substantive changes are involved. See paragraph (d) of this section. A higher level of scrutiny would be required when substantive changes are involved. However, since most of these changes are likely to be incremental in nature, FRA only requires evidence that the resulting standard still satisfies the performance criteria by showing an equivalent or better level of safety. See paragraph (c) of this section.

Paragraph (a) explains the purpose of this section. This section provides the procedures that must be followed by parties seeking approval of new crashworthiness design standards and changes to existing FRA-approved crashworthiness design standards. This paragraph also limits those who may seek approval of changes to existing FRA-approved crashworthiness design standards. Only a standards body which has adopted an FRA-approved design standard may request to change that standard. FRA has imposed this limitation in order to prevent parties who have no stake in a design standard from seeking to impose changes to it. A party seeking changes to a design standard that has not been approved by FRA should follow the procedures for approval of new design standards, paragraph (b), or the procedures for approval of alternative design standards provided in § 229.209.

Paragraph (b) specifies submission procedures for petitions for new design standards. Each petition must be submitted to the FRA Associate Administrator for Safety and be titled ''Petition for FRA Approval of a New Locomotive Crashworthiness Design Standard.'' Paragraphs (b)(1) and (b)(2) require the petition to contain contact information for a representative of the petitioner and the proposed design standard in detail. Along with the proposed design standard, FRA needs to understand the intended type of use of the locomotive sought to be built by a petitioner. Paragraph (b)(3) requires this information. Paragraph (b)(4) requires the petition to contain data and analysis showing how the proposed design standard satisfies the performance requirements in Appendix E. Examples of the types of data and analysis required are provided in § 229.211(c)(1).

Paragraph (c) deals with substantive changes to an FRA-approved design standard. Each petition must be submitted to the FRA Associate Administrator for Safety and be titled ''Petition for FRA Approval of Changes to a Locomotive Crashworthiness Design Standard.'' Paragraphs (c)(1) and (c)(2) require the petition to contain contact information for a representative of the petitioner and the proposed change in detail. Along with the proposed change,

FRA needs to understand the intended type of use of the locomotive sought to be built by a petitioner. Paragraph (c)(3) requires this information. These substantive changes, defined as all other changes not covered by paragraph (d) (non-substantive changes), would likely result in a change to the design standard which might call into question its compliance with the performance criteria of Appendix E or equivalence to the applicable technical standard. For these types of changes, FRA requires, in paragraph (c)(4), validation that the resulting standard still satisfies the requirements stated in § 229.205. Types of validation which FRA will consider appropriate are described in § 229.211(c)(1).

Paragraph (d) specifies procedures for obtaining FRA approval of non-substantive changes to existing FRA-approved design standards. Each petition must be submitted to the FRA Associate Administrator for Safety and be titled ''Petition for FRA Approval of Non-substantive Changes to a Locomotive Crashworthiness Design Standard.'' Paragraphs (d)(1) and (d)(2) require the petition to contain contact information for a representative of the petitioner and the proposed change in detail. FRA believes that these non-substantive changes will usually be editorial, procedural, or interpretive in nature, requiring a relatively low level of FRA scrutiny. FRA understands such changes could be necessary in order for standards bodies to effectively carry out their duties. Paragraph (d)(3) requires a detailed explanation of how the proposed change is non-substantive. FRA will make an initial determination whether the proposed change is non-substantive. If FRA determines that the proposed change is in fact substantive, FRA will process the petition as a substantive proposed change in accordance with paragraph (c) of this section. If FRA determines that the proposed change is non-substantive, FRA will process the petition in accordance with § 229.211(c).

There were no comments regarding this provision and it is, therefore, unchanged in this final rule.

Section 229.209 Alternative Locomotive Crashworthiness Designs

This section provides procedures to be followed when seeking FRA approval of an alternative locomotive crashworthiness design. These procedures are similar to approval procedures currently used by FRA in other contexts. See, for example, § 238.21.

FRA envisions the possibility that a railroad or locomotive manufacturer will desire to explore innovative locomotive designs which do not satisfy AAR S–580–2005 or any other current FRA-approved design standard. In such case, FRA has provided a procedure in this section whereby it would assess the design directly against the performance criteria of Appendix E. This section outlines the procedures to be used to obtain FRA approval for such a design. FRA recognizes that considerable expense could be required to validate an alternative design with respect to the performance criteria in Appendix E. However, the state of the art of validation techniques is evolving, and FRA does not find it far-fetched that the expenses associated with validation processes today will decrease. Overall, FRA expects that submission of petitions for alternative locomotive crashworthiness designs will be a rare occurrence.

FRA also understands that the market for locomotives is very much customer-driven and that railroads of all sizes require a great degree of operational flexibility. Thus, FRA assumes that a locomotive capable of performing road-haul service will at some point be called upon to perform such service. Since the performance criteria are objectives designed for road-haul service locomotives, FRA contemplates approval of design standards and alternative designs not meeting the performance criteria or applicable technical standard only under a waiver proceeding (see part 211, subpart c). In such a proceeding, FRA would expect the petitioner to demonstrate that (1) service conditions will not approximate assumptions used for performance criteria (i.e, locomotive cannot possibly be used for road-haul service), and (2) adequate design restrictions on use will reinforce those assumptions. For example, appropriate restrictions on a locomotive's horsepower guarantee that it cannot effectively be used as a road-haul locomotive.

Paragraph (a) explains the purpose of this section. This section contains procedures which govern locomotive designs which are truly innovative and unconventional. Manufacturers or railroads will most likely use the procedures in this section to gain FRA approval, rather than attempt to fit within an already-established design standard or alter an existing design standard. FRA believes that builders/railroads should not necessarily be forced to work with existing standards, should they be willing to have validated the safety features of their design against the performance criteria of Appendix E (or equivalence to the applicable technical standard).

Paragraph (b) specifies submission procedures for petitions for alternative locomotive crashworthiness designs. Each petition must be submitted to the FRA Associate Administrator for Safety and be titled ''Petition for FRA Approval of Alternative Locomotive Crashworthiness Design.'' Paragraphs (b)(1) and (b)(2) require the petition to contain contact information for a representative of the petitioner and the proposed design in detail. Paragraph (b)(3) requires that, along with the proposed alternative design, the petitioner also specify the type of service to which the locomotive will be put. FRA needs to understand the intended type of use to appreciate the probable collision risks to which the locomotive will be subjected. Paragraph (b)(4) requires the petition to contain data and analysis showing how the proposed design standard satisfies the performance requirements in Appendix E or is equivalent in protection of cab occupants (in the case of narrow-nose or monocoque/semi-monocoque designs) to the applicable technical standard. Examples of the types of data and analysis required are provided in § 229.211(c)(1).

There were no comments regarding this provision and it is, therefore, unchanged in this final rule.

Section 229.211 Processing of Petitions

This section outlines the procedures that FRA will follow in reaching a decision on petitions submitted under § 229.207(b) (petitions for approval of new design standards); § 229.207(c) (petitions for approval of substantive changes to an approved design standard); and § 229.209(b) (petitions for approval of alternative design standards).

Paragraph (a) provides that FRA publish a notice in the **Federal Register** for each petition received seeking approval of new or alternative crashworthiness designs or substantive changes to existing crashworthiness designs. This is to notify interested parties of the pending FRA action.

Paragraph (b) provides procedures for interested parties to comment on any petitions submitted to FRA pursuant to this section. FRA is aware that changes in design of conventional locomotives might impact the safety of locomotive crews and other railroad employees. Therefore, this paragraph provides such parties the opportunity to comment. Further, FRA welcomes comments in electronic form as well as in written form. If FRA determines that additional information is required to appropriately consider the petition, FRA will conduct

a hearing on the petition. Notice of such hearing will provided in the **Federal Register**. Procedures for the conduct of such hearing will be in accord with § 211.25.

Paragraph (c) addresses FRA action on petitions submitted for FRA approval pursuant to §§ 229.207(b), 229.207(c), and 229.209.

Paragraph (c)(1) describes the types of validation techniques required for FRA approval of design standards, changes to design standards, and alternative locomotive crashworthiness designs. FRA provides several validation methods which it considers satisfactory. FRA is aware of the basic types of modeling and testing of locomotive design standards, as well as the relative costs associated with these processes. Any validation technique considered to be state-of-the-art, or generally acceptable within the scientific community, should suffice for purposes of this paragraph, whether it be computer software modeling or full-scale crash testing of locomotives. FRA does realize that technological and market changes may make modeling and/or testing methods more or less cost-effective, and would thus require validation to such an extent as reasonably practicable. Finally, in order to facilitate and expedite the approval process, FRA would encourage effective peer review of submitted standards prior to submission.

For locomotives subject to paragraph (a) of § 229.205, where solely incremental changes are being introduced to a previously approved design standard, FRA does not require proof of satisfaction of all Appendix E performance requirements. In this case, FRA would require submission of validation material for only those areas affected by the changes. FRA feels that to require full satisfaction of the Appendix E performance criteria would be too great a burden and would simply result in the requirement that subsequent petitioners ''reinvent the wheel'' in areas where it has already been invented.

In the event that a truly innovative alternative design is submitted for FRA approval (*i.e.*, not close to satisfying a previously-approved design standard), FRA would require full validation of its crashworthiness per Appendix E. However, if a proposed alternative design varies only slightly from a previously-approved design standard, FRA would require only validation of those features which are different, in lieu of proof of satisfaction of all Appendix E performance criteria. Designers ought to be able to take advantage of prior safety validation efforts on conventional designs (reflected in FRA-approved design standards). Thus, when an alternative locomotive design approaches that of a previously-approved design standard, FRA would prefer that validation efforts be focused on areas where the alternative design takes a different approach from the approved design standard. FRA envisions validation of such alternative designs to be demonstrated through competent engineering analysis which compares the new alternative design to that of an approved design or design standard and demonstrates an equal or better performance. As detailed in Appendix E, the primary performance measure to be evaluated is crush distance. Crush distance restrictions are utilized in order to determine compliance with the goal of preventing intrusion into the occupied cab space.

FRA made one small change to this section by deleting the last sentence from paragraph (c)(1) because FRA anticipates that some of the petitions that will be submitted will show the petitioner's conformance with a relevant design standard (*e.g.*, semi-monocoque or narrow-nosed) rather than conformance with Appendix E.

In paragraphs (c)(2) and (c)(3), FRA establishes a 90-day goal for disposition of a petition under this section, due to the technical review which may be required. It should be noted that 90 days is only a target goal. FRA will take more than 90 days to reach a decision if warranted. FRA will grant a petition only if it finds that the proposed design standard or change to an existing design standard satisfies the performance standards specified in Appendix E or provides a level of safety at least equivalent to the recognized technical standard (in the case of narrow-nose or monocoque/semi-monocoque designs). FRA will deny a petition if it determines that the proposed design standard or change to an existing design standard does not satisfy the performance standards specified in Appendix E or is not equivalent in safety (as applicable). FRA will also deny a petition if it determines that the petition does not meet the procedural requirements of §§ 229.207 and 229.209.

Paragraph (c)(3) also contains a provision allowing petitions which have been denied to be re-opened for cause. For example, FRA might re-open consideration of a petition for an alternative locomotive crashworthiness design if a specific locomotive collision risk had been significantly affected by factors (*i.e.*, elimination of highway-rail at-grade crossings or adjacent parallel track) not present during the initial consideration of the petition.

Finally, paragraph (c)(4) states that FRA will send copies of its written decision to all parties to the petition and will also place its decision in the docket for that petition. FRA believes that it is more accurate to refer to placing the decision in the docket for the petition, as opposed to the docket ''of this proceeding'', as was proposed in the NPRM. FRA may also post its decision on its Web site, *www.fra.dot.gov.*

There were no comments regarding this provision and it is, therefore, unchanged in this final rule.

Section 229.213 Locomotive Manufacturing Information

Paragraph (a) of this section requires each railroad operating a railroad subject to this subpart to retain the date upon which the locomotive was manufactured or remanufactured, the name of the manufacturer or remanufacturer, and the design specifications to which the locomotive was manufactured or remanufactured.

Paragraph (b) provides that the information required by paragraph (a) must be located permanently in the locomotive cab (*i.e.*, a plaque or plate affixed to the inside of the cab) or provided within two business days upon request of FRA or an FRA-certified State inspector. This requirement would provide a means by which it can be rapidly determined whether a locomotive is subject to the requirements of this rule.

A related issue of locomotive identification of safety features is communication of these features to crews. The benefits of this rule may not be fully realized if the occupants of the locomotive are not made aware of the fact that the locomotive has crashworthiness design features and of the specific safety features incorporated in the locomotive design. Consequently, FRA believes it is imperative that this information be communicated to locomotive cab occupants. At the same time FRA recognizes that the safety improvements contained in this rule are incremental in nature and that, ultimately, crew members faced with an imminent hazard will need to make their own decisions as to whether to remain in the locomotive. Commenters were asked to specifically address whether any particular method of identification ought be used so as to promote uniformity, or whether carriers should be required to simply identify the locomotive with the appropriate information by any reasonable means, such training of crews. One commenter suggested that FRA afford railroads

discretion as to how to train or inform their crews and that FRA not issue regulation to address this issue. FRA agrees with the RSAC Working Group that railroads and labor organizations should determine how best to deliver this information to employees, which could include articles in organization periodicals, special notices, decals, inclusion in training curricula, or other means of conveying the information.

Section 229.215 Retention and Inspection of Designs

Paragraph (a) provides a requirement that locomotive manufacturers and remanufacturers maintain crashworthiness designs for those locomotives subject to subpart D. This requirement is designed to ensure that compliance with the requirements of this subpart can be readily determined in the event that a locomotive's compliance with its design or performance standard is called into question. It is also meant to ensure that the relevant designs are available in the event a locomotive subject to this subpart is modified or repaired. FRA believes these records should be available so that any repairs or modifications made to the locomotives do not compromise the crashworthiness features to such an extent that they are no longer in compliance with the final rule.

The requirement that these records be maintained for the life of the locomotive is limited to a 20-year term, which approximates the normal period an initial owner would typically retain control of the unit. As further specified below, the 20-year term runs from the date that a locomotive is manufactured. In the case of a remanufactured locomotive, the 20-year term begins anew on its date of remanufacture. For the purposes of this regulation, the manufacture and remanufacture dates are determined by the date a locomotive is shipped by the manufacturer or remanufacturer to the customer. In concluding this rulemaking, FRA has noted that the retention period as proposed would literally expire upon the occurrence of an accident/incident leading to the destruction of the locomotive, perhaps making the records unavailable to FRA or NTSB at the very time they would be most needed. The final rule corrects this oversight, providing for retention of the records of one year following the event.

Paragraph (b) requires that all records of repairs or modifications to crashworthiness features of a locomotive subject to this subpart be kept by the owner or lessee of the locomotive. These records must also be maintained for the life cycle of the locomotive, up to a period of 20 years from the date these repairs/modifications are made. In concluding this rulemaking, FRA has noted that the retention period as proposed would literally expire upon the occurrence of an accident/incident leading to the destruction of the locomotive, perhaps making the records unavailable to FRA or NTSB at the very time they would be most needed. The final rule corrects this oversight, providing for retention of the records of one year following the event. Under this paragraph, transfer of ownership of a locomotive does not relieve the transferor of responsibility to maintain the repair/modification records. The railroad would be relieved of its responsibility to maintain the repair/modification records after the earlier of a 20-year period or when the locomotive is permanently retired from service. In the NPRM, FRA invited comments from small railroads regarding this issue, since FRA is aware that many smaller railroads obtain locomotives from larger railroads, rather than purchasing new from the manufacturer. FRA did not receive any comments concerning this issue.

Paragraph (c) outlines the basic procedure for inspection of locomotive designs. FRA, or FRA-certified State inspectors, will request to view designs for specified locomotives, and the railroad will comply by making the designs available for inspection and photocopying by FRA, or FRA-certified State inspectors, within 7 days. FRA believes that this provision is essential to its ability to ensure compliance with paragraphs (a) and (b) of this section.

FRA understands that railroads may not perform the actual repairs/modifications or possess the actual designs themselves, but rather would have them stored by a third party such as the AAR, the leasing company, or even the manufacturer. Paragraph (d) allows the records to be maintained by third parties; however, the manufacturers, remanufacturers, owners, and lessees of locomotives subject to this subpart will remain responsible for compliance with this section.

Section 229.217 Fuel Tank

Paragraph (a) provides that locomotives equipped with external fuel tanks meet the October 1, 2001 version of AAR Standard S–5506 requirement for external fuel tanks, with the exception of Section 4.4 as noted below. That version of AAR S–5506 has been placed in the docket of this proceeding. These requirements were formerly classified as an AAR Recommended Practice, RP–506. RP–506 became effective on June 1, 1995. Only preliminary observations of its effect have been made. Data from FRA accident records has shown that RP–506 has had a positive effect on the performance of fuel tanks in locomotive collisions and derailments. The NTSB in NTSB Report #PB92–917009 on fuel tank integrity has accepted RP–506 as a means to mitigate fuel tank breaches (a copy of the report has been placed in the docket of this proceeding). On October 1, 2001, AAR S–5506 was adopted as an AAR standard.

Section 238.223(a) requires that passenger locomotives with external fuel tanks comply with a similar version of S–5506. As FRA decided in the Passenger Equipment Safety Standards final rule (64 FR 25651–25652 (May 12, 1999)), to omit one of the provisions of RP–506 (now S–5506) since it does not appear to be a safety standard, but rather a fueling requirement; this provision is intentionally omitted here as well. This provision, Section 4.4 (''Fueling'') of S–5506, states that ''[i]nternal structures of [the] tank must not impede the flow of fuel through the tank while fueling at a rate of 300 gpm [gallons per minute].'' FRA does not consider fueling rates to be a safety concern, but rather an operational consideration; therefore, section 4.4 has not been included.

One commenter suggested that FRA delete Appendix D to part 238 and that § 238.223(a) require external fuel tanks comply with § 229.217(a). The commenter believed that this is necessary to avoid redundancy and to ensure that there is only one interpretation of the requirements of external fuel tanks. FRA has decided to refer this issue to the RSAC Passenger Safety Working Group for resolution. However, for the present time, FRA is clarifying that passenger locomotives that are subject to the requirements of §§ 238.223 and 238.423 are not required to comply with the provision of § 229.217(a).

Paragraph (b) requires locomotives equipped with internal fuel tanks to meet the requirements of § 238.223, which governs design of fuel tanks on passenger locomotives. Although FRA contemplates most locomotives equipped with internal fuel tanks will be used in passenger service, FRA has classified locomotives by design rather than intended service, in order to allow maximum operational flexibility by the carriers.

Appendix E—Performance Criteria for Structural Design

This appendix provides performance criteria for the structural design of locomotives (other than monocoque/semi-monocoque design or narrow-nose design), comprised basically of the front end structure inclusive of a wide, short hood and collision posts with a cab structure. Demonstration that these criteria have been satisfied may be accomplished through any of the methods described in § 229.211. In conventional locomotive design, these two areas cover basically all of the major structural support separating cab occupants from the impacting objects in a locomotive collision. The criteria, which were recommended by RSAC and adopted by FRA, were developed by the Engineering Task Force with support from the Volpe Center. Each lettered paragraph of this appendix covers a different collision scenario, indicating the objective of the scenario, the proxy, or contemplated colliding object, the conditions of the impact, and the allowable results. The performance standard being adopted will allow for the maximum level of flexibility in future locomotive design.

The performance criteria for the locomotive crashworthiness design features provide a minimum level of structural safety for locomotive cab occupants involved in a collision. The logic behind the performance criteria is that locomotives designed to meet the performance criteria specified in this final rule will be able to preserve survivable space in the locomotive cab in a collision under similar conditions as specified in this appendix, as well as those involving lower closing speeds. For instance, a locomotive traveling 30 miles per hour colliding with a heavy highway vehicle (weighing no more than 65,000 pounds, or 32½ tons) at a highway-rail grade crossing should maintain sufficient survivable space for its occupants if it is built to the standards required by this final rule, even if it effectively overrides the underframe of the locomotive. However, since actual collision conditions may vary greatly, these figures should only be used as guidelines and not relied upon as precise cutoff levels of locomotive crashworthiness. Whether there will be sufficient survivable space inside the locomotive cab depends on many unpredictable factors as well.

With these considerations, FRA desires to allow for maximum flexibility in locomotive design by issuing performance criteria to protect cab occupants where possible. The criteria for the front end structure of the locomotive are based on specified collision scenarios or performance requirements.

Paragraph (a) provides performance criteria for design of the front end structure where, in conventional locomotive design, collision posts would normally be found. This collision scenario is intended to simulate a collision between a locomotive and a heavy highway vehicle at a highway-rail grade crossing. The proxy object in this scenario is designed to represent the heavy highway vehicle. The intended simulated impact conditions are specified for the closing speed, point of impact, and maximum allowable crush distance along the longitudinal axis of the locomotive. The improvements in crashworthiness required under this scenario will also have the effect of reducing intrusion into the cab during collisions between locomotives and other rail rolling stock.

Paragraph (b) provides performance criteria for design of the front end structure, where, in conventional locomotive design, the short hood is normally found. The objective of this scenario is to simulate an oblique collision with an intermodal container offset from a freight car on an adjacent parallel track. This collision scenario is based on the collision conditions, other than speed, found in the May 16, 1994 Selma, NC, collision involving an overhanging intermodal trailer on northbound CSXT 176 freight train and the lead locomotive on southbound Amtrak passenger train 87. The closing speed between these two trains was estimated at about 110 mph. The proxy object in this scenario represents the intermodal trailer, and the intended simulated impact conditions are specified for the closing speed (30 mph), point of impact, and maximum allowable crush distance along the longitudinal axis of the locomotive.

In the course of the discussions held, the Working Group also performed research into strengthening the window frame structure of wide-nose locomotives. The window frame structure for typical wide-nose locomotives currently in use in North America is made up of two corner posts and a central post all of which are tied into the roof. After considerable discussion at the last meeting prior to the issuance of the NPRM, the Working Group decided against recommending design load requirements as well as performance requirements for the window frame structure. The key argument raised by members of the Working Group was that a majority of the cost, approximately one-half of the total cost for all modifications, would be incurred by the need for extensive engineering re-design and fabrication re-tooling. The benefits associated with the modifications to the window frame structure were small based upon the accident review. FRA agreed with the Working Group's analysis and decided to postpone promulgation of proposed requirements for the window frame structure for wide-nose locomotives pending further detailed study.

AAR S–580–2005, Locomotive Crashworthiness Requirements

FRA has approved AAR S–580–2005 as an acceptable design standard, for purposes of satisfying the performance criteria of Appendix E.

AAR S–580–2005 contains design requirements for locomotive front end structure design, as well as other miscellaneous design requirements, some of which are Federal requirements as well. Structural requirements listed in AAR S–580–2005 are divided into three different subsections: one for locomotives of traditional wide-nose designs, one for locomotives of narrow-nose design, and one for those of semi-monocoque/monocoque design. There are separate requirements for these general classifications of designs in order to account for the different service conditions they typically operate under and the significantly different crush characteristics of the designs. For example, FRA mandates less stringent front end structure requirements for narrow-nose locomotives because they are used mainly in switching service. During switching operations, visibility to and from the cab is essential in preventing injuries and fatalities. FRA feels that requirements for a significantly enhanced front end structure on narrow-nose locomotives would be detrimental to visibility to and from the locomotive cab. Manufacturers have indicated that further strengthening would require major redesign, with structural members taking up more physical space in the cab. As a result, FRA has balanced these safety risks by increasing the strength requirements for the front end of narrow-nose locomotives, but only to the extent that the functionality of these locomotives would not be compromised.

Requirements in AAR S–580–2005 for wide-nose locomotive front end structure encompass three main components: anti-climbers, collision posts, and short hood structure.

Collision posts: the collision posts are the primary crash-energy absorbing features on a locomotive involved in an in-line train-to-train collision or impact with a large motor vehicle. S–580, as

adopted in 1989, provided for a ''500,000/200,000 pound'' collision post. Through its efforts, the Working Group found that strengthened collision posts would provide additional collision protection to the cab occupants. Specifically, the group found that a collision post which can handle an application of 750,000 pounds at the point of attachment and 500,000 pounds of force applied at a point 30 inches above the top of the underframe could withstand the same damage in collisions occurring at a closing speed 2 mph higher than the baseline S–580 design. A collision post which can handle 800,000 pounds at the same point behaves similarly in collisions occurring at closing speeds 8 mph faster than the baseline S–580 design. However, increasing the strength of the collision posts to a point beyond that of the strength of the underframe would serve no useful purpose, because the underframe would fail before the collision posts.[8] The Working Group found it more desirable to have the collision posts fail before the underframe does, thereby reducing the possibility of override due to either the formation of a ramp caused by underframe deformation or catapulting. The Working Group ultimately recommended the ''750,000/500,000 pound'' collision post as a minimum standard. FRA agrees and the final rule reflects this recommendation.

AAR S–580–2005 also requires collision posts to extend to a minimum of 24 inches above the finished floor and be located forward of the position of any seated crew member. The position of the collision posts and their required height were developed to provide the crew members a survivable area in the event of a frontal collision with an object above the underframe of the locomotive. The Working Group discussed the advantages of such a survivable volume in that it may help encourage crew members to remain in the cab rather than jumping, as they often do in the face of a collision. This would prevent unnecessary injuries, and even fatalities, resulting from jumping in these situations. FRA agrees with the Working Group's recommendation and the final rule reflects this recommendation.

Short Hood Structure: The short hood structure is constructed primarily from steel sheets, and spans the width of the locomotive from the finished floor up to the window frame. It provides additional protection to occupants. Since it extends the width of the locomotive (unlike collision posts), it is the primary means of protection in the event the locomotive collides with an object at an angle or a load is applied longitudinally outside of the collision posts, such as in a collision with an offset trailer on a flatbed car.

A short hood structure meeting the performance requirements in Appendix E should provide adequate protection to cab occupants in a 30-mile per hour collision with an offset trailer on a flatcar on an adjacent track. Such a structure should be able to withstand a load of 400,000 pounds. It is also intended to crush in a collision, absorbing some energy. Thus, the model design requirements of AAR S–580–2005 provide guidelines for design of a short hood structure having such strength characteristics.

AAR S–580–2005 also covers front end structural requirements for semi-monocoque locomotives in section 8.0 ''Monocoque or Semi-monocoque Locomotive Designs.'' This design standard was adapted from the performance requirements of Appendix E and through variation of the design standard for wide-nose locomotives. Since locomotives of monocoque or semi-monocoque design are more efficient in managing crash energy due to the load-bearing capabilities of the wall and roof structures, they may be designed using a slightly weaker underframe than the conventional wide-nose locomotives. This type of design better distributes loads applied to its front end by effectively transferring them to the walls and roof, as well as the underframe. This design allows it to utilize a less-resistant underframe in order to provide the same degree of protection. Limited data from the performance of semi-monocque locomotives involved in locomotive collisions has corroborated this theory.

Section 7.0 ''Narrow-Nose Locomotives'' covers design requirements for the front-end structure of narrow-nose locomotives. Strength requirements for the front end structure of narrow-nose locomotives are less stringent than those for wide-nose locomotives. The narrow nose on these locomotives simply does not allow for equivalent protection at the widest part of the locomotive in front of the cab. Although this makes the wide-nose locomotive more desirable for use in road freight service, narrow-nose locomotives have become useful in intermediate-haul and local switching operations because they offer cab occupants a much greater range of vision from the cab. During these types of movements, unobstructed vision is very important because railroad personnel are often standing on or near the right of way directing the movement. FRA believes that provision must be made for use of the narrow-nose locomotive design to maintain an appropriate level of safety during intermediate-haul and local switching operations. FRA provides a design standard for narrow-nose locomotives which maximizes the strength of the front corners using existing technology and materials without sacrificing occupant visibility from the cab.

The most significant safety risk with respect to narrow-nose locomotives is their regular use in road-haul service. Since the Class I railroads have followed a trend of purchasing more and more wide-nose locomotives to be used in road freight service, the use of narrow-nose locomotives in a manner inconsistent with their intended service (*i.e.*, over-utilization in road freight service) is unlikely. Through the course of its deliberations, the Working Group had discussed possibilities of (1) restricting service of narrow-nose locomotives to intermediate- and local-haul and transfer train service, (2) restricting them to a maximum speed limit, and (3) restricting design of these locomotives to a maximum horsepower limit. In its final recommendation, the Working Group decided not to recommend any service or design restrictions. FRA has no reason to believe that the trend of purchasing wide-nose locomotives will not continue, and thus does not issue any service or design restrictions on narrow-nose locomotives in this rule.

One commenter requested clarification as to how crush is defined in the collision post and the short hood scenarios. Crush is the relative longitudinal distance between the centers of gravity of the impacting object and the locomotive. Crush is measured from the initial contact until maximum penetration. The centers of gravity are located on the undeformed bodies, and are assumed to be fixed to the bodies. This is the definition of crush used in the engineering studies conducted in support of this rule. Full or sub-scale tests, hand calculations, detailed numerical modeling, or some combination of these techniques may be used to show that the requirements of Appendix E are met.

A maximum of 24 inches of crush of the locomotive is allowed in Appendix E (a) *Front end structure (collision posts)* and a maximum of 60 inches of crush in Appendix E (b) *Front end structure (short hood)*. These distances were chosen based on the results of the engineering studies conducted in

[8] ADL presentation at July 14–15, 1998 Working Group meeting. This presentation has been placed in the docket of this rulemaking.

support of this rule. These studies show that a significant increase in locomotive crashworthiness can be achieved by requiring the collision posts or equivalent structure to crush up to 24 inches, and that it is difficult to create a design for such structures capable of crushing longer distances while still absorbing energy. These studies also show that the locomotive short hood structures can crush for distances up to 60 inches while absorbing energy.

The commenter recommended that the Working Group re-evaluate whether additional prescriptive requirements, such as specific dimensional parameters for collision post positioning, be included in the performance standard. The commenter also suggested that a statement be added clarify whether it is acceptable to have complete separation of the collision posts from the underframe. The commenter also suggested that this part specify that the proxy object must be centered laterally along the longitudinal centerline of the locomotive. FRA does not intend to prescribe methodologies for demonstrating compliance. Compliance with the existing requirements and proposed requirements can be shown using reasonable engineering methods, which include appropriate analyses and tests.

It should be noted that the Working Group abandoned discussions over a fourth design standard, that of the yard switcher locomotive. Such a locomotive would be designed for use solely in the assembling and disassembling of trains, and could be designed to the standard of S–580.

AAR Standard S–5506, Performance Requirements for Diesel Electric Locomotive Fuel Tanks (October 1, 2001)

This standard contains the requirements recommended by the Working Group and adopted by FRA for the design of external fuel tanks, with the exception of Section 4.4 as noted above. The full text of AAR–S–5506 has been placed in the docket of this proceeding. This AAR standard was adopted from an earlier recommended practice, RP–506, which was first adopted in 1995.

Amendments to Part 238

In contrast to requirements for passenger-occupied cab control cars and multiple unit (MU) locomotives, there are no current Federal regulations directed towards conventional locomotive crashworthiness design. In the NPRM, FRA proposed that the revisions to part 229 revise subpart D to address locomotive crashworthiness design for all locomotives covered by this rule while moving § 229.141 to part 238 as § 238.224. FRA subsequently determined that moving § 229.141 to part 238 may cause more confusion than necessary, in particular due to draftsmanship constraints to properly state the applicability dates for the various equipment covered by § 229.141 and part 238, in particular. In addition, moving § 229.141 to part 238 would have no effect on the substantive requirements of the two regulations. Therefore, FRA has decided to keep § 229.141 in its current location. However, the final rule clarifies its application in relation to provisions in part 238. Specifically, new paragraphs (a)(6) and (b)(6) of § 229.141 restate what is currently provided in paragraphs (d) and (e) of § 229.3. In addition, section 238.201(a)(2) now cross-references § 229.141 for clarity as well.

FRA amended § 229.141 as part of the May 12, 1999, Passenger Equipment Safety Standards final rule, so that its requirements would not conflict with the requirements of part 238. However, in the case of passenger equipment excluded from the structural requirements of §§ 238.203 through 238.219, and § 238.223 by operation of § 238.201(a)(2), there is no direct conflict, and FRA intended that such passenger equipment remain subject to any applicable requirements in § 229.141. Hence, paragraphs (d) and (e) were added to § 229.3 as part of the 1999 rulemaking. See 64 FR 25659–25660. FRA is hereby adding clarity to the relationship between these two regulations as best as we can with minimal addition of regulatory text, as stated above.

One commenter also suggested that FRA either delete both § 238.205(b) and § 238.233(f) or modify them to reference only § 229.206. FRA agrees with the commenter that both sections should be amended to avoid having different requirements for the same issue in two different regulations for anti-climbers and seat attachments. FRA has not deleted these provisions, which are required to govern existing locomotive construction; however, FRA has clarified that § 229.206 applies to locomotives required to be built under the new subpart D of part 229 which takes effect on January 1, 2009.

Subpart A—General

Section 238.5 Definitions

The term ''fuel tank, external'' revises the current part 238 definition by replacing the word ''volume'' with the word ''vessel.'' FRA believes that this is a more accurate and grammatically correct definition.

The term ''fuel tank, internal'' revises the current part 238 definition by replacing the word ''volume'' with the word ''vessel.'' FRA believes that this is a more accurate and grammatically correct definition.

Regulatory Impact

Privacy Act

Anyone is able to search the electronic form of all comments received into any of FRA's dockets by the name of the individual submitting the comment (or signing the comment, if submitted on behalf of an association, business, labor union, etc.). You may review DOT's complete Privacy Act Statement in the **Federal Register** published on April 11, 2000 (Volume 65, Number 70; Pages 19477–78) or you may visit *http://dms.dot.gov*.

Executive Order 12866 and DOT Regulatory Policies and Procedures

This rule has been evaluated in accordance with existing policies and procedures, and determined to be significant under both Executive Order 12866 and DOT policies and procedures. (44 FR 11034; Feb 26, 1979). FRA has prepared and placed in the docket a regulatory analysis addressing the economic impact of this final rule.

As part of the regulatory analysis FRA has assessed quantitative measurements of cost and benefit streams expected from the adoption of this final rule. For a twenty-year period the estimated quantified costs total $81.6 million, and have a Present Value (PV) of $43.9 million. (In calculating the present value, FRA used a 7% percent discount rate and 2004 dollars.) For this period the estimated quantified benefits total $125.9 million, which have a PV of $52.4 million. Over this twenty-year period, the Net Present Value (NPV) of this final rule is a positive $8.5 million. The major costs anticipated from adopting this final rule include: redesign costs for locomotive models; and the marginal cost increases for labor and supplies needed for the more crashworthy locomotives.

The major benefits anticipated from implementing this final rule include: a reduction of the damages incurred by locomotives when they are involved in collisions; and a reduction in the severity of casualties resulting from locomotive collisions. In addition, there should be a reduction in the number of lost work days by employees who occupy locomotive cabs.

Regulatory Flexibility Act

The Regulatory Flexibility Act of 1980 (5 U.S.C. 601 *et seq.*) requires a review of proposed and final rules to assess their impact on small entities. FRA has prepared and placed in the docket a Small Entity Impact Assessment and Evaluation which assesses the necessary and pertinent small entity impacts.

Executive Order No. 13272, ''Proper Consideration of Small Entities in Agency Rulemaking,'' requires Federal agencies, among other things, to notify the Chief Counsel for Advocacy of the U.S. Small Business Administration (SBA) of any of its draft rules that will have a significant economic impact on a substantial number of small entities. The Executive Order also requires Federal agencies to consider any comments provided by the SBA and to include in the preamble to the rule the agency's response to any written comments by the SBA, unless the agency head certifies that the inclusion of such material would not serve the public interest. 67 FR 53461 (Aug. 16, 2002).

The SBA stipulates in its ''Size Standards'' that the largest a railroad business firm that is ''for-profit'' may be, and still be classified as a ''small entity'' is 1,500 employees for ''Line-Haul Operating'' Railroads, and 500 employees for ''Switching and Terminal Establishments.'' ''Small entity'' is defined in 5 U.S.C. 601 as a small business concern that is independently owned and operated, and is not dominant in its field of operation. SBA's ''size standards'' may be altered by Federal agencies on consultation with SBA and in conjunction with public comment. Pursuant to that authority, FRA has published a final policy which formally establishes ''small entities'' as being railroads which meet the line haulage revenue requirements of a Class III railroad. Currently, the revenue requirements are $20 million or less in annual operating revenue. The $20 million limit is based on the Surface Transportation Board's (STB's) threshold of a Class III railroad carrier, which is adjusted by applying the railroad revenue deflator adjustment (part 1201). The same dollar limit on revenues is established to determine whether a railroad shipper or contractor is a small entity.

For this final rule there are over 410 railroads which could potentially be affected. The impacts from this regulation are primarily a result of increased cost to produce more crashworthy locomotives. These costs include re-design and engineering costs for the new locomotive designs/models, and for the marginal costs of the incremental crashworthiness improvements. All of these impacts or costs are passed on to customers or purchasers of new locomotives. However, only railroads which purchase new or original equipment will be impacted, and FRA is not aware of any small railroads that purchase new locomotives. Hence, FRA does not expect this regulation to directly impact any small railroads.

FRA expects that minimal costs of re-designing a new locomotive will be passed through to a small entity when they purchase a used, re-designed locomotive. Small entities will not likely be purchasing those used, re-designed locomotives until 15 or 20 years after this regulation becomes effective. FRA does not believe that in 15 or 20 years the relative cost of a used locomotive that is in compliance with this regulation will change significantly from the current cost of a used locomotive. Therefore, FRA does not expect that this regulation will have any indirect impact on small railroads either.

To determine the significance of the economic impact for this final rule's Regulatory Flexibility Act requirements, FRA invited comments to its NPRM from all interested parties concerning the potential economic impact on small entities caused by this rule.

FRA received one comment from an interested party who believed that this rule would be detrimental to short line and regional railroads. The commenter believed that this rule would discourage smaller railroads from rebuilding locomotive diesel engines. The commenter suggested that the threshold used to determine whether or not a locomotive is considered ''remanufactured'' be modified upward so as to exempt smaller railroads.

The commenter referenced § 229.203—''Applicability'', of the NPRM. However, the commenter's reference to this section was made without acknowledgment of the definition of ''remanufactured'' locomotive. In § 229.5, the definition of ''remanufactured'' locomotive specifies that in order to be classified as ''remanufactured'' a locomotive must be rebuilt or refurbished from a previously used or refurbished underframe (deck), containing *fewer* than 25% previously used components.

FRA clearly was concerned about this issue and sought comment on it in the NPRM. FRA requested comment as to whether a ''remanufactured'' locomotive should be treated as a new locomotive. FRA intended the definition of ''remanufactured'' locomotive to not permit what is essentially a new locomotive to be excluded from the regulatory requirements.

ASLRRA participated in the RSAC Working Group that developed the proposed rule, which was recommended to the Administrator and became the NPRM. The ASLRRA never registered an issue or concern with the definition of ''remanufactured'' locomotive. In addition, FRA has not received any data or evidence that shows that the level of rebuilding a short line railroad would perform on a locomotive would reach the threshold of the definition of remanufactured locomotive to be impacted by this rulemaking. On the contrary, FRA believes that the rebuilding that short line railroads perform on locomotives involves less than 75% new parts. FRA, therefore, disagrees with this commenter and restates that this rulemaking should not have an impact on the type or level or rebuilding that smaller railroads would perform on a locomotive.

Based on the lack of any evidence to alter FRA's previous determination, FRA certifies that this final rule is not expected to have a significant economic impact on a substantial number of small entities.

Paperwork Reduction Act

The information collection requirements in this final rule have been submitted for approval to the Office of Management and Budget (OMB) under the Paperwork Reduction Act of 1995, 44 U.S.C. 3501 *et seq.* The sections that contain the new information collection requirements and the estimated time to fulfill each requirement are as follows:

CFR Section—49 CFR	Respondent universe	Total annual responses	Average time per response	Total annual burden hours	Total annual burden cost
229.207A—Petitions For FRA Approval of New Locomotive Crashworthiness Design Standards.	685 Railroads/4 Locomotive Manufacturers.	2 petitions	1,050 hours ..	2,100	$4,000

CFR Section—49 CFR	Respondent universe	Total annual responses	Average time per response	Total annual burden hours	Total annual burden cost
—Subsequent Years	685 Railroads/4 Locomotive Manufacturers.	1 petition	1,050 hours	1,050	2,000
229.207B—Petitions For Substantive Changes to an FRA-Approved Locomotive Crashworthiness Design Standard.	685 Railroads/4 Locomotive Manufacturers.	2 petitions	1,050 hours	2,100	254,000
229.207C—Petitions For Non-Substantive Changes to an FRA-Approved Locomotive Crashworthiness Design Standard.	685 Railroads/4 Locomotive Manufacturers.	4 petitions	400 hours	1,600	183,000
229.209—Petitions For FRA Approval of Alternative Locomotive Crashworthiness Designs.	685 Railroads/4 Locomotive Manufacturers.	1 petition	2,550 hours	2,550	2,000
229.211A—Processing of Petitions—Comment.	4 Locomotive Manufacturers/Railroad Association/Labor Organizations/Public.	10 comments	16 hours	160	6,400
229.211B—Additional Information Concerning Petitions.	4 Locomotive Manufacturers/Railroad Association/Labor Organizations/Public.	4 hearings	24 hours	96	3,840
229.213—Locomotive Manufacturing information.	685 Railroads	700 records	6 minutes	70	2,800
229.215A—Retention of Records—Original Design.	4 Locomotive Manufact.	24 records	8 hours	192	7,680
229.215B—Retention of Records—Repair and Modifications.	685 Railroads/Locomotive Lessess	6 records	4 hours	24	960
229.215C—Inspection of Records	6 Locomotive Manufacturers/Rebuilders	10 records	2 minutes	.33	13

All estimates include the time for reviewing instructions; searching existing data sources; gathering or maintaining the needed data; and reviewing the information. For information or a copy of the paperwork package submitted to OMB, contact Robert Brogan, Information Clearance Officer, at 202–493–6292.

OMB is required to make a decision concerning the collection of information requirements contained in this final rule between 30 and 60 days after publication of this document in the **Federal Register**.

FRA is not authorized to impose a penalty on persons for violating information collection requirements which do not display a current OMB control number, if required. FRA intends to obtain current OMB control numbers for any new information collection requirements resulting from this rulemaking action prior to the effective date of this final rule. The OMB control number, when assigned, will be announced by separate notice in the **Federal Register**.

Environmental Impact

FRA has evaluated this final rule in accordance with the agency's ''Procedures for Considering Environmental Impacts'' as required by the National Environmental Policy Act (42 U.S.C. 4321 *et seq.*), and related statutes and directives. The agency has determined that the final regulation would not have a significant impact on the human or natural environment and is categorically excluded from detailed environmental review pursuant to section 4(c)(20) of FRA's Procedures. Neither an environmental assessment or an environmental impact statement is required in this instance. The agency's review has confirmed the applicability of the categorical exclusion to this final regulation and the conclusion that the final rule would not, if implemented, have a significant environmental impact.

Federalism Implications

FRA has analyzed this final rule in accordance with the principles and criteria contained in Executive Order 13132, issued on August 4, 1999, which directs Federal agencies to exercise great care in establishing policies that have federalism implications. *See* 64 FR 43255. This final rule will not have a substantial effect on the States, on the relationship between the national government and the States, or on the distribution of power and responsibilities among various levels of government. This final rule will not have federalism implications that impose any direct compliance costs on State and local governments.

FRA notes that the RSAC, which reached a consensus on recommending this final rule to FRA, has as permanent members two organizations representing State and local interests: the American Association of State Highway and Transportation Officials (AASHTO) and the Association of State Rail Safety Managers (ASRSM). Both of these State organizations concurred with the RSAC recommendation endorsing this final rule. The RSAC regularly provides recommendations to the FRA Administrator for solutions to regulatory issues that reflect significant input from its State members. To date, FRA has received no indication of concerns about the federalism implications of this rulemaking from these representatives or of any other representatives of State government. Consequently, FRA concludes that this final rule has no federalism implications, other than the preemption of State laws covering the subject matter of this final rule, which occurs by operation of law under 49 U.S.C. 20106 whenever FRA issues a rule or order.

Compliance With the Unfunded Mandates Reform Act of 1995

Pursuant to the Unfunded Mandates Reform Act of 1995 (Pub. L. 104–4) each Federal agency ''shall, unless otherwise prohibited by law, assess the effects of Federal Regulatory actions on State, local, and tribal governments, and the private sector (other than to the extent that such regulations incorporate requirements specifically set forth in law).'' Sec. 201. Section 202 of the Act further requires that ''before promulgating any final rule for which a general notice of proposed rulemaking was published, the agency shall prepare a written statement'' detailing the effect on State, local and tribal governments and the private sector. The final rule issued today does not include any mandates which will result in the expenditure, in the aggregate, of $128,100,000 or more in any one year,

and thus preparation of a statement is not required.

List of Subjects

49 CFR Part 229

Incorporation by reference, Locomotives, Railroad safety, Transportation.

49 CFR Part 238

Passenger equipment, Railroad safety, Transportation.

The Final Rule

■ In consideration of the foregoing, FRA is amending parts 229 and 238 of chapter II, subtitle B of title 49, Code of Federal Regulations, as follows:

PART 229—[AMENDED]

■ 1. The authority citation for part 229 continues to read as follows:

Authority: 49 U.S.C. 20102–20103, 20107, 20133, 20137–20138, 20143, 20701–20703, 21301–21302, 21304; 49 CFR 1.49(c), (m).

■ 2. Amend § 229.5 by revising the definition of ''remanufactured locomotive'' and adding in alphabetical order additional definitions to read as follows:

§ 229.5 Definitions.

* * * * *

AAR means the Association of American Railroads.

Anti-climbers means the parts at the ends of adjoining rail vehicles in a train that are designed to engage when subjected to large buff loads to prevent the override of one vehicle by another.

Associate Administrator for Safety means the Associate Administrator for Safety, Federal Railroad Administration, or that person's delegate as designated in writing.

* * * * *

Build date means the date on which the completed locomotive is shipped by the manufacturer or remanufacturer to the customer, or if the railroad manufactures or remanufactures the locomotive itself, the date on which the locomotive is released from the manufacture or remanufacture facility.

* * * * *

Collision posts means structural members of the end structures of a rail vehicle that extend vertically from the underframe to which they are securely attached and that provide protection to occupied compartments from an object penetrating the vehicle during a collision.

Corner posts means structural members located at the intersection of the front or rear surface with the side surface of a rail vehicle and which extend vertically from the underframe to the roof.

* * * * *

Designated service means exclusive operation of a locomotive under the following conditions:

(1) The locomotive is not used as an independent unit or the controlling unit in a consist of locomotives except when moving for the purposes of servicing or repair within a single yard area;

(2) The locomotive is not occupied by operating or deadhead crews outside a single yard area; and

(3) The locomotive is stenciled ''Designated Service—DO NOT OCCUPY.''

Design standard means a criterion adopted by an industry or voluntary consensus standards body, which addresses the design of a locomotive with respect to its crashworthiness and crashworthiness features.

* * * * *

FRA means the Federal Railroad Administration.

Fuel tank, external means a fuel containment vessel that extends outside the car body structure of a locomotive.

Fuel tank, internal means a fuel containment vessel that does not extend outside the car body structure of a locomotive.

* * * * *

Lateral means the horizontal direction perpendicular to the direction of travel.

* * * * *

Locomotive cab means the compartment or space on board a locomotive where the control stand is located and which is normally occupied by the engineer when the locomotive is operated.

Longitudinal means in a direction parallel to the normal direction of travel.

* * * * *

Manufacture means the act of constructing a locomotive.

* * * * *

Monocoque design locomotive means a locomotive design where the shell or skin acts as a single unit with the supporting frame to resist and transmit the loads acting on the locomotive.

* * * * *

Narrow-nose locomotive means a locomotive with a short hood that spans substantially less than the full width of the locomotive.

Occupied service means the operation of a locomotive when the cab is physically occupied by a person.

* * * * *

Permanent deformation means the undergoing of a permanent change in shape of a structural member of a rail vehicle.

* * * * *

Power car means a rail vehicle that propels a Tier II passenger train or is the lead vehicle in a Tier II passenger train, or both.

* * * * *

Remanufacture means the act of constructing a remanufactured locomotive.

Remanufactured locomotive means a locomotive rebuilt or refurbished from a previously used or refurbished underframe (''deck''), containing fewer than 25% previously used components (measured by dollar value of the components). For calculation purposes, the percentage of previously used components is determined with equivalent value of new parts and is calculated using dollar values from the same year as the new parts used to remanufacture the locomotive.

Roof rail means the longitudinal structural member at the intersection of the side wall and the roof sheathing.

* * * * *

Semi-monocoque design locomotive means a locomotive design where the skin or shell acts, to some extent, as a single unit with the supporting frame to resist and transmit the loads acting on the locomotive.

Semi-permanently coupled means coupled by means of a drawbar or other coupling mechanism that requires tools to perform the uncoupling operation.

* * * * *

Short hood means the part of the locomotive above the underframe located between the cab and the nearest end of the locomotive.

Standards body means an industry and/or professional organization or association which conducts research and develops and/or issues policies, criteria, principles, and standards related to the rail industry.

* * * * *

Tier II means operating at speeds exceeding 125 mph but not exceeding 150 mph.

* * * * *

Ultimate strength means the load at which a structural member fractures or ceases to resist any load.

* * * * *

Wide-nose locomotive means a locomotive with a short hood that spans the full width of the locomotive.

■ 3. Revise the heading of subpart D of part 229 to read as follows:

Subpart D—Locomotive Crashworthiness Design Requirements

■ 4. Amend § 229.141 to add new paragraphs (a)(6) and (b)(6) to read as follows:

§ 229.141 Body structure, MU locomotives.

(a) * * *

(6) On or after November 8, 1999, paragraph (a)(1) of this section does not apply to ''passenger equipment'' as defined in § 238.5 of this chapter, unless such equipment is excluded from the requirements of §§ 238.203 through 238.219, and § 238.223 of this chapter by operation of § 238.201(a)(2) of this chapter. Paragraphs (a)(2) through (a)(4) of this section do not apply to ''passenger equipment'' as defined in § 238.5 of this chapter that is placed in service for the first time on or after September 8, 2000, unless such equipment is excluded from the requirements of §§ 238.203 through 238.219, and § 238.223 of this chapter by operation of § 238.201(a)(2) of this chapter.

(b) * * *

(6) On or after November 8, 1999, paragraph (a)(1) of this section does not apply to ''passenger equipment'' as defined in § 238.5 of this chapter, unless such equipment is excluded from the requirements of §§ 238.203 through 238.219, and § 238.223 of this chapter by operation of § 238.201(a)(2) of this chapter. Paragraphs (a)(2) through (a)(4) of this section do not apply to ''passenger equipment'' as defined in § 238.5 of this chapter that is placed in service for the first time on or after September 8, 2000, unless such equipment is excluded from the requirements of §§ 238.203 through 238.219, and § 238.223 of this chapter by operation of § 238.201(a)(2) of this chapter.

■ 5. Add new § 229.201 to Subpart D to read as follows:

§ 229.201 Purpose and scope.

(a) *Purpose.* The purpose of this subpart is to help protect locomotive cab occupants in the event that a locomotive collides with another locomotive or piece of on-track equipment, a shifted load on a freight car on an adjacent parallel track, or a highway vehicle at a highway-rail grade crossing.

(b) This subpart prescribes minimum crashworthiness standards for locomotives. It also establishes the requirements for obtaining FRA approval of: new locomotive crashworthiness design standards; changes to FRA-approved locomotive crashworthiness design standards; and alternative locomotive crashworthiness designs.

■ 6. Add new § 229.203 to Subpart D to read as follows:

§ 229.203 Applicability.

(a) Except as provided in paragraphs (b) and (c) of this section, this subpart applies to all locomotives manufactured or remanufactured on or after January 1, 2009.

(b) *Cab cars and power cars.* The requirements of this subpart do not apply to cab control cars, MU locomotives, DMU locomotives, and semi-permanently coupled power cars that are subject to the design requirements for such locomotives set forth in part 238 of this chapter.

(c) *Locomotives used in designated service.* Locomotives used in designated service are exempt from the requirements of this subpart, with the exception of § 229.233 (minimum requirements for fuel tank design), which remains applicable to such locomotives.

■ 7. Add new §§ 229.205 through 229.207 to Subpart D to read as follows:

§ 229.205 General requirements.

(a) Each wide-nose locomotive used in occupied service must meet the minimum crashworthiness performance requirements set forth in Appendix E of this part. Compliance with those performance criteria must be established by:

(1) Meeting an FRA-approved crashworthiness design standard (including AAR S–580, Locomotive Crashworthiness Requirements). The Director of the Federal Register approves incorporation by reference of the AAR S–580 (revised July 2005), ''Locomotive Crashworthiness Requirements,'' in this section in accordance with 5 U.S.C. 552(a) and 1 CFR part 51. You may obtain a copy of the incorporated standard from the Association of American Railroads, 50 F Street NW, Washington, DC 20001. You may inspect a copy of the incorporated standard at the Federal Railroad Administration, Docket Clerk, 1120 Vermont Ave., NW Suite 7000, Washington, DC 20590 or at the National Archives and Records Administration (NARA). For information on the availability of this material at NARA, call 202–741–6030, or go to *http://www.archives.gov/federal_register/code_of_federal_regulations/ibr_locations.html;*

(2) Meeting new design standards and changes to existing design standards approved by FRA pursuant to § 229.207; or

(3) Meeting an alternative crashworthiness design approved by FRA pursuant to § 229.209.

(b) A monocoque or semi-monocoque design locomotive must be designed in accordance with the provisions of AAR S–580, applicable to those types of locomotives, in accordance with §§ 238.405(a), 238.409 and 238.411 of this chapter, or in accordance with a standard or design approved by FRA as providing at least equivalent safety.

(c) A narrow-nose locomotive must be designed in accordance with the provisions of AAR S–580, applicable to that type of locomotive (notwithstanding any limitation of scope contained in that standard) or in accordance with a standard or design approved by FRA as providing at least equivalent safety.

§ 229.206 Design requirements.

Each locomotive used in occupied service must meet the minimum anti-climber, emergency egress, emergency interior lighting, and interior configuration design requirements set forth in AAR S–580 (incorporated by reference, see § 229.205).

§ 229.207 New locomotive crashworthiness design standards and changes to existing FRA-approved locomotive crashworthiness design standards.

(a) *General.* The following procedures govern consideration and action upon requests for FRA approval of new locomotive crashworthiness design standards and changes to existing FRA-approved locomotive crashworthiness design standards, including AAR S–580 (incorporated by reference, see § 229.205). Only a standards body which has adopted an FRA-approved locomotive crashworthiness design standard may initiate these procedures for FRA approval of changes to the standard.

(b) *Petitions for FRA approval of new locomotive crashworthiness design standards.* Each petition for FRA approval of a locomotive crashworthiness design standard must be titled ''Petition for FRA Approval of a New Locomotive Crashworthiness Design Standard,'' must be submitted to the Associate Administrator for Safety, Federal Railroad Administration, 1120 Vermont Ave., NW., Mail Stop 25, Washington, DC 20590, and must contain the following:

(1) The name, title, address, telephone number and e-mail address of the primary person to be contacted with regard to review of the petition;

(2) The proposed locomotive design standard, in detail;

(3) The intended type of service for locomotives designed under the proposed standard; and

(4) Appropriate data and analysis showing how the proposed design standard either satisfies the requirements of § 229.205 for the type of locomotive design or provides at least an equivalent level of safety. Types of data and analysis to be considered are described in § 229.211(c)(1).

(c) *Petitions for FRA approval of substantive changes to an FRA-approved locomotive crashworthiness design standard.* Each petition for approval of a substantive change to an FRA-approved locomotive crashworthiness design standard must be titled ''Petition for FRA Approval of Changes to a Locomotive Crashworthiness Design Standard,'' must be submitted to the Associate Administrator for Safety, Federal Railroad Administration, 1120 Vermont Ave., NW., Mail Stop 25, Washington, DC 20590, and must contain the following:

(1) The name, title, address, telephone number and e-mail address of the primary person to be contacted with regard to review of the petition;

(2) The proposed change, in detail;

(3) The intended type of service for locomotives built with the proposed change; and

(4) Appropriate data and analysis showing how the resulting standard either satisfies the requirements for the type of locomotive set forth in § 229.205 or provides at least an equivalent level of safety. Types of data and analysis to be considered are described in § 229.211(c)(1).

(d) *Petitions for FRA approval of non-substantive changes to the existing FRA-approved crashworthiness design standards.* (1) Each petition for approval of a non-substantive change to an FRA-approved locomotive crashworthiness design standard must be titled ''Petition for FRA Approval of Non-substantive Changes to a Locomotive Crashworthiness Design Standard,'' must be submitted to the Associate Administrator for Safety, Federal Railroad Administration, 1120 Vermont Ave., NW, Mail Stop 25, Washington, DC 20590, and must contain the following:

(i) The name, title, address, telephone number and e-mail address of the primary person to be contacted with regard to review of the petition;

(ii) The proposed change, in detail; and

(iii) Detailed explanation of how the proposed change results in a non-substantive change to the existing FRA-approved crashworthiness design standard.

(2) If FRA determines that the proposed change is substantive, FRA will process the petition in accordance with paragraph (c) of this section.

■ 8. Add new § 229.209 to Subpart D to read as follows:

§ 229.209 Alternative locomotive crashworthiness designs.

(a) *General.* The following procedures govern consideration and action upon requests for FRA approval of locomotive crashworthiness designs which are not consistent with any FRA-approved locomotive crashworthiness design standard.

(b) *Petitions for FRA approval of alternative locomotive crashworthiness designs.* Each petition for FRA approval of an alternative locomotive crashworthiness design must be titled ''Petition for FRA Approval of Alternative Locomotive Crashworthiness Design,'' must be submitted to the Associate Administrator for Safety, Federal Railroad Administration, 1120 Vermont Ave., NW, Mail Stop 25, Washington, DC 20590, and must contain the following:

(1) The name, title, address, telephone number and e-mail address of the primary person to be contacted with regard to review of the petition;

(2) The proposed locomotive crashworthiness design, in detail;

(3) The intended type of service for locomotives built under the proposed design; and

(4) Appropriate data and analysis showing how the design either satisfies the requirements of § 229.205 for the type of locomotive or provides at least an equivalent level of safety. Types of data and analysis to be considered are described in § 229.211(c)(1).

■ 9. Add new § 229.211 to Subpart D to read as follows:

§ 229.211 Processing of petitions.

(a) *Federal Register notice.* FRA will publish in the **Federal Register** notice of receipt of each petition submitted under §§ 229.207(b), 229.207(c), or 229.209.

(b) *Comment.* Not later than 60 days from the date of publication of the notice in the **Federal Register** concerning a petition submitted under §§ 229.207(b), 229.207(c), or 229.209(b), any person may comment on the petition.

(1) Each comment must set forth specifically the basis upon which it is made, and contain a concise statement of the interest of the commenter in the proceeding.

(2) Each comment must be submitted to the U.S. Department of Transportation Central Docket Management System, Nassif Building, Room PL–401, 400 Seventh Street, SW., Washington, DC 20590, and must contain the assigned docket number which appeared in the **Federal Register** for that proceeding. The form of such submission may be in written or electronic form consistent with the standards and requirements established by the Central Docket Management System and posted on its Web site at *http://dms.dot.gov.*

(3) In the event FRA requires additional information to appropriately consider the petition, FRA will conduct a hearing on the petition in accordance with the procedures provided in § 211.25 of this chapter.

(c) *Disposition of petitions.* (1) In order to determine compliance with the performance criteria in Appendix E of this part, FRA will consider proper documentation of competent engineering analysis, or practical demonstrations, or both which may include validated computer modeling, structural crush analysis, component testing, full scale crash testing in a controlled environment, or any combination of the foregoing, together with evidence of effective peer review.

(2) If FRA finds that the petition complies with the requirements of this subpart and that the proposed change or new design standard satisfies the requirements of § 229.205 for the type of locomotive, the petition will be granted, normally within 90 days of its receipt. If the petition is neither granted nor denied within 90 days, the petition remains pending for decision. FRA may attach special conditions to the granting of the petition. Following the granting of a petition, FRA may reopen consideration of the petition for cause stated. Any decision granting or denying a petition is placed in the public docket for the petition.

(3) If FRA finds that the petition does not comply with the requirements of this subpart, or that the proposed change or new design standard does not satisfy the performance criteria contained in Appendix E of this part (where applicable), the petition will be denied, normally within 90 days of its receipt. If the petition is neither granted nor denied within 90 days, the petition remains pending for decision. FRA may re-open a denial of a petition for cause stated.

(4) When FRA grants or denies a petition, or reopens consideration of the petition, written notice will be sent to the petitioner and other interested parties and a copy of the notice will be

placed in the public docket of this proceeding.

■ 10. Add new § 229.213 to Subpart D to read as follows:

§ 229.213 Locomotive manufacturing information.

(a) Each railroad operating a locomotive subject to the requirements of this subpart must retain the following information:

(1) The date upon which the locomotive was manufactured or remanufactured;

(2) The name of the manufacturer or remanufacturer of the locomotive; and

(3) The design specification to which the locomotive was manufactured or remanufactured.

(b) The information required in paragraph (a) of this section must be located permanently in the locomotive cab or be provided within two business days upon request of FRA or an FRA-certified State inspector.

■ 11. Add new § 229.215 to Subpart D to read as follows:

§ 229.215 Retention and inspection of designs.

(a) *Retention of records—original designs.* Each manufacturer or remanufacturer of a locomotive subject to this subpart shall retain all records of the original locomotive designs, including supporting calculations and drawings, pertaining to crashworthiness features required by this subpart. These records must be retained for the lesser period of:

(1) The life of such locomotive, except that records for a locomotive destroyed in a rail equipment accident/incident shall be retained for at least 12 months following the accident/incident; or

(2) Twenty years after the date of manufacture or, if remanufactured, twenty years after the date of remanufacture.

(b) *Retention of records—repairs and modifications.* Each owner or lessee of a locomotive subject to this subpart shall retain all records of repair or modification to crashworthiness features required by this subpart. These records must be retained for the lesser period of:

(1) The life of such locomotive, except that records for a locomotive destroyed in a rail equipment accident/incident shall be retained for at least 12 months following the accident/incident, or

(2) Twenty years after the date on which the repair or modification was performed.

(c) *Inspection of records.* Each custodian of records referred to in paragraphs (a) and (b) shall, upon request by FRA or an FRA-certified State inspector, make available for inspection and duplication within 7 days, any records referred to in paragraphs (a) and (b) of this section.

(d) *Third party storage of records.* Each custodian of records referred to in paragraphs (a) and (b) of this section may delegate storage duties to a third party; however, the custodian retains all responsibility for compliance with this section.

■ 12. Add new § 229.217 to Subpart D to read as follows:

§ 229.217 Fuel tank.

(a) *External fuel tanks.* Locomotives equipped with external fuel tanks shall, at a minimum, comply with the requirements of AAR S–5506, ''Performance Requirements for Diesel Electric Locomotive Fuel Tanks'' (October 1, 2001), except for section 4.4. This paragraph does not apply to locomotives subject to the fuel tank safety requirements of § 238.223 or § 238.423 of this chapter. The Director of the Federal Register approves incorporation by reference of the AAR S–5506, ''Performance Requirements for Diesel Electric Locomotive Fuel Tanks'' (October 1, 2001) in this section in accordance with 5 U.S.C. 552(a) and 1 CFR part 51. You may obtain a copy of the incorporated standard from the Association of American Railroads, 50 F Street NW., Washington, DC 20001. You may inspect a copy of the incorporated standard at the Federal Railroad Administration, Docket Clerk, 1120 Vermont Ave., NW. Suite 7000, Washington, DC 20590 or at the National Archives and Records Administration (NARA). For more information on the availability of this material at NARA, call 202–741–6030, or go to *http://www.archives.gov/federal_register/code_of_federal_regulations/ibr_locations.html.*

(b) *Internal fuel tanks.* Locomotives equipped with internal fuel tanks shall, at a minimum, comply with the requirements of § 238.223(b) of this chapter.

■ 13. Amend Appendix B to part 229 by adding the heading for Subpart D and by adding entries for sections 229.205, 229.206, 229.213, 229.215 and 229.217 to read as follows:

Appendix B to Part 229—Schedule of Civil Penalties [1]

Section	Violation	Willful violation
* * * * * * *		
Subpart D—Locomotive Crashworthiness Design Requirements		
229.205 General requirements:		
(a)(1) Wide-nose locomotive not designed in compliance with AAR S–580–2005	$5,000	$7,500
(2) Wide-nose locomotive not designed in compliance with new approved design standard	5,000	7,500
(3) Wide-nose locomotive not designed in compliance with alternate approved design standard	5,000	7,500
(b) Monocoque or semi-monocoque locomotive not in compliance with design requirements	5,000	7,500
(c) Narrow-nose not in compliance with design requirements	5,000	7,500
229.206 Design requirements:		
Locomotive fails to meet—		
(1) Emergency egress requirements	2,500	5,000
(2) Emergency interior lighting requirements	2,500	5,000

[1] A penalty may be assessed against an individual only for a willful violation. Generally, when two or more violations of these regulations are discovered with respect to a single locomotive that is used by a railroad, the appropriate penalties set forth above are aggregated up to a maximum of $10,000 per day. However, a failure to perform, with respect to a particular locomotive, any of the inspections and tests required under subpart B of this part will be treated as a violation separate and distinct from, and in addition to, any substantive violative conditions found on that locomotive. Moreover, the Administrator reserves the right to assess a penalty of up to $27,000 for any violation where circumstances warrant. See 49 CFR part 209, appendix A. Failure to observe any condition for movement set forth in § 229.9 will deprive the railroad of the benefit of the movement-for-repair provision and make the railroad and any responsible individuals liable for penalty under the particular regulatory section(s) concerning substantive defect(s) present on the locomotive at the time of movement. Failure to comply with § 229.19 will result in a lapse of any affected waiver.

Section	Violation	Willful violation
(3) Interior configuration requirements	2,500	5,000
229.213 Locomotive manufacturing information:		
(a) Failure to retain required information	2,500	5,000
(b) Failure to produce required information	2,500	5,000
229.215 Retention and inspection of designs:		
(a) Failure to retain required design records	2,500	5,000
(b) Failure to retain required repair or modification records	2,500	5,000
(c) Failure to make records available when requested	2,500	5,000
229.217 Fuel tank:		
(a) External fuel tank	5,000	7,500
(b) Internal fuel tank	5,000	7,500

■ 14. Add Appendix E to part 229 to read as follows:

Appendix E to Part 229—Performance Criteria for Locomotive Crashworthiness

This appendix provides performance criteria for the crashworthiness evaluation of alternative locomotive designs, and design standards for wide-nosed locomotives and any for other locomotive, except monocoque/semi-monocoque design locomotives and narrow-nose design locomotives. Each of the following criteria describes a collision scenario and a given performance measure for protection provided to cab occupants, normally through structural design. Demonstration that these performance criteria have been satisfied may be accomplished through any of the methods described in § 229.205. This performance criteria is intended to prevent intrusion into the cab seating area occupied by crews. This excludes inner and outer vestibule areas.

(a) *Front end structure (collision posts).*—(1) *Objective.* The front end structure of the locomotive must withstand a frontal impact with a proxy object which is intended to simulate lading carried by a heavy highway vehicle (see figure 1).

(2) *Proxy object characteristics and orientation.* The proxy object must have the following characteristics: Cylindrical shape; 48-inch diameter; 126-inch length; 65,000 pound minimum weight; and uniform density. The longitudinal axis of the proxy object must be oriented horizontally perpendicular to the longitudinal axis of the locomotive.

(3) *Impact and result.* The front end structure of the locomotive must withstand a 30-mph impact with the proxy object resulting in no more than 24 inches of crush along the longitudinal axis of the locomotive, measured from the foremost point on the collision post, and with no more than 12 inches of intrusion into the cab. The center of impact must be 30 inches above the top of the locomotive underframe along the longitudinal centerline of the locomotive.

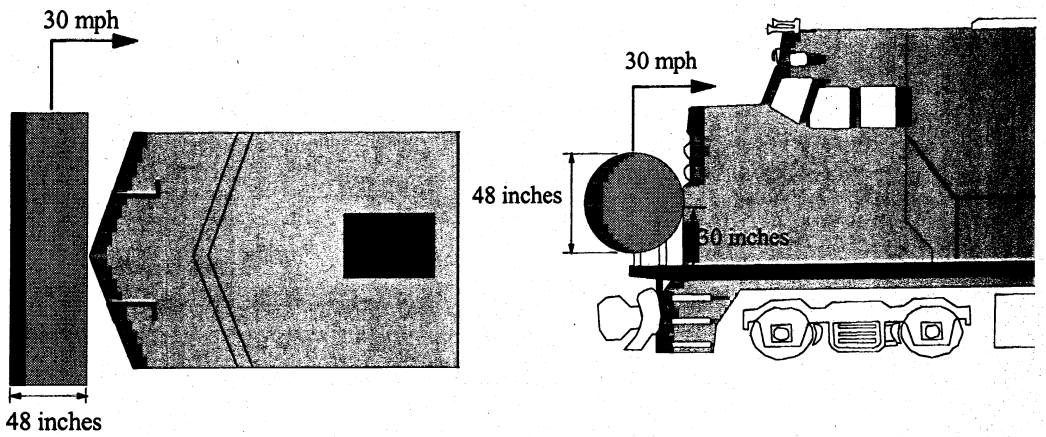

Figure 1. Schematic of Front End Structure (Collision Posts) Impact

(b) *Front end structure (short hood)*

(1) *Objective.* The front end structure of the locomotive must withstand an oblique impact with a proxy object intended to simulate an intermodal container offset from a freight car on an adjacent parallel track (see figure 2).

(2) *Proxy object characteristics and orientation.* The proxy object must have the following characteristics: Block shape; 36-inch width; 60-inch height; 108-inch length; corners having 3-inch radii corners; 65,000 pound minimum weight; and uniform density. The longitudinal axis of the proxy object must be oriented parallel to the longitudinal axis of the locomotive. At impact, the proxy object must be oriented such that there are 12 inches of lateral overlap and 30 inches from the bottom of the proxy object to the top of the locomotive underframe.

(3) *Impact and results.* The front end structure of the locomotive must withstand a 30-mph impact with the proxy object resulting in no more than 60 inches of crush along the longitudinal axis of the locomotive, measured from the first point of contact on the short hood post, and with no more than 12 inches of intrusion into the cab.

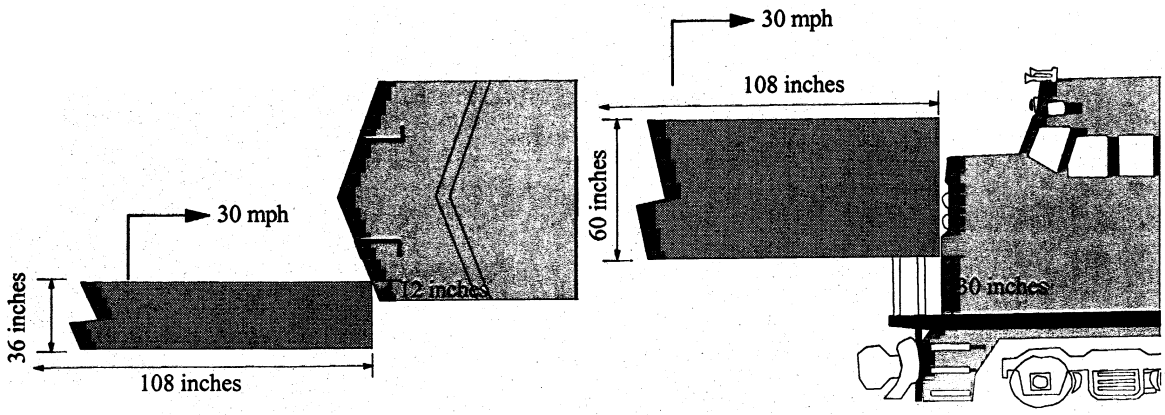

Figure 2. Schematic of Front End Structure (Short Hood) Offset Impact

PART 238—[AMENDED]

■ 15. The authority citation for part 238 continues to read as follows:

Authority: 49 U.S.C. 20103, 20107, 20133, 20141, 20302–20303, 20306, 20701–20702, 21301–21302, 21304; 28 U.S.C. 2461, note; 49 CFR 1.49.

■ 16. Amend § 238.5 by revising the definitions of ''fuel tank, external'' and ''fuel tank, internal'' to read as follows:

§ 238.5 Definitions.

* * * * *

Fuel tank, external means a fuel containment vessel that extends outside the car body structure of a locomotive.

Fuel tank, internal means a fuel containment vessel that does not extend outside the car body structure of a locomotive.

* * * * *

■ 17. Amend § 238.201 by revising paragraph (a)(2) to read as follows:

§ 238.201 Scope/alternative compliance.

(a) * * *

(2) The structural standards of this subpart (§ 238.203—static end strength; § 238.205—anti-climbing mechanism; § 238.207—link between coupling mechanism and car body; § 238.209—forward-facing end structure of locomotives; § 238.211—collision posts; § 238.213—corner posts; § 238.215—rollover strength; § 238.217—side structure; § 238.219—truck-to-car-body attachment; and § 238.223—locomotive fuel tanks) do not apply to passenger equipment if used exclusively on a rail line:

(i) With no public highway-rail grade crossings;

(ii) On which no freight operations occur at any time;

(iii) On which only passenger equipment of compatible design is utilized; and

(iv) On which trains operate at speeds not exceeding 79 mph. Any such passenger equipment remains subject to the requirements of § 229.141 of this chapter, as applicable.

* * * * *

■ 18. Amend paragraph (b) of § 238.205 by adding the following sentence at the end of the paragraph to read as follows:

§ 238.205 Anti-climbing mechanism.

* * * * *

(b) * * * Locomotives required to be constructed in accordance with subpart D of part 229 of this chapter shall have an anti-climbing mechanism in compliance with § 229.206 of this chapter, in lieu of the requirements of this paragraph.

■ 19. Amend paragraph (f) of § 238.233 by adding the following sentence at the beginning of the paragraph to read as follows:

§ 238.233 Interior fitting and surfaces.

* * * * *

(f) Locomotives required to be constructed in accordance with subpart D of part 229 of this chapter shall have cab seat attachment in compliance with § 229.206 of this chapter, in lieu of the following requirements of this paragraph. * * *

* * * * *

Issued in Washington, DC, on June 12, 2006.

Joseph H. Boardman,

Federal Railroad Administrator.

[FR Doc. 06–5667 Filed 6–27–06; 8:45 am]

BILLING CODE 4910–06–P

Federal Register

Wednesday,
June 28, 2006

Part III

Department of Labor

Office of the Secretary

Department of Labor Employment of Individuals With Disabilities and Veterans With Disabilities; Notice

DEPARTMENT OF LABOR

Office of the Secretary

[Secretary's Order—15–2006]

Department of Labor Employment of Individuals With Disabilities and Veterans With Disabilities

1. Purpose

To prescribe Department of Labor (DOL) policy and responsibilities with regard to employment of individuals with disabilities and veterans with disabilities.

2. Directives Affected

Secretary's Order 9–78 is canceled.

3. Background

Section 501 of the Rehabilitation Act of 1973 (Pub. L. 93–112, Title V), as amended (Pub. L. 93–516), requires the development and implementation of affirmative employment programs for the hiring, placement, and advancement of individuals with disabilities, as well as annual reports. Further, Executive Order 13164 requires Federal agencies to establish written procedures to facilitate the provision of reasonable accommodation for individuals with disabilities so that they can enjoy the benefits and privileges of employment equal to those enjoyed by employees without disabilities.

4. Policy

It is the policy of the Department to encourage the use of the Government-wide special hiring authorities, as provided for by the Office of Personnel Management, to employ and advance in employment qualified persons with disabilities and qualified veterans with disabilities. The Department shall also ensure that the special needs of these employees are met so they may have equal access to the privileges and benefits of the workplace.

5. Employment of Individuals With Disabilities and Veterans With Disabilities

The goal of the Department is to ensure that qualified individuals with disabilities, including veterans with disabilities and employees who become disabled, have a full measure of opportunities in hiring, placement, retention, and advancement in employment. This goal is an integral part of the ongoing personnel management program, and is to be accomplished by the employment of qualified persons with disabilities in a broad range of grade levels and in a representative variety of occupational series with career advancement opportunities commensurate with those for all employees within an organization.

6. Responsibilities

A. *The Assistant Secretary for Administration and Management* has responsibility for the overall administration of the Department's programs for employment of qualified individuals with disabilities, including veterans with disabilities; the issuance of departmental directives in support of these programs; and oversight of DOL Agency responsibilities for effective implementation of DOL policies. Additionally, the Office of the Assistant Secretary for Administration and Management serves as the primary reporting agency on DOL affirmative employment programs for qualified individuals with disabilities and veterans with disabilities.

B. *The Office of Disability Employment Policy* is available to provide guidance and assistance for DOL initiatives to further eliminate barriers to employment of qualified persons with disabilities.

C. *The Veterans' Employment and Training Service* is available to provide guidance and assistance for DOL initiatives to further eliminate barriers to the employment of qualified veterans with disabilities.

D. *DOL Agency Heads and Regional Administrators—Office of the Assistant Secretary for Administration and Management* are responsible for effectuating affirmative employment initiatives in their respective Agencies; submitting statistical, evaluative, and narrative reports to OASAM in support of Congressionally-mandated reports; and support and implementation of the Department's policy within their respective Agencies, including but not limited to issuing policy directives to managers and supervisors expressing strong support for the employment of qualified individuals with disabilities, including veterans with disabilities; and conducting recruitment activities through their Human Resource Offices to locate qualified individuals with disabilities and veterans with disabilities.

E. *The Solicitor of Labor* is responsible for providing legal advice and technical assistance to all officials of the Department who are responsible for implementing DOL policy regarding the employment of qualified persons with disabilities, including veterans with disabilities.

7. Effective Date

This Order is effective immediately.

Dated: June 20, 2006.

Elaine L. Chao,

Secretary of Labor.

[FR Doc. 06–5741 Filed 6–27–06; 8:45 am]

BILLING CODE 4510–23–P

Federal Register

Wednesday,
June 28, 2006

Part IV

Department of Defense

General Services Administration

National Aeronautics and Space Administration

48 CFR Chapter 1 et al.

Federal Acquisition Regulation; Final Rules

DEPARTMENT OF DEFENSE

GENERAL SERVICES ADMINISTRATION

NATIONAL AERONAUTICS AND SPACE ADMINISTRATION

48 CFR Chapter 1

Docket FAR—2006–0023

Federal Acquisition Regulation; Federal Acquisition Circular 2005–10; Introduction

AGENCIES: Department of Defense (DoD), General Services Administration (GSA), and National Aeronautics and Space Administration (NASA).

ACTION: Summary presentation of final and interim rules, and technical amendments and corrections.

SUMMARY: This document summarizes the Federal Acquisition Regulation (FAR) rules agreed to by the Civilian Agency Acquisition Council and the Defense Acquisition Regulations Council in this Federal Acquisition Circular (FAC) 2005–10. A companion document, the Small Entity Compliance Guide (SECG), follows this FAC. The FAC, including the SECG, is available via the Internet at *http://www.acquisition.gov/far*.

DATES: For effective dates and comment dates, see separate documents which follow.

FOR FURTHER INFORMATION CONTACT For clarification of content, contact the analyst whose name appears in the table below in relation to each FAR case or subject area. Please cite FAC 2005–10 and specific FAR case number(s). Interested parties may also visit our Web site at *http://www.acquisition.gov/far*. For information pertaining to status or publication schedules, contact the FAR Secretariat at (202) 501–4755.

Item	Subject	FAR case	Analyst
I	Central Contractor Registration —Taxpayer Identification Number (TIN) Validation	2005–007	Jackson.
II	Procedures Related to Procurement Center Representatives	2006–003	Cundiff.
III	Submission of Cost or Pricing Data on Noncommercial Modifications of Commercial Items	2004–035	Olson.
IV	Implementation of Wage Determinations OnLine (WDOL) (Interim)	2005–033	Sochon.
V	Free Trade Agreements—El Salvador, Honduras, and Nicaragua (Interim)	2006–006	Sochon.
VI	Buy-Back of Assets	2004–014	Olson.
VII	Technical Amendments		

SUPPLEMENTARY INFORMATION: Summaries for each FAR rule follow. For the actual revisions and/or amendments to these FAR cases, refer to the specific item number and subject set forth in the documents following these item summaries.

FAC 2005–10 amends the FAR as specified below:

Item I—Central Contractor Registration—Taxpayer Identification Number (TIN) Validation (FAR Case 2005–007)

The rule adds the process of the government validating a Central Contractor Registration (CCR) registrant's taxpayer identification number (TIN) with the Internal Revenue Service (IRS) to improve the quality of data in the CCR and the federal procurement system. Additionally, the rule removes outdated language requiring modifications of contracts prior to December 31, 2003, regarding CCR.

Item II—Procedures Related to Procurement Center Representatives (FAR Case 2006–003)

This final rule amends the Federal Acquisition Regulation (FAR) to provide internal procedures to cover situations when the FAR requires interaction with a procurement center representative and one has not been assigned to the procuring activity or contract administration office. It primarily impacts contracting officers and procurement center representatives.

Item III—Submission of Cost or Pricing Data on Noncommercial Modifications of Commercial Items (FAR Case 2004–035)

This final rule amends the interim rule issued in FAC 2005–004 and implements an amendment to 10 U.S.C. 2306a. The policy requires that the exception from the requirement to obtain certified cost or pricing data for a commercial item does not apply to noncommercial modifications of a commercial item that are expected to cost, in the aggregate, more than $500,000 or 5 percent of the total price of the contract, whichever is greater. Section 818 of Public Law 108–375, the Ronald W. Reagan National Defense Authorization Act of Fiscal Year 2005 applies to offers submitted, and to modifications of contracts or subcontracts made, on or after June 1, 2005. This new policy results from a statute which changed 10 U.S.C. 2306a. 10 U.S.C. 2306a applies only to contracts or task or delivery orders funded by DoD, NASA, and the Coast Guard. The new policy does, however, also apply to contracts awarded or task or delivery orders placed on behalf of DoD, NASA, or the Coast Guard by an official of the United States outside of those agencies, because the statutory requirement of Section 818 applies to the funds provided by DoD, NASA, or the Coast Guard.

The change to the interim rule clarifies the policy to ensure it is applied properly. The threshold in the rule applies to an instant contract action, not to the total value of all contract actions and, as applicable to subcontractors, the threshold applies to the value of the subcontract, not the value of the prime contract.

Item IV—Implementation of Wage Determinations OnLine (WDOL) (FAR Case 2005–033) (Interim)

This interim rule implements the Department of Labor (DOL) Wage Determinations OnLine (WDOL) internet website as the source for Federal contracting agencies to obtain wage determinations issued by the DOL for service contracts subject to the McNamara-O'Hara Service Contract Act (SCA) and for construction contracts subject to the Davis-Bacon Act (DBA). The rule amends the FAR to direct Federal contracting agencies to obtain DBA and SCA wage determinations from the WDOL website.

The Contracting Officer (CO) will be able to check the WDOL website (*http://www.wdol.gov*) to find the applicable wage determination for a contract action subject to the SCA or DBA. If the WDOL database does not contain the applicable wage determination for a SCA contract action, the CO must use the e98 process to request a wage determination from DOL. The e98 means a DOL approved electronic application, (available at *http://www.wdol.gov*), whereby a contacting officer submits pertinent information to the DOL and requests a wage determination directly from the Wage and Hour Division. With regard to DBA requirements, if the WDOL

database does not contain the applicable wage determination for a DBA contract action, the CO must request a wage determination by submitting SF–308 to DOL.

The WDOL and e98 processes replace the paper Standard Forms 98 and 98a. In addition, Standard Forms 99, 98, and 98a are deleted from FAR Part 53. This interim rule also incorporates new geographical jurisdictions for DOL's Wage and Hour Regional Offices and eliminates FAR references to the Government Printing Office (GPO) publication of general wage determinations.

Item V—Free Trade Agreements—El Salvador, Honduras, and Nicaragua (FAR Case 2006–006) (Interim)

This interim rule allows contracting officers to purchase the goods and services of El Salvador, Honduras, and Nicaragua without application of the Buy American Act, if the acquisition is subject to the Free Trade Agreements. The U.S. Trade Representative negotiated the Dominican Republic—Central America-United States Free Trade Agreement with Costa Rica, El Salvador, Guatemala, Honduras, Nicaragua, and the Dominican Republic. However, the agreements will not all take effect at the same time. This agreement with El Salvador, Honduras, and Nicaragua joins the North American Free Trade Agreement (NAFTA) and the Australia, Chile, Morocco, and Singapore Free Trade Agreements which are already in the FAR. The threshold for applicability of the Dominican Republic—Central America—United States Free Trade Agreement is $64,786 for supplies and services (the same as other Free Trade Agreements to date except Morocco and Canada) and $7,407,000 for construction (the same as all other Free Trade Agreements to date except NAFTA).

Item VI—Buy-Back of Assets (FAR Case 2004–014)

This final rule amends the Federal Acquisition Regulation (FAR) contract cost principle for depreciation costs. The final rule adds language which addresses the allowability of depreciation costs of reacquired assets involved in a sale and leaseback arrangement.

Item VII—Technical Amendments

Editorial changes are made at FAR 8.714, 33.102, and52.225–11 in order to update references.

Dated: June 20, 2006.

Ralph De Stefano,

Director, Contract Policy Division.

Federal Acquisition Circular

Federal Acquisition Circular (FAC) 2005-10 is issued under the authority of the Secretary of Defense, the Administrator of General Services, and the Administrator for the National Aeronautics and Space Administration.

Unless otherwise specified, all Federal Acquisition Regulation (FAR) and other directive material contained in FAC 2005-10 is effective, July 28, 2006 except for Items IV, V, and VII which are effective June 28, 2006.

Dated: June 19, 2006.

Shay D. Assad,

Director, Defense Procurement and Acquisition Policy.

Dated: June 20, 2006.

Roger D. Waldron,

Acting Senior Procurement Executive, Office of the Chief Acquisition Officer, General Services Administration.

Dated: June 19, 2006.

Tom Luedtke,

Assistant Administrator for Procurement, National Aeronautics and Space Administration.

[FR Doc. 06–5712 Filed 6–27–06; 8:45 am]

BILLING CODE 6820–EP–S

DEPARTMENT OF DEFENSE

GENERAL SERVICES ADMINISTRATION

NATIONAL AERONAUTICS AND SPACE ADMINISTRATION

48 CFR Parts 2, 4, and 52

[FAC 2005–10; FAR Case 2005–007; Item I; Docket 2006–0020, Sequence 9]

RIN 9000–AK33

Federal Acquisition Regulation; FAR Case 2005–007, Central Contractor Registration—Taxpayer Identification Number (TIN) Validation

AGENCIES: Department of Defense (DoD), General Services Administration (GSA), and National Aeronautics and Space Administration (NASA).

ACTION: Final rule.

SUMMARY: The Civilian Agency Acquisition Council and the Defense Acquisition Regulations Council (Councils) have agreed on a final rule amending the Federal Acquisition Regulation (FAR) to include the process of validating a Central Contractor Registration (CCR) registrant's taxpayer identification number (TIN) with the Internal Revenue Service (IRS) to improve the quality of data in the Federal procurement system. Additionally, the amendment removes outdated language requiring modifications of contracts prior to December 31, 2003, regarding CCR.

DATES: *Effective Date:* July 28, 2006.

FOR FURTHER INFORMATION CONTACT: For clarification of content, contact Mr. Michael O. Jackson, Procurement Analyst, at (202) 208–4949. Please cite FAC 2005–10, FAR case 2005–007. For information pertaining to status or publication schedules, contact the FAR Secretariat at (202) 501–4755.

SUPPLEMENTARY INFORMATION:

A. Background

Vendor registration in the CCR as a pre-requisite for receiving a contract has been required in the Department of Defense since 1998, and in civilian agencies since 2003. Since CCR's inception, validation of a registrant's TIN with the IRS has been contemplated in order to improve the quality of data throughout the Federal procurement system. This capability, although actively pursued, was never implemented as the Internal Revenue Code (I.R.C.) restricted disclosure of TINs without the taxpayer's consent, which due to technology at the time, would have been costly and inefficient to pursue. However, in its Fall 2004 ''Report to Senate Committee on Governmental Affairs Permanent Subcommittee on Investigations,'' the Federal Contractor Tax Compliance Task Force (which included the Office of Management and Budget, the Department of Treasury, the Department of Defense, the General Services Administration, the Department of Justice, and the IRS) recommended that ''... a consent-based TIN validation under I.R.C. § 6103 should be instituted.'' The capability for an event driven, near real-time, or real-time, web-based solution integrating the CCR with an IRS validation is now possible due to advances in technology. The Task Force recommended updating the FAR to specifically identify the validation of the TIN as a part of CCR registration. In August 2005, a computer matching agreement was established between the IRS, as manager of the TIN database; GSA, as manager of the Integrated Acquisition Environment (IAE) Federal eGov initiative; and DOD, as executive agent for CCR.

Additionally, FAR Subpart 4.11, Central Contractor Registration, contains language that was included when this subpart was implemented in the FAR in

2003. This outdated language required modifications of contracts by December 31, 2003, to include CCR registration requirements. As this date is past, the case removes the associated language.

This final rule amends the Federal Acquisition Regulation by—

1. Modifying Subpart 2.101 to indicate that the validation requirement for ''registered in CCR'' includes TIN matching.

2. Removing FAR section 4.1103(a)(3), (a)(3)(i)-(ii) and a part of 4.1104 to remove the language requiring action by December 31, 2003.

3. Adding detail to FAR 52.204–7, Central Contractor Registration, to specifically identify validation of the TIN as a part of the definition ''Registered in the CCR Database,'' and to indicate that consent is part of that process.

4. Removing Alternate I to FAR 52.204–7, Central Contractor Registration.

DoD, GSA, and NASA published a proposed rule in the **Federal Register** at 70 FR 60782, October 19, 2005. The Councils received two public comments in response to the proposed rule.

1. *Comment:* One commenter indicated that the language in the preamble under the Summary paragraph should read: ''... CCR) registrant's taxpayer identification number with the Internal Revenue Service to improve the quality of data in both the CCR and the Federal Procurement Data System—Next Generation (FPDS-NG'')

Vice the original language:

''... CCR) registrant's taxpayer identification number with the Internal Revenue Service to improve data accuracy in the Federal procurement system.''

Disposition: The Councils agree that the rule improves the quality of data. For clarification, FPDS-NG does not retain the Taxpayer Identification Number (TIN), and the validation process does not involve the FPDS-NG system.

2. *Comment:* One commenter suggested that the General Services Administration include a mechanism to be used in the event that an employer is unable to receive validation for its taxpayer identification number (TIN) during the Central Contractor Registration (CCR) process. He stated a conditional registration may be in order until the contractor in concert with the GSA and IRS can determine the error. If a contractor is unable to obtain the TIN validation, a process for resolving the matter should be laid out for them online. A conditional registration should be allowed for participation in a bid so long as the contractor can show the TIN was valid at the time it applied for registration. Due to potential delays involving the interaction of two major agency computer systems, it seems reasonable that some safeguard should be in place for contractors, especially first time registrants that are likely to be smaller firms. The commenter asked that this issue be addressed by the Councils in its final rulemaking.

Disposition: The intent of the rule is to make sure that the TIN an entity places in CCR is the same one that is designated by the IRS. A new CCR registration takes approximately 48 hours to process. Vendors with questions or comments relating to TIN matching or the registration process may contact the CCR Assistance Center at *http://www.ccr.gov/help.asp* or 888–227–2423. Vendors with general questions relating to TINs, or questions relating to a specific TIN, should contact the IRS. The Council will suggest the resolution of registration delays due to TIN matching to be addressed online in the CCR FAQs. While contractors may not receive an award without a valid CCR registration (see FAR 4.1102(a)), they may participate in the bid process, which the Councils deem to be an adequate mechanism.

This is not a significant regulatory action and, therefore, was not subject to review under Section 6(b) of Executive Order 12866, Regulatory Planning and Review, dated September 30, 1993. This rule is not a major rule under 5 U.S.C. 804.

B. Regulatory Flexibility Act

The Department of Defense, the General Services Administration, and the National Aeronautics and Space Administration certify that this final rule will not have a significant economic impact on a substantial number of small entities within the meaning of the Regulatory Flexibility Act, 5 U.S.C. 601, *et seq.*, as no new requirements are being placed on the vendor community. No comments on this issue were received from small business concerns or other interested parties.

C. Paperwork Reduction Act

The Paperwork Reduction Act does not apply because the changes to the FAR do not impose information collection requirements that require the approval of the Office of Management and Budget under 44 U.S.C. 3501, *et seq.*

List of Subjects in 48 CFR Parts 2, 4, and 52

Government procurement.

Dated: June 20, 2006.

Ralph De Stefano,

Director, Contract Policy Division.

■ Therefore, DoD, GSA, and NASA amend 48 CFR parts 2, 4, and 52 as set forth below:

■ 1. The authority citation for 48 CFR parts 2, 4, and 52 continues to read as follows:

Authority: 40 U.S.C. 121(c); 10 U.S.C. chapter 137; and 42 U.S.C. 2473(c).

PART 2—DEFINITIONS OF WORDS AND TERMS

■ 2. Amend section 2.101 in paragraph (b)(2) by revising paragraph (2) of the definition ''Registered in the CCR database'' to read as follows:

2.101 Definitions.

* * * * *

(b) * * *

(2) * * *

Registered in the CCR database means that—

(1) * * *

(2) The Government has validated all mandatory data fields, to include validation of the Taxpayer Identification Number (TIN) with the Internal Revenue Service (IRS), and has marked the record ''Active''. The contractor will be required to provide consent for TIN validation to the Government as a part of the CCR registration process.

* * * * *

PART 4—ADMINISTRATIVE MATTERS

■ 3. Amend section 4.1103 by—

■ a. Revising paragraph (a)(1);

■ b. Removing paragraph (a)(3);

■ c. Redesignating paragraph (b) as paragraph (a)(3); and

■ d. Redesignating paragraphs (c), (d), and (e) as paragraphs (b), (c), and (d), respectively.

■ The revised text reads as follows:

4.1103 Procedures.

(a) * * *

(1) Shall verify that the prospective contractor is registered in the CCR database (see paragraph (b) of this section) before awarding a contract or agreement. Contracting officers are encouraged to check the CCR early in the acquisition process, after the competitive range has been established, and then communicate to the unregistered offerors that they must register;

* * * * *

4.1104 [Amended]

■ 4. Amend section 4.1104 by removing the last sentence.

PART 52—SOLICITATION PROVISIONS AND CONTRACT CLAUSES

■ 5. Amend section 52.204–7 by—
■ a. Revising the date of the clause;
■ b. Revising paragraph (a)(2) of the definition ''Registered in the CCR database''; and
■ c. Removing Alternate I.
■ The revised and added text reads as follows:

52.204–7 Central Contractor Registration.

* * * * *

CENTRAL CONTRACTOR REGISTRATION (JUL 2006)

(a) * * *

Registered in the CCR database means that—

(1) * * *

(2) The Government has validated all mandatory data fields, to include validation of the Taxpayer Identification Number (TIN) with the Internal Revenue Service (IRS), and has marked the record ''Active''. The Contractor will be required to provide consent for TIN validation to the Government as a part of the CCR registration process.

* * * * *

[FR Doc. 06–5711 Filed 6–27–06; 8:45 am]

BILLING CODE 6820–EP–S

DEPARTMENT OF DEFENSE

GENERAL SERVICES ADMINISTRATION

NATIONAL AERONAUTICS AND SPACE ADMINISTRATION

48 CFR Parts 10 and 19

[FAC 2005–10; FAR Case 2006–003; Item II; Docket 2006–0020, Sequence 12]

Federal Acquisition Regulation; FAR Case 2006–003, Procedures Related to Procurement Center Representatives

AGENCIES: Department of Defense (DoD), General Services Administration (GSA), and National Aeronautics and Space Administration (NASA).

ACTION: Final rule.

SUMMARY: The Civilian Agency Acquisition Council and the Defense Acquisition Regulations Council (Councils) have agreed on a final rule amending the Federal Acquisition Regulation (FAR) to provide internal procedures to cover situations when the FAR requires interaction with a procurement center representative and one has not been assigned to the procuring activity or contract administration office.

DATES: *Effective Date:* July 28, 2006.

FOR FURTHER INFORMATION CONTACT: For clarification of content, contact Ms. Rhonda Cundiff, Procurement Analyst, at (202) 501–0044. Please cite FAC 2005–10, FAR case 2006–003. For information pertaining to status or publication schedules, contact the FAR Secretariat at (202) 501–4755.

SUPPLEMENTARY INFORMATION:

A. Background

This final rule amends the Federal Acquisition Regulation to provide internal procedures to cover situations when the FAR requires interaction with a Small Business Administration procurement center representative and one has not been assigned to the procuring activity or contract administration office.

This is not a significant regulatory action and, therefore, was not subject to review under Section 6(b) of Executive Order 12866, Regulatory Planning and Review, dated September 30, 1993. This rule is not a major rule under 5 U.S.C. 804.

B. Regulatory Flexibility Act

The Regulatory Flexibility Act does not apply to this rule. This final rule does not constitute a significant FAR revision within the meaning of FAR 1.501 and Public Law 98–577, and publication for public comments is not required. However, the Councils will consider comments from small entities concerning the affected FAR Parts 10 and 19 in accordance with 5 U.S.C. 610. Interested parties must submit such comments separately and should cite 5 U.S.C. 601, *et seq.* (FAC 2005–10, FAR case 2006–003), in correspondence.

C. Paperwork Reduction Act

The Paperwork Reduction Act does not apply because the changes to the FAR do not impose information collection requirements that require the approval of the Office of Management and Budget under 44 U.S.C. 3501, *et seq.*

List of Subjects in 48 CFR Parts 10 and 19

Government procurement.

Dated: June 20, 2006.

Ralph De Stefano,

Director, Contract Policy Division.

■ Therefore, DoD, GSA, and NASA amend 48 CFR parts 10 and 19 as set forth below:

■ 1. The authority citation for 48 CFR parts 10 and 19 continues to read as follows:

Authority: 40 U.S.C. 121(c); 10 U.S.C. chapter 137; and 42 U.S.C. 2473(c).

PART 10—MARKET RESEARCH

■ 2. Amend section 10.001 by revising paragraph (c)(1) to read as follows:

10.001 Policy.

* * * * *

(c) * * *

(1) When performing market research, should consult with the local Small Business Administration procurement center representative (PCR). If a PCR is not assigned, see 19.402 (a); and

* * * * *

PART 19—SMALL BUSINESS PROGRAMS

■ 3. Amend section 19.201 by revising the introductory text of paragraph (d)(5) to read as follows:

19.201 General Policy.

* * * * *

(d) * * *

(5) Work with the SBA procurement center representative (or, if a procurement center representative is not assigned, see 19.402(a)) to—

* * * * *

■ 4. Amend section 19.202–1 by revising the introductory text of paragraph (e)(1) and paragraph (e)(4) to read as follows:

19.202–1 Encouraging small business participation in acquisitions.

* * * * *

(e)(1) Provide a copy of the proposed acquisition package to the SBA procurement center representative (or, if a procurement center representative is not assigned, see 19.402(a)) at least 30 days prior to the issuance of the solicitation if—

* * * * *

(4) If the contracting officer rejects the SBA representative's recommendation made in accordance with 19.402(c)(2), the contracting officer shall document the basis for the rejection and notify the SBA representative in accordance with 19.505.

■ 5. Amend section 19.202–2 by revising the last sentence in paragraph (a) to read as follows:

19.202–2 Locating small business sources.

* * * * *

(a) * * * This effort should include contacting the SBA procurement center representative (or, if a procurement center representative is not assigned, see 19.402(a)).

* * * * *

■ 6. Amend section 19.402 by redesignating paragraph (a) as (a)(1); adding a new paragraph (a)(2); revising paragraph (b); and revising the second

sentence of paragraph (c)(2) to read as follows:

19.402 Small Business Administration procurement center representatives.

(a) * * *

(2) If a SBA procurement center representative is not assigned to the procuring activity or contract administration office, contact the SBA Office of Government Contracting Area Office serving the area in which the procuring activity is located for assistance in carrying out SBA policies and programs. See *http://www.sba.gov/GC/pcr.html* for the location of the SBA office servicing the activity.

(b) Upon their request and subject to applicable acquisition and security regulations, contracting officers shall give SBA procurement center representatives (or, if a procurement center representative is not assigned, see paragraph (a) of this section) access to all reasonably obtainable contract information that is directly pertinent to their official duties.

(c) * * *

(2) * * * If the SBA procurement center representative (or, if a procurement center representative is not assigned, see paragraph (a) of this section) believes that the acquisition, as proposed, makes it unlikely that small businesses can compete for the prime contract, the representative shall recommend any alternate contracting method that the representative reasonably believes will increase small business prime contracting opportunities. * * *

* * * * *

■ 7. Amend section 19.501 by revising the last sentence in paragraph (b) and paragraph (f) to read as follows:

19.501 General.

* * * * *

(b) * * * A joint determination is one that is recommended by the Small Business Administration (SBA) procurement center representative (or, if a procurement center representative is not assigned, see 19.402(a)) and concurred in by the contracting officer.

* * * * *

(f) At the request of an SBA procurement center representative, (or, if a procurement center representative is not assigned, see 19.402(a)) the contracting officer shall make available for review at the contracting office (to the extent of the SBA representative's security clearance) all proposed acquisitions in excess of the micro-purchase threshold that have not been unilaterally set aside for small business.

* * * * *

■ 8. Amend section 19.503 by revising the last sentence in paragraph (d) to read as follows:

19.503 Setting aside a class of acquisitions for small business.

* * * * *

(d) * * * If there are any changes of such a material nature as to result in probable payment of more than a fair market price by the Government or in a change in the capability of small business concerns to satisfy the requirements, the contracting officer may withdraw or modify (see 19.506(a)) the unilateral or joint set-aside by giving written notice to the SBA procurement center representative (or, if a procurement center representative is not assigned, see 19.402(a)) stating the reasons.

■ 9. Amend section 19.505 by revising paragraphs (a), (b), and (c)(1) to read as follows:

19.505 Rejecting Small Business Administration recommendations.

(a) If the contracting officer rejects a recommendation of the SBA procurement center representative (or, if a procurement center representative is not assigned, see 19.402(a)) or breakout procurement center representative, written notice shall be furnished to the appropriate SBA representative within 5 working days of the contracting officer's receipt of the recommendation.

(b) The SBA procurement center representative (or, if a procurement center representative is not assigned, see 19.402(a)) may appeal the contracting officer's rejection to the head of the contracting activity (or designee) within 2 working days after receiving the notice. The head of the contracting activity (or designee) shall render a decision in writing, and provide it to the SBA representative within 7 working days. Pending issuance of a decision to the SBA representative, the contracting officer shall suspend action on the acquisition.

(c) * * *

(1) Within 2 working days, the SBA procurement center representative (or, if a procurement center representative is not assigned, see 19.402(a)) may request the contracting officer to suspend action on the acquisition until the SBA Administrator appeals to the agency head (see paragraph (f) of this section); and

* * * * *

■ 10. Amend section 19.506 by revising the second sentence in paragraph (a) and paragraph (b) to read as follows:

19.506 Withdrawing or modifying small business set-asides.

(a) * * * The contracting officer shall initiate a withdrawal of an individual small business set-aside by giving written notice to the agency small business specialist and the SBA procurement center representative (or, if a procurement center representative is not assigned, see 19.402(a)) stating the reasons. * * *

(b) If the agency small business specialist does not agree to a withdrawal or modification, the case shall be promptly referred to the SBA representative (or, if a procurement center representative is not assigned, see 19.402(a)) for review.

* * * * *

■ 11. Revise section 19.705–3 to read as follows:

19.705–3 Preparing the solicitation.

The contracting officer shall provide the Small Business Administration's (SBA's) procurement center representative (or, if a procurement center representative is not assigned, see 19.402(a)) a reasonable period of time to review any solicitation requiring submission of a subcontracting plan and to submit advisory findings before the solicitation is issued.

■ 12. Amend section 19.705–4 by revising paragraph (d)(7) to read as follows:

19.705–4 Reviewing the subcontracting plan.

* * * * *

(d) * * *

(7) Obtain advice and recommendations from the SBA procurement center representative (or, if a procurement center representative is not assigned, see 19.402(a)) and the agency small business specialist.

■ 13. Amend section 19.705–5 by revising the first sentence in paragraph (a)(3) to read as follows:

19.705–5 Awards involving subcontracting plans.

(a) * * *

(3) Notify the SBA procurement center representative (or, if a procurement center representative is not assigned, see 19.402(a)) of the opportunity to review the proposed contract (including the plan and supporting documentation). * * *

* * * * *

■ 14. Amend section 19.705–6 by revising the introductory text of paragraph (c) and paragraph (d) to read as follows:

19.705–6 Postaward responsibilities of the contracting officer.

* * * * *

(c) Giving to the SBA procurement center representative (or, if a procurement center representative is not assigned, see 19.402(a)) a copy of—

* * * * *

(d) Notifying the SBA procurement center representative (or, if a procurement center representative is not assigned, see 19.402(a)) of the opportunity to review subcontracting plans in connection with contract modifications.

* * * * *

■ 15. Amend section 19.1305 by revising the second sentence of paragraph (e) to read as follows:

19.1305 HUBZone set-aside procedures.

* * * * *

(e) * * * When the SBA intends to appeal a contracting officer's decision to reject a recommendation of the SBA procurement center representative (or, if a procurement center representative is not assigned, see 19.402(a)) to set aside an acquisition for competition restricted to HUBZone small business concerns, the SBA procurement center representative shall notify the contracting officer, in writing, of its intent within 5 working days of receiving the contracting officer's notice of rejection. * * *

■ 16. Amend section 19.1405 by revising the second sentence of paragraph (d) to read as follows:

19.1405 Service-disabled veteran-owned small business set-aside procedures.

* * * * *

(d) * * * When the SBA intends to appeal a contracting officer's decision to reject a recommendation of the SBA procurement center representative (or, if a procurement center representative is not assigned, see 19.402(a)) to set aside an acquisition for competition restricted to service-disabled veteran-owned small business concerns, the SBA procurement center representative shall notify the contracting officer, in writing, of its intent within 5 working days of receiving the contracting officer's notice of rejection. * * *

[FR Doc. 06–5709 Filed 6–27–06; 8:45 am]

BILLING CODE 6820–EP–S

DEPARTMENT OF DEFENSE

GENERAL SERVICES ADMINISTRATION

NATIONAL AERONAUTICS AND SPACE ADMINISTRATION

48 CFR Part 15

[FAC 2005–10; FAR Case 2004–035; Item III; Docket 2006–0020, Sequence 8]

RIN 9000–AK04

Federal Acquisition Regulation; FAR Case 2004–035, Submission of Cost or Pricing Data on Noncommercial Modifications of Commercial Items

AGENCIES: Department of Defense (DoD), General Services Administration (GSA), and National Aeronautics and Space Administration (NASA).

ACTION: Final rule.

SUMMARY: The Civilian Agency Acquisition Council and the Defense Acquisition Regulations Council (Councils) have agreed on a final rule amending the Federal Acquisition Regulation (FAR) regarding prohibition on obtaining cost or pricing data to implement Section 818 of Public Law 108–375, the Ronald W. Reagan National Defense Authorization Act for Fiscal Year 2005.

DATES: *Effective Date:* July 28, 2006.

FOR FURTHER INFORMATION CONTACT: For clarification of content, contact Mr. Jeremy Olson, at (202) 501–3221. Please cite FAC 2005–10, FAR case 2004–035. For information pertaining to status or publication schedules, contact the FAR Secretariat at (202) 501–4755.

SUPPLEMENTARY INFORMATION:

A. Background

Section 818 of the Ronald W. Reagan National Defense Authorization Act for Fiscal Year 2005 amends 10 U.S.C. 2306a. 10 U.S.C. 2306a provides exceptions to the requirement for submission of cost or pricing data, including an exception for commercial items. Section 818 states that the exception for a commercial item does not apply to noncommercial modifications of a commercial item that are expected to cost, in the aggregate, more than $500,000 or 5 percent of the total price of the contract, whichever is greater. Section 818 applies to offers submitted, and to modifications of contracts or subcontracts made, on or after June 1, 2005.

An interim rule was published in the **Federal Register** on June 8, 2005 (70 FR 33659) to implement the statute.

In response to the interim rule, comments were received from seven respondents. One commenter opposes the rule in its entirety, while the other commenters recommend various revisions to the final rule regarding thresholds, definition of total cost, definition of noncommercial modifications, and waivers.

Public Comments

1. Rule fails to recognize the time-honored recognition prohibiting obtainment of cost or pricing data for commercial or modified commercial items.

Comment: One commenter asserts that this revision invalidates long standing procurement streamlining policies previously promoted by the acquisition community. This commenter states that ''The exemption allowance from submission of cost or pricing data afforded to providers of commercial items should not be abolished on the basis of an arbitrary dollar threshold.'' This commenter further states that the interim rule will pose an unnecessary burden to a large segment of the contracting community, and that concerns may also surface with respect to the safeguard from inadvertent disclosure of the required cost or pricing data. This commenter urges the abolishment of the rule.

Councils' Response: The interim rule implements a statutory requirement to obtain cost or pricing data for noncommercial modifications when the statutory thresholds are met. The Councils do not have the authority to decline implementation of the statute. As to the concern regarding safeguarding data, the Government has a long-standing set of procedures that has effectively protected contractor proprietary cost and pricing data from unauthorized disclosure. These same procedures will apply when cost or pricing data are obtained under the subject rule.

2. Dollar and percentage thresholds.

a. *Comment:* Two commenters assert that the interim rule should be revised to clearly state that the requirements for submitting certified cost or pricing data apply only if both the TINA threshold and the NDAA thresholds have been met. These commenters state that Section 818 created an exception to the commercial item exception, but did not change the threshold for TINA. Thus, noncommercial modifications are subject to TINA if over the NDAA thresholds, but only if the noncommercial modifications also exceed the TINA thresholds.

Councils' Response: The Councils agree with the commenters and have revised the interim rule accordingly.

Section 818 states that the exception for commercial items does not apply to cost or pricing data on noncommercial modifications that exceed the $500,000 or 5 percent threshold (whichever is greater). This means that, when the thresholds are exceeded, the commercial item exception does not apply. It does not mean that cost or pricing data must automatically be submitted. Rather, when the Section 818 thresholds are exceeded, the TINA requirements for submission of cost or pricing data need to be evaluated to determine if the noncommercial modifications are otherwise exempt from CAS (*e.g.,* is the cost less than $550,000 or are any of the other TINA exceptions present).

b. *Comment:* One commenter recommends raising the threshold in the interim rule from $500,000 to $550,000 to match the FAR requirement for obtaining cost or pricing data at FAR 15.403–4(a)(1). A second commenter also recommends changing the $500,000 to $550,000. This second commenter notes that, while Section 818 uses the $500,000 figure to amend 10 U.S.C. 2306a, subsection (a)(7) of 10 U.S.C. 2306a provides for adjustments every five years to the $500,000 threshold. This second commenter further states that the threshold is currently adjusted to $550,000, and to simplify matters and avoid confusion, other FAR sections also use the $550,000. The second commenter recommends a similar approach be taken for this rule.

Councils' Response: The interim rule required cost or pricing data if the total price exceeds the $550,000 threshold for the reasons stated in comment 2a. The Councils note that the adjustments required by subsection (a)(7) do not affect the $500,000 threshold in Section 818. The requirement to adjust the thresholds every five years is based on Section 807 of the Ronald W. Reagan National Defense Authorization Act for Fiscal Year 2005 (Pub. L. 108–375), which requires that the FAR Council periodically adjust statutory acquisition-related dollar thresholds in the FAR for inflation based on the change in the Consumer Price Index. However, acquisition-related thresholds in statutes that took effect after October 1, 2000, are escalated proportionately for the number of months between the effective date of the statute, and October 1, 2005. The statute also requires rounding to the nearest $50,000 for thresholds between $100,000 and $1,000,000. Application of the CPI as of June 1, 2005 (the effective date of Section 818) to October 1, 2005 yields a revised threshold of approximately $510,000, which when rounded results in no change to the Section 818 threshold of $500,000.

c. *Comment:* One commenter was concerned about application of the rule to a noncommercial modification that was between $500,000 and 5 percent of the contract. For example, if the proposal price is $100 million, and the noncommercial modification price is $4.5 million, no certified cost or pricing data would be obtained because the modification does not exceed 5 percent of the contract price. Conversely, if the proposal price was $9 million and the noncommercial modification was $600,000, certified cost or pricing data would be obtained because the modification exceeds 5 percent of the contract price and also exceeds $500,000. This commenter asserts that, from a taxpayer's point of view, this defies common sense. The $4,500,000 modification will most likely yield a bigger cost reduction as a result of obtaining cost or pricing data than would a $600,000 modification. This commenter therefore recommends substituting a specific dollar value of $550,000 in place of the dual thresholds (dollar value and percentage) contained in the interim rule.

Councils' Response: The interim rule required cost or pricing data if the total price exceeds $550,000 for the reasons stated in comment 2a. The interim rule implemented a statutory requirement to obtain cost or pricing data for noncommercial modifications when the statutory thresholds are met. The commenter is suggesting that the Councils revise or eliminate the five percent threshold contained in the legislation. The Councils do not have the authority to revise the statutorily mandated thresholds.

3. *''Minor'' modifications.*

Comment: One commenter recommends adding the word ''minor'' in front of the word modifications in the paragraphs under FAR 15.403–1(c)(3)(ii). This commenter states that, although the paragraph at FAR 15.403–1(c)(3)(ii) defines the applicability of the requirements for minor modifications, the addition of the word ''minor'' in each paragraph would make the applicability more explicit and minimize the possibilities for the paragraphs to be misread in isolation to encompass all modifications.

Councils' Response: The Councils agree that clarification would be helpful. However, since paragraph (3)(ii) is applied to ''minor modifications defined in paragraph (c)(3)(ii) of the definition of a commercial item at 2.101 that do not change the item from a commercial item to a noncommercial item,'' simply adding the word ''minor'' could cause more confusion than clarity. The Councils therefore have revised the language in paragraphs at FAR 15.403–1(c)(3)(ii)(A) thru (C) to add the word ''such,'' to minimize the possibility that the paragraphs could be misread in isolation.

4. Expected to ''cost'' more than $500,000.

Comment: One commenter notes that Section 818 establishes a limitation to the cost or pricing exception when the noncommercial modifications are expected to ''cost'' more than $500,000 or 5 percent of the total ''price'' of the contract. This commenter states that this ''cost'' should refer to the expected price of the modification, i.e., the cost to the Government. This commenter is concerned that the language in the interim rule could be construed as ''cost to the contractor'', thereby requiring that the expected cost be measured by FAR Part 31 to determine whether the noncommercial modification is within the dollar/percentage thresholds of the rule.

Councils' Response: The Councils agree that ''cost'', as used in the interim rule and the statute, does not require contractors to produce an estimated cost computed in accordance with the requirements of FAR part 31 for purposes of applying the thresholds. The term ''cost'' refers to the cost to the Government, *i.e.,* the price of the commercial modifications. The Councils do not believe that the interim rule could reasonably be construed to require computation in accordance with the requirements of FAR part 31. In addition, the Councils do not believe that ''cost to the Government'' would add clarity, since it could be misconstrued to the same extent as the term ''cost.'' However, the Councils recognize that the term ''cost'' should be clarified. The Councils have therefore revised the term ''cost'' to ''price'' in paragraphs at FAR 15.401–1(c)(3)(ii)(B) and (C) of the final rule to provide clarity while also accurately reflecting the intent of the statute.

5. *Definition of ''Noncommercial modification''.*

Comment: Two commenters recommended adding a definition of a ''noncommercial modification'' to distinguish such modifications from commercial modifications. These two commenters assert that a modification that merely alters appearance or is ''of a type'' requested for commercial use is not a ''noncommercial modification''. These two commenters further state that modifications such as additional wiring provisions, additional tubing or piping, thicker materials or doublers to strengthen structural components are

not noncommercial modifications even if they are made for the purpose of accommodating the later installation of military-specific equipment such as missile delivery systems, electronic warfare systems, or aerial refueling systems.

Councils' Response: Modification to the commercial item can be of three types. The first is a modification of such magnitude that the item no longer meets the definition of a commercial item at FAR 2.101. Such modifications are clearly not covered by Section 818. Since the item is no longer a commercial item, the established threshold of $550,000 for submittal of cost or pricing data would apply.

The second is a modification of a type customarily available in the commercial marketplace. These would be commercial modifications, and as such would also not be subject to the requirements of Section 818.

The third type is a modification defined in paragraph (c)(3)(ii) of the definition of a commercial item at FAR 2.101, which states:

Minor modifications of a type not customarily available in the commercial marketplace made to meet Federal Government requirements. Minor modifications are those modifications that do not significantly alter the nongovernmental function or essential physical characteristics of an item or component, or change the purpose of a process. Factors to be considered in determining whether a modification is minor include the value and size of the modification and the comparative value and size of the final product. Dollar values and percentages may be used as guideposts, but are not conclusive evidence that a modification is minor.

These minor modifications are the type of modifications the statute was intended to address. The Councils do not see any criteria in the statute or elsewhere that distinguishes minor modifications based on whether such modifications merely alter the appearance or are ''of a type'' requested for commercial use. The Councils see no basis for adding new criteria that would subdivide the FAR definition of minor modifications not available in the commercial marketplace into two new categories. The Councils are concerned that any such subdivision would result in inappropriate application of the statute by exempting certain modifications to which Congress intended the statute to apply.

6. Application of the rule to paragraph (c)(3)(i) of the definition of a commercial item at FAR 2.101.

Comment: Two commenters state that the statute is not intended to apply to the modifications of the type at paragraph (c)(3)(i) of the definition of a commercial item at FAR 2.101, and has recommended adding regulatory language to clarify that this exception remains.

Councils' Response: The interim rule specifically referenced paragraph (c)(3)(ii) of the definition of a commercial item at FAR 2.101. The Councils believe the interim rule clearly does not apply to paragraph (c)(3)(i) of that definition, since there is no reference to that paragraph.

7. ''Total Cost'' vs. ''In the Aggregate''.

Comment: Two commenters note that the statute applies the $500,000 or 5 percent (whichever is greater) threshold ''in the aggregate'', whereas the interim rule refers to ''total cost.'' One commentor states that any final rule should clarify that the ''total cost'' applies on a per-transaction basis, not on a cumulative basis. These two commenters state that, if treated cumulatively, the threshold would have to apply retroactively, which is impracticable and unfair. Also, if treated cumulatively, subsequent modifications of a non-commercial nature might be refused by an entity with an accounting system unable to comply with the requirements for certified cost or pricing data.

Councils' Response: The Councils agree that the thresholds should not require retroactive determinations of the total cost of all noncommercial modifications. The Councils therefore have revised the final rule to specify that the thresholds apply to modifications of a commercial item for a particular contract action. This is consistent with the application of TINA, which is done on an individual contract action basis.

8. Waivers of requirement to submit cost or pricing data.

Comment: Two commenters state that, where the offeror does not have, nor is required to have, an approved Cost Accounting Standards compliant system, the requirement for cost or pricing data should be waived, as provided for at FAR 15.403–1(c)(4).

Councils' Response: FAR 15.403–1(c)(4) permits the head of the contracting activity to waive the requirement for submission of cost or pricing data in exceptional cases.

This is a case-by-case determination, based on the particular facts and circumstances. The Councils do not believe that it is advisable to revise this by providing for a blanket exception. The Councils are concerned that such an exception would fail to take into account the specific facts and circumstances of each case, and could also be perceived as circumventing the Congressional intent of the statute. Furthermore, such an exception cannot be provided for DoD contracts. Exceptional circumstances for DoD contracts are limited by the provisions of Section 817 of the National Defense Authorization Act of 2003. These provisions limit the exceptional circumstances to instances in which the property or services cannot reasonably be obtained without the waiver, the price can be determined fair and reasonable without obtaining the cost or pricing data, and there are demonstrated benefits of granting the waiver.

9. *Does the 5 percent threshold apply to the prime contract or to the subcontract value when a subcontract is at issue?*

Comment. One commenter asked for clarification about how to apply this rule to subcontracts.

Councils' Response: FAR 15.403–4(a)(1) states that *''Unless an exception applies, cost or pricing data are required before accomplishing actions expected to exceed the current threshold . . .''*. The actions include *''. . . (ii) The award of a subcontract at any tier, if the contractor and each higher-tier subcontractor were required to submit cost or pricing data . . .''*. This means that a prime contractor, or a higher tier subcontractor, must apply TINA to their lower-tiered subcontractors. If one of those lower-tiered subcontractors qualifies for an exception to TINA (as outlined in FAR 15.403–1(b) & (c)) then TINA does not apply to that subcontract.

Based on this, if the higher tier contractor is required to submit cost or pricing data, the application of the $500,000 or 5 percent of total contract price threshold applies to the lower tier contractor whenever a commercial item being procured is to be modified, regardless of the tier, and is calculated using the amounts related to that subcontract. For subcontracting purposes, the threshold is based on the subcontract amount and not the prime, or higher tier contract amount.

This is not a significant regulatory action and, therefore, was not subject to review under Section 6(b) of Executive Order 12866, Regulatory Planning and Review, dated September 30, 1993. This rule is not a major rule under 5 U.S.C. 804.

B. Regulatory Flexibility Act.

The Department of Defense (DoD), General Services Administration (GSA), and National Aeronautics and Space Administration (NASA) certify that this final rule will not have a significant economic impact on a substantial number of small entities within the meaning of the Regulatory Flexibility

Act, 5 U.S.C. 601 *et seq.*, because the number of small entities providing commercial items with noncommercial modifications costing more than $500,000 is expected to be very low. Although comments submitted on the interim rule prompted several technical amendments necessary to correct the rule, this expectation remains unchanged.

C. Paperwork Reduction Act

The Paperwork Reduction Act does not apply because the rule does not impose any information collection requirements that require the approval of the Office of Management and Budget under 44 U.S.C. 3501, *et seq.*

List of Subjects in 48 CFR Part 15

Government procurement.

Dated: June 20, 2006.

Ralph De Stefano,

Director, Contract Policy Division.

■ Therefore, DoD, GSA, and NASA amend 48 CFR part 15 as set forth below:

PART 15—CONTRACTING BY NEGOTIATION

■ 1. The authority citation for 48 CFR part 15 continues to read as follows:

Authority: 40 U.S.C. 121(c); 10 U.S.C. chapter 137; and 42 U.S.C. 2473(c).

■ 2. Section 15.403–1 is amended by revising paragraphs (c)(3)(ii)(A), (B), and (C) to read as follows:

15.403–1 Prohibition on obtaining cost or pricing data (10 U.S.C. 2306a and 41 U.S.C. 254b).

* * * * *

(c) * * *

(3) Commercial items. (i) * * *

(ii) * * *

(A) For acquisitions funded by any agency other than DoD, NASA, or Coast Guard, such modifications of a commercial item are exempt from the requirement for submission of cost or pricing data.

(B) For acquisitions funded by DoD, NASA, or Coast Guard, such modifications of a commercial item are exempt from the requirement for submission of cost or pricing data provided the total price of all such modifications under a particular contract action does not exceed the greater of $500,000 or 5 percent of the total price of the contract.

(C) For acquisitions funded by DoD, NASA, or Coast Guard such modifications of a commercial item are not exempt from the requirement for submission of cost or pricing data on the basis of the exemption provided for at FAR 15.403–1(c)(3) if the total price of all such modifications under a particular contract action exceeds the greater of $500,000 or 5 percent of the total price of the contract.

* * * * *

[FR Doc. 06–5710 Filed 6–27–06; 8:45 am]

BILLING CODE 6820–EP–S

DEPARTMENT OF DEFENSE

GENERAL SERVICES ADMINISTRATION

NATIONAL AERONAUTICS AND SPACE ADMINISTRATION

48 CFR Parts 4, 22, 47, 52, and 53

[FAC 2005–10; FAR Case 2005–033; Item IV; Docket 2006–0020, Sequence 11]

RIN 9000–AK47

Federal Acquisition Regulation; FAR Case 2005–033, Implementation of Wage Determinations OnLine (WDOL)

AGENCIES: Department of Defense (DoD), General Services Administration (GSA), and National Aeronautics and Space Administration (NASA).

ACTION: Interim rule.

SUMMARY: The Civilian Agency Acquisition Council and the Defense Acquisition Regulations Council (Councils) have agreed on an interim rule amending the Federal Acquisition Regulation (FAR) to implement the Wage Determinations OnLine (WDOL) internet website as the source for Federal contracting agencies to obtain wage determinations issued by the Department of Labor (DOL) for service contracts subject to the McNamara-O'Hara Service Contract Act (SCA) and for construction contracts subject to the Davis-Bacon Act (DBA).

DATES: *Effective Date*: June 28, 2006.

Comment Date: Interested parties should submit written comments to the FAR Secretariat on or before August 28, 2006 to be considered in the formulation of a final rule.

ADDRESSES: Submit comments identified by FAC 2005–10, FAR case 2005–033, by any of the following methods:

- Federal eRulemaking Portal: *http://www.regulations.gov*. Follow the instructions for submitting comments.
- Agency Web site: *http://www.acquisition.gov/far/ProposedRules/ proposed.htm*. Click on the FAR case number to submit comments.
- E-mail: *farcase.2005–033@gsa.gov*. Include FAC 2005–10, FAR case 2005–033 in the subject line of the message.
- Fax: 202–501–4067.
- Mail: General Services Administration, Regulatory Secretariat (VIR), 1800 F Street, NW, Room 4035, ATTN: Laurieann Duarte, Washington, DC 20405.

Instructions: Please submit comments only and cite FAC 2005–10, FAR case 2005–033, in all correspondence related to this case. All comments received will be posted without change to *http://www.acquisition.gov/far/ProposedRules/comments.htm* including any personal and/or business confidential information provided.

FOR FURTHER INFORMATION CONTACT: For clarification of content, contact Ms. Gloria Sochon, Procurement Analyst, at (202) 219–0311. Please cite FAC 2005–10, FAR case 2005–033. For information pertaining to status or publication schedules, contact the FAR Secretariat at (202) 501–4755.

SUPPLEMENTARY INFORMATION:

A. Background

In the August 26, 2005 **Federal Register** (70 FR 50888), the DOL issued a final rule to amend Title 29 CFR parts 1 and 4 to allow for full implementation of the Wage Determinations OnLine (WDOL) Internet Website (*http://www.wdol.gov*) as the source for Federal contracting agencies to use when obtaining wage determinations issued by the DOL for service contracts subject to the SCA and for construction contracts subject to the DBA. The Councils are not seeking comments on the DOL rule, which has already been issued in final, but are requesting comments as to whether the FAR policy in this rule implementing the DOL rule is clear. This interim rule amends FAR Part 22 to direct Federal contracting agencies to obtain wage determinations issued by the DOL for contracts subject to the SCA and DBA from the WDOL website.

This interim rule incorporates new geographical jurisdictions for DOL's Wage and Hour Regional Offices and eliminates FAR references to the Government Printing Office (GPO) publication of general wage determinations. The Contracting Officer (CO) will be able to access the WDOL website (*http://www.wdol.gov*) to find the applicable wage determination for a contract action subject to the SCA or DBA. If the WDOL database does not contain the applicable wage determination for a SCA contract action, the CO must use the e98 process to request a wage determination from DOL.

The e98 means a DOL approved electronic application, (also available at *http://www.wdol.gov*), whereby a CO submits pertinent information to the DOL and requests a wage determination directly from the Wage and Hour Division. If the WDOL database does not contain the applicable wage determination for a DBA contract action, the CO must request a wage determination by submitting a SF–308 to the Wage and Hour Division. The DOL made an administrative determination that providing Federal contracting agencies with an electronic submission option for the infrequent instances in which an agency files a SF–308 does not justify the considerable expense that developing such a system would entail. To substantiate its decision, the DOL noted that in FY 2004, it processed less than 100 SF–308's.

This FAR rule eliminates the requirement for the CO to submit a copy of collective bargaining agreements (CBAs) to the DOL for the purpose of obtaining a wage determination under Section 4(c) of the SCA, unless directed by the DOL to do so. The CO instead, is required to prepare a wage determination using the WDOL process, and to incorporate the complete CBA and all its attachments into the solicitation or contract action. The wage determination prepared by the CO is a one page document that references the CBA by the name of the incumbent contractor and the name of the union, and stipulates that the economic terms of the CBA will apply as the SCA minimum wages and monetary benefits for the contract resulting from the solicitation pursuant to DOL Regulation 29 CFR subpart 4.1b.

This interim rule also deletes the clause at 52.222–47, SCA Minimum Wages and Fringe Benefits Applicable to Successor Contract Pursuant to Predecessor Contractor Collective Bargaining Agreement (CBA), because with the WDOL process it is no longer necessary. In addition, FAR clause 52.222–49, Service Contract Act-Place of Performance Unknown, is revised to make conforming changes to FAR references; and Standard Forms 98, 98a and 99 are deleted from FAR Part 53 in their entirety.

This is not a significant regulatory action and, therefore, is not subject to review under Section 6(b) of Executive Order 12866, Regulatory Planning and Review, dated September 30, 1993. The rule is not a major rule under 5 U.S.C. 804.

B. Regulatory Flexibility Act

This interim rule is not expected to have a significant economic impact on a substantial number of small entities within the meaning of the Regulatory Flexibility Act, 5 U.S.C. 601, *et seq.*, because the rule involves internal Government processes between the DOL and Federal contracting.

During the design phase of WDOL.gov, the WDOL Task Force coordinated with a number of labor organizations, contractors, the Contract Services Association and various Federal contracting agencies to address and satisfy any concerns about the effect of the rule on all interested parties including small entities.

Therefore, an Initial Regulatory Flexibility Analysis has not been performed. The Councils will consider comments from small entities concerning the affected FAR parts 22, 47, 52, and 53 in accordance with 5 U.S.C. 610. Interested parties must submit such comments separately and should cite 5 U.S.C 601, *et seq.* (FAC 2005–10, FAR case 2005–033), in correspondence.

C. Paperwork Reduction Act

The Paperwork Reduction Act does not apply because the changes to the FAR do not impose information collection requirements that require the approval of the Office of Management and Budget under 44 U.S.C. 3501, *et seq.*

D. Determination to Issue an Interim Rule

A determination has been made under the authority of the Secretary of Defense (DoD), The Administrator of General Services (GSA), and the Administrator of the National Aeronautics and Space Administration (NASA) that urgent and compelling reasons exist to promulgate this interim rule without prior opportunity for public comment. This action is necessary because the rule allows agencies to use the WDOL website as the source for obtaining wage determinations issued by DOL for service contracts subject to the SCA and DBA. Thus, the rule will streamline and improve the internal operating procedures of the Government. The rule will not have a significant cost or administrative impact on contractors or offerors. However, pursuant to Public Law 98–577 and FAR 1.501, the Councils will consider public comments received in response to this interim rule in the formation of the final rule.

List of Subjects in 48 CFR Parts 22, 47, 52, and 53

Government procurement.

Dated: June 20, 2006.

Ralph De Stefano,

Director, Contract Policy Division.

■ Therefore, DoD, GSA, and NASA amend 48 CFR parts 4, 22, 47, 52, and 53 as set forth below:

■ 1. The authority citation for 48 CFR parts 4, 22, 47, 52, and 53 continues to read as follows:

Authority: 40 U.S.C. 121(c); 10 U.S.C. chapter 137; and 42 U.S.C. 2473(c).

PART 4—ADMINISTRATIVE MATTERS

■ 2. Amend section 4.1202 by revising paragraph (q) to read as follows:

4.1202 Solicitation provision and contract clause.

* * * * *

(q) 52.222–48, Exemption from Application of Service Contract Act Provisions—Contractor Certification.

* * * * *

PART 22—APPLICATION OF LABOR LAWS TO GOVERNMENT ACQUISITIONS

■ 3. Amend section 22.001 by revising the section heading, and by adding, in alphabetical order, the definitions ''e98'' and ''Wage Determinations OnLine (WDOL)'' to read as follows:

22.001 Definitions.

* * * * *

e98 means the Department of Labor's approved electronic application (*http://www.wdol.gov*), whereby a contracting officer submits pertinent information to the Department of Labor and requests a Service Contract Act wage determination directly from the Wage and Hour Division.

Wage Determinations OnLine (WDOL) means the Government Internet website for both Davis-Bacon Act and Service Contract Act wage determinations available at *http://www.wdol.gov*.

■ 4. Amend section 22.102–2 by revising paragraph (c) to read as follows:

22.102–2 Administration.

* * * * *

(c) The U.S. Department of Labor is responsible for the administration and enforcement of the Occupational Safety and Health Act. The Department of Labor's Wage and Hour Division is responsible for administration and enforcement of numerous wage and hour statutes including Davis-Bacon and Related Acts, McNamara-O'Hara Service Contract Act, Walsh-Healey Public Contracts Act, Copeland Act, and Contract Work Hours and Safety Standards Act. Contracting officers should contact the Wage and Hour Division's regional offices when

required by the subparts relating to these statutes unless otherwise specified. Addresses for these offices may be found at 29 CFR 1, Appendix B.

■ 5. Amend section 22.404–1 by revising paragraph (a) to read as follows:

22.404–1 Types of wage determinations.

(a) *General wage determinations.* (1) A general wage determination contains prevailing wage rates for the types of construction designated in the determination, and is used in contracts performed within a specified geographical area. General wage determinations contain no expiration date and remain valid until modified, superseded, or canceled by the Department of Labor. Once incorporated in a contract, a general wage determination normally remains effective for the life of the contract, unless the contracting officer exercises an option to extend the term of the contract (see 22.404–12). These determinations shall be used whenever possible. They are issued at the discretion of the Department of Labor either upon receipt of an agency request or on the Department of Labor's own initiative.

(2) General wage determinations are published on the WDOL website. General wage determinations are effective on the publication date of the wage determination or upon receipt of the wage determination by the contracting agency, whichever occurs first. ''Publication'' within the meaning of this section shall occur on the first date the wage determination is published on the WDOL. Archived Davis-Bacon Act general wage determinations that are no longer current may be accessed in the ''Archived DB WD'' database on WDOL for information purposes only. Contracting officers may not use an archived wage determination in a contract action without obtaining prior approval of the Department of Labor. To obtain prior approval, contact the Department of Labor, Wage and Hour Division, using *http://www.dol.gov/esa*, or contact the procurement agency labor advisor listed on *http://www.wdol.gov*.

* * * * *

■ 6. Amend section 22.404–3 by revising paragraph (a); and the paragraph heading and the first sentence of the introductory text of paragraph (b) to read as follows:

22.404–3 Procedures for requesting wage determinations.

(a) *General wage determinations.* If there is a general wage determination on the WDOL website applicable to the project, the agency may use it without notifying the Department of Labor. When necessary, a request for a general wage determination may be made by submitting Standard Form (SF) 308, Request for Determination and Response to Request (see 53.301–308), to the Administrator, Wage and Hour Division, Attention: Branch of Construction Contract Wage Determinations, 200 Constitution Avenue, NW, Washington, DC 20210.

(b) *Project wage determinations.* If a general wage determination is not available on WDOL, a contracting agency shall submit requests for project wage determinations on SF 308 to the Department of Labor. * * *

* * * * *

■ 7. Amend section 22.404–6 by—

■ a. Revising paragraph (a)(3);

■ b. Revising paragraph (b)(1)(i), the first sentence of (b)(1)(ii), (b)(2), and the first and second sentences of (b)(6);

■ c. Revising paragraph (c)(1); and

■ d. Revising paragraph (d)(1)(ii).

■ The revised text reads as follows:

22.404–6 Modifications of wage determinations.

(a) *General.* * * *

(3) The need for inclusion of the modification of a general wage determination for the primary site of the work in a solicitation is determined by the date the modified wage determination is published on the WDOL, or by the date the agency receives actual written notice of the modification from the Department of Labor, whichever occurs first. (Note the distinction between receipt by the agency (modification is effective) and receipt by the contracting officer, which may occur later.) During the course of the solicitation, the contracting officer shall monitor the WDOL website to determine whether the applicable wage determination has been revised. Revisions published on the WDOL website or otherwise communicated to the contracting officer within the timeframes prescribed at 22.404–6(b) and (c) are applicable and must be included in the resulting contract. Monitoring can be accomplished by use of the WDOL website's ''Alert Service''.

(b) * * *

(1) * * *

(i) It is received by the contracting agency, or is published on the WDOL, 10 or more calendar days before the date of bid opening; or

(ii) It is received by the contracting agency, or is published on the WDOL, less than 10 calendar days before the date of bid opening, unless the contracting officer finds that there is not reasonable time available before bid opening to notify the prospective bidders. * * *

(2) All written actions modifying wage determinations received by the contracting agency after bid opening, or modifications to general wage determinations published on the WDOL after bid opening, shall not be effective and shall not be included in the solicitation (but see paragraph (b)(6) of this subsection).

* * * * *

(6) If an award is not made within 90 days after bid opening, any modification to a general wage determination which is published on the WDOL before award, shall be effective for any resultant contract unless an extension of the 90–day period is obtained from the Administrator, Wage and Hour Division. An agency head may request such an extension from the Administrator. * * *

(c) * * *

(1) All written actions modifying wage determinations received by the contracting agency before contract award, or modifications to general wage determinations published on the WDOL before award, shall be effective.

* * * * *

(d) * * *

(1) * * *

(ii) The Department of Labor publishes the modification to a general wage determination on the WDOL before exercise of the option.

* * * * *

22.608 [Amended]

■ 8. Amend section 22.608 by removing from the parenthetical in paragraph (b) ''22.609'' and adding ''29 CFR part 1, Appendix B'' in its place.

22.609 [Removed and Reserved]

■ 9. Remove and reserve section 22.609.

22.1001 [Amended]

■ 10. Amend section 22.1001 by removing the definition ''Notice''.

■ 11. Amend 22.1002–3 by revising paragraph (b) to read as follows:

22.1002–3 Wage determinations based on collective bargaining agreements.

* * * * *

(b) Paragraphs in this Subpart 22.10 which deal with this statutory requirement and the Department of Labor's implementing regulations are 22.1010, concerning notification to contractors and bargaining representatives of procurement dates; 22.1012–2, explaining when a collective bargaining agreement will not apply due to late receipt by the contracting officer; and 22.1013 and 22.1021, explaining when the application of a collective bargaining agreement can be challenged

due to a variance with prevailing rates or lack of arm's length bargaining.

22.1003–4 [Amended]

■ 12. Amend section 22.1003–4 at paragraph (b)(4)(ii)(D) by removing ''22.1006(e)'' and adding ''22.1006(d)'' in its place.

22.1004 [Amended]

■ 13. Amend section 22.1004 at paragraph (b) by removing ''29 CFR part 4, subpart B'' and inserting ''29 CFR part 4, subparts A and B'' in its place.

22.1006 [Amended]

■ 14. Amend section 22.1006 by removing and reserving paragraph (d); and in paragraph (e)(1) by adding ''—Contractor Certification'' following ''Provisions''.

■ 15. Amend section 22.1007 by revising the section heading and the introductory paragraph; and by removing the parenthetical from the end of paragraph (c)(2). The revised text reads as follows:

22.1007 Requirement to obtain wage determinations.

The contracting officer shall obtain wage determinations for the following service contracts:

* * * * *

■ 16. Revise sections 22.1008 and 22.1008–1 to read as follows:

22.1008 Procedures for obtaining wage determinations.

22.1008–1 Obtaining wage determinations.

(a) Contracting officers may obtain most prevailing wage determinations using the WDOL website. Contracting officers may also use the Department of Labor's e98 electronic process, located on the WDOL website, to request a wage determination directly from the Department of Labor. If the WDOL database does not contain the applicable prevailing wage determination for a contract action, the contracting officer must use the e98 process to request a wage determination from the Department of Labor.

(b) In using the e98 process to obtain prevailing wage determinations, contracting officers shall provide as complete and accurate information on the e98 as possible. Contracting officers shall ensure that the email address submitted on an e98 request is accurate.

(c) The contracting officer must anticipate the amount of time required to gather the information necessary to obtain a wage determination, including sufficient time, if necessary, to contact the Department of Labor to request wage determinations that are not available through use of the WDOL.

(d) Although the WDOL website provides assistance to the contracting agency to select the correct wage determination, the contracting agency remains responsible for the wage determination selected. If the contracting agency has used the e98 process, the Department of Labor will respond to the contracting agency based on the information provided on the e98. The contracting agency may rely upon the Department of Labor response as the correct wage determination for the contract.

(e) To obtain the applicable wage determination for each contract action, the contracting officer shall determine the following information concerning the service employees expected to be employed by the contractor and any subcontractors in performing the contract:

(1) Determine the classes of service employees to be utilized in performance of the contract using the Wage and Hour Division's *Service Contract Act Directory of Occupations* (Directory). The Directory can be found on WDOL's Library Page, and is for sale by the Superintendent of Documents, U.S. Government Printing Office.

(2) Determine the locality where the services will be performed (see 22.1009).

(3) Determine whether Section 4(c) of the Act applies (see 22.1008–2, 22.1010 and 22.1012–2).

(4) Determine the wage rate that would be paid each class if employed by the agency and subject to the wage provisions of 5 U.S.C. 5341 and/or 5332 (see 22.1016).

(f) If the contracting officer has questions regarding the procedures for obtaining a wage determination, or questions regarding the selection of a wage determination, the contracting officer should request assistance from the agency labor advisor.

22.1008–2 [Removed]

22.1008–3 [Redesignated as 22.1008–2]

■ 17a. Remove section 22.1008–2 and redesignate 22.1008–3 as 22.1008–2.

■ 17b. In addition to the amendment above, amend the newly designated section 22.1008–2 by—

■ a. Revising the second sentence of paragraph (a);

■ b. Amending paragraphs (c)(2)(i)(A) and (B) by removing ''22.1012–3'' and adding ''22.1012–2'' in its place;

■ c. Redesignating paragraph (d) as (d)(1) and removing the last sentence of the paragraph; and adding paragraphs (d)(2) and (d)(3);

■ d. Redesignating paragraphs (e)(1) and (2) as (e)(i) and (e)(ii), respectively, and paragraph (e) as (e)(1); and adding paragraph (e)(2); and

■ e. Revising the introductory text of paragraph (g).

■ The revised text reads as follows:

22.1008–2 Section 4(c) successorship with incumbent contractor collective bargaining agreement.

(a) * * * The contracting officer shall determine whether there is a predecessor contract covered by the Act and, if so, whether the incumbent prime contractor or its subcontractors and any of their employees have a collective bargaining agreement.

* * * * *

(d)(1) * * *

(2) If the contracting officer has timely received the collective bargaining agreement, the contracting officer may use the WDOL website to prepare a wage determination referencing the agreement and incorporate that wage determination, attached to a complete copy of the collective bargaining agreement, into the successor contract action. In using the WDOL process, it is not necessary to submit a copy of the collective bargaining agreement to the Department of Labor unless requested to do so.

(3) The contracting officer may also use the e98 process on WDOL to request that the Department of Labor prepare the cover wage determination. The Department of Labor's response to the e98 may include a request for the contracting officer to submit a complete copy of the collective bargaining agreement. Any questions regarding the applicability of the Act to a collective bargaining agreement should be directed to the agency labor advisor.

(e)(1) * * *

(2) If the contracting officer's review (see 22.1013) indicates that monetary provisions of the collective bargaining agreement may be substantially at variance or may not have been reached as a result of arm's length bargaining, the contracting officer shall immediately contact the agency labor advisor to consider if further action is warranted.

* * * * *

(g) If the collective bargaining agreement does not apply to all service employees under the contract, the contracting officer shall access WDOL to obtain the prevailing wage determination for those service employee classifications that are not covered by the collective bargaining agreement. The contracting officer shall separately list in the solicitation and contract the service employee classifications—

* * * * *

22.1008–4 through 22.1008–7 [Removed]

■ 18. Remove sections 22.1008–4 through 22.1008–7.

■ 19. Revise sections 22.1009–3 and 22.1009–4 to read as follows:

22.1009–3 All possible places of performance identified.

(a) If the contracting officer can identify all the possible places or areas of performance (even though the actual place of performance will not be known until the successful offeror is chosen), the contracting officer shall obtain a wage determination for each locality where services may be performed (see 22.1008).

(b) If the contracting officer subsequently learns of any potential offerors in previously unidentified places before the closing date for submission of offers, the contracting officer shall—

(1) Obtain wage determinations for the additional places of performance and amend the solicitation to include all wage determinations. If necessary, the contracting officer shall extend the time for submission of final offers; and

(2) Follow the procedures in 22.1009–4.

22.1009–4 All possible places of performance not identified.

If the contracting officer believes that there may be offerors interested in performing in unidentified places or areas, the contracting officer may use the following procedures:

(a) Include the following information in the synopsis and solicitation:

(1) That the place of performance is unknown.

(2) The possible places or areas of performance that the contracting officer has already identified.

(3) That the contracting officer will obtain wage determinations for additional possible places of performance if asked to do so in writing.

(4) The time and date by which offerors must notify the contracting officer of additional places of performance.

(b) Include the information required by paragraphs (a)(2) and (a)(4) of this section in the clause at 52.222–49, Service Contract Act-Place of Performance Unknown (see 22.1006(f)). The closing date for receipt of offerors' requests for wage determinations for additional possible places of performance should allow reasonable time for potential offerors to review the solicitation and determine their interest in competing. Generally, 10 to 15 days from the date of issuance of the solicitation may be considered a reasonable period of time.

(c) The procedures in 14.304 shall apply to late receipt of offerors' requests for wage determinations for additional places of performance. However, late receipt of an offeror's request for a wage determination for additional places of performance does not preclude the offeror's competing for the proposed acquisition.

(d) If the contracting officer receives any timely requests for wage determinations for additional places of performance the contracting officer shall—

(1) Obtain wage determinations for the additional places of performance; and

(2) Amend the solicitation to include all wage determinations and, if necessary, extend the time for submission of final offers.

(e) If the successful offeror did not make a timely request for a wage determination and will perform in a place of performance for which the contracting officer therefore did not request a wage determination, the contracting officer shall—

(1) Award the contract;

(2) Obtain a wage determination; and

(3) Incorporate the wage determination in the contract, retroactive to the date of contract award and with no adjustment in contract price, pursuant to the clause at 52.222–49, Service Contract—Place of Performance Unknown.

22.1010 [Amended]

■ 20. Amend section 22.1010 by removing from paragraph (b) ''22.1012–3(a)'' and adding ''22.1012–2(a)'' in its place.

22.1011 through 22.1011–2 [Removed and Reserved]

■ 21. Remove and reserve section 22.1011, which consists of 22.1011–1 and 22.1011–2.

■ 22. Revise sections 22.1012 and 22.1012–1 to read as follows:

22.1012 Applicability of revisions to wage determinations.

22.1012–1 Prevailing wage determinations.

(a)(1) The Wage and Hour Administrator may issue revisions to prevailing wage determinations periodically. The need for inclusion of a revised prevailing wage determination in a solicitation, contract or contract modification (see 22.1007) is determined by the date of receipt of the revised prevailing wage determination by the contracting agency. (Note the distinction between receipt by the agency and receipt by the contracting officer which may occur later.)

(i) For purposes of using WDOL, the time of receipt by the contracting agency shall be the first day of publication of the revised prevailing wage determination on the website.

(ii) For purposes of using the e98 process, the time of receipt by the contracting agency shall be the date the agency receives actual notice of a new or revised prevailing wage determination from the Department of Labor as an e98 response.

(2) In selecting a prevailing wage determination from the WDOL website for use in a solicitation or other contract action, the contracting officer shall monitor the WDOL website to determine whether the applicable wage determination has been revised. Revisions published on the WDOL website or otherwise communicated to the contracting officer within the timeframes prescribed at 22.1012–1(b) and (c) are effective and must be included in the resulting contract. Monitoring can be accomplished by use of the WDOL website's ''Alert Service''.

(b) The following shall apply when contracting by sealed bidding: a revised prevailing wage determination shall not be effective if it is received by the contracting agency less than 10 days before the opening of bids, and the contracting officer finds that there is not reasonable time to incorporate the revision in the solicitation.

(c) For contractual actions other than sealed bidding, a revised prevailing wage determination received by the contracting agency after award of a new contract or a modification as specified in 22.1007(b) shall not be effective provided that the start of performance is within 30 days of the award or the specified modification. If the contract does not specify a start of performance date which is within 30 days of the award or the specified modification, and if contract performance does not commence within 30 days of the award or the specified modification, any revision received by the contracting agency not less than 10 days before commencement of the work shall be effective.

(d) If the contracting officer has submitted an e98 to the Department of Labor requesting a prevailing wage determination and has not received a response within 10 days, the contracting officer shall contact the Wage and Hour Division by telephone to determine when the wage determination can be expected. (The telephone number is provided on the e98 website.)

22.1012–2 [Removed]

22.1012–3 [Redesignated as 22.1012–2]

22.1012–4 and 22.1012–5 [Removed]

■ 23a. Remove sections 22.1012–2, 22.1012–4 and 22.1012–5; and redesignate 22.1012–3 as 22.1012–2.

■ 23b. In addition to the amendment above, revise the redesignated section 22.1012–2 to read as follows:

22.1012–2 Wage determinations based on collective bargaining agreements.

(a) In sealed bidding, a new or changed collective bargaining agreement shall not be effective under section 4(c) of the Act if the contracting agency has received notice of the terms of the new or changed collective bargaining agreement less than 10 days before bid opening and the contracting officer determines that there is not reasonable time to incorporate the new or changed terms of the collective bargaining agreement in the solicitation.

(b) For contractual actions other than sealed bidding, a new or changed collective bargaining agreement shall not be effective under section 4(c) of the Act if notice of the terms of the new or changed collective bargaining agreement is received by the contracting agency after award of a successor contract or a modification as specified in 22.1007(b), provided that the contract start of performance is within 30 days of the award of the contract or of the specified modification. If the contract does not specify a start of performance date which is within 30 days of the award of the contract or of the specified modification, or if contract performance does not commence within 30 days of the award of the contract or of the specified modification, any notice of the terms of a new or changed collective bargaining agreement received by the agency not less than 10 days before commencement of the work shall be effective for purposes of the successor contract under section 4(c) of the Act.

(c) The limitations in paragraphs (a) and (b) of this subsection shall apply only if timely notification required in 22.1010 has been given.

(d) If the contracting officer has submitted an e98 to Department of Labor requesting a wage determination based on a collective bargaining agreement and has not received a response from the Department of Labor within 10 days, the contracting officer shall contact the Wage and Hour Division by telephone to determine when the wage determination can be expected. (The telephone number is provided on the e98 website.) If the Department of Labor is unable to provide the wage determination by the latest date needed to maintain the acquisition schedule, the contracting officer shall incorporate the collective bargaining agreement itself in a solicitation or other contract action (*e.g.*, exercise of option) and include a wage determination referencing that collective bargaining agreement created by use of the WDOL website (see 22.1008–2(d)(2)).

■ 24. Revise section 22.1014 to read as follows:

22.1014 Delay over 60 days in bid opening or commencement of work.

If a wage determination was obtained through the e98 process, and bid opening, or commencement of work under a negotiated contract has been delayed, for whatever reason, more than 60 days from the date indicated on the previously submitted e98, the contracting officer shall submit a new e98. Any revision of a wage determination received by the contracting agency as a result of that communication shall supersede the earlier response as the wage determination applicable to the particular acquisition subject to the time frames in 22.1012–1(b) and (c).

22.1017 [Removed and Reserved]

■ 25. Remove and reserve section 22.1017.

PART 47—TRANSPORTATION

■ 26. Amend section 47.202 by revising paragraph (a) to read as follows:

47.202 Presolicitation planning.

* * * * *

(a) The Service Contract Act of 1965 (SCA) requirement to obtain a wage determination by accessing the Wage Determination OnLine website (*http://www.wdol.gov*) using the WDOL process or by submitting a request directly to the Department of Labor on this website using the e98 process before the issuance of an invitation for bid, request for proposal, or commencement of negotiations for any contract exceeding $2,500 that may be subject to the SCA (see Subpart 22.10);

* * * * *

PART 52—SOLICITATION PROVISIONS AND CONTRACT CLAUSES

52.212–5 [Amended]

■ 27. Amend section 52.212–5 by revising the date of the clause to read ''(JUN 2006)''; and by removing paragraph (c)(5).

52.222–47 [Removed and Reserved]

■ 28. Remove and reserve section 52.222–47.

■ 29. Amend section 52.222–48 by revising the section and clause headings as set forth below.

52.222–48 Exemption from Application of Service Contract Act Provisions—Contractor Certification.

* * * * *

EXEMPTION FROM APPLICATION OF SERVICE CONTRACT ACT PROVISIONS—CONTRACTOR CERTIFICATION (JUN 2006)

* * * * *

52.222–49 [Amended]

■ 30. Amend section 52.222–49 by removing from the introductory text ''and 22.1009–4(c)''.

PART 53—FORMS

53.222 [Amended]

■ 31. Amend section 53.222 by removing ''99,'' from the section heading; and removing and reserving paragraph (b).

53.301 [Amended]

■ 32. Remove sections 53.301–98, 53.301–98a, and 53.301–99.

[REMOVE SF'S 98, 98A AND 99]

[FR Doc. 06–5708 Filed 6–27–06; 8:45 am]

BILLING CODE 6820–EP–S

DEPARTMENT OF DEFENSE

GENERAL SERVICES ADMINISTRATION

NATIONAL AERONAUTICS AND SPACE ADMINISTRATION

48 CFR Parts 25 and 52

[FAC 2005–10; FAR Case 2006–006; Item V; Docket 2006–0020, Sequence 10]

RIN 9000–AK49

Federal Acquisition Regulation; FAR Case 2006–006, Free Trade Agreements—El Salvador, Honduras, and Nicaragua

AGENCIES: Department of Defense (DoD), General Services Administration (GSA), and National Aeronautics and Space Administration (NASA).

ACTION: Interim rule with request for comments.

SUMMARY: The Civilian Agency Acquisition Council and the Defense Acquisition Regulations Council (Councils) have agreed on an interim rule amending the Federal Acquisition Regulation (FAR) to implement the Dominican Republic-Central America-United States Free Trade Agreement with respect to El Salvador, Honduras, and Nicaragua.

DATES: *Effective Date:* June 28, 2006.

Comment Date: Interested parties should submit written comments to the FAR Secretariat on or before August 28, 2006 to be considered in the formulation of a final rule.

ADDRESSES: Submit comments identified by FAC 2005–10, FAR case 2006–006 by any of the following methods:

- Federal eRulemaking Portal: *http://www.regulations.gov*. Follow the instructions for submitting comments.
- Agency Web site: *http://www.acquisition.gov/far/ProposedRules/comments.htm*. Click on the FAR case number to submit comments.
- E-mail: *farcase.2006–006@gsa.gov*. Include FAC 2005–10, FAR case 2006–006, in the subject line of the message.
- Fax: 202–501–4067.
- Mail: General Services Administration, Regulatory Secretariat (VIR), 1800 F Street, NW, Room 4035, ATTN: Laurieann Duarte, Washington, DC 20405.

Instructions: Please submit comments only and cite FAC 2005–10, FAR case 2006–006, in all correspondence related to this case. All comments received will be posted without change to *http://www.acquisition.gov/far/ProposedRules/comments.htm*, including any personal and/or business confidential information provided.

FOR FURTHER INFORMATION CONTACT For clarification of content, contact Ms. Gloria Sochon, Procurement Analyst, at (202) 219–0311. Please cite FAC 2005–10, FAR case 2006–006. For information pertaining to status or publication schedules, contact the FAR Secretariat at (202) 501–4755.

SUPPLEMENTARY INFORMATION:

A. Background

This rule amends FAR Part 25 and the clauses at 52.212–3, Offeror Representations and Certifications—Commercial Items, 52.212–5, Contract Terms and Conditions Required to Implement Statutes or Executive Orders—Commercial Items, 52.225–3, Buy American Act—Free Trade Agreements—Israeli Trade Act, 52.225–4, Buy American Act—Free Trade Agreements—Israeli Trade Act Certificate, 52.225–5, Trade Agreements, 52.225–11, Buy American Act—Construction Materials under Trade Agreements, and 52.225–12, Notice of Buy American Act Requirement—Construction Materials under Trade Agreements, to implement the Dominican Republic—Central America—United States Free Trade Agreement (CAFTA-DR) with respect to El Salvador, Honduras, and Nicaragua. Congress approved the CAFTA-DR in the Dominican Republic—Central America—United States Free Trade Agreement Implementation Act (Public Law 109–53). Other signatory countries to the CAFTA-DR are Costa Rica, the Dominican Republic, and Guatemala. These regulations will be amended when the CAFTA-DR takes effect for these other countries. The CAFTA-DR waives the applicability of the Buy American Act for some foreign supplies and construction materials from El Salvador, Honduras, and Nicaragua and specifies procurement procedures designed to ensure fairness in the acquisition of supplies and services.

The excluded services for the CAFTA-DR are the same as for the Chile FTA and NAFTA. For supply and service contracts, the CAFTA-DR has the same threshold as the other FTAs ($64,786), except the Morocco FTA and the NAFTA with respect to supply contracts involving Canada. For construction contracts, CAFTA-DR has the same threshold as the Chile FTA, Morocco FTA, Singapore FTA, and the WTO GPA ($7,407,000), lower than the NAFTA threshold of $8,422,165.

This is not a significant regulatory action and, therefore, was not subject to review under Section 6(b) of Executive Order 12866, Regulatory Planning and Review, dated September 30, 1993. This rule is not a major rule under 5 U.S.C. 804.

B. Regulatory Flexibility Act

The interim rule is not expected to have a significant economic impact on a substantial number of small entities within the meaning of the Regulatory Flexibility Act, 5 U.S.C. 601, *et seq.* Although the rule opens up Government procurement to the goods and services of El Salvador, Honduras, and Nicaragua, the Councils do not anticipate any significant economic impact on U.S. small businesses. The Department of Defense only applies the trade agreements to the non-defense items listed at DFARS 225.401–70, and acquisitions that are set aside for small businesses are exempt. Therefore, an Initial Regulatory Flexibility Analysis has not been performed. The Councils will consider comments from small entities concerning the affected FAR parts 25 and 52 in accordance with 5 U.S.C. 610. Interested parties must submit such comments separately and should cite 5 U.S.C 601, *et seq.* (FAC 2005–10, FAR case 2006–006), in correspondence.

C. Paperwork Reduction Act

The Paperwork Reduction Act does not apply because the changes to the FAR do not impose information collection requirements that require the approval of the Office of Management and Budget under 44 U.S.C. 3501, *et seq.*

D. Determination to Issue an Interim Rule

A determination has been made under the authority of the Secretary of Defense (DoD), the Administrator of General Services (GSA), and the Administrator of the National Aeronautics and Space Administration (NASA) that urgent and compelling reasons exist to promulgate this interim rule without prior opportunity for public comment. This action is necessary because the CAFTA-DR took effect with respect to El Salvador on March 1, 2006, and took effect with respect to Honduras and Nicaragua on April 1, 2006. However, pursuant to Public Law 98–577 and FAR 1.501, the Councils will consider public comments received in response to this interim rule in the formation of the final rule.

List of Subjects in 48 CFR Parts 25 and 52

Government procurement.

Dated: June 20, 2006.

Ralph De Stefano,

Director, Contract Policy Division.

■ Therefore, DoD, GSA, and NASA amend 48 CFR parts 25 and 52 as set forth below:

■ 1. The authority citation for 48 CFR parts 25 and 52 continues to read as follows:

Authority: 40 U.S.C. 121(c); 10 U.S.C. chapter 137; and 42 U.S.C. 2473(c).

PART 25—FOREIGN ACQUISITION

■ 2. Amend section 25.003 by—

■ a. Revising the definition ''Caribbean Basin country''

■ b. Revising paragraph (2) of the definition ''Designated country'' and removing from paragraph (4) of the definition ''El Salvador,'', ''Honduras,'', and ''Nicaragua,'' and

■ c. Revising the definition ''Free Trade Agreement country''.

■ The revised text reads as follows:

25.003 Definitions.

* * * * *

Caribbean Basin country means any of the following countries: Antigua and Barbuda, Aruba, Bahamas, Barbados, Belize, British Virgin Islands, Costa Rica, Dominica, Dominican Republic, Grenada, Guatemala, Guyana, Haiti,

Jamaica, Montserrat, Netherlands Antilles, St. Kitts and Nevis, St. Lucia, St. Vincent and the Grenadines, or Trinidad and Tobago.

* * * * *

Designated country * * *

(1) * * *

(2) A Free Trade Agreement country (Australia, Canada, Chile, El Salvador, Honduras, Mexico, Morocco, Nicaragua, or Singapore);

* * * * *

Free Trade Agreement country means Australia, Canada, Chile, El Salvador, Honduras, Mexico, Morocco, Nicaragua, or Singapore.

* * * * *

■ 3. Amend section 25.400 by removing from the end of paragraph (a)(2)(iv) the word ''and'' adding at the end of paragraph (a)(2)(v) the word ''and''; and adding a new paragraph (a)(2)(vi) to read as follows:

25.400 Scope of Subpart.

(a) * * *

(2) * * *

(i) * * *

(vi) CAFTA-DR (The Dominican Republic-Central America-United States Free Trade Agreement, as approved by Congress in the Dominican Republic-Central America-United States Free Trade Agreement Implementation Act (Pub. L. 109–53);

* * * * *

25.401 [Amended]

■ 4. Amend section 25.401 in paragraph (b), in the table heading, by removing from the third column ''NAFTA and Chile FTA'' and adding ''NAFTA, CAFTA-DR, and Chile FTA'' in its place.

25.402 [Amended]

■ 5. Amend section 25.402 in paragraph (b), in the table, by adding after ''Australia FTA'' the entry ''CAFTA-DR (El Salvador, Honduras, and Nicaragua'') and in its corresponding line items ''64,786'', ''64,786'', and ''7,407,000'', respectively.

■ 6. Amend section 25.405 by adding a new sentence to the end of the paragraph to read as follows:

25.405 Caribbean Basin Trade Initiative.

* * * In accordance with Section 201 (a)(3) of the Dominican Republic—Central America—United States Free Trade Implementation Act (Pub. L. 109–53), when the CAFTA-DR agreement enters into force with respect to a country, that country is no longer designated as a beneficiary country for purposes of the Caribbean Basin Economic Recovery Act, and is therefore no longer included in the definition of ''Caribbean Basin country'' for purposes of the Caribbean Basin Trade Initiative.

PART 52—SOLICITATION PROVISIONS AND CONTRACT CLAUSES

■ 7. Amend section 52.212–3 by—

■ a. Revising the date of the clause;

■ b. Removing from paragraph (g)(1)(i) ''and ''United States'' and adding ''''Free Trade Agreement country,'' and ''United States'''' in its place;

■ c. Revising paragraph (g)(1)(ii); and

■ d. Revising the paragraph headings for (g)(2) and (g)(3) by removing the parenthetical ''(JAN 2004)''.

■ The revised text reads as follows:

52.212–3 Offeror Representations and Certifications—Commercial Items.

* * * * *

OFFEROR REPRESENTATIONS AND CERTIFICATIONS—COMMERCIAL ITEMS (JUN 2006)

* * * * *

(g)(1) * * *

(i) * * *

(ii) The offeror certifies that the following supplies are Free Trade Agreement country end products (other than Moroccan end products) or Israeli end products as defined in the clause of this solicitation entitled ''Buy American Act—Free Trade Agreements—Israeli Trade Act'':

Free Trade Agreement Country End Products (Other than Moroccan End Products) or Israeli End Products:

LINE ITEM NO.	COUNTRY OF ORIGIN

[List as necessary]

* * * * *

52.212–5 [Amended]

■ 8. Amend section 52.212–5 by—

■ a. Revising the date of the clause to read ''(JUN 2006)'';

■ b. Removing from paragraph (b)(24)(i) ''(APR 2006)'' and adding ''(JUN 2006)'' in its place and adding to the end of the paragraph '', and 109–53''; and

■ c. Removing from paragraph (b)(25) ''(APR 2006)'' and adding ''(JUN 2006)'' in its place.

■ 9. Amend section 52.225–3 by—

■ a. Revising the date of the clause;

■ b. Removing from paragraph (a) the definition ''End product of Australia, Canada, Chile, Mexico, or Singapore''; and adding, in alphabetical order, the definitions ''Free Trade Agreement country'', ''Free Trade Agreement country end product'', and ''Moroccan end product''; and

■ c. Revising the last sentence in paragraph (c).

■ The revised and added text reads as follows:

52.225–3 Buy American Act—Free Trade Agreements—Israeli Trade Act.

* * * * *

BUY AMERICAN ACT—FREE TRADE AGREEMENTS—ISRAELI TRADE ACT (JUN 2006)

* * * * *

Definitions. * * *

* * * * *

Free Trade Agreement country means Australia, Canada, Chile, El Salvador, Honduras, Mexico, Morocco, Nicaragua, or Singapore.

Free Trade Agreement country end product means an article that—

(1) Is wholly the growth, product, or manufacture of a Free Trade Agreement country; or

(2) In the case of an article that consists in whole or in part of materials from another country, has been substantially transformed in a Free Trade Agreement country into a new and different article of commerce with a name, character, or use distinct from that of the article or articles from which it was transformed. The term refers to a product offered for purchase under a supply contract, but for purposes of calculating the value of the end product includes services (except transportation services) incidental to the article, provided that the value of those incidental services does not exceed that of the article itself.

* * * * *

Moroccan end product means an article that—

(1) Is wholly the growth, product, or manufacture of Morocco; or

(2) In the case of an article that consists in whole or in part of materials from another country, has been substantially transformed in Morocco into a new and different article of commerce with a name, character, or use distinct from that of the article or articles from which it was transformed. The term refers to a product offered for purchase under a supply contract, but

for purposes of calculating the value of the end product includes services (except transportation services) incidental to the article, provided that the value of those incidental services does not exceed that of the article itself.

* * * * *

(c) * * * If the Contractor specified in its offer that the Contractor would supply a Free Trade Agreement country end product (other than a Moroccan end product) or an Israeli end product, then the Contractor shall supply a Free Trade Agreement country end product (other than a Moroccan end product), an Israeli end product or, at the Contractor's option, a domestic end product.

* * * * *

■ 10. Amend section 52.225–4 by—

■ a. Revising the date of the clause;

■ b. Revising the second sentence of paragraph (a); and

■ c. Revising paragraph (b).

■ The revised text reads as follows:

52.225–4 Buy American Act—Free Trade Agreements—Israeli Trade Act Certificate.

* * * * *

BUY AMERICAN ACT—FREE TRADE AGREEMENTS—ISRAELI TRADE ACT CERTIFICATE (JUN 2006)

(a) * * * The terms ''component,'' ''domestic end product,'' ''end product,'' ''foreign end product,'' ''Free Trade Agreement country,'' ''Free Trade Agreement country end product,'' ''Israeli end product,'' ''Moroccan end product,'' and ''United States'' are defined in the clause of this solicitation entitled ''Buy American Act—Free Trade Agreements—Israeli Trade Act.''

(b) The offeror certifies that the following supplies are Free Trade Agreement country end products (other than Moroccan end products) or Israeli end products as defined in the clause of this solicitation entitled ''Buy American Act—Free Trade Agreements—Israeli Trade Act'':

Free Trade Agreement Country End Products (Other than Moroccan End Products) or Israeli End Products:

LINE ITEM NO.	COUNTRY OF ORIGIN
_____	_____
_____	_____
_____	_____

[List as necessary]

* * * * *

■ 11. Amend section 52.225–5 by—

■ a. Revising the date of the clause; and

■ b. In paragraph (a), in the definition ''Designated country'', revising paragraph (2), and removing from paragraph (4) ''El Salvador'', ''Honduras,'', and ''Nicaragua,''.

■ The revised text reads as follows:

52.225–5 Trade Agreements.

* * * * *

TRADE AGREEMENTS (JUN 2006)

* * * * *

(a) *Definitions.* * * *

Designated country * * *

(1) * * *

(2) Free Trade Agreement country (Australia, Canada, Chile, El Salvador, Honduras, Mexico, Morocco, Nicaragua, or Singapore).

* * * * *

■ 12. Amend section 52.225–11 by—

■ a. Revising the date of the clause;

■ b. In paragraph (a), in the definition ''Designated country'', revising paragraph (2), and removing from paragraph (4) ''El Salvador,'' ''Honduras,'' and Nicaragua,''; and

■ c. Revising Alternate I.

■ The revised text reads as follows:

52.225–11 Buy American Act—Construction Materials under Trade Agreements.

* * * * *

BUY AMERICAN ACT—CONSTRUCTION MATERIALS UNDER TRADE AGREEMENTS (JUN 2006)

* * * * *

(a) *Definitions.* * * *

Designated country * * *

(2) Free Trade Agreement country (Australia, Canada, Chile, El Salvador, Honduras, Mexico, Morocco, Nicaragua, or Singapore);

* * * * *

Alternate I ''(JUN 2006)''. As prescribed in 25.1102(c)(3), add the following definition of ''Mexican construction material'' to paragraph (a) of the basic clause, and substitute the following paragraphs (b)(1) and (b)(2) for paragraphs (b)(1) and (b)(2) of the basic clause:

Mexican construction material means a construction material that—

(1) Is wholly the growth, product, or manufacture of Mexico; or

(2) In the case of a construction material that consists in whole or in part of materials from another country, has been substantially transformed in Mexico into a new and different construction material distinct from the materials from which it was transformed.

(b) *Construction materials.* (1) This clause implements the Buy American Act (41 U.S.C. 10a - 10d) by providing a preference for domestic construction material. In addition, the Contracting Officer has determined that the WTO GPA and all the Free Trade Agreements except NAFTA apply to this acquisition. Therefore, the Buy American Act restrictions are waived for designated country construction materials other than Mexican construction materials.

(2) The Contractor shall use only domestic or designated country construction material other than Mexican construction material in performing this contract, except as provided in paragraphs (b)(3) and (b)(4) of this clause.

■ 13. In section 52.225–12, amend Alternate II by revising the introductory text; removing paragraph (a); and revising paragraph (d)(1) and the introductory text of paragraph (d)(3) to read as follows:

52.225–12 Notice of Buy American Act Requirement—Construction Materials Under Trade Agreements.

* * * * *

Alternate II ''(JUN 2006)''. As prescribed in 25.1102(d)(3), add the definition of ''Mexican construction material'' to paragraph (a) and substitute the following paragraph (d) for paragraph (d) of the basic provision:

* * * * *

(d) *Alternate offers.* (1) When an offer includes foreign construction material, except foreign construction material from a designated country other than Mexico, that is not listed by the Government in this solicitation in paragraph (b)(3) of FAR clause 52.225–11, the offeror also may submit an alternate offer based on use of equivalent domestic or designated country construction material other than Mexican construction material.

* * * * *

(3) If the Government determines that a particular exception requested in accordance with paragraph (c) of FAR clause 52.225–11 does not apply, the Government will evaluate only those offers based on use of the equivalent domestic or designated country construction material other than Mexican construction material. An offer based on use of the foreign construction material for which an exception was requested—

* * * * *

[FR Doc. 06–5707 Filed 6–27–06; 8:45 am]

BILLING CODE 6820–EP–S

DEPARTMENT OF DEFENSE

GENERAL SERVICES ADMINISTRATION

NATIONAL AERONAUTICS AND SPACE ADMINISTRATION

48 CFR Part 31

[FAC 2005–10; FAR Case 2004–014; Item VI; Docket 2006–0020, Sequence 7]

RIN 9000–AK19

Federal Acquisition Regulation; FAR Case 2004–014, Buy-Back of Assets

AGENCIES: Department of Defense (DoD), General Services Administration (GSA), and National Aeronautics and Space Administration (NASA).

ACTION: Final rule.

SUMMARY: The Civilian Agency Acquisition Council and the Defense Acquisition Regulations Council (Councils) have agreed on a final rule amending the Federal Acquisition Regulation (FAR) by revising the contract cost principle regarding depreciation costs. The final rule adds language which addresses the allowability of depreciation costs of reacquired assets involved in a sale and leaseback arrangement.

DATES: *Effective Date:* July 28, 2006.

FOR FURTHER INFORMATION CONTACT: For clarification of content, contact Mr. Jeremy Olson, at (202) 501–4755. Please cite FAC 2005–10, FAR case 2004–014. For information pertaining to status or publication schedules, contact the FAR Secretariat at (202) 501–3221.

SUPPLEMENTARY INFORMATION:

A. Background

In response to public comments related to proposed language at FAR 31.205–16 regarding the recognition of gains and losses associated with a sale and leaseback arrangement (submitted under FAR case 2002–008 by the FAR Part 31 Ad Hoc Committee), the Committee revised FAR 31.205–16 to state that the disposition date is the date of the sale and leaseback arrangement. FAR case 2002–008 addressed three cost principles. A new case, FAR case 2004–005, was later split-off and only addressed sale and leaseback arrangements.

During the deliberations of FAR case 2002–008, DCAA brought to the Committee's attention a concern regarding the cost treatment when a contractor subsequently re-acquires title to an asset under a sale and leaseback arrangement. The Committee recognized this concern, not just for sale and leaseback arrangements, but also for assets that are purchased, depreciated, sold, and subsequently repurchased. As such, the issue involves a myriad of situations where a contractor depreciates an asset or charges cost of ownership in lieu of lease costs, disposes of that asset, and then reacquires the asset.

For example, in a sale and leaseback arrangement, a contractor may purchase an asset in 2001. The contractor then enters into a sale and leaseback arrangement in 2004, with a ten year lease. At the end of 2014, the contractor reacquires the asset. The question is if and how much the contractor can charge for depreciation costs or usage charge related to that asset.

In addition, consider a purchase of an asset in 2003 (without a sale leaseback arrangement). The contractor depreciates the asset for 15 years, and then in 2018 sells the asset. In 2020, the contractor reacquires the asset. Again the question is if and how much the contractor can charge for depreciation costs or usage charges related to the asset.

The Committee recognized this issue required research and deliberation. The Committee therefore recommended that the DAR Council establish a new case to address this buyback issue. The DAR Council concurred with the recommendation, established the subject case (FAR case 2004–014), and assigned the case to the FAR Acquisition Finance Team.

On August 31, 2004, the FAR Acquisition Finance Team issued its report on the subject case. The report noted that there are situations when a contractor can and will reacquire an asset after relinquishing title, in either a sale and leaseback arrangement or simply a typical sale and subsequent repurchase. After extensive discussion within the Team and respective members' Agencies, the Team concluded that the only area that currently requires coverage is a sale and leaseback arrangement.

The report noted that a contractor should not benefit or be penalized for entering into a sale and leaseback arrangement, *i.e.*, the Government should reimburse the contractor the same amount for the subject asset as if the contractor had retained title throughout the service life of the asset. Therefore, the Team recommended revised language for the determination of allowable depreciation expense that includes consideration of—

- The depreciation expense taken prior to the sale and leaseback arrangement;
- Any gain or loss recognized in accordance with FAR 31.205–16(b); and
- Any depreciation expense included in the calculation of the normal cost of ownership for the limitations at FAR 31.205–36(b)(2) and 31.205–11(h)(1).

A proposed rule was published in the **Federal Register** at 70 FR 34080, June 13, 2005. In response to the proposed rule, comments were received from two commenters. These commenters oppose the proposed rule, asserting that the rule penalizes contractors, ignores GAAP and CAS, ignores the requirement to pay a contractor a reasonable cost, and imposes an administrative burden. In addition, one commenter asserts that the rule would cause a situation where a given asset's value and allowable depreciation will differ depending on the relationships of the parties from whom the asset is acquired. The Councils disagree with each of the commenters assertions. As such, the final rule is identical to the proposed rule published on June 13, 2005.

Public Comments

1. Contractor is penalized under proposed rule.

Comment: The commenters assert that the proposed rule is not consistent with the Government position that a contractor should not benefit or be penalized for entering into a sale and leaseback arrangement. The commenters further assert that the recent changes to FAR 31.205–11, 31.205–16, and 31.205–36 have constructed parameters that penalize a contractor for having owned its facilities at any time during contract performance. The commenters state that these rules ensure the Government never pays more than the initial capitalized cost of an asset regardless of changes in ownership, changes in invested capital or changes in market rate.

Councils' Response: When a contractor purchases an asset and holds that asset for the entire period of contact performance, the Government pays no more than the initial capitalized cost of an asset. This has been the longstanding policy of the Government. The Councils believe this same policy should apply when a contractor re-acquires an asset for which there was a sale and leaseback arrangement, *i.e.*, the Government should pay no more than the initial capitalized cost of the asset. The Councils believe the proposed rule accomplishes this objective.

2. GAAP and CAS 404.

Comment: The commenters assert that limiting allowable depreciation costs to that which would have resulted if the contractor had retained title throughout the service life of the asset ignores

fundamental Cost Accounting Standard (CAS) 404 requirements and Generally Accepted Accounting Principles (GAAP) for an asset to be capitalized at its purchase price, even if that purchase is the reacquisition of a previously owned asset.

Councils' Response: CAS provides criteria for measuring, assigning, and allocating costs for CAS-covered contracts. However, FAR part 31 provides the criteria for allowability of those costs. Under the proposed and final rules, the costs are measured, assigned, and allocated in accordance with CAS for contracts that are subject to CAS 404. The proposed and final rules provide for a limitation on the allowability of those measured, assigned, and allocated costs. Thus, the proposed rule does not conflict with CAS.

In regards to GAAP, there are a number of cost principles, as well as some cost accounting standards, that deviate from GAAP. This deviation occurs for a variety of reasons. In many cases, the deviation is necessary because GAAP is focused on reporting to investors, while FAR focuses on cost reimbursement for Government contracts.

In the subject case, the Councils believe that neither CAS nor GAAP provide adequate coverage when a contractor re-acquires an asset that was part of a sale and leaseback arrangement. The Councils believe this final rule is necessary to provide for consistent reimbursement treatment for capital assets, *i.e.,* the Government pays no more than the initial capitalized cost of the asset.

3. Contractor should be reimbursed a reasonable cost.

Comment: The commenters assert that the proposed rule ignores the basic principle that a contractor should be reimbursed for reasonable cost incurred in the course of business.

Councils' Response: The Councils do not believe the contractor is reimbursed an unreasonable cost under the proposed rule. The Councils believe the longstanding policy of reimbursement based on the initial capitalized cost is reasonable. The Councils further believe it is unreasonable to reimburse a contractor for additional costs merely because it sold an asset and then chose to re-acquire it shortly afterwards.

4. Administrative burden.

Comment: The commenters state that the administrative time required to document and track the ownership trail of the asset will become needlessly complex and excessively burdensome.

Councils' Response: In drafting the proposed rule, the Councils considered the administrative burden of tracking these assets for long periods of time. The application of this provision is limited to instances where the asset generated either depreciation expense or cost of money during the most recent accounting period prior to the date of reacquisition. The Councils do not believe it is an administrative burden to obtain the necessary records in such cases, since the sale and leaseback arrangement would have expired no earlier than the accounting period prior to when the asset is re-acquired. The Councils note that the application period for re-acquired assets is also consistent with CAS 404–50(d)(1), which provides the capitalization criteria for the acquisition of assets resulting from a business combination.

5. Asset value and allowable depreciation differ based on relationships of the parties.

Comment: One commenter asserts that the rule would cause a situation where a given asset's value and allowable depreciation will differ depending on the relationships of the parties from whom the asset is acquired. The commenter states that when a contractor that owns the building and then re-acquires the asset is compared to a contractor that is conducting business under an operating lease, the contractor that leases the building is reimbursed significantly more costs than the contractor that owned the building. The commenter asserts that the contractor that owned the building is forced to absorb millions of dollars of costs deemed unallowable for Government costing purposes.

Team Response: The subject rule does not establish a new policy of providing differing reimbursement based on whether the contractor leases or owns the asset (this is already an established policy). Under FAR part 31, a contractor that enters into an operating lease is reimbursed based on actual rental payments made. On the other hand, a contractor that purchases an asset is reimbursed based on the actual costs of ownership, which includes depreciation. As a result, the amount a contractor is reimbursed differs depending on whether the contractor leases or owns the asset. Under the subject rule, the reimbursement for purchased assets continues to be based on cost of ownership, i.e., the basis for reimbursement is the initial capitalized cost of the asset.

This is not a significant regulatory action and, therefore, was not subject to review under Section 6(b) of Executive Order 12866, Regulatory Planning and Review, dated September 30, 1993. This rule is not a major rule under 5 U.S.C. 804.

B. Regulatory Flexibility Act

The Department of Defense, the General Services Administration, and the National Aeronautics and Space Administration certify that this final rule will not have a significant economic impact on a substantial number of small entities within the meaning of the Regulatory Flexibility Act, 5 U.S.C. 601, *et seq.*, because most contracts awarded to small entities use simplified acquisition procedures or are awarded on a competitive, fixed-price basis, and do not require application of the cost principles and procedures discussed in this rule. For Fiscal Year 2003, only 2.4% of all contract actions were cost contracts awarded to small business.

C. Paperwork Reduction Act

The Paperwork Reduction Act does not apply because the proposed changes to the FAR do not impose information collection requirements that require the approval of the Office of Management and Budget under 44 U.S.C. 3501, *et seq.*

List of Subjects in 48 CFR Part 31

Government procurement.

Dated: June 20, 2006.

Linda Nelson,

Deputy Director, Contract Policy Division.

■ Therefore, DoD, GSA, and NASA amend 48 CFR part 31 as set forth below:

PART 31–CONTRACT COST PRINCIPLES AND PROCEDURES

■ 1. The authority citation for 48 CFR part 31 continues to read as follows:

Authority: 40 U.S.C. 121(c); 10 U.S.C. chapter 137; and 42 U.S.C. 2473(c).

■ 2. Amend section 31.205–11 by revising paragraph (g); removing paragraph (h); and redesignating paragraph (i) as (h). The revised text reads as follows:

31.205–11 Depreciation.

* * * * *

(g) Whether or not the contract is otherwise subject to CAS the following apply:

(1) The requirements of 31.205–52 shall be observed.

(2) In the event of a write-down from carrying value to fair value as a result of impairments caused by events or changes in circumstances, allowable depreciation of the impaired assets is limited to the amounts that would have been allowed had the assets not been

written down (see 31.205–16(g)). However, this does not preclude a change in depreciation resulting from other causes such as permissible changes in estimates of service life, consumption of services, or residual value.

(3)(i) In the event the contractor reacquires property involved in a sale and leaseback arrangement, allowable depreciation of reacquired property shall be based on the net book value of the asset as of the date the contractor originally became a lessee of the property in the sale and leaseback arrangement—

(A) Adjusted for any allowable gain or loss determined in accordance with 31.205–16(b); and

(B) Less any amount of depreciation expense included in the calculation of the amount that would have been allowed had the contractor retained title under 31.205–11(h)(1) and 31.205–36(b)(2).

(ii) As used in this paragraph (g)(3), reacquired property is property that generated either any depreciation expense or any cost of money considered in the calculation of the limitations under 31.205–11(h)(1) and 31.205–36(b)(2) during the most recent accounting period prior to the date of reacquisition.

* * * * *

31.205–16 [Amended]

■ 3. Amend section 31.205–16 by—

■ a. Removing from the introductory text of paragraph (b) ''31.205–11(i)(1)'' and adding ''31.205–11(h)(1)'' in its place; and

■ b. Removing from paragraph (c) ''31.205–11(i)'' and adding ''31.205–11(h)'' in its place.

[FR Doc. 06–5706 Filed 6–27–06; 8:45 am]

BILLING CODE 6820–EP–S

DEPARTMENT OF DEFENSE

GENERAL SERVICES ADMINISTRATION

NATIONAL AERONAUTICS AND SPACE ADMINISTRATION

48 CFR Parts 8, 33, and 52

[FAC 2005–10; Item VII; Docket 2006–0021]

Federal Acquisition Regulation; Technical Amendments

AGENCIES: Department of Defense (DoD), General Services Administration (GSA), and National Aeronautics and Space Administration (NASA).

ACTION: Final rule.

SUMMARY: This document amends the Federal Acquisition Regulation (FAR) to make editorial changes.

DATES: Effective Date: June 28, 2006.

FOR FURTHER INFORMATION CONTACT The FAR Secretariat, Room 4035, GS Building, Washington, DC, 20405, (202) 501–4755, for information pertaining to status or publication schedules. Please cite FAC 2005–10, Technical Amendments.

SUPPLEMENTARY INFORMATION:

List of Subjects in 48 CFR Parts 8, 33, and 52

Government procurement.

Dated: June 20, 2006.

Ralph De Stefano,

Director, Contract Policy Division.

■ Therefore, DoD, GSA, and NASA amend 48 CFR parts 8, 33, and 52 as set forth below:

■ 1. The authority citation for 48 CFR parts 8, 33, and 52 continues to read as follows:

Authority: 40 U.S.C. 121(c); 10 U.S.C. chapter 137; and 42 U.S.C. 2473(c).

PART 8—REQUIRED SOURCES OF SUPPLIES AND SERVICES

■ 2. Revise section 8.714(a)(1) and (2) to read as follows:

8.714 Communications with the central nonprofit agencies and the Committee.

(a) * * *

(1) National Industries for the Blind, 1310 Braddock Place, Alexandria, VA 22314–1691, (703) 310–0500; and

(2) NISH, 8401 Old Courthouse Road, Vienna, VA 22182, (571) 226–4660.

* * * * *

PART 33—PROTESTS, DISPUTES, AND APPEALS

33.102 [Amended]

■ 3. Amend section 33.102 by removing from the end of paragraph (b)(1) the word ''and''; and by removing the period from the end of paragraph (b)(2) and adding ''; and'' in its place.

PART 52—SOLICITATION PROVISIONS AND CONTRACT CLAUSES

■ 4. Amend section 52.208–9 by revising the date of the clause and paragraphs (c)(1) and (2) to read as follows:

52.208–9 Contractor Use of Mandatory Sources of Supply or Services.

* * * * *

CONTRACTOR USE OF MANDATORY SOURCES OF SUPPLY OR SERVICES (JUN 2006)

* * * * *

(c) * * *

(1) National Industries for the Blind, 1310 Braddock Place, Alexandria, VA 22314–1691, (703) 310–0500; and

(2) NISH, 8401 Old Courthouse Road, Vienna, VA 22182, (571) 226–4660.

(End of clause)

■ 5. Amend section 52.212–3 by revising the date of the clause; and removing from the heading of paragraph (h) ''Executive Order 12549'' and adding ''Executive Order 12689'' in its place. The revised text reads as follows:

52.212–3 Offeror Representations and Certifications—Commercial Items.

* * * * *

OFFEROR REPRESENTATIONS AND CERTIFICATIONS—COMMERCIAL ITEMS (JUN 2006)

* * * * *

■ 6. Amend section 52.225–11 by revising the date of the clause; and removing from paragraph (b)(2) the comma after ''or'' in the first line. The revised text reads as follows:

52.225–11 Buy American Act—Construction Materials under Trade Agreements.

* * * * *

BUY AMERICAN ACT—CONSTRUCTION MATERIALS UNDER TRADE AGREEMENTS (JUN 2006)

* * * * *

[FR Doc. 06–5705 Filed 6–27–06; 8:45 am]

BILLING CODE 6820–EP–S

DEPARTMENT OF DEFENSE

GENERAL SERVICES ADMINISTRATION

NATIONAL AERONAUTICS AND SPACE ADMINISTRATION

48 CFR Chapter 1

Docket FAR—2006—0023

Federal Acquisition Regulation; Federal Acquisition Circular 2005–10; Small Entity Compliance Guide

AGENCIES: Department of Defense (DoD), General Services Administration (GSA), and National Aeronautics and Space Administration (NASA).

ACTION: Small Entity Compliance Guide.

SUMMARY: This document is issued under the joint authority of the Secretary of Defense, the Administrator of General Services and the Administrator of the National Aeronautics and Space Administration. This *Small Entity Compliance Guide* has been prepared in accordance with Section 212 of the Small Business

Regulatory Enforcement Fairness Act of 1996. It consists of a summary of rules appearing in Federal Acquisition Circular (FAC) 2005–10 which amend the FAR. An asterisk (*) next to a rule indicates that a Regulatory Flexibility Analysis has been prepared. Interested parties may obtain further information regarding these rules by referring to FAC 2005–10 which precedes this document. These documents are also available via the Internet at *http://www.acquisition.gov/far*.

FOR FURTHER INFORMATION CONTACT

Laurieann Duarte, FAR Secretariat, (202) 501–4225. For clarification of content, contact the analyst whose name appears in the table below.

Item	Subject	FAR case	Analyst
I	Central Contractor Registration—Taxpayer Identification Number (TIN) Validation	2005–007	Jackson.
II	Procedures Related to Procurement Center Representatives	2006–003	Cundiff.
III	Submission of Cost or Pricing Data on Noncommercial Modifications of Commercial Items	2004–035	Olson.
IV	Implementation of Wage Determinations OnLine (WDOL) (Interim)	2005–033	Sochon.
V	Free Trade Agreements—El Salvador, Honduras, and Nicaragua (Interim)	2006–006	Sochon.
VI	Buy-Back of Assets	2004–014	Olson.
VII	Technical Amendments		

SUPPLEMENTARY INFORMATION:

Summaries for each FAR rule follow. For the actual revisions and/or amendments to these FAR cases, refer to the specific item number and subject set forth in the documents following these item summaries.

FAC 2005–10 amends the FAR as specified below:

Item I—Central Contractor Registration—Taxpayer Identification Number (TIN) Validation (FAR Case 2005–007)

The rule adds the process of the government validating a Central Contractor Registration (CCR) registrant's taxpayer identification number (TIN) with the Internal Revenue Service (IRS) to improve the quality of data in the CCR and the federal procurement system. Additionally, the rule removes outdated language requiring modifications of contracts prior to December 31, 2003, regarding CCR.

Item II—Procedures Related to Procurement Center Representatives (FAR Case 2006–003)

This final rule amends the Federal Acquisition Regulation (FAR) to provide internal procedures to cover situations when the FAR requires interaction with a procurement center representative and one has not been assigned to the procuring activity or contract administration office. It primarily impacts contracting officers and procurement center representatives.

Item III—Submission of Cost or Pricing Data on Noncommercial Modifications of Commercial Items (FAR Case 2004–035)

This final rule amends the interim rule issued in FAC 2005–004 and implements an amendment to 10 U.S.C. 2306a. The policy requires that the exception from the requirement to obtain certified cost or pricing data for a commercial item does not apply to noncommercial modifications of a commercial item that are expected to cost, in the aggregate, more than $500,000 or 5 percent of the total price of the contract, whichever is greater. Section 818 of Public Law 108–375, the Ronald W. Reagan National Defense Authorization Act of Fiscal Year 2005 applies to offers submitted, and to modifications of contracts or subcontracts made, on or after June 1, 2005. This new policy results from a statute which changed 10 U.S.C. 2306a. 10 U.S.C. 2306a applies only to contracts or task or delivery orders funded by DoD, NASA, and the Coast Guard. The new policy does, however, also apply to contracts awarded or task or delivery orders placed on behalf of DoD, NASA, or the Coast Guard by an official of the United States outside of those agencies, because the statutory requirement of Section 818 applies to the funds provided by DoD, NASA, or the Coast Guard.

The change to the interim rule clarifies the policy to ensure it is applied properly. The threshold in the rule applies to an instant contract action, not to the total value of all contract actions and, as applicable to subcontractors, the threshold applies to the value of the subcontract, not the value of the prime contract.

Item IV—Implementation of Wage Determinations OnLine (WDOL) (FAR Case 2005–033) (Interim)

This interim rule implements the Department of Labor (DOL) Wage Determinations OnLine (WDOL) internet website as the source for Federal contracting agencies to obtain wage determinations issued by the DOL for service contracts subject to the McNamara-O'Hara Service Contract Act (SCA) and for construction contracts subject to the Davis-Bacon Act (DBA). The rule amends the FAR to direct Federal contracting agencies to obtain DBA and SCA wage determinations from the WDOL website.

The Contracting Officer (CO) will be able to check the WDOL website (*http://www.wdol.gov*) to find the applicable wage determination for a contract action subject to the SCA or DBA. If the WDOL database does not contain the applicable wage determination for a SCA contract action, the CO must use the e98 process to request a wage determination from DOL. The e98 means a DOL approved electronic application, (available at *http://www.wdol.gov*), whereby a contacting officer submits pertinent information to the DOL and requests a wage determination directly from the Wage and Hour Division. With regard to DBA requirements, if the WDOL database does not contain the applicable wage determination for a DBA contract action, the CO must request a wage determination by submitting SF–308 to DOL.

The WDOL and e98 processes replace the paper Standard Forms 98 and 98a. In addition, Standard Forms 99, 98, and 98a are deleted from FAR Part 53. This interim rule also incorporates new geographical jurisdictions for DOL's Wage and Hour Regional Offices and eliminates FAR references to the Government Printing Office (GPO) publication of general wage determinations.

Item V—Free Trade Agreements—El Salvador, Honduras, and Nicaragua (FAR Case 2006–006) (Interim)

This interim rule allows contracting officers to purchase the goods and services of El Salvador, Honduras, and Nicaragua without application of the Buy American Act, if the acquisition is subject to the Free Trade Agreements. The U.S. Trade Representative negotiated the Dominican Republic—Central America-United States Free

Trade Agreement with Costa Rica, El Salvador, Guatemala, Honduras, Nicaragua, and the Dominican Republic. However, the agreements will not all take effect at the same time. This agreement with El Salvador, Honduras, and Nicaragua joins the North American Free Trade Agreement (NAFTA) and the Australia, Chile, Morocco, and Singapore Free Trade Agreements which are already in the FAR. The threshold for applicability of the Dominican Republic—Central America—United States Free Trade Agreement is $64,786 for supplies and services (the same as other Free Trade Agreements to date except Morocco and Canada) and $7,407,000 for construction (the same as all other Free Trade Agreements to date except NAFTA).

Item VI—Buy-Back of Assets (FAR Case 2004–014)

This final rule amends the Federal Acquisition Regulation (FAR) contract cost principle for depreciation costs. The final rule adds language which addresses the allowability of depreciation costs of reacquired assets involved in a sale and leaseback arrangement.

Item VII—Technical Amendments

Editorial changes are made at FAR 8.714, 33.102, and 52.225–11 in order to update references.

Dated: June 20, 2006.

Ralph De Stefano,

Director, Contract Policy Division.

[FR Doc. 06–5704 Filed 6–27–06; 8:45 am]

BILLING CODE 6820–EP–S

Federal Register

Wednesday,
June 28, 2006

Part V

National Credit Union Administration

12 CFR Part 708a

Conversion of Insured Credit Unions to Mutual Savings Banks; Proposed Rule

NATIONAL CREDIT UNION ADMINISTRATION

12 CFR Part 708a

Conversion of Insured Credit Unions to Mutual Savings Banks

AGENCY: National Credit Union Administration (NCUA).

ACTION: Notice of proposed rulemaking with request for comments.

SUMMARY: NCUA proposes to amend its rules regarding the conversion of insured credit unions to mutual savings banks or mutual savings associations. The proposed revisions are primarily intended to improve the information available to members and the board of directors as they consider a possible conversion. The revisions include revised disclosures, revised voting procedures, procedures to facilitate communications among members, and procedures for members to provide their comments to directors before the credit union board votes on a conversion plan.

DATES: Comments must be received on or before August 28, 2006.

ADDRESSES: You may submit comments by any of the following methods (Please send comments by one method only):

- Federal eRulemaking Portal: *http://www.regulations.gov.* Follow the instructions for submitting comments.
- NCUA Web site: *http://www.ncua.gov/RegulationsOpinionsLaws/proposed_regs/proposed_regs.html.* Follow the instructions for submitting comments.
- E-mail: Address to *regcomments@ncua.gov.* Include ''[Your name] Comments on Proposed Rule Part 708a'' in the e-mail subject line.
- Fax: (703) 518–6319. Use the subject line described above for e-mail.
- Mail: Address to Mary Rupp, Secretary of the Board, National Credit Union Administration, 1775 Duke Street, Alexandria, Virginia 22314–3428.
- Hand Delivery/Courier: Same as mail address.

FOR FURTHER INFORMATION CONTACT: Jon J. Canerday, Trial Attorney; Moisette I. Green, Staff Attorney; Frank S. Kressman, Staff Attorney; Paul M. Peterson, Staff Attorney; or Gerard S. Poliquin, Trial Attorney, Office of General Counsel at the above address or telephone number: (703) 518–6540.

SUPPLEMENTARY INFORMATION:

A. Background

NCUA's Current Regulation

Under the Federal Credit Union Act (''FCUA''), a federally insured credit union (''credit union'') may convert to a mutual savings bank or savings association in mutual form (collectively referred to as ''MSBs'') subject to the FCUA and NCUA's implementing regulations. 12 U.S.C. 1785(b)(2); 12 CFR Part 708a. In 1995, NCUA first adopted a rule that specifically addressed conversion or merger of a credit union into an institution other than a credit union. 60 FR 12695 (March 8, 1995). Two of the stated purposes of the rule were: (1) To ensure that transactions take place only pursuant to an informed vote of the credit union's member-owners; and (2) to prevent self-dealing and other abuses by individuals involved in the transactions. *Id.* The rule included, among other things, required voting procedures and disclosures to properly inform members.

In 1998, Congress adopted the Credit Union Membership Access Act (''CUMAA''). CUMAA contains several provisions on the MSB conversion process. It states that a majority of directors must approve a proposal to convert, and that approval of the proposal shall be by the affirmative vote of a majority of the members of the credit union who vote on the proposal. 12 U.S.C. 1785(b)(2)(B). It requires that a credit union provide members notice of the vote 90 days, 60 days, and again 30 days before the vote, 12 U.S.C. 1785(b)(2)(C), and also provide the NCUA Board notice of its intent to convert. 12 U.S.C. 1785(b)(2)(D). And it restricts the ability of directors and senior management to receive economic benefits in connection with the conversion. 12 U.S.C. 1785(b)(2)(F).

CUMAA also provides NCUA a role in the MSB conversion process. It requires that NCUA ''administer[]'' the membership vote on the conversion and empowers NCUA to ''disapprove[] of the methods by which the member vote was taken or procedures applicable to the member vote.'' 12 U.S.C. 1785(b)(2)(G). CUMAA further requires that NCUA adopt rules governing MSB conversions. *Id.* These rules must be: (1) Consistent with the charter conversion rules promulgated by other financial regulators; and (2) no more or less restrictive than rules applicable to charter conversions of other financial institutions. *Id.*

NCUA issued interim final rules shortly after the passage of CUMAA. 63 FR 65532 (Nov. 27, 1998). In the eight years since, NCUA has amended its conversion rules three additional times to address various issues related to conversions and incorporate suggestions from interested parties. 64 FR 28733 (May 27, 1999); 69 FR 8548 (Feb, 24, 2004); and 70 FR 4005 (Jan. 28, 2005). In all of these rulemakings, NCUA has been motivated by the same concerns it expressed during the first rulemaking in 1995: that members are entitled to make an informed decision on a conversion proposal and that they should be protected against the potential for self-dealing by credit union management and directors. Among other things, the current part 708a prescribes required notices to members of the conversion vote, contains mandatory disclosure language and a ban on inaccurate and misleading communications, prohibits certain benefits to directors and senior management officials in connection with the proposed conversion, and sets forth certain required voting procedures and supplemental guidance. 12 CFR part 708a.

Summary of NCUA's Proposed Amendments to the Current Regulation

NCUA continues to acquire information about the MSB conversion process and, based on this greater level of empirical experience, NCUA has determined that there are ways to improve part 708a to better fulfill its purposes. Particularly, NCUA believes the rule can be improved with regard to the flow of information between and among members and board directors concerning the conversion issue.

NCUA recognizes and fully supports the right of a credit union to change its charter to a bank charter. This change, however, is a fundamental shift. When a credit union becomes a bank, for example, the ownership rights of the members change. The statutory and regulatory framework under which the institution operates, including its tax-exempt status, will also change. The services supplied to the members, and the cost of those services to the members, may change as well.

The decision to change to a bank charter belongs to the credit union members. To make this decision, members must be fully informed as to the reasons for the conversion and have time to consider the pros and cons of the proposed conversion. They should have an opportunity to discuss the proposal with other members and to communicate their views to the credit union's directors. NCUA believes that the current conversion process can be improved to facilitate the quality and flow of information about the conversion.

For these reasons, NCUA proposes to make modifications and additions to part 708a. These changes are discussed in detail in the Section-by-Section Analysis that follows. Briefly summarized, the proposal:

• Requires a converting credit union to give advance notice to members that the board intends to vote on a conversion proposal and establishes procedures for members to share their views with directors before they adopt the proposal.

• Clarifies that credit union directors may vote in favor of a conversion proposal only if they have determined the conversion is in the best interests of the members and requires the board of directors submit a certification to NCUA of its support for the conversion proposal and plan.

• Simplifies the ''boxed'' disclosures that a credit union must provide to its members.

• Changes the current requirement for delivery of the boxed disclosures (*i.e.*, with all written communications to members) to require that the disclosures need only be delivered with the 90-, 60- and 30-day member notices.

• Provides for the form of the member ballot and that the ballot must be sent only with the 30-day notice.

• Requires the board of directors to set a voting record date not less than one hundred twenty days before the board notifies the members it is considering adopting a conversion proposal.

• Requires that, after the board has approved an MSB conversion proposal and upon the request of a member, a credit union must disseminate information from that requestor to other members at the requestor's expense.

• States that the members of federally-chartered credit unions (''FCUs'') may request and be granted access to the books and records of a converting credit union under the same terms and conditions that a state-chartered for-profit corporation in the state in which the federal credit union is located must grant access to its shareholders.

• Requires the NCUA Regional Director to make a determination to approve or disapprove the methods and procedures for the membership vote within thirty calendar days of the receipt of the credit union's certification of the member vote and permits any credit union dissatisfied with the determination to appeal to the NCUA Board for a final agency determination.

• Requires a credit union to complete a conversion within one year of the date of receipt of final approval from NCUA of the methods and procedures of the vote.

• Modifies the voting guidelines to include information on the use of voting incentives such as raffles.

NCUA's Rulemaking Authority

The FCUA, as amended by CUMAA, provides NCUA with general rulemaking authority over federally-insured credit unions and specific rulemaking authority over conversions of credit unions to MSBs. This section contains an analysis of NCUA's rulemaking authority and how it applies to this proposed rulemaking.

The FCUA provides the NCUA Board with broad, general rulemaking authority over federal and federally-insured state chartered credit unions:

> Powers of the Board and Administration personnel.—(a) The Board may prescribe rules and regulations for the administration of [the FCUA] (including, but not by way of limitation, the merger, consolidation, and dissolution of corporations organized under this chapter) * * *.

12 U.S.C. 1766a. The FCUA contains numerous provisions on the activities of credit unions, including reorganizations and charter conversions. *See, e.g.*, 12 U.S.C. 1771 and 1785. Section 1785, in particular, has provisions on the conversion of credit unions to MSBs, including establishing specific voting and notice requirements and limitations on benefits for directors and management. Section 1785 also charges NCUA with oversight of the membership vote:

> Oversight of member vote. The member vote concerning charter conversion under this paragraph shall be administered by the Administration, and shall be verified by the Federal or State regulatory agency that would have jurisdiction over the institution after the conversion. If either the Administration or that regulatory agency disapproves of the methods by which the member vote was taken or procedures applicable to the member vote, the member vote shall be taken again, as directed by the Administration or the agency.

12 U.S.C. 1785(b)(2)(G)(ii). The FCUA also gives the NCUA Board specific rulemaking authority over credit union conversions to MSBs as follows:

> (G) Consistent rules. (i) In general. Not later than 6 months after the date of enactment of the Credit Union Membership Access Act the Administration shall promulgate final rules applicable to charter conversions described in this paragraph that are consistent with rules promulgated by other financial regulators, including the Office of Thrift Supervision and the Office of the Comptroller of the Currency. The rules required by this clause shall provide that charter conversion by an insured credit union shall be subject to regulation that is no more or less restrictive than that applicable to charter conversions by other financial institutions.

12 U.S.C. 1785(b)(2)(G)(ii). The key rulemaking provisions are twofold. First, NCUA's rules must be ''consistent with rules promulgated by other financial regulators, including the Office of Thrift Supervision and the Office of the Comptroller of the Currency;'' and, second, NCUA's rules must be ''no more or less restrictive than [those rules] applicable to charter conversions by other financial institutions.'' *Id.*

Because these two provisions contain general directions that do not require the NCUA to adopt specific rules and regulations of other regulators, those provisions are ambiguous on their face. Under established law, NCUA has significant authority to interpret the meaning of those provisions. In *Pauley* v. *BethEnergy Mines*, 501 U.S. 680 (1991), for example, the Supreme Court considered a challenge to a rulemaking initiated by the Department of Labor that empowered it to adopt regulations that ''shall not be more restrictive than'' rulemakings by the Department of Health, Education, and Welfare. The Court stated ''[w]ith respect to the phrase 'not * * * more restrictive than' Congress's intent is similarly clear: The phrase cannot be read except as a delegation of interpretive authority to the Secretary of Labor.'' [1]

NCUA's analysis of the two relevant statutory provisions follows.

a. ''Consistent with rules promulgated by other financial regulators.''

NCUA has carefully considered the meaning of this ''consistency'' language. The FCUA does not further define this provision. CUMAA's legislative history contains scant information on the MSB conversion provisions and provides no insight into the provisions governing NCUA's rulemaking authority over conversions.[2]

The Dictionary defines ''consistent'' as ''1. agreeing or concordant; compatible, not self-contradictory'' and ''2. constantly adhering to the same principles, course, form, etc.'' [3] Accordingly, NCUA views this requirement for consistency as a mandate that NCUA's rules be compatible with or adhering to the same

[1] *Id.* at 624. *See also Mowbray* v. *Kozlowski,* 914 F.2d 593 (4th Cir. 1990) (the court deferred to a state agency's interpretation of an ambiguous statutory scheme involving separate provisions providing that state medicaid eligibility rules should be both less restrictive and more restrictive than federal eligibility rules).

[2] The available legislative history discusses the conversion provisions in the House version of CUMAA. The conversion provisions ultimately included in CUMAA were from the Senate bill. These provisions appear to have been added late in the drafting cycle without accompanying legislative history.

[3] The Random House Webster's Unabridged Dictionary (2d ed. 2001), pg. 434.

principles as the conversion rules of other financial regulators.

A compatibility interpretation makes sense to NCUA. NCUA's rules applicable to conversion from credit unions to MSBs should be compatible with the rules, if any, that govern conversions to new banking entities. In other words, a credit union that wishes to convert to a federally-chartered MSB (''FMSB'') should not encounter insurmountable contradictions between NCUA's rules governing conversions to FMSBs and the existing Office of Thrift Supervision (''OTS'') and Federal Deposit Insurance Corporation (''FDIC'') rules governing the same. If NCUA's rules included requirements contrary to any OTS or FDIC rules governing the same conversion, the conversion could not take place.[4] Likewise, if a credit union wishes to convert to a state-chartered MSB, NCUA's rules should be compatible with the state regulator's rules, if any, governing the same conversion. NCUA believes the proposed rule satisfies this compatibility analysis, but invites commenters to address this topic and, if they disagree, to provide specific examples.

Alternatively, the requirement for consistency may mean a requirement for NCUA's rules to be informed by the same principles that inform the conversion rules of other regulators. As discussed previously, the principles behind NCUA's rulemaking include a desire for an orderly and fair conversion process that takes into account the rights of the credit union's owners (*i.e.*, the members) and ensures that they can make an informed conversion decision. NCUA believes these principles are, generally, the same principles informing the conversion rules of other state and federal regulators. Again, NCUA invites comment on this issue.

b. ''[N]o more or less restrictive than [rules] applicable to charter conversions by other financial institutions.''

NCUA has also carefully considered the meaning of this ''no more or less restrictive'' provision. An identical rule would satisfy this requirement, but it is not possible to fashion an identical rule for several reasons.

First, the FCUA contains certain procedural requirements for credit union to MSB conversions not found in the regulations governing the conversions of other financial institutions. So, for example, the requirement that credit union members receive three notices at 30-day intervals preceding the member vote has no counterpart in the OTS and OCC regulations governing thrift and bank conversions.[5] NCUA's rule, however, must reflect these three notices, and so cannot be identical to the OTS or OCC rules in this regard.

Second, all financial institutions have characteristics that are unique to that type of organization and which translate into different regulatory treatment.[6] For example, conversions of thrifts and banks involve the creation and transfer of securities and involvement of the Securities and Exchange Commission and associated regulatory provisions. Conversion rules governing credit unions cannot be identical to those governing banks or thrifts in this and similar regards.

Finally, the OTS rules for converting MSBs[7] and the Office of the Comptroller of the Currency (''OCC'') rules for converting national banks[8] are different from each other, so that if NCUA attempted to adopt a rule identical to the OTS' rule, then NCUA's rule would not be identical to the OCC's rule. Accordingly, it would be illogical to construe the phrase ''no more or less restrictive'' as meaning ''identical.''

Again, the FCUA and CUMMA legislative history do not provide any definition for ''no more or less restrictive''. NCUA staff engaged in extensive legal research to identify other uses of the phrase. As far as staff could determine, there is no other federal statute that employs the phrase, nor does the phrase appear in any existing federal regulation. The phrase is not used in any existing state code or regulation. While the term appears in a few judicial opinions, the context of those opinions provides no helpful guidance.[9]

As the FCUA charges NCUA with promulgating a rule, NCUA must develop an interpretation of the phrase ''no more or less restrictive.'' We start first with the meaning of ''restrictive.'' According to the dictionary, the definition of ''restrictive'' is ''tending or serving * * * to confine or keep within limits, as of space, action, choice, intensity, or quantity.''[10] In the context of regulatory action, that can be further refined as ''tending to confine action or choice.'' We subdivide this statutory language into its two constituent parts: (1) ''no * * * less restrictive'' and (2) ''no more * * * restrictive.'' We interpret and apply each in turn.

*1. ''No less * * * restrictive than [rules] applicable to charter conversions by other financial institutions.''*

The FCUA states that NCUA's rules should be ''no * * * less restrictive'' than the rules of other regulators. Again, this cannot mean that NCUA must include every restriction found in every regulators' rule. NCUA interprets this phrase as meaning that when NCUA is aware of a particular federal or state law that confines the choices or action of a converting institution, NCUA should consider if that restriction makes sense for a converting credit union in light of the underlying principles that inform NCUA's and other regulators' rulemakings. In accordance with this interpretation, NCUA researched different regulatory provisions adopted by other financial regulators. These provisions are discussed where applicable as part of the Section-by-Section Analysis. NCUA believes that the rule, as proposed, satisfies this element of the FCUA.

*2. ''No more * * * restrictive than [those rules] applicable to charter conversions by other financial institutions.''*

According to the dictionary, the ''no more * * * restrictive'' phrase means NCUA's rulemaking should not tend to confine the converting credit union's actions or choices more than rules of other financial regulators. Which

[4] Current OTS rules on conversion from credit unions to MSBs are found in 12 CFR 543.8 through 543.12. So, for example, if the NCUA required a conversion disclosure that was contrary to a prohibition existing in the OTS rules at the time NCUA promulgated its rules, that could render NCUA's rules inconsistent with the OTS rules. Since the consistency passage refers to the rules of other financial regulators ''including'' both the OTS and OCC, NCUA interprets this requirement to extend to other entities that can regulate a credit union conversion to an MSB. The FDIC has rules regarding application for its insurance which a credit union converting to an MSB must comply with. For conversions to state chartered MSBs, the credit union must also comply with the rules of state regulators.

[5] *Compare* 12 U.S.C. 1785(B)(2)(C) *with* 12 CFR 5.24.

[6] The U.S. Department of Treasury found that ''[a]lthough credit unions have certain characteristics in common with banks and thrifts, (*e.g.*, the intermediation function), they are clearly distinguishable from these other depository institutions in their structural and operational characteristics.'' U.S. DEPT. TREAS., COMPARING CREDIT UNIONS WITH OTHER DEPOSITORY INSTITUTIONS, pg. 6 (Jan. 2001).

[7] 12 CFR parts 563b (Conversions from Mutual to Stock Form) and 575 (Mutual Holding Companies).

[8] 12 CFR 5.24(f) (Conversion of a National Bank to a Federal Savings Association).

[9] *See, e.g., Vermef* v. *Noble*, 2002 LEXIS Wa. Tax 22, (Washington Board of Tax Appeals, January 20, 2002). As far as NCUA can determine, the phrase is not discussed in any major secondary source, including law review articles and Words and Phrases.

[10] This is actually the combination of two definitions. ''Restrictive'' means ''tending or serving to restrict.'' ''Restrict'' means ''to confine or keep within limits, as of space, action, choice, intensity, or quantity.'' Random House Webster's Unabridged Dictionary (2d. ed. 2001), pg. 1642.

actions or choices and which regulators is not clear. In some areas, for example, the OTS has significant limitations on action or choice where the OCC has none. As discussed previously, the FCUA also requires a series of three notices; and this is a restriction that is not found in either the OTS or OCC rules. NCUA concludes that Congress does not intend for NCUA to undertake a ''no more restrictive'' analysis on a provision-by-provision basis or as to every other regulator's rule. Instead, NCUA believes Congress intended NCUA to compare its rule generally against the conversion rules of other like regulators. To meet the ''no more * * * restrictive'' standard, NCUA concludes that its rule, taken in its entirety, should not confine a converting credit union's actions or choices more significantly than the rules of other financial regulators, taken in their entirety, confine the actions or choices of the converting institutions they regulate.

NCUA examined the rules of various financial institution regulatory agencies, including state regulators, the OTS, OCC, and Farm Credit Administration.

The Board first notes that a majority of the states have credit union statutes and regulations that are silent with regard to MSB conversions; apparently meaning that their state charters have no authority to convert to MSBs. Clearly, NCUA's rules are not more restrictive than these state rules and cannot be more restrictive, as the FCUA specifically permits conversions from credit unions to MSBs.

With regard to the state laws and regulations permitting conversions, and the laws and regulations governing conversions overseen by the OTS and OCC, these laws and regulations all share similarities. They all establish procedures for the conversion. They all require certain disclosures be made to the members or stockholders of the converting institution. They all require votes by both the directors and the members or stockholders. And they all require that the converting institution provide certain information to the regulator for purposes of evaluating the conversion or conversion process. These are similarities that NCUA's rule shares with virtually every other regulator's rules, and in this sense NCUA's rules are no more restrictive than other regulators' rules.

The other state and federal laws and regulations that expressly allow for conversions apply a variety of specific requirements to the conversion. Many of those requirements are cited in the Section-by-Section Analysis below as precedent for particular provisions in NCUA's proposal and, in many cases, the NCUA proposal is not more restrictive than the cited precedent. For example, § 708a.5 of both the current and proposed rules requires a credit union to provide NCUA with notice of its intent to convert before the date of the membership vote. NCUA's notice requirements are fairly simple. Several states require much more specificity or analysis in the notification requirements for their converting institutions than the NCUA requires in § 708a.5.[11]

A comparison of the OTS conversion rules[12] to the proposed NCUA rules demonstrates that the OTS rules, not the NCUA rules, are in many ways more restrictive. For example, within the OTS rules there are types of requirements that do not appear in the NCUA rule.[13] These include the requirement to prepare and submit to OTS a three-year post conversion business plan and various requirements related to the issuance of stock, including making a valuation of the bank, determining subscriber rights, and making various stock-related filings.

NCUA's proposed rule is also purely procedural. It contains no substantive restrictions or burdens. This is not true for the rules that affect other conversions. For example, a member of an Iowa credit union that converts to an MSB is entitled to a pro rata distribution of all unencumbered credit union retained and undivided earnings in excess of regulatory required reserves. Iowa Admin. Code r. 189–3.4(8). Similarly, the OCC conversion rule for conversion of a national bank to a mutual savings bank obligates the institution to payoff shareholders who dissent from the conversion.[14] The Iowa rule and OCC rule, not NCUA's rule, are more restrictive in this particular sense as well.

In sum, NCUA believes this proposed rule is well within its statutory rulemaking authority. The rule carries out NCUA's statutory responsibility for oversight and administration of the voting process. The rule ensures that the member vote is fair and legal and the members who vote are informed of important aspects of the conversion. The rule is consistent with rules promulgated by other financial regulators, including the OTS and the OCC. It is also ''no more or less restrictive'' than the rules generally applicable to charter conversions by other financial institutions.

B. Section-by-Section Analysis

708a.1 Definitions

The current § 708a.1 contains definitions for the terms credit union, mutual savings bank, savings association, federal banking agencies, and senior management official.

The proposed § 708a.1 maintains these same definitions. The proposal adds an additional definition for the phrase ''clear and conspicuous,'' meaning ''text that is in bold type in a font at least as large as that used for headings, but in no event smaller than 12 point.'' NCUA invites comment on this definition. The proposal also adds a definition for ''regional director'' to clarify that, for natural person credit unions, it means the NCUA director for the region where the credit union's main office is located and, for corporate credit unions, it means the Director, NCUA Office of Corporate Credit Unions.

708a.2 Authority To Convert

The current § 708a.2 recites the authority of a federally insured credit union to convert to a mutual savings bank or savings association as provided for in the FCUA. The proposed § 708a.2 maintains this same recitation.

708a.3 Board of Directors' Approval and Members' Opportunity To Comment

The current § 708a.3 provides that, if the board of directors of a credit union desires to convert, it must approve a conversion proposal by a majority vote and set a date for a member vote. The members must approve the proposal by the affirmative vote of those members who vote on the proposal.

The proposed rule retains the same requirement for a board vote on the conversion proposal but clarifies that a credit union's directors may vote in favor of a conversion proposal only if they have determined that the conversion is in the best interests of the members. The proposal also contains a new requirement for advance notice to the members of the board's intent to consider a conversion proposal. It retains the requirement for the member vote, although that provision has been moved to § 708a.6 of the proposed rule.

[11] *See* Mich. Comp. Laws 490.373(1)(b), 490.374(1)(b); 2005 Vt. Acts & Resolves 16; Conn. Gen. Stat. § 36a-469c(a)(3); Utah Admin. Code R337–2–3; Fla. Stat. ch. 655.411(1)(a); and Me. Rev. Stat. Ann. tit. 9–B, 343(1).

[12] Governing conversions of MSBs to stock banks.

[13] 12 CFR part 563b. OTS rules include additional requirements if the conversion involves the creation of a mutual holding company structure. 12 CFR part 575.

[14] ''Rights of dissenting stockholders. A shareholder of a national banking association who votes against the conversion * * * or who has given notice in writing to the bank at or prior to such meeting that he dissents from the plan, shall be entitled to receive in cash the value of the shares held by him, if and when the conversion, merger, or consolidation is consummated * * *.'' 12 U.S.C. 214a(b), incorporated by cross reference into 12 CFR 5.24(f) (the OCC conversion rule).

Determination by the Board of Directors That Conversion Is in the Best Interests of the Members

The directors and officers of a credit union have a fiduciary duty to act in the best interests of the credit union members. The FCUA specifically provides that the Board may take adverse action against institution-affiliated parties, including directors, of a federally-insured credit union, if they have ''committed or engaged in any act, omission, or practice, which constitutes a breach of such party's fiduciary duty * * * [and by reason of such action] * * * the interests of the insured credit union's members have been or could be damaged.'' 12 U.S.C. 1786(g)(1). The NCUA Board itself has previously stated:

> It is well accepted law that officers and directors of depository institutions are held by a strict fiduciary duty to act in the best interest of * * * its shareholders. * * * As an officer of the credit union, Respondent had a duty to act in the institution's best interest and that of its members.[15]

The fiduciary duties directors owe to credit union members are similar to those owed to corporate shareholders because, like shareholders who are the owners of a corporation, members own the credit union.[16] These fiduciary duties include the duty to act loyally, in good faith, with due care and prudence.[17] A director may be held personally liable for a breach of fiduciary duty to the credit union and its members.

The Board believes that credit union directors must faithfully fulfill their fiduciary duties to members by closely examining whether a charter conversion is in the members' best interests. Directors should review all aspects of a conversion to an MSB, including, for example, how the conversion will affect rates and services available to members and how regulatory differences between the two institutions, such as lending restrictions imposed under the qualified thrift lender test, could affect member service. 12 U.S.C. 1467a(m); *see also* OTS Thrift Activities Regulatory Handbook, Section 270 (June 2002). Directors should not limit themselves to information presented by management or by conversion consultants, but should ensure that they have all of the information necessary to make a fully informed decision. In deliberating over a conversion proposal, officials' decisions must be free of self-interest and compliant with their duties of care and loyalty to the members.

Advance Notice of Board Meeting To Consider Conversion Proposal.

The proposal amends § 708a.3 to add a new requirement: The credit union's board of directors must publish public notice indicating its intent to hold a board meeting for purposes of voting on a conversion proposal. Ultimately, the decision to change from a credit union charter to a bank charter rests with the members, and the Board believes the conversion process will better inform the members and enable board members and officers to fulfill their fiduciary duties if members are involved early in the process and have an opportunity to interact with the board of directors before the directors formally commit to a conversion.

The proposed rule requires the board of directors consider, adopt, and publish a notice of its upcoming meeting. The board must publish the notice in a local area newspaper and on the credit union's website, as well as post a notice in the credit union's offices, no later than 30 days before the meeting. The notice will inform members that they may provide comment to the board before it votes to approve the conversion proposal. The board of directors must review the member comments before it votes on the conversion proposal. If the credit union maintains a website, the credit union must also post the comments in a clear and conspicuous fashion.

NCUA believes these proposed amendments will benefit both the members and the board of directors. Advance notice of a pending conversion affords members additional time to educate themselves about the future path of their institution. For those members who want to discuss their views with other members, it gives them additional time to make contact and initiate dialogue. It also gives members an opportunity to discuss the issue with their board before it has committed itself to pursue a conversion.

This advance notice is also beneficial for the board. The credit union's directors have a fiduciary duty to act in the best interests of the credit union's members, and it is reasonable to assume that the members may have some insight into their own best interests. By notifying members of the board's intentions and receiving member comments, the board is better able to understand the desires of its member-owners. Early feedback from the members will also help the board gauge if the membership is likely to vote against a conversion proposal. In some cases, the board may determine that the majority of members will oppose the conversion and, if they will, the board may decide against adopting the conversion proposal and so avoid incurring some considerable expense.

The FCUA links NCUA's rulemaking authority to the rules promulgated by other financial regulators. Accordingly, NCUA notes there is precedent for NCUA's proposal to engage the membership early in the conversion process. In Michigan and Vermont, a state credit union's board of directors must send written notice to each member, without any other mailing, at least 30 days before the board votes on a plan of conversion from a credit union to an MSB. Mich. Comp. Laws 490.373(1)(a) and (1)(i)(ii); 8 Vt. Stat. Ann. Tit. 8, § 35102 (2006). The notice must address why the board is considering conversion, discuss the positive and negative effects of the proposed conversion, and request member comments. *Id.* Members send their comments to the credit union, which later provides copies to the state supervisory authority. Texas also requires a similar notice to members at least 30 days before a credit union board

[15] *In re Majette*, Final Dec. & Order, p. 9 (NCUA Bd., Mar. 18, 1999), copy available at *www.ncua.gov.*

[16] ''The directors of a non-profit membership corporation have a duty to act in the best interest of the corporation's members. * * *'' *Baring* v. *Watergate East, Inc.*, 2004 Del. Ch. Lexis 17. *See also Bourne* v. *Williams*, 633 S.W.2d 469 (Tenn. App. 1981); *Kirtley* v. *McClelland*, 562 N.E. 2d 27 (Ind. Ct. App. 1990). As for the ownership rights of credit union members, ''it seems clear that the members of a credit union are, in the same sense as the shareholders of an ordinary business corporation, the owners of the entity.'' *Anheuser-Busch Employees Credit Union* v. *Federal Deposit Insurance Corporation*, 651 F.Supp. 718, 724 (W.D. Mo. 1986) (comparing rights of corporate shareholder to credit union member). Credit union members exert control over the affairs of the institution through their voting power, not delegable by proxy. 12 U.S.C. 1760. The net worth of the credit union belongs to the members, and they may recognize it in a variety of ways, including low loan rates and high savings rates (See discussion at notes 23–26 and accompanying text), voluntary liquidation (12 CFR part 710), and the special dividends paid by many credit unions. *See, e.g. Loan Growth, Excess Capital Play Huge Role in Dividend Payouts,* Credit Union Times, January 4, 2006, at p. 1. There are several additional aspects of credit union membership that distinguish members from both debtors of the credit union and from bank depositors. For example, by law membership shares in an FCU are equity. 12 U.S.C. 1757(6). Dividends on FCU shares are not a contractual right, as is interest on a bank certificate of deposit, but may only be paid if the FCU has sufficient retained earnings. 12 U.S.C. 1763; NCUA OGC Legal Opinion 96–0917 (January 22, 1997), located at *www.ncua.gov.* And, in the event of a credit union liquidation, unsecured creditors have priority over members to the extent of the members' uninsured shares, 12 CFR 709.5(b)(5), (6), unlike bank depositors who take equally with unsecured creditors to the extent of uninsured deposits. *See, e.g.*, 12 CFR 360.3(a)(6).

[17] 19 C.J.S. Corporations, §§ 477, 478 (1990).

votes on a plan of conversion.[18] These state law provisions impose a greater burden on a credit union in comparison with NCUA's proposal, which requires notice only by publication and not direct notice to each member.[19]

In addition to the publication of notice in newspapers, in credit union offices, and on the credit union's Web site there are other potential vehicles for notifying members of the pending decision to adopt a conversion proposal. For example, many credit unions send information to members in the form of statement stuffers with periodic statements of account. Other credit unions may have an extensive e-mail list for member contact. The Board invites comment on whether the final rule should allow for the use of these communication channels, or others not mentioned, in addition to or in lieu of those communication methods described in the proposed rule text.

708a.4 Disclosures and Communications to Members

Section 708a.4 of the current rule, entitled Voting procedures, provides for a member vote on the conversion at a special meeting or by mail and describes the notices that must be provided to members 90, 60, and 30 days before the vote. It prescribes certain information and disclosures that must be in the notices. It also requires the vote must be by secret ballot and conducted by an independent entity.[20]

The proposal contains several changes to § 708a.4. It provides that the ballot must be sent with the 30-day notice. It modifies the mandatory disclosures the board of directors must give to members once the board has approved a proposal to convert. It establishes procedures for members to share their views with other members during the 90-day notice period before the membership vote. The proposal also retitles the section to reflect its additional purposes and relocates portions of the original § 708a.4 to § 708a.6.

Delivery of the Ballot to the Members.

The FCUA and NCUA's conversion rule require a converting credit union to submit notice of its intent to convert to each member eligible to vote three times before the date set for the membership vote on the proposal. 12 U.S.C. 1785(b)(2)(C); 12 CFR 708a.4. The credit union must submit the notice 90, 60, and 30 days before the vote. *Id.* The member notice must adequately describe the purpose and subject matter of the vote on conversion. 12 CFR 708a.4(c).

The proposed rule's paragraph (a) maintains the statutory three notice requirement but requires a credit union to include conversion mail ballots only with the 30-day notice. This requirement replaces the provision in the current rule that simply requires the ballot be submitted to members no less than 30 calendar days before the vote. 12 CFR 708a.4(b).

NCUA believes this change benefits members because it allows them time to consider the advantages and disadvantages of a conversion proposal before voting. If members receive a ballot with their 90-day or 60-day notice, as permitted by the current rule, they may vote before having the benefit of all the information they may need to make an informed decision. Under the proposal, members who want to share their views with the membership will have time to express their opinions before the credit union includes the mail ballot with the 30-day notice. As discussed below, the proposed rule gives members the opportunity to share their views about a conversion proposal once their credit union's board of directors has approved a proposal to convert. The proposal gives members at least two full months to fully debate whether the credit union should change its charter and provides members an adequate amount of time to consider such a significant decision before casting their votes.

NCUA notes that in several states converting state-chartered credit unions must include mail ballots 30 days before the membership vote on a conversion to a mutual savings bank and may not send ballots earlier than 30 days before the special meeting. Iowa Admin. Code r. 180–3.4(1); Mich. Comp. Laws 490.373(1)(f); N.Y. Banking Law 487–A; and 2005 Vt. Acts & Resolves 16.

Proposed § 708a.4(b)(4) discusses the content of the ballot. The ballot must set forth the proposal that the members are voting on and inform the members clearly and conspicuously that a vote for the proposal means the credit union will become a bank while a vote against the proposal means that the credit union will remain a credit union. The ballot may also indicate whether the board recommends a vote for or against the proposal, but may not contain any other information.

Required Disclosures to Members

Section 202 of CUMAA requires NCUA to: (1) Administer and approve or disapprove the methods by which a member vote on a conversion proposal is taken, and (2) promulgate rules governing charter conversions that implement the statutory directive that credit unions provide notice to their memberships about proposed conversions. 12 U.S.C. 1785(b)(2)(C), (G)(ii). NCUA's conversion rule and the proposed amendments are designed to ensure that a credit union's member-owners have the ability to make an informed choice about their credit union's future. Officials must give members full and fair disclosure regarding any conversion plan.

Full and fair disclosure is important because the FCUA gives credit union members the responsibility for making the final decision regarding the future of their member-owned credit union. Due to the cooperative structure of credit unions, the FCUA and NCUA's implementing regulations afford a significant role to member-owners to participate in major decisions affecting both Federally-chartered and state-chartered credit unions. In addition to MSB conversion votes, credit union members (depending on their chartering statute) may have the right to vote on converting to a different credit union charter, terminating or converting federal share insurance, merging into another credit union, and liquidating the credit union voluntarily. 12 U.S.C. 1771(a), 1786(a)(1); 12 CFR 708b.106(b), 708b.201(c), 710.3(b). Each of these transactions is subject to regulatory requirements imposed by NCUA or SSAs to ensure that members are given adequate notice before the vote is taken. Member notices must convey important information in an impartial manner so the membership can make an informed decision.

Like the termination of Federal share insurance, the conversion to an MSB is a significant transaction that affects

[18] 7 Tex. Admin. Code § 91.1007(b) (Final rule adopted by Texas Credit Union Commission on June 9, 2006).

[19] There are other situations where law and regulation requires some public notice of pending conversions beyond the formal written notice sent directly to members. The OTS requires any entity desiring to organize or reorganize as a federal MSB, including a credit union, to publish public notice of its pending OTS application. 12 CFR 543.2(d) and part 516. The notice informs the public of the application, provides for public inspection rights, and solicits public comment. In Maine, a conversion plan must be presented to members at a special informational meeting in each county where there is a branch office before a meeting is held to vote on a plan, if the state supervisory authority (''SSA'') has not waived the requirements. Me. Rev. Stat. Ann. tit. 9–B, § 344(3). A state savings association that proposes to convert to a bank in New Hampshire must publish public notice in a newspaper having general circulation in each city or town with an office. N.H. Code Admin. R. Ann. Banks 519.04. The notice must indicate the savings association's application and plan are available for public inspection at the bank commissioner's office and that the commissioner will accept written comments from the public. *Id.*

[20] These confidentiality requirements are similar to those imposed by the Farm Credit Administration on the elections of the financial institutions it regulates. 12 CFR 611.330.

various aspects of a member's interests and, therefore, requires full and fair disclosure to the membership. The board of directors will explain to the members why it desires to convert and provide reasons in support of conversion. The required disclosures contained in NCUA's current rule, including the attendant changes in membership ownership interests and voting rights, whether the MSB plans to change from mutual to stock form, conversion benefits that flow to management, and the implications of thrift lending limits, ensure that the information provided by the board is complete and comprehensive.

Paragraphs (b), (c), and (d) of the proposed § 708a.4 maintain the current disclosure requirements, namely, that the notices to members must adequately state the purpose and subject matter of the proposal and inform members that they may vote either in person at the meeting or by submission of a written ballot. To assure that a conversion vote is conducted in a fair and legal manner, all information communicated to members by the credit union must be accurate and not misleading. Under the current rule, in addition to disclosing the purpose, subject matter, date, time, and place of the special meeting, the three notices submitted to members must make certain disclosures relating to members' ownership interests and voting rights, as well as a disclosure regarding any conversion-related economic benefits to officials. NCUA has retained these additional disclosure requirements because members should have notice that their fundamental rights as credit union members will change if the credit union converts to an MSB.

In addition to the disclosures above, the proposed rule requires that the 90-day and 60-day notices state in bold type, in at least 12-point font, that a written ballot will be mailed together with the 30-day notice. The proposal also requires all three notices to disclose the impact of the qualified thrift lender test, established under 12 U.S.C. 1467a(m), on the institution if it converts to an MSB. NCUA believes officials should disclose to members in a manner members can easily understand that, upon conversion to an MSB, an institution's focus may shift from providing a full array of consumer loan products to the more limited financing of mortgages and other qualified thrift investments.

Required Boxed Disclosures

The current § 708a.4(e) requires that each written communication it sends to its members include specific disclosure language about the effects of a conversion. These disclosures include changes in ownership and control, the potential for changes in rates and fees, the possibility and effects of a subsequent stock conversion, and the costs of the conversion. NCUA believes these disclosures are important information that a member must see, read, and consider before the member decides how to vote. The current rule requires that these disclosures be ''boxed,'' that is, that they be offset by a border and are otherwise made more conspicuous than other information provided with the member notices. The disclosures also use plain English and basic concepts to help members comprehend the transaction before they vote on a conversion.

The proposed boxed disclosures retain the current disclosures related to the potential for profits by directors and senior management and the possibility of changes in rates following conversion.[21] A detailed justification for the truth of these particular disclosures and their importance to the members is set forth later in this preamble.

The proposed boxed disclosure also contains a new disclosure that sets forth in plain language the effects of a member voting ''FOR'' a conversion: That the credit union will become a bank. The disclosure states the converse: That a vote ''AGAINST'' the conversion means that the credit union will remain a credit union. Some credit union members may not understand this. Often, these simple but important facts go unrecognized until the conversion has been approved.

NCUA is further concerned that, in past conversions, not all members have seen and read the boxed disclosures required by § 708a.4. Accordingly, the proposal amends the delivery requirements for these important disclosures to ensure that members are aware of these disclosures. Specifically, paragraph 708a.4(c) of the proposal requires that these essential disclosures be delivered on a separate sheet of paper with no other text. The paper must be placed immediately after the credit union's cover letter and before any other information included with the notice. The current rule requires the credit union provide the boxed disclosures with all written communications to members. The proposal, however, provides that these disclosures need only go out to the members with the 90-day, 60-day, and 30-day notices.[22]

The boxed disclosure language and delivery requirements in this proposed rule will increase the likelihood that members will read and comprehend these important disclosures. A discussion of the particular boxed disclosures and disclosures required elsewhere in the member notices follows.

Required Boxed Disclosure: Loan and Savings Rates

Credit union members can make an informed decision about a proposed MSB conversion only if they understand, among many other things, that the conversion may result in their paying higher loan rates and receiving lower savings rates post-conversion than pre-conversion. Accordingly, the proposal retains NCUA's disclosure language that, after conversion, a member may experience adverse changes in rates.

NCUA engaged the services of Datatrac Corporation for purposes of gathering and analyzing data on historic loan and savings rates. Datatrac is a market research, information technology company specializing in the financial services industry. It has been an independent source of deposit and lending product information for more than 15 years, advertising that it manages the most comprehensive database of deposit and lending data in the industry.[23]

[21] The proposed letter does not contain specific disclosure language about changes in ownership rights or the costs of conversion. The proposed rule still requires the credit union to disclose this information as part of the credit union's member notice. The proposed rule also does not include language that informs members that, due to field of membership restrictions, members may not be eligible to join another credit union if the conversion succeeds. This language is true but, because some credit unions may have community-based fields of membership, the possibility of obtaining membership in another credit union depends largely on where a member lives.

[22] Previously, some converting credit unions were not sure what communications constituted member communications, and the proposal eliminates this issue. Although the proposal contains no specific disclosures for member communications outside the member notices, those communications still must be accurate and not misleading. *See* 12 CFR 740.1 and proposed § 708a.8(a).

[23] Datatrac information and a link to the Datatrac Web site are available online at the Web site of the American Bankers Association (ABA). The ABA and Datatrac have partnered together to bring Datatrac resources to ABA members and users of ABA's Web site. Additionally, the following information can be found on the ABA's Web site:

Datatrac is the exclusive provider of deposit & loan interest rate data to the American Bankers Association (ABA), Credit Union National Association (CUNA), National Association of Federal Credit Unions (NAFCU), Bank Administration Institute (BAI) and Financial Managers Society (FMS). Datatrac's rate information has been quoted in newspapers, television and Web sites nationwide, including USA Today, CBS MarketWatch, Consumers Digest, Kiplinger's Personal Finance, the American Banker, the Chicago Tribune, the Los Angeles Times and the Milwaukee Journal Sentinel. Since 1988 the

NCUA asked Datatrac to provide data on over 20 distinct loan and savings products offered by thousands of banks and credit unions. These products included automobile loans; fixed and variable rate mortgage products; credit cards; and savings products, such as short and long term CDs and savings, checking, and money market accounts. Datatrac broke each of these products down into average rates for all institutions over several years, including rates as of year-end for 2002 through 2005.

The Datatrac data was clear: The historic consumer loan and savings rates offered by credit unions are better for members than those same rates offered by banks of all types, including, specifically, MSBs.[24] This table illustrates the difference for two particular products (60-month certificates of deposit (CD) and 60-month new-auto loans) at year-end of 2005:

Product	Average CU rate	Average MSB rate	CU rate advantage[25]
60-Month CD	4.58	4.20	9% greater.
60-Month New Auto Loan	5.57	7.04	21% less.

Recently, researchers at Fiscal and Economic Research Center at the University of Wisconsin—Whitewater also examined the differences in loan and savings rates between credit unions and banks. J. Heinrich and R. Kashian, *Credit Union to Mutual Conversion: Do Rates Diverge?,* February 22, 2006 (hereinafter Heinrich). The Heinrich study considered loans and savings rate data from 175 large credit unions and banks, including some banks that had converted from credit unions. The study's findings were consistent with NCUA's analysis of its Datatrac data, including, specifically, that ''[c]redit unions offer significantly higher interest rates on all savings products examined and charge lower interest rates on three of four loans products compared to converted credit unions after accounting for all other variables.'' [26] The other variables accounted for included salary payment differences, size differences (economies of scale), and differences in market concentration. Id. at 3.

This information supports NCUA's belief that credit union members must be made aware that a conversion to an MSB may result in less advantageous rates. Informed credit union members may still decide to vote in favor of conversion in light of this information. NCUA's obligation under the FCUA is to provide regulations that ensure that members cast informed votes and, accordingly, the proposed disclosure reads as follows:

RATES ON LOANS AND SAVINGS. If your credit union converts to a bank, you may experience adverse changes in your loan and savings rates. Available historic data indicates that, for most loan products, credit unions on average charge lower rates than banks. For most savings products, credit unions on average pay higher rates than banks.

NCUA specifically invites comments on how rates, fees, and service levels may have changed in particular credit unions that have converted to banks. NCUA also invites comments on NCUA's proposed disclosure language.

Proposed Boxed Disclosure: Benefits to Directors and Senior Management

NCUA is concerned that the directors and officers of a credit union considering conversion to an MSB may be motivated by the potential for personal financial gain and not by concerns for the best interests of credit union members. Most of the benefit for directors and officers occurs when the MSB converts to a stock bank within a few years after the conversion to an MSB. Accordingly, the boxed disclosures currently required by § 708a.4 include the following:

SUBSEQUENT CONVERSION TO STOCK INSTITUTION. Conversion to a mutual savings bank is often the first step in a two-step process to convert to a stock-issuing bank or holding company. In a typical conversion to the stock form of ownership, the EXECUTIVES OF THE INSTITUTION PROFIT BY OBTAINING STOCK FAR IN EXCESS OF THAT AVAILABLE TO THE INSTITUTION'S MEMBERS.

NCUA is aware that some do not agree that the credit union's directors and officers benefit as a result of a credit union to MSB to stock conversion process and have challenged NCUA's required disclosure language as being potentially misleading.[27] In response, NCUA has examined this issue in greater depth. As discussed below, the evidence available to NCUA indicates that directors and officers do, in fact, profit from a conversion, in part by obtaining stock in excess of that available to the members. A discussion of this conversion process and the benefits that accrue to directors and officers at the institution follows.

Twenty-nine credit unions have converted or merged into an MSB since 1995. Twenty-one of these 29 have since become a stock bank or merged into an existing stock institution.[28] Some

company has combined technology, research and strategic services to enable financial institutions to make timely, competitive pricing and marketing decisions. With over 5 million retail deposit and lending interest rates and products updated annually for over 14,000 financial institutions, Datatrac manages the most comprehensive financial products database in the industry. For more information, please visit *http://www.datatrac.net/*.

[24] In automobile lending and in long term savings, the credit union rates were far superior to bank rates. For two of the twenty products examined, mortgage lending and passbook savings, bank and credit union rates were almost identical, but there was no product of the twenty examined where banks rates were clearly better than credit unions rates. This data is average data; and rates will vary by particular financial institution and particular product. NCUA believes that average data over thousands of institutions is more reliable than individual institutional data because average data removes the effects of short-term promotional rates. Additional information about this data is available on NCUA's Web site at *http://www.ncua.gov*.

[25] Determined by dividing the CU rate by the MSB rate.

[26] *Heinrich* at 1.

[27] For example, in a letter to Representative Spencer Bachus, dated June 15, 2005, Ms. Casey-Landry, the President of the America's Community Bankers, wrote: ''The NCUA also is ill-informed regarding stock subscription rights when a mutual institution converts to stock form. The NCUA suggests that credit union managers use charter conversions as a way to get rich at the expense of account holders. * * * This erroneous belief is also reflected in the disclosure language the NCUA requires to be given to all members of a converting credit union.'' In June 2005, Mr. Riccobono, then the acting OTS Director, also signed an order stating that NCUA's required disclosures about access to stock by directors and officers were ''potentially misleading.'' OTS Order 2005–23, June 29, 2005. Mr. Riccobono stated, in part, that ''[OTS] regulations strictly limit the amount of stock any executive may purchase in a conversion. * * * In addition, executives cannot purchase any more stock in the conversion than any other member.'' Neither Ms. Casey-Landry nor Mr. Riccobonno address director and officer access to stock in the case of an oversubscription to the initial public offering; nor do they mention the millions of dollars in free stock that the directors and officers—but not rank-and-file members—can and do receive following conversion through stock benefit plans. This is discussed further, *infra*.

[28] Some of these stock conversions have been full stock, that is, 100% of the stock is publicly held.

Continued

recently converted MSBs have indicated an intent to convert to a stock bank, but the OTS requires these new MSBs to wait at least a year before applying with the OTS to convert to a stock banks.[29] In some cases, credit unions that converted to MSBs waited multiple years before completing a stock conversion.[30] Accordingly, to understand the likelihood of a credit union ultimately becoming a stock bank one must look to older MSB conversions. There were 24 credit union to MSB conversions that occurred from 1995 through the end of 2003, and 21 of those 24 converted credit unions, or about 87%, ultimately assumed a stock charter. These statistics suggest members of a credit union converting to an MSB should anticipate a follow-on conversion to a stock charter at some point in the future.

The information collected by NCUA suggests that a mutual to stock conversion permits directors and officers to obtain significant financial benefits from the conversion, in part through the acquisition and control of stock. The ownership of the stock gives the directors and officers ownership of a portion of the net worth of the institution, and control of the stock voting rights also allows directors and officers to increase their compensation more easily. The directors and officers obtain ownership and control of stock in several different ways. While other members of the converting MSB have access to stock, none of them have nearly the access that the directors and officers do.

Directors and officers acquire significant amounts of stock through management stock benefit plans and stock option plans, and (for the officers but not the directors) employee stock ownership plans. In fact, the rules governing federal mutual savings bank to stock conversions were specifically crafted to ''enhance the ability of officers, directors and employees of an institution to acquire stock when their institution converts, through various types of employee stock benefit vehicles * * * [so as to] * * * provide a means for officials and employees of converting institutions to acquire larger ownership stakes in their institutions upon conversion * * *''[31] A summary of these stock plans follows.

The converting bank may establish an Employee Stock Ownership Plan (ESOP).[32] The ESOP may participate directly in the initial stock subscription and may hold up to 10% of the total conversion stock offering.[33] The bank funds ESOP purchases and so ESOP stock costs the employee beneficiaries nothing. Members of the credit union who become depositors of the subsequent bank and who are not employees cannot participate in the ESOP.

Shortly after a stock conversion, a converted bank may establish two additional stock benefit plans for its directors and officers: A management stock benefit plan and a stock option plan.[34] The management stock plan holds stock for the benefit of managers and directors and may own and hold up to 4% of the outstanding stock.[35] Again, the bank funds the management stock benefit plan so the stock costs the managers and directors nothing.[36] A stock option plan permits the bank to grant employees options to purchase stock and a stock option plan may hold up to 10% of the outstanding stock issued in a conversion.[37] Members of the credit union who become depositors at the subsequent bank and who are not officers or directors cannot participate in the management stock benefit plan or stock option plan.

In addition to the various stock plans available to officers and directors, the officers and directors may also purchase between 25% and 35%, in the aggregate, of the initial public offering (''IPO'') of stock.[38] The converting institution typically sets the purchase price of each share of stock at ten dollars. On the day of the IPO, however, the value of this stock is likely to increase markedly over its purchase price, in some cases as much as seventy percent. This increase, known in the trade as the ''IPO pop,'' is pure profit to those who subscribe to and participate in the IPO.[39] This pop represents part of the transfer of the value of the institution from its members as a whole to those individuals who subscribe to the IPO.

While all depositors (as of a certain date) of the converting institution technically have equal subscription IPO rights, if the IPO is oversubscribed, meaning there are more requests for stock than the amount of stock being offered, then the depositors with larger account balances will be able to buy more stock than those depositors with small account balances. The institution's directors and officers know in advance the date of record for subscription rights, and so may increase their account balances at an appropriate time to ensure maximum subscription

Others have been conversions into mutual holding company (MHC) form, where 49% of the stock is publicly held and the other 51% is held by an MHC. Whether an MSB converts to full stock or MHC, the directors and officers have access to stock that other members do not. The Board notes that the MHC structure was first introduced during the demutualization of the insurance industry in the 1990s. For a discussion of some of the issues particular to an MHC conversion, including the diminution of member-owner rights, see *Note: No Longer Your Piece of the Rock: The Silent Reorganization of Mutual Life Insurance Firms,* 73 N.Y.U.L. Rev. 999 (1998).

[29] ''Credit unions are not authorized to convert directly to a Federal stock savings institution. A credit union may convert to a Federal stock savings institution subsequent to its conversion to a Federal mutual savings institution, pursuant to 12 CFR part 563b. OTS will generally require the converted credit union to operate as a Federal mutual savings institution for at least one year before entertaining an application to convert to the stock form of organization.'' OTS Applications Processing Handbook, Section 430.1 (February 5, 2002).

[30] For example, Beacon Federal took over four years to convert from an MSB to a stock bank (July of 1999 to January of 2004) and Atlantic Coast Federal took over two years to convert from an MSB to a stock bank (November of 2000 to January of 2003).

[31] 51 FR 40127 (November 5, 1986) (Preamble to final Federal Home Loan Bank Board rule on federal mutual savings bank stock conversions).

[32] 12 CFR 563b.380. The ESOP is voted on and approved by the MSB members as part of the extensive materials constituting the plan of conversion. The existence and details of the ESOP are not placed conspicuously or highlighted for thrift members in the same manner that NCUA requires for the disclosures to credit union members under this rule.

[33] In practice, rules limiting the aggregate amount of stock held by both management stock plans and the ESOP may limit the ESOP to 8% of the total conversion stock offering.

[34] 12 CFR 563b.500(a). These plans are voted on and approved by the bank stockholders. At the time of this vote, the directors and officers generally control a large percentage of the votes through stock acquired by them in the initial public offering (IPO) or held for their benefit in the ESOP.

[35] 12 CFR 563b.500(a)(3). The management benefit plan is restricted to 3% of the stock if the converting institution has less than ten percent capital, which would be rare for converting MSBs that were former credit unions. Also, the aggregate amount of stock in the management stock benefit plan and the ESOP cannot exceed 12%.

[36] According to one press report, this management stock benefit plan is perhaps the most lucrative of the various stock acquisition options and often means millions of dollars in free stock for only a handful of senior executives. Credit Union Journal, February 24, 2004. The report, quoting an official from SNL Financial, states that ''[i]n some cases that can increase compensation by 10 to 20 times.'' *Id.*

[37] 12 CFR 563b.500(a)(2). Stock options may not be granted at less than the market price at time of grant. *Id.* at (a)(9). Also, there are restrictions on how the benefits in these plans may be divided between the officers and directors. No individual may receive more than 25% of the stock in any plan, and directors are limited to 5% (individually) and 30% (as a group) of the stock in any plan. 12 CFR 563b.500(a)(5) and (a)(6).

[38] 12 CFR 563b.375. This aggregate limit increases from 25% to 35% on a sliding scale as the size of the institution declines meaning the smaller the institution the more the officers and directors may buy. Any individual officer or director may purchase up to a limit established by the thrift, but generally no more than 5%. The OTS may approve a higher limit. 12 CFR 563b.385.

[39] The stock of Rainier Pacific Financial Group, formerly the Rainier Pacific Credit Union, popped 69.9% on the day of its IPO. IPO pops vary, but investors can generally expect a pop well into the double digits. For a list of some historical IPO pops, see SNL Conversion Watch, Sept. 1, 2005, P. 4.

rights.[40] Other depositors who are not directors or officers will not have this information. There is also anecdotal evidence suggesting many depositors of a converting institution do not exercise the IPO rights they have, either because they are not well informed about the value of the stock subscription or because they do not have the resources to purchase the stock and take advantage of the IPO pop.[41] The depositors' failure to exercise their IPO rights also benefits the directors and officers.

This stock conversion structure permits the directors, officers, and employees of the bank and the benefit plans created for those persons to obtain a substantial portion of the shares and the associated net worth of the institution. Consultants who advise credit unions to pursue conversions make specific claims about the magnitude and extent of the financial benefits available to the directors and officers at converting credit unions. One newsletter article prepared by such a consultant states that:

- Bank CEOs typically receive much greater compensation than credit union CEOs, with the bank CEOs receiving from 20% to 57% more for institutions of similar assets size.[42]
- Bank directors typically earn between $2,500 to over $50,000 annually, in addition to travel and expense allowances, while credit union directors are typically uncompensated.[43]
- The gap in pay can be much wider at individual banking institutions that utilize stock compensation programs. For example, assuming a credit union with $50 million in capital converts to a stock bank with an IPO amount of $100 million, directors would share a $2 million grant of stock, and management would receive an equal grant. Each member of a five director board would get $400,000 in stock, vested over five years, at the IPO value.[44]

This article continues by detailing various other opportunities for a credit union-turned-bank executive to accrue wealth, and concludes with ''[t]he reward for performance could lead to a $10 million plus, ownership stake for a capable CEO. * * * If the conversion is not made during the current tenure, the next CEO in charge may very well realize the value.'' [45]

The financial trade press has reported on the specific benefits that directors and officers of credit unions obtain from their access to stock following a mutual to stock conversion. In one converted credit union, the officers and directors set aside $5 million in free stock for themselves through stock benefit plans [46] and made several million more dollars in profits on the IPO pop.[47] At another converted credit union, the officers and directors amassed more than $14 million in stock and cash benefits during the three-year period following stock conversion, with the CEO alone receiving $3 million in stock.[48] At another converted credit union, the officers and directors made approximately $1 million in profits on the IPO pop and set aside another $3.5 million for themselves in free stock.[49] At another converted credit union, the CEO made $600,000 on the IPO, received rights to another $1 million in free stock, and received additional stock option benefits.[50]

NCUA has analyzed publicly available financial documents at the Securities and Exchange Commission related to these press reports and believes the numbers above are generally accurate.[51]

In sum, the NCUA believes there is ample evidence to support its conclusion, as set forth in the currently required boxed disclosures, that ''[i]n a typical conversion to the stock form of ownership, the executives of the institution profit by obtaining stock far in excess of that available to the institution's members.'' NCUA also believes that banking regulations are structured to facilitate stock ownership by directors and officers. Credit union members have a right to know this before they vote on an MSB conversion. Accordingly, NCUA's proposed boxed disclosure retains language about profits by directors and officers. NCUA modified the proposed language slightly to make it less subjective and easier to understand. The proposed disclosure language reads as follows:

POTENTIAL PROFITS BY OFFICERS AND DIRECTORS. Conversion to a mutual savings bank is often the first step in a two-step

[40] While the OTS restricts the ability of directors and officers to increase account balances and, thus, subscription rights within the year before the date of record, 12 CFR 563b.360, these individuals may act to increase their account balances just before this one year period. NCUA is aware that some credit union boards hire consultants and begin deliberations on potential conversion to an MSB and then a stock bank multiple years before they adopt a formal proposal to convert to an MSB.

[41] See Mario F. Cattabiani, Jennifer Lin & Craig R. McCoy, *A Fast-moving and Enriching Merger; Fumo's Bank Aimed to Merge Quickly with a Former Credit Union, But Ran Into Regulatory Yellow Lights,* THE PHILADELPHIA INQUIRER, May 16, 2005, at A1. This article discusses the conversion of IGA FCU into an MSB and ultimately into a stock bank. The article notes that, although executives of the former credit union stated the 1999 stock conversion was intended to benefit the working class individuals who built the credit union, less than five percent of the former credit union members actually bought any stock. *See also, Documents Show Insider Dealing Started Early At CU-Turned-Bank,* Credit Union Journal, May 23, 2005. NCUA is not aware of any regulatory requirements that an MSB converting to stock form inform its members about the possibility of this IPO pop.

[42] Theriault, Alan D., *CEO & Directors: Salary Imbalance is Corrected by Converting to a Bank,* CONVERTING FROM A CREDIT UNION FAX UPDATE, Sept. 16, 2002, available at *http://www.cufinancial.com/pdfs/NL2002.pdf.*

[43] *Id.*

[44] *Id.*

[45] *Id.* at 2–3.

[46] ''On Feb. 17, directors of [Rainier Pacific Financial Group, the parent of Rainier Pacific Savings Bank], known until 2000 as Rainier Pacific CU, approved a lucrative post-conversion compensation for both themselves and managers. Under the plan, disclosed in documents filed with the Securities and Exchange Commission, top executives and directors of Rainier Pacific will be granted a total of 288,500 shares of stock valued at almost $5 million, to be vested over the next five years. The largest recipients will be [the President and CEO], who will receive 60,000 shares valued at almost $1 million, and [the Senior Vice President], who will receive 40,000 shares valued at more than $650,000. But directors also voted themselves a share in the so-called management recognition stock plan, with each of the eight non-employee directors in line for 10,000 shares valued at $165,000 over the next five years. That's on top of the $13,750 each of the once-volunteer directors now earn each year to serve on the board. But that's not all. The group, as well as other employees will share in a pool of options to buy 680,000 bank shares at a discount over the next five years. Officials of Rainier Pacific did not return phone calls last week to comment.'' *Taking It to the Bank; Filings Show How CEOs, Boards at Converts Have Cashed In,* Credit Union Journal, March 29, 2004, p. 1. *Hereinafter, Taking It to the Bank.*

[47] *See* the Credit Union Journal Daily, October 22, 2003, located at *www.cujournal.com* (discussing the conversion of Rainier Pacific Credit Union).

[48] See *Excessive Compensation Charged at Convert CU,* Credit Union Journal Daily, February 6, 2006 (Discussing SEC proxy filings involving the converted Synergy Federal Credit Union).

[49] ''The biggest winners at Kaiser [Federal Credit Union] were [the CEO] who bought the maximum allowable 30,000 shares, netting her $108,000 in IPO profits. Four directors and two other top execs also subscribed to the maximum 30,000 allotment. In all, the four top managers and six non-management directors earned $918,000 of profits on their 265,000 shares in last week's IPO. The ex-CU has also set aside another 255,000 shares, worth $3.5 million, as free stock grants to be awarded to the same individuals over the next five years.'' Credit Union Journal, April 5, 2004, p. 1.

[50] See *Taking It to the Bank, supra,* note 23 (Discussing the conversion of Pacific Trust Credit Union), and the Credit Union Journal, February 25, 2004. Four years after the IPO, the CEO had received stock grants and stock options of a total value of about $3.8 million. Credit Union Journal, April 14, 2006.

[51] The press report numbers are rounded. Also, some of the cited stock benefits are subject to vesting requirements or holding periods prior to resale. For example, stock awarded as part of a management or employee stock benefit plan may not vest more rapidly than 20 percent a year. 12 CFR 563b.500(a)(11). In addition, officers, directors, and their associates who make direct purchases of stock during the conversion must hold the shares for at least one year before resale. 12 CFR 563b.505(a).

process to convert to a stock-issuing bank or holding company structure. In such a scenario, the officers and directors of the institution often profit by obtaining stock in excess of that available to other members.

The NCUA specifically invites comments on the changes in compensation for directors and management that have occurred in credit unions that have converted to banks and also the form of NCUA's proposed disclosure.

Disclosures: Member Voting Rights

The proposed rule retains the current requirement that converting credit unions explain to members how the conversion from a credit union to a mutual savings bank will affect members' voting rights and if the mutual savings bank intends to base voting rights on account balances.[52]

Voting rights in credit unions and MSBs are different in two important ways: how many votes each member gets and the use of proxy voting. Federal credit union members have the purest form of democratic government: One-person, one-vote. Federal MSBs are allowed to dilute this through voting based on account balances so that depositors with larger account balances may obtain up to 1000 votes while members with smaller balances may only have one vote.[53] That means that members of lesser means lose voting power in a conversion from credit union to MSB. Directors and officers and other members of greater means gain increased voting power.

The NCUA has seen converting credit unions put statistical information in their member notices that imply the difference between one vote and one thousand votes is meaningless. NCUA believes that no vote is meaningless under any circumstances. In certain situations, the ability to cast one thousand votes instead of only one vote can carry huge weight. For example, in elections with low voter turnout or in very close elections the person with the greater voting power can control the outcome of the election.[54]

Federal MSBs are also permitted voting by proxy. 12 CFR 569. At some point in time, usually account opening, MSB depositors may sign a proxy statement that gives their voting rights to the MSB's board of directors. Typically, these proxies are perpetual or ''running,'' meaning that, except on a vote to convert to a stock charter, the MSB's board of directors, or a committee appointed by the board, will vote the proxy shares indefinitely unless the depositor takes some affirmative action to revoke the proxy.[55] This isolates the MSB depositor from the oversight of the MSB; MSB directors can even elect themselves indefinitely through the use of perpetual proxies.

An OTS Deputy Chief Counsel has characterized the effect of perpetual proxies at MSBs as follows:

> An important custom that perpetuates management control is the use of perpetual proxies that accountholders typically grant to management at the time they open a savings account. The OTS regulations permit a mutual institution's management to solicit proxies that are of unlimited duration. The use of these proxies, coupled with the management's control over meetings of a mutual savings institution, attenuates the influence that depositors may have.

D. Smith and J. Underwood, Memorandum: Mutual Savings Associations and Conversion to Stock Form, p. 17 (Office of Thrift Supervision, Business Transactions Division, May 1997).[56]

In contrast, the FCUA specifically prohibits proxy voting. 12 U.S.C. 1760. FCU members exercise their voting rights directly on all issues requiring a member vote, including the election of directors and fundamental organizational changes.

Disclosures: Regulations Applicable to Other Financial Institutions

Other financial regulators impose disclosure requirements upon charter conversions. State-chartered institutions in Hawaii must state the purpose of the meeting, describe the transaction and include a copy of the conversion plan. Haw. Rev. Stat. 412:3–605(a). In both Iowa and Texas, if a credit union's conversion will ultimately lead to the credit union becoming a stock institution, the board must fully and accurately disclose its intention. Iowa Admin. Code r. 180–3.2(533); 7 Tex. Admin. Code 91.1004(d)(1). Iowa also requires a state-chartered credit union proposing to convert to an FCU to make particular disclosures if the true purpose of the conversion is to convert to an MSB. Under the Iowa regulation, a credit union must disclose: Any loss of ownership interest in the credit union; that voting rights under a mutual savings bank structure are usually one vote per $100; and, that, if the MSB converts to stock, depositors will lose ownership interests and voting rights. Iowa Admin. Code r. 180–3.4(6). Three SSAs require that credit unions provide notice in boldface type to members when converting from a state to Federal credit union charter that the issue will be decided by a majority of the members who vote. Iowa Admin. Code r. 180–3.4(2); Tenn. Code Ann. 45–4–1902; 7 Tex. Admin. Code 91.1004(d)(3).

The OTS also has rules concerning disclosures in connection with depositor votes. It requires the financial institutions it regulates to provide accurate and non-misleading information in connection with depositor voting on matters relating to conversion. OTS also prohibits the use of proxy statement materials that contain any statement that, under the circumstances:

> Is false or misleading with respect to any material fact * * * Omits any material fact that is necessary to make the statements not false or misleading * * * or * * * Omits any material fact that is necessary to correct a statement in an earlier communication that has become false or misleading.

12 CFR 563b.285.

Member Communications With Other Members.

Proposed 708a.4(f) establishes a process for a member to communicate directly with other members after a board has approved an MSB conversion proposal to share information and views about the proposal. The rule permits members to submit written requests to the credit union requesting dissemination of information to other

[52] The proposed boxed disclosures no longer include a discussion of change in voting rights, but a converting credit union must address these changes elsewhere in the member notice as required by the proposed 708a.4(c)(2).

[53] An FMSB may adopt a range of voting rights, from one-person one-vote to one vote per $100 account balance up to 1000 votes. NCUA believes, however, that all credit unions that have converted to FMSBs to-date have adopted bylaws allowing one vote per $100 account balance up to 1000 votes.

[54] For example, one credit union that recently went through the MSB conversion process reported to NCUA that, typically, fewer that one hundred of its members had participated in past elections. NCUA determined, based on call report data, that the *average* account balance at that credit union post-conversion would be about $8,200, and so the average MSB depositor would have about 82 votes. Some depositors, of course, would have balances in excess of $100,000, and so would have 1000 votes. Accordingly, in future elections, if the MSB continues to have about one hundred depositors vote in its annual election of directors, including its 13 incumbent directors, and the incumbents each have the maximum of 1000 votes, the incumbents could reelect themselves even if all the other 87 depositor-voters (assuming average account balances) opposed the reelection. This example does not take into account the incumbent board's ability to exercise proxies on behalf of other depositors, which further amplifies control by the board and management.

[55] ''In practice, members delegate voting rights and the operation of federal mutual savings associations through the granting of proxies typically given to the board of directors (trustees) or a committee appointed by a majority of the board.'' OTS Thrift Activities Regulatory Handbook, Section 110.2 (Dec. 2003).

[56] Available at *http://www.ots.treas.gov.*

members at the expense of the requestor.

The proposal requires a credit union, at the member's request, to send a communication by mail. The proposal also requires a credit union, at the member's request, to send the communication by e-mail to those members who have agreed to accept communications electronically from the credit union.[57] This is an effective method for a requestor to reach some members quickly and affordably. The proposal also requires a credit union to provide members an opportunity to post their opinions on a credit union's Web site free-of-charge if the credit union itself posts conversion-related materials. If the credit union's resources are used to promote a conversion, members should have an opportunity to express their views as well, whether for or against the conversion, in a similar format so that the issue may be openly debated before the membership vote.

Once a credit union sends the 90-day notice, the conversion process will move rapidly toward completion of the member vote. To ensure that member-to-member communications can be delivered in a timely fashion, and, in particular, before members receive the ballot with the 30-day notice, the proposal requires that any member desiring to communicate with other members deliver the communication to the credit union within 35 days (five weeks) after the date of the 90-day notice. A credit union then will have seven days to deliver the communication to its membership or, in the case of a dispute, to NCUA.

The member must agree to reimburse the credit union for the reasonable costs of delivering the communication to other members. The proposal requires a requesting member to provide a credit union with an advance payment toward the reimbursable costs. This advance payment serves two functions. First, it will screen out requestors who may not have the resources or the intent to reimburse the credit union for its costs of delivery. Second, it will streamline the member-to-member communication process and avoid unnecessary delay. A credit union that receives the advance payment must deliver the communication first and work out any details concerning reimbursement of actual costs after delivery.

The amount of the advance payment depends on how the requestor wants the communication delivered. For deliveries by regular mail, the payment will be fifty cents times the number of eligible voters. For deliveries by e-mail the payment will be two hundred dollars regardless of the number of recipients. NCUA invites comment on whether these advance payment amounts are reasonable or whether they should be adjusted.

A member that requests to communicate with other members will need to know the total number of credit union members eligible to vote on the proposed conversion so that the requestor can calculate the amount of the advance payment (for delivery by regular mail). The requestor will also need to know how many credit union members have agreed to receive electronic communications so that the requestor can decide about sending the communication to those members alone. The proposed § 708a.4(b)(3) requires that the 90-day and 60-day notices include the number of credit union members eligible to vote on the conversion proposal and how many members have agreed to accept communications from the credit union in electronic form.[58]

The proposed member communication must be conversion-related and proper. Improper communications include communications that are impracticable to deliver, relate to personal gain or grievance, or are otherwise false or misleading with respect to any material fact.

NCUA is concerned that a credit union and a requesting member may not be able to agree on whether a particular communication is proper and, accordingly, the proposed rule contains a procedure for resolving disputes. If a credit union believes that a particular communication is not proper, it must forward that communication to the Regional Director within seven days of receipt. The credit union must include with its transmittal letter a statement as to why it believes the communication is not proper and a recommendation for modifying the communication, if possible, to make it proper. The Regional Director will review the communication and respond to the credit union within seven days with a determination on the propriety of the communication. If necessary, the Regional Director will coordinate with the requesting member. After completion of the Regional Director's review, the credit union must mail or e-mail the material to the members if directed by the Regional Director.

NCUA intends this timeline to allow members sufficient time to prepare their desired communications, provide them to the credit union, obtain resolution of any disputes, and have the communications delivered before the 30-day notice and the ballot. Specifically, in the most time-sensitive situation, a member will wait the full 35 days after the 90-day notice to deliver a communication to the credit union, the credit union will challenge it as improper and deliver it to NCUA a full seven days after that, and NCUA will then return the communication to the credit union to with instructions to deliver the communication, with any necessary modifications, seven days after that. This still leaves the credit union with at least eleven days to deliver the member communication to other members before delivery of the 30-day notice. If a credit union cannot forward a member communication to other members for receipt before the date they receive the 30-day notice and associated ballot, the proposed rule requires the credit union to postpone mailing the 30-day notice until members receive the communication. If a credit union postpones the mailing of the 30-day notice, it must also postpone the special meeting by the same number of days.

Member Communications: Regulations Affecting Other Financial Institutions

Generally, in a conversion from an MSB to the stock form of ownership, both the MSB and its depositors may engage in proxy solicitations for the meeting to vote on the plan of conversion. In that context, OTS requires the MSB to mail a depositor's proxy solicitation under conditions similar to those in § 708a.4(f) of the proposed rule. OTS also regulates how quickly the mailing must occur and the information that may be in the proxy solicitation. 12 CFR 563b.280, 563b.285.

OTS regulations also establish general procedures for communication between depositors of an FMSB that are independent of the conversion context. 12 CFR 544.8. For example, OTS requires an FMSB to forward depositor communications to other depositors if the requesting depositor agrees to defray the costs and the communication is not

[57] NCUA is not certain how difficult it may be for a credit union to take its member e-mail list and separate the eligible voters from others who may not be eligible to vote. Accordingly, the credit union may, at its option, send the e-mail to all members who have agreed to accept communications electronically or just to those members eligible to vote.

[58] NCUA will also use this information for another purpose. In at least one previous conversion to an MSB, it was not clear if the credit union had correctly identified all eligible voters and given them their opportunity to vote. NCUA will compare the number of eligible voters set forth in the 90-day notice with the number of members the credit union has identified in past call reports to ensure that the count is accurate and that every member eligible to vote on the conversion proposal is provided the opportunity to do so.

''improper.'' The NCUA Board has patterned parts of its proposed § 708a.4(f) after § 544.8 of the OTS rule, including the scope of an improper communication.

NCUA solicits comments on this proposed method of member-to-member communication. NCUA specifically requests comment on whether NCUA should apply this method to all member communications, not just those communications made in the context of a pending conversion to an MSB. In that regard, commenters should be aware that while NCUA regulations and FCU bylaws do not currently address member-to-member communications, if the state corporation law where the FCU is located requires that a corporation facilitate shareholder-to-shareholder communications, the FCU would be bound to follow such a requirement for their member communications. See the discussion of proposed § 708a.12 in the Section-by-Section Analysis below.

Member Communications: Alternative Approaches

NCUA also solicits comment on whether there may be other, better alternatives for facilitating communication among members than the procedure outlined in proposed § 708a.4(f).

For example, in addition to the procedures outlined in proposed § 708a.4(f), should members also be allowed to request that a communication be sent electronically to those members who have agreed to receive communications electronically and have the communication sent by regular mail to those members who are eligible to vote that have not agreed to accept communications electronically? The Board seeks additional information on the difficulties faced by a credit union to organize this multiple-method communication under the timelines prescribed for delivering the member communications.

Another alternative might be to permit members to ask the converting credit union to send other members the requestor's contact information only. That is, the converting institution would mail to its members the name and contact information (e.g., website or e-mail address) of requesting members, along with a statement that the requestor wishes to discuss the conversion and an indication whether the requestor generally supports, opposes, or is neutral on the conversion. A second alternative would be to require members desiring to make substantive statements to other members to prepare the mailing materials themselves, including packaging and sealing the envelopes and affixing the requisite postage. The converting credit union would then simply attach the address labels and mail the materials. Both of these alternatives have the potential advantage that they would not require a determination as to the accuracy of substantive communications made by the requesting member. A third alternative would be not to have a special procedure but to defer to general state corporate law for member access to membership mailing lists, as recognized in the proposed § 708a.12. NCUA also solicits comment on whether any of these alternative approaches, alone or in combination, are better for facilitating member contact than the procedures outlined in proposed § 708a.4(f). NCUA also solicits comment on any other alternatives not mentioned here.

Electronic Voting

The current rule requires converting credit unions to accept ballots either by mail or in-person. NCUA is considering amending the rule to permit credit unions, if they wish, to accept member ballots electronically. NCUA solicits comment on this option.

708a.5 Notice to NCUA

The current § 708a.5 requires that converting credit unions notify NCUA of the intent to convert within 90 days of the member vote. The credit union must provide NCUA with copies of the notice and material it has or will send to the members. State-chartered credit unions must provide NCUA with certain information about the laws and regulations it intends to follow with regard to the conversion. The current § 708a.5 also permits a credit union, if it chooses, to provide notice to NCUA more than 90 days before the member vote, and to request a preliminary determination as to the proposed methods and procedures of the conversion.

Certification Requirement

The proposal amends § 708a.5 to require a board of directors to submit to NCUA a certification of its support for the conversion proposal and plan. Each director who votes in favor of the conversion proposal must sign the certification.

The certification must include a statement that each director signing the certification supports the proposed conversion and believes that the proposed conversion is in the best interests of the members of the credit union. It must include a description of all materials submitted to the Regional Director with the certification and a statement that these materials are true, correct, current, and complete as of the date of submission. Finally, it must include an acknowledgement that federal law prohibits any misrepresentations or omissions of material facts in connection with the conversion. 18 U.S.C. 1001.

The NCUA believes it vitally important that the directors of a converting credit union understand and acknowledge their fiduciary duties. NCUA intends the proposed certification requirement to impress upon directors their responsibility to conduct a thorough and complete analysis of the proposed conversion transaction and to make a decision in the best interests of the members.

Certification: Regulations Affecting Other Financial Institutions

At least three states require some form of certification during the conversion process. Hawaii requires that an institution submit the certification of two executive officers that the meeting and vote were valid; a copy of the conversion resolution that is certified to be true and correct; or certification that the institution has complied with all federal laws and regulations relating to conversion if applicable. Haw. Rev. Stat. 412:3–608(b), *see also* 606, 607. Michigan and Vermont require that a converting credit union file certified copies of all records of all conversion-related proceedings held by the governing body and the credit union's members. Mich. Comp. Laws 490.373(1)(i); 2005 Vt. Acts & Resolves 16. The OTS requires directors and other management officials associated with the de novo chartering of an MSB to file a Biographical and Financial Report which includes a certification. 12 CFR 543.3(e). The OTS also requires that, after the depositors' meeting on a conversion to a stock bank, the MSB must file a certified copy of each adopted conversion resolution, data regarding the votes cast and a legal opinion that the MSB conducted the depositors' meeting in compliance with all applicable state or federal laws and rules. 12 CFR 563b.240(a). NCUA's proposed certification requirement is similar to, but less onerous than, these states' and the OTS'' requirements.

Section 708a.5(b) retains a credit union's right to request NCUA make a preliminary determination regarding the intended methods and procedures applicable to the membership vote. The proposal expands that right to allow a credit union also to request review of all of its proposed notices, including the public notice it intends to publish before the board of directors votes on a conversion proposal. Under the

proposal, the NCUA Regional Director will make a determination on the request within 30 calendar days unless more time is required to review the submission or obtain additional information.

708a.6 Membership Approval of a Proposal To Convert

The current § 708a.6 provides that the board of the converting credit union must certify the results of the member vote to NCUA within ten days of the member vote. The board must also certify that the materials actually provided to the members were the same as those previously submitted to NCUA or provide an explanation for any differences.

As noted previously, the proposed § 708a.6 includes the requirements found in the current § 708a.4 that: (1) Members must approve the proposal by affirmative vote of the majority of members who vote; and (2) the vote must be by secret ballot conducted by an independent entity.

Proposed § 708a.6(b) requires the board of directors to set a date to determine member eligibility to vote. The voting date of record must be at least one hundred twenty days before the board of director's publishes the § 708a.3 notice of intent to consider conversion. NCUA is aware that professional depositors may attempt to join a credit union to profit from a conversion to a mutual savings bank. NCUA believes this proposed one hundred twenty day cut-off will help deter such activity and ensure that credit union members who are not professional depositors have an undiluted voice in the conversion decision.

The OTS rule governing conversions from MSBs to stock form states that voter eligibility is determined by a voting record date not more than 60 days nor less than 20 days before the depositor meeting. 12 CFR 563b.230. State law applies if a state-chartered MSB is converting. *Id.* The OTS rule is comparable to the provision for fixing the record date in the model MSB bylaws, which sets the record date for those eligible to receive notice or vote at not more than 60 days or less than 10 days before the date depositors are to take action. OTS Form 1577, OTS Applications Handbook, Section 410.29 (April 2001). While NCUA's proposed restriction on the voting record date is somewhat different than that set by OTS, NCUA believes it is reasonable.

708a.7 Certification of Vote on Conversion Proposal

Proposed § 708a.7 retains the requirement, currently located in § 708a.6, that the board of directors certify the results of the membership vote to NCUA. The proposal does not make any changes to this requirement.

708a.8 NCUA Oversight of Methods and Procedures of Membership Vote

The current 708a.7 provides that the Regional Director will issue a determination to approve or disapprove a credit union's methods and procedures for the membership vote within 10 calendar days of the receipt of the credit union's certification of the member vote.

The proposal lengthens this time period to 30 calendar days and relocates this provision from § 708a.7 to § 708a.8. Based on past NCUA experience, 10 days does not provide adequate time for the Regional Director to review all of the written materials provided to members, particularly if the credit union amended them in the process, and verify all of the information necessary to make the required determination.

Section 708a.8(d) of the proposal also contains a new provision that permits a credit union dissatisfied with a determination issued by the Regional Director to appeal to the NCUA Board for a final agency determination. Any appeal must be filed by the credit union within 30 calendar days after receipt of the Regional Director's determination.

708a.9 Other Regulatory Oversight of Methods and Procedures of Membership Vote

Proposed § 708a.9 retains the requirement, currently located in § 708a.8, that the entity that will regulate the credit union following conversion must verify the vote and may direct that a new vote be taken. The proposal does not make any changes to the requirement or its language.

708a.10 Completion of Conversion

This section retains the provisions in the current § 708a.9 stating that, once the credit union has received the approvals required in the current §§ 708a.7 and § 708a.8, it may complete the conversion. NCUA will then cancel its account insurance and, if it is a federal credit union, its charter.

The proposal amends the current rule to require a credit union to complete the conversion transaction within one year of the date of receipt of its approval from NCUA under proposed § 708a.8. NCUA believes in the normal course of events one year is more than enough time to complete a conversion, and, if it is not finalized in that time, problems may arise. For example, the credit union examination process, which involves detailed planning and resource allocation months in advance, becomes disrupted and uncertain, while the financial condition of a credit union may change rapidly. In addition, the composition and views of credit union membership change over time. At some point, the membership vote to approve conversion may no longer represent the views of the membership and so the vote becomes stale. Additionally, those individuals who join the credit union during this time period do not know if they are really joining a credit union or are becoming members of a potential bank. Accordingly, if the conversion process is not completed within a year, the process should end. The credit union should return to its normal examination cycle and, if the board of directors still desires to convert, it should reinitiate the conversion process at an appropriate time.

Conversion Completion: Regulations Affecting Other Financial Institutions

NCUA notes that the OTS rule for conversions from MSBs to stock form also includes a regulatory completion date. 12 CFR 563b.420. An MSB must complete its conversion not later than 24 months from the date of the membership's approval of the conversion. *Id.* While the completion time frame under the NCUA proposal is shorter than the OTS completion time, an MSB to stock conversion needs the additional time. Before an MSB can complete its stock conversion, there are numerous prerequisites. For instance, the OTS must first approve of the conversion, authorize the MSB's proxy statement, and declare the offering statement effective. Then the MSB must distribute order forms to eligible account holders and voting members. 12 CFR 563b.325(a), 563b.335.

708a.11 Limit on Compensation of Officials

Proposed § 708a.11 retains the limit on compensation for officials currently found in § 708a.10. The proposal does not make any modifications to this limit.

708.12. Member Access to Books and Records

The proposed rule includes a new provision on member access to the books and records of the converting credit union. The proposal states that members may request access to the books and records of a converting credit union for purposes such as facilitating contact with other members about the

conversion or obtaining copies of documents related to the due diligence performed by the credit union's board of directors. The proposal also states that federal credit unions will grant access under the same terms and conditions that a state-chartered for-profit corporation in the state in which the federal credit union is located must grant access to its shareholders.

This is not new law. NCUA's longstanding opinion is that the internal governance of federal credit unions, to the extent a matter is not addressed in federal statutes, regulations, or bylaws, should be determined by reference to the law governing for-profit corporations in the state in which the federal credit union is located. *See* NCUA OGC Legal Opinion 96–0541 (June 14, 1996). NCUA believes it is helpful to restate this position explicitly in part 708a.

Member access to the books and records of a state-chartered credit union is determined by applicable state law.

708a.13 Voting Guidelines.

Section 708a.11 of the current conversion rule contains some guidelines to assist converting credit unions in conducting their member vote. The current guidelines discuss the interplay between state and federal law affecting the vote, the determination of who is eligible to vote, and the time and place of the special meeting at which the members will cast their ballots.

The proposal moves the voting guidelines to § 708a.13. It retains the existing guidance and adds additional guidance on the use of voting incentives. It also renumbers the paragraphs.

In the past, some converting credit unions have offered incentives to members, such as entry to a prize raffle, to encourage participation in the conversion vote. Credit unions must exercise care in the design and execution of such incentives. The proposed voting guidelines state that credit union should ensure that the incentive complies with all applicable state, federal, and local laws; that the incentive should not be unreasonable in size; and that all materials promoting the incentive to members should make clear that they have an equal opportunity to participate in the incentive program regardless of whether they vote for or against the conversion.

NCUA has received some informal complaints in past MSB conversions that these voting incentives distract voters from the issues surrounding the conversion. Some have even suggested that NCUA prohibit these incentives. At this time, NCUA is not inclined to prohibit these incentives. NCUA invites commenters to provide specific information on whether and how such incentives detract from the fairness of the vote.

C. Request for Public Comment

NCUA's goal is to promulgate clear and understandable regulations that impose minimal regulatory burden. We request public comments on whether the proposed rule is understandable and minimally intrusive. We also seek specific suggestions to improve the content of the rule.

D. Regulatory Procedures

Regulatory Flexibility Act

The Regulatory Flexibility Act requires NCUA to prepare an analysis to describe any significant economic impact a rule may have on a substantial number of small credit unions, defined as those under ten million dollars in assets. This proposed rule amends the procedures an insured credit union must follow to convert to an MSB. Based on past experience with MSB conversions, NCUA does not anticipate any future conversions by credit unions with less than ten million dollars in assets. Accordingly, the proposed amendments would not have a significant economic impact on a substantial number of small credit unions, and, therefore, a regulatory flexibility analysis is not required.

Paperwork Reduction Act

Part 708a contains information collection requirements. As required by the Paperwork Reduction Act of 1995 (44 U.S.C. 3507(d)), NCUA has submitted a copy of this proposed regulation as part of an information collection package to the Office of Management and Budget (OMB) for its review and approval of a revision to Collection of Information, Conversion of Insured Credit Unions to Mutual Savings Banks, Control Number 3133–0153.

The current rule requires an insured credit union intending to convert to a mutual savings bank or savings association to provide notice and disclosure of its intent to convert to its members and NCUA and requires the credit union to provide additional information to NCUA at various points in the conversion process. These collection requirements are necessary to insure safety and soundness in the credit union industry and protect the interests of credit union members in the charter conversion context. NCUA previously estimated that the ten credit unions would convert each year and that the burden associated with the collection would amount to no more than 20 hours per credit union, for an aggregate burden of 200 burden hours annually.

The proposed modifications to part 708a will help ensure that credit union members receive sufficient information to enable them to make an informed decision regarding a vote on conversion to a mutual savings bank and will promote the likelihood the vote will be conducted in a fair and legal manner. The proposed modifications will also help ensure that NCUA has sufficient information to fulfill its statutory obligation to administer the member vote on conversion.

To achieve these goals, the proposal increases the collection requirements for converting credit unions. Specifically, the credit union must collect, post, and retain the comments of members sent to directors before directors vote on a conversion proposal. NCUA estimates that up to one hundred members may comment on a conversion proposal with an associated burden of 50 hours per converting credit union. NCUA also estimates that, after a credit union's board votes to adopt a conversion proposal, perhaps five members will request to communicate with other members through the credit union. Although the expense of this request is the responsibility of the requesting member, and so will keep the number of such requests down, NCUA estimates that the associated burden at the credit union for each request is about 50 hours, for an aggregate of about 250 hours for each converting credit union. The total burden for each credit union would then be 20 hours from the requirements retained from the original rule, plus an additional 300 hours from the proposed changes, for a total of 320 hours.

Based on recent history, NCUA now estimates that about three credit unions will seek to convert per year. Accordingly, the aggregate total collection burden is three times 320, or 960 hours, an increase of about 760 hours over the current rule.

Organizations and individuals that wish to submit comments on this information collection requirement should direct them to the Office of Information and Regulatory Affairs, OMB, Attn: Mark Menchik, Room 10226, New Executive Office Building, Washington, DC 20503, with a copy to Mary Rupp, Secretary of the Board, National Credit Union Administration, 1775 Duke Street, Alexandria, Virginia 22314–3428.

The NCUA considers comments by the public on this proposed collection of information in:

- Evaluating whether the proposed collection of information is necessary for the proper performance of the functions of the NCUA, including whether the information will have a practical use;
- Evaluating the accuracy of the NCUA's estimate of the burden of the proposed collection of information, including the validity of the methodology and assumptions used;
- Enhancing the quality, usefulness, and clarity of the information to be collected; and
- Minimizing the burden of collection of information on those who are to respond, including through the use of appropriate automated, electronic, mechanical, or other technological collection techniques or other forms of information technology; *e.g.*, permitting electronic submission of responses.

The Paperwork Reduction Act requires OMB to make a decision concerning the collection of information contained in the proposed regulation between 30 and 60 days after publication of this document in the **Federal Register**. Therefore, a comment to OMB is best assured of having its full effect if OMB receives it within 30 days of publication. This does not affect the deadline for the public to comment to the NCUA on the proposed regulation.

Executive Order 13132

Executive Order 13132 encourages independent regulatory agencies to consider the impact of their actions on state and local interests. In adherence to fundamental federalism principles, NCUA, an independent regulatory agency as defined in 44 U.S.C. 3502(5), voluntarily complies with the executive order. The proposed rule would not have substantial direct effects on the states, on the connection between the national government and the states, or on the distribution of power and responsibilities among the various levels of government. NCUA has determined that this proposed rule does not constitute a policy that has federalism implications for purposes of the executive order.

The Treasury and General Government Appropriations Act, 1999—Assessment of Federal Regulations and Policies on Families

The NCUA has determined that this proposed rule would not affect family well-being within the meaning of section 654 of the Treasury and General Government Appropriations Act, 1999, Public Law 105–277, 112 Stat. 2681 (1998).

List of Subjects in 12 CFR Part 708a

Charter conversions, Credit unions.

By the National Credit Union Administration Board on June 22, 2006.

Mary F. Rupp,

Secretary of the Board.

For the reasons stated above, NCUA proposes to revise 12 CFR part 708a as follows:

PART 708a—CONVERSION OF INSURED CREDIT UNIONS TO MUTUAL SAVINGS BANKS

Sec.

708a.1 Definitions.
708a.2 Authority to convert.
708a.3 Board of directors' approval and members' opportunity to comment.
708a.4 Disclosures and communications to members.
708a.5 Notice to NCUA.
708a.6 Membership approval of a proposal to convert.
708a.7 Certification of vote on conversion proposal.
708a.8 NCUA oversight of methods and procedures of membership vote.
708a.9 Other regulatory oversight of methods and procedures of membership vote.
708a.10 Completion of conversion.
708a.11 Limit on compensation of officials.
708a.12 Member access to books and records.
708a.13 Voting guidelines.

Authority: 12 U.S.C. 1766, 12 U.S.C. 1785(b).

§ 708a.1 Definitions.

As used in this part:

Clear and conspicuous means text that is in bold type in a font at least as large as that used for headings, but in no event smaller than 12 point.

Credit union has the same meaning as insured credit union in section 101 of the Federal Credit Union Act.

Federal banking agencies have the same meaning as in section 3 of the Federal Deposit Insurance Act.

Mutual savings bank and *savings association* have the same meaning as in section 3 of the Federal Deposit Insurance Act.

Regional director means the director of the NCUA regional office for the region where a natural person credit union's main office is located. For corporate credit unions, *regional director* means the director of NCUA's Office of Corporate Credit Unions.

Senior management official means a chief executive officer, an assistant chief executive officer, a chief financial officer, and any other senior executive officer as defined by the appropriate federal banking agencies pursuant to section 32(f) of the Federal Deposit Insurance Act, 12 U.S.C. 1831i(f).

§ 708a.2 Authority to convert.

A credit union, with the approval of its members, may convert to a mutual savings bank or a savings association that is in mutual form without the prior approval of the NCUA, subject to applicable law governing mutual savings banks and savings associations and the other requirements of this part.

§ 708a.3 Board of directors' approval and members' opportunity to comment.

(a) A credit union's board of directors must comply with the following notice requirements before voting on a proposal to convert.

(1) No later than 30 days before a board of directors votes on a proposal to convert, it must publish a notice in a general circulation newspaper, or in multiple newspapers if necessary, serving all areas where the credit union has an office, branch, or service center. It must also post the notice in a clear and conspicuous fashion in the credit union's home office and branch offices and on the credit union's Web site, if it has one. If the notice is not on the home page of the Web site, the home page must have a clear and conspicuous link, visible on a standard monitor without scrolling, to the notice.

(2) The public notice must include the following:

(i) The name and address of the credit union;

(ii) The type of institution to which the credit union's board is considering a proposal to convert;

(iii) A brief statement of why the board is considering the conversion and the major positive and negative effects of the proposed conversion;

(iv) A statement that directs members to submit any comments on the proposal to the credit union's board of directors by regular mail, electronic mail, or facsimile;

(v) The date on which the board plans to vote on the proposal and the date by which members must submit their comments for consideration, which may not be more than 5 days before the board vote;

(vi) The street address, electronic mail address, and facsimile number of the credit union where members may submit comments and the Web site address where the public and members may view others' comments; and

(vii) A statement that, in the event the board approves the proposal to convert, the proposal will be submitted to the membership of the credit union for a vote following a notice period that is no shorter than 90 days.

(3) The board of directors must approve publication of the notice.

(b) The credit union must collect member comments and retain copies at

the credit union's main office until the conversion process is completed. If the credit union maintains a Web site, the credit union must post the comments in a clear and conspicuous fashion. If the credit union believes a particular member submission is not proper for posting, it will provide that submission to the Regional Director for review as described in § 708a.4(f)(5).

(c) The board of directors may vote on the conversion proposal only after reviewing and considering all member comments. The conversion proposal may only be approved by an affirmative vote of a majority of board members who have determined the conversion is in the best interests of the members. If approved, the board of directors must set a date for a vote on the proposal by the members of the credit union.

§ 708a.4 Disclosures and communications to members.

(a) After the board of directors has complied with § 708a.3 and approves a conversion proposal, the credit union must provide written notice of its intent to convert to each member who is eligible to vote on the conversion. The notice to members must be submitted 90 calendar days, 60 calendar days, and 30 calendar days before the date of the membership vote on the conversion. A ballot must be included in the same envelope as the 30-day notice and only in the 30-day notice. A converting credit union may not distribute ballots with either the 90-day or 60-day notice, in any other written communications, or in person before the 30-day notice is sent.

(b)(1) The notice to members must adequately describe the purpose and subject matter of the vote to be taken at the special meeting or by submission of the written ballot. The notice must clearly inform members that they may vote at the special meeting or by submitting the written ballot. The notice must state the date, time, and place of the meeting.

(2) The notices that are submitted 90 and 60 days before the membership vote on the conversion must state in a clear and conspicuous fashion that a written ballot will be mailed together with another notice 30 days before the date of the membership vote on conversion. The notice submitted 30 days before the membership vote on the conversion must state in a clear and conspicuous fashion that a written ballot is included in the same envelope as the 30-day notice materials.

(3) For purposes of facilitating the member-to-member contact described in paragraph (f) of this section, the 90-day and 60-day notices must indicate the number of credit union members eligible to vote on the conversion proposal and how many members have agreed to accept communications from the credit union in electronic form.

(4) The member ballot must include:

(i) A brief description of the proposal (*e.g.*, ''Proposal: Approval of the Plan Charter Conversion by which (insert name of credit union) will convert its charter to that of a federal mutual savings bank.'');

(ii) Two blocks marked respectively as ''FOR'' and ''AGAINST;'' and

(iii) The following language: ''A vote FOR the proposal means that the credit union will become a bank. A vote AGAINST the proposal means that the credit union will remain a credit union.'' This language must be displayed in a clear and conspicuous fashion immediately beneath the FOR and AGAINST blocks.

(5) The ballot may also include voting instructions and the recommendation of the board of directors (*i.e.*, ''Your Board of Directors recommends a vote FOR the Plan of Conversion'') but may not include any further information without the prior written approval of the Regional Director.

(c) An adequate description of the purpose and subject matter of the member vote on conversion, as required by paragraph (b) of this section, must include:

(1) A clear and conspicuous disclosure that the conversion from a credit union to a mutual savings bank could lead to members losing their ownership interests in the credit union if the mutual savings bank subsequently converts to a stock institution and the members do not become stockholders;

(2) A clear and conspicuous disclosure of how a conversion from a credit union to a mutual savings bank will affect members' voting rights and if the mutual savings bank intends to base voting rights on account balances;

(3) A clear and conspicuous disclosure of any conversion-related economic benefit a director or senior management official will or may receive including receipt of or an increase in compensation and an explanation of any foreseeable stock-related benefits associated with a subsequent conversion to a stock institution or mutual holding company structure. The explanation of stock-related benefits must include a comparison of the opportunities to acquire stock available to officials and employees with those opportunities available to the general membership;

(4) A clear and conspicuous disclosure of how the conversion from a credit union to a mutual savings bank will affect the institution's ability to make non-housing-related consumer loans because of a mutual savings bank's obligations to satisfy certain lending requirements as a mutual savings bank. This disclosure should specify possible reductions in some kinds of loans to members; and

(5) An affirmative statement that, at the time of conversion to a mutual savings bank, the credit union does or does not intend to convert to a stock institution or a mutual holding company structure.

(d)(1) A converting credit union must provide the following disclosures in a clear and conspicuous fashion with the 90-, 60-, and 30-day notices its sends to its members regarding the conversion:

IMPORTANT REGULATORY DISCLOSURE ABOUT YOUR VOTE

The National Credit Union Administration, the federal government agency that supervises credit unions, requires [insert name of credit union] to provide the following disclosures:

1. LOSS OF CREDIT UNION MEMBERSHIP. A vote ''FOR'' the proposed conversion means your credit union will become a mutual savings bank. A vote ''AGAINST'' the proposed conversion means your credit union will remain a credit union.

2. RATES ON LOANS AND SAVINGS. If your credit union converts to a bank, you may experience changes in your loan and savings rates. Available historic data indicates that, for most loan products, credit unions on average charge lower rates than banks. For most savings products, credit unions on average pay higher rates than banks.

3. POTENTIAL PROFITS BY OFFICERS AND DIRECTORS. Conversion to a mutual savings bank is often the first step in a two-step process to convert to a stock-issuing bank or holding company structure. In such a scenario, the officers and directors of the institution often profit by obtaining stock in excess of that available to other members.

(2) This text must be placed in a box, must be the only text on the front side of a single piece of paper, and must be placed so that the member will see the text after reading the credit union's cover letter but before reading any other

part of the member notice. The back side of the paper must be blank. A converting credit union may modify this text only with the prior written consent of the Regional Director and, in the case of a state-chartered credit union, the appropriate state regulatory agency.

(e) All written communications from a converting credit union to its members regarding the conversion must be written in a manner that is simple and easy to understand. Simple and easy to understand means the communications are written in plain language designed to be understood by ordinary consumers and use clear and concise sentences, paragraphs, and sections. For purposes of this part, examples of factors to be considered in determining whether a communication is in plain language and uses clear and concise sentences, paragraphs and sections include the use of short explanatory sentences; use of definite, concrete, everyday words; use of active voice; avoidance of multiple negatives; avoidance of legal and technical business terminology; avoidance of explanations that are imprecise and reasonably subject to different interpretations; and use of language that is not misleading.

(f)(1) A converting credit union must mail or e-mail a requesting member's proper conversion-related materials to other members eligible to vote within seven days of receiving such a request if:

(i) A credit union's board of directors has adopted a proposal to convert;

(ii) A member makes a written request that the credit union mail or e-mail materials for the member;

(iii) The request is received by the credit union no later than 35 days after it sends out the 90-day member notice; and

(iv) The requesting member agrees to reimburse the credit union for the reasonable expenses of mailing or e-mailing the materials and also provides the credit union with an appropriate advance payment.

(2) A member's request must indicate if the member wants the materials mailed or e-mailed. If a member requests that the materials be mailed, the credit union will mail the materials to all eligible voters. If a member requests the materials be e-mailed, the credit union will e-mail the materials to all members who have agreed to accept communications electronically from the credit union. The subject line of the e-mail will be ''Proposed Credit Union Conversion—Views of Member (insert member name).''

(3)(i) A converting credit union may, at its option, include the following statement with a member's material:

On (date), the board of directors of (name of converting credit union) adopted a proposal to convert from a credit union to a mutual savings bank. Credit union members who wish to express their opinions about the proposed conversion to other members may provide those opinions to (name of credit union). By law, the credit union, at the requesting members' expense, must then send those opinions to the other members. The attached document represents the opinion of a member of this credit union. This opinion is a personal opinion and does not necessarily reflect the views of the management or directors of the credit union.

(ii) A converting credit union may not add anything other than this statement to a member's material without the prior approval of the Regional Director.

(4) The term ''proper conversion-related materials'' does not include materials that:

(i) Due to size or similar reasons are impracticable to mail or e-mail;

(ii) Are false or misleading with respect to any material fact;

(iii) Omit a material fact necessary to make the statements in the material not false or misleading;

(iv) Relate to a personal claim or a personal grievance, or solicit personal gain or business advantage by or on behalf of any party;

(v) Relate to any matter, including a general economic, political, racial, religious, social, or similar cause, that is not significantly related to the proposed conversion;

(vi) Directly or indirectly and without expressed factual foundation impugn a person's character, integrity, or reputation;

(vii) Directly or indirectly and without expressed factual foundation make charges concerning improper, illegal, or immoral conduct; or

(viii) Directly or indirectly and without expressed factual foundation make statements impugning the stability and soundness of the credit union.

(5) If a converting credit union believes some or all of a member's request is not proper it must submit the member materials to the Regional Director within seven days of receipt. The credit union must include with its transmittal letter a specific statement of why the materials are not proper and a specific recommendation for how the materials should be modified, if possible, to make them proper. The Regional Director will review the communication, communicate with the requesting member, and respond to the credit union within seven days with a determination on the propriety of the materials. The credit union must then immediately mail or e-mail the material to the members if so directed by NCUA.

(6) A credit union must deliver to its members all materials that meet the requirements of § 708a.4(f) on or before the date the members receive the 30-day notice and associated ballot. If a credit union cannot meet this delivery requirement, it must postpone mailing the 30-day notice until it can deliver the member materials. If a credit union postpones the mailing of the 30-day notice, it must also postpone the special meeting by the same number of days.

(7) The term ''appropriate advance payment'' means:

(i) For requests to mail materials to all eligible voters, a payment in the amount of fifty cents times the number of eligible voters, and

(ii) For requests to e-mail materials only to members that have agreed to accept electronic communications, a payment in the amount of two hundred dollars.

(8) If a credit union posts conversion-related information or material on its Web site, then it must simultaneously make a portion of its Web site available free of charge to its members to post and share their opinions on the conversion. A link to the portion of the Web site available to members to post their views on the conversion must be marked ''Members: Share your views on the proposed conversion and see other members views'' and the link must also be visible on all pages on which the credit union posts its own conversion-related information or material, as well as on the credit union's homepage. If a credit union believes a particular member submission is not proper for posting, it will provide that submission to the Regional Director for review as described in paragraph (f)(5) of this section.

(9) A converting credit union must inform members with the 90-day notice that if they wish to provide their opinions about the proposed conversion to other members they can submit their opinions in writing to the credit union no later than 35 days from the date of the notice and the credit union will forward those opinions to other members. The 90-day notice will provide a contact at the credit union for delivery of communications, will explain that members must agree to reimburse the credit union's costs of transmitting the communication including providing an advance payment, and will refer members to this section of NCUA's rules for further information about the communication process. The credit union, at its option, may include additional factual information about the communication process with its 90-day notice.

§ 708a.5 Notice to NCUA.

(a) If a converting credit union's board of directors approves a proposal to convert, it must provide the Regional Director with notice of its intent to convert during the 90 calendar day

period preceding the date of the membership vote on the conversion.

(1) A credit union must give notice to the Regional Director of its intent to convert by providing a letter describing the material features of the conversion or a copy of the filing the credit union has made or intends to make with another federal or state regulatory agency in which the credit union seeks that agency's approval of the conversion. A credit union must include with the notice to the Regional Director copies of the notices the credit union has provided or intends to provide to members under §§ 708a.3 and 708a.4. The credit union must also include a copy of the ballot form and all written materials the credit union has distributed or intends to distribute to members. The term ''written materials'' includes written documentation or information of any sort, including electronic communications posted on a Web site or transmitted by electronic mail.

(2) As part of its notice to NCUA of intent to convert, the credit union's board of directors must provide the Regional Director with a certification of its support for the conversion proposal and plan. Each director who voted in favor of the conversion proposal must sign the certification. The certification must contain the following:

(i) A statement that each director signing the certification supports the proposed conversion and believes the proposed conversion is in the best interests of the members of the credit union;

(ii) A description of all materials submitted to the Regional Director with the notice and certification;

(iii) A statement that each board member signing the certification has examined all these materials carefully and these materials are true, correct, current, and complete as of the date of submission; and

(iv) An acknowledgement that federal law (18 U.S.C. 1001) prohibits any misrepresentations or omissions of material facts, or false, fictitious or fraudulent statements or representations made with respect to the certification or the materials provided to the Regional Director or any other documents or information provided to the members of the credit union or NCUA in connection with the conversion.

(3) A state-chartered credit union must state as part of the notice required by § 708a.5(a) if its state chartering law permits it to convert to a mutual savings bank and provide the specific legal citation. A state-chartered credit union will remain subject to any state law requirements for conversion that are more stringent than those this part imposes, including any internal governance requirements, such as the requisite membership vote for conversion and the determination of a member's eligibility to vote. If a state-chartered credit union relies for its authority to convert to a mutual savings bank on a state law parity provision, meaning a provision in state law permitting a state-chartered credit union to operate with the same or similar authority as a federal credit union, it must:

(i) Include in its notice a statement that its state regulatory authority agrees that it may rely on the state law parity provision as authority to convert; and

(ii) Indicate its state regulatory authority's position as to whether federal law and regulations or state law will control internal governance issues in the conversion such as the requisite membership vote for conversion and the determination of a member's eligibility to vote.

(b) If it chooses, a credit union may seek a preliminary determination from the Regional Director regarding any of the notices required under this part and its proposed methods and procedures applicable to the membership conversion vote. The Regional Director will make a preliminary determination regarding the notices and methods and procedures applicable to the membership vote within 30 calendar days of receipt of a credit union's request for review unless the Regional Director extends the period as necessary to request additional information or review a credit union's submission. A credit union's prior submission of any notice or proposed voting procedures does not relieve the credit union of its obligation to certify the results of the membership vote required by § 708a.6 or eliminate the right of the Regional Director to disapprove the actual methods and procedures applicable to the membership vote if the credit union fails to conduct the membership vote in a fair and legal manner consistent with the Federal Credit Union Act and these rules.

§ 708a.6 Membership approval of a proposal to convert.

(a) A proposal for conversion approved by a board of directors requires approval by a majority of the members who vote on the proposal.

(b) The board of directors must set a voting record date to determine member voting eligibility that is at least one hundred twenty days before the publication of notice required in § 708a.3.

(c) A member may vote on a proposal to convert in person at a special meeting held on the date set for the vote or by written ballot filed by the member. The vote on the conversion proposal must be by secret ballot and conducted by an independent entity. The independent entity must be a company with experience in conducting corporate elections. No official or senior management official of the credit union or the immediate family members of any official or senior management official may have any ownership interest in or be employed by the independent entity.

§ 708a.7 Certification of vote on conversion proposal.

(a) The board of directors of the converting credit union must certify the results of the membership vote to the Regional Director within 10 calendar days after the vote is taken.

(b) The certification must also include a statement that the notice, ballot and other written materials provided to members were identical to those submitted to NCUA pursuant to § 708a.5. If the board cannot certify this, the board must provide copies of any new or revised materials and an explanation of the reasons for any changes.

§ 708a.8 NCUA oversight of methods and procedures of membership vote.

(a) The Regional Director will review the methods by which the membership vote was taken and the procedures applicable to the membership vote. The Regional Director will determine: If the notices and other communications to members were accurate, not misleading, and timely; the membership vote was conducted in a fair and legal manner; and the credit union has otherwise complied with part 708a.

(b) After completion of this review, the Regional Director will issue a determination that the methods and procedures applicable to the membership vote are approved or disapproved. The Regional Director will issue this determination within 30 calendar days of receipt from the credit union of the certification of the result of the membership vote required under § 708a.7 unless the Regional Director extends the period as necessary to request additional information or review the credit union's submission. Approval of the methods and procedures under this paragraph remains subject to a credit union fulfilling the requirements in § 708a.10 for timely completion of the conversion.

(c) If the Regional Director disapproves the methods by which the membership vote was taken or the procedures applicable to the membership vote, the Regional Director may direct that a new vote be taken.

(d) A converting credit union may appeal the Regional Director's determination to the NCUA Board for a

final agency decision. The credit union must file the appeal within 30 days after receipt of the Regional Director's determination. The NCUA Board will act on the appeal within 90 days of receipt.

§ 708a.9 Other regulatory oversight of methods and procedures of membership vote.

The federal or state regulatory agency that will have jurisdiction over the financial institution after conversion must verify the membership vote and may direct that a new vote be taken, if it disapproves of the methods by which the membership vote was taken or the procedures applicable to the membership vote.

§ 708a.10 Completion of conversion.

(a) After receipt of the approvals under § 708a.8 and § 708a.9 the credit union may complete the conversion. The credit union must complete the conversion within one year of the date of receipt of NCUA approval under § 708a.8. If a credit union fails to complete the conversion within one year the Director will disapprove of the methods and procedures. The credit union's board of directors must then adopt a new conversion proposal and solicit another member vote if it still desires to convert.

(b) After notification by the board of directors of the mutual savings bank or mutual savings association that the conversion has been completed, the NCUA will cancel the insurance certificate of the credit union and, if applicable, the charter of a federal credit union.

§ 708a.11 Limit on compensation of officials.

No director or senior management official of an insured credit union may receive any economic benefit in connection with the conversion of a credit union other than compensation and other benefits paid to directors or senior management officials of the converted institution in the ordinary course of business.

§ 708a.12 Member access to books and records.

Members may request access to the books and records of a converting credit union for purposes of facilitating contact with other members about the conversion or obtaining copies of documents related to the due diligence performed by the credit union's board of directors. Federal credit unions will grant access under the same terms and conditions that a state-chartered for-profit corporation in the state in which the federal credit union is located must grant access to its shareholders.

§ 708a.13 Voting guidelines.

A converting credit union must conduct its member vote on conversion in a fair and legal manner. NCUA provides the following guidelines as suggestions to help a credit union obtain a fair and legal vote and otherwise fulfill its regulatory obligations. These guidelines are not an exhaustive checklist and do not by themselves guarantee a fair and legal vote.

(a) *Applicability of state law.* While NCUA's conversion rule applies to all conversions of federally insured credit unions, federally insured state-chartered credit unions (FISCUs) are also subject to state law on conversions. NCUA's position is that a state legislature or state supervisory authority may impose conversion requirements more stringent or restrictive than NCUA's. States that permit this kind of conversion may have substantive and procedural requirements that vary from federal law. For example, there may be different voting standards for approving a vote. While the Federal Credit Union Act requires a simple majority of those who vote to approve a conversion, some states have higher voting standards requiring two-thirds or more of those who vote. A FISCU should be careful to understand both federal and state law to navigate the conversion process and conduct a proper vote.

(b) *Eligibility to vote.* (1) Determining who is eligible to cast a ballot is fundamental to any vote. No conversion vote can be fair and legal if some members are improperly excluded. A converting credit union should be cautious to identify all eligible members and make certain they are included on its voting list. NCUA recommends that a converting credit union establish internal procedures to manage this task.

(2) A converting credit union should be careful to make certain its member list is accurate and complete. For example, when a credit union converts from paper record keeping to computer record keeping, some member names may not transfer unless the credit union is careful in this regard. This same problem can arise when a credit union converts from one computer system to another where the software is not completely compatible.

(3) Problems with keeping track of who is eligible to vote can also arise when a credit union converts from a federal charter to a state charter or vice versa. NCUA is aware of an instance where a federal credit union used membership materials allowing two or more individuals to open a joint account and also allowed each to become a member. The federal credit union later converted to a state-chartered credit union that, like most other state-chartered credit unions in its state, used membership materials allowing two or more individuals to open a joint account but only allowed the first person listed on the account to become a member. The other individuals did not become members as a result of their joint account, but were required to open another account where they were the first or only person listed on the account. Over time, some individuals who became members of the federal credit union as the second person listed on a joint account were treated like those individuals who were listed as the second person on a joint account opened directly with the state-chartered credit union. Specifically, both of those groups were treated as non-members not entitled to vote. This example makes the point that a credit union must be diligent in maintaining a reliable membership list.

(c) *Scheduling the special meeting.* NCUA's conversion rule requires a converting credit union to permit members to vote by written mail ballot or in person at a special meeting held for the purpose of voting on the conversion. Although most members may choose to vote by mail, a significant number may choose to vote in person. As a result, a converting credit union should be careful to conduct its special meeting in a manner conducive to accommodating all members wishing to attend, including selecting a meeting location that can accommodate the anticipated number of attendees and is conveniently located. The meeting should also be held on a day and time suitable to most members' schedules. A credit union should conduct its meeting in accordance with applicable federal and state law, its bylaws, Robert's Rules of Order or other appropriate parliamentary procedures, and determine before the meeting the nature and scope of any discussion to be permitted.

(d) *Voting incentives.* Some credit unions may wish to offer incentives to members, such as entry to a prize raffle, to encourage participation in the conversion vote. The credit union must exercise care in the design and execution of such incentives.

(1) The credit union should ensure that the incentive complies with all applicable state, federal, and local laws.

(2) The incentive should not be unreasonable in size. If the board desires to use such incentives, the cost of the incentive should be included in the directors' deliberations and

determination that the conversion is in the best interests of the credit union's members.

(3) The credit union should ensure that the incentive is available to every member that votes regardless of how he or she votes. All of the credit union's materials promoting the incentive to the membership should make clear to the member that they have an equal opportunity to participate in the incentive program regardless of whether they vote for or against the conversion.

[FR Doc. 06–5728 Filed 6–27–06; 8:45 am]

BILLING CODE 7535–01–P

Federal Register

Wednesday,
June 28, 2006

Part VI

Department of Housing and Urban Development

Changes in Certain Multifamily Mortgage Insurance Premiums; Notice

DEPARTMENT OF HOUSING AND URBAN DEVELOPMENT

[Docket No. FR–4679–N–11]

Changes in Certain Multifamily Mortgage Insurance Premiums

AGENCY: Office of the Assistant Secretary for Housing—Federal Housing Commissioner, HUD.

ACTION: Notice.

SUMMARY: In accordance with HUD regulations, this notice announces changes in the mortgage insurance premiums (MIP) for Federal Housing Administration (FHA) multifamily mortgage insurance programs whose commitments will be issued or reissued in Fiscal Year 2007. Under the Department of Housing and Urban Development Reform Act of 1989 and HUD's implementing instructions, a sponsor is required to submit a certification regarding governmental assistance, including any low-income housing tax credits, with all mortgage insurance applications.

DATES: *Comment Due Date:* July 28, 2006.

ADDRESSES: Interested persons are invited to submit comments regarding this notice to the Regulations Division, Office of General Counsel, Room 10276, Department of Housing and Urban Development, 451 Seventh Street, SW., Washington, DC 20410–0500. Interested persons also may submit comments electronically through The Federal eRulemaking Portal at *www.regulations.gov*. HUD strongly encourages commenters to submit comments electronically in order to make them immediately available to the public. Commenters should follow the instructions provided on that site to submit comments electronically.

Facsimile (fax) comments are not acceptable. In all cases, communications must refer to the docket number and title. All comments and communications submitted to HUD will be available, without change, for public inspection and copying between 8 a.m. and 5 p.m. weekdays at the above address. Due to security measures at the HUD Headquarters building, an advance appointment to review the public comments must be scheduled by calling the Regulations Division at (202) 708–3055 (this is not a toll-free number). Copies of all comments submitted are available for inspection and downloading at *www.regulations.gov*.

FOR FURTHER INFORMATION CONTACT: Eric Stevenson, Director, Policy Division, Office of Multifamily Development, Department of Housing and Urban Development, 451 Seventh Street, SW., Washington, DC 20410–8000, Telephone: (202) 708–1142 (this is not a toll-free number). Hearing-or speech-impaired individuals may access these numbers through TTY by calling the Federal Information Relay Service at (800) 877–8339 (this is a toll-free number).

SUPPLEMENTARY INFORMATION:

Introduction

HUD's regulations at 24 CFR 207.252, 207.252a and 207.254 provide that instead of setting the MIP at one specific rate for all programs, the Secretary is permitted to change an MIP program by program within the full range of HUD's statutory authority of one fourth of one percent to one percent of the outstanding mortgage principal per annum through a notice, as provided in section 203(c)(1) of the National Housing Act (the Act) (12 U.S.C. 1709(c)(1)). The rule states that HUD will provide a 30-day period for public comment on notices changing MIPs in multifamily insured housing programs.

Pursuant to this 30-day comment procedure, this notice announces changes for FY 2006 in the MIP for programs authorized under the Act. The effective date for these changes is October 1, 2006.

These changes affect multifamily housing commitments issued or reissued on or after October 1, 2006.

A. The following MIPs are unchanged:

- All sections of the Act where the mortgagor equity is produced from the proceeds of the sale of low-income housing tax credits (LIHTC): The MIP remains at 45 basis points.
- The following sections of the Act, without LIHTC: Section 213 Cooperative Housing remains at 50 basis points, section 221(d)(3) Nonprofit/Cooperative mortgagor remains at 80 basis points, section 223(d) Operating Loss Loans for apartments and health care facilities remain at 80 basis points and section 241(a) Improvements/Additions for apartments only remain at 80 basis points.
- Premiums for risk sharing applications under sections 542(b) and 542(c) of the Housing and Community Development Act of 1992 remain at 50 basis points. Risk-sharing premiums do not appear on the following chart because the premium paid by a risk-sharing Housing Finance Agency depends on the percentage of risk assumed by it in accordance with regulations at 24 CFR 266.604. The premium paid by Fannie Mae or Freddie Mac is 50% of 50 basis points. The 50 basis points applies to all risk-sharing loans whether or not they have LIHTC.

Listed below are the sections of the Act that will have an increase in the MIP rate. All increases apply to insured loans without LIHTC:

- 207 Manufactured Home Parks and New Construction/Substantial Rehabilitation (NC/SR): The MIP will increase from 50 to 77 basis points.
- 221(d)(4) NC/SR: The MIP will increase from 45 to 77 basis points.
- 232 NC/SR Health Care Facilities: The MIP will increase from 57 to 80 basis points.
- 220 Urban Renewal Housing: The MIP will increase from 50 to 77 basis points.
- 231 Elderly Housing: The MIP will increase from 50 to 77 basis points.
- 207/223(f) Refinance or Purchase of Apartments: The MIP will increase from 45 to 77 basis points.
- 232/223(f) Refinance or Purchase of Health Care Facilities: The MIP will increase from 50 to 80 basis points.
- 223(a)(7) Refinance of Apartments: The MIP will increase from 45 to 77 basis points.
- 223(a)(7) Refinance of Health Care Facilities: The MIP will increase from 50 to 80 basis points.
- 241(a) Improvements/Additions for Health Care Facilities: The MIP will increase from 57 to 80 basis points.
- 242 Hospitals: The MIP will increase from 50 to 80 basis points.
- Title XI—Group Practice: The MIP will increase from 50 to 80 basis points.

Credit Subsidy

Appropriated positive credit subsidy is required for loan guarantee commitments under the three sections of the Act listed. The MIPs remain the same as specified earlier in this notice. If the mortgagor's equity is produced from LIHTC for Sections 221(d)(3) and 241(a), a credit subsidy obligation will not be required. Only nonprofit and nonprofit cooperative mortgagors can obtain a 100 percent mortgage under Section 221(d)(3) of the Act. The nonprofits cannot be under the control or influence of profit-motivated entities and continue to require HUD approval prior to issuance of the firm commitment.

- Section 221(d)(3) for new construction or substantial rehabilitation (NC/SR).
- Section 223(d) for operating loss loans for both apartments and health care facilities.
- Section 241(a) for supplemental loans for additions or improvements for apartments only.

The mortgage insurance premiums to be in effect for FHA firm commitments issued or reissued in FY 2007 are shown in the table below:

FISCAL YEAR 2007 MIP RATES—MULTIFAMILY LOAN PROGRAM

Housing loan programs	FY07 basis points
207 Multifamily Housing NC/SR without LIHTC	77
207 Multifamily Housing NC/SR with LIHTC	45
207 Manufactured Home Parks without LIHTC	77
207 Manufactured Home Parks with LIHTC	45
221(d)(3) Nonprofit/Cooperative mortgagor without LIHTC	80
221(d)(3) Limited dividend mortgagor with LIHTC	45
213 Coop	50
221(d)(4) NC/SR with LIHTC	45
221(d)(4) NC/SR without LIHTC	77
220 Urban Renewal Housing with LIHTC	45
220 Urban Renewal Housing without LIHTC	77
231 Elderly Housing without LIHTC	77
231 Elderly Housing with LIHTC	45
207/223(f) Refinance or Purchase for Apartments with LIHTC	*45
207/223(f) Refinance or Purchase for Apartments without LIHTC	*77
223(a)(7) Refinance of Apartments with LIHTC	45
223(a)(7) Refinance of Apartments without LIHTC	77
223d Operating loss loan for Apartments	80
241(a) Improvements/additions for Apartments/coop	80
241(a) Improvements/additions for Apartments/coop with LIHTC	45

Health care facility loan programs	FY07 basis points
232 NC/SR Health Care Facilities	80
232 NC/SR—Assisted Living Facilities with LIHTC	45
232/223(f) Refinance for Health Care Facilities without LIHTC	*80
232/223(f) Refinance for Health Care Facilities with LIHTC	*45
223(a)(7) Refinance of Health Care Facilities without LIHTC	80
223(a)(7) Refinance of Health Care Facilities with LIHTC	45
223d Operating loss loan for Health Care Facilities	80
241(a) Improvements/additions for Health Care Facilities without LIHTC	80
241(a) Improvements/additions for Health Care Facilities With LIHTC	45
242 Hospitals	80
Title XI—Group Practice	80

*The First Year MIP for the section 207/223(f) loans for apartments is one percent for the first year, as specified in sections 24 CFR 207.252b(a). The first year MIP for 232/223(f) health care facilities remains at 100 basis points.

Applicable Mortgage Insurance Premium procedures

The MIP regulations are found in 24 CFR part 207. This notice is published in accordance with the procedures stated in 24 CFR 207.252, 207.252(a), and 207.254.

Transition Guidelines

A. General

FHA will honor outstanding commitments issued before October 1, 2006 and endorse the notes for insurance.

B. Extension of Outstanding Firm Commitments

FHA may extend or amend outstanding firm commitments issued prior to October 1, 2006 when the Hub/Program Center determines that the underwriting conclusions (rents, expenses, construction costs, mortgage amount and cash required to close) are still valid. If the commitment has been extended 90 days from the original expiration date, the mortgagee must provide updated appraisal, market cost and mortgage credit information. If the loan is processed under Traditional Application Processing, the Hub/program center must update its own conclusions (appraisal/market study, cost and mortgage credit underwriting). A new market study is required if the existing study is over one year old.

C. Reopening of Expired Firm Commitments

Reopening requests for expired firm commitments will be reprocessed by FHA field staff with updated appraisal, market, cost and mortgage credit information. The new MIP will apply to reopened commitments which are reissued on or after October 1, 2006.

After expiration of the 90-day reopening period, mortgagees are required to submit new applications with the $3 per thousand application fee.

Dated: June 22, 2006.

Brian D. Montgomery,

Assistant Secretary for Housing—Federal Housing Commissioner, H.

[FR Doc. 06–5866 Filed 6–27–06; 8:45 am]

BILLING CODE 4210–67–P

Federal Register

Wednesday,
June 28, 2006

Part VII

The President

Executive Order 13406—Protecting the Property Rights of the American People

Executive Order 13407—Public Alert and Warning System

Federal Register
Vol. 71, No. 124
Wednesday, June 28, 2006

Presidential Documents

Title 3—

The President

Executive Order 13406 of June 23, 2006

Protecting the Property Rights of the American People

By the authority vested in me as President by the Constitution and the laws of the United States of America, and to strengthen the rights of the American people against the taking of their private property, it is hereby ordered as follows:

Section 1. *Policy.* It is the policy of the United States to protect the rights of Americans to their private property, including by limiting the taking of private property by the Federal Government to situations in which the taking is for public use, with just compensation, and for the purpose of benefiting the general public and not merely for the purpose of advancing the economic interest of private parties to be given ownership or use of the property taken.

Sec. 2. *Implementation.* (a) The Attorney General shall:

(i) issue instructions to the heads of departments and agencies to implement the policy set forth in section 1 of this order; and

(ii) monitor takings by departments and agencies for compliance with the policy set forth in section 1 of this order.

(b) Heads of departments and agencies shall, to the extent permitted by law:

(i) comply with instructions issued under subsection (a)(i); and

(ii) provide to the Attorney General such information as the Attorney General determines necessary to carry out subsection (a)(ii).

Sec. 3. *Specific Exclusions.* Nothing in this order shall be construed to prohibit a taking of private property by the Federal Government, that otherwise complies with applicable law, for the purpose of:

(a) public ownership or exclusive use of the property by the public, such as for a public medical facility, roadway, park, forest, governmental office building, or military reservation;

(b) projects designated for public, common carrier, public transportation, or public utility use, including those for which a fee is assessed, that serve the general public and are subject to regulation by a governmental entity;

(c) conveying the property to a nongovernmental entity, such as a telecommunications or transportation common carrier, that makes the property available for use by the general public as of right;

(d) preventing or mitigating a harmful use of land that constitutes a threat to public health, safety, or the environment;

(e) acquiring abandoned property;

(f) quieting title to real property;

(g) acquiring ownership or use by a public utility;

(h) facilitating the disposal or exchange of Federal property; or

(i) meeting military, law enforcement, public safety, public transportation, or public health emergencies.

Sec. 4. *General Provisions.* (a) This order shall be implemented consistent with applicable law and subject to the availability of appropriations.

(b) Nothing in this order shall be construed to impair or otherwise affect:

(i) authority granted by law to a department or agency or the head thereof; or

(ii) functions of the Director of the Office of Management and Budget relating to budget, administrative, or legislative proposals.

(c) This order shall be implemented in a manner consistent with Executive Order 12630 of March 15, 1988.

(d) This order is not intended to, and does not, create any right or benefit, substantive or procedural, enforceable at law or in equity against the United States, its departments, agencies, entities, officers, employees, or agents, or any other person.

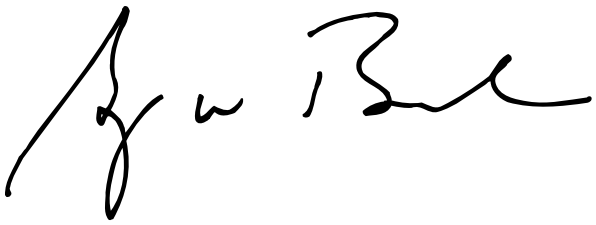

THE WHITE HOUSE,
June 23, 2006.

[FR Doc. 06–5828
Filed 6–27–06; 8:45 am]
Billing code 3195–01–P

Presidential Documents

Executive Order 13407 of June 26, 2006

Public Alert and Warning System

By the authority vested in me as President by the Constitution and the laws of the United States of America, including the Robert T. Stafford Disaster Relief and Emergency Assistance Act, as amended (42 U.S.C. 5121 *et seq.*), and the Homeland Security Act of 2002, as amended (6 U.S.C. 101 *et seq.*), it is hereby ordered as follows:

Section 1. *Policy.* It is the policy of the United States to have an effective, reliable, integrated, flexible, and comprehensive system to alert and warn the American people in situations of war, terrorist attack, natural disaster, or other hazards to public safety and well-being (public alert and warning system), taking appropriate account of the functions, capabilities, and needs of the private sector and of all levels of government in our Federal system, and to ensure that under all conditions the President can communicate with the American people.

Sec. 2. *Functions of the Secretary of Homeland Security.*

(a) To implement the policy set forth in section 1 of this order, the Secretary of Homeland Security shall:

(i) inventory, evaluate, and assess the capabilities and integration with the public alert and warning system of Federal, State, territorial, tribal, and local public alert and warning resources;

(ii) establish or adopt, as appropriate, common alerting and warning protocols, standards, terminology, and operating procedures for the public alert and warning system to enable interoperability and the secure delivery of coordinated messages to the American people through as many communication pathways as practicable, taking account of Federal Communications Commission rules as provided by law;

(iii) ensure the capability to adapt the distribution and content of communications on the basis of geographic location, risks, or personal user preferences, as appropriate;

(iv) include in the public alert and warning system the capability to alert and warn all Americans, including those with disabilities and those without an understanding of the English language;

(v) through cooperation with the owners and operators of communication facilities, maintain, protect, and, if necessary, restore communications facilities and capabilities necessary for the public alert and warning system;

(vi) ensure the conduct of training, tests, and exercises for the public alert and warning system;

(vii) ensure the conduct of public education efforts so that State, territorial, tribal, and local governments, the private sector, and the American people understand the functions of the public alert and warning system and how to access, use, and respond to information from the public alert and warning system;

(viii) consult, coordinate, and cooperate with the private sector, including communications media organizations, and Federal, State, territorial, tribal, and local governmental authorities, including emergency response providers, as appropriate;

(ix) administer the Emergency Alert System (EAS) as a critical component of the public alert and warning system; and

(x) ensure that under all conditions the President of the United States can alert and warn the American people.

(b) In performing the functions set forth in subsection (a) of this section, the Secretary of Homeland Security shall coordinate with the Secretary of Commerce, the heads of other departments and agencies of the executive branch (agencies), and other officers of the United States, as appropriate, and the Federal Communications Commission.

(c) The Secretary of Homeland Security may issue guidance to implement this order.

Sec. 3. *Duties of Heads of Departments and Agencies.*

(a) The heads of agencies shall provide such assistance and information as the Secretary of Homeland Security may request to implement this order.

(b) In addition to performing the duties specified under subsection (a) of this section:

(i) the Secretary of Commerce shall make available to the Secretary of Homeland Security, to assist in implementing this order, the capabilities and expertise of the Department of Commerce relating to standards, technology, telecommunications, dissemination systems, and weather;

(ii) the Secretary of Defense shall provide to the Secretary of Homeland Security requirements for the public alert and warning system necessary to ensure proper coordination of the functions of the Department of Defense with the use of such system;

(iii) the Federal Communications Commission shall, as provided by law, adopt rules to ensure that communications systems have the capacity to transmit alerts and warnings to the public as part of the public alert and warning system; and

(iv) the heads of agencies with capabilities for public alert and warning shall comply with guidance issued by the Secretary of Homeland Security under subsection 2(c) of this order, and shall develop and maintain such capabilities in a manner consistent and interoperable with the public alert and warning system.

Sec. 4. *Reports on Implementation.* Not later than 90 days after the date of this order, the Secretary of Homeland Security shall submit to the President, through the Assistant to the President for Homeland Security and Counterterrorism, a plan for the implementation of this order, and shall thereafter submit reports from time to time, and not less often than once each year, on such implementation, together with any recommendations the Secretary finds appropriate.

Sec. 5. *Amendment, Revocation, and Transition.*

(a) Section 3(b)(4) of Executive Order 12472 of April 3, 1984, as amended, is further amended by striking ''Emergency Broadcast System'' and inserting in lieu thereof ''Emergency Alert System''.

(b) Not later than 120 days after the date of this order, the Secretary of Homeland Security, after consultation with the Assistant to the President for Homeland Security and Counterterrorism, shall issue guidance under section 2(c) of this order that shall address the subject matter of the presidential memorandum of September 15, 1995, for the Director, Federal Emergency Management Agency, on Presidential Communications with the General Public During Periods of National Emergency, and upon issuance of such guidance such memorandum is revoked.

(c) The Secretary of Homeland Security shall ensure an orderly and effective transition, without loss of capability, from alert and warning systems available as of the date of this order to the public alert and warning system for which this order provides.

Sec. 6. *General Provisions.* (a) This order shall be implemented in a manner consistent with:

(i) applicable law and presidential guidance, including Executive Order 12472 of April 3, 1984, as amended, and subject to the availability of appropriations; and

(ii) the authorities of agencies, or heads of agencies, vested by law.

(b) This order shall not be construed to impair or otherwise affect the functions of the Director of the Office of Management and Budget relating to budget, administrative, and legislative proposals.

(c) This order is not intended to, and does not, create any rights or benefits, substantive or procedural, enforceable at law or in equity by a party against the United States, its agencies, instrumentalities, or entities, its officers, employees, or agents, or any other person.

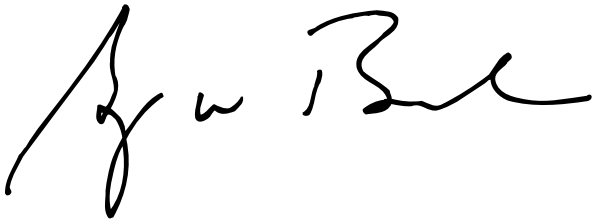

THE WHITE HOUSE,
June 26, 2006.

[FR Doc. 06–5829
Filed 6–27–06; 8:45 am]
Billing code 3195–01–P

Reader Aids

Federal Register

Vol. 71, No. 124

Wednesday, June 28, 2006

CUSTOMER SERVICE AND INFORMATION

Federal Register/Code of Federal Regulations	
General Information, indexes and other finding aids	**202–741–6000**
Laws	**741–6000**
Presidential Documents	
Executive orders and proclamations	**741–6000**
The United States Government Manual	**741–6000**
Other Services	
Electronic and on-line services (voice)	**741–6020**
Privacy Act Compilation	**741–6064**
Public Laws Update Service (numbers, dates, etc.)	**741–6043**
TTY for the deaf-and-hard-of-hearing	**741–6086**

ELECTRONIC RESEARCH

World Wide Web

Full text of the daily Federal Register, CFR and other publications is located at: **http://www.gpoaccess.gov/nara/index.html**

Federal Register information and research tools, including Public Inspection List, indexes, and links to GPO Access are located at: **http://www.archives. gov/federal__register/**

E-mail

FEDREGTOC-L (Federal Register Table of Contents LISTSERV) is an open e-mail service that provides subscribers with a digital form of the Federal Register Table of Contents. The digital form of the Federal Register Table of Contents includes HTML and PDF links to the full text of each document.

To join or leave, go to **http://listserv.access.gpo.gov** and select *Online mailing list archives, FEDREGTOC-L, Join or leave the list (or change settings);* then follow the instructions.

PENS (Public Law Electronic Notification Service) is an e-mail service that notifies subscribers of recently enacted laws.

To subscribe, go to **http://listserv.gsa.gov/archives/publaws-l.html** and select *Join or leave the list (or change settings);* then follow the instructions.

FEDREGTOC-L and **PENS** are mailing lists only. We cannot respond to specific inquiries.

Reference questions. Send questions and comments about the Federal Register system to: **fedreg.infonara.gov**

The Federal Register staff cannot interpret specific documents or regulations.

FEDERAL REGISTER PAGES AND DATE, JUNE

31069–31914 1
31915–32264 2
32265–32414 5
32415–32800 6
32801–33146 7
33147–33374 8
33375–33592 9
33593–33988 12
33989–34230 13
34231–34506 14
34507–34786 15
34787–35142 16
35143–35372 19
35373–35490 20
35491–35770 21
35771–35994 22
35995–36184 23
36185–36476 26
36477–36660 27
36661–36978 28

CFR PARTS AFFECTED DURING JUNE

At the end of each month, the Office of the Federal Register publishes separately a List of CFR Sections Affected (LSA), which lists parts and sections affected by documents published since the revision date of each title.

3 CFR

Proclamations:
8026 32799
8027 32801
8028 33373
8029 33589
8030 33591
8031 36443

Executive Orders:
12472 (Amended by 13407) 36975
12630 (See 13406) 36973
13159 (See Notice of June 19, 2006) 35489
13219 (See Notice of June 22, 2006) 36183
13222 (See Memorandum of May 12, 2006) 31909
13304 (See Notice of June 22, 2006) 36183
13404 33593
13405 35485
13406 36973
13407 36975

Administrative Orders:
Memorandums:
Memorandum of May 12, 2006 31909
Memorandum of May 18, 2006 35769
Memorandum of May 25, 2006 36433
Memorandum of May 26, 2006 36435
Memorandum of Sept. 15, 1995 (Provisionally revoked by EO 13407) 36975
Presidential Determinations:
No. 2006–15 of June 15, 2006 ..... 36437, 36477
No. 2006–16 of June 19, 2006 ..... 36439, 36479
Notices:
Notice of June 19, 2006 35489
Notice of June 22, 2006 36183

5 CFR

211 33375
532 35373
1201 34231

Proposed Rules:
451 35561
890 ..... 34849, 35397

6 CFR

25 33147

7 CFR

2 35491
205 32803
272 33376
273 33376
301 ..... 33168, 35491
319 ..... 33172, 35378
360 35378
361 35378
923 35143
932 35493
955 34507
979 33178
1210 34232
1216 35145
1410 31915
1421 ..... 32415, 35147
1423 35771
1427 32415
1980 33181
4279 33181

Proposed Rules:
250 33344
305 36220
319 36220
930 35562
983 35201
1000 36715
1001 36715
1005 36715
1006 36715
1007 36715
1030 36715
1032 36715
1033 36715
1124 36715
1126 36715
1131 36715
3411 32479

8 CFR

204 35732
205 35732
213A 35732
274a 34510
299 35732
1205 35732
1240 35732

Proposed Rules:
274a 34281

9 CFR

93 ..... 31069, 34517
94 31069

Proposed Rules:
94 34537
145 35203
147 35203
160 31109
161 31109
162 31109

10 CFR

72 35147
73 33989
110 35995
170 33190
171 33190
440 35775
851 36661

Proposed Rules:

20 34024
32 34024
35 34285
431 36715
440 35836
451 36224
490 36034

11 CFR

109 33190

12 CFR

229 32265
701 ....36661, 36667
741 36661
900 35495
914 35495
915 35495
925 35495
950 35495
955 35495

Proposed Rules:

219 35564
327 ....36717, 36718
611 34549
612 34549
613 34549
614 34549
708a 36946
740 36719
748 36720
1732 31121
1750 36230

13 CFR

Proposed Rules:

121 34550
125 34550
127 34550

14 CFR

23 ....34235, 34237, 34517, 34787, 34789, 35148, 35500
39 ....31070, 31918, 32266, 32268, 32427, 32434, 32807, 32811, 32815, 32818, 33595, 33598, 33600, 33602, 33604, 33606, 33608, 33611, 33614, 33992, 33994, 34000, 34003, 34004, 34006, 34790, 34793, 34801, 34804, 34807, 34808, 34811, 34814, 34817, 35381, 35383, 35385, 35502, 35505, 35507, 35509, 35778, 35781, 35783, 35785, 35788, 35789, 36185, 36187, 36481, 36671, 36674
61 35760
63 35760
65 35760
67 35760
71 ....31919, 31920, 32270, 32271, 32822, 32823, 32824, 32825, 32826, 35150, 35151, 35152, 36189, 36190
91 35760
97 ....34243, 34245, 36674
121 ....31921, 35760
135 35760

Proposed Rules:

23 ....34288, 34292, 36040
25 35567
39 ....31978, 31980, 32484, 32487, 32489, 32491, 32492, 32873, 33260, 33262, 33264, 33267, 33270, 33412, 33658, 33661, 33663, 34025, 34026, 34563, 34852, 35220, 35223, 35398, 35400, 35572, 35575, 35578, 35581, 35836, 35840, 35843, 36251, 36254, 36493, 36495, 36723
71 ....31983, 32876, 33665, 33666, 33667, 34296, 34854, 35225, 36256, 36724, 36725
77 34028
91 ....32877, 34856
121 ....32877, 34856
125 ....32877, 34856
135 ....32877, 34856

15 CFR

4 31073
736 ....32272, 33211
738 33614
742 33614
744 ....32272, 33211
745 33614
756 34008
774 ....33614, 35989
806 35388
902 33211

16 CFR

410 34247
803 35995

Proposed Rules:

18 34045
305 35584
437 31124
Ch. II 32882

17 CFR

200 ....33384, 35730
239 36640
270 36640
274 36640

Proposed Rules:

270 35366

18 CFR

284 36612

Proposed Rules:

35 ....32636, 33102
37 32636
50 36257
157 36275
260 35226
366 31125
367 31125
368 31125
369 31125
375 31125
380 36257

19 CFR

101 33235
141 31921
142 31921

Proposed Rules:

12 31125
358 35846

20 CFR

601 35511
602 35511
603 35511
606 35511
609 35511
614 35511
615 35511
616 35511
617 35511
625 35511
640 35511
641 35511
650 35511
651 35511
653 35511
654 35511
655 35511
656 35511
658 35511
661 35511
662 35511
667 35511
668 35511

Proposed Rules:

401 32494
402 32494

21 CFR

50 32827
73 31927
203 34249
520 ....33236, 33237, 36483
522 32436
558 ....31073, 34519, 35792
874 32832

22 CFR

40 34519
41 34519
42 34519
62 33237

Proposed Rules:

42 35847
97 34857

23 CFR

Proposed Rules:

450 33510
500 33510
665 34297

24 CFR

115 33138
203 ....33138, 35992
320 32388

Proposed Rules:

81 33144
203 ....32392, 35370
291 32392
3282 34464
3286 34476

25 CFR

Proposed Rules:

502 33668
546 33668

26 CFR

1 ....31074, 31268, 32437, 33239, 34009, 35524, 36676
31 35153
602 ....31268, 34009, 35524

Proposed Rules:

1 ....31128, 31985, 32495, 33273, 34046, 34047, 35592

27 CFR

9 ....33239, 34522, 34525, 34527

28 CFR

0 36192
524 36007

Proposed Rules:

16 36293

29 CFR

458 31929
1910 36008
1915 36008
1926 36008
4000 31077
4006 31077
4007 31077
4022 34532
4044 34532
4062 34819
4063 34819

30 CFR

57 ....33387, 36483
925 33243
943 34251
944 33249

Proposed Rules:

924 33273
948 31996

31 CFR

Proposed Rules:

103 35564

32 CFR

199 ....31942, 31943, 35389, 35527
216 31082
706 36193

Proposed Rules:

199 35402

33 CFR

100 32836
117 ....35391, 36010, 36194
165 ....31085, 31088, 31945, 32838, 32839, 33622, 34255, 34822, 35393, 35537, 35539, 35794, 35796, 35798, 35800, 36012, 36196, 36198, 36200, 36202, 36204, 36206, 36208, 36484

Proposed Rules:

100 35404
117 ....32883, 35852, 36294, 36296
165 ....31999, 32002, 32004, 35230, 35854

34 CFR

304 32396

36 CFR

223 34823
242 35541
1151 33254
1253 35395

Proposed Rules:

Ch. I 36297

37 CFR

201 ..... 31089, 36486
202 31089
212 31089

Proposed Rules:

1 32285
41 32285

39 CFR

Proposed Rules:

501 36498

40 CFR

9 35006
26 36172
51 31092
52 ..... 31093, 31097, 32274, 32448, 33622, 33625, 34011, 34014, 34257, 34259, 35157, 35159, 35161, 35163, 35801, 35804, 36210, 36213, 36486
55 35804
60 ..... 31100, 33388
61 32276
63 ..... 36014, 36678
69 32450
80 31947
81 ..... 35159, 35161, 35163
82 32840
93 31092
122 ..... 33628, 35006
123 35006
124 35006
125 35006
150 35543
152 35543
154 35543
155 34262
158 35543
159 35543
168 35543
170 35543
172 35543
174 35543
178 35543
180 ..... 31102, 32841, 32846, 32849, 34263, 34267, 35543, 36014, 36687
261 35395
262 35547
271 36216
300 ..... 35810, 35813, 36015, 36019
372 32464
704 33640
707 33640
717 33640
720 33640
721 ..... 33640, 34015
723 33640
761 33630
790 33640
799 33640
1051 35004

Proposed Rules:

26 36177
52 ..... 31129, 32291, 33413, 33668, 33669, 34050, 34297, 34864, 35233, 35856, 35857, 36297, 36298
60 ..... 32885, 33804, 36394, 36726
63 ..... 33804, 34422, 36394, 36730
70 32006
71 32006
80 ..... 32015, 36042
81 35233
85 ..... 33804, 36394
90 ..... 33804, 36394
122 32887
180 ..... 32895, 32899, 33416, 36731
262 35593
300 ..... 35857, 35858, 36048, 36736
1048 ..... 33804, 36394
1065 ..... 33804, 36394
1068 ..... 33804, 36394

42 CFR

423 36020

Proposed Rules:

100 33420

44 CFR

64 ..... 33642, 35174
65 ..... 33644, 35175
67 ..... 33645, 33646, 35176

Proposed Rules:

67 ..... 33672, 33702, 35233, 35235, 35240

46 CFR

1 35816

47 CFR

1 34272
2 35550
25 ..... 35178, 35550
27 ..... 34420, 35178
64 ..... 35553, 36690
73 ..... 32853, 32854, 34279, 35556, 35557, 36693
87 35550

Proposed Rules:

1 35594
64 31131
73 ..... 32909, 34298, 36741

48 CFR

Ch. 1 ..... 36922, 36941
2 36923
4 ..... 36923, 36930
8 36941
10 36925
15 36927
19 36925
22 36930
25 36935
31 36939
33 36941
47 36930
52 ..... 36923, 36930, 36935, 36941
53 36930
212 34826
219 34831
225 ..... 34826, 34832
237 34833
252 ..... 34826, 34834
601 34836
611 34836
619 34836
622 34836
628 34836
652 34836
1532 32282
1552 32282

Proposed Rules:

213 34867
233 34867

49 CFR

1 35558
107 33858
171 ..... 32244, 33858
172 ..... 32244, 33858
173 ..... 32244, 33858
175 32244
178 33858
180 33858
192 33402
193 33402
195 33402
229 36888
238 36888
393 35819
571 ..... 32855, 35558
575 35558
582 35558
1544 31964
1546 31964
1548 ..... 31964, 33254

Proposed Rules:

173 32909
572 34868
604 32496
613 33510
655 32298

50 CFR

17 35195
36 33255
100 35541
222 36024
223 ..... 31965, 36024
622 ..... 34534, 35198
648 ..... 33211, 34842, 35199, 35835
660 31104
679 ..... 31105, 34021, 34022, 35835, 36489, 36694
680 32862

Proposed Rules:

10 36742
13 36742
17 ..... 31137, 32496, 32746, 33703, 34196, 34566, 35048, 35406, 36742, 36743, 36745
21 35599
22 35599
23 36742
224 36298
226 34571
229 34299
622 33423
648 ..... 33721, 35600
660 ..... 33432, 36506
665 ..... 32911, 36049
679 ..... 33040, 35859

REMINDERS

The items in this list were editorially compiled as an aid to Federal Register users. Inclusion or exclusion from this list has no legal significance.

RULES GOING INTO EFFECT JUNE 28, 2006

DEFENSE DEPARTMENT

Federal Acquisition Regulation (FAR):
- Free trade agreements—
  - El Salvador, Honduras, and Nicaragua; published 6-28-06
- Technical amendments; published 6-28-06
- Wage Determinations OnLine; implementation; published 6-28-06

ENERGY DEPARTMENT

Worker Safety and Health Program; chronic beryllium disease prevention
- Correction; published 6-28-06

ENVIRONMENTAL PROTECTION AGENCY

Air pollution control; new motor vehicles and engines:
- Tier 2 motor vehicles; light-duty diesel emissions; published 3-30-06

Pesticides; emergency exemptions, etc.:
- Myclobutanil; published 6-28-06

GENERAL SERVICES ADMINISTRATION

Federal Acquisition Regulation (FAR):
- Technical amendments; published 6-28-06
- Wage Determinations OnLine; implementation; published 6-28-06

LABOR DEPARTMENT

Mine Safety and Health Administration

Education and training:
- Shaft and slope construction mine workers; training standards; published 12-30-05

NATIONAL AERONAUTICS AND SPACE ADMINISTRATION

Federal Acquisition Regulation (FAR):
- Free trade aggreements—
  - El Salvador, Honduras, and Nicaragua; published 6-28-06
- Technical amendments; published 6-28-06
- Wage Determinations OnLine; implementation; published 6-28-06

TRANSPORTATION DEPARTMENT

Federal Aviation Administration

Standard instrument approach procedures; published 6-28-06

COMMENTS DUE NEXT WEEK

AGRICULTURE DEPARTMENT

Commodity Credit Corporation

Export programs:
- Commodities procurement for foreign donation; Open for comments until further notice; published 12-16-05 [FR E5-07460]

AGRICULTURE DEPARTMENT

Food Safety and Inspection Service

Meat and poultry inspection:
- Hazard analysis and critical control point (HACCP) system—
  - Ingredients of potential public health concern; proper use; comments due by 7-7-06; published 5-8-06 [FR E6-06743]

COMMERCE DEPARTMENT

Freedom of Information Act; implementation; comments due by 7-3-06; published 6-1-06 [FR E6-08479]

COMMERCE DEPARTMENT

National Oceanic and Atmospheric Administration

Endangered and threatened species:
- Status review—
  - North American green sturgeon; southern distinct population; comments due by 7-5-06; published 4-7-06 [FR 06-03326]

Fishery conservation and management:
- Caribbean, Gulf, and South Atlantic fisheries—
  - Gulf of Mexico reef fish; comments due by 7-3-06; published 5-18-06 [FR E6-07587]
- Northeastern United States fisheries—
  - Northeast multispecies; comments due by 7-6-06; published 6-21-06 [FR 06-05537]

COMMERCE DEPARTMENT

Patent and Trademark Office

Patent cases:
- Fee revisions (2007 FY); comments due by 7-5-06; published 6-5-06 [FR E6-08682]

ENVIRONMENTAL PROTECTION AGENCY

Air pollution; standards of performance for new stationary sources:
- Alternative work practice to detect leaks from equipment; comments due by 7-5-06; published 6-7-06 [FR E6-08813]

Air programs:
- Fuels and fuel additives—
  - Downstream oxygenate blending and pipeline interface; refiner and importer quality assurance requirements; comments due by 7-3-06; published 6-2-06 [FR 06-05050]
  - Downstream oxygenate blending and pipeline interface; refiner and importer quality assurance requirements; comments due by 7-3-06; published 6-2-06 [FR 06-05051]

Air quality implementation plans; approval and promulgation; various States:
- Missouri; comments due by 7-5-06; published 6-5-06 [FR E6-08661]
- Ohio; comments due by 7-3-06; published 6-1-06 [FR 06-05013]

Pesticide programs:
- Tolerance reassessment decisions—
  - Inert ingredients; comments due by 7-3-06; published 5-3-06 [FR 06-04154]

Pesticides; emergency exemptions, etc.:
- Dimethenamid-p; comments due by 7-3-06; published 5-3-06 [FR 06-04161]

Pesticides; tolerances in food, animal feeds, and raw agricultural commodities:
- Azoxystrobin; comments due by 7-3-06; published 5-3-06 [FR 06-04157]
- Boscalid; comments due by 7-3-06; published 5-3-06 [FR 06-04158]
- Ethylene glycol monomethyl ether and methylene blue; comments due by 7-3-06; published 5-3-06 [FR E6-06671]
- Flumioxazin; comments due by 7-3-06; published 5-3-06 [FR 06-04159]
- Fomesafen; comments due by 7-3-06; published 5-3-06 [FR 06-04160]
- Glufosinate ammonium; comments due by 7-3-06; published 5-3-06 [FR 06-04162]
- Inert ingredient with insufficient data for reassessment; tolerance exemption revocation; comments due by 7-7-06; published 6-7-06 [FR E6-08826]

FEDERAL COMMUNICATIONS COMMISSION

Common carrier services:
- Individuals with hearing and speech disabilities—
  - Telecommunications relay services and speech-to-speech services; misuse of internet protocol and video relay services; comments due by 7-3-06; published 6-1-06 [FR E6-08489]

Radio stations; table of assignments:
- New York; comments due by 7-3-06; published 5-31-06 [FR E6-08378]

HEALTH AND HUMAN SERVICES DEPARTMENT

Centers for Medicare & Medicaid Services

Medicare:
- Inpatient rehabilitation facility prospective payment system (2007 FY); comments due by 7-7-06; published 5-15-06 [FR 06-04409]

HEALTH AND HUMAN SERVICES DEPARTMENT

Food and Drug Administration

Color additives:
- Mica-based pearlescent pigments; comments due by 7-3-06; published 6-2-06 [FR E6-08575]

Medical devices:
- General and plastic surgery devices—
  - Topical oxygen chamber for extremities; reclassification; comments due by 7-5-06; published 4-6-06 [FR E6-04962]

HOMELAND SECURITY DEPARTMENT

Coast Guard

Drawbridge operations:
- Louisiana; comments due by 7-3-06; published 5-4-06 [FR E6-06738]

Ports and waterways safety; regulated navigation areas, safety zones, security zones, etc.:
- Port Valdez and Valdez Narrows, Valdez, AK;

comments due by 7-3-06; published 6-2-06 [FR E6-08544]

Transportation Worker Identification Credential Program; maritime sector implementation:

Commercial driver's license hazardous materials endorsement; comments due by 7-6-06; published 5-22-06 [FR 06-04508]

Merchant mariner qualification credentials consolidation; comments due by 7-6-06; published 5-22-06 [FR 06-04509]

HOMELAND SECURITY DEPARTMENT

Transportation Security Administration

Transportation Worker Identification Credential Program; maritime sector implementation:

Commercial driver's license hazardous materials endorsement; comments due by 7-6-06; published 5-22-06 [FR 06-04508]

INTERIOR DEPARTMENT

Fish and Wildlife Service

Endangered and threatened species:

Critical habitat designations—

Spikedace and loach minnow; comments due by 7-6-06; published 6-6-06 [FR E6-08645]

Willowy monardella; comments due by 7-3-06; published 6-1-06 [FR E6-08459]

INTERIOR DEPARTMENT

Surface Mining Reclamation and Enforcement Office

Permanent program and abandoned mine land reclamation plan submissions:

West Virginia; comments due by 7-3-06; published 6-2-06 [FR E6-08620]

NUCLEAR REGULATORY COMMISSION

National Source Tracking System; manufacture, transfer, receipt, or disposal of nationally tracked sealed sources; establishment; comments due by 7-3-06; published 6-13-06 [FR E6-09179]

TRANSPORTATION DEPARTMENT

Air carrier control:

Fitness review policies; comments due by 7-5-06; published 5-5-06 [FR 06-04227]

TRANSPORTATION DEPARTMENT

Federal Aviation Administration

Air carrier certification and operations:

Turbojet operators; landing performance assessments

Correction; comments due by 7-3-06; published 6-16-06 [FR 06-05449]

Airworthiness directives:

Boeing; comments due by 7-3-06; published 6-7-06 [FR E6-08823]

Eurocopter Canada Ltd.; comments due by 7-3-06; published 5-2-06 [FR E6-06589]

Airworthiness Directives:

Eurocopter France; comments due by 7-3-06; published 5-2-06 [FR 06-04107]

Airworthiness directives:

Eurocopter France; comments due by 7-3-06; published 5-3-06 [FR 06-04108]

McDonnell Douglas; comments due by 7-3-06; published 5-17-06 [FR E6-07476]

Rolls-Royce Deutschland Ltd & Co.; comments due by 7-3-06; published 5-4-06 [FR E6-06737]

Sikorsky; comments due by 7-3-06; published 5-2-06 [FR E6-06586]

Class E airspace; comments due by 7-7-06; published 6-7-06 [FR 06-05183]

TRANSPORTATION DEPARTMENT

National Highway Traffic Safety Administration

Motor vehicle theft prevention standards:

Passenger motor vehicle theft data (2004 CY); comments due by 7-3-06; published 5-2-06 [FR 06-04137]

TREASURY DEPARTMENT

Internal Revenue Service

Income taxes:

Designated Roth accounts

Hearing; comments due by 7-5-06; published 6-8-06 [FR E6-08885]

TREASURY DEPARTMENT

Alcohol and Tobacco Tax and Trade Bureau

Alcohol; viticultural area designations:

Green Valley of Russian River Valley, Sonoma County, CA; name change; comments due by 7-3-06; published 5-2-06 [FR E6-06538]

LIST OF PUBLIC LAWS

This is a continuing list of public bills from the current session of Congress which have become Federal laws. It may be used in conjunction with "P L U S" (Public Laws Update Service) on 202–741–6043. This list is also available online at *http://www.archives.gov/federal-register/laws.html*.

The text of laws is not published in the **Federal Register** but may be ordered in "slip law" (individual pamphlet) form from the Superintendent of Documents, U.S. Government Printing Office, Washington, DC 20402 (phone, 202–512–1808). The text will also be made available on the Internet from GPO Access at *http://www.gpoaccess.gov/plaws/index.html*. Some laws may not yet be available.

S. 1445/P.L. 109–237

To designate the facility of the United States Postal Service located at 520 Colorado Avenue in Arriba, Colorado, as the "William H. Emery Post Office". (June 23, 2006; 120 Stat. 506)

Last List June 19, 2006

Public Laws Electronic Notification Service (PENS)

PENS is a free electronic mail notification service of newly enacted public laws. To subscribe, go to *http://listserv.gsa.gov/archives/publaws-l.html*

Note: This service is strictly for E-mail notification of new laws. The text of laws is not available through this service. **PENS** cannot respond to specific inquiries sent to this address.