Federal Register

Thursday,
December 14, 2006

Part II

Department of Transportation

National Highway Traffic Safety Administration

49 CFR Part 572

Anthropomorphic Test Devices; ES–2re Side Impact Crash Test Dummy 50th Percentile Adult Male and SID–IIs Side Impact Crash Test Dummy 5th Percentile Adult Female; Final Rules

DEPARTMENT OF TRANSPORTATION

National Highway Traffic Safety Administration

49 CFR Part 572

Docket No. NHTSA–2004–25441

RIN 2127–AI89

Anthropomorphic Test Devices; ES–2re Side Impact Crash Test Dummy 50th Percentile Adult Male

AGENCY: National Highway Traffic Safety Administration (NHTSA), Department of Transportation (DOT).

ACTION: Final rule.

SUMMARY: This final rule amends the agency's regulation on anthropomorphic test devices to add specifications and qualification requirements for a new mid-size adult male crash test dummy, called the ''ES–2re'' test dummy. The ES–2re dummy has enhanced injury assessment capabilities compared to devices existing today, which allows for a fuller assessment of the types and magnitudes of the injuries occurring in side impacts and of the efficacy of countermeasures in improving occupant protection. The agency plans to use the ES–2re dummy in an upgraded Federal Motor Vehicle Safety Standard on side impact protection.

DATES: This final rule is effective June 12, 2007. The incorporation by reference of certain publications listed in the regulations is approved by the Director of the Federal Register as of June 12, 2007. If you wish to petition for reconsideration of this rule, your petition must be received by January 29, 2007.

ADDRESSES: If you wish to petition for reconsideration of this rule, you should refer in your petition to the docket number of this document and submit your petition to: Administrator, Room 5220, National Highway Traffic Safety Administration, 400 Seventh Street, SW., Washington, DC 20590.

The petition will be placed in the docket. Anyone is able to search the electronic form of all documents received into any of our dockets by the name of the individual submitting the comment (or signing the comment, if submitted on behalf of an association, business, labor union, etc.). You may review DOT's complete Privacy Act Statement in the **Federal Register** published on April 11, 2000 (Volume 65, Number 70; Pages 19477–78) or you may visit *http://dms.dot.gov.*

FOR FURTHER INFORMATION CONTACT: For non-legal issues, you may call Stan Backaitis, NHTSA Office of Crashworthiness Standards (telephone 202–366–4912). For legal issues, you may call Deirdre Fujita, NHTSA Office of Chief Counsel (telephone 202–366–2992) (fax 202–366–3820). You may send mail to these officials at the National Highway Traffic Safety Administration, 400 Seventh St., SW., Washington, DC 20590.

SUPPLEMENTARY INFORMATION:

Table of Contents

I. The ES–2re Dummy Generally Described
a. Development of the Rib Extensions
b. The Reference Materials for the Dummy
II. Notice of Proposed Rulemaking (NPRM)
III. Overview of Comments
IV. Response to the Comments
a. Biofidelity
1. ISO Technical Report 9790 Methodology
2. NHTSA Biofidelity Ranking System
b. Other Issues Relating to How Humanlike the Dummy Is
1. Anthropometry of Abdominal and Pelvic Regions
2. Sitting Height
3. ES–2re's Representation of Large Male Population
4. Abdominal Instrumentation
5. Shoulder Design
6. Rib Deflections
7. Rib Extensions
c. Repeatability and Reproducibility
1. Sample Size
2. Reproducibility of Pelvic Load Measurements
3. Sensitivity to Initial Conditions
4. Rib Acceleration Response
d. Directional Impact Sensitivity
1. Impact Direction
2. Rib Binding in ISO 9790 Tests
3. ISO 9790 Ratings for Lateral and Oblique Impacts
e. Durability
f. Symmetry
g. Using the ES–2 Test Dummy
h. Test Dummy Drawing Package
1. 3-D Shape Definitions
2. Material Specifications
3. Dummy Drawing Changes
i. Certification Procedures and Response Corridors
1. Overview of the Comments
2. Head Drop Test
3. Neck Flexion Test
i. Neck Response Corridors
ii. Neck Pendulum Aluminum Honeycomb
iii. Neck Pendulum Deceleration Filter Class
iv. Nodding Block Configuration
v. Adjusting Half-Spherical Neck Screws
4. Thorax
i. Full-Body Systems Test
ii. Specifying Impact Speed in Rib Module Drop Test
iii. Recovery Time Between Successive Tests
5. Lumbar Spine
i. Response Corridors
ii. Lumbar Cable Nut Adjustment
6. Shoulder
i. Shoulder Cord Tension
ii. Pendulum Configuration
7. Abdomen
8. Pelvis
9. Other Issues
i. Test Probe Suspension Cables and Attachments
ii. Pelvis and Abdomen Pendulum Filter Requirements
iii. Temperature
V. NHTSA Crash Test Experience
a. MDB Tests
b. Oblique Pole Tests
c. Rib Responses
d. Torso Back Plate Responses
e. Durability
VI. Conclusions
Rulemaking Analyses and Notices
Appendix A to Final Rule Preamble: Specific Drawing Comments and Agency Responses to Those Comments

NHTSA published a notice of proposed rulemaking (NPRM) that proposed to upgrade Federal Motor Vehicle Safety Standard (FMVSS) No. 214, ''Side Impact Protection'' (49 CFR 571.214) by, among other things, adopting a dynamic pole test into the standard (May 17, 2004; 69 FR 27990; Docket 17694; reopening of comment period, January 12, 2005, 70 FR 2105). The proposed pole test is similar to, but more demanding than, the one currently used optionally in FMVSS No. 201, ''Occupant Protection in Interior Impact'' (49 CFR 571.201). In the proposed pole test, a vehicle is propelled sideways into a rigid pole at an angle of 75 degrees, at any speed up to 32 km/h (20 mph). The NPRM proposed that compliance with the pole test would be determined in two test configurations, one using a test dummy representing mid-size adult males and the other using a test dummy representing small adult females. The NPRM proposed to require vehicles to protect against head, thoracic and other injuries as measured by the two test dummies. The agency also proposed using the dummies in FMVSS No. 214's existing moving deformable barrier (MDB) test, which simulates a vehicle-to-vehicle ''T-bone'' type intersection crash.[1]

[1] On August 10, 2005, the President signed the ''Safe, Accountable, Flexible, Efficient Transportation Equity Act: A Legacy for Users,'' (SAFETEA–LU), Pub. L. 109–59 (Aug. 10, 2005; 119 Stat. 1144), to authorize funds for Federal-aid highways, highway safety programs, and transit programs, and for other purposes. Section 10302(a) of SAFETEA–LU provides:

Sec. 10302. Side-Impact Crash Protection Rulemaking.

(a) Rulemaking.—The Secretary shall complete a rulemaking proceeding under chapter 301 of title 49, United States Code, to establish a standard designed to enhance passenger motor vehicle occupant protection, in all seating positions, in side impact crashes. The Secretary shall issue a final rule by July 1, 2008.

At the time of the enactment of § 10302(a), the agency's notice of proposed rulemaking to upgrade FMVSS No. 214 was pending. The final rule

This document establishes the specifications and qualification requirements for the new mid-size adult male crash test dummy, called the ''ES–2re'' test dummy, for use in FMVSS No. 214. The NPRM preceding this Part 572 final rule on the ES–2re dummy was published on September 15, 2004 (69 FR 55550; Docket 18864; reopening of comment period, January 12, 2005, 70 FR 2105).[2]

I. The ES–2re Dummy Generally Described

The ES–2re can be instrumented with a wide array of sensors to better predict a wider range of injury potential than any other currently available mid-size male side impact test dummy. The ES–2re is technically superior to both the SID–H3 50th percentile male test dummy (49 CFR Part 572, subpart M) currently used in the optional pole test of FMVSS No. 201 and the SID 50th percentile adult male test dummy (49 CFR Part 572, subpart F) now used in the MDB test of FMVSS No. 214. It can assess the potential for head, neck, thoracic, abdominal, pelvic, and other injuries. It can assess the potential for head injury (measuring the resultant head acceleration, which is used to calculate the Head Injury Criterion (HIC)); thoracic injuries in terms of spine and rib accelerations and rib deflections (chest deflection has been shown to be the best predictor of thoracic injuries in low-speed side impacts); abdominal injuries through three load cells to assess the magnitude of lateral and oblique forces; and pelvic injuries.[3]

Its improved biofidelity and enhanced injury assessment capability allows for a fuller assessment of the types and magnitudes of the injuries occurring in side impacts and a more penetrating evaluation of the efficacy of vehicle countermeasures installed to improve side impact protection than now possible using other existing side impact dummies. In the May 17, 2004 NPRM concerning FMVSS No. 214, NHTSA proposed injury criteria for the ES–2re's injury measuring instrumentation of the dummy's head, thorax, abdomen and pelvis. HIC would be limited to 1000 measured in a 36 millisecond time interval (HIC_{36}). Chest deflection would be limited to not greater than 42 millimeters (mm) (1.65 inch (in)) for any rib. Abdominal loads would be limited to 2,500 Newtons (N) (562 pounds). For pelvic injury, pubic symphysis force would be limited to 6,000 N (1,349 pounds). (See, ''Injury Criteria for Side Impact Dummies,'' Docket 17694.)

The ES–2re consists of a metallic ''skeleton'' which is covered by ''soft tissue'' consisting of rubber, plastic and foam. The dummy does not have lower arms because researchers concluded that lower arms on the side crash test dummy could interfere with the interaction of the side structure of a vehicle and the dummy's measurement of potential harm to the thoracic and pelvic regions. The ES–2re has a mass of 72 kilograms (kg) (158.8 pounds), which is the mass of a 50th percentile adult male without lower arms.[4]

The 90.0 cm seated height of the ES–2re is representative of adult males mid-size and taller. The dummy will provide valuable data on the interaction of these occupants with the vehicle's interior in FMVSS No. 214's side impact tests.

a. Development of the Rib Extensions

The ES–2re is a modified version of a European ES–2 side impact dummy, which was originally developed in Europe as the EuroSID–1 dummy in the late 1980s and early 1990s. The EuroSID–1 dummy is used in European Directive 96/27/EC. The EuroSID–1 dummy was redesigned and reevaluated during the late 1990s and early 2000 to address some problems with dummy performance, and was renamed the ES–2.

The ES–2re dummy is the result of a modification of the ES–2. Although the ES–2 has a better design than the EuroSID–1, the ES–2 has a back plate that causes a part of it to ''grab'' parts of a vehicle seat back in a crash test, which alters some of the dummy response measurements. To address the problem, which has also been observed in the EuroSID–1, the ES–2 dummy manufacturer redesigned the rib module by adding rib extensions to the dummy. The extended ribs provide a continuous loading surface that nearly encircles the thorax of the dummy and encloses the posterior gap of the ES–2 ribcage that was thought to be responsible for the seat back grabbing effect. The modified dummy is referred to as the ES–2re, with the ''-re'' suffix indicating the use of the rib extensions on the dummy. The agency's evaluation of the ES–2re dummy indicates that the rib extensions successfully addressed the back plate grabbing problem in the environments in which grabbing had occurred with the ES–2 dummy.

b. The Reference Materials for the Dummy

A technical report and other materials describing the ES–2re in detail have been placed in the following NHTSA dockets: the docket for the September 15, 2004 NPRM on the ES–2re (Docket 18864); the docket for the May 17, 2004 NPRM proposing the pole test upgrade to FMVSS No. 214 (Docket 17694); and the docket for today's final rule (Docket 25441). When we refer in this preamble to a docket item, we will identify by docket number where the item is filed.

The specifications for the ES–2re consist of: (a) A drawing package containing all of the technical details of the dummy; (b) a parts list; and (c) a user manual containing instructions for inspection, assembly, disassembly, use, and adjustments of dummy components. These drawings and specifications ensure that ES–2re dummies will be the same in their design and construction. The drawings, parts list and user manual are available for examination in the NHTSA docket section for this final rule (Docket 25441). Copies of those materials may also be obtained from Leet-Melbrook, Division of New RT, 18810 Woodfield Road, Gaithersburg, Maryland 20879, telephone (301) 670–0090.

II. Notice of Proposed Rulemaking (NPRM)

The NPRM preceding this Part 572 final rule on the ES–2re dummy was published on September 15, 2004 (69 FR 55550; Docket 18864). On January 12, 2005, in response to a petition from the Alliance of Automobile Manufacturers, NHTSA reopened the comment period for the NPRM until April 12, 2005 (70 FR 2105).

The September 15, 2004 NPRM discussed NHTSA's tentative findings that the ES–2re was commercially available, was sufficiently biofidelic, had good repeatability and reproducibility of its impact responses, performed well in vehicle crash tests, and had good durability in evaluation programs. NHTSA believed that the ES–2re could be used for both left- and right-side impacts. The agency also discussed in the NPRM that the dummy's responses did not show sensitivity to oblique impacts in full-

completing the rulemaking proceeding will be issued in the near future.

[2] NHTSA published an NPRM proposing to amend 49 CFR Part 572 to add the specifications for the small female dummy to Part 572 on December 8, 2004 (69 FR 70947; Docket 18865; extension of comment period, March 8, 2005; 70 FR 11189).

[3] The ES–2re can also assess load transfer between the upper and the lower torso, torso interaction with the vehicle seat back, neck injuries via upper and lower neck load cells; and the impact severity of the vehicle structure on the legs by way of a femur load cell. In addition, a clavicle load cell is available to assess shoulder loading.

[4] A 50th percentile adult male with lower arms has a mass of approximately 78 kg (172 pounds). If the ES–2re had arms, its mass would be equivalent.

scale crash tests. The agency also discussed in the NPRM proposed calibration test specifications and procedures.

III. Overview of Comments

The agency received comments from 5 different organizations: Autoliv, Denton ATD (DATD), First Technology Safety Systems (FTSS), Ferrari, and the Alliance of Automobile Manufacturers (Alliance). These comments, summarized below, are discussed in detail in the next section of this preamble. Autoliv generally supported the agency's proposal. DATD and FTSS were supportive, but suggested changes to the drawing package, certification corridors, and other technical matters of the NPRM. Ferrari stated that it observed ''anomalous'' peaks in the rib acceleration curves occurring between 67 and 73 ms after barrier impact with the vehicle, which Ferrari believed were caused by insufficient rebound damping in the rib modules.

The Alliance did not support the agency's proposal. The Alliance was concerned about matters including: the biofidelity of the dummy (the commenter believed that there are shortcomings in the ES–2re's shoulder, abdominal and pelvic regions, particularly when compared to the performance of the ES–2 and the WorldSID [5] in full-vehicle tests); the repeatability and reproducibility of the ES–2re; the directional impact sensitivity of the dummy; and miscellaneous issues, such as the symmetry of abdomen response when impacted on the right and left sides and the durability of the ES–2re. The Alliance also had comments regarding the proposed certification procedures and corridors. The Alliance submitted a petition for rulemaking (Docket 17252) asking NHTSA to initiate rulemaking to incorporate WorldSID into 49 CFR Part 572 and to use WorldSID in the upgrade of FMVSS No. 214 rather than the ES–2re.[6] The Alliance further suggested that, prior to the incorporation of WorldSID into 49 CFR Part 572, the ES–2 dummy should be used rather than the ES–2re, and only to the extent of using the dummy to measure responses relating to the head injury criterion (HIC).

IV. Response to the Comments

a. Biofidelity

Biofidelity is a measure of how well a test device duplicates the responses of a human in an impact. As discussed in the NPRM, two methods are currently available for assessing the biofidelity of a dummy in side impact testing. These are: (a) An International Organization of Standardization (ISO) procedure, referred to as ISO Technical Report (TR) 9790, which determines the biofidelity of a dummy by how well the dummy's body segment and/or subsystem impact responses replicate cadaver responses in defined impact environments; and (b) a NHTSA Biofidelity Ranking System.[7] The latter method determines the dummy's biofidelity based on two assessment measures: the ability of a dummy to load a vehicle or some other type of an impact surface as a cadaver does, termed ''External Biofidelity''; and the ability of a dummy to replicate those cadaver responses that best predict injury potential, termed ''Internal Biofidelity.'' The NPRM explained that the ES–2re's biofidelity was evaluated under both of these methodologies.

1. ISO Technical Report 9790 Methodology

The ISO rating system is based on a scale of 0 to 10, with 0 signifying total lack of biofidelity and 10 signifying that the body segment has a biofidelic response much like that of a human subject. Once the ratings are established for each body segment, the overall dummy's biofidelity is calculated and its ranking determined using the following classification scale: 0 to 2.6 (Unacceptable); 2.6 to 4.4 (Marginal); 4.4 to 6.5 (Fair); 6.5 to 8.6 (Good); 8.6 to 10 (Excellent).

The agency had tentatively assessed in the NPRM that the ISO-based biofidelity assessment of 4.6 would generally be the same for the ES–2re as the ES–2. The Occupant Safety Research Partnership (OSRP) and Transport Canada conducted biomechanical testing on the ES–2 dummy using the ISO-specified methodology and test procedures. The results of these tests were reported by Byrnes et al. in the 2002 Stapp Car Crash Journal, Vol. 46, in Paper No. 2002–22–0014. Because the ES–2re dummy's backplate modifications were developed with the express objective not to alter in any way the ES–2 dummy's impact response, and because the ES–2re conformed to the same calibration levels as the ES–2, the agency believed that the rib extension modifications to the ES–2 would not affect the ISO based biofidelity assessment. (Moreover, as reported in the NPRM, the findings of the NHTSA Biofidelity Ranking System tests appeared to confirm this assessment, as it was established that under that ranking system both the ES–2 and the ES–2re dummies had nearly identical biofidelity levels.)

In the NPRM, the agency stated that a biofidelity rating of ''fair,'' at 4.6, would be an improvement over the SID and EuroSID–1, which received ratings of 2.3 and 4.4, respectively (Byrnes, *et al.*, ''ES–2 Dummy Biomechanical Responses,'' 2002, Stapp Car Crash Journal, Vol. 46, #2002–22–0014, p. 353). The agency believed that the ES–2 (ES–2re) ISO biofidelity rating also compared favorably to that of the SID/HIII, which received an overall rating of 3.8.[8]

Comment: In its comment, the Alliance disagreed with NHTSA's statement that the rib modifications made to the ES–2 and resulting in the ES–2re configuration had no effect on the dummy's ISO-based biofidelity assessment. The Alliance stated that testing conducted by the OSRP resulted in an overall ISO score of 4.3 for the ES–2re, as compared to a 4.6 score for the ES–2.

Agency response: The Alliance neither provided a reference to a published report nor provided supporting data related to the assertion that the overall ISO score for the ES–2re is 4.3. The absence of substantiation of the comment limits our ability to respond. Even so, assuming the accuracy of the comment that the rib extensions reduced the ISO-based biofidelity assessment of the ES–2 from 4.6 to 4.3, or from ''fair'' to ''marginal,'' we nonetheless conclude that a 4.3 rating of the ES–2re is acceptable. NHTSA believes that the side impact dummy used in FMVSS No. 214 should measure the risk of thoracic and abdominal injuries, since these injuries are the most prevalent injuries in side crashes. The ES–2 (which does not have the rib extensions) is not suitable for use in our compliance testing, because of its back plate design and the problem that can occur with the back plate loading some seat backs and influencing the

[5] WorldSID is the next-generation 50th percentile male side impact dummy developed by industry representatives from the U.S., Europe and Japan, with the support of the European and Japanese governments (see Docket No. 2000–17252). This future dummy is believed by its developers to have better biofidelity than existing dummies, and is intended to better predict a wider range of injury potential in side impact testing than current dummies.

[6] The agency's response to the petition will be issued in rulemaking documents relating to the FMVSS No. 214 rulemaking.

[7] The NHTSA Biofidelity Ranking System method was reported by Rhule H., et al., in a technical paper in the 2002 Stapp Car Crash Journal, Vol. 46, p. 477, ''Development of a New Biofidelity Ranking System for Anthropomorphic Test Devices.''

[8] The biofidelity rating for the SID dummy used in FMVSS No. 214 is 2.3. The rating for the SID/HIII of 3.8, using the ISO method, reflects use of the special purpose side impact HIII head and neck as noted in 63 FR 41468, August 4, 1998.

dummy's rib deflection measurements. The rib extensions of the ES–2re allow for more accuracy in the measurement of rib deflections. Although the dummy with the extensions has a slightly lower, yet acceptable, ISO biofidelity ranking than a dummy without the rib extensions, the ES–2re is preferable over the ES–2 because it allows the agency to measure fully the risk of thoracic and abdominal injury in side crashes. We note also that a 4.3 ISO rating is an improvement over the biofidelity rating of SID, which received a rating of 2.3 (Byrnes, et al., ''ES–2 Dummy Biomechanical Responses,'' 2002, Stapp Car Crash Journal, Vol. 46, #2002–22–0014, p. 353). The ES–2re biofidelity rating also compares favorably to that of the SID/HIII, which received an overall rating of 3.8. Both the SID and SID/HIII have performed well in facilitating the installation of life-saving countermeasures that have substantially improved the safety of occupants in side crashes.

2. NHTSA Biofidelity Ranking System

Further, under the NHTSA biofidelity ranking system, the biofidelity rankings for the ES–2 and ES–2re are nearly identical. The biofidelity ranking system developed by Rhule, H., et al., *supra*, includes an assessment of the dummy's External Biofidelity and Internal Biofidelity. The Overall External and Internal Biofidelity ranks are an average of each of the external and internal body region ranks, respectively. A lower biofidelity rank indicates a more biofidelic dummy by this NHTSA ranking method. A dummy with an External and/or Internal Biofidelity rank of less than 2.0 is considered to respond much like a human subject.

The NHTSA ranking system is based on a variety of cadaver and dummy exposures, such as head drop tests, thorax and shoulder drop tests, thorax and shoulder pendulum tests, and whole body sled tests. The NHTSA ranking system also includes abdominal and pelvic offset sled test conditions. Each test condition has a response corridor derived from human cadavers and assigned a weight factor based upon the robustness of the particular test and its similarity to full scale crash conditions. For each response requirement, the cumulative variance of the dummy response relative to the mean cadaver response (DCV) and the cumulative variance of the mean cadaver response relative to the mean plus one standard deviation (CCV) are calculated. The ratio of DCV/CCV expresses how well the dummy response duplicates the mean cadaver response: A smaller ratio indicating better biofidelity.

Although this method does not establish an ''absolute'' ranking scale, the ranks provide a relative sense of the ''number of standard deviations away'' the dummy's responses are from the mean human cadaver response. Rhule conducted an analysis and found that if the dummy's biofidelity ranking is below two, then the dummy is behaving similar to the human cadaver. The evaluation methodology provides a comparison of both dummy response to cadaver response as well as a comparison of two or more dummies.

Rhule et al., *supra*, determined external and internal biofidelity rankings for the ES–2 dummy. NHTSA later repeated the tests for the ES–2re to determine that dummy's biofidelity rankings. Tables 1 and 2, below, provide a summary of External Biofidelity and Internal Biofidelity rankings, respectively, for the ES–2 and the ES–2re. The results of NHTSA's Biofidelity Ranking System tests indicate that the ES–2 and ES–2re dummies have essentially the same external and internal biofidelity assessment values, and that the rib extensions have had no effect on the biofidelity of the ES–2. The overall external biofidelity scores were 2.7 and 2.6 for the ES–2 and ES–2re, respectively, while the overall internal biofidelity scores for both were 1.6. The testing conducted for the ranking indicates that there exists no significant difference in the response characteristics of the ES–2 and ES–2re dummies.

TABLE 1.—EXTERNAL BIOFIDELITY RANKINGS OF THE ES–2 AND ES–2RE

External biofidelity rank	ES–2	ES–2re
Overall	2.7	2.6
Head/Neck	3.7	3.7
Shoulder	1.4	1.4
Thorax	3.2	2.9
Abdomen	2.5	2.6
Pelvis	2.7	2.7

TABLE 2.—INTERNAL BIOFIDELITY RANKINGS OF THE ES–2 AND ES–2RE

Internal biofidelity rank	ES–2	ES–2re
Overall with T1 (w/o abdomen)	.....	1.5
Overall with Defl. (w/o abdomen)	1.6	1.6
Overall with TTI (w/o abdomen)	n/a	1.6
Head*	1.0	1.0
Thorax—T1	n/a	1.5
Thorax—Delft	1.7	1.8
Thorax—TTI	.....	1.8
Abdomen	n/a	n/a
Pelvis	2.1	2.0

* In its comment, the Alliance pointed out an error in the internal biofidelity score for the ES–2 head, contained in Table 5 of the NPRM (69 FR at 55554, column 3). Table 5 indicated that the ES–2re head received a score of 1.0 while the ES–2 scored a 1.6. As shown in this corrected Table 2, both dummies scored a 1.0 for head internal biofidelity using the NHTSA ranking system.

Conclusion: Back plate loading is an undesirable feature of the ES–2 dummy (see NHTSA Technical Report, ''Design, Development, and Evaluation of the ES–2re Side Crash Test Dummy,'' May 2004, NHTSA Docket No. 2004–17694–11). The rib extensions of the ES–2re have proven to reduce the likelihood of the dummy's spine and back plate to interact with the vehicle's seat back. NHTSA believes that the rib extensions are a necessary component of the dummy and their inclusion has minimal effect on the dummy's response biofidelity. Accordingly, we conclude that the ES–2re test dummy, with rib extensions, will suitably duplicate the responses of a human in FMVSS No. 214 side impact tests.

b. Other Issues Relating to How Humanlike the Dummy Is

Commenters, primarily the Alliance, raised other issues relating to the humanlike qualities of the ES–2re. The Alliance's comment included a discussion of full-vehicle tests conducted by the OSRP, Toyota, and Transport Canada. The OSRP conducted matched-pair full-scale vehicle tests to compare the responses of the ES–2re, ES–2, and WorldSID in two conditions: (a) FMVSS No. 214 MDB tests at 33.5 mph of a 4-door, mid-size sedan, no air bag and a 4-door, small sedan, head/torso side air bag (SAB); and (b) oblique pole test at 20 mph, 15° impact angle, of a 4-door, small sedan, head/torso SAB. The majority of the Alliance's comments regarding the OSRP tests compared the ES–2re responses to those of the WorldSID, to support the commenter's opinion that the ES–2re is not as humanlike as the WorldSID.

We respond in this section to the issues raised by the commenters relating to the acceptability of the ES–2re as a test device for FMVSS No. 214. We will not discuss whether WorldSID is a more humanlike device than the ES–2re because the WorldSID dummy is still

under development. As recently as the spring of 2006, the WorldSID design was changing and has not been assessed for its suitability as a compliance test instrument. In short, WorldSID will not be ready for some time to attain the advancements in side impact occupant protection that the agency can achieve today with the ES–2re test dummy.

1. Anthropometry of Abdominal and Pelvic Regions

The Alliance believed that the EuroSID family, including the ES–2 and the ES–2re test dummies, is too narrow in the abdominal and pelvic regions as compared to ''the UMTRI anthropometry,'' whereas, the commenter believed, WorldSID is representative of the United States and world populations.

Agency Response: In support of its comment, the Alliance references a figure in its submission that provides a coronal-plane view of the ES–2 dummy and the WorldSID. The figure identifies the ES–2 pelvis breadth as 364 mm and the abdominal breadth as 282 mm, while the WorldSID's corresponding dimensions are labeled as 420 mm and 240 mm. (NHTSA believes that the Alliance made an error in its label and that the correct WorldSID abdomen dimension should be 340 mm.)

In its submission, the Alliance states: ''The anthropometry of the U.S. population is detailed in a study by UMTRI (1985)[1]. [Footnote in text.]'' The footnote only states ''UMTRI 1985'' without a complete bibliographic reference. NHTSA believes that the Alliance is referring to the University of Michigan Transportation Research Institute (UMTRI) document ''Anthropometry of Motor Vehicle Occupants,'' Volume 1, 1983, performed under NHTSA contract DTNH–80–C–07502. In this UMTRI study, the pelvis and abdominal breadths of the mid-sized adult male are reported to be 385 and 325 mm, respectively.

Table 3 below, ''UMTRI, ES–2re and WorldSID Dimensions,'' summarizes the UMTRI dimensions and compares them to the corresponding dimensions in the ES–2re and WorldSID.

TABLE 3.—UMTRI, ES–2RE AND WORLDSID DIMENSIONS

Dimension	UMTRI	ES–2re*	Delta, UMTRI vs ES–2re	WorldSID	Delta, UMTRI vs WorldSID
Abdomen breadth	325 mm	282 mm	−43 mm	340 mm	+15 mm
Pelvis breadth	385 mm	366 mm	−19 mm	420 mm	+35 mm

* The ES–2re dimensions are based on the Eurosid specifications derived from European anthropometric studies.

From the table, it is observed that the ES–2re does have an abdomen and pelvis that are slightly narrower than the UMTRI target dimension. However, to our knowledge this is of no consequence. Discrepancies relative to the anthropometry targets are often necessary to balance a number of design issues, such as the need to fit the dummy with electronic instrumentation for injury assessment capabilities, component durability, and repeatability of the responses.[9] The Alliance did not provide any information regarding potential adverse effects that might result from the abdomen and pelvis being slightly narrower in the coronal plane and NHTSA is not aware of any adverse effects associated with the commenter's claim. Accordingly, NHTSA believes that the current dimensional properties of the ES–2re abdomen and pelvis are satisfactory for their intended purpose.

2. Sitting Height

The Alliance commented that the pelvis of the ES–2re does not account for compression of soft tissue that occurs when a person is seated in a vehicle seat, and results in a seating height difference between the ES–2re and WorldSID of 58 mm, with the ES–2re seated higher.

Agency Response: The comment did not provide any information as to why the seating height of the ES–2re is not adequate for the dummy's intended application.[10] It appeared that the commenter assumed that the WorldSID seating height is accurate and the ES–2re's seating height is erroneous because it does not match that of the WorldSID.

NHTSA's review of sitting height anthropometry shows that the mean value of the erect sitting height of the 50th percentile male is 911 mm (reference UMTRI–83–53–1). The designed erect sitting height of the ES–2 is 909 mm (reference E/ECE/324, Regulation No. 95, October 1, 2004). Comparable design targets for the WorldSID are not yet published. NHTSA attempted to measure the erect seating height of a sample WorldSID dummy, however, making a comparable measurement proved to be somewhat problematic. The WorldSID's pelvis is designed to have an automotive-seated posture and is somewhat resistant to being placed into an erect posture. We measured the WorldSID to have a sitting height of 850 mm. While we do not have data for an average seated occupant height, the UMTRI data indicate that the ES–2re for the intended application is representative of the seated height of real people.

3. ES–2re's Representation of Large Male Population

In the September 15, 2004 NPRM (Docket 18864), NHTSA presented injury and fatality statistics in Tables 1 and 2 of that document. Table 1 represented the entire U.S. motor vehicle population. The NPRM stated, ''Of these [statistics in Table 1], approximately 35 percent are small stature occupants. The remaining occupants fall into the midsize and large segments of the population. The ES–2re dummy would address the risk of injury of these occupants in side impacts.'' The Alliance disagreed with NHTSA's assertion that the ES–2re would address the risk of injury for the large-sized segment of the population. The Alliance stated, ''[T]he ES–2re dummy anthropometry and weight are not representative of a large male.''

Agency Response: The agency has assigned benefits to the 50th percentile adult male and 5th percentile adult female dummies in a similar manner as that conducted in the advanced air bag final rule of FMVSS No. 208 (65 FR 30680; May 12, 2000). The countermeasures developed for the 50th percentile male are likely to benefit the 95th percentile adult male. Differences in height between a midsize male and large male occupants in the UMTRI

[9] We note that the WorldSID's abdomen and pelvis are slightly wider than the UMTRI dimension, which may also be inconsequential.

[10] Also, no data was provided regarding what type of vehicle was used or what seating procedure was applied that resulted in the alleged 58 mm difference. Different vehicle seat configurations and materials will play an important role in the seating height of the dummy and, in the absence of any detailed information, it was not possible for us to further examine the assertion.

contoured seat study is 2.6 cm (approximately 1 inch), and in standardized normal driving posture is 5 cm (1.96 inches) (UMTRI–83–53–1). The above data indicate that in a vehicle, the head of an ES–2re dummy would be lower than that of a large (95th percentile) male occupant by approximately 1 to 2 inches. FMVSS No. 214 pole test data indicate that curtain bags, at an inflated stage, come down far enough to cover the head of the ES–2re. Since the head of the seated 95th percentile male is higher than that of the ES–2re 50th percentile adult male dummy, the countermeasures developed to meet the test using the ES–2re 50th percentile adult male dummy are likely to provide similar benefits to the 95th percentile adult male occupant.

4. Abdominal Instrumentation

The Alliance stated that OSRP reported that the ES–2re measured abdominal forces below an injury assessment reference value (IARV) in full-scale tests, whereas WorldSID measured abdominal deflections above an IARV.[11] The commenter also stated that an upcoming research paper will report that the ES–2re is inadequately instrumented in the abdominal region, allowing it to miss important vehicle interactions. The Alliance stated that, in contrast to the ES–2re, the WorldSID presents a continuous surface through the thorax and abdomen up to the pelvis region, that is fully instrumented in the thorax and abdomen regions to ensure that all dummy to vehicle interactions are measured.

Agency Response: The ES–2re makes possible a more complete assessment of vehicle performance in side impacts than the SID or the SID/HIII, which will lead to greater side impact protection for occupants. In a NASS study of side impact crashes, it was estimated that between 8.5 percent and 21.8 percent of all AIS 3+ injuries are to the abdomen of restrained near side front seat occupants.[12] The abdominal load cells are sufficiently sensitive to measure the potential for injury. In an FMVSS No. 214 moving deformable barrier (MDB) test described in the May 2004 NPRM (69 FR at 28010, Docket 17694), the ES–2re detected a high abdominal force in the Chevrolet Impala at the dummy's abdominal area that was caused by an intruding armrest. In full-scale vehicle oblique pole tests conducted by the agency (see ''NHTSA Fleet Testing for FMVSS No. 214 Upgrade MY 2004–2005,'' discussed in Section V of this preamble), three vehicles exhibited loads which exceeded the IARV for the abdomen: the Ford 500, Chevy Colorado, and Ford Expedition. Because the current side impact dummy used in FMVSS No. 214 does not measure abdominal force, this potential injury risk will be newly detected by the ES–2re.

The commenter failed to show that the abdominal measurements of the ES–2re are problematic or deficient. The injury measuring capabilities of the ES–2re and the WorldSID are different. The WorldSID IARV for abdomen is based on abdomen rib deflection, while the ES–2re's IARV used in the FMVSS No. 214 final rule is based on loads measured at the abdomen (abdominal force limit of 2,500 N). Limiting the load to the abdomen will lead to important gains in occupant protection.

The agency also believes that the ES–2re is well instrumented in the abdomen region. The abdomen instrumentation is appropriately located and sensitive to lateral loading in the region above the pelvis and below the ribs. ES–2re drawing number 175–0000, sheet 4 of 5, provides information regarding the location of the abdominal load cells with respect to the pelvis and the lower rib of the thorax. The abdominal load cell extends from just below the upper surface of the pelvis, upward across the abdominal region, and ends approximately 50 mm below the lower surface of the lower thoracic rib. The load cell provides adequate coverage for measuring loads imparted to the abdominal region.

5. Shoulder Design

The Alliance referred to matched pair full-scale oblique pole tests that the commenter said Transport Canada (TC) conducted with the WorldSID and ES–2re. The Alliance stated that visual observations made in the TC study indicated that the ES–2re shoulder ''rotated significantly'' while the WorldSID shoulder ''deflected laterally inward towards the spine of the dummy.'' ''This [WorldSID's] motion is similar to the human shoulder tests run by Compigne et al,'' which, the Alliance stated, showed that ''the human shoulder deflects in oblique impact instead of rotating away from the impact'' or ''compresses inward and moves slightly backwards during loading from the front or directly from the side.'' The Alliance stated that the ES–2re dummy's shoulder rotates away from intruding structures, which can lead to a ''reduced excursion of the head when compared to WorldSID head kinematics'' and ''lower rib deflections [compared to WorldSID] that were evenly distributed across the ribs.'' To illustrate its comment, the Alliance referenced a Figure 18 in its submission, which depicted several camera images from tests on an Audi vehicle with thorax and window curtain side air bags using the ES–2re dummy and the WorldSID. The commenter also stated that in full-scale vehicle crash tests, ''The components of force measured at the shoulder of the ES–2re describe a combined loading characterized by equivalent longitudinal and lateral forces whereas the WorldSID forces are purely lateral.''

Agency Response: Test data indicate that the ES–2re's shoulder is fully acceptable. There is no indication of any detrimental effects in vehicle crash tests relating to the ES–2re's shoulder design, such as rib flat-topping which might occur when the shoulder has reached its limit for range of motion. Further, upon examination of the Alliance's Figure 18, we observe that: (1) The ES–2re's shoulder and head appear to be higher relative to the vehicle interior than that of the WorldSID; (2) the ES–2re's shoulder interacts substantially with the side curtain air bag, whereas the WorldSID's shoulder does not appear to contact the window curtain air bag; (3) the ES–2re's head contacts the window curtain air bag higher than does the WorldSID's head, and possibly makes contact with the upper portion of the door trim. These observations indicate that the ES–2re and WorldSID dummies experienced different loading patterns, consistent with the lower seated height of the WorldSID. To the extent that the WorldSID development has not yet been completed, any assessment about differences in kinematics and impact responses between the two dummies is premature. Also, scientific information is not available at this time to support a determination as to whether the ES–2re or the WorldSID has a better shoulder design. We believe the commenter's reference to the Compigne study is not relevant. The Compigne research studied localized pendulum impacts to the shoulder in a controlled test environment, whereas the full-scale oblique pole crashes conducted by TC resulted in loading over a much broader area of the dummy, with no controls on the direction or magnitude of the loading. With regard to internal shoulder loading, the scientific literature on this subject has not characterized internal shoulder loads recorded during lateral and oblique shoulder impacts. In the studies, only

[11] The Alliance did not provide any data to substantiate a basis for comparison among tests, such as equivalency of vehicle crash pulses or intrusion patterns.

[12] Samaha, R.S., Elliot, D., ''NHTSA Side Impact Research: Motivation for Upgraded Test Procedures,'' *supra*.

pendulum impact loads, an external load, have been recorded. In the absence of such data, it is not possible to establish a biofidelic basis for internal shoulder loads or to determine whether the ES–2re's or the WorldSID's internal shoulder responses better represent those of a human shoulder.

6. Rib Deflections

The Alliance's comment included a discussion of full-vehicle tests conducted by the OSRP, Toyota, and Transport Canada. The OSRP conducted matched-pair full-scale vehicle tests to compare the responses of the ES–2re, ES–2, and WorldSID in two conditions: (a) FMVSS No. 214 MDB tests at 33.5 mph of a 4-door, mid-size sedan, no air bag and a 4-door, small sedan, head/torso side air bag (SAB); and (b) oblique pole test at 20 mph, 15° impact angle, of a 4-door, small sedan, head/torso SAB. The majority of the Alliance's comments regarding the OSRP study are comparisons of the ES–2re responses to those of the WorldSID and ES–2.

A. *Rib Deflections of ES–2re vs. WorldSID in Perpendicular Impacts.* The Alliance believed that in perpendicular impacts, the ES–2re exhibited higher rib deflections than either the WorldSID or ES–2.

Agency Response: We note that the Alliance did not provide any data to substantiate a basis for comparison among tests, such as equivalency of vehicle crash pulses or intrusion patterns. Rib deflection response variation could be attributed to variations in crash pulse or intrusion patterns, which were not quantified in the Alliance's submission.

Further, with regard to the comparison between the ES–2 and the ES–2re, an increase in rib deflection is not unexpected or surprising. The ES–2re's rib extensions and modified back plate prevent the spine box from interacting with the vehicle seat. That interaction had limited the lateral torso translation of the ES–2 and provided an unrealistic load path in the dummy. Loads that would be absorbed by the spine box of the ES–2 are directed to other body segments in the ES–2re, such as the thorax, and thus a greater rib deflection in the ES–2re is anticipated. With regard to the comparison of ES–2re rib deflections with those of the WorldSID, the observation that the ES–2re exhibited a different amount of rib deflection than that of the WorldSID does not indicate a shortcoming with the ES–2re. To the extent that the WorldSID development has not been completed, specific comments about differences in rib deflections in vehicle crash tests or comparative biofidelity between the two dummies are premature.

B. *Rib Deflections of ES–2re vs. WorldSID in Oblique Loading.* The Alliance stated that the OSRP tests showed that the ES–2re exhibits lower rib deflections than either the WorldSID or ES–2 when subjected to oblique loading in FMVSS No. 214 MDB tests, and that Transport Canada observed ''under oblique loading conditions, the range of WorldSID rib deflections was much greater than the range of the ES–2re rib deflections. * * * Therefore, WorldSID appears to be more sensitive to differences in loading along the torso and better able to discriminate different loading conditions than the ES–2re.''

Agency Response: The observation that the ES–2re exhibited a different amount of rib deflection than that of the WorldSID and ES–2 does not indicate a shortcoming with the ES–2re.[13] The ability of the ES–2re to measure rib deflections in a meaningful way in a vehicle crash test is discussed in the section, ''Directional Impact Sensitivity,'' *infra.* Inasmuch as the WorldSID development has not been completed, specific comments about differences in rib deflections in oblique vehicle crash tests are premature. While the agency remains committed to proposing the incorporation of the WorldSID when the dummy is fully developed and shown to be suitable, gains in occupant protection will result from use of the ES–2re in today's side impact testing.

7. Rib Extensions

A. *Back Plate Loads.* The Alliance stated that the ES–2re back plate displayed reduced lateral loads and increased longitudinal loads as compared to the ES–2 when tested in FMVSS No. 214 MDB tests.

Agency Response: The ''no rib grab'' modifications made to the ES–2 dummy are intended to preclude the dummy's spine from acting directly as a lateral load path. Thus, it is reasonable to expect reduced lateral loads in the backplate of the ES–2re and somewhat increased front-to-back loading as the dummy interacts with the curvature of the seatback. The Alliance did not offer any supporting evidence that would indicate that the increase in longitudinal loads was unrealistic or that it resulted in any type of detrimental effect. NHTSA is unaware of detrimental effects that would arise due to increased longitudinal loading of the back plate.

B. *Load Path.* The Alliance also provided comments on Toyota full-scale vehicle tests in which the performance of the ES–2 and ES–2re were compared for oblique pole impacts. The commenter stated that during the oblique pole test, the door trim separated from the back of the door and struck the dummy's torso obliquely from the rear. The commenter believed that the rib extensions in the ES–2re provide a load path not found in the ES–2, and thus rib deflections for the ES–2re were greater than that observed in the ES–2.

Agency Response: NHTSA believes that the rib extensions found in the ES–2re represent a more humanlike continuous loading surface configuration than that of the ES–2. Since the ES–2 does not have structural elements at the oblique posterior location, there is nothing to impact, and so it is reasonable to expect lower rib deflections for oblique rear loading conditions than would occur for either the ES–2re, or in humans, under similar loading.

c. Repeatability and Reproducibility

A dummy's repeatability and reproducibility is typically based on the results of component tests and sled tests. (Repeatability is the similarity of responses of a single dummy measured under multiple identical test conditions. Reproducibility is the smallness of response variability between different dummies of the same design under identical test conditions.) In the tests, the impact inputs as well as the test equipment are carefully controlled to minimize external effects on the dummy's response.

Component tests are typically better controlled than sled and vehicle tests, and thus produce more reliable estimates of the dummy's repeatability and reproducibility than is possible in the latter-type tests. Component tests are used to establish the dummy's component performance relative to the biomechanical corridors to which each major body segment must correctly respond. That is, if the dummy's component is or becomes deficient, the component test will identify to the user that the component will not respond properly in impact tests.

Sled tests offer a method of evaluating the dummy as a complete system in an environment more like a vehicle test. Sled tests establish the consistency of the dummy's kinematics, its impact response as an assembly, and the integrity of the dummy's structure and instrumentation under controlled and

[13] Furthermore, rib deflection response variation could be attributed to variation in crash pulse or intrusion patterns, which were not quantified in the Alliance's submission. We note also that the validity of the WorldSID's rib deflection responses in a vehicle crash test has not been established.

representative crash environment test conditions.

NPRM

The NPRM stated that the agency's component and sled repeatability and reproducibility tests were based on two dummies. (See ''Technical Report—Design, Development and Evaluation of the ES–2re Side Crash Test Dummy,'' Docket 17694.)

Component Tests

The component tests were conducted on head, neck, shoulder, upper rib, middle rib, lower rib, abdomen, lumbar spine and pelvis body regions. The repeatability assessment was made in terms of percent CV (Coefficient of Variance). A CV value of less than 5 percent is considered excellent, 5–8 percent good, 8–10 percent acceptable, and above 10 percent poor.[14] The repeatability of the dummies was assessed in two separate series of tests. In the first series, the dummy calibrations were performed between sled or vehicle crash tests. In the second series, the calibration tests were performed consecutively without any other intermittent tests. In the first series, nine tests were performed with one of the dummies, and seven tests with the other. In the second series, two newly acquired dummies were exposed to five sets of calibration tests each. Reproducibility was assessed by comparing the average responses of both dummies.

The results of the component repeatability tests indicated ''excellent'' and good repeatability for the ES–2re dummy for all components except for the pelvis, which had a rating classification of ''good,'' and the shoulder with a rating of ''acceptable.''

The reproducibility assessment was made in terms of response differences between each of the two sets of dummies with respect to the mean. The rating for reproducibility takes into account the cumulative variabilities of two or more dummies and is primarily indicative of the repeatability of the manufacturing process of the same type of dummy and to some extent the repeatability of design specifications, inspection, and test methodology. The reproducibility assessment does not serve the purposes of accepting or rejecting the dummy; rather it is an indication of how far the responses of different dummies could vary under identical test conditions. The results of the pooled component tests indicate that the neck, thorax, lumbar spine and pelvis responses are well below the 5% level and the head, shoulder and abdomen response below the 7% level. These levels are quite acceptable and consistent with the repeatability norms.

Sled Tests

To reduce test-to-test variation of sled pulse parameters, NHTSA tested two ES–2re dummies (designated ''dummy #070'' and ''dummy #071'') simultaneously on a dual occupant side impact Hyge sled buck developed by the agency. The sled pulse was an approximate half-sine wave, with the peak acceleration of 12.7 g's and duration of approximately 80 ms. The impact speed was 6.7 meters per second (m/s) (22 ft/s). Two test conditions were used for the repeatability and reproducibility assessment: a flat rigid wall; and a rigid wall with abdomen offset (simulating a vehicle armrest). The two ES–2re dummies were exposed to two series of five Hyge sled tests, for a total of 10 test exposures per dummy.

For the flat wall test condition, the wall was 374 mm (14.7 in) high from the front edge of the seat, and 368 mm (14.5 in) long from the back of the seat. For the abdomen offset test condition, the same flat wall was used, with a protruding 305 mm (12 in) long, 76 mm (3 in) thick and 83 mm (3.3 in) wide wooden offset block attached to the wall. The offset block, simulating an armrest, was oriented such that it would impact the abdomen only, above the pelvis and below the lower rib. The objective of the abdomen offset tests was to provide a test environment with severe loading of the abdominal region.

The sled buck incorporated a Teflon-covered bench seat with two Teflon-covered rails to support the seated dummies from behind. As the sled buck was accelerated, the buck slid beneath the dummies until the dummies' left side impacted the rigid wall.

High-speed digital video cameras were positioned in front of each dummy in order to capture head motion for use in performing motion analysis of the head translation. The dummies were instrumented with sensors to record principal injury indicators such as head, resultant lower spine (T12) and pelvis accelerations, rib deflections, abdominal, lumbar and pubic symphysis loads, and other parameters. A contact switch was positioned on the side of each dummy and on the load wall at the location of first contact to indicate the precise instant of dummy contact with the wall.

Flat Rigid Wall Test Results

Using the dummy rating practice set forth in ISO/TC22/SC12/WG5, generally the responses in the flat wall tests displayed either excellent or good repeatability, except for the lumbar Y (shear) force repeatability of dummy Serial Number (S/N) #070 falling outside the CV acceptability boundary at 14.8%. This elevated CV value for dummy #070 also was responsible for a reproducibility assessment at 17.5%. While these CV values are relatively high, the agency is not considering an injury assessment associated with this response. Moreover, this response is not considered to be of importance since it did not have an effect on either the magnitude of the loading or the variability of the adjacent structure responses, such as pubic symphysis, the abdomen and the T12. HIC responses exhibited excellent repeatability of each dummy and reproducibility of both dummies. In all tests, the rib displacement time history provided a smooth response, with no indications of the flat topping phenomena that had been a shortcoming of previous versions of the EuroSID, EuroSID–1, and the prototype ES–2 dummies.

Rigid Wall With Abdomen Offset Test Results

The responses for the abdomen offset sled tests[15] provided either excellent or good repeatability and reproducibility, except for one test in which the lumbar moment reproducibility response had a CV value of 16.7, which is only by 1.7% into the poor range. While this CV value is high, this measurement is not considered for injury assessment with the EuroSID, EuroSID–1 and ES–2re dummies. Furthermore, this slightly elevated response appears not to affect either the magnitude of the loading or the variability of the adjacent structure responses, such as pubic symphysis, the abdomen, the T12 moment and the rib displacement time history, without any indications of flat topping.

Based on the above, the agency tentatively concluded that the repeatability and reproducibility of the

[14] ISO/TC22/SC12/WG5.

[15] The first test in the series with dummy S/N #070 was excluded. Upon review of the response traces after the test series was completed, it was noted that this test resulted in significantly lower abdominal and lumbar loads and larger rib displacements than in the remaining four tests. (See Appendix C, Figures C.10 through .18 of the Technical Report, Docket 18864–12, *supra*). Upon review, the data for that test indicated that impact contact with the abdominal offset block appear to have slightly favored the proximity of the lower rib rather than the middle of the abdomen, as had been the case in the subsequent four tests. This could have been caused either by a slight variation in the set-up of the dummy for the test or a slight posture realignment during the dummy's movement while approaching the impact surface. Inasmuch as the seating procedure was not varied and this aberration did not reoccur in the four subsequent tests, this test was considered to be a legitimate outlier.

ES–2re responses in flat wall and abdominal offset impacts are acceptable (generally in the order of ''excellent'').

1. Sample Size

Both the Alliance and Autoliv expressed concerns with the small sample size (n=2) of dummies used to establish repeatability and reproducibility of the ES–2re. The Alliance was concerned that only one dummy manufacturer was represented in the sample. The Alliance stated: ''In order to get a reasonable assessment of dummy repeatability and reproducibility, it is necessary to subject six dummies, of each combination, to the same series of tests.''

Agency Response: At the time NHTSA conducted its evaluation of the ES–2re, only one dummy manufacturer could provide NHTSA with production-ready samples of the dummy. That said, the agency nonetheless believes that the sample size (n=2) used for the NPRM was sufficient. The repeatability and reproducibility studies of the ES–2re described in the NPRM complemented the repeatability and reproducibility work previously conducted on the ES–2 dummy. The ES–2 has been used for testing and research purposes in Europe, the United States and elsewhere for years and has proven repeatable and reproducible performance. The repeatability and reproducibility work on the ES–2re built on those earlier assessments of the ES–2 and showed that the ES–2 with the rib extensions had good to excellent repeatability and reproducibility.

At the same time, we recognize that valid data can potentially be gleaned from tests of additional ES–2re test dummies with regard to the certification corridors used to assess performance of the dummy. As explained later in this preamble, the agency has therefore used ES–2re performance data submitted by the Alliance and the SAE in determining the certification corridors of this final rule, since the inclusive database is based on a larger sample size of ES–2re tests.

2. Reproducibility of Pelvic Load Measurements

The Alliance expressed concerns ''relative to the reproducibility of the pelvic load measurement of the EuroSID-family of dummies.'' The commenter stated that it analyzed pelvic certification data provided by the SAE, studying the correlation between the internal and external loads measured in the pelvic impact certification test. The Alliance plotted the pubic symphysis load (internal loads) against the impactor force (external loads) and computed the coefficient of determination (R^2) for the relationship. The Alliance stated that the resulting R^2 values were low and therefore expressed concern ''* * *that the pelvic load measurement of the ES-families of dummies has a reproducibility issue.* * * ''

Agency Response: We disagree with the implication that there is a need to establish controls on the ratio of force input to output for the pelvis certification test. The R^2 is not a meaningful assessment in this case, because the external loads account for impact inputs through several portions of the dummy, such as friction of the dummy with the seat, lumbar spine shear, and compression of the flesh, whereas the pubic symphysis loading reflects internal loads between the two pelvis halves. Furthermore, the agency conducted an evaluation of the repeatability and reproducibility of the pelvis response in both certification and sled test environments (reference NHTSA–2004–18864–15 and –16, respectively). In certification testing (pendulum testing), the ES–2re dummies exhibited excellent repeatability and reproducibility for all response criteria. In the sled testing portion of the evaluation, both dummies displayed excellent repeatability and reproducibility when exposed to the flat-wall test condition. In the abdomen offset sled test condition, one dummy exhibited excellent repeatability, while the second dummy scored a good rating for repeatability. Taking the certification and sled test results both into account, the dummies' pelvis response provided excellent reproducibility. Given these findings, the agency has concluded that the reproducibility of the pelvic load measurement of the ES–2re test dummy is acceptable.

3. Sensitivity to Initial Conditions

The Alliance believed that the ES–2re exhibited ''an unacceptable sensitivity to initial conditions.'' Citing an OSRP sled test study, the Alliance contended, ''The results show differences in the deflection responses depending on whether or not a contact switch was taped to the arm * * * ''

Agency Response: In our review of the referenced OSRP study, we did not see a discussion indicating that the test parameters and setup procedures were reasonably controlled in a manner that would warrant comparison of the test results. The report offers no documentation of the dummy pre-test positioning, nor does it provide any analysis of the sled pulse or impact speeds. Variations in these conditions could produce the differences observed and would not indicate any deficiency with the ES–2re dummy. Furthermore, the addition of a contact switch to the dummy's arm is not specified in the FMVSS No. 214 test procedure. Thus, the effect, if any, of a contact switch on shoulder response is not an issue relevant to this rulemaking proceeding.

4. Rib Acceleration Response

Ferrari provided comments on the ES–2re's rib acceleration response in full-scale MDB tests. Ferrari said it observed ''anomalous'' peaks in the rib acceleration curves that happened between 67 and 73 ms after barrier impact with the vehicle. Ferrari provided plots of the upper, middle, and lower rib acceleration responses (Figures 1, 2, and 3 of the Ferrari submission). The plots indicated that secondary peaks exist in the time range between 67 and 73 ms after barrier impact with the vehicle. For the upper rib, the peak acceleration in this time range was approximately 400 g, while the peaks for the middle and lower ribs were on the order of 1,200 and 1,400 g. Ferrari believed the peaks are anomalous since ''the dummy is still far from the door'' during this time period, and thus the peaks ''are not the result of any contact of the dummy torso with the interior surfaces.'' Ferrari further stated that the ''anomalous'' rib acceleration peaks were coincident with an acceleration peak in the ''VB12 signal,'' which NHTSA assumes to be a reference to the lower spine acceleration. Ferrari suggested that the source of the anomaly is insufficient damping of the rebound motion of the rib. Ferrari did not indicate the filter specifications used in processing the data they analyzed.

Agency Response: NHTSA has reviewed the rib acceleration responses from a series of 10 sled tests conducted to evaluate the repeatability and reproducibility of the dummy's responses (reference NHTSA Technical Report, ''Repeatability and Reproducibility of the ES–2re Dummy in the Sled Test Environment,'' June 2004, NHTSA Docket No. 2004–18864–16). In this review, we did not observe any occurrence of a secondary peak similar to that described by Ferrari. Further, anomalous peaks did not occur in the data from the vehicle crash tests conducted in support of the FMVSS No. 214 NPRM (these data are discussed later in this preamble). We note also that some comments to the FMVSS No. 214 NPRM suggested that NHTSA should not adopt any injury criteria in FMVSS No. 214 associated with the ES–2re's resultant lower spine acceleration (for reasons unrelated to Ferrari's

comments). The agency will respond to this suggestion in the FMVSS No. 214 final rule. If the agency agrees with the suggestion, the ES–2re's lower spine acceleration will not be used in the FMVSS No. 214 compliance tests.

d. Directional Impact Sensitivity

The NPRM noted that limited testing of the ES–2re's thorax in oblique pendulum impacts indicated some sensitivity in the rib deflection and spine acceleration responses. The NPRM noted also that the European Enhanced Vehicle-safety Committee (EEVC)1 [16] had also found similar sensitivity in the ES–2's thorax rib compression measurements in oblique pendulum impact tests. However, NHTSA tentatively concluded in the NPRM that the pendulum test was not necessarily reflective of the dynamic interaction between impacted door and occupant during the crash event. In the pendulum test, the loading was imposed on the dummy's ribcage in a fixed, large oblique impact angle throughout the entire loading period as well as by an impactor that produced a very concentrated, localized loading to the ribcage. The agency stated that test data from our full scale crash tests did not indicate evidence of the sensitivity produced in pendulum type impacts. Comments were requested on whether dummy users have seen such effects in measured responses during full scale vehicle crash tests.

Citing research conducted by the Partnership for Dummy Technology and Biomechanics (PDB) (the PDB is an association of automobile manufacturers and equipment suppliers) and the OSRP, the Alliance expressed concerns over the ES–2re's response to oblique impacts. In contrast, Autoliv stated ''we do not feel that the effect of oblique loading on the ES–2 dummy rib deflection measurements in most full scale crash tests is significant.''

1. Impact Direction

According to the Alliance, the PDB conducted sled tests using a padded wall that could be rotated to provide impact angles of 0°, +15° (oblique front), or −15°, (oblique rear). Each test condition (0°, +15° and −15°) was repeated three times, with the ES–2, the ES–2re, and the WorldSID. The commenter stated that the PDB found that the ES–2re exhibited decreased peak rib deflections when impacted obliquely from the front (+15°), as compared to purely lateral impacts. The Alliance stated that PDB believed that the ES–2 and ES–2re are ''highly sensitive to changes in the angle of the impact surface,'' whereas, the Alliance stated, the WorldSID ''is much less sensitive to impact direction, which is especially important for oblique loading.''

Agency Response: There is no biofidelic standard for rib deflection response in oblique loading in the sled test environment that has been published and accepted by the biomechanics community. Thus, it cannot be determined that the ES–2re's response characteristics inadequately replicate the human rib deflection response in oblique loading, or that the WorldSID's response characteristics are a better match to this criteria than the response of the ES–2re. It could be that the ribs of a human occupant would respond differently to oblique loads than it would to lateral loads.

Moreover, NHTSA believes that the ES–2re's rib response in vehicle crash tests is fully satisfactory. Our analysis of the thoracic response of the ES–2re demonstrated that the dummy's thoracic responses provide valid data. See ''Comparison of title and date of ES–2 Driver Dummy in Lateral vs. Oblique Pole Impacts and ES–2re Driver and Passenger Dummies in FMVSS No. 214 Type MDB Crash Tests,'' (October 2006), placed in the docket for this final rule (Docket 25441). As discussed in the report, we analyzed crash data from oblique and perpendicular pole tests of a 1999 Maxima and a 2001 Saturn which were not equipped with side air bag systems. The rib deflections of the ES–2re in the driver's seating position were almost identical in the oblique and perpendicular pole tests. The rib deflections of the dummies were consistent in time and were of similar magnitude. There was no indication of flat-topping, binding or distortion of the deflection signal due to oblique loading. In addition, T1 driver lateral acceleration was consistent and did not show differences between oblique and perpendicular impacts.

While both the lower spine accelerations (T12) and the summed abdominal forces for the driver ES–2re were higher in the oblique pole test configuration, the oblique pole test was run at a higher impact speed than the perpendicular test (20 mph versus 18 mph), which likely increased the dummy based measurements. Also, in the oblique pole test, the lower part of the dummy torso appears to be loaded earlier in the crash event than in a perpendicular test, which indicates that the T12 and abdominal forces could be higher because initial loading is more through the lower part of the torso.

We also analyzed the measurements of the ES–2re in FMVSS No. 214 MDB tests of a 2001 Ford Focus, 2002 Chevrolet Impala equipped with a combo head/thorax side air bag for the driver, and a 2004 Honda Accord equipped with a thorax bag. Overall, the driver rib deflections were higher than the deflections for the rear passenger dummy. However, a different loading environment caused the lower rib deflections for the ES–2re in the rear seat as compared to the driver. Rib deflections showed a slow rise, and the peaks occurred about 10 milliseconds later than those of the driver dummy. The loading duration was also considerably longer. The passenger rib deflections were consistently lower towards the bottom of the ribcage.

For the Focus, the driver and rear passenger T12 accelerations were comparable. For the Impala and Accord, the rear passenger T12 acceleration was larger than that of the driver dummy. This difference could be attributed to the fact that both the Impala and Accord had a thorax side air bag for the driver position and none for the rear passenger position.

Use of the ES–2re dummy in vehicle crash tests did not indicate any detrimental effects due to shoulder design, such as rib flat-topping or distortion of signals, which, if such had occurred, would have showed that the shoulder had reached its limit for range of motion or had otherwise performed unacceptably due to a forward motion of the clavicles. Further, the data from the tests did not show any sensitivity to oblique loading in the dummy's abdomen. The passenger abdominal force for the Impala was very large compared to the driver abdominal force, but this was due primarily to large structural intrusions (the test film shows the arm rest intruding into the dummy in the MDB test). This indicates a localized loading through the abdomen for the Impala passenger (resulting in an off-loading condition for the chest and, thus, much lower rib deflection measurements as compared to the driver dummy). For the Accord, the passenger abdominal force was larger than the driver abdominal force, but the difference could be attributed to the presence of the side air bag in the driver position.

In conclusion, the data show that there is virtually no effect due to oblique loading in the ES–2re deflection readings in oblique pole tests as compared to perpendicular pole

[16] The steering committee of the EEVC is composed of representatives from European national governments. The EEVC conducts research in motor vehicle safety and develops recommendations for test devices and procedures that governments can decide to adopt into national regulations.

impacts, and no indication of sensitivity in MDB tests.

2. Rib Binding in ISO 9790 Tests

The Alliance stated that OSRP subjected the ES–2re to linear impactor tests using the ISO 9790, Thorax Test 2 methodology. Impacts were conducted at 0°; at forward oblique angles of +15° and +30°; and rearward oblique angles of −15° and −30°. The commenter stated that, when impacted at +30°, the ES–2re's rib deflection response exhibited a delayed onset and nearly 20 mm lower peak deflection as compared to the lateral (0°) impacts. ''These observations * * * lead the OSRP to conclude that the rib system of the ES–2re initially binds when impacted from an angle of 30 degrees forward of lateral.''

Agency Response: Rib binding is typically observed as a flat period in the displacement-time history of the rib response, which is referred to as ''flat-topping.'' Although the Alliance suggested that rib binding is occurring during the +30°oblique impact, the data provided by the Alliance do not exhibit any flat-topping in the rib deflection response. NHTSA has done testing with the ES–2re dummy similar to the impact tests conducted by the OSRP and has not observed a delayed onset such as that reported by the Alliance (referencing the OSRP tests). As stated in the preceding section, we have also concluded that crash test data do not indicate evidence of the magnitude of sensitivity produced in the pendulum type impacts. Thus, we do not concur with the OSRP's concern of rib binding when impacted obliquely in the ISO 9790 test procedure.

3. ISO 9790 Ratings for Lateral and Oblique Impacts

The Alliance compared the ES–2re's impactor force-time histories from the lateral and oblique impacts to the corridor published for ISO 9790 Thorax Test 2. The commenter stated that there is a ''fair'' rating for the lateral impacts (biofidelity score = 5) and an ''unacceptable'' rating for the oblique forward impacts (biofidelity score = 0).

Agency Response: The Alliance's comments again question the dummy's oblique response characteristics. As previously explained, NHTSA believes that the ES–2re's rib response in vehicle crash tests is fully acceptable for this rulemaking effort. Crash test data indicate that there is virtually no effect due to oblique loading on the driver ES–2re deflection readings in oblique pole tests as compared to perpendicular pole impacts. Furthermore, the ES–2re represents a significant improvement in biofidelity as compared to the SID and SID–HIII dummies currently specified for use in FMVSS No. 214. NHTSA's biofidelity evaluation using the Biofidelity Ranking System indicated that the ES–2re is superior to the SID–HIII. OSRP's research also supports this conclusion in that it has shown that the ES–2re is superior to the SID using the ISO biofidelity evaluation methodology. The ES–2re can also detect critical loading by intruding vehicle structures at the head and lower torso levels that are undetected by the SID. Adopting the ES–2re and the injury assessment reference values associated with the risk of injury to occupants will substantially enhance the safety of occupants in side impacts.

e. Durability

Autoliv concurred with NHTSA in concluding that the ES–2re has ''good durability and withstands high severity loading.'' In contrast, citing a statement in the Part 572 NPRM regarding replacement of parts in full-scale crash testing (69 FR at 55556), the Alliance expressed concern that the ES–2re required replacement of ribs after ten full-scale vehicle crash tests, whereas ''[i]t is usual for a Hybrid III 50th or 5th to endure approximately 25 full vehicle crash tests before requiring a full rib set replacement.''

Agency Response: The durability of the ES–2re is fully acceptable. NHTSA conducted an extensive evaluation of the ES–2re dummy, which exposed two dummies to 10 rigid-wall sled tests and 5 repeats of each certification test. In addition, one dummy was exposed to increased severity component tests, designed specifically to assess the durability of the ES–2re. In this testing, the proposed certification test procedures were followed, except the impact energies were increased by as much as 30 percent. The increased energy levels were achieved by performing the certification tests at higher velocities. The dummy was exposed to three repeats each of the increased severity neck and lumbar tests; and five repeats each of the shoulder, abdomen, and pelvis tests (reference NHTSA Technical Report, ''Evaluation of the EuroSID–2re Certification Test Repeatability and Reproducibility,'' July, 2004, NHTSA Docket Number 2004–18864–15). Next, both dummies were subjected to severe thoracic impacts with a 23.4 kg impactor at 6.7 m/s in the development of a proposed full-body thorax impact test procedure (reference NHTSA Technical Report ''Development of A Full-Body Thorax Certification Procedure and Preliminary Response Requirements for the ES–2re Dummy,'' Sept. 2004, NHTSA Docket Number 2004–18864–17). One dummy was subjected to 5 exposures and another was subjected to 15 impacts.

Throughout these evaluations described above, the components of each dummy were inspected for any instance of excessive wear or failure. The dummies did not exhibit any observable component damage or failure.[17]

Finally, in addition to the tests described above, the ES–2re was subjected to 14 pole test exposures and 14 vehicle crash (MDB) test exposures without significant durability problems. Both dummies required one new shoulder foam mid-way through the test series. Also, one dummy required the replacement of a rib displacement transducer that failed for reasons not known, and the other dummy needed a new skin suit and one rib after intruding interior components cut through the skin suit and damaged the skin and foam of the rib. Collectively, these observations lead to the conclusion that the durability of the ES–2re dummy is fully acceptable for its intended use in FMVSS No. 214.

f. Symmetry

The NPRM explained that NHTSA believed that the ES–2re dummy will perform equally well, upon appropriate conversion when struck on either side, i.e., in both driver (left) side and passenger (right) side crash tests. The agency noted that predecessor test dummy to the ES–2re (the EuroSID–1) has been and still is being used in England, Japan and Australia for right side impacts. The EuroSID–1 has the same left to right side impact conversion provisions as the ES–2re. The agency explained that the agency's ES–2re users manual (the Procedures for Assembly, Disassembly and Inspection) (''PADI'') discusses the steps needed to be taken to convert the dummy for use from the left to the right side of the vehicle.

The Alliance expressed concern for symmetry of the ES–2re's abdomen response, i.e., the dummy's ability to provide similar responses when impacted on the right and left sides. The Alliance, referring to a 2002 Stapp paper by Byrnes, et al., stated: ''armrest forces

[17] In response to a specific comment made by the Alliance, it should be noted that dummy component durability is not a simple function of the number of tests conducted. Test severity is a much more significant factor in determining component life. Any dummy, be it an ES–2re or a Hybrid III 50th dummy, may require rib replacement after a single test if the test severity is substantial or the structural and/or occupant protection systems do not sufficiently attenuate the energy distribution of the crash.

from the right side impacts in Abdomen Test 2 were approximately 40% higher than those from the left side.''

Agency Response: In the 2002 Stapp study cited by the Alliance, thorax impacts and abdomen drop tests were conducted with the ES–2 (standard version) dummy. Tests were conducted with the dummy configured for left or right side impacts to evaluate the symmetry of the ES–2. (From review of the paper, it is not possible to determine the quantity of tests conducted for each configuration.) The paper concluded that the ES–2 provided symmetrical responses in the thorax tests and in Abdomen Test 1.

NHTSA does not believe that the Byrnes study definitively identifies a shortcoming with the dummy's reversibility characteristics. Variations observed in Abdomen Test 2 were attributed to ''a higher variability in the test procedure.'' The report noted, ''The difference observed * * * can be partially explained by the increased variability due to greater drop distance. Since the dummy had further to fall, it is more susceptible to rotating prior to impact with the armrest.''

Additionally, the agency conducted tests to evaluate the symmetry of response. In the study, the ES–2re dummy was configured for right side impacts and certification tests were performed with the head, neck, abdomen, lumbar, and pelvis, as well as a full-body thorax impact. The results indicated that the ES–2re dummy was fully capable of meeting the certification response requirements when configured for right side impacts, as well as left side impacts. Accordingly, all data indicate that the dummy performs well when used on either side of the vehicle.

g. Using the ES–2 Test Dummy

ES–2re v. ES–2

The Alliance supported the ES–2 dummy as a temporary alternative test device, pending the availability of WorldSID. The Alliance supported the ES–2 because the dummy is already implemented in both EuroNCAP and the UN ECE-regulation 95.02 Supplement 1, i.e., ''at least the ES–2 is harmonized with Europe and already in widespread use.''

Agency Response: The ES–2re is more appropriate for use in FMVSS No. 214 than the ES–2 dummy. As explained above in this preamble, and in the May 2004 FMVSS No. 214 NPRM and in the September 2004 NPRM preceding this final rule, the ES–2 dummy has a deficiency that limits its usefulness in FMVSS No. 214. The agency determined that, in a number of vehicle crash tests, the back plate of the ES–2's upper torso grabbed into the seat back of the vehicle, which lowered the rib deflections measured by the dummy. (''Design, Development, and Evaluation of the ES–2re Side Crash Test Dummy,'' May 2004, NHTSA Docket No. 17694–11.) This ''back plate grabbing'' problem has long existed in the ES–2 line of dummies. Although efforts were undertaken to address the problem in dummies preceding the ES–2, the back plate grabbing problem has continued with the ES–2. Back plate grabbing has been seen within the ES–2 in the non-governmental European New Car Assessment Program (EuroNCAP) on side impact. EuroNCAP accounts for the problem by adjusting downward the consumer rating scores of vehicles when back plate grabbing is deemed to have occurred.

The ES–2re has rib extensions that solve the back plate grabbing problem of the ES–2. The rib extensions provide a continuous loading surface that nearly encircles the thorax and encloses the posterior gap of the ES–2 ribcage that was responsible for the ''grabbing'' effects. Test data show that the rib extensions reduced the back plate grabbing force to insignificant amounts in vehicle side impact tests that had previously yielded large back plate loads with the ES–2. The rib extensions did not affect rib deflection responses in tests of vehicles that had not originally yielded high back plate loads.

As discussed above, we have found the biofidelity, repeatability, reproducibility, and other aspects of the ES–2re to be fully acceptable. In short, considering all aspects of the ES–2re and ES–2 dummies, we conclude that the ES–2re dummy should be incorporated into FMVSS No. 214 rather than the ES–2.

The ES–2re Should Measure More Than HIC

While supporting the ES–2 over the ES–2re, the Alliance stated that both test dummies have design features that affect the dummies' thoracic responses and the resulting rib deflection measurements. According to the commenter, the ''limited stroke piston/cylinder mechanism'' of the dummies can bind in a lateral impact, and the ''binding potential is further compounded as the lateral impact becomes more oblique.'' Further, as discussed above in this preamble, the Alliance also objected to the shoulder design and abdomen and pelvis of the ES–2re and ES–2. The commenter said that NHTSA should just require manufacturers to meet a head protection criterion, and not criteria assessing injury to the thorax, abdomen or pelvis.

We are denying this request. As discussed previously, NHTSA analyzed response data from matched pairs of oblique and lateral pole tests with two non-air bag equipped vehicles. In doing so, NHTSA determined that the rib deflection responses in both oblique and purely lateral tests were consistent in time and similar in magnitude. The agency concluded that there is virtually no effect due to oblique loading in the driver ES–2re deflection readings in oblique pole tests as compared to perpendicular pole impacts. The data also do not demonstrate an indication of sensitivity to oblique loading in MDB tests. In sum, the data show that there are no deficiencies with the ES–2re that would justify limiting its injury assessment to that of HIC only. To the contrary, the test data from the Impala test show that the abdominal response of the ES–2re in the rear passenger position in the MDB test detected critical loading by intruding vehicle structures at the lower torso level. In a NASS study of side impact crashes, it was estimated that between 8.5 percent and 21.8 percent of all AIS 3+ injuries are to the abdomen of restrained near side front seat occupants. (Samaha, R.S., Elliot, D., ''NHTSA Side Impact Research: Motivation for Upgraded Test Procedures'', 18th International Technical Conference on the Enhanced Safety of Vehicles Conference (ESV), Paper No. 492, 2003.) Adopting the ES–2re and the injury assessment reference values associated with the risk of injury to an occupant's thorax, abdomen and pelvis will enhance the safety of occupants in side impacts.

h. Test Dummy Drawing Package

As set forth in the NPRM, the ES–2re test dummy is specified by way of a drawing package, parts list, user manual (PADI), and performance certification tests. The two-dimensional drawings and the PADI ensure that the dummies are the same in their design and construction. The performance certification tests serve to establish the uniformity of dummy assembly, structural integrity, consistency of impact response and adequacy of instrumentation. The repeatability of the dummy's impact response in vehicle certification tests is thereby ensured.

Both DATD and the Alliance expressed concerns regarding the lack of 3-dimensional (3–D) shape definitions and material specifications for the dummy. Additionally, FTSS and DATD suggested corrections to perceived errors present in the drawing package. These comments are addressed below.

1. 3–D Shape Definitions

DATD requested that NHTSA specify 3–D patterns, either physical or electronic, for all complex dummy parts. The Alliance contended that the ''current drawing package does not contain adequate detail for suppliers to manufacture comparable dummies. To allow multiple manufacturers to produce interchangeable parts and dummies with consistent performance, NHTSA must provide a drawing package that is sufficiently specific, including manufacturing tolerances. The drawing package for the ES–2re does not contain 3–D surface models.''

Agency Response: We are denying the request to provide three-dimensional patterns to specify the dummy. The ES–2re drawings are comparable in detail to all other dummies previously incorporated into 49 CFR part 572. No dummy specification in part 572 contains three-dimensional patterns. This is because three-dimensional patterns are unnecessary in inspecting whether the dummy is acceptable for use in an agency test. The agency finds two-dimensional drawing specifications sufficient to assure proper anthropometry, composition and assembly, and functionality of the dummy in designated crash tests.[18]

The drawing package sets forth the criteria that the agency uses to determine acceptability of the dummy through an inspection process. The drawing package alone is not sufficient to manufacture a dummy, or to ensure the interchangeability of parts between dummies manufactured by different business entities. Although the agency does not provide three-dimensional drawings, shape dimensions are provided in the form of surface widths, lengths, and circumferences. The drawing package specifies features that are important to establish the appropriate anthropometry and composition of the dummy. The test device is typically intended to be representative of a segment of an identified population, e.g., small adult females or mid-size adult males. Accordingly, the dimensions and mass of the dummy are specified to ensure that the dummy physically represents the population intended. The dimensions, mass distribution and range of motion of dummy parts are also specified to ensure that the kinematics of the test device in a crash test replicates that of the human occupant and to assure that the dummy's instrumentation performs as intended. The PADI document also provides procedures for a dummy's assembly and disassembly during inspection. The document insures that a dummy is assembled properly for conducting the tests.

The performance specifications that are set forth in 49 CFR part 572 establish the impact response requirements for the dummy. To determine the acceptability of a dummy, the dummy is inspected for its conformance to the drawing package and is tested according to the certification tests in part 572. The agency conducts impact tests for individual body segments and their assemblies, and on the dummy as a whole to determine acceptance. The impact calibration tests and associated instrumented measurements address the accuracy and consistency of dummy responses in crash events.

The two-dimensional drawings, PADI document and impact performance requirements enable the establishment of an objective, repeatable test device. Dummies reflecting the configuration of the parts and their assemblies contained in these drawings have been successfully used for the development and evaluation of occupant protection systems in a variety of simulated and full-scale crash tests. Use of the two-dimensional drawings limited to minimal but critical specifications affords dummy manufacturers an amount of flexibility to generate their own manufacturing and process drawings and to use whatever procedures are needed to facilitate production, which would be constrained if the drawings and other specifications were specified such as by use of three-dimensional patterns. Such restrictions in the design and production of the test dummy by government regulation is unnecessary, may impede technology development and manufacturing innovation, and may increase the costs of test dummies and crash tests. If manufacturers want more explicit design and manufacturing specifications and construction instructions to enable them to interchange parts among different test devices, the dummy manufacturers could work with or through technical societies and manufacturer associations to attain their desired objectives.

For the aforementioned reasons, the agency is not specifying three-dimensional patterns for the dummy parts.

2. Material Specifications

DATD stated that numerous drawings lacked sufficient specification of materials necessary to manufacture a reproducible dummy. DATD recommended that NHTSA provide performance-based specifications for all materials.

Agency Response: On Aug. 2, 2005, NHTSA met with representatives of DATD to allow the manufacturer to clarify their comments regarding the ES–2re drawing package. The DATD comments were provided electronically on August 22, 2005 in PDF format and have been submitted to the docket (reference NHTSA–2004–18864–33 and 34). NHTSA and DATD reviewed a number of drawings and DATD provided feedback to explain why the material specifications were inadequate. DATD stated that many of the material specifications listed in the NPRM drawing package referenced non-standard, European, and/or British material specifications. DATD recommended appending numerous material specifications with the qualifying phrase ''Or Equivalent.''

DATD is correct that many of the material specifications referenced European standards, in part due to the European origin of the ES–2re. Material suppliers in the United States typically do not certify their materials to meet the European standards. Thus, maintaining European specifications could potentially force U.S. dummy manufacturers to obtain materials at a higher cost.

Appending the material specifications with ''Or Equivalent,'' as DATD suggests, could potentially provide the dummy manufacturers with the opportunity to use alternate materials that are functionally equivalent to the European-specified materials. However, the agency is concerned that the phrase ''Or Equivalent'' is open to wide interpretation. For example, would the phrase ''Or Equivalent'' mean that two materials must have the same chemical structure or physical properties? What differences, if any, are allowed between two ''equivalent'' materials and how would differences be quantified? On the other hand, NHTSA is concerned about maintaining material specifications that cannot be readily satisfied by all of the dummy manufacturers. Further, NHTSA believes that dummy manufacturers, in the case of European-based material and surface finish specifications, should have some latitude in material selection based on functional, density and stiffness similarities, so long as the final

[18] Although two-dimensional drawing specifications are sufficient for agency rulemaking purposes, we will explore the feasibility of developing three-dimensional scans for future research and development purposes. Furthermore, for a period of 180 days following publication of this final rule, we will have available for public inspection two (2) of the ES–2re dummies used by the agency in the development of the rule. To make arrangements to inspect these dummies, contact Dr. Bruce Donnelly at NHTSA's Vehicle Research and Test Center, P.O. Box B37, East Liberty, Ohio, 43319, or by telephone at 1–800–262–8309.

product meets the drawing package specifications and dynamic certification requirements in 49 CFR Part 572.

To provide the flexibility for use of either European materials or U.S. based materials that meet the European specifications, the agency has changed the material ''requirements'' to material ''references.'' In this way, the drawing package can provide a starting point for material selection, but the materials referenced in the drawings are not required to be used as long as the materials used for the dummy provide functional, density and stiffness similarities enabling the device to meet the drawing package specifications and the dynamic performance requirements in the 49 CFR Part 572 certification tests. This is the case even if the materials used are not identical to the material references listed on the individual component drawings. Accordingly, the agency has changed all material and finish specifications to ''material reference'' and ''finish reference.''

3. Dummy Drawing Changes

DATD and FTSS suggested corrections or other changes to over 50 drawings in the ES–2re drawing package. Almost all of these were minor changes. The suggestions are discussed in detail in Appendix A to this preamble, ''Specific Drawing Comments and Agency Responses to Those Comments.'' NHTSA generally concurs with the recommended changes to the drawings, except for DATD's suggested change to Drawing 175–1010 on the upper neck load cell replacement, and FTSS's suggested change to Drawings 175–4040, –4041 and –4042 on damper springs. Appendix A explains the reasoning behind each of our decisions on the drawings.

i. Certification Procedures and Response Corridors

The performance certification tests in this final rule serve to assure that the ES–2re responses are within the established biomechanical corridors and further assure the uniformity of dummy assembly, structural integrity, consistency of response and adequacy of instrumentation. The tests ensure the repeatability of the dummy's impact response in vehicle compliance tests.

The agency proposed certification tests for components of the ES–2re dummy (for the head, neck, thorax, and lumbar spine) and tests for local areas (the shoulder, abdomen, and pelvis) of a fully assembled seated dummy. The agency also explored adopting a full-body thorax certification test in addition to or instead of individual rib module tests.

1. Overview of the Comments

The Alliance, DATD, FTSS and Autoliv commented on the proposed certification procedures and response corridors.

The Alliance stated that the Alliance and the Society of Automotive Engineers (SAE) Dummy Testing Equipment Subcommittee (DTESC) have agreed to accept, with minor suggested changes, the proposed tests for the head drop, shoulder, thorax (rib module drop test), and abdomen because the test protocols and corridors for those tests ''are essentially the same as those specified in the ECE–R95 European Side Impact Regulation.'' The Alliance stated that the SAE DTESC determined that it was necessary to establish a larger database of component certification data for the proposed neck pendulum, lumbar spine and pelvis tests, and solicited that ''committee members submit fairly recent and representative test data'' for these tests ''in order to establish a larger database that will better represent the certification performance of these components in the field.'' The Alliance provided the data that the SAE DTESC obtained, and supported the NPRM's proposed corridors and protocols for the neck pendulum, lumbar spine, and pelvis certification tests, as modified by the suggestions of the SAE DTESC. (Hereinafter, comments of the Alliance that reflect the SAE DTESC suggestions are referred to as comments of the ''Alliance/SAE.'')

In its comment, Denton ATD claimed that the certification corridors published in the NPRM do not adequately reflect lab-to-lab differences.

FTSS provided specific comments regarding the test procedures and corridors. Because FTSS participated in the SAE activities that resulted in that organization's recommended certification corridors which were submitted by the Alliance (i.e. the Alliance comments), the FTSS comments on certification corridors have been subsumed in the Alliance/SAE comments.

Regarding the proposal for a full-body thorax impact certification procedure, Autoliv, FTSS, and the Alliance expressed a preference to retain the individual rib drop certification tests.

General Agency Response: To develop the certification corridors set forth in the NPRM, NHTSA subjected two ES–2re dummies to certification type tests at the agency's Vehicle Research and Test Center (VRTC) laboratory. The certification response data submitted by the Alliance/SAE in docket comments are based on a much larger sample size than that used for the NPRM and are statistically more significant and representative of the dummies' response. Additionally, the Alliance/SAE data were collected at several test laboratories and thus reflect lab-to-lab differences. In most cases, the Alliance/SAE data are normally distributed and exhibit reasonable amounts of variation. For these reasons, the agency has accepted most of the suggested Alliance/SAE response corridors, particularly if the agency's data did not indicate contradictions or if the suggested corridors were consistent with the ECE ES–2 performance specifications. However, there were a few instances where analysis of the SAE data either revealed a non-normal distribution of the data set based on different dummy makes, or were in substantial contradiction with comparable agency measurements. In those cases the agency considerably reviewed and analyzed the data to determine if the varying distributions of the tested populations could be reconciled. If they could not be, the suggested corridor was not accepted.

2. Head Drop Test

The NPRM proposed that the nominal mass of the ES–2re head assembly is 4.0 kg and the tolerance is +/−0.2 kg. The Alliance/SAE was concerned that the +/−0.2 kg head mass tolerance on drawing 175–0000 (sheet 2 of 6) is too large.

Agency Response: We agree that the original tolerance for the head mass, as originally specified in the EU regulation, is too broad and needs to be revised. A review of other similarly sized dummies regulated by NHTSA shows that the Hybrid III small adult female dummy (49 CFR Part 572, Subpart O) has a nominal head mass of 3.73 kg and a tolerance of +/−0.05 kg, while the Hybrid III mid-sized adult male (49 CFR Part 572, Subpart E) has a nominal mass of 4.54 kg and a tolerance of +/−0.05 kg. To maintain consistency with the other similarly sized Part 572 dummies, we are adopting a mass tolerance of +/−0.05 kg for the head segment.

3. Neck Flexion Test

i. *Neck Response Corridors.* The Alliance/SAE recommended adopting the following criteria for the neck pendulum test shown in the Table 4, ''Alliance/SAE Suggested Neck Response Criteria,'' below (note: NPRM corridors are shown for comparison):

TABLE 4.–ALLIANCE/SAE SUGGESTED NECK RESPONSE CRITERIA

Criteria	Alliance/SAE proposal	NPRM
Max. Neck Flexion Angle	49–59 deg	52–57 deg.
Time at Max. Flexion Angle	54–66 ms	54–64 ms.
Time of Decay to Zero Angle from Peak	53–88 ms	55–75 ms.

Agency Response: The SAE DTESC database includes 189 tests of necks from both Denton ATD and FTSS, and tested in both right and left-side impact conditions.

The SAE DTESC data appear to be normally distributed for the first two criteria (maximum flexion angle and time of maximum flexion angle). Because the data are evenly distributed, and given that the Alliance/SAE's proposed corridors are based on a much more statistically significant sample size and therefore better represents the broader dummy population, we have adopted the suggested corridors for maximum flexion angle and time of maximum flexion angle. We note that these flexion angle and associated time requirements are consistent with the latest ECE regulations.[19]

The data for the time of decay criteria appear to exhibit two slightly different populations. Analysis of the decay time data reveals a difference in response between the FTSS and DATD samples. The DATD samples yielded an average decay time of 76.97 ms, while the FTSS samples had an average decay time of 60.38 ms, a difference of 21.6 percent in the average response. However, the decay time has less significance in the neck performance characterization than, for example, maximum neck flexion and time of maximum neck flexion. The latter is to assure that the neck, as a result of a specified impact, will deliver the head to a given location, whereas the former assures that the head does not remain in the fully flexed position and is capable of restitution to the pre-flexed position within a repeatable time frame.

The agency's test data on which the NPRM's neck response corridors were based used FTSS neck assemblies because those were the only samples available at the time. Accordingly, the agency data are somewhat more similar to the FTSS data. Since the DATD impact velocity was within the range of impact velocities specified in the NPRM, we conclude that the DATD decay time data are valid. The data supplied by the Alliance/SAE represent a larger sample size of necks from both FTSS and DATD, and therefore is more representative of the total dummy population. Accordingly, we agree to expand the performance corridor of the decay to zero angle from maximum flexion from 55–75 ms to 53–88 ms.

ii. *Neck Pendulum Aluminum Honeycomb.* The test procedure specifies that the neck-headform assembly is attached to a pendulum test fixture. Section 572.183(b)(3) referenced a ''Figure 15 of part 572'' in describing the pendulum accelerometer. Figure 15 specifies a 6-inch thickness of honeycomb. The Alliance/SAE noted that ''It is not clear that the proposed pulse can be achieved using a 6-inch thick piece of aluminum honeycomb.'' The commenter suggested that a 3-inch aluminum honeycomb thickness should be specified for the neck pendulum test.

Agency Response: We concur that the NPRM incorrectly referenced Figure 15. The Alliance/SAE is correct in stating that the proposed pulse cannot be achieved using a 6-inch thickness of honeycomb. As specified in the ECE regulations and confirmed by VRTC testing, a 3-inch thickness of honeycomb is needed to achieve the pulse. The correct reference is to Figure 22 in subpart E of 49 CFR Part 572. Figure 22 does not specifically identify the thickness of the aluminum honeycomb. This final rule makes the correction.

iii. *Neck Pendulum Deceleration Filter Class.* The Alliance recommended filtering the neck pendulum acceleration data at CFC 180, as opposed to CFC 60 as proposed in the NPRM.

Agency Response: We do not agree with this change. The preliminary certification procedures published by the dummy manufacturer, and used by the agency in its evaluation, specified a CFC 60 filter for the pendulum acceleration. All of the data gathered by NHTSA in its evaluations have been processed using CFC 60. This filter is consistent with that specified for the Hybrid III 50th male dummy in subpart E. In addition, the Alliance/SAE recommended corridors that this final rule adopts were based on data filtered at CFC 60.

iv. *Nodding Block Configuration.* The Alliance stated that the proposed regulatory text did not specifically mention the ability to change nodding joints[20] in the neck in the event that the neck does not meet the certification requirements. The Alliance stated: ''The different nodding joints for the ES–2re dummy are identified in the drawing package, but are not noted in the NPRM.''

Agency Response: The proposed regulatory text did not specifically note the ability to change nodding joints in the neck when the neck does not meet the certification requirements. However, the text specifically stated that, ''The neck assembly consists of parts shown in drawing 175–2000.'' Drawing 175–2000 (Neck Assembly) contains a note indicating that the buffers are to be selected based on the certification response of the neck. Thus the ability to change buffers to meet the certification requirements is available and no change to the regulatory text is necessary.

v. *Adjusting Half-Spherical Neck Screws.* A comment by the Alliance regarding the adjustment of the lumbar cable nut of the dummy (see section IV.h.5, *infra*) led NHTSA to determine that the regulatory text should specify how the two half-spherical screws located at either end of the ES–2re's neck should be tightened. Using the test procedures in the ES–2's user's manual, but adding to them to improve their objectivity, the agency has determined that the half-spherical screws should be tightened to a torque of 88 in-lbs using a special neck compression tool, a type of which is described in NHTSA drawing 175–9500.

4. Thorax

i. *Full-Body Systems Test.* The NPRM proposed that the dummy's thoracic response would be evaluated by testing each individual rib module mounted in a drop test fixture. It was proposed that each rib module would be disassembled from the dummy, mounted in a drop rig

[19] The NPRM had proposed to eliminate four of the neck test response criteria used by the ECE regulations: peak fore pendulum base angle, peak aft pendulum base angle, and their respective times at which the peak occurred. It is noted that the sum of the fore and aft base angles is equal to the maximum flexion angle, a response requirement maintained in the NPRM. In proposing to eliminate these minor requirements, NHTSA sought to simplify the certification requirements. NHTSA did not receive any comments objecting to the proposal. Accordingly, the approach of the NPRM is adopted.

[20] We assume that the ''nodding joints'' noted in the Alliance comment refers to ''neck buffers'' since the ES–2 series dummies do not have nodding joints in the neck assemblies.

fixture, and impacted in free fall by an impactor with a mass of 7.78 kg. The impactor would be dropped from a height of 459 and 815 mm to produce impact speeds of 3.0 m/s and 4.0 m/s, respectively. The response criteria established the minimum and maximum deflection of the rib at each impact speed. For each rib (upper, middle, and lower rib), the proposed rib deflection for the 3.0 m/s impact would be 36 to 40 mm, and for the 4.0 m/s impact 46.0 to 51.0 mm.

The agency also explained that it was considering, in addition to or in lieu of the rib drop test, a test that addresses the performance of the thorax of the dummy as a complete system. The agency developed a test in which the thorax of a seated dummy is impacted by a pendulum at a specified impact speed. The proposed procedure was described in a report entitled, ''Development of a Full-Body Thorax Certification Procedure and Preliminary Response Requirements for the ES–2re Dummy, September 2004'' (in Docket 18864). A rib deflection range would be specified as part of the test requirements. The agency stated in the NPRM that a ''systems'' test of the thorax is used in calibration tests of all frontal impact and side impact dummies currently specified in 49 CFR part 572.

Autoliv, FTSS, and the Alliance preferred the individual rib drop certification tests and did not support the full-body thorax impact test. FTSS commented that the proposed 6.7 meters per second (m/s) impact velocity was ''a severe test and the hard face of the pendulum is likely to reduce the effective life of the foam material bonded to the ribs.'' FTSS recommended that a more appropriate impact speed than the proposed 6.7 m/s impact velocity would be in the range of 5.0 m/s to 6.0 m/s. FTSS also expressed concern that the systems test could allow too much variation in individual rib performance. ''The individual rib could have differing stiffnesses, but meet the specifications of the whole body test. This can result in higher variability and limit the accuracy of the ES–2re to discern local hard spots in the vehicle interior and structure.'' The Alliance stated that the individual rib drop test procedure ''was well established and appropriate for characterizing the performance of individual rib modules.''

Agency Response: NHTSA believes that a thorax systems test is important to assess that the final assembly of the dummy is correct. The test procedures for the Hybrid III, SID, WorldSID, and SID–IIs crash test dummies employ a thorax systems test, and so too should those of the ES–2re to further check the assemblage of the dummy. However, the test procedures for full-body thorax impacts of the SID, WorldSID, and SID–IIs side impact dummies employ a thorax impact speed of 4.3 m/s, as compared to the 6.7 m/s impact speed proposed in the NPRM for the ES–2re. After reviewing the comments, NHTSA has concluded that the impact severity proposed in the NPRM was at too high a severity (being much higher than that for other side impact dummy thoracic certifications).

In response to the comments, the agency conducted a study to determine the appropriate velocity for the test. The agency's follow-on study is discussed in a technical report entitled, ''Development of a Reduced Severity Full-Body Thorax Certification Procedure and Response Requirements for the ES–2re Dummy,'' (December 2005) (copy in the docket for this final rule, Docket 25441). Impact speeds of 4.3 m/s, 5.0 m/s, 5.5 m/s and 6.0 m/s were evaluated.

NHTSA has concluded from the test series and analysis that the appropriate impact speed should be 5.5 m/s. Because the test is to assure the integrity of the dummy's thorax in the FMVSS No. 214 crash tests, the agency determined that the test should use an impact speed that resulted in rib deflections near the magnitude of the proposed injury criteria for the ES–2re dummy (44 mm) in the FMVSS No. 214 final rule. The test speed of 5.5 m/s resulted in peak displacements of 41.9 mm for the lower rib, 43.6 mm for the middle rib, and 40.3 mm for the upper rib. Considering that the agency also sought to reduce the test severity from that which was proposed to a speed comparable to that used in thorax systems tests of other crash test dummies, it was concluded that the rib responses of the ES–2re were satisfactorily close to the desired displacement target. (The 5.5 m/s test speed reduced the kinetic energy imparted to the dummy through the impactor by approximately 33 percent.) The 5.5 m/s speed also was within the range suggested by FTSS in its comments to the NPRM.

We have also determined that the thorax systems test should be in addition to the individual rib module drop test. The individual rib module drop test would be retained because, as FTSS noted, the test could discern anomalies with individual ribs that the thorax systems test might not detect.

ii. *Specifying Impact Speed in Rib Module Drop Test.* The Alliance and FTSS expressed concern with specifying impact velocity as opposed to drop height in the rib module drop test procedure. FTSS noted, ''traditional velocity measurement methods in a dummy lab use speed vanes attached to the impactor and static light traps. This system works well for pendulum type impactors because the pendulum has approached a constant velocity at the bottom of its swing at the point of contact. However, a vertical drop (impactor) is still accelerating (at the instant it would pass through a traditional speed measuring device).'' Thus, it would not be possible to accurately measure speed at the instant of impact in a drop test.

Agency Response: The agency agrees with the FTSS analysis. Specifying a drop height facilitates the accuracy of the procedure. Section 572.185 of the regulatory text specifies that each rib is tested at two impactor drop heights, 815 ±8 mm and 459 ±5 mm.

iii. *Recovery Time Between Successive Tests.* The Alliance noted that the NPRM did not specify a recovery time between successive rib module drop tests. The Alliance recommended ''adopting a five (5) minute rib module recovery time between changes in velocity and a thirty (30) minute rib module recovery time between velocity sequences (as are called out in the ECE–R95 Regulation).''

Agency Response: NHTSA agrees that the test procedures should specify a recovery time between tests. In conducting its own research to evaluate the certification test procedures and performance corridors, NHTSA allowed a five-minute recovery time between changes in velocity (drop height) when testing a given rib module in a test cycle. If a test cycle had to be repeated on a given rib module, a recovery time of 30 (thirty) minutes was allowed between successive applications of the test cycle. These provisions have been added to the rib module drop test procedures.[21]

5. Lumbar Spine

The lumbar spine test involves attaching a lumbar spine/headform assembly to the bottom of a pendulum and releasing the pendulum from a height sufficient to allow it to fall freely to achieve an impact velocity of 6.05±0.1 m/s. (The headform is a

[21] We note that the proposed test procedures in the NPRM did not specify a recovery time for any successive tests with the same component, even though recovery times are always employed in dummy test procedures. We have adopted a provision in section 572.189 of the regulatory text of this final rule that states that certification tests of the same component, segment, assembly, or fully assembled dummy shall be separated in time by a period of not less than 30 minutes unless otherwise specified.

convenient and available ballast from the neck pendulum test set-up to evaluate the consistency of lumbar spine flexion properties.) The pendulum deceleration pulse is to be characterized in terms of its change (decrease) in velocity as obtained by integrating the pendulum accelerometer output. The lumbar spine must meet specified limits on the maximum lumbar spine flexion angle, time period in which maximum lumbar flexion angle must occur, and the time required for the lumbar flexion angle to decay to zero after peak.

i. *Response Corridors.* The Alliance/SAE recommended adopting the following criteria for the lumbar spine pendulum test in Table 5, ''Suggested Lumbar Response Criteria,'' below (note: NPRM corridors are shown for comparison):

TABLE 5.—SUGGESTED LUMBAR RESPONSE CRITERIA

Criteria	Alliance/SAE proposal	NPRM
Max. Lumbar Flexion Angle	45–55 deg	45–55 deg.
Time at Max. Flexion Angle	39–53 ms	39–53 ms.
Time of Decay to Zero Angle from Peak	37–56 ms	40–65 ms.

Agency Response: The SAE DTESC database includes 123 tests of necks from both FTSS and Denton ATD. The agency data base has been expanded since the NPRM to at least 25 sets of certification tests (see Supplement to the Technical Report: Design, Development, and Evaluation of the ES–2re Crash Test Dummy, November 2005; Docket 25441).

The Alliance/SAE data appear to be normally distributed and reflect reasonably similar dispersions between the two dummy makes, particularly for the first two criteria (maximum lumbar flexion angle and time of maximum lumbar flexion angle). The analysis of these data confirmed a good match with the agency data and the proposed performance corridors of 45–55 degrees for maximum flexion angle and 39–53 ms for time at maximum flexion angle.

On the other hand, the Alliance/SAE data for time to decay from peak angle to zero are somewhat separated in clusters: one for FTSS dummies being shorter in time and the other for Denton dummies being longer. The Alliance/SAE suggested through the Alliance comment that a 37.1–55.8 ms decay time corridor was appropriate, based on plus or minus two standard deviations of the combined data sets. Analysis of the agency's enlarged data set, based on two FTSS dummies, revealed that it matches nearly perfectly at +/−3 standard deviations the SAE DTESC suggested calibration corridor at the lower end of the limit (37 ms) and falls well within the corridor at the upper end at 46 ms. This dispersion confirmed the adequacy of the Alliance/SAE data set for analysis of the FTSS dummy. Inasmuch as the agency did not have any Denton dummies to establish their dispersion range, it had to use the SAE DTESC Denton-based data to establish the upper end of the corridor. Statistical analysis of the Denton dummy data revealed that its upper limit should to be set at 57 ms (56.8 ms rounded off). In summary, time of decay criteria from peak angle to zero angle is revised from the proposed 40–65 ms range to 37–57 ms. The limit of 37–57 ms agrees with the limits derived by combining response data from all dummies regardless of their make or test facility.[22]

ii. *Lumbar Cable Nut Adjustment.* The Alliance noted that the NPRM did not specify how the lumbar cable nut is adjusted, and recommended that a cable adjustment procedure should be specified since this is common practice for other dummy types that have neck and lumbar components that contain a cable and tensioning nut configuration.

Agency Response: The agency agrees with the suggestion. Historically, it has been common practice for NHTSA to specify torque requirements in 49 CFR Part 572 for fasteners that may potentially play a critical role in the certification responses. The neck test procedures for the Hybrid III 50th percentile male, 5th percentile adult female, six-year-old child, and three-year-old child all contain adjustment torque requirements for the cable nut.

The agency has reviewed the ES–2 User's Manual provided by the manufacturer and which was used by VRTC in performing its evaluation of the ES–2re states. The manual specifies that ''* * * the nut should be tightened hand tight and further tightened with two complete turns of the nut * * *.'' Using this procedure, but adding to it to enhance its objectivity, we have determined that the lumbar hex nut (part number 9000057) should be tightened to a torque of 50 +/−5 in-lbs. We have added this specification to the test procedure for the lumbar spine test (section 572.187(b)(2) of the regulatory text of this final rule).

6. Shoulder

The impact test is performed on the shoulder area of a fully assembled, seated dummy. A 49 CFR Part 572, Subpart E pendulum (23.4 kg) impacts the dummy laterally (the dummy's midsagittal plane is perpendicular to the direction of impact). The impactor swings freely to impact the dummy's upper arm pivot at a velocity of 4.3 m/s. The shoulder passes the test if the peak acceleration of the impactor is between 7.5 and 10.5 g.

i. *Shoulder Cord Tension.* In its comments, the Alliance stated that ''the ECE–R95 regulation applies a 27.5 to 32.5 N chord tension specification for the elastic shoulder cords. This setting should be included in the Part 572 test procedure since it is critical to the test.''

Agency Response: We have agreed to the recommendation, with modification. We conducted the shoulder impact test using the proposed procedures, including the shoulder cord tension specification of 27.5 to 32.5 N. In our assessment, one aspect of the ECE–95 regulation needed to be more objective. The October 1, 2004 revision of ECE–R95 specifies in Section 5.7.1.: ''The length of the elastic cord should be adjusted so that a force between and including 27.5 and 32.5 N applied in a forward direction 4 +/−1 mm from the outer edge of the clavicle in the same plane as the clavicle movement, *is required to move the clavicle forward.*'' [Emphasis added.] We have modified the highlighted phrase to state: ''* * * '' is required to initiate a forward motion of 1 to 5 mm.'' The modified statement is more specific and objective.

ii. *Pendulum Configuration.* FTSS commented that it does not recommend the use of an 8-wire pendulum system for conducting the shoulder impact certification test. FTSS stated, ''We have tested with both a 4-wire and 6-wire

[22] The NPRM had proposed to eliminate four of the lumbar test response criteria used by the ECE regulations: peak fore pendulum base angle, peak aft pendulum base angle, and their respective times at which the peak occurred. In proposing to eliminate these requirements, NHTSA sought to simplify the certification requirements. NHTSA did not receive any comments objecting to this proposal. Accordingly, the approach of the NPRM is adopted.

pendulum suspension system, and did not measure a detectable difference (in response). We do not recommend the use of an 8-wire system which over-constrains the lateral motion of the pendulum which is a factor in the shoulder test.''

Agency Response: In the NPRM, NHTSA provided specifications for the impact probe's mass, geometry, and inertial properties and did not specify the configuration of the suspension cables. This final rule does not specify the configuration of the suspension cables because we do not believe that the configuration will affect the results of the certification tests. The configuration of the suspension cables is not specified in other 49 CFR Part 572 test dummy regulations as the impactor could also be a linear impact probe.[23]

7. Abdomen

This calibration test is performed on a fully assembled, seated dummy. The abdomen has to meet performance requirements when impacted laterally at 4.0 m/s by a 49 CFR Part 572, Subpart E, 23.4 kg pendulum. Figure U5–A of the proposed regulatory text described the pendulum's impact face material as ''rigid.''

FTSS commented that most dummy labs use a bolt-on interface attached to the standard thorax pendulum. The commenter stated that, to conform to the weight specification for the pendulum, it typically uses a material of lower density than the aluminum used for the main pendulum. FTSS stated that it has observed differences in the pendulum acceleration depending on the choice of material used for the interface and further believes a specification of ''rigid'' is too vague. FTSS recommended that the agency specify the material for the abdomen probe face as ''Delrin.''

Agency Response: We used the term ''rigid'' to describe the impactor face to specify a material that was harder than that being struck (i.e., the dummy's abdomen). However, we concur that the impactor face should be more fully specified. NHTSA used a Delrin impactor face to conduct the abdominal tests. Rather than specifying a particular brand of plastic or using the term ''rigid'' in describing the impactor face, this impactor is characterized in this rule in the following manner.

The abdomen impactor is the same as specified in § 572.189(a) except that on its impact surface is firmly affixed a special purpose rectangular shaped block whose weight is 1.0 +/-0.01 kg. The block is 70 mm high, 150 mm wide and 60 to 80 mm deep. The impact surface is flat, has a minimum Rockwell hardness of M85, and an edge radius of 4 to 5 mm.

8. Pelvis

This calibration test is performed on a fully assembled, seated dummy. The dummy pelvis is impacted by the 49 CFR Part 572, Subpart E, 23.4 kg pendulum at a velocity of 4.3 m/s. The NPRM proposed certain minimum and maximum limits on the impact force measured by the pendulum accelerometer and on the pubic force measured by the dummy.

The Alliance commented on the pelvis impact response corridors, recommending criteria for the pelvis impact test based on SAE DTESC data from 111 tests conducted with dummies from both Denton ATD and FTSS. The commenter suggested the following criteria for the pelvis impact test in Table 6, ''Suggested Pelvis Response Criteria,'' below (note: NPRM corridors are shown for comparison):

TABLE 6.—SUGGESTED PELVIS RESPONSE CRITERIA

Criteria	Alliance proposal	NPRM
Max. Impactor Force	4.7–5.4 kN	4.8–5.5 kN.
Time at Max Impactor Force	11.8–16.1 ms	10.3–15.5 ms.
Peak Pubic Symphysis Load	1.23–1.59 kN	1.31–1.49 kN.
Time at Peak Pubic Symphysis Load	12.2–17.0 ms	9.9–15.9 ms.

Agency Response: The SAE DTESC data appear to be normally distributed. Because the data are evenly distributed, and given that the Alliance/SAE's suggested corridors are based on a more statistically significant sample size and wider impact speed distribution than that used for the NPRM, the agency agrees that the Alliance proposal reflects a more representative response of a broader dummy population. Accordingly, the Alliance's suggested corridors are incorporated into this final rule. Review of the NHTSA data used to support the NPRM corridors indicates that all responses would meet the commenter's suggested corridors.

9. Other Issues

i. *Test Probe Suspension Cables and Attachments.* FTSS recommends adding additional specifications to the test probe used in the shoulder, abdomen, and pelvis impacts, as follows:

- Mass moment of inertia shall be greater than 9000 kg-cm^2
- Natural frequency shall be greater than 1000 Hz
- The weight of 1/3 of the suspension cables should be added to the pendulum weight
- Cable attachment hardware should not exceed 5% of the total pendulum weight
- Suspension cables shall not interfere with the dummy during the test

Agency Response: The suggested specifications for mass moment of inertia and natural frequency were proposed in § 572.189(a) of the NPRM and are adopted in this final rule. NHTSA agrees with adding the latter suggested specifications. As noted by the commenter, the provisions are typically part of the regulations for test dummies adopted in recent years (e.g., 49 CFR Part 572, Subpart O, Hybrid III 5th Percentile female frontal test dummy). Including the weight of ⅓ of the suspension cables prevents the use of unusually heavy suspension cables, which could affect the response of the dummy. The last provision will help eliminate a potential source of variability. We have clarified in the regulatory text (§ 572.189(a)) that ''No suspension hardware, suspension cables, or any other attachments to the probe, including the velocity vane, shall make contact with the dummy during the test.''

ii. *Pelvis and Abdomen Pendulum Filter Requirements.* Section 572.189(k)(1) specified using an SAE J211 CFC 60 filter for the pendulum acceleration of the pelvis impact test. The correct specification is to a CFC 180

[23] It is noted that, in response to a comment from FTSS, this final rule limits the overall weight of the suspension cables and specifies that the weight of the suspension cables is included in calculating the total impactor mass. These specifications and others are discussed in section IV.h.9 of this preamble.

filter. NHTSA used a CFC 180 filter for the pendulum acceleration of the pelvis impact test. This final rule makes the correction.

iii. *Temperature.* The NPRM explained that, while the 18° C to 26° C (64.4° F to 71.6° F) temperature range is specified for the EuroSID–1 by EU in 96/27/EC and for the ES–2 by EEVC in EuroNCAP side impact tests, NHTSA tentatively concluded that the ES–2re's temperature at the time of calibration, sled and full scale crash tests be in the range of 20.6° C to 22.2° C (69° F to 72° F). This temperature range is specified for all NHTSA Hybrid III series and SID/HIII dummies, and, NHTSA stated, reduces the variability of the dummy's impact response due to temperature sensitivity of damping and rubber and plastic materials used within the dummy.

The Alliance found the proposal to be acceptable. No commenter opposed it. Accordingly, this final rule adopts the specification.

V. NHTSA Crash Test Experience

The agency conducted a series of vehicle crash tests utilizing a broad variety of passenger vehicles. The test program method and results are discussed in detail in a technical report entitled, ''NHTSA Fleet Testing for FMVSS 214 Upgrade, MY 2004–2005, January 2006,'' which has been placed in the docket for the final rule published today (Docket 25441).

The objectives of the test program were to evaluate the dummy's responses in different loading conditions with respect to the injury assessment reference values (IARV) proposed in the May 17, 2004 NPRM on FMVSS No. 214, to assess the dummies' durability, and to investigate the crashworthiness characteristics of a broad range of fleet vehicles. The series consisted of fourteen FMVSS No. 214 vehicle-to-pole tests and seven moving deformable barrier (MDB) tests. In the MDB tests, ES–2re dummies were seated in both the driver and rear passenger positions, resulting in 14 total MDB exposures with ES–2re dummies.

Each dummy was instrumented with load cells, accelerometers, and potentiometers as listed in Table 7, ''Instrumentation and Filter Classes,'' below.

TABLE 7.—INSTRUMENTATION AND FILTER CLASSES

Location	Type instrument	Measurement	Direction	CFC	Total channels
Head (9-array)	accelerometers	Acceleration	X, Y, Z	1000	9
Upper Neck	load cell	Force	X, Y, Z	1000	3
		Moment	X, Y, Z	600	3
Lower Neck	load cell	Force	X, Y, Z	1000	3
		Moment	X, Y, Z	600	3
Shoulder	load cell	Force	X, Y, Z	600	3
Upper Spine (T01)	accelerometers	Acceleration	X, Y, Z	180	3
Lower Spine (T12)	accelerometers	Acceleration	X, Y, Z	180	3
Ribs (upper, middle, lower)	potentiometers	Displacement	Y	180	3
	accelerometers	Acceleration	Y	180	3
Back Plate	load cell	Force	X, Y	600	2
		Moment	Y, Z	600	2
T–12	load cell	Force	X, Y	600	2
		Moment	X, Y	600	2
Lumbar	load cell	Force	Y, Z	600	2
		Moment	X	600	1
Abdomen (front, middle, rear)	load cell	Force	Y	600	3
Pubic Symphysis	load cell	Force	Y	600	1
Pelvis	accelerometers	Acceleration	X, Y, Z	1000	3
Femurs, Left and Right	load cell	Force	X, Y, Z	600	3
		Moment	X, Y, Z	600	3

Table 8, ''Full Scale Vehicle Test Matrix,'' below, describes the vehicle test matrix. All vehicles were 2005 model year versions, unless otherwise noted. Vehicles were selected to reflect a broad range of sizes and masses. Note that the Dodge 2500 Ram Pickup test was repeated, with the air bag being deployed manually in the second test (denoted as Dodge 2500–B).

TABLE 8.—FULL-SCALE VEHICLE TEST MATRIX

Vehicle	Side air bag type [1]	Oblique pole	MDB
Toyota Corolla	C + T	√	√
VW Jetta	C +T	√	√
Saturn Ion	C	√	√
Honda Accord (MY 2004)	C +T	√	√
VW Beetle Convertible	H + T	√	
Saab 9–3 Convertible	H + T	√	
Ford 500	C + T	√	√
Toyota Sienna (MY 2004)	C + T	√	
Subaru Forester	H + T	√	√
Honda CRV	C + T	√	√
Chevy Colorado	C	√	
Ford Expedition	C	√	
Dodge 2500–A	C	√	

TABLE 8.—FULL-SCALE VEHICLE TEST MATRIX—Continued

Vehicle	Side air bag type [1]	Oblique pole	MDB
Dodge 2500–B	C	√	

[1] Side Air Bag Types: C = Curtain; H = Head; T = Torso

a. MDB Tests

Seven vehicles were tested in the FMVSS No. 214 MDB test mode with one ES–2re dummy seated in the driver's position and one in the left rear passenger's position. All of the measured responses for both the driver and rear occupant were below the proposed IARV limits. Only two measurements, rib deflection of the driver in the Honda CRV and Honda Accord, were greater than 80 percent of the proposed limits.

b. Oblique Pole Tests

Fourteen vehicles were tested in the proposed FMVSS 214 oblique pole impact mode. For this test, the ES–2re dummy is seated in the driver's position with the seat in mid-position and the dummy's head CG aligned with the center of the pole.

The HIC_{36} measurement exceeded the proposed limits in two of the tests (Subaru Forester and Dodge 2500–A) and was greater than 80 percent of the proposed limit in another (Saturn Ion). In the Subaru test, the air bag deployed but the head portion of the bag was directed towards the rear of the dummy and offered minimal protection to the dummy's head. In the Dodge 2500–A test, the air bag did not deploy; the test was subsequently repeated and the curtain air bag was manually deployed.

The ES–2re's rib deflection response exceeded the proposed limit in seven of the tests (Toyota Corolla, Saturn Ion, Honda CRV, Chevy Colorado, Dodge 2500–A and B, and Toyota Sienna) and was greater than 80 percent of the proposed limit in five other tests (VW Jetta, VW Beetle, Saab 9–3, Ford 500, and Subaru Forester).

The ES–2re's total abdomen force exceeded the proposed limit in four tests (Ford 500, Chevy Colorado, Dodge 2500–B, and Ford Expedition).

c. Rib Responses

The rib module design incorporated into the ES–2re was developed in response to concerns over of the EuroSID and ES–2 dummy's ribs binding. The rib binding was previously observed as a plateau in the rib's displacement-time history at peak deflection and has been referred to as ''flat-topping.'' The concern with rib flat-topping is that it would limit the ribs from full compression even under large loading conditions.

The rib response curves for all of the MDB and oblique pole impacts tests were analyzed to determine if any rib flat-topping occurred. There was no evidence of rib flat-topping in the test series.[24]

d. Torso Back Plate Responses

Another area of concern with the ES–2 dummy configuration was that of the torso back plate interacting with the vehicle seat frame. When this occurred, loads were transferred directly to the spine, preventing the load from being applied laterally to the rib cage, and thus potentially reducing the rib displacements. This undesirable feature is referred to as ''back plate grabbing.'' The rib extensions and narrow, curved back plate of the ES–2re were designed to address this issue.

In order to assess back plate-to-seat back interaction in the crash tests, torso back plate responses were monitored. A large positive y-component of the back plate force indicates that the back plate was experiencing a laterally inboard-directed force due to back plate-to-seat back interaction. In previous agency crash testing with the ES–2 (without rib extensions and narrow back plate) in which back plate-to-seat back interaction was observed, positive y-component back plate loads in the range of 5,000–12,000 N were recorded. Table 9, ''Peak Positive Lateral Back Plate Loads,'' below, summarizes the peak positive y-component of the back plate loads for the MDB and oblique pole tests.

TABLE 9.—PEAK POSITIVE LATERAL BACK PLATE LOADS

Vehicle	Positive Y-Component of Back Plate Load (N)		
	Oblique Pole	MDB	
	Driver	Driver	Passenger
Toyota Corolla	78	65	16
VW Jetta	81	62	80
Saturn Ion	226	158	105
VW Beetle Convertible	32		
Saab 9–3 Convertible	71		
Ford 500	41	118	4
Subaru Forrester	61	64	59
Honda CRV	588	203	29
Chevy Colorado	108		
Ford Expedition	20		
Dodge 2500–A	114		
Dodge 2500–B	32		
Honda Accord	51	182	40

[24] Non-normal rib deflection responses were noted in the Saturn Ion pole test. However, it was subsequently determined that the rib potentiometers had been incorrectly installed in the dummy's rib modules. This assembly error left the rib potentiometers with a reduction in the amount of available displacement. When assembled properly, the pots can provide 60 mm of free travel, whereas post-test inspection of the dummy indicated the assembly error had reduced the free travel to 48–50 mm of displacement. Deflection measurements up to 48–50 mm were still accurate for this test.

TABLE 9.—PEAK POSITIVE LATERAL BACK PLATE LOADS—Continued

Vehicle	Positive Y-Component of Back Plate Load (N)		
	Oblique Pole	MDB	
	Driver	Driver	Passenger
Toyota Sienna	103	.....	.....

As Table 9 indicates, the magnitude of the peak positive lateral back plate loads was very low and indicates that back plate grabbing did not occur.

e. Durability

As discussed above in section IV of this preamble, no significant durability problems were observed with the ES–2re dummies used in the NHTSA crash tests.

In conclusion, the ES–2re dummy performed in a satisfactory manner and demonstrated its usefulness as a test instrument in actual FMVSS No. 214 testing.

VI. Conclusions

For the aforementioned reasons, NHTSA has decided to amend 49 CFR Part 572 by adding design and performance specifications for the ES–2re 50th percentile adult male side impact dummy. The improved biofidelity and injury assessment capability of the ES–2re over other commercially available test dummies will enhance the assessment of the risk of injury in side impacts over that previously possible, particularly in side crashes involving the possibility of head or abdominal injury. Further, adopting the ES–2re into 49 CFR Part 572 is a step toward harmonizing our regulations internationally. The European New Car Assessment Program (EuroNCAP) on side impact uses the ES–2 dummy with the injury criteria specified in EU 96/27/EC. The agency is also cognizant of the efforts of the safety community to complete the evaluation of the WorldSID for side impact evaluation. By adopting the ES–2re at the present time, the agency is not precluding the incorporation of the WorldSID dummy. Furthermore, the agency is participating in the WorldSID's evaluation, and is committed to proposing the incorporation of harmonized 5th and 50th percentile dummies into the standard when the dummy development and evaluation are complete. Nonetheless, today's final rule ensures that the important gains in occupant protection that can be achieved by the ES–2re will not be delayed or lost pending completion of that evaluation.

Rulemaking Analyses and Notices

Executive Order 12866 and DOT Regulatory Policies and Procedures

Executive Order 12866, ''Regulatory Planning and Review'' (58 FR 51735, October 4, 1993), provides for making determinations whether a regulatory action is ''significant'' and therefore subject to Office of Management and Budget (OMB) review and to the requirements of the Executive Order. This rulemaking action was not considered a significant regulatory action under Executive Order 12866. This rulemaking action was also determined not to be significant under the Department of Transportation's (DOT's) regulatory policies and procedures (44 FR 11034, February 26, 1979). The cost of an uninstrumented ES–2re is in the range of $54–57,000. Instrumentation adds approximately $43–47,000 for minimum requirements and approximately $80–84,000 for maximum instrumentation to the cost of the dummy.

This document amends 49 CFR Part 572 by adding design and performance specifications for a 50th percentile adult male side impact dummy that the agency will use in research and in compliance tests of the Federal side impact protection safety standards. This 49 CFR Part 572 final rule does not impose any requirements on anyone. Businesses would be affected only if they choose to manufacture or test with the dummy. Because the economic impacts of this final rule are minimal, no further regulatory evaluation is necessary.

Regulatory Flexibility Act

Pursuant to the Regulatory Flexibility Act (5 U.S.C. 601 et seq., as amended by the Small Business Regulatory Enforcement Fairness Act (SBREFA) of 1996), whenever an agency is required to publish a proposed or final rule, it must prepare and make available for public comment a regulatory flexibility analysis that describes the effect of the rule on small entities (i.e., small businesses, small organizations, and small governmental jurisdictions), unless the head of the agency certifies the rule will not have a significant economic impact on a substantial number of small entities. The Small Business Administration's regulations at 13 CFR Part 121 define a small business, in part, as a business entity ''which operates primarily within the United States.'' (13 CFR 121.105(a)).

We have considered the effects of this rulemaking under the Regulatory Flexibility Act. I hereby certify that this rulemaking action will not have a significant economic impact on a substantial number of small entities. This action will not have a significant economic impact on a substantial number of small entities because the addition of the test dummy to Part 572 will not impose any requirements on anyone. NHTSA will not require anyone to manufacture the dummy or to test vehicles with it.

National Environmental Policy Act

NHTSA has analyzed this final rule for the purposes of the National Environmental Policy Act and determined that it will not have any significant impact on the quality of the human environment.

Executive Order 13132 (Federalism)

Executive Order 13132 requires agencies to develop an accountable process to ensure ''meaningful and timely input by State and local officials in the development of regulatory policies that have federalism implications.'' ''Policies that have federalism implications'' is defined in the Executive Order to include regulations that have ''substantial direct effects on the States, on the relationship between the national government and the States, or on the distribution of power and responsibilities among the various levels of government.''

NHTSA has analyzed this amendment in accordance with the principles and criteria set forth in Executive Order 13132. The agency has determined that this final rule does not have sufficient federalism implications to warrant consultation and the preparation of a Federalism Assessment.

Civil Justice Reform

This final rule would not have any retroactive effect. Under 49 U.S.C. 30103, whenever a Federal motor

vehicle safety standard is in effect, a State may not adopt or maintain a safety standard applicable to the same aspect of performance which is not identical to the Federal standard, except to the extent that the state requirement imposes a higher level of performance and applies only to vehicles procured for the State's use. 49 U.S.C. 30161 sets forth a procedure for judicial review of final rules establishing, amending, or revoking Federal motor vehicle safety standards. That section does not require submission of a petition for reconsideration or other administrative proceedings before parties may file suit in court.

Paperwork Reduction Act

Under the Paperwork Reduction Act of 1995, a person is not required to respond to a collection of information by a Federal agency unless the collection displays a valid control number from the Office of Management and Budget (OMB). This final rule does not have any requirements that are considered to be information collection requirements as defined by the OMB in 5 CFR Part 1320.

National Technology Transfer and Advancement Act

Section 12(d) of the National Technology Transfer and Advancement Act of 1995 (NTTAA), Public Law 104–113, section 12(d) (15 U.S.C. 272) directs NHTSA to use voluntary consensus standards in its regulatory activities unless doing so would be inconsistent with applicable law or otherwise impractical. Voluntary consensus standards are technical standards (e.g., materials specifications, test methods, sampling procedures, and business practices) that are developed or adopted by voluntary consensus standards bodies, such as the Society of Automotive Engineers (SAE). The NTTAA directs us to provide Congress, through OMB, explanations when we decide not to use available and applicable voluntary consensus standards.

The following voluntary consensus standards have been used in developing the ES–2re dummy:

- SAE Recommended Practice J211, Rev. Mar95 ''Instrumentation for Impact Test'' and
- SAE J1733 of 1994–12, ''Sign Convention for Vehicle Crash Testing.''

Unfunded Mandates Reform Act

Section 202 of the Unfunded Mandates Reform Act of 1995 (UMRA), Pub. L. 104–4, Federal requires agencies to prepare a written assessment of the costs, benefits, and other effects of proposed or final rules that include a Federal mandate likely to result in the expenditure by State, local, or tribal governments, in the aggregate, or by the private sector, of more than $100 million annually (adjusted for inflation with base year of 1995). Before promulgating a NHTSA rule for which a written statement is needed, section 205 of the UMRA generally requires the agency to identify and consider a reasonable number of regulatory alternatives and adopt the least costly, most cost-effective, or least burdensome alternative that achieves the objectives of the rule.

This final rule will not impose any unfunded mandates under the UMRA. This rule does not meet the definition of a Federal mandate because it does not impose requirements on anyone. It amends 49 CFR Part 572 by adding design and performance specifications for a side impact dummy that the agency will use to evaluate manufacturers' compliance with applicable Federal safety standards and for research purposes. This rule affects only those businesses that choose to manufacture or test with the dummy. It does not result in costs of $100 million or more to either State, local, or tribal governments, in the aggregate, or to the private sector.

Plain Language

Executive Order 12866 requires each agency to write all rules in plain language. Application of the principles of plain language includes consideration of the following questions:

—Has the agency organized the material to suit the public's needs?
—Are the requirements in the rule clearly stated?
—Does the rule contain technical language or jargon that is not clear?
—Would a different format (grouping and order of sections, use of headings, paragraphing) make the rule easier to understand?
—Would more (but shorter) sections be better?
—Could the agency improve clarity by adding tables, lists, or diagrams?
—What else could the agency do to make this rule easier to understand?

If you have any responses to these questions, please write to us about them.

Regulation Identifier Number

The Department of Transportation assigns a regulation identifier number (RIN) to each regulatory action listed in the Unified Agenda of Federal Regulations. The Regulatory Information Service Center publishes the Unified Agenda in April and October of each year. You may use the RIN contained in the heading at the beginning of this document to find this action in the Unified Agenda.

Appendix A to Final Rule Preamble: Specific Drawing Comments and Agency Responses to Those Comments

Drawing 175–0000, Sheet 2, EuroSID 2 With Rib Extensions

Issue: With regard to the center of gravity table for the head, the vertical CG direction is incorrectly specified. FTSS recommends that ''Y'' be replaced with ''Z.''

Analysis and Response: FTSS has correctly identified a minor error in drawing 175–0000, sheet 2. The correct label is ''Z.''

NHTSA has modified drawing number 175–0000, sheet 2 by changing the label for the head CG from ''Y'' to ''Z.''

Drawing 175–0000, Sheet 2, EuroSID 2 With Rib Extensions

Issue: DATD stated that for the Assembly Weights table, the sum of the individual segments does not equal the total weight shown in the table.

Analysis and Response: There is an error in the table. The correct total dummy weight should be 72.4 kg. This error was also present in the PADI and has been corrected in that document also.

NHTSA has modified drawing 175–0000, sheet 2, and Table 9.1 of the PADI to reflect the correct total mass of 72.4 kg.

Drawing 175–0000, Sheet 4, EuroSID 2 With Rib Extensions

Issue: DATD stated that in views A–A and D–D, there is no call-out provided for the fasteners to be used.

Analysis and Response: Denton's comments are accurate. Adding identification to the accelerometer screws would improve the quality of the drawing.

NHTSA has modified drawing 175–0000, sheet 4. In views A–A and D–D, add balloon callouts (Item 16) for the accelerometer mounting screws. We have modified the parts list to reflect a quantity of 30 for item 16. In addition, it is noted that the part number for item 18 is missing. We have modified the parts list to indicate a part number of 500025 for item 18.

Drawing 175–1000, Head Assembly

Issue: DATD stated that the reference line for the z-position of the center of gravity (CG) should be in line with the aluminum skull instead of the skin.

Analysis and Recommendation: Denton's comments are correct. The reference line should be even with the aluminum skull casting.

NHTSA has modified drawing 175–1000 by moving the reference line for the z-position of the CG from the surface of the skin to the surface of the skull casting.

Drawing 175–1010, Upper Neck Load Cell Structural Replacement

Issue: FTSS claims that the 2.53 dimension for the dowel pin installation height results in an unnecessarily tight tolerance. FTSS recommends using a one-decimal dimension of 2.5.

Analysis and Response: As shown on drawing 175–1010, a two-decimal dimension carries a tolerance of +/−0.05 mm, whereas a one-decimal dimension has a tolerance of +/−0.1 mm. The dowel pins are used to locate the head accelerometer mount and the slight increase in tolerance for their installation height will not result in any detrimental effects.

NHTSA has modified drawing number 175–1010 by changing the 2.53 dimension to 2.5.

Drawing 175–1010, Upper Neck Load Cell Replacement

Issue: As presently specified, the upper neck load cell replacement consists of three primary components: the upper, middle, and lower blanks. Denton ATD has requested an optional construction method whereby the part could be made as a one-piece unit.

Analysis and Response: Technically, there is no reason why the part could not be constructed as a one-piece unit as long as the dimensional, mass, and inertial properties are maintained equivalent to those of the originally specified three-piece unit. Denton ATD did not provide any data to substantiate that the mass and inertial properties are indeed equivalent to the three-piece unit. In the absence of such data, and considering the late date of the comment submission, it is not possible for NHTSA to determine if a one-piece construction would provide equivalent performance.

NHTSA has denied this request to allow an optional construction method for a one-piece unit of part number 175–1010.

Drawing 175–1011, Top Plate Upper Neck Load Cell Blank

Issue: FTSS claims that the 88.90 dimension is unnecessarily tight. FTSS recommends using a one-decimal dimension of 88.9.

Analysis and Response: The dimension in question defines the outer diameter of the upper neck load cell structural replacement. The slight increase in tolerance proposed by FTSS will not result in any detrimental effects. Furthermore, this part is assembled to part number 175–1012, Middle Plate UNLC Blank, to form the upper neck load cell structural replacement. The outer diameter of the middle plate (−1012) is specified at 88.9. Thus, it is consistent to specify the mating component, the top plate (−1011), similarly.

NHTSA has modified drawing number 175–1011 by changing the 88.90 dimension to 88.9.

Drawing 175–1012, Middle Plate UNLC Blank

Issue: FTSS claims the 6.97 and 17.24 dimensions are unnecessarily tight. FTSS recommends using one-decimal dimensions for each of these items: 7.0 and 17.2.

Analysis and Response: As shown on drawing 175–1012, a two-decimal dimension carries a tolerance of +/−0.05 mm, whereas a one-decimal dimension has a tolerance of +/−0.1 mm. The dimensions in questions specify the height, or thickness, of the plate. The minor changes suggested to the nominal thickness dimensions will have virtually no effect on the fit or external dummy dimensions. Additionally, the thickness of the Top Plate UNLC Blank (175–1011) is dimensioned using one-decimal dimensions, thus modifying 175–1012 will maintain consistency with the other components in the UNLC Blank Assembly.

NHTSA has modified drawing 175–1012 by changing the 6.97 and 17.24 dimensions to 7.0 and 17.2, respectively.

Drawing 175–1013, Bottom Plate UNLC Blank

Issue: FTSS claims that the 3.50, 0.50, and 6.40 dimensions are unnecessarily tight. FTSS recommends using one-decimal dimensions for each of these items.

Analysis and Response: As shown on drawing 175–1013, a two-decimal dimension carries a tolerance of +/−0.05 mm, whereas a one-decimal dimension has a tolerance of +/−0.1 mm. The dimensions in question define a clearance hole and countersink feature and thus do not require high-precision tolerances.

NHTSA has modified drawing number 175–1013 by changing the 3.50, 0.50, and 6.40 dimensions to 3.5, 0.5, and 6.4.

Drawing 175–2002, Neck Intermediate Plate

Issue: FTSS claims that the 6 dimension should be 6.0 and contends that note 2 is unnecessary and should be removed.

Analysis and Response: The dimension in question is a feature in the neck assembly into which one end of the neck buffer is inserted. A zero-decimal dimension carries with it a tolerance of +/−0.5 mm. This tolerance is too large to ensure proper retention of the neck buffer. Additionally, the other end of the neck buffer is inserted into the Neck Head and Torso Interface Plate (175–2003), which specifies the corresponding feature at 6.0. Thus, to maintain consistency with drawing 175–2003, the dimension should be changed to 6.0 on drawing 175–2002. Note 2 states ''Thread to conform to BS3643 & must be clear & free running.'' The only feature of the part which contains screw threads is the M12 Helicoil which is inserted into the center of the plate. Since a Helicoil is a purchased part which already contains threads, note 2 is essentially redundant.

NHTSA has modified drawing 175–2002 by changing the 6 dimension to 6.0 and by removing note 2.

Drawing 175–2003, Plate, Neck Head and Torso Interface

Issue: FTSS claims that the 84.00 dimension is unnecessarily tight and should be changed to 84.0.

Analysis and Response: The dimension in question defines the outer diameter of the component. The slight increase in the tolerance will not result in any detrimental effects.

NHTSA has modified drawing number 175–2003 by changing the 84.00 dimension to 84.0

Drawings 175–2010–1, –2015–1, and –2020–1, Neck Buffer Molded Shore 60/70/80 A

Issue: Each of the three prints specifies a durometer tolerance of +/−2. Denton ATD claims that such a tolerance is impractically tight and does not follow industry standard practice. DATD recommends a tolerance of +/−5.

Analysis and Response: A durometer tolerance of +/−2 is not practical given the expected variation typically associated with durometer measurement. The complicated shape of the buffer exacerbates this situation. A tolerance of +/−5 is more practicable.

NHTSA has modified drawings 175–2010–1, –2015–1, and –2020–1 to reflect a durometer tolerance of +/−5.

Drawing 175–3000, Shoulder Assembly

Issue: FTSS claimed that Item 17, Part Number 5000008 is incorrect and should be replaced with Part Number 5000014, Screw, SHCS M6 x 1 x 35.

Analysis and Response: Drawing 175–3000, as issued with the NPRM, specifies Item 17, Screw, SHCS M6 x 1 x 30. FTSS contends that the longer 35 mm screw will provide proper thread engagement. NHTSA agrees that the longer screw will improve thread engagement and does not foresee any interference problem that would result from using a longer, 35 mm screw.

NHTSA has modified drawing number 175–3000, replacing Part Number 5000008 with Part Number 5000014, Screw, SHCS M6 x 1 x 35.

Drawing 175–3003, Shoulder U Spring

Issue: FTSS recommends adding a note stating: ''Heat Treat: Harden and Temper to HRC 47 +/−2.''

Analysis and Response: As issued with the NPRM, drawing 175–3003 does not contain any notes regarding heat treat requirements. Inclusion of the proposed note would help to provide guidance, ensuring proper function of the unit.

NHTSA has modified drawing 175–3003 by adding the note ''Heat Treat: Harden and Temper to HRC 47 +/−2.''

Drawing 175–3011, Cam Buffer Pad

Issue: FTSS claims that the 5.0 hole requires a dimension to define its distance from the vertical edge of the part and recommends a requirement of 4.1.

Analysis and Response: As currently shown in drawing 175–3011, the distance between the two 5.0 holes is defined, however, their distance from the edge is not adequately specified. FTSS is correct in pointing out the need for a dimension to specify the location of the holes with respect to the edge of the unit.

NHTSA has modified drawing 175–3011 by adding a 4.1 dimension to specify the location of the hole relative to the vertical edge of the unit.

Drawing 175–3016, Shoulder Cam Clavicle Assembly

Issue: FTSS proposes that the note should be corrected as follows: ''Scratch clavicle before bonding and rough underside of buffer (item #2) 175–3011 with P60 grade paper.''

Analysis and Response: As issued in the NPRM, the note on drawing 175–3016 states: ''Scratch clavicle as shown before bonding rough underside of buffer (item #2) 175–3011 with P60 grade paper.'' The FTSS proposal intends to clarify the note since the drawing does not actually ''show'' where the clavicle is to be scratched. The intention of the note is to prepare the mating surfaces of the clavicle and the buffer to be bonded together, thus ensuring a durable bond. However, the proposed language of the note could be improved.

NHTSA has modified drawing 175–3016 by adding the following note: ''Prepare the mating surfaces of the clavicle (item #1) and buffer pad (item #2) by lightly abrading them with P60 grit sandpaper.''

Drawing 175–3017, Shoulder Cam Clavicle

Issue: FTSS proposes the following changes: dimension 25.00 +0/−.25 should be 24.7 +/−0.3; dimension 6.0 should be 5.8 +/−0.3; dimension 13.0 should be 13.0 +/−0.2; and dimension 4.6 is unclear and unnecessary.

Analysis and Response: The shoulder cam clavicle is a plastic molded part and therefore tight tolerances are harder to maintain. The changes proposed by FTSS will relax the tolerances but will not affect the functional performance of the parts. Also, the 4.6 dimension has no landmark or reference point and therefore it should be eliminated, as suggested by FTSS.

NHTSA has modified drawing 175–3017 as follows: changed dimension 25.00 +0/−0.25 to 24.7 +/−0.3; changed dimension 13.0 to 13.0 +/−0.2; changed dimension 6.0 to 5.8 +/−0.3; and deleted the 4.6 dimension.

Drawings 175–4011, –4012, –4013, and –4014, Linear Rib Guide Assembly

Issue: As currently specified, all of the dimensions on these parts are reference dimensions. Denton ATD suggests removing the parentheses around the dimensions, making them required dimensions.

Analysis and Response: DATD is correct in noting that the dimensions should be required dimensions.

NHTSA has modified drawings 175–4011, –4012, –4013, and –4014 by removing the parentheses, thereby making all of the dimensions required dimensions.

Drawings 175–4040, –4041, and –4042, Springs

Issue: As currently specified, the drawings specify a spring rate for each item, but do not provide any allowable tolerance for the spring rate. DATD suggests that a tolerance of +/−3% be applied to the spring rates. Additionally, DATD suggests a tolerance of +/−1 mm on all dimensions.

Analysis and Response: DATD is correct in noting that a spring rate tolerance is necessary. However, review of other spring drawings and research of typical spring rate tolerances used in other industries suggests that a tolerance of +/−3% is too restrictive. A more realistic tolerance would be +/−10%. Additionally, the spring rate tolerance does not supersede the certification requirements in the rib drop test and therefore adding such a tolerance to the print will have no effect on the functionality of the rib modules. With regard to the dimensional tolerance, NHTSA agrees that +/−1 mm on all dimensions is reasonable and practicable.

NHTSA has modified drawing 175–4040 by adding the following note: ''Spring rate tolerance: +/−1.6 N/mm.'' We have modified drawing 175–4041 by adding the following note: ''Spring rate tolerance: +/−1.4 N/mm.'' We have modified drawing 175–4042 by adding the following note: ''Spring rate tolerance: +/−1.9 N/mm.'' Also, we have modified all three drawings to reflect a tolerance of +/−1 mm for all dimensions.

Drawings 175–4040, 175–4041, and 175–4042, Damper Springs

Issue: FTSS proposes the inclusion of three additional springs with different stiffness for rib module tuning. To simplify the drawings, FTSS proposes the elimination of drawings 175–4041 and 175–4042 and the modification of drawing 175–4040 to add three additional damper return springs of varying stiffness (17.7, 20.3, and 21.6 N/mm) to offer additional tuning flexibility.

Analysis and Response: The ES–2re dummy's thorax response is primarily controlled by its three rib modules. Each rib module contains three components that influence their response: The damper, the stiff damper spring, and the damper return spring. The rib modules' performances are individually verified by conducting the rib module certification test. The current drawing package specifies three damper return springs of varying stiffness: 13.8, 16.4, and 19.0 N/mm. Dummy users are given the option of using any of the three springs as long as the rib modules meet the certification requirements specified in the rib module drop test. The various springs provide users with the ability to change springs as necessary to meet the certification response parameters.

Each of the primary components of a rib module (the damper, the stiff damper spring, and the damper return spring) contributes significantly to the overall system performance. NHTSA has tested extensively with the three springs that are presently specified in the

drawing package. However, NHTSA has no test experience with the three new springs proposed by FTSS. In order to determine the effect on the rib response of the three different springs proposed by FTSS, NHTSA would need to undertake an extensive study involving the three primary components. For example, it is entirely possible that a stiffer spring, suggested by FTSS, could mask other deficiencies such as unacceptable damper performance.

Given that FTSS's comments were received by the agency well after the published deadline for comments (FTSS's memo is dated Aug. 4, 2005) and considering the extensive research needed to qualify the performance of the proposed springs, the agency is unable to concur with the suggested change. Furthermore, FTSS did not provide any supporting data to substantiate the use of the newly proposed springs. We do not acknowledge a need for additional optional rib module springs since the three springs presently specified appear to provide sufficient flexibility. FTSS failed to demonstrate that the proposed springs are necessary or that they would offer any additional benefits such as improved durability, repeatability, or biofidelity. Accordingly, NHTSA is denying the request to incorporate three additional damping springs.

Drawing 175–4051, Damper Assembly

Issue: The drawing presently specifies that the damper body shall be welded to the damper bracket. DATD expressed concern that the heat required to weld the two units together could lead to damage of the damper and adversely affect its performance.

Analysis and Response: It is not in NHTSA's best interest to specify a process that could potentially adversely affect the performance of the unit. On the other hand, there is no indication that the process has affected damper performance in the past and thus it would not be proper to disallow the use of a welding process to join the two units. Accordingly, it would be practical to allow manufacturers to decide for themselves what process provides the best performance.

NHTSA has modified drawing 175–4051 by replacing the weld note with the following text: ''Attach item 1 and 2 securely to attain structural integrity of a monolithic body using appropriate mechanical method.'' In addition, we modified drawing 175–4053 by adding the following note: ''External body of the damper may be threaded to achieve mechanical attachment with the damping bracket as specified in 175–4051.''

Drawing 175–4052, Damper Bracket

Issue: FTSS proposes removing the note ''Masking Before Painting.''

Analysis and Response: The note is not critical to the fit or function of the part and removing it from the drawing will not compromise the performance of the dummy.

NHTSA has modified drawing 175–4052 to remove the note ''Mask Before Painting.''

Drawing 175–4053, Damper

Issue: FTSS contends that the overall length dimension of 193 +/−3 is inaccurate and should be 195.7 +/−3

Analysis and Response: NHTSA/VRTC inspected the several typical dampers and determined that the proposed dimension of 195.7 +/−3 is acceptable. However, it is noted that the tolerance proposed should maintain consistency with the nominal dimension in terms of the one-decimal place call-out.

NHTSA has modified drawing 175–4053 by changing the 193 +/−3 dimension to 195.7 +/−3.0,

Drawing 175–4057, Damper Bracket Clamp

Issue: FTSS proposes that the 16 and 8 dimensions should be 16.0 and 8.0.

Analysis and Response: The dimensions in question specify the clamp width and the location of a pair of through holes with respect to the edge of the clamp. Changing the dimensions to one-decimal place dimensions will reduce the allowable tolerance and ensure better reproducibility and fit.

NHTSA has modified drawing 175–4057 by changing the 16 and 8 dimensions to 16.0 and 8.0, respectively.

Drawing 175–4058, Damper Return Spring

Issue: DATD notes that the current drawing does not contain a tolerance for the spring rate listed in note 2. DATD suggests a value of +/−20%.

Analysis and Response: DATD is correct in noting that a tolerance on the spring rate is needed. The recommendation of +/−20% is reasonable and practicable.

NHTSA has modified note 2 of drawing 175–4058 by adding the tolerance ''+/−0.25 kN/m.''

Drawing 175–4060, Rib, Rear Bracket, Rib Extension

Issue: FTSS stated ''the tolerance and the bend angle are over-specified such hat the part could not be made.'' FTSS provided a drawing in their submission which describes the recommended corrections.

Analysis and Response: The drawing submitted by FTSS provides additional detail for fabricating the rib and therefore NHTSA must assume that FTSS intended to state that the tolerance and bend angle are ''under-specified'' as opposed to ''over-specified.'' In the proposed drawing, FTSS includes a dimension on the bend angle (89.0 +1.5/−1.0 degrees) and x- and y-dimensions for mounting hole locations. The additional detail provided will help to assure that the rib can be reproduced by multiple manufacturers.

NHTSA has modified drawing number 175–4060 to incorporate the additional dimensions and tolerances submitted by FTSS.

Drawing 175–5501, Lumbar Spine, Molded

Issue: FTSS claims to have studied ''a large sample of lumbar spines.'' According to the claim, FTSS states that the statistical analysis suggests the lumbar length should be 135 +/−2 mm instead of 136 +0/−3 mm.

Analysis and Response: The proposed change would effectively change the allowable lumbar length from 133–136 mm to 133–137 mm, thus allowing lumbar spines to be 1 mm longer. Review of the complete dummy's external dimensions (175–0000, sheet 3) indicates that only two dimensions could potentially be affected by the proposed change: the sitting height and the seat to lower face of thoracic spine box. However, it is noted that these external dimensions have tolerances of +/−9 mm and +/−5 mm, respectively, and therefore the proposed change would have little or no effect on the ability of manufacturers to meet those requirements.

NHTSA has modified drawing 175–5501 by changing the 136 +0/−3 dimension to 135 +/−2.

Drawings 175–6010 and –6002, Iliac Wing Assembly, Left and Right

Issue: FTSS proposes changing the 99.9 and 11.0 dimensions to 100 and 11, respectively. FTSS also proposes that note 3 should be modified to read: ''All Tolerance Other Than Mounting Hole Centers +/−1.''

Analysis and Response: The iliac wing assembly is a plastic molded part and as such tolerances of +/−0.1 are difficult to maintain. Therefore it is agreed that the 99.9 and 11.0 dimensions can be changed to 100 and 11, thus allowing the tolerances on those dimensions to be +/−0.5. With regard to the note 3, it is not clear that

note 3 is needed. There is only one dimension on the print, the 20.03 diameter, that is neither a reference dimension nor the location of a hole center. Therefore, it appears 3 can be removed.

NHTSA has modified drawings 175–6010 and –6002 to change the 99.9 and 11.0 dimensions to 100 and 11, and has deleted note 3.

Drawing 175–6012, Hip Pivot Pin

Issue: FTSS proposes the elimination of the 14.5 dimension and changing the 58 (reference) dimension to 58.0 +/−0.2.

Analysis and Response: Changing the overall length dimension of 58 from a reference dimension to an inspection dimension of 58.0 +/−0.2 eliminates the need for the 14.5 dimension.

NHTSA has modified drawing 175–6012 by removing the 14.5 dimension and changing the 58 dimension to 58.0 +/−0.2.

Drawings 175–6015 and –6020, Femur Buffer Assembly, Left and Right

Issue: The current print specifies that items 1 and 3 are attached using ''Tape, Acrylic, Double Sided.'' DATD suggests that ''equivalent'' materials be allowed for the bonding process.

Analysis and Response: As previously stated, the phrase ''equivalent'' is open to interpretation. However, it is not in NHTSA's best interest to maintain unnecessary material specifications. In this instance, the double sided tape listed in item 2 of the part list could be identified as ''reference'' and a note could be added stating ''Attach items 1 and 3 securely using appropriate bonding method.''

NHTSA has modified drawings 175–6015 and –6020 by adding the statement ''(reference)'' to item 2 in the parts list. We have also added the following note: ''Attach items 1 and 3 securely using appropriate bonding method.''

Drawing 175–6018, Plate, Femur Buffer

Issue: FTSS proposes that the 8 and 3 dimensions should be 8.0 and 3.0, respectively.

Analysis and Response: The subject item is part of an assembly used in the upper femur. Tightening the tolerances as FTSS proposes will help to ensure a good match between mating parts in the assembly.

NHTSA has modified drawing 175–6018 by changing dimension 8 to 8.0 and dimension 3 to 3.0.

Drawing 175–6041, Sacrum Cover Plate

Issue: The sacrum cover plate is used to mount and protect the pelvis accelerometers. DATD suggests modifying the drawing to allow a small cut-out that would be used for accelerometer cable routing, reducing the likelihood for pinching wires.

Analysis and Response: DATD did not show that the current design leads to damaged accelerometer wires, therefore it does not seem necessary to require a cut-out in the plate. However, the DATD suggestion is not unreasonable or impractical and thus it could be shown as an optional configuration.

We have modified drawing 175–6041 to show an optional cut-out for accelerometer cable routing.

Drawings 175–7000–1 and –2, Leg Assembly Left and Right

Issue: FTSS recommended that Item 23, Part Number 9000296, Washer, should be deleted.

Analysis and Response: FTSS has correctly pointed out an error in the NHTSA drawing package.

We have deleted part number 9000296, Washer from drawings 175–7000–1 and –2.

Drawings 175–7001–1 and –2 Lower Leg Assembly Left and Right

Issue: FTSS stated that the flesh component of the assembly should be specified as a separate item in the parts list and identified as part numbers 175–7003–1 and –2, Lower Leg Flesh, Left and Right, respectively.

Analysis and Response: NHTSA was unaware that the leg flesh was available as a separate part. Specifying the leg flesh as a separate part allows consumers to purchase the lower leg flesh separately, which is less expensive than purchasing the entire lower leg assembly.

NHTSA has incorporated drawings 175–7003–1 and –2, Lower Leg Flesh, Left and Right, into the drawing package. We have modified drawing 175–7001–1 and –2 to identify the 175–7003–1 and –2 as separate parts.

Drawing 175–7034, Foot Rib

Issue: FTSS stated that the 5/16″ cutout feature has been eliminated from the design and should be removed from the drawing.

Analysis and Response: The 5/16″ cutout feature is not critical to the design's performance and can be eliminated. Additionally, the cutout feature is shown in the foot weldment assembly drawing (175–3031) and should be deleted from that drawing, as well.

We have modified drawings 175–7034 and 175–7031 by removing the 5/16″ cutout feature in each drawing.

Drawings 175–7090–1 and –2, Thigh Molded, Left and Right

Issue: FTSS suggests adding a reference dimension of 174 for the width of the thigh flesh. FTSS also suggests changing Note 2 on drawing 175–7090–1 from ''+/−2 mm'' to ''+/−3 mm'' to be consistent with drawing number 175–7090–2.

Analysis and Response: As released with the NPRM, there is no dimension on the width of the thigh flesh. Because the proposed dimension would only be a reference value, the parts are not strictly required to meet the dimension and therefore the proposed change would not necessarily affect existing or future parts. The dimension could be useful to manufacturers as a reference check. With regard to Note 2, all of the dimensions on both 175–7090–1 and –2 are reference dimensions. As such, the parts are not strictly required to conform to the dimensional tolerances and therefore changing the tolerance to +/−3 mm will have no effect. Furthermore, it is desirable to maintain consistency with 175–7090–2.

NHTSA has modified drawings 175–7090–1 and –2 to add a reference dimension of 174 for the width of the thigh flesh, and has modified Note 2 of drawing 175–7090–1 to reflect a tolerance of +/−3 mm.

Drawing SA572–S29, Six Channel Femur Load Cell

Issue: The drawing specified by NHTSA in the NPRM is the same as that used for the femur load cell in the Hybrid III 5th female dummy. While the ES–2re femur load cell is dimensionally the same as that used in the 5th female, the weight of the load cell used in the ES–2re is less. FTSS recommends creating a new part number for the ES–2re Six Channel Load Cell using the same dimensional and functional specifications, except changing the weight specification to 1.87 lb (0.85 kg) max. In its comments, Denton ATD also submitted that the load cell should have a weight of 1.87 lb (0.85 kg) max.

Analysis and Response: NHTSA inspected the load cells used in their evaluations of the ES–2re dummy. It was determined that the load cells were, indeed, lighter than those specified for use in the Hybrid III 5th female.

We have generated a new femur load cell drawing to reflect the ES–2re femur load cell as recommended.

Drawing SA572–S70, Six Axis Upper Neck Load Cell

Issue: FTSS claimed that the three dimensional coordinate axis system is incorrect as the Y-axis should be

pointing in the opposite direction. Additionally, FTSS requested that the drawing should include the formulae to calculate the moments about the occipital condyle. FTSS recommended adding:

$M_{x,oc} = M_{x\ measured} + (0.02 \times F_{y\ measured})$
$M_{y,oc} = M_{y\ measured} + (0.02 \times F_{x\ measured})$

Analysis and Response: FTSS is correct in pointing out the error in the three-dimensional coordinate axis system. With regard to adding the formulae, there exists no current requirement for making the computations of neck moments about the occipital condyle. However, it is noted that the addition of the formulae does not impose any further requirements and thus can be added for reference purposes.

NHTSA has modified drawing SA572–S70 to show the correct orientation of the Y-axis in the coordinate system. We added the formulae under the title: ''Reference for Computing Moments about the Occipital Condyle. Units are Newtons for forces and Newton-meters for moments.''

EuroSID2 in Title Block

Issue: FTSS noted multiple drawings that contained the word ''EuroSID2'' in the title block. FTSS claims the official name is ''ES–2.'' The affected drawings are SA572–S70, SA572–S71–1, SA572–S71–2, SA572–S71–3, SA572–S72, SA572–S73, SA572–S74, SA572–S75, SA572–S76, and SA572–S77.

Analysis and Response: FTSS is correct in identifying the potential for confusion with the use of multiple references such as 'EuroSID2' and 'ES–2.' However, NHTSA has adopted the name 'ES–2re' to identify the dummy as the ES–2 with rib extension.

We have removed all references to ''EuroSID2'' from the drawing package and replaced them with 'ES–2re.'

Drawing SA572–S72, 3 Axis Shoulder Load Cell

Issue: FTSS claims that the weight specification is incorrect and should be 0.53 lbs (0.24 kg) max. DATD also suggested this specification in its comments.

Analysis and Response: As issued in the NPRM, drawing SA572–S72 specifies 0.47 lbs max. The FTSS proposal would increase the max weight by 0.06 lbs. NHTSA considers the proposed increase in maximum weight to be inconsequential to the overall assembled weight of the dummy.

We have modified drawing SA572–S72 to indicate ''Weight: 0.53 lbs/0.24 kg max.''

Drawing SA572–S73, 4 Axis Backplate Load Cell

Issue: FTSS states that the weight specification is incorrect and should be 2.80 lbs (1.27 kg) max. DATD also suggested this specification in its comments.

Analysis and Response: As issued in the NPRM, drawing SA572-–S73 specifies 6.83 lbs max. Upon further analysis, NHTSA determined that the 6.83 pound specification was established, incorrectly, by measuring the weight of the load cell and additional hardware. Upon learning of this mistake, NHTSA verified that the FTSS recommendation of 2.80 lbs maximum was appropriate.

We have modified drawing SA572–S73 to indicate ''Weight 2.80 lbs/1.27 kg max.''

Drawing SA572–S76, Lumbar Load Cell

Issue: FTSS states that the axes referenced in the load capacity specification are incorrectly labeled. FTSS recommends replacing ''F_x'' with 'F_y' and 'F_y' with 'F_z.' Also, FTSS states that the weight specification is incorrect and should be 0.57 lbs (0.26 kg). DATD suggests a weight specification of 0.59 lbs (0.27 kg).

Analysis and Response: FTSS is correct in pointing out the error with regard to the F_y and F_z axes. As issued in the NPRM, the drawing contains a weight specification of 0.55 lbs (0.25 kg). The FTSS suggestion would increase the weight specification by 0.02 lbs, while the DATD request would only increase the weight by 0.04 lbs. NHTSA considers the proposed increase in maximum weight to be inconsequential to the overall assembled weight of the dummy.

We have modified the drawing by correctly identifying the F_y and F_z axes and by changing the weight specification to indicate: ''Weight: 0.59 lbs/0.27 kg.''

Drawing SA572–S77, Pubic Load Cell

Issue: FTSS claims that the specification for crosstalk is inadequate. In their comments, FTSS is concerned with bending loads applied to the load cell being reported as compressive loads. FTSS recommends an additional requirement be added to the drawing indicating ''Moment Crosstalk Error < 5% Full Scale at Applied M_x/M_y Moments of 4000 in-lbs./452 Nm.'' DATD, which also manufactures the load cells, independently provided the same comment, requesting that a moment crosstalk error of less than 5% be placed on the drawing.

Analysis and Response: Crosstalk is measured during the load cell calibration process. When a load is applied exclusively to one channel, the other channels of the load cell are monitored to determine if they are (incorrectly) measuring a response. The pubic load cell is a single-axis load cell and therefore is calibrated only by applying a load along its single sensitive axis. In a strict interpretation, it is not possible to measure crosstalk on a single axis load cell because there are no other channels to monitor when the load is applied along the single sensitive axis. FTSS is proposing that a moment load (of 4,000 in-lbs) be placed on the load cell while monitoring the compressive load channel. There exists a precedent for this type of requirement. The uniaxial femur load cell, model number 2121, manufactured by Robert A. Denton, Inc. contains a similar note: ''Moment error 6% maximum with a 5,000 in-lb moment.''

NHTSA tested one ES–2re pubic load cell to determine its sensitivity to applied bending loads. However, since it was unknown whether the pubic load cell could survive a large bending moment, only loads of 3,000 in-lbs were applied. To achieve the 3,000 in-lbs moment, an axial load of 3,000 pounds was applied at a distance of one inch from the longitudinal centerline of the load cell. The bending moments were applied at 4 equally-spaced locations around the perimeter of the load cell to assess the load cell's sensitivity in multiple orientations. NHTSA's testing at 3,000 in-lbs of bending moment resulted in errors of 4.6, 6.2, 1.2, and 5.9% at the four locations. NHTSA notes that only one load cell was tested in this analysis, therefore any requirement should consider the greater possible variation that would be observed if additional load cells had been tested.

It should also be noted that NHTSA believes the correct bending loads should be applied about the x- and z-axes (M_x and M_z), not about the x- and y-axes as proposed by FTSS and DATD.

Additionally, upon review of the drawing, NHTSA observed one minor error. The capacity of the load cell is presently specified to be 2,000 N (450 lbf). The correct specification should be 20,000 N (4,500 lbf).

We have modified drawing SA572–S77 by adding the following note: ''Axial load error shall be less than 7% for a 3,000 pound axial load applied at any location along a one inch radius from the longitudinal centerline of the load cell.'' We have also modified the print to reflect the correct load cell capacity of 20,000 N (4,500 lbf).

List of Subjects in 49 CFR Part 572

Incorporation by reference, Motor vehicle safety.

■ In consideration of the foregoing, NHTSA amends 49 CFR Part 572 as follows:

Part 572—Anthropomorphic Test Dummies

■ 1. The authority citation for Part 572 continues to read as follows:

Authority: 49 U.S.C. 322, 30111, 30115, 30117 and 30166; delegation of authority at 49 CFR 1.50.

Subpart T—[Reserved]

■ 2. 49 CFR part 572 is amended by reserving subpart T.

■ 3. 49 CFR part 572 is amended by adding a new subpart U, consisting of §§ 572.180 through 572.189 to read as follows:

Subpart T—[Reserved]

Subpart U— ES–2re Side Impact Crash Test Dummy, 50th Percentile Adult Male

Sec.
572.180 Incorporated materials.
572.181 General description.
572.182 Head assembly.
572.183 Neck assembly.
572.184 Shoulder assembly.
572.185 Thorax (upper torso) assembly.
572.186 Abdomen assembly.
572.187 Lumbar spine.
572.188 Pelvis.
572.189 Instrumentation and test conditions.
Appendix A to Subpart U of Part 572—Figures

Subpart U, ES–2re Side Impact Crash Test Dummy, 50th Percentile Adult Male

§ 572.180 Incorporated materials.

(a) The following materials are hereby incorporated into this Subpart by reference:

(1) A parts/drawing list entitled, ''Parts/Drawings List, Part 572 Subpart U, Eurosid 2 with Rib Extensions (ES2re), Sept. 2006,''

(2) A drawings and inspection package entitled ''Parts List and Drawings, Part 572 Subpart U, Eurosid 2 with Rib Extensions (ES–2re, Alpha Version), September 2006,'' consisting of:

(i) Drawing No. 175–0000 ES–2re Dummy Assembly;

(ii) Drawing No. 175–1000 Head Assembly;

(iii) Drawing No. 175–2000, Neck Assembly Test/Cert;

(iv) Drawing No. 175–3000, Shoulder Assembly;

(v) Drawing No. 175–3500, Arm Assembly, Left;

(vi) Drawing No. 175–3800, Arm Assembly, Right;

(vii) Drawing No. 175–4000, Thorax Assembly with Rib Extensions;

(viii) Drawing No. 175–5000, Abdominal Assembly;

(ix) Drawing No. 175–5500 Lumbar Spine Assembly;

(x) Drawing No. 175–6000 Pelvis Assembly;

(xi) Drawing No. 175–7000–1, Leg Assembly—left;

(xii) Drawing No. 175–7000–2, Leg Assembly—right;

(xiii) Drawing No. 175–8000, Neoprene Body Suit; and,

(xiv) Drawing No. 175–9000, Headform Assembly;

(3) A procedures manual entitled ''Procedures for Assembly, Disassembly and Inspection (PADI) of the EuroSID–2re 50th Percentile Adult Male Side Impact Crash Test Dummy, September 2006,'' incorporated by reference in §§ 572.180(a)(2), and 572.181(a);

(4) Society of Automotive Engineers (SAE) Recommended Practice J211, Rev. Mar 95 ''Instrumentation for Impact Tests—Part 1—Electronic Instrumentation''; and,

(5) SAE J1733 of 1994–12 ''Sign Convention for Vehicle Crash Testing.''

(b) The Director of the Federal Register approved the materials incorporated by reference in accordance with 5 U.S.C. 552(a) and 1 CFR part 51. Copies of the materials may be inspected at the National Archives and Records Administration (NARA), and in electronic format through the DOT docket management system (DMS). For information on the availability and inspection of this material at NARA, call 202–741–6030, or go to: *http://www.archives.gov/federal_register/code_of_federal_regulations/ibr_locations.html.* For information on the availability and inspection of this material at the DOT DMS, call 1–800–647–5527, or go to: *http://dms.dot.gov.*

(c) The incorporated materials are available as follows:

(1) The Parts/Drawings List, Part 572 Subpart U, Eurosid 2 with Rib Extensions (ES2re), Sept. 2006, referred to in paragraph (a)(1) of this section, the Parts List and Drawings, Part 572 Subpart U, Eurosid 2 with Rib Extensions (ES–2re, Alpha Version), September 2006, referred to in paragraph (a)(2) of this section, and the PADI document referred to in paragraph (a)(3) of this section, are available in electronic format through the DOT docket management system and in paper format from Leet-Melbrook, Division of New RT, 18810 Woodfield Road, Gaithersburg, MD 20879, telephone (301) 670–0090.

(2) The SAE materials referred to in paragraphs (a)(4) and (a)(5) of this section are available from the Society of Automotive Engineers, Inc., 400 Commonwealth Drive, Warrendale, PA 15096, telephone 1–877–606–7323.

§ 572.181 General description.

(a) The ES–2re Side Impact Crash Test Dummy, 50th Percentile Adult Male, is defined by:

(1) The drawings and specifications contained in the ''Parts List and Drawings, Part 572 Subpart U, Eurosid 2 with Rib Extensions (ES–2re, Alpha Version), September 2006,'' which includes the technical drawings and specifications described in Drawing 175–0000, the titles of which are listed in Table A;

TABLE A

Component assembly	Drawing No.
Head Assembly	175–1000
Neck Assembly Test/Cert	175–2000
Neck Bracket Including Lifting Eyebolt	175–2500
Shoulder Assembly	175–3000
Arm Assembly-Left	175–3500
Arm Assembly-Right	175–3800
Thorax Assembly with Rib Extensions	175–4000
Abdominal Assembly	175–5000
Lumbar Spine Assembly	175–5500
Pelvis Assembly	175–6000
Leg Assembly, Left	175–7000–1

TABLE A—Continued

Component assembly	Drawing No.
Leg Assembly, Right	175–7000–2
Neoprene Body Suit	175–8000

(2) ''Parts/Drawings List, Part 572 Subpart U, Eurosid 2 with Rib Extensions (ES2re), Sept. 2006,'' containing 8 pages, incorporated by reference in § 572.180,

(3) A listing of available transducers-crash test sensors for the ES–2re Crash Test Dummy is shown in drawing 175–0000 sheet 4 of 6, dated September 2006, incorporated by reference in § 572.180,

(4) Procedures for Assembly, Disassembly and Inspection (PADI) of the ES–2re Side Impact Crash Test Dummy, September 2006, incorporated by reference in § 572.180,

(5) Sign convention for signal outputs reference document SAE 1733 Information Report, titled ''Sign Convention for Vehicle Crash Testing'' dated July 15, 1986.

(b) Exterior dimensions of ES–2re test dummy are shown in drawing 175–0000 sheet 3 of 6, dated September 2006.

(c) Weights of body segments (head, neck, upper and lower torso, arms and upper and lower segments) and the center of gravity location of the head are shown in drawing 175–0000 sheet 2 of 6, dated September 2006.

(d) Adjacent segments are joined in a manner such that, except for contacts existing under static conditions, there is no additional contact between metallic elements of adjacent body segments throughout the range of motion.

(e) The structural properties of the dummy are such that the dummy conforms to this Subpart in every respect before use in any test similar to those in Standard No. 214, Side Impact Protection and Standard No. 201, Occupant Protection in Interior Impact.

§ 572.182 Head assembly.

(a) The head assembly consists of the head (drawing 175–1000), including the neck upper transducer structural replacement, and a set of three (3) accelerometers in conformance with specifications in § 572.189(b) and mounted as shown in drawing (175–0000 sheet 1 of 6). When tested to the test procedure specified in paragraph (b) of this section, the head assembly shall meet performance requirements specified in paragraph (c) of this section.

(b) *Test procedure.* The head shall be tested per procedure specified in 49 CFR § 572.112(a).

(c) *Performance criteria.*

(1) When the head assembly is dropped in accordance with § 572.112 (a), the measured peak resultant acceleration shall be between 125 g's and 155 g's;

(2) The resultant acceleration-time curve shall be unimodal to the extent that oscillations occurring after the main acceleration pulse shall not exceed 15% (zero to peak) of the main pulse;

(3) The fore-and-aft component of the head acceleration shall not exceed 15 g's.

§ 572.183 Neck assembly.

(a) The neck assembly consists of parts shown in drawing 175–2000. For purposes of this test, the neck is mounted within the headform assembly 175–9000 as shown in Figure U1 in Appendix A to this subpart. When subjected to tests procedures specified in paragraph (b) of this section, the neck-headform assembly shall meet performance requirements specified in paragraph (c) of this section.

(b) *Test procedure.*

(1) Soak the neck-headform assembly in a test environment as specified in § 572.189(o);

(2) Attach the neck-headform assembly to the Part 572 subpart E pendulum test fixture as shown in Figure U2–A in Appendix A to this subpart, so that the midsagittal plane of the neck-headform assembly is vertical and perpendicular to the plane of motion of the pendulum longitudinal centerline shown in Figure U2–A. Torque the half-spherical screws (175–2004) located at either end of the neck assembly to 88 +/ − 5 in-lbs using the neck compression tool (175–9500) or equivalent;

(3) Release the pendulum from a height sufficient to allow it to fall freely to achieve an impact velocity of 3.4+/ − 0.1 m/s measured at the center of the pendulum accelerometer (Figure 22 as set forth in 49 CFR 572.33) at the time the pendulum makes contact with the decelerating mechanism. The velocity-time history of the pendulum falls inside the corridor determined by the upper and lower boundaries specified in Table 1 to paragraph (a) of this section.

(4) Allow the neck to flex without the neck-headform assembly making contact with any object;

(5) Time zero is defined in § 572.189(k).

TABLE TO 1 TO PARAGRAPH (A)—ES–2RE NECK CERTIFICATION PENDULUM VELOCITY CORRIDOR

Upper boundary		Lower boundary	
Time (ms)	Velocity (m/s)	Time (ms)	Velocity (m/s)
1.0	0.00	0.0	− 0.05
3.0	− 0.25	2.5	− 0.375
14.0	− 3.20	13.5	− 3.7
		17.0	− 3.7

(c) *Performance criteria.* (1) The pendulum deceleration pulse is to be characterized in terms of decrease in velocity as determined by integrating the filtered pendulum acceleration response from time-zero. The pendulum shall be vertical within +/ − 1° when its speed is reduced to 0 m/s.

(2) The maximum rotation in the lateral direction of the reference plane of the headform (175–9000) as shown in Figure U2–B in Appendix A to this subpart, shall be 49 to 59 degrees with respect to the longitudinal axis of the pendulum occurring between 54 and 66 ms from time zero. Rotation of the headform-neck assembly and the neck angle with respect to the pendulum shall be measured with potentiometers specified in § 572.189(c), installed as shown in drawing 175–9000, and calculated per procedure specified in Figure U2–B in Appendix A to this subpart;

(3) The decaying headform rotation vs. time curve shall cross the zero angle with respect to its initial position at time of impact relative to the pendulum centerline between 53 ms to 88 ms after the time the peak translation-rotation value is reached.

§ 572.184 Shoulder assembly.

(a) The shoulder (175–3000) is part of the body assembly shown in drawing 175–0000. When subjected to impact tests specified in paragraph (b) of this section, the shoulder assembly shall meet performance requirements of paragraph (c) of this section.

(b) *Test procedure.*

(1) Soak the dummy assembly, without suit and shoulder foam pad (175–3010), in a test environment as specified in § 572.189(n);

(2) The dummy is seated, as shown in Figure U3 in Appendix A to this subpart, on a flat, horizontal, rigid surface covered by two overlaid 2 mm thick Teflon sheets and with no back support of the dummy's torso. The dummy's torso spine backplate is vertical within ±2 degrees and the midsagittal plane of the thorax is positioned perpendicular to the direction of the plane of motion of the impactor at contact with the shoulder. The arms are oriented forward at 50±2 degrees from the horizontal, pointing downward. The dummy's legs are horizontal and symmetrical about the midsaggital plane with the distance between the innermost point on the opposite ankle at 100 ±5 mm. The length of the elastic shoulder cord (175–3015) shall be adjusted so that a force between and including 27.5 and 32.5 N applied in a forward direction at 4 ±1 mm from the outer edge of the clavicle in the same plane as the clavicle movement, is required to initiate a forward motion of 1 to 5 mm;

(3) The impactor is the same as defined in § 572.189(a);

(4) The impactor is guided, if needed, so that at contact with the shoulder, its longitudinal axis is within ±0.5 degrees of a horizontal plane and perpendicular (±0.5 degrees) to the midsagittal plane of the dummy and the centerpoint on the impactor's face is within 5 mm of the center of the upper arm pivot bolt (5000040) at contact with the test dummy, as shown in Figure U3 in Appendix A to this subpart;

(5) The impactor impacts the dummy's shoulder at 4.3±0.1 m/s.

(c) *Performance criteria.* The peak acceleration of the impactor is between 7.5 g's and 10.5 g's during the pendulum's contact with the dummy.

§ 572.185 Thorax (upper torso) assembly.

(a) The thorax assembly of the dummy must meet the requirements of both (b) and (c) of this section. Section 572.185(b) specifies requirements for an individual rib drop test, and § 572.185(c) specifies requirements for a full-body thorax impact test.

(b) *Individual rib drop test.* For purposes of this test, the rib modules (175–4002), which are part of the thorax assembly (175–4000), are tested as individual units. When subjected to test procedures specified in paragraph (b)(1) of this section, the rib modules shall meet performance requirements specified in paragraph (b)(2) of this section. Each rib is tested at both the 459 mm and 815 mm drop height tests described in paragraphs (b)(1)(v)(A) and (B) of this section.

(1) *Test procedure.*

(i) Soak the rib modules (175–4002) in a test environment as specified in § 572.189(o);

(ii) Mount the rib module rigidly in a drop test fixture as shown in Figure U7 in Appendix A to this subpart with the impacted side of the rib facing up;

(iii) The drop test fixture contains a free fall guided mass of 7.78±0.01 kg that is of rigid construction and with a flat impact face 150±1.0 mm in diameter and an edge radius of ±0.25 mm;

(iv) Align the vertical longitudinal centerline of the drop mass so that the centerpoint of the downward-facing flat surface is aligned to impact the centerline of the rib rail guide system within ± 2.5 mm.

(v) The impacting mass is dropped from the following heights:

(A) 459 ±5 mm

(B) 815 ±8 mm

(vi) A test cycle consists of one drop from each drop height specified in paragraph (b)(1)(v) of this section. Allow a period of not less than five (5) minutes between impacts in a single test cycle. Allow a period of not less than thirty (30) minutes between two separate cycles of the same rib module.

(2) *Performance criteria.*

(i) Each of the rib modules shall deflect as specified in paragraphs (b)(2)(i)(A) and (B) of this section, with the deflection measurements made with the internal rib module position transducer specified in § 572.189(d):

(A) Not less than 36 mm and not more than 40 mm when impacted by the mass dropped from 459 mm; and,

(B) Not less than 46 mm and not more than 51mm when impacted by the mass dropped from 815 mm.

(c) *Full-body thorax impact test.* The thorax is part of the upper torso assembly shown in drawing 175–4000. For this full-body thorax impact test, the dummy is tested as a complete assembly (drawing 175–0000) with the struck-side arm (175–3500, left arm; 175–3800, right arm) removed. The dummy's thorax is equipped with deflection potentiometers as specified in drawing SA572–S69. When subjected to the test procedures specified in paragraph (c)(1) of this section, the thorax shall meet the performance requirements set forth in paragraph (c)(2).

(1) *Test Procedure.*

(i) Soak the dummy assembly (175–0000), with struck-side arm (175–3500, left arm; 175–3800, right arm), shoulder foam pad (175–3010), and neoprene body suit (175–8000) removed, in a test environment as specified in § 572.189(n);

(ii) The dummy is seated, as shown in Figure U4 in Appendix A to this subpart, on a flat, horizontal, rigid surface covered by two overlaid 2 mm thick Teflon sheets and with no back support of the dummy's torso. The dummy's torso spine backplate is vertical within ±2 degrees and the midsagittal plane of thorax is positioned perpendicular to the direction of the plane of motion of the impactor at contact with the thorax. The non-struck side arm is oriented vertically, pointing downward. The dummy's legs are horizontal and symmetrical about the midsagittal plane with the distance between the innermost point on the opposite ankle at 100 ±5 mm;

(iii) The impactor is the same as defined in § 572.189(a);

(iv) The impactor is guided, if needed, so that at contact with the thorax its longitudinal axis is within ±0.5 degrees of horizontal and perpendicular ±0.5 degrees to the midsagittal plane of the dummy and the centerpoint of the impactor's face is within 5 mm of the impact point on the dummy's middle rib shown in Figure U4 in Appendix A to this subpart;

(v) The impactor impacts the dummy's thorax at 5.5 m/s ±0.1 m/s.

(vi) Time zero is defined in § 572.189(k).

(2) *Performance Criteria.*

(i) The individual rib modules shall conform to the following range of deflections:

(A) Upper rib not less than 33.2 mm and not greater than 41.3 mm;

(B) Middle rib not less than 37.1 mm and not greater than 45.4 mm;

(C) Lower rib not less than 35.6 mm and not greater than 43.0 mm.

(ii) The impactor force shall be computed as the product of the impact probe acceleration and its mass. The peak impactor force at any time after 6 ms from time zero shall be not less than 5,173 N and not greater than 6,118 N.

§ 572.186 Abdomen assembly.

(a) The abdomen assembly (175–5000) is part of the dummy assembly shown in drawing 175–0000 including load sensors specified in § 572.189(e). When subjected to tests procedures specified in paragraph (b) of this section, the abdomen assembly shall meet performance requirements specified in paragraph (c) of this section.

(b) *Test procedure.*

(1) Soak the dummy assembly (175–0000), without suit (175–8000) and shoulder foam pad (175–3010), as specified in § 572.189(n);

(2) The dummy is seated as shown in Figure U5 in Appendix A to this subpart;

(3) The abdomen impactor is the same as specified in § 572.189(a) except that on its rectangular impact surface is

affixed a special purpose block whose weight is 1.0 ± 0.01 kg. The block is 70 mm high, 150 mm wide and 60 to 80 mm deep. The impact surface is flat, has a minimum Rockwell hardness of M85, and an edge radius of 4 to 5 mm. The block's wide surface is horizontally oriented and centered on the longitudinal axis of the probe's impact face as shown in Figure U5–A in Appendix A to this subpart;

(4) The impactor is guided, if needed, so that at contact with the abdomen its longitudinal axis is within ± 0.5 degrees of a horizontal plane and perpendicular ± 0.5 degrees to the midsagittal plane of the dummy and the centerpoint on the impactor's face is aligned within 5 mm of the center point of the middle load measuring sensor in the abdomen as shown in Figure U5;

(5) The impactor impacts the dummy's abdomen at 4.0 m/s ± 0.1 m/s;

(6) Time zero is defined in § 572.189(k).

(c) Performance criteria.

(1) The maximum sum of the forces of the three abdominal load sensors, specified in 572.189(e), shall be not less than 2200 N and not more than 2700 N and shall occur between 10 ms and 12.3 ms from time zero. The calculated sum of the three load cell forces must be concurrent in time.

(2) Maximum impactor force (impact probe acceleration multiplied by its mass) is not less than 4000 N and not more than 4800 N occurring between 10.6 ms and 13.0 ms from time zero.

§ 572.187 Lumbar spine.

(a) The lumbar spine assembly consists of parts shown in drawing 175–5500. For purposes of this test, the lumbar spine is mounted within the headform assembly 175–9000 as shown in Figure U1 in Appendix A to this subpart. When subjected to tests procedures specified in paragraph (b) of this section, the lumbar spine-headform assembly shall meet performance requirements specified in paragraph (c) of this section.

(b) *Test procedure.*

(1) Soak the lumbar spine-headform assembly in a test environment as specified in § 572.189(o);

(2) Attach the lumbar spine-headform assembly to the Part 572 pendulum test fixture per procedure in § 572.183(b)(2) and as shown in Figure U2–A in Appendix A to this subpart. Torque the lumbar hex nut (p/n 9000057) on to the lumbar cable assembly (175–5506) to 50 ± 5 in-lb;

(3) Release the pendulum from a height sufficient to allow it to fall freely to achieve an impact velocity of 6.05 ±0.1 m/s measured at the center of the pendulum accelerometer (Figure 22) at the time the pendulum makes contact with its decelerating mechanism. The velocity-time history of the pendulum falls inside the corridor determined by the upper and lower boundaries specified in Table 1 to paragraph (b) of this section;

(4) Allow the lumbar spine to flex without the lumbar spine or the headform making contact with any object;

(5) Time zero is defined in § 572.189(k).

TABLE 1 TO PARAGRAPH (b).—ES–2RE LUMBAR SPINE CERTIFICATION PENDULUM VELOCITY CORRIDOR

Upper boundary		Lower boundary	
Time (ms)	Velocity (m/s)	Time (ms)	Velocity (m/s)
1.0	0.00	0.0	−0.05
3.7	−0.24	2.7	−0.425
27.0	−5.80	24.5	−6.50
		30.0	−6.50

(c) *Performance criteria.* (1) The pendulum deceleration pulse is to be characterized in terms of decrease in velocity as determined by integrating the filtered pendulum acceleration response from time-zero.

(2) The maximum rotation in the lateral direction of the reference plane of the headform (175–9000) as shown in Figure U2–B in Appendix A to this subpart, shall be 45 to 55 degrees with respect to the longitudinal axis of the pendulum occurring between 39 and 53 ms from time zero. Rotation of the headform-neck assembly shall be measured with potentiometers specified in § 572.189(c), installed as shown in drawing 175–9000, and calculated per procedure specified in Figure U2–B in Appendix A to this subpart.

(3) The decaying headform rotation vs. time curve shall cross the zero angle with respect to its initial position at impact relative to the pendulum centerline between 37 ms to 57 ms after the time the peak translation-rotation value is reached.

§ 572.188 Pelvis.

(a) The pelvis (175–6000) is part of the torso assembly shown in drawing 175–0000. The pelvis is equipped with a pubic symphysis load sensor in conformance with § 572.189(f) and mounted as shown in drawing (175–0000 sheet 4). When subjected to tests procedures specified in paragraph (b) of this section, the pelvis assembly shall meet performance requirements specified in paragraph (c) of this section.

(b) *Test procedure.*

(1) Soak the dummy assembly (175–0000) without suit (175–8000) and shoulder foam pad (175–3010) as specified in § 572.189(n);

(2) The dummy is seated as specified in Figure U6 in Appendix A to this subpart;

(3) The pelvis impactor is the same as specified in § 572.189(a);

(4) The impactor is guided, if needed, so that at contact with the pelvis its longitudinal axis is within ± 0.5 degrees of a horizontal plane and perpendicular to the midsagittal plane of the dummy and the centerpoint on the impactor's face is within 5 mm of the center of the H-point in the pelvis, as shown in Figure U5 in Appendix A to this subpart;

(5) The impactor impacts the dummy's pelvis at 4.3 +/− 0.1 m/s.

(c) *Performance criteria.*

(1) The impactor force (probe acceleration multiplied by its mass) shall be not less than 4,700 N, and not more than 5,400 N, occurring between 11.8 ms and 16.1 ms from time zero as defined in § 572.189(k);

(2) The pubic symphysis load, measured with load cell specified in § 572.189(f) shall be not less than 1,230 N and not more than 1,590 N occurring between 12.2 ms and 17.0 ms from time zero as defined in § 572.189(k).

§ 572.189 Instrumentation and test conditions.

(a) The test probe for lateral shoulder, thorax without arm, abdomen, and pelvis impact tests is the same as that

specified in § 572.36(a) and the impact probe has a minimum mass moment of inertia in yaw of 9,000 kg-cm^2, a free air resonant frequency not less than 1,000 Hz and the probe's end opposite to the impact face has provisions to mount an accelerometer with its sensitive axis collinear with the longitudinal axis of the probe. All hardware attached directly to the impactor and one-third (⅓) of the mass of the suspension cables must be included in the calculations of the total impactor mass. The sum mass of the attachments and ⅓ cable mass must not exceed 5 percent of the total pendulum mass. No suspension hardware, suspension cables, or any other attachments to the test probe, including velocity vane, shall make contact with the dummy during the test.

(b) Accelerometers for the head, the thoracic spine, and the pelvis conform to specifications of SA572–S4.

(c) Rotary potentiometer for the neck and lumbar spine certification tests conforms to SA572–53.

(d) Linear position transducer for the thoracic rib conforms to SA572–S69.

(e) Load sensors for the abdomen conform to specifications of SA572–S75.

(f) Load sensor for the pubic symphysis conforms to specifications of SA572–77.

(g) Load sensor for the lumbar spine conforms to specifications of SA572–76.

(h) Instrumentation and sensors conform to the Recommended Practice SAE J–211 (Mar. 1995)—Instrumentation for Impact Test unless noted otherwise.

(i) All instrumented response signal measurements shall be treated to the following specifications:

(1) Head acceleration—Digitally filtered CFC 1000;

(2) Neck and lumbar spine rotations—Digitally filtered CFC 180;

(3)Neck and lumbar spine pendulum accelerations—Digitally filtered CFC 60;

(4) Pelvis, shoulder, thorax without arm, and abdomen impactor accelerations—Digitally filtered CFC 180;

(5) Abdominal and pubic symphysis force—Digitally filtered at CFC 600;

(6) Thorax deflection—Digitally filtered CFC 180.

(j)(1) Filter the pendulum acceleration data using a SAE J211 CFC 60 filter.

(2) Determine the time when the filtered pendulum accelerometer data first crosses the -10 g level (T_{10}).

(3) Calculate time-zero: $T0 = T_{10} - T_m$.,

Where:

T_m = 1.417 ms for the Neck Test
= 1.588 ms for the Lumbar Spine Test

(4) Set the data time-zero to the sample number nearest to the calculated T0.

(k)(1) Filter the pendulum acceleration data using a SAE J211 CFC 180 filter.

(2) Determine the time when the filtered pendulum accelerometer data first crosses the -1.0 m/s^2 ($-.102$ g) acceleration level (T0).

(3) Set the data time-zero to the sample number of the new T0.

(l) Mountings for the head, spine and pelvis accelerometers shall have no resonance frequency within a range of 3 times the frequency range of the applicable channel class.

(m) Limb joints of the test dummy are set at the force between 1 to 2 G's, which just supports the limb's weight when the limbs are extended horizontally forward. The force required to move a limb segment does not exceed 2 G's throughout the range of the limb motion.

(n) Performance tests are conducted, unless specified otherwise, at any temperature from 20.6 to 22.2 degrees C. (69 to 72 degrees F.) and at any relative humidity from 10 percent to 70 percent after exposure of the dummy to those conditions for a period of not less than 4 hours.

(o) Certification tests of the same component, segment, assembly, or fully stassembled dummy shall be separated in time by a period of not less than thirty (30) minutes unless otherwise specified.

Appendix A to Subpart U of Part 572—Figures

BILLING CODE 4910–59–P

Figure U1

NECK/LUMBAR SPINE ATTACHED TO HEADFORM

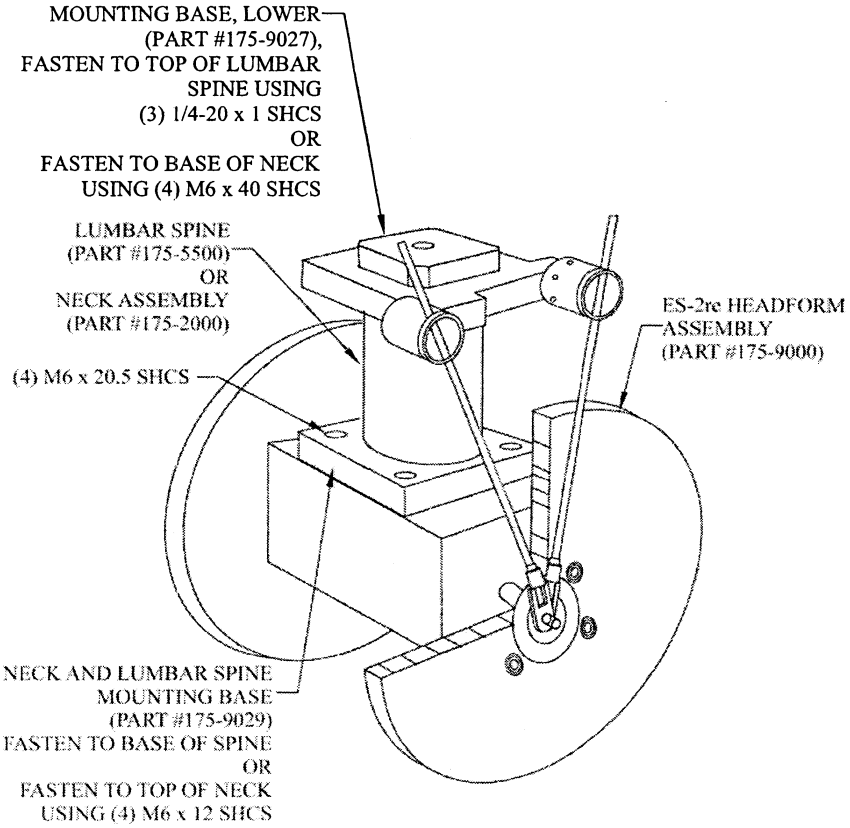

Figure U2-A

NECK/LUMBAR SPINE/HEADFORM ATTACHED TO PENDULUM

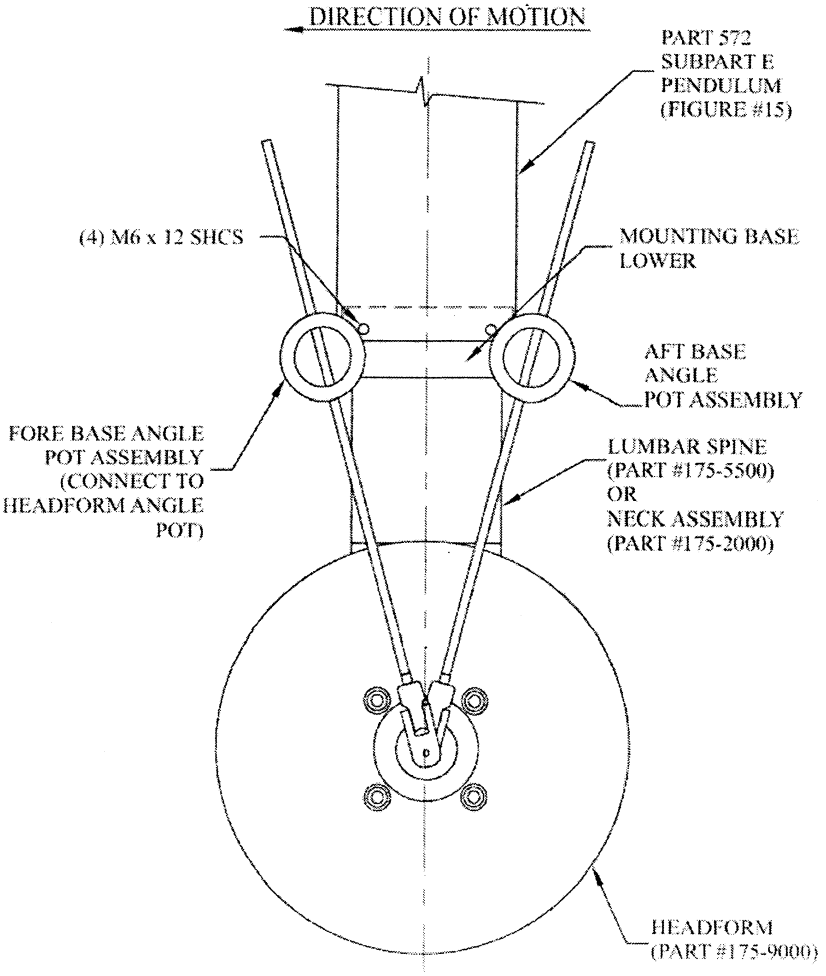

Figure U2-B

ANGLE MEASUREMENTS WITH HEADFORM SET-UP

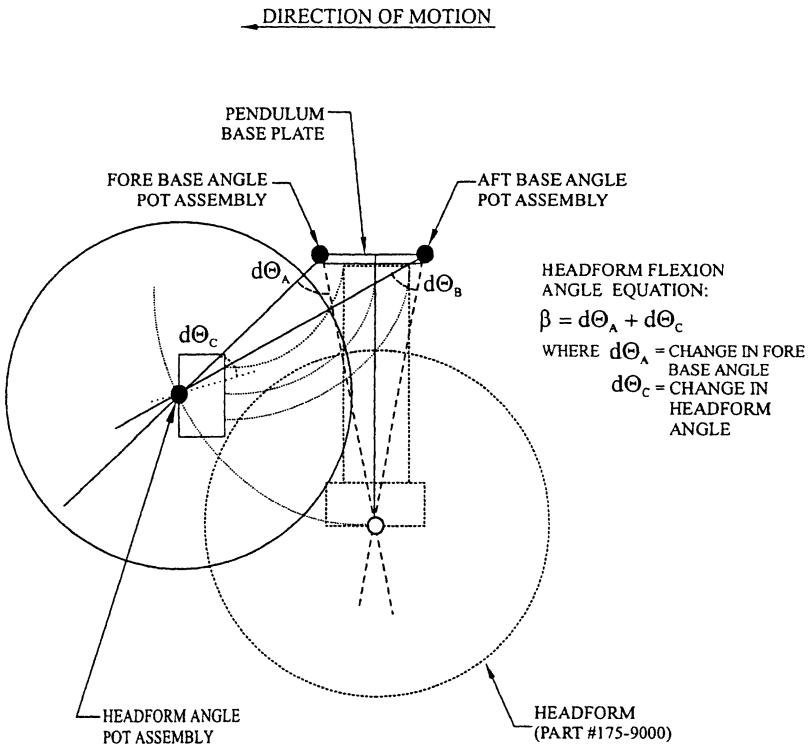

Figure U3

SHOULDER IMPACT

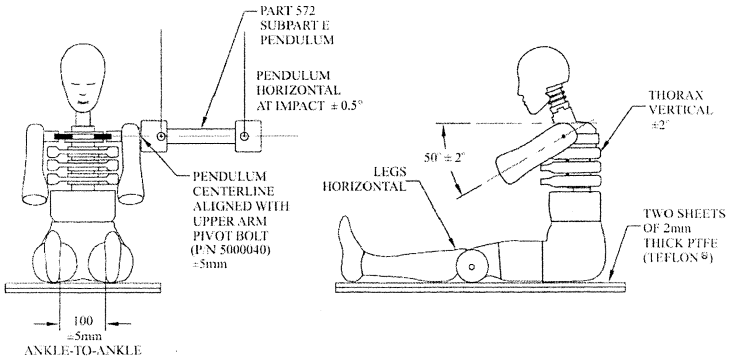

Figure U4
THORAX IMPACT

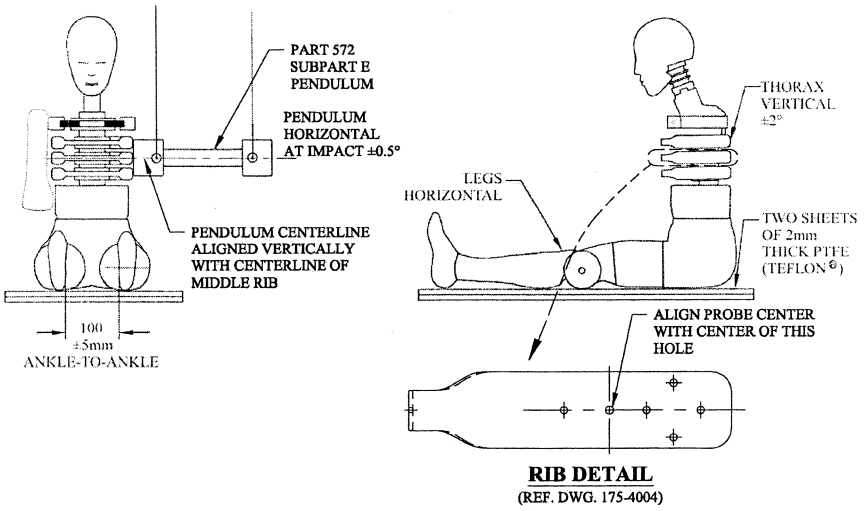

Figure U5
ABDOMEN IMPACT

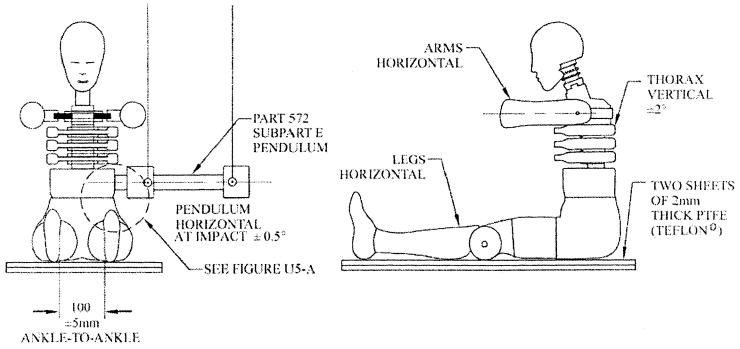

Figure U5-A

ABDOMEN IMPACT - VIEW A

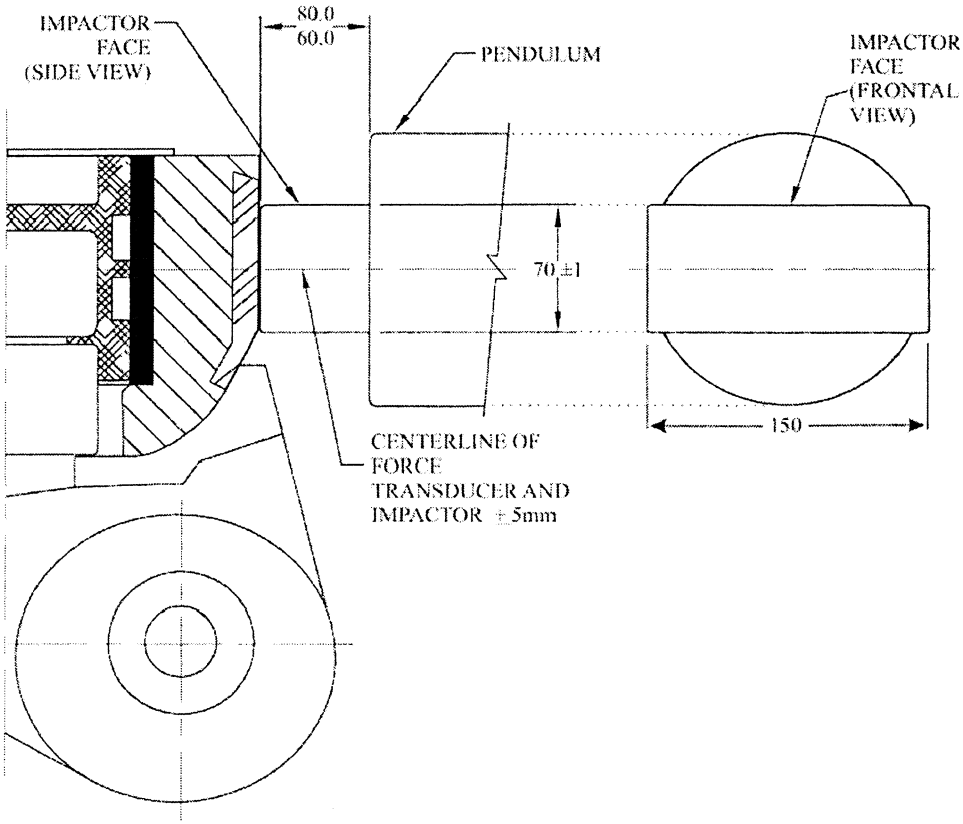

ABDOMEN TEST SET-UP

Figure U6

PELVIS IMPACT

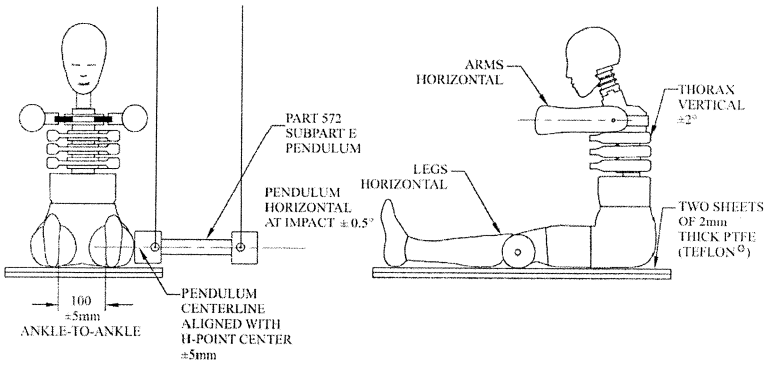

Figure U7
RIB DROP TEST

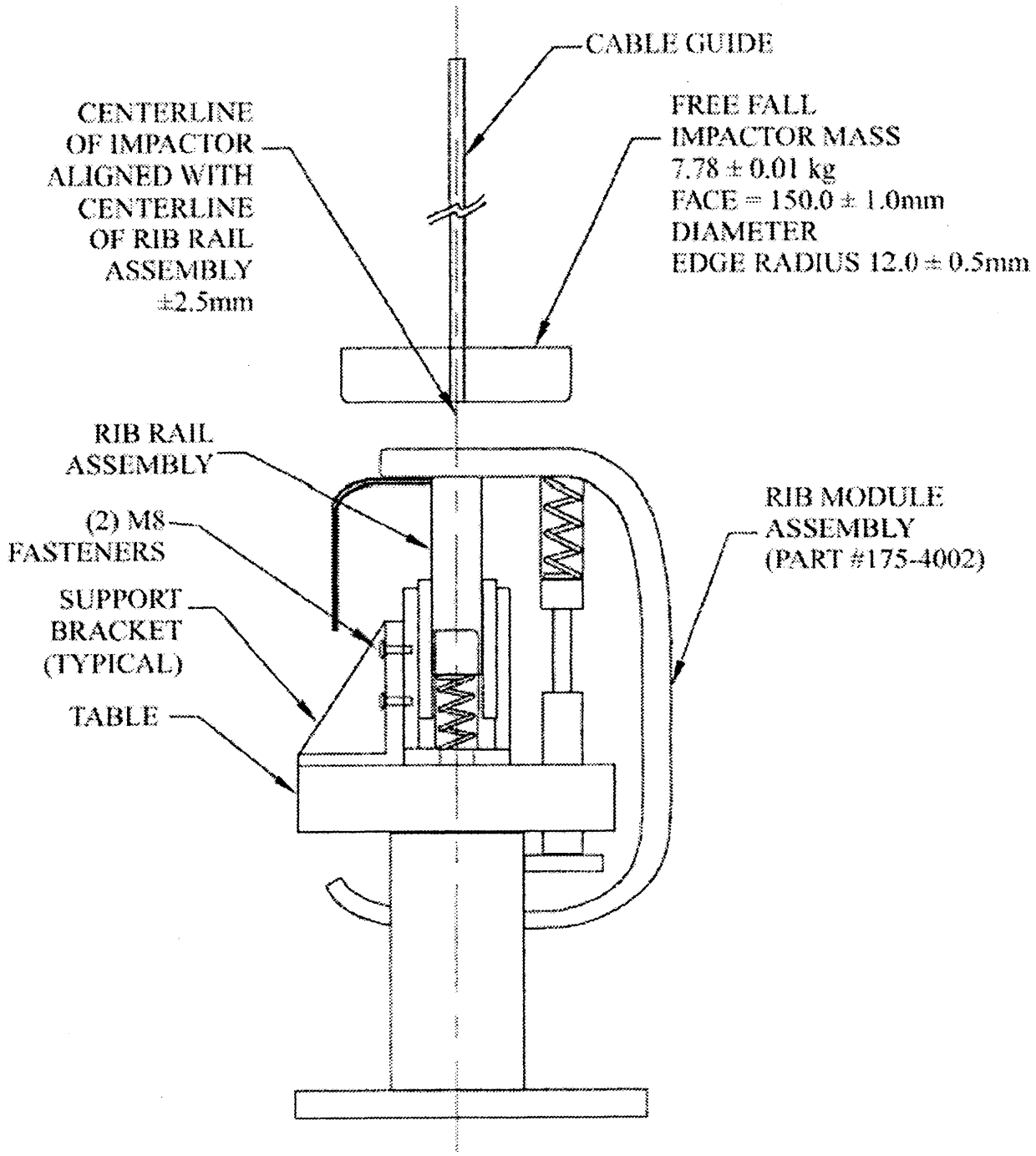

Issued: November 24, 2006.

Nicole R. Nason,

Administrator.

[FR Doc. 06–9554 Filed 12–13–06; 8:45 am]

BILLING CODE 4910–59–C

DEPARTMENT OF TRANSPORTATION

National Highway Traffic Safety Administration

49 CFR Part 572

Docket No. NHTSA 25442

RIN 2127–AJ16

Anthropomorphic Test Devices; SID–IIs Side Impact Crash Test Dummy 5th Percentile Adult Female

AGENCY: National Highway Traffic Safety Administration (NHTSA), Department of Transportation (DOT).

ACTION: Final rule.

SUMMARY: This final rule amends the agency's regulation on anthropomorphic test devices to add specifications and qualification requirements for the 5th percentile adult female crash test dummy, called the SID–IIs Build Level D (''SID–IIs'') test dummy. The SID–IIs dummy is instrumented in the head, thorax, abdomen and pelvis, which enables it to assess in a comprehensive manner the performance of vehicles in protecting small-stature occupants in side impacts. NHTSA plans to use the SID–IIs dummy in an upgraded Federal motor vehicle safety standard on side impact protection.

DATES: This final rule is effective June 12, 2007. The incorporation by reference of certain publications listed in the regulations is approved by the Director of the Federal Register as of June 12, 2007. If you wish to petition for reconsideration of this rule, your petition must be received by January 29 2007.

ADDRESSES: If you wish to petition for reconsideration of this rule, you should refer in your petition to the docket number of this document and submit your petition to: Administrator, Room 5220, National Highway Traffic Safety Administration, 400 Seventh Street SW., Washington, DC 20590.

The petition will be placed in the docket. Anyone is able to search the electronic form of all documents received into any of our dockets by the name of the individual submitting the comment (or signing the comment, if submitted on behalf of an association, business, labor union, etc.). You may review DOT's complete Privacy Act Statement in the **Federal Register** published on April 11, 2000 (Volume 65, Number 70; Pages 19477–78) or you may visit *http://dms.dot.gov.*

FOR FURTHER INFORMATION CONTACT: For non-legal issues, you may call Stanley Backaitis, NHTSA Office of Crashworthiness Standards (telephone 202–366–4912). For legal issues, you may call Deirdre Fujita, NHTSA Office of Chief Counsel (telephone 202–366–2992) (fax 202–366–3820). You may send mail to these officials at the National Highway Traffic Safety Administration, 400 Seventh St., SW., Washington, DC 20590.

SUPPLEMENTARY INFORMATION:

Table of Contents

I. Background
a. Need for the Dummy
b. Development of the SID–IIs
c. Development of the FRG and Build Level D Dummies
II. Response to the Comments on the FRG
III. Other Issues
a. Overview
b. How this Final Rule Differs from the NPRM
c. Description and Reference Materials
d. Biofidelity
e. Repeatability and Reproducibility (R&R)
1. Component and Sled Tests Generally
2. Repeatability and Reproducibility Assessments
3. NPRM
4. Comments on the NPRM
5. Agency Response
i. Component Qualification Tests
A. Repeatability in Component Tests
B. Reproducibility in Component Tests
ii. Sled Tests
A. Flat Wall Sled Tests at 6.0 m/s
1. Repeatability in Flat Wall Sled Tests at 6.0 m/s
2. Reproducibility in Flat Wall Sled Tests at 6.0 m/s
B. Abdominal Offset Sled Tests at MCW
C. Abdominal Offset Sled Tests at TRC
1. Repeatability in Abdominal Offset Sled Tests at TRC
2. Reproducibility in Abdominal Offset Sled Tests at TRC
iii. Conclusion
f. Pelvis of the Dummy
1. Pelvis Plug
2. Iliac Load Cell
3. Iliac Wing
g. The Shoulder with Arm Test
h. Other
1. Directional Impact Sensitivity
2. Toyota Suggests an Improved Upper Arm
3. Injury Assessment Reference Values
4. Reversibility
i. Test Dummy Drawing Package
1. Three-Dimensional (3-D) Shape Definitions
2. Material Specifications
3. Dummy Drawing Changes
IV. Qualification Procedures and Response Corridors
a. Qualification Procedures
b. Response Corridors
V. Dummy Performance in Full-Scale Vehicle Crash Tests
a. Oblique Vehicle-to-Pole Crash Tests
b. MDB Tests
c. Summary
VI. Conclusions
Rulemaking Analyses and Notices
Appendix A: Durability and Overload Analysis of the SID–IIsD Test Dummy

NHTSA published a notice of proposed rulemaking (NPRM) that proposed to upgrade Federal Motor Vehicle Safety Standard (FMVSS) No. 214, ''Side Impact Protection'' (49 CFR 571.214) by, among other things, adopting a dynamic pole test into the standard (May 17, 2004; 69 FR 27990; Docket 17694; reopening of comment period, January 12, 2005, 70 FR 2105). The proposed pole test is similar to, but more demanding than, that currently used optionally in FMVSS No. 201. In the proposed pole test, a vehicle is propelled sideways into a rigid pole at an angle of 75 degrees, at any speed up to 32 km/h (20 mph). The NPRM proposed that compliance with the pole test would be determined in two test configurations, one using a ''SID–IIs'' test dummy representing 5th percentile adult females and the other using an ''ES–2re'' test dummy representing mid-size adult males. Vehicles tested with the SID–IIs would have to comply with a head injury criterion and with thoracic and pelvic injury criteria developed for the new dummy. The agency also proposed using the dummies in FMVSS No. 214's existing moving deformable barrier (MDB) test, which simulates a vehicle-to-vehicle ''T-bone'' type intersection crash.[1]

This document establishes the specifications and qualification requirements for the SID–IIs 5th percentile adult female crash test dummy which would be used in the upgraded FMVSS No. 214. The NPRM preceding this Part 572 final rule was published on December 8, 2004 (69 FR 70947; Docket 18865; extension of comment period, March 8, 2005; 70 FR

[1] On August 10, 2005, President Bush signed the ''Safe, Accountable, Flexible, Efficient Transportation Equity Act: A Legacy for Users,'' (SAFETEA–LU), P.L. 109–59 (Aug. 10, 2005; 119 Stat. 1144), to authorize funds for Federal-aid highways, highway safety programs, and transit programs, and for other purposes. Section 10302(a) of SAFETEA–LU provides:

Sec. 10302. Side-Impact Crash Protection Rulemaking.

(a) Rulemaking.—The Secretary shall complete a rulemaking proceeding under chapter 301 of title 49, United States Code, to establish a standard designed to enhance passenger motor vehicle occupant protection, in all seating positions, in side impact crashes. The Secretary shall issue a final rule by July 1, 2008.

At the time of the enactment of § 10302(a), the agency's notice of proposed rulemaking to upgrade FMVSS No. 214 was already pending. The final rule completing the rulemaking proceeding will be issued at a future date.