A preliminary ''Environmental Analysis Check List'' is available in the docket where indicated under **ADDRESSES**. Comments on this section will be considered before we make the final decision on whether the rule should be categorically excluded from further environmental review.

List of Subjects in 33 CFR Part 110

Anchorage grounds.

For the reasons discussed in the preamble, the Coast Guard proposes to amend 33 CFR part 110 as follows:

PART 110—ANCHORAGE REGULATIONS

1. The authority citation for part 110 continues to read as follows:

Authority: 33 U.S.C. 471, 1221 through 1236, 2030, 2035 and 2071; 33 CFR 1.05–1(g); and Department of Homeland Security Delegation No. 0170.1.

2. Amend § 110.60, by revising paragraph (o–2) to read as follows:

§ 110.60 Port of New York and vicinity.

* * * * *

(o) * * *

(o–2) Hudson River, at Nyack. That portion of the Hudson River bound by the following points: 41°06′06.8″ N, 073°54′55.5″ W; thence to 41°06′06.8″ N, 073°54′18.0″ W; thence to 41°05′00.0″ N, 073°54′18.0″ W; thence to 41°05′00.0″ N, 073°55′02.2″ W; thence along the shoreline to the point of origin (NAD 1983), excluding a fairway in the charted cable area that is marked with buoys.

Note: The area is principally for use by yachts and other recreational craft. A mooring buoy is permitted.

* * * * *

Dated: January 24, 2007.

Timothy S. Sullivan,

Rear Admiral, U.S. Coast Guard Commander, First Coast Guard District.

[FR Doc. E7–1882 Filed 2–5–07; 8:45 am]

BILLING CODE 4910–15–P

DEPARTMENT OF TRANSPORTATION

National Highway Traffic Safety Administration

49 CFR Part 571

[Docket No. NHTSA–2006–23882]

RIN 2127–AH34

Federal Motor Vehicle Safety Standards; Door Locks and Door Retention Components

AGENCY: National Highway Traffic Safety Administration, Department of Transportation (NHTSA).

ACTION: Final rule.

SUMMARY: We are amending our safety standard on door locks and door retention components in order to add and update requirements and test procedures and to harmonize with the world's first global technical regulation for motor vehicles. Today's final rule adds test requirements and test procedures for sliding doors, adds secondary latched position requirements for doors other than hinged side doors and back doors, provides a new optional test procedure for assessing inertial forces, and extends the application of the standard to buses with a gross vehicle weight rating (GVWR) of less than 10,000 pounds, including 12–15 passenger vans. Today's final rule also eliminates an exclusion from the requirements of the standard for doors equipped with wheelchair platform lifts.

DATES: Today's final rule is effective September 1, 2009. Optional early compliance is permitted on and after February 6, 2007. Petitions for reconsideration must be received by March 23, 2007.

ADDRESSES: Petitions for reconsideration must be submitted to: Administrator, National Highway Traffic Safety Administration, 400 Seventh Street, SW., Nassif Building, Washington, DC 20590–0001.

FOR FURTHER INFORMATION, CONTACT: *For technical issues:* Mr. Maurice Hicks, Structures and Special Systems Division, Office of Crashworthiness Standards, National Highway Traffic Safety Administration, 400 Seventh Street, SW., Washington, DC 20590; telephone (202) 366–6345; telefax (202) 493–2739; *Maurice.hicks@dot.gov.*

For legal issues: Ms. Rebecca Schade, Office of the Chief Counsel, National Highway Traffic Safety Administration, 400 Seventh Street, SW., Washington, DC 20590; telephone (202) 366–2992; telefax (202) 366–3820.

SUPPLEMENTARY INFORMATION:

Table of Contents

I. Executive Summary
II. Background
A. Safety Problem
B. Harmonization Efforts and the Proposed Upgrade
1. Global Technical Regulation (GTR)
2. Notice of Proposed Rulemaking
3. Public Comments
III. SAFETEA–LU
IV. Upgrade to FMVSS No. 206
A. The GTR Process
B. Definitions
C. Hinged Door Requirements
1. Load Tests
2. Inertial Test
3. Door Hinges
D. Side Sliding Door Requirements
1. Side Sliding Door Latch Requirements
2. Side Sliding Door Test Procedure
a. Compression Versus Tension
b. Test Device and Set-Up
c. Application of Force
d. Performance Requirement
A. Door Locks
B. Applicability
V. Certification Information
VI. Costs, Benefits, and the Effective Date
VII. Regulatory Analyses and Notices

I. Executive Summary

Between 1995 and 2003, over 54,000 motor vehicle occupants were ejected annually from their vehicles. Ejections through glazing (*i.e.*, ejections through a vehicle window) comprised 59 percent of all ejections. Twenty-six percent of all ejections occurred through openings other than side glazing and doors, such as windshields, open convertible tops, and open truck beds. The remaining 15 percent of ejections occurred through a vehicle door. Given the sources and magnitude of the overall safety problem posed by ejections from vehicles, the agency is addressing the problem comprehensively, focusing on ejections through glazing as well as ejections through doors.[1] This final rule focuses on those ejections that occur through a vehicle door.

Currently, passenger cars, trucks, and multipurpose passenger vehicles must comply with Federal Motor Vehicle Safety Standard (FMVSS) No. 206, *Door locks and door retention components.* Most of this standard's requirements were established in the early 1970s, in

[1] On September 15, 2004, the agency proposed revisions to FMVSS No. 214, *Side impact protection,* which would likely induce vehicle manufacturers to use side curtains as a countermeasure (69 FR 55550). The Safe, Accountable, Flexible, Efficient Transportation Equity Act: A Legacy for Users (SAFETEA–LU) added a provision to 49 U.S.C. Chapter 301 which requires the agency to conduct a rulemaking proceeding to establish performance standards to reduce complete and partial ejections of vehicle occupants. See 49 U.S.C. 30128(c)(1). Containment requirements for side curtains may be one of the countermeasures to prevent ejections through side glazing.

order to minimize the likelihood of occupant ejections through side door openings. In 1995, these requirements were expanded to address back doors. While these requirements have significantly improved door performance over the level of pre-standard doors, occupants continue to be ejected through doors.

Crashes such as offset frontals, near side impacts, and especially rollovers lead to complex loading conditions, which cause doors to open. Additionally, less complex load conditions may occur in many non-rollover conditions. While the agency is continuing to develop a repeatable and practicable test procedure that will address complex loading, today's final rule updates the existing requirements and test procedures to ensure the strength of individual latch components for load conditions that are less complex, such as those that occur in many non-rollover collisions.

The agency's efforts to improve the requirements and test procedures of FMVSS No. 206 to address door ejections in a more satisfactory way coincided with the adoption of the initial Program of Work under the 1998 Global Agreement.[2] The agency sought to work collaboratively on door ejections with other contracting parties to the 1998 Global Agreement, particularly Transport Canada, the European Union (EU), and Japan. Through the exchange of information on ongoing research and testing and through the leveraging of resources for testing and evaluations, the agency led successful efforts that culminated in the establishment of the first global technical regulation (GTR) under the 1998 Agreement.

This first GTR demonstrated that U.S./EU regulatory cooperation can achieve increased safety and harmonized standards that are science-based and free of unjustified requirements. If adopted into domestic law by the U.S. and EU, the GTR on door locks and door retention systems would essentially eliminate the differences between the U.S. and EU standards for reducing the likelihood that a vehicle's doors will open in a crash, thus allowing the ejection of the vehicle's occupants. Adopting amendments based on the GTR will not only result in improvements to the U.S. standard, but also to the EU standard. This will also benefit other countries since the EU standard is the United Nations' Economic Commission for Europe regulation (ECE R.11), which is used by the majority of the world community.

The U.S., as a Contracting Party of the 1998 Global Agreement that voted in favor of establishing this GTR at the November 18, 2004 Session of the Executive Committee, was obligated under the Agreement to initiate the process for adopting the provisions of the GTR.[3] On December 15, 2004, we issued a notice of proposed rulemaking closely based on the GTR, which satisfied this obligation (69 FR 75020; Docket No. NHTSA–2004–19840; NPRM). The provisions of the GTR proposed in the NPRM and adopted in today's final rule will improve the current requirements and test procedures of FMVSS No. 206, and reduce deaths and injuries from door ejections.

This final rule improves the current FMVSS No. 206 requirements in several areas. First and foremost, with respect to sliding doors, it replaces the existing requirement with new requirements and an associated full vehicle test procedure. It requires that sliding side doors either have a secondary latched position, which serves as a backup to the fully latched position and increases the likelihood that a striker will remain engaged with the latch when the door is incompletely closed, or a system to signal that the door is not fully closed and latched. The fully latched and secondary latched positions are also required to meet load test requirements and to meet inertial requirements the same way as the latches on hinged doors.

Second, this final rule requires a secondary latched position for a latch system on double-doors (previously referred to as ''cargo-doors''). Third, it adds a dynamic inertial test procedure to FMVSS No. 206 as an optional alternative to the current inertial calculation. Such a test procedure has been conducted in Europe for type approval purposes. Fourth, this document adds new requirements for side doors with rear mounted hinges to prevent potential inadvertent openings while the vehicle is moving. Fifth, this document adds minor modifications to our door lock requirements.

This document also extends the application of FMVSS No. 206 to buses with a gross vehicle weight rating (GVWR) of 4,536 kg (10,000 pounds) or less, including 12–15 passenger vans. Finally, today's final rule eliminates an exclusion from the requirements of FMVSS No. 206 previously provided to vehicle doors that were equipped with wheelchair platform lifts.

With the improvements adopted in this rule to address non-rollover door ejections, we estimate that we will prevent 7 deaths and 4 serious injuries, annually. These benefits come primarily from the changes to the sliding door requirements and test procedure. The total costs of these improvements are estimated to be slightly over $8 million.

Vehicle manufacturers, and ultimately, consumers, both here and abroad, can expect to achieve cost savings through the harmonization of differing sets of standards when the contracting parties to the 1998 Global Agreement implement the new GTR. Further, adopting amendments based on the GTR not only result in improvements to the FMVSS No. 206, but also to the door lock and door retention component regulation of the United Nations' Economic Commission for Europe (ECE R.11), which is used by the majority of the world community. In addition to the sliding door test procedure, the side door with rear mounted hinge requirements, and the inertial test procedure that are discussed above, ECE R.11, when amended per the GTR, will benefit from the inclusion of back door requirements and rear door locking requirements. To date, those requirements have been in place only in the U.S. and Canada.

II. Background

A. Safety Problem

As originally established, FMVSS No. 206 was intended to reduce the likelihood of occupant deaths and injuries resulting from ejections through door openings by keeping vehicle doors closed in crashes. The opening of these doors was primarily due to structural failures in the latch, striker, or hinges. Sheet metal failures in the door structure or the B-pillar were rare. In crashes involving the opening of doors, the latch, striker, and hinges were subjected to tensile and compressive forces along the vehicle's longitudinal (forward-to-aft) and lateral (side-to-side) axes. Based on these findings, the automotive community concluded that the most effective means of reducing door openings would be through increasing the strength of the door retention components. In 1964, the

[2] The 1998 Global Agreement was concluded under the auspices of the United Nations and provides for the establishment of globally harmonized vehicle regulations. This Agreement, whose conclusion was spearheaded by the United States, entered into force in 2000 and is administered by the UN Economic Commission for Europe's World Forum for the Harmonization of Vehicle Regulations (WP.29).

[3] While the Agreement obligates such contracting parties to begin their processes, it leaves the ultimate decision of whether to adopt the GTR into their domestic law to the parties themselves.

Society of Automotive Engineers (SAE) developed and issued the first test procedures designed to address door retention components: SAE Recommended Practice J839, *Passenger Car Side Door Latch Systems* (SAE J839); and SAE Recommended Practice J934, *Vehicle Passenger Door Hinge Systems* (SAE J934).

As initially issued in the early 1970s, FMVSS No. 206 was based, in large part, on the SAE recommended practices in existence at that time, except that NHTSA increased the test force requirement in the lateral direction.[4] Aside from the changes made in 1995 to address back door openings, no significant changes have been made to the current regulation since the early 1970s. Even with the strengthened door retention components required by the standard, ejections due to door openings still account for 15 percent of all ejections.

In further analyzing the door ejections, the agency found that, on an annual basis, during the study period, of the 15 percent (7,622) of vehicle ejections that occurred through a door, 4,533 ejections occurred in non-rollover crashes (*i.e.*, frontal, side, and rear impact crashes) versus 3,089 ejections in rollover crashes.[5]

A portion of door ejections due to non-rollover door openings occurred through sliding door openings and from doors in 12–15 passenger vans. Of those ejected through a sliding door, approximately 20 people are killed and 30 people are seriously injured each year, based on the 1995–2003 data from NASS. Based on the 2003 sales data, about 85 percent of vans sold in the U.S. have sliding doors. Only 15 percent of vans sold have double doors.

We are particularly concerned that the individuals with the greatest exposure to sliding door failures are children. Children sit in the back of vehicles in disproportionately high numbers.[6] We do not believe that this exposure is acceptable when measures can be taken to minimize the likelihood that a sliding door would open in a crash. With the increasing popularity of vehicles with sliding doors on both the driver and passenger side of the vehicle, we expect the number of overall sliding door failures to increase unless the doors are required to be designed in a way that reduces the likelihood of a door opening.

B. Harmonization Efforts and the Proposed Upgrade

1. Global Technical Regulation (GTR)

The agency's efforts to update the requirements and test procedures of FMVSS No. 206 in order to address the safety issues elucidated above coincided with the adoption of the initial Program of Work of the 1998 Global Agreement. Globally, there are several existing regulations, directives, and standards that pertain to door lock and door retention components. As all share similarities, the international motor vehicle safety community tentatively determined that these components might be amenable to the development of a GTR under the 1998 Agreement. The Executive Committee of the 1998 Agreement charged the Working Party on Passive Safety (GRSP) to form an informal working group to discuss and evaluate relevant issues concerning requirements for door locks and door retention components and to make recommendations regarding a potential GTR.[7]

The United States of America (U.S.) led the efforts to develop the recommended requirements for the GTR. The U.S., through this agency, sought to work collaboratively on door ejections with other contracting parties to the 1998 Global Agreement, particularly Transport Canada, the European Union, and Japan. The GRSP considered all relevant standards, regulations, and directives and evaluated alternative requirements and test procedures developed and presented by the U.S. and Canada, as well as refinements suggested by other GRSP delegates and representatives. The GRSP concluded its work and agreed to recommend the establishment of a GTR to the Executive Committee. A detailed discussion of the development of the GTR was provided in the NPRM.

On November 18, 2004, the Executive Committee approved establishment of the GTR. The established GTR includes improvements over the current FMVSS No. 206. With respect to sliding doors, the GTR provides a replacement for the existing U.S. requirements and a new full vehicle test procedure. It also specifies that sliding doors either have a secondary latched position or a door closure warning system that signals if a door is not fully closed. For vehicles with side doors with rear mounted hinge systems, the GTR adds new requirements to prevent potential inadvertent openings while a vehicle is moving. The U.S., as a Contracting Party of the 1998 Agreement that voted in favor of establishing this global technical regulation, was obligated to initiate rulemaking to adopt the provisions of the GTR.

2. Notice of Proposed Rulemaking

On December 15, 2004, the agency issued a notice of proposed rulemaking proposing to update FMVSS No. 206 and provide consistency with the GTR (69 FR 75020). First and foremost, with respect to sliding doors, we proposed to replace the existing requirement with new requirements and an associated full vehicle test procedure. We also proposed to require sliding doors to have either a secondary latched position or a door closure warning system to signal that a door is not fully closed. Under the proposal, the fully latched and secondary latched positions would also be required to meet load test requirements and inertial requirements the same way as the latches on hinged doors.

Second, we proposed to require a secondary latched position for double-doors, currently referred to as ''cargo-doors.'' This requirement already exists in the European and Japanese regulations. Third, we proposed in the NPRM to add a dynamic inertial test procedure to FMVSS No. 206 as an optional alternative to the current inertial calculation. Such a test procedure has been conducted in Europe for type approval purposes. Fourth, we proposed to add new requirements for side doors with rear mounted hinges. Fifth, we proposed to revise the requirements for door locks. Finally, we proposed to extend the application of FMVSS No. 206 to buses with a GVWR of 4,536 kg (10,000 pounds) or less, including 12–15 passenger vans, and to remove an exclusion for vehicles equipped with wheelchair platform lift systems.

3. Public Comments

The agency received comments in response to the NPRM from motor vehicle manufacturers, motor vehicle manufacturer trade associations, vehicle component manufacturers, an advocacy

[4] The force was increased to reduce the number of door openings resulting from occupant impacts on the interior of the door. SAE responded by adopting the same lateral force requirement in SAE J839.

[5] The rate for ejection through a door in rollover crashes (0.75 percent) is higher than in non-rollover crashes (0.10 percent). However, the actual number of ejections in non-rollover crashes is higher. For further discussion on rates of rollover and ejection see Section IV. Scope of the Safety Problem, in the NPRM.

[6] ''Child Restraint use in 2002: Results from the 2002 NOPUS Controlled Intersection Study.'' *http://www-nrd.nhtsa.dot.gov/pdf/nrd-30/NCSA/Rpts/2003/ChildRestraints.pdf.*

[7] The GRSP is made up of delegates from many countries around the world, and who have voting privileges. Representatives from manufacturing and consumer groups also attend and participate in the GRSP and informal working groups that are developing GTRs. Those that chose not to participate are kept apprised of the GTR progress from progress reports presented at the GRSP meetings.

organization, and an individual citizen. Comments were submitted by: Nissan North America (Nissan); Porsche Cars North America (Porsche); America Honda Motor Company Limited (Honda); Blue Bird Body Company, a bus manufacturer (Blue Bird); Alliance of Automobile Manufacturers (Alliance); Association of International Automobile Manufacturers, Inc. (AIAM); Truck Manufacturers Association (TMA); TriMark Corporation, a door latch manufacturer (TriMark); Delphi, a vehicle component manufacturer; Advocates for Highway Safety, an advocacy organization (Advocates); and Barb Sachau, a private citizen.

Vehicle component manufacturers, motor vehicle manufacturers, and their representative associations generally supported the proposed rulemaking as well as the GTR process. These commenters did raise issues regarding some of the proposed test requirements and test procedure specifications. Some of these commenters also requested additional clarification of the proposed rule.

Advocates generally opposed the GTR process as lacking an opportunity for involvement from public interest groups. Advocates also generally opposed the proposed rulemaking, stating that it was not stringent enough and would not provide adequate protection against passenger ejection. Ms. Sachau generally requested stronger standards for vehicle doors.

III. SAFETEA–LU

On August 10, 2005, the President signed into law the Safe, Accountable, Flexible, Efficient Transportation Equity Act: A Legacy for Users (SAFETEA–LU; Pub. L. 109–59; 119 Stat. 1144). SAFETEA–LU contains a variety of provisions directing the Secretary of Transportation to undertake rulemakings for the purpose of improving motor vehicle safety. Specifically, § 10301(a) requires that the rulemaking proceeding initiated to upgrade FMVSS No. 206 be completed no later than 30 months after the enactment of SAFETEA–LU. Today's final rule fulfils that directive.

IV. Upgrade to FMVSS No. 206

A.The GTR Process

As explained above, our proposal to revise and update FMVSS No. 206 was coincident to the international effort to establish a GTR for door latch systems and locks. Advocates expressed concern that by coordinating efforts to update FMVSSs with the GTR process, there would be only marginal changes in vehicle safety protection and performance. Advocates also expressed concern with the apparent lack of opportunity for safety organizations to be involved in the GTR process, and that an ''after-the-fact'' presentation of a draft GTR threatens to abridge the agency's authority.

This comment by Advocates reflects a fundamental misunderstanding of the GTR process. Contrary to Advocates' comment, consumer groups have an opportunity to be involved in all aspects of the GTR process.

The GTR process was transparent to country delegates, industry representatives, and public interest groups. Information regarding the meetings and negotiations was publicly available through notices published periodically by the agency and the UNECE Web site.[8] Consumer groups, through Consumer International, participated in the debates and negotiations of GRSP. In the U.S., notice of the proposal to develop a door lock and door retention GTR was published in the **Federal Register** (68 FR 5333; February 3, 2003; Docket No. NHTSA–03–14395). Comments were received and considered from Advocates and the Insurance Institute of Highway Safety. On October 8, 2004, the agency again discussed the GTR proposal (69 FR 60460; October 8, 2004; Docket No. NHTSA–03–14395). No comments were received on this notice.

Further, once the GTR is agreed upon, all contracting parties that voted in favor of adopting it must then initiate their domestic rulemaking process to adopt the GTR. NHTSA published a proposal to implement the GTR and offered its justifications for adopting the proposed changes. Those justifications were not simply a recitation that the changes were in the GTR. Instead, NHTSA offered a point-by-point explanation of why it believed the proposed changes were better policy for the American public. The public was given the same opportunity to comment and be involved in this proposed rulemaking as any other NHTSA rulemaking.

NHTSA then evaluates those comments and makes appropriate changes to the proposal in response to the comments and other new information that may become available. The fact that the proposal was developed from a GTR doesn't free the agency of its legal obligations, including the obligation to respond to all significant comments. Thus, it is not apparent why Advocates suggested that comments on proposals based on GTRs are ''after the fact.''

Of course, when NHTSA does not adopt the proposed version of a GTR, the agency will report the changes made in the United States back to the Executive Committee of the 1998 Agreement. Based on comments to the NPRM in this rulemaking, there are some minor differences between the Final Rule and the GTR. With the acceptance of the GTR, the GRSP recognized that further refinements and improvements to the language and test procedures would be needed and planned to identify these through the U.S. regulatory process. Over the last year, NHTSA has reported to GRSP that, as a result of comments to the NPRM, we would be making minor clarifications to the test procedures and the regulatory language in the U.S. safety standard. Once the Final Rule is published, the GRSP is expecting the U.S. proposal to amend the GTR to align the text of both requirements.

We repeat that the GTR process offers tangible benefits for the American public. By participating in the GTR process, we were able to develop a better regulation by advancing our research efforts and leveraging resources through partnering with other countries. If we were to have undertaken revisions to FMVSS No. 206 independent of the GTR process, the agency would have incurred higher costs and would have required additional time to move forward with the rulemaking. The international effort helped identify concerns and difficulties that were present in requirements and test procedures that NHTSA was planning on proposing in the NPRM and resulted in improvements that the agency could not have achieved on its own. Through this international cooperation the sliding door test procedures were validated by another country, which identified problems in the existing test procedures which resulted in the improved procedure and regulatory language adopted in this document. Additionally, from testing already conducted in Europe, we were able to add a test procedure for the existing optional dynamic inertial test for which NHTSA had no test procedure previously.

B. Definitions

The agency is essentially adopting the definitions for FMVSS No. 206 as proposed, and with additional clarification of the definitions for ''primary door latch'' and ''auxiliary door latch.'' Today's rule requires that each hinged door system be equipped with at least one primary door latch

[8] See *www.unece.org*; click on ''Meetings,'' and Committee on Inland Transportation.

system, which is defined as consisting of at a minimum, a primary door latch and a striker. A primary latch was defined in the NPRM and GTR as a latch equipped with both a fully latched and a secondary latched position. Conversely, an auxiliary latch was defined as a latch equipped with a fully latched position and fitted to a door or door system equipped with a primary latch. An auxiliary latch may be equipped with a secondary latched position, but it is not required to meet the secondary latch requirements mandated for a primary latch.

A problem occurs in identifying the primary latch on a door or door system if the door or door system is also equipped with an auxiliary latch that has a secondary latch position. If both latches have a secondary latched position, it is not obvious which latch is the primary latch. At the GRSP, the International Organizations of Motor Vehicle Manufacturers (OICA) requested that the definitions of primary and auxiliary latches be revised in order to differentiate between the two types of latches for compliance purposes. Today's rule requires manufacturers to designate one of the latches as the primary latch in connection with their certification of compliance and to identify the primary door latch when asked to do so by the agency. Such a request would be made in connection with an agency inquiry regarding compliance with the standard. Also the definition of ''auxiliary latch'' adopted in today's document clarifies that an auxiliary latch may be equipped with a secondary latched position. NHTSA has already proposed an amendment to the GTR to reflect these clarifications, and the amendment was accepted by GRSP.

C. Hinged Doors Requirements

1. Load Tests

FMVSS No. 206 specifies load test requirements for latch and hinge systems on hinged side doors in the longitudinal and transverse directions. We did not propose significant changes to the existing requirements for latches on hinged side doors. Consistent with the GTR, we proposed regulatory text that removed any implication that the latch load is applied relative to the vehicle orientation. In the NPRM, we proposed to require a secondary latched position for ''double doors,'' which had been referred to as cargo-doors in FMVSS 206. To the extent a requirement for the secondary positions may prevent inadvertent door openings, we believe it would be beneficial for double doors. This requirement already exists in the ECE standard. We also proposed for the transverse requirement to apply to a primary door latch system in the fully latched and secondary latch position and to an auxiliary door latch system in the fully latched position. We are adopting the load test requirements as proposed, but with corrections and clarifications as suggested by commenters.

Comments from manufacturers generally supported the side door hinge system requirements as proposed. The Alliance generally agreed with the proposed rule as applied to hinged doors but requested additional clarification and corrections to the requirements as proposed. It requested clarification that the vertical hinge load requirement at S4.1.2.1(d) applies to back doors only. TMA requested clarification as to whether the vertical load test procedure in S5.1.2.3(c) applies only to back doors. The Alliance also requested that the sign conventions used for the vehicle coordinate reference system be changed to correspond to SAE J1100 Feb 2001 and SAE J211–1 Dec 2003. The Alliance requested that the section titles for S4.1.1 and S5.1.1 be revised to reflect that these sections apply to primary and auxiliary latches and latch systems. It commented that the test plate specification for the secondary latched position (S5.1.1.1(b)(4)) should also apply to the fully latched position. The Alliance also noted that the reference to S4.2.3 in S5.1.1.4 appears incorrect.

The Alliance and TMA are correct in that the vertical load requirement of S4.1.2.1(d) and the vertical load test procedure in S5.1.2.3(c) apply only to back doors that open upward. The regulatory text has been changed to clarify the application of these sections. Today's rule also incorporates sign conventions for the vehicle coordinate reference system consistent with SAE J1100 Feb 2001 and SAE J211–1 Dec 2003. Consistent use of sign conventions between FMVSS No. 206 and the SAE standards will minimize any potential for confusion. Today's rule also amends the headings for S4.1.1 and S5.1.1 to reflect that these sections apply to primary and auxiliary latches and latch systems. We are also revising S5.1.1.4 to correctly reference S4.2.1.3, instead of S4.2.3. The above clarifications will also be included in the U.S. proposal to amend the GTR.

Advocates commented that the requirements for latch systems on hinged side doors as proposed were not stringent enough and that primary and auxiliary latch systems should be subject to the same requirements. The commenter stated that the load requirements do not replicate real world crash levels and continue to allow the use of the forkbolt striker engagement design. Advocates also objected to double door auxiliary latches not being subject to transverse load requirements. Advocates further commented, that while it supported the agency's proposal for secondary latching on double doors, the proposed load test is incomplete and does not replicate real-world crash forces that could result in the failure of the traditional fork/bolt and pin/striker designs used for double door closures.

NHTSA does not agree with Advocates' assertion that the proposed requirements were not sufficiently stringent. NHTSA has done numerous studies regarding real-world door latch loading. *See* Docket No. 3705. The analyses of the data in those studies concluded that there is no evidence that increased latch strength would reduce ejections through the door. First door openings in a crash are an infrequent event. Using the 1995 to 2003 NASS data, door openings occur in less than one percent of all vehicle crashes. When door openings do occur, they are overwhelmingly a result of a failure of the supporting structure, not the latch mechanism. *See* Docket No. 3705–11.

As discussed in the NPRM for this rulemaking, NHTSA has devoted its efforts to developing a test that will assess the potential for structural failure. This combination test procedure would be capable of testing at higher and more complex loading conditions, and would better simulate loading in rollover crashes. However, as also discussed in the NPRM for this rulemaking, that test is not yet sufficiently developed to allow us to propose it in this rulemaking. Nevertheless, NHTSA is continuing its work on this test.

The GRSP made the following commitments with respect to the combination test:

> The adoption of the combination test into the GTR is not supported at this time due to the technical difficulties in conducting the test. Instead, the Working Party delegates and representatives will continue to review work on the modification of the United States of America-based procedure, or the development of a new procedure, to capture the benefits associated with a test addressing door failures due to simultaneous compressive longitudinal and tensile lateral loading of latch systems in real world crashes. Any acceptable procedure developed could then be added to the GTR as an amendment. ECE/TRANS/180/Add.1; page 11.

Thus, there is a consensus within GRSP that devoting resources to developing a test that assesses the latch performance and includes an

assessment of structural failure is the approach that would reduce ejections through the door. Advocates did not provide any new information to explain why or how it has concluded that increasing the stringency of the proposed requirements would further reduce door ejections. Accordingly, NHTSA is not adopting this comment.

With regard to Advocates' concern with auxiliary latches on double doors, we recognize that there may have been some confusion with the NPRM. The preamble discussion stated that the transverse requirement would apply only to the primary and not the auxiliary door latches. This differs from the current requirement in which the latches on a single double door must jointly resist force loading in the lateral direction, *i.e.*, the transverse load requirement for each latch is determined by dividing a 9,000 N load by the number of latches on a single door. However, the proposed regulatory text would have explicitly required each primary and auxiliary latch on a double door to separately resist the entire transverse load requirement in the fully latched position.

We are adopting the transverse load requirement for latches on side hinged doors as proposed in the regulatory text of the NPRM. This revision establishes uniform latching requirements for all side hinged door latches. Both primary and auxiliary latch systems are required to comply with the entire load requirement in the fully latched position. Also as proposed, this document requires primary latch systems on hinged side doors to comply with a 4,500 N load requirement in the secondary latched position.

2. Inertial Test

FMVSS No. 206 requires that door latch systems on hinged doors and sliding doors remain engaged when subject to an inertial force of 30 g in the longitudinal and transverse directions. As FMVSS No. 206 was originally established, the agency had specified demonstration of compliance with the inertial requirement through a calculation in accordance with Society of Automotive Engineers Recommended Practice J839, or a NHTSA approved procedure.[9]

In the NPRM we proposed a dynamic inertial test as an option to the existing inertial calculation. As proposed, this provision would replace the existing provision that manufacturers may certify to an agency-approved test procedure. The proposed inertial test procedure was based on the testing conducted for United Nations' Economic Commission for Europe Regulation 11 (ECE R.11) type approval. It places inertial forces on doors, either when installed in the vehicle (full vehicle test) or when tested on a test fixture (in-frame test), in the longitudinal and transverse directions. The proposed test procedure was validated by the U.S. and Canada during the GTR process.[10] In proposing the procedure, we noted that the proposed test is similar to the testing that has been relied upon in Europe for type-approval, but that additional specificity may be required in characterizing the test fixture.

In addition to the longitudinal and transverse tests, a test in the vertical direction was proposed for back doors that open in an upward direction. This was in response to a finding by Transport Canada that the most common failure mode in the inertial tests conducted by Canada was in the direction of door opening.[11] We are adopting inertial load requirements and test procedures generally as proposed, but with a clarification regarding the force requirements under the dynamic compliance options.

Today's final rule specifies that under the dynamic compliance options, door latch systems must not disengage when subject to an inertial force as specified in the relevant test procedure. Under the proposal, the requirements for the dynamic options required that the door latch system not disengage when subject to an inertial load of 30g. Today's final rule clarifies that door latch systems must not disengage when subject to a 30g inertial force when applied as specified in the test procedure. Further, the test procedure adopted today specifies that the force is measured based on the acceleration of the sled. This is consistent with the sled test procedure specified in S13 of FMVSS No. 208, *Occupant Crash Protection*. These clarifications and those noted above will be included in the U.S. proposal to amend the GTR.

In its comments, Advocates claimed that vertical force inertial testing should be required for side as well as rear doors, particularly side sliding doors equipped with only a single latch system. Moreover, Advocates contended that reliance on foreign test results is not acceptable. With respect to the Transport Canada test, Advocates stated that the testing did not rely on a demanding protocol and did not reproduce vertical forces, including roof crush strength demands that would be applied to vehicles in a roll-over.

Advocates did not provide an explanation as to why it believes reliance on foreign test results is not acceptable. The agency believes that one of the benefits of establishing global technical regulations is that it leverages available data from other countries, thereby allowing better allocation of agency resources and establishment of safety requirements more quickly than if the testing and development were conducted solely by NHTSA.

The inertial test requirements and procedures adopted today are based upon those that have been used successfully for many years under type-approval certification systems. However, further specifications for self-certification systems were necessary. Based upon testing performed by Transport Canada in association with NHTSA, we determined that the results and protocol sufficiently validate the feasibility of the procedure, and that the inertial test requirements adequately reflect the crash conditions experienced by the U.S. fleet.

As noted in the NPRM, we believe that secondary latches will be necessary for sliding doors to pass the new test. The primary basis for Advocates' argument for a vertical inertial test appears to be that sliding doors have only one latch. However, we believe the sliding door test requirement will nullify this argument. Furthermore, we at this time have no testing or data to suggest effectiveness of a vertical inertial test requirement, nor did Advocates provide any.

As stated in the NPRM, the focus of the GTR and the NPRM were to address door system failures in non-rollover crashes. As noted above, a combination test procedure was developed to replicate more complex loading experienced in frontal, rear and side offset and oblique crashes. However, difficulties were encountered with the test procedure due to the inability to conduct the test on some types of latches. This inability precluded our adopting the procedure for this rulemaking.

With regard to certification, the Alliance noted that manufacturers often rely on testing a ''body-in-white'' vehicle (*i.e.*, a pre-production developmental vehicle), whereas the FMVSS No. 206 test procedures specify testing on post-production vehicles. The Alliance requested the agency to

[9] As discussed in the NPRM, NHTSA approved a GM test procedure in the 1960s. Since that time, no other requests have been approved. Such an approach is inconsistent with the agency's usual practice over its history, which is to include test procedures in the regulatory text of the standard, either directly or by incorporation by reference.

[10] See presentation from Transport Canada in the DOT Docket NHTSA–1999–3705.

[11] Id.

confirm its understanding that manufacturers are not required to test post production vehicles for purposes of certification.

The Alliance is correct in that the test procedures in FMVSS No. 206 are not requirements. Manufacturers certifying compliance with the safety standards are not required to follow exactly the compliance test procedures set forth in the applicable standard. In fact, manufacturers are not even required to conduct any actual testing before certifying that their products comply with applicable safety standards. However, to avoid liability for civil penalties in connection with any noncompliance that may be determined to exist, manufacturers must exercise ''reasonable care'' to assure compliance and in making its certification (49 U.S.C. 30115). It may be simplest for a manufacturer to establish that it exercised ''reasonable care'' if the manufacturer has conducted testing that strictly followed the compliance test procedures set forth in the standard. However, ''reasonable care'' might also be shown using modified test procedures, such as testing on a body in white, if the manufacturer could demonstrate that the modifications were not likely to have had a significant impact on the test results. In addition, ''reasonable care'' might be shown using engineering analyses, computer simulations, and the like.

3. Door Hinges

The load testing requirements for door hinges in the GTR are the same as those currently in FMVSS No. 206 and ECE R.11. The agency believes that the side door requirements for hinges, which are based on SAE Recommended Practice J934, *Vehicle Passenger Door Hinge Systems,* adequately test the strength and design of door hinges. NHTSA has fully analyzed its crash data and possible failure modes associated with the failure of door retention components. We have not identified a significant safety problem with door hinges currently installed in vehicles. Accordingly, we are not changing the door hinge requirements of FMVSS No. 206, although we are articulating the test procedure for door hinges rather than relying on a modified incorporation by reference of the applicable SAE J839 recommended practice.

D. Side Sliding Door Requirements

1. Side Sliding Door Latch Requirements

In the NPRM, we proposed to require sliding doors to have either:

1. A primary door latch system that meets the same requirements as primary door latch systems on hinged side doors (*i.e.*, has both a fully and secondary latched position), or

2. A system with a fully latched position and a door closure warning system to alert the driver when the door is not in the fully latched position.

We stated that this second option would ''assure vehicle occupants that a sliding door is completely closed.'' 69 FR 75026.

Advocates objected to the option of equipping a sliding door with a door closure warning system instead of requiring all sliding doors to be equipped with a secondary latch position. Advocates also questioned the effectiveness of a door closure warning system. That commenter stated that the agency should not provide a compliance option that relies on occupant behavior, as opposed to a mechanical solution, to ensure that occupants will not be ejected through a door that is not fully closed.

It is appropriate to begin with the current requirements in FMVSS No. 206 to consider this comment. At present, FMVSS No. 206 does not require either a primary or a secondary latch system for sliding doors. The only requirement currently applicable to sliding side doors in the U.S. is set forth in S4.3, which provides that the track and slide combination shall not separate when a total transverse load of 17,800 Newtons is applied. There are currently no requirements for the individual latch components.

The proposed GTR upgrades the U.S. requirements to require, in addition to the existing loading requirement, a latch with a fully latched position that meets additional loading requirements. We believe these new requirements achieve Advocates' suggestion that a mechanical solution is more dependable than one that requires some human behavior. The fully latched position and the associated loading requirements are vehicle attributes added in this rule.

As a backup, the proposed rule also provided for some supplemental protection. The first option is to permit a reduced level of protection when the latch is not in the fully latched position. Under this alternative, the latch must have a secondary latched position, which is subject to loads 50% or less of what the fully latched position must meet. The second option is to alert the driver that the latch is not in the fully latched position, with the expectation that the driver will close the sliding door so that it is fully latched and receive the protection associated with the fully latched loading requirements.

These options for backup protection for sliding door latches not in the fully latched position have been permitted in the ECE regulations for decades now. During the discussions of the GTR, the European governments said there were no data showing better ejection prevention with either of the options. NHTSA has no data showing a problem, since neither has been required in the United States, and Advocates did not provide any data in its comments. Given that the available data in Europe do not show a problem with either approach, NHTSA has no reason to change its proposed upgrade of the sliding door requirements in Standard No. 206.

2. Side Sliding Door Test Procedure

In addition to the new requirement for side sliding door latches, the NPRM also proposed a sliding door test procedure that evaluates the door as a complete system. FMVSS No. 206 currently does not include a sliding side door test procedure. Since the test produces some level of longitudinal force, in addition to the direct lateral loading, the door components deform and twist. Therefore, compliant door latch systems will be required to more robust than was required in the past.

We proposed a full vehicle test in which a sliding door is tested by applying force against the two edges of the door. The proposed test setup is initiated by placing two loading plates against the interior of the door. The loading plates are placed on top of the latch/striker system located at the door edge. If the door edge has two latch/striker systems along one edge, the loading plate is placed between the two systems. If a door edge does not have a latch/striker system, the loading plate is placed at a point midway along the length of the door edge. An outward lateral force of 18,000 N total is then applied to the loading plates (*i.e.*, 9,000 N is applied to each plate).

The proposed test procedure for the sliding door transverse loading test specifies that the force application device would be mounted on the vehicle floor. A test failure would be indicated by (1) A separation which would permit a sphere with a diameter of 100 mm to pass unobstructed between the interior of the vehicle to the exterior at any point, or (2) the force application device reaching a total displacement of 300 mm. The proposed 100 mm of separation requirement, even if the latch system does not fail, accounts for partial ejections through separation of sliding doors from the frame without the latch system failing. The 100 mm limit is based on a commonly used measurement for

maximum allowable open space in the U.S. and Canada for school bus opening requirements.

In general, we are adopting the sliding door test procedure as proposed. We are making several changes to the test procedure set-up and the test procedure operation in response to concerns raised by manufacturers. The changes noted below will also be included in the U.S. proposal to amend the GTR.

a. Compression Verses Tension

Motor vehicle manufacturers raised several concerns regarding the sliding door test procedure, particularly with the test set-up. The Alliance suggested applying the force loads in tension as opposed to compression.

The procedure adopted in this rule specifies that the force loads are applied in compression. In early testing, Transport Canada applied force loads in tension. However, Transport Canada abandoned this force application method because of the extent of modifications needed to the door being tested and the resulting deformation that occurred at the attachment points. The necessary modifications and the deformation resulted in unacceptable testing variability.

b. Test Device and Set-Up

With regard to the force application device as specified in the proposed test procedure, Nissan and the Alliance favored mounting the device external to the vehicle, instead of on the vehicle floor. These commenters expressed concern that mounting the force application device inside the vehicle could deform the vehicle floor and allow the device to move from its original position when applying a load. This, they stated, would introduce a significant amount of test variability.

The agency experienced similar concerns with the mounting of the test device, but resolved the issue through use of reinforced plates. The reinforcement plates provided a level surface for the support of the loading device. The plates also distribute loading on the floor of the test vehicle to reduce the movement of the device that could otherwise occur due to localized deformation at the attachment points.

During a May 11, 2005 meeting between the agency and the Alliance, the Ford Motor Company presented the results of evaluation testing, which demonstrated that use of the reinforcement plates on the vehicle floor avoids problematic displacement while under loading.[12]

Both the agency and commenters have demonstrated the ability to apply the requisite load to a vehicle door without causing displacement of the force application device. In order to minimize potential test variability, the final rule specifies that a loading device is to be rigidly mounted when applying a load.

As proposed in the NPRM, the load is applied to a vehicle door through force application plates attached to the ram arms of the force application device. Nissan asked if the proposed sizes for the plates are correlated with a potential load area resulting from an occupant that impacts the interior of the door.

NHTSA based the size of the force application plates on three considerations. First, the width of each load plate, 50 mm (2 inches), is designed to locate the center of the load application over the latch on each door edge (a distance of 25 mm (1 inch) from the door edge). Second, the length of the smaller plate (150 mm (6 inches)) is selected to give an area large enough to prevent the loading rams from pushing through the sheet metal of the door. In developmental testing, the 150 mm plate did not push through sheet metal.[13] Third, the length of the larger load plate (300 mm (12 inches)) is based upon a measurement that is compatible to the interior contour of most door edges. The door edge contours (especially along the top half of the door) of many of vehicles tend to be highly curved, which dictates where the load plates can be positioned. If a plate is too long, the contour of a door may interfere with the load application.

We proposed that a force application plate 300 mm in length, 50 mm in width, and 15 mm in thickness be placed equidistant between the multiple latches on doors that have more than one latch system on a single door edge, and this plate would be used to apply the load to any tested door edge. The Alliance commented that the vertical distance between the latches on a single door could exceed one meter in length. The Alliance stated that applying force to such a door with a plate that is shorter than the distance between the latches could cause the door to bow outwards in a manner that does not directly apply loading to the latches. The Alliance stated that this bowing is not representative of a real-world crash event and recommended that the load plates be extended to a length equal to the distance between the latches plus 150 mm.

The agency is not adopting the Alliance's suggestion with regard to increasing the plate size used for testing sliding doors with more than one latch/striker system. We have concluded that the force application plate positioning proposed in the NPRM and adopted today is appropriate for testing vehicle doors that have more than one latch system, including door designs in which the latches are widely spaced.

A door edge with latches separated by a large distance (such as up to or greater than 1-meter) could increase the likelihood that an occupant impacting the interior of the door during a crash would force a gap separation. Latches with excessive separation may not provide as much structural support along the length of the entire door edge. The proposed procedure, which places the force application plate equidistant between latches, identifies such weaknesses. Further, the agency was unable to identify any vehicles that had sliding doors equipped with latches systems on a door edge that were separated by a distance comparable to that which concerned the Alliance. Therefore, the sliding door test procedure is adopted as proposed.

The Alliance also stated that vehicles are currently designed with access holes in the door sheet metal, which may not provide practicable surface area to place the force application plates in the location and manner specified in the NPRM. The Alliance recommended the use of a spreader device, which would bridge the access hole and contact the door in a manner in an area capable of transferring the load to the latch.

After reviewing the Alliance's request to specify the use of a spreader device, we conclude that such a device would distribute the load over a large section of a vehicle door instead of at the latch/striker component, which is the intent of the test. Further, a spreader device would act to reinforce a door and alter it from its original manufactured condition.

The agency considered other potential procedures to accommodate the presence of access holes. We evaluated moving the force application plate to accommodate an access hole, covering an access hole with a steel plate, and increasing the length of the force application plate to accommodate the access hole opening. However, each one of these alternatives proved to be unfeasible.

Each one of the considered options would create compliance testing difficulties. Moving the plate to accommodate an access hole would require us to specify an adequate alternative location. This may not be the same location for every vehicle. For vehicles with an exceptionally long access hole or multiple access holes, it

[12] See, Docket No. NHTSA–2004–19840–14.

[13] See Docket No. NHTSA–2004–19840–14.

could be difficult or impossible to find a suitable location for the plate. Covering an access hole changes the door from its original manufactured condition, which is undesirable for compliance testing. Increasing the length of the load plate to the size of the access hole would create test variability given that not all access holes are uniform in size and location.

With respect to access holes, we are adopting the test procedure as proposed. The Alliance did not provide test data to support an actual problem existing with force application plate size or placement and access holes. While the Alliance identified a vehicle that had access holes located in the area that the load plates would be positioned, the Alliance never conducted a test to demonstrate that the access holes actually created a problem.

Based on our examination of the vehicle identified by the Alliance, we believe that if the vehicle had been tested, the lip of the access hole (approximately, 250 mm in length) would serve to offer some resistance to the plate and eventually, as with all sliding door tests, the interior sheet metal would quickly deform until the plate was in contact with the inside of the exterior door shell. Given this condition, there should be no difference in how the test is conducted, whether with or without an access hole present. If a latch or retention component exists in the boundary of the access hole opening, we believe that there should be no reason why the plate should not be allowed to contact and to apply force loading to that component. In such an instance the load plate would apply the force directly on the retention component.

In its comments, Nissan questioned whether the procedure specified in the NPRM allows for a rotational joint at the connection between the plates and the loading arms. The Alliance noted that longitudinal displacement of the door may occur during testing, causing rotational forces and bending moments to occur between the load plates and the hydraulic rams. The Alliance recommended the procedure specify the use of socket/swivel joints at the end of the loading arms in order for the load plate to translate longitudinally and to adjust for any contour of the door. The Alliance also recommended that the procedure specify that the plate edges be rounded to a 6 mm radius to avoid the edge of the plate acting as a cutting edge that would potentially penetrate a door's sheet metal.

The procedure, as proposed, specified that the plates are permitted to rotate in the longitudinal direction relative to the loading ram. As proposed in the NPRM, the loading plates are fixed perpendicularly to the hydraulic loading arms in a manner that does not allow for rotation in a transverse direction. Additionally, the loading plates are connected directly to the hydraulic ram shafts by a threaded stud attached to the back of the plate that allows for longitudinal rotation. This longitudinal rotation allowed for better adjustment of the plates to the contour of a vehicle door and provided acceptable results in testing performed by the agency.

With regard to the permitted rotation of the force application plates, we are adopting the procedure as proposed. The agency is not adopting a procedure that would allow for rotation in a transverse direction, such as that which could be experienced if a swivel joint were used. Considerable difference in deformation patterns and in the direction of the force application potentially could result from the use of a swivel joint. The potential rotation from use of a swivel joint, *i.e.*, rotation in both the longitudinal and transverse directions, would introduce an uncontrollable degree of freedom. Past tests have demonstrated that use of a swivel joint causes extensive variability and repeatability problems.[14] Further, the test procedure specifies that the force application plates are to maintain the displacement of the force application device in the transverse direction. This ensures that as force is applied, a door system continues to experience a transverse load.

Although the agency did not experience penetration of door sheet metal from the loading plates, we recognize that without rounded edges on the plates, this may be a problem. Therefore, we are specifying that the loading plates have edges rounded to a radius of 6 mm ± 1 mm.

The proposed test procedure specified that the loading plates be placed at the ''door edge'' (S5.2.2.3(f)(3), S5.2.2.3(g)(3), and S5.2.2.3(h)(3)). The proposed test procedure also specified that all of the door trim and decorative components are to be removed during the test set-up.

In its comments Nissan stated that the term ''door edge'' could be prone to misinterpretation and asked that the term be further defined. Nissan also stated that trim components on a door pillar that overlap a sliding door could interfere with the test set-up.

The agency agrees with both of these points. Therefore, the procedure adopted today further specifies that the force application plates are placed within 12.5 mm from the interior edge of a sliding door. This specification will ensure that force is applied directly to the portion of the door in which the latch mechanism is installed. Typically, a latch mechanism is within 12.5 mm of the interior edge of a vehicle door. Further, we are specifying that pillar trim and non-structural components that overlap a door be removed to permit proper placement of the loading plates.

The Alliance commented that during its evaluation of the proposed test procedure, the loading plates would slide as the door inner panel deflected under loading. The Alliance recommended the addition of a spreader bar with swivels to be used as a connection between the load application devices. The Alliance contends that the spreader bar would: (1) Limit the longitudinal motion of the loading plates while assuring that the lateral load of 9000 N is attained at both the fore and aft edges of the door; (2) reduce sliding of the loading plates and moments into the load cells that lead to erroneous load measurements; (3) reduce the bending moments sufficiently to make the test more practicable; (4) reduce the likelihood of damage to the test equipment; and (5) reduce the risk to laboratory technicians.

Both NHTSA and Transport Canada have used a spreader bar, similar to the one requested by the Alliance, in previous testing when developing the sliding door test procedure. Based on these tests we concluded that use of a spreader bar confines the movement of the force application device, thus making it inappropriate for testing. Because the fore and aft loading plates displace unequally, a spreader bar causes the load plates to rotate and move towards one another. In testing, this resulted in abnormal bending forces produced at the connection between the plates and spreader.

The force loading device specified in NHTSA Vehicle Research and Test Center testing used to validate the proposed test procedure incorporates 5 cm box beams for the support of the structure.[15] The box beams provide adequate support and are less prone to allow displacement of the hydraulic rams. In its initial testing, the Alliance did not incorporate supports that provide the same level of support as the ones specified in today's test procedure. Therefore, we are not amending the

[14] See Docket No. NHTSA–1998–3705–33.

[15] Docket No. NHTSA–1998–3705–33.

procedure to include use of a spreader bar.

However, to control for movement of the load application device in order to further minimize test variability, the procedure adopted today limits longitudinal and vertical movements of the force application device by specifying that a device is to be rigidly mounted.

c. Application of Force

The sliding test door procedure proposed in the NPRM specified that each force application device be moved at a rate of 20–90 mm per minute until a force of 9,000 N is achieved on each device, or until either force application device reaches a total displacement of 300 mm. As proposed, if the 9,000 N force is achieved, it is held for 10 seconds.

The Alliance raised several concerns with the specified procedure for operating the force application devices. First, the Alliance requested that a 500 N pre-load be applied prior to determining the initial position of the ram arms for the purpose of measuring the transverse displacement of the ram arms. The Alliance stated that a pre-load of 500 N would ensure that the loading plates are correctly positioned and would improve repeatability of the test by eliminating the effect of free play in the system. Specifying a pre-load is consistent with the force application test procedure specified in S11 of FMVSS No. 225, *Child restraint anchorage systems*.

We agree with the Alliance that a pre-load for the sliding door test procedure would be appropriate. Therefore, we are specifying that the test loading device achieve a pre-load of 500 N. Once the pre-load is achieved the displacement measuring devices are then zeroed.

The Alliance also requested that the test procedure define the location and procedure for measuring the 300 mm of displacement. The commenter recommended that the displacement of the loading device be measured relative to an undisturbed part of the vehicle.

As explained above, we are specifying that a pre-load be applied to a sliding door, at which point the displacement measuring devices are to be zeroed. Given that we establish the point at which the displacement of the devices are zeroed and limit the movement of the force application test device, we do not believe it further necessary to measure displacement against an undisturbed portion of the vehicle. The portion of a vehicle that remains undisturbed could be different for each vehicle model, or even for each individual vehicle. By relying on the pre-load to establish the initial position of ram arm, there is no need to specify a portion of the vehicle against which to measure displacement.

Third, the Alliance recommended that the test procedure control the load force application rather than displacement. As stated above, the NPRM proposed to control the displacement (20–90 mm per minute) until a load of 9000 N is reached, and then holding the resulting load for 10 seconds. The commenter stated that controllers currently in use do not allow for simultaneous control of both displacement and load, and that the procedure as specified would raise practicability concerns.

In response to the Alliance's concern, the procedure adopted today specifies that the load be controlled at a rate not to exceed 2,000 N per minute. In the vehicle testing conducted by NHTSA, a load rate of 2,000 N per minute resulted in a displacement rate comparable to the proposed 20–90 mm displacement rate. However, we recognize that given the controllers currently in use, controlling for the load is a more practical procedure.

Additionally, we are revising the procedure to specify holding the maximum load for 30 seconds. This duration was recommended by the Alliance. We also agree that this is sufficient time to measure any gap separations between the door and doorframe as specified by the procedure.

d. Performance Requirement

The NPRM, consistent with the GTR, specified that a test failure is indicated by a 100 mm separation of the interior of the door from the exterior of the vehicle's doorframe at any point. There must not be more than 100 mm of separation even if the latch holds, to protect against partial ejections. The 100 mm limit is based on a commonly used measurement for maximum allowable open space in the U.S. and Canada for school bus opening requirements.

The Alliance recommended that we specify the use of a 100 mm sphere to on an extension rod to test the gap separation requirement. The Alliance also requested eliminating S5.2.2.3(j) from the test procedure. As proposed, this section specified that any equipment used for measuring gap separations be attached to the vehicle prior to the testing. The Alliance stated that this is not practical because a manufacturer may not be able to predict where a separation will occur.

We recognize that as a practical manner the agency and many manufacturers likely will use a test method similar to that described by the Alliance, i.e., through the use of a sphere with a 100 mm diameter attached to a rod. The agency has used a similar procedure in its sliding door evaluation testing as well as for compliance testing under FMVSS No. 217, Bus emergency exit and window retention and release. The agency has been able to perform this procedure while maintaining the safety of the technicians. However, this is only one method that could be used to measure a gap and other viable methods may be developed, such as laser or telescoping measuring devices. While compliance is described in terms of passing a sphere, we are not adopting the sphere procedure as recommended by the Alliance. We are eliminating the sphere specification in S5.2.2.3(j) to facilitate the use of the sphere method or other similar techniques.

Nissan requested clarification as to whether a noncompliance would occur in a case in which a gap separation occurred where the gap measured greater than 100 mm at the exterior opening, but less than 100 mm at the interior of the opening.

We clarify that the separation throughout the gap must exceed 100 mm for a determination of noncompliance. The example provided by Nissan would not be a noncompliance. This is consistent with the intent to limit ejections through a separation.

Both Nissan and the Alliance expressed concern that the specified period of 10 seconds for maintaining the load was not adequate to permit measurement of separations between a vehicle body and the sliding door. Nissan stated that based on its experience it could take up to a minute to make the necessary measurements. The Alliance recommended a period of 30 seconds. The Alliance stated that this would be adequate to limit deformation of the door sheet metal and still provide enough time for the necessary measurements.

The agency is revising the test procedure to specify that the load be maintained for 30 seconds. As suggested by the Alliance, we believe that it is practical to make the specified measurements in this time. As stated above, we have successfully been able to perform this measuring procedure for compliance testing under FMVSS No. 217.

E. Door Locks

As proposed, we are adopting two minor changes to the door lock requirements. First, we are distinguishing between exterior and interior door locks. All exterior door

locks must be capable of being unlocked from the interior of the vehicle by means of a lock release device which, when engaged, shall prevent operation of the exterior door handle or other exterior latch release control and which has an operating means and a lock release/engagement device located within the interior of the vehicle. Interior door locks are subject to the same requirements except that for rear side doors and back doors, this release mechanism must require a separate action distinct from the simple actuation of the door handle, and the release device must be readily accessible to the driver of the vehicle or an occupant seated adjacent to the door.

The Alliance commented that the proposed door lock provision would prohibit a common European rear door lock design that permits a vehicle door to be unlocked and unlatched with a single pull of the handle so long as the vehicle has a child safety lock or an automatic door locking device. The Alliance stated that a requirement for a separate action distinct from the simple actuation of the door handles to release rear side door and back door interior locks effectively precludes designs that have been in use for many years in Europe as well as other markets. The Alliance stated that NHTSA did not provide data demonstrating a negative effect of the GTR provision that permits these designs on motor vehicle safety, and therefore did not provide justification for not proposing the provision as contained in the GTR.

This was a subject that was discussed extensively while developing the GTR. The standard in the United States and Canada has always mandated that the interior release mechanism for the door locks on side and rear doors must require a separate action distinct from the simple actuation of the door handle. This requirement is in place because of our concern that children could inadvertently open the back door simply by playing with the door handle. A system in which a child could open a locked door with a single motion would almost certainly increase the number of inadvertent door openings and place child occupants at greater risk of ejection.

The standard for Europe and Japan has always permitted rear vehicle doors to be unlocked and unlatched with a single pull of the door handle, provided that the vehicle has a child safety lock or an automatic door locking device. This regulatory structure reflects a concern that rescuers be able to quickly open rear doors to assist passengers after a crash. These regions believe that the requirement for child safety locks allows drivers to disable this feature when children are riding in the rear seat.

Both of these are plausible safety concerns. Neither side to the dispute could provide data to resolve the problem. Absent a way to resolve this difference, the parties agreed to address the problem of inadvertent door openings by children by either the U.S./Canada approach of requiring a separate action to release locked doors in the rear or by the European/Japanese approach of requiring vehicles to have child safety locks or automatic door locking.

Against this background, the Alliance comment is not persuasive. NHTSA agrees there are no data to show that drivers wouldn't always engage the child safety locks in their vehicles. However, if even a few drivers were to fail to engage their child safety locks and a few children in the rear were to open a locked door simply by playing with the door handle, those children would be at risk for ejection, even absent a crash. This risk can be ameliorated simply by continuing to follow the same requirements that have been in place for the interior rear door locks of every new car and light truck sold in the United States since 1968. Moreover, this approach is entirely consistent with the GTR.

F. Applicability

In the NPRM, the agency proposed expanding the applicability of the standard to buses with a GVWR of less than 10,000 lb and removing an exclusion for doors equipped with a wheelchair platform lift. Historically, FMVSS No. 206 has not applied to buses in general because the types of doors installed on buses in the 1960s were not amenable to testing under the standard. The exclusion of wheelchair platform lift equipped doors was originally adopted in 1985, at which time wheelchair lift designs typically provided a barrier to occupant protection when retracted. When retracted, wheelchair lift platforms typically covered the doorway opening. Changes in the vehicle fleet and in technology from the time of original adoption of these provisions necessitate revisions to the applicability of FMVSS No. 206.

The Alliance commented that the final rule should not expand applicability of FMVSS No. 206 beyond that of the GTR. The Alliance stated that expanding the applicability undermines the GTR and mitigates the benefits of a common global technical requirement.

The agency believes that all buses with a GVWR less than 10,000 lbs should be subject to the requirements of FMVSS No. 206. These buses are often equipped with traditional side-hinged doors as opposed to folding doors. With the advent of 12- and 15-passenger vans, smaller buses are now more frequently equipped with traditional side hinged doors. For those buses that are equipped with folding doors, we are adopting a definition of ''folding door'' that will accommodate those types of doors that remain unsuitable for testing. Hinged doors on buses with a GVWR less than 10,000 are the same door systems as those found on smaller vans, which are required to comply with the standard. Additionally, we anticipate that the impact of the extension will have little additional cost to vehicle manufacturers. The agency is aware that all 12–15 passengers vans, which are classified as buses, currently share the same door system and latching components as other smaller size vans, which already meet the requirements of our standard.

Expanding the applicability of the standard to include these buses is not inconsistent with the GTR process. The GTR preamble notes that, ''to address concerns about the applicability of door retention requirements of heavier vehicles, it was proposed that the [GTR] only apply to passenger cars, light commercial vehicles, and vans, and that other vehicles be excluded initially, then added in the future after further evaluation of various door designs.'' As buses with a GVWR of less than 10,000 lbs have door designs identical to that of vehicles subject to the GTR, there is no reason to delay the inclusion of these vehicles under FMVSS No. 206. The agency intends to recommend that a similar provision be adopted by the GTR in subsequent revisions.

Today's rule also eliminates the exclusion of doors equipped with platform lifts from the FMVSS No. 206 requirements. Blue Bird stated that the elimination of this exclusion appeared only in the NPRM regulatory text, but was not discussed in the preamble. Blue Bird commented that the platform lift exclusion is important to the industry and requested that it be retained in the final rule.

As explained in the NPRM, the agency adopted the wheelchair platform lift exclusion in 1985 in response to a petition from Thomas Built Buses (50 FR 12029; March 27, 1985). At that time, wheelchair platform lifts typically retracted so as to cover the doorway opening and provide an adequate barrier to occupant ejections. When we established the exclusion the agency stated that the barrier created by a retracted wheelchair platform lift would be sufficient to prevent ejections.

A 1998 evaluation revealed that wheelchair lift designs have evolved such that they no longer provide adequate protection for vehicle occupants as contemplated when the exclusion was adopted. The intent of the exclusion was that doors could be modified for use with wheelchair lifts and could have noncompliant latching systems, if the wheelchair lift platform could be used to barricade the vehicle doorway when in the retracted and stored position. This intent is no longer met by current wheelchair lift systems, which have platforms not covering or only partially covering the vehicle doorway. For example, some wheelchair lift systems connect only to one side of a vehicle door frame or have platforms that are stored horizontally above the vehicle floor and not serving as a barricade to the vehicle doorway. Also, some power-assisted door openers completely disable the OEM door latching systems. Disabled door latches and a horizontal stored platform would not provide an adequate barrier to preventing occupant ejection if the door were to open during a crash. Further, current wheelchair lift designs can be installed without modifying the OEM door system; installation of a wheelchair platform lift does not necessitate removal of a vehicle door from compliance with FMVSS No. 206. Vehicle manufacturers are now providing power assisted components for the installation of wheelchair adaptive equipment. Therefore, the exclusion is not necessary for doors modified for use with wheelchair lift systems.

V. Certification Information

Along with its comments, Trimark also submitted a series of questions that while related to FMVSS No. 206, were not directly related to the NPRM. Trimark's questions dealt more with compliance testing procedures and self-certification requirements in general. Trimark also asked about the agency's plans to address additional door lock and door latch requirements in the future. We have addressed Trimark's questions below.

Trimark notes that S4.1.1.4 requires each primary door latch and auxiliary door latch system to meet either the dynamic requirements specified in paragraphs (a) and (b) of that section or the calculation requirement. Trimark then asked a series of questions regarding the calculation. What is the definition of the calculation?

As explained in the NPRM and presented in the proposed regulatory text, the agency uses the SAE J 839 definition for the calculation. This is consistent with the current FMVSS No. 206 requirements.

Trimark further asked if a computer simulation could be used, and could a pulse be applied in the simulation as it is in the dynamic requirement?

As explained above, FMVSS test procedures specify the procedures that will be used by the agency to determine if a motor vehicle complies with the appropriate requirements. We understand Trimark's questions regarding the computer simulation to refer to a simulation of the dynamic requirements. If using reasonable care, Trimark relies on modeling to certify to the dynamic test, it may do so. However, if Trimark were to certify to the dynamic test, the agency would perform the appropriate dynamic test as specified in the standard to determine if a vehicle complies.

Trimark noted that in the NPRM the agency referenced a comprehensive plan to address vehicle rollover. Trimark asked if the plan was subject for public review.

In June 2003 the agency released the report, ''Initiatives to Address the Mitigation of Vehicle Rollover.'' This report is available at *http://www-nrd.nhtsa.dot.gov/vrtc/ca/capubs/IPTRolloverMitigationReport/*.

Trimark also noted that the agency stated that we developed test procedures for door closure and operability requirements, but that these tests need to be validated before issuing a separate notice. Trimark asked if these test procedures are available for public review.

The agency has not yet proposed door closure and operability requirements. Therefore, test procedures have not been published for review and comment in a notice of proposed rulemaking. Research results for the test procedures can be reviewed in Docket NHTSA–2004–19840.

VI. Costs, Benefits, and the Effective Date

This document adds and updates test procedures for door latches. We believe that only one of these, a new sliding door test procedure for FMVSS No. 206, will add costs to vehicles and provide quantifiable benefits for consumers. The agency determined that, aside from sliding doors that require the addition of a second latch in order to comply with the requirements as tested under the procedure adopted in the final rule, the current fleet complies with the final rule adopted today. Further, manufacturers failed to provide any data which indicates that non-compliant vehicles will need significant changes or extended timing to come into compliance with the proposed upgrades.

The average annual ejections through sliding doors from 1995–2003 resulted in 20 fatalities and 30 injuries. When an occupant is retained in a vehicle and the ejection is eliminated, it does not necessarily mean that the occupant escapes injury. When all vehicles with sliding doors meet this proposal, annually an estimated 7 fatalities and 4 occupants with serious to severe injuries will be reduced in severity to minor injuries (AIS 1) as a result of remaining inside the vehicle.

There were almost 1.4 million vans with sliding doors sold in 2003. The total number of sliding doors (more than 2 million) of these vans is higher because some of the vans have two sliding doors. The sliding door requirement, as tested according to the new test procedure, essentially requires sliding doors to have two latches. An estimated 1.2 million sliding doors (60%) on 660,000 vans (48%) need a second latch to comply. Most of the affected vans have two sliding doors. The incremental cost of adding a second latch is estimated to average $7.00 per door. Total costs are estimated at $8.4 million (in 2003 economics).

The Alliance requested that manufacturers be permitted to comply with the final rule according to a phase-in schedule consistent with that proposed by the agency for the side impact upgrade (69 FR 27990; May 17, 2004; Docket No. NHTSA–2004–17694). The Alliance stated that vehicles which will require the addition of a second latch would require major structural modifications to the B-pillars and doors to accommodate a two-latch design.

After considering the comments, the agency has decided to establish an effective date of September 1, 2009. Optional early compliance is permitted immediately. This provides manufacturers adequate time to make the necessary design changes. We do not believe it would be appropriate to tie the effective date for this rule with that of the side impact upgrade, since that would result in unnecessary delay in obtaining the benefits from this rule. The tests for the two rulemakings are very different, and the test for this rule is not a dynamic crash test. As mentioned above, the majority of vehicles already comply with the proposed upgrades of this rulemaking, and those not currently complying should not need significant changes to come into compliance.

VII. Regulatory Analyses and Notices

A. Vehicle Safety Act

Under 49 U.S.C. Chapter 301, *Motor Vehicle Safety* (49 U.S.C. 30101 *et seq.*), the Secretary of Transportation is responsible for prescribing motor vehicle safety standards that are practicable, meet the need for motor vehicle safety, and are stated in objective terms. 49 U.S.C. 30111(a). When prescribing such standards, the Secretary must consider all relevant, available motor vehicle safety information. 49 U.S.C. 30111(b). The Secretary must also consider whether a proposed standard is reasonable, practicable, and appropriate for the type of motor vehicle or motor vehicle equipment for which it is prescribed and the extent to which the standard will further the statutory purpose of reducing traffic accidents and associated deaths. *Id.* Responsibility for promulgation of Federal motor vehicle safety standards was subsequently delegated to NHTSA. 49 U.S.C. 105 and 322; delegation of authority at 49 CFR 1.50.

The agency carefully considered these statutory requirements in adopting these amendments to FMVSS Nos. 206.

The amendments to FMVSS No. 206 will be practicable. This document does not adopt significant changes to the current requirements of FMVSS No. 206. With regard to the sliding door requirement tested according to the new test procedure, 40 percent of current sliding doors already would comply. Additionally, the amendments harmonize the U.S. requirements with the global technical regulation.

These amendments are appropriate for the vehicles subject to the requirements. Today's final rule continues to exclude vehicle doors for which the requirements and test procedures are impractical or unnecessary (*e.g.*, folding doors, roll-up-doors).

Finally, the agency has determined that the amendments provide objective procedures for determining compliance. The test procedures have been evaluated by the agency, and we have determined that they produce repeatable and reproducible results. The sliding door load test procedure and the inertial test procedure have also been evaluated by the international automotive community, which has determined them to be practicable. Further, we are adopting test procedures to provide additional objectivity to existing requirements.

B. Executive Order 12866 and DOT Regulatory Policies and Procedures

Executive Order 12866, ''Regulatory Planning and Review'' (58 FR 51735, October 4, 1993), provides for making determinations whether a regulatory action is ''significant'' and therefore subject to Office of Management and Budget (OMB) review and to the requirements of the Executive Order. The Order defines a ''significant regulatory action'' as one that is likely to result in a rule that may:

(1) Have an annual effect on the economy of $100 million or more or adversely affect in a material way the economy, a sector of the economy, productivity, competition, jobs, the environment, public health or safety, or State, local, or Tribal governments or communities;

(2) Create a serious inconsistency or otherwise interfere with an action taken or planned by another agency;

(3) Materially alter the budgetary impact of entitlements, grants, user fees, or loan programs or the rights and obligations of recipients thereof; or

(4) Raise novel legal or policy issues arising out of legal mandates, the President's priorities, or the principles set forth in the Executive Order.

We have considered the impact of this rulemaking action under Executive Order 12866 and the Department of Transportation's regulatory policies and procedures. This rulemaking will not have an annual effect on the economy of $100 million or more, but is significant due to public interest in the issues. Therefore, this document was reviewed by the Office of Management and Budget under E.O. 12866, ''Regulatory Planning and Review.'' This document amends 49 CFR Part 571.206 by adding new performance requirements for hinged side doors and a new compliance test procedure for side sliding doors. These requirements must be met by vehicle manufacturers. The reason for Federal regulation is that consumers do not have any practical way of obtaining information relating to the strength and safety of sliding doors.

The cost of modifications for sliding doors with one latch is estimated to be $7.00 per door, for a total cost to the entire fleet of approximately $8.4 million (2003 dollars). For a further explanation of the estimated costs, see the Final Regulatory Evaluation provided in the docket for this rule.

C. Executive Order 13132

NHTSA has examined today's final rule pursuant to Executive Order 13132 (64 FR 43255, August 10, 1999) and concluded that no additional consultation with States, local governments or their representatives is mandated beyond the rulemaking process. The agency has concluded that the rule does not have federalism implications because the rule does not have ''substantial direct effects on the States, on the relationship between the national government and the States, or on the distribution of power and responsibilities among the various levels of government.''

Further, no consultation is needed to discuss the preemptive effect of today's rule. NHTSA rules can have preemptive effect in at least two ways. First, the National Traffic and Motor Vehicle Safety Act contains an express preemptive provision: ''When a motor vehicle safety standard is in effect under this chapter, a State or a political subdivision of a State may prescribe or continue in effect a standard applicable to the same aspect of performance of a motor vehicle or motor vehicle equipment only if the standard is identical to the standard prescribed under this chapter.'' 49 U.S.C. 30103(b)(1). It is this statutory command that preempts State law, not today's rulemaking, so consultation would be inappropriate.

In addition to the express preemption noted above, the Supreme Court has also recognized that State requirements imposed on motor vehicle manufacturers, including sanctions imposed by State tort law, can stand as an obstacle to the accomplishment and execution of a NHTSA safety standard. When such a conflict is discerned, the Supremacy Clause of the Constitution makes their State requirements unenforceable. *See Geier* v. *American Honda Motor Co.*, 529 U.S. 861 (2000). NHTSA has not outlined such potential State requirements in today's rulemaking, however, in part because such conflicts can arise in varied contexts, but it is conceivable that such a conflict may become clear through subsequent experience with today's standard and test regime. NHTSA may opine on such conflicts in the future, if warranted. *See id.* at 883–86.

D. Executive Order 13045

Executive Order 13045 (62 FR 19885, April 23, 1997) applies to any rulemaking that: (1) Is determined to be ''economically significant'' as defined under E.O. 12866, and (2) concerns an environmental, health or safety risk that NHTSA has reason to believe may have a disproportionate effect on children. If the regulatory action meets both criteria, we must evaluate the environmental health or safety effects of the planned rule on children, and explain why the

planned regulation is preferable to other potentially effective and reasonably feasible alternatives considered by us.

This rulemaking is not subject to the Executive Order because it is not economically significant as defined in E.O. 12866.

E. Executive Order 12988

With respect to the review of the promulgation of a new regulation, section 3(b) of Executive Order 12988, ''Civil Justice Reform'' (61 FR 4729, February 7, 1996) requires that Executive agencies make every reasonable effort to ensure that the regulation: (1) Clearly specifies the preemptive effect; (2) clearly specifies the effect on existing Federal law or regulation; (3) provides a clear legal standard for affected conduct, while promoting simplification and burden reduction; (4) clearly specifies the retroactive effect, if any; (5) adequately defines key terms; and (7) addresses other important issues affecting clarity and general draftsmanship under any guidelines issued by the Attorney General. This document is consistent with that requirement.

Pursuant to this Order, NHTSA notes as follows. The preemptive effect of this rule is discussed above. NHTSA notes further that there is no requirement that individuals submit a petition for reconsideration or pursue other administrative proceeding before they may file suit in court.

F. Regulatory Flexibility Act

Pursuant to the Regulatory Flexibility Act (5 U.S.C. 601 *et seq.*, as amended by the Small Business Regulatory Enforcement Fairness Act (SBREFA) of 1996) whenever an agency is required to publish a notice of rulemaking for any proposed or final rule, it must prepare and make available for public comment a regulatory flexibility analysis that describes the effect of the rule on small entities (*i.e.*, small businesses, small organizations, and small governmental jurisdictions). However, no regulatory flexibility analysis is required if the head of an agency certifies the rule would not have a significant economic impact on a substantial number of small entities. SBREFA amended the Regulatory Flexibility Act to require Federal agencies to provide a statement of the factual basis for certifying that a rule would not have a significant economic impact on a substantial number of small entities.

I certify that this final rule does not have a significant economic impact on a substantial number of small entities. The following is the agency's statement providing the factual basis for the certification (5 U.S.C. 605(b)).

The final rule directly affects motor vehicle manufacturers and business that design and manufacture door latch systems. According to the Small Business Administration's small business size standards (see 5 CFR 121.201), a motor vehicle manufacturer (NAICS code 336111, Automobile Manufacturing) must have 1000 or fewer employees to qualify as a small business. A business that designs and manufacturers door latch systems (NAICS code 336399, All Other Motor Vehicle Parts Manufacturing) must have 750 or fewer employees to qualify as a small business. There are four motor vehicle manufacturers in the United States which would qualify as a small business for the purpose of the Regulatory Flexibility Act. None of these manufacturers make vehicles with sliding doors. Vehicle manufacturers typically have their door latches designed and produced by wholly-owned subsidiaries, and would not be small businesses for the purpose of the Regulatory Flexibility Act. Accordingly, there are very few independent vehicle door latch manufacturers.

G. National Environmental Policy Act

We have analyzed this final rule for the purposes of the National Environmental Policy Act and determined that it does not have any significant impact on the quality of the human environment.

H. Paperwork Reduction Act

Under the Paperwork Reduction Act of 1995, a person is not required to respond to a collection of information by a Federal agency unless the collection displays a valid OMB control number. The final rule does not contain any new information collection requirements.

I. National Technology Transfer and Advancement Act

Section 12(d) of the National Technology Transfer and Advancement Act of 1995 (NTTAA), Public Law 104–113, section 12(d) (15 U.S.C. 272) directs us to use voluntary consensus standards in its regulatory activities unless doing so would be inconsistent with applicable law or otherwise impractical. Voluntary consensus standards are technical standards (*e.g.*, materials specifications, test methods, sampling procedures, and business practices) that are developed or adopted by voluntary consensus standards bodies, such as the Society of Automotive Engineers (SAE). The NTTAA directs us to provide Congress, through OMB, explanations when we decide not to use available and applicable voluntary consensus standards.

No voluntary consensus standards were used in developing the requirements because no voluntary standards exist that address the subject of this rulemaking. However, the SAE Recommended Practice J934, September 1998, *Vehicle Passenger Door Hinge Systems* and SAE Recommended Practice J839, September 1998, *Passenger Car Side Door Latch Systems* continue to be incorporated by reference in the regulatory text.

J. Unfunded Mandates Reform Act

Section 202 of the Unfunded Mandates Reform Act of 1995 (UMRA) requires Federal agencies to prepare a written assessment of the costs, benefits and other effects of proposed or final rules that include a Federal mandate likely to result in the expenditure by State, local or tribal governments, in the aggregate, or by the private sector, of more than $100 million in any one year (adjusted for inflation with base year of 1995). Before promulgating a NHTSA rule for which a written statement is needed, section 205 of the UMRA generally requires us to identify and consider a reasonable number of regulatory alternatives and adopt the least costly, most cost-effective or least burdensome alternative that achieves the objectives of the rule. The provisions of section 205 do not apply when they are inconsistent with applicable law. Moreover, section 205 allows us to adopt an alternative other than the least costly, most cost-effective or least burdensome alternative if we publish with the final rule an explanation why that alternative was not adopted.

The final rule will not impose any unfunded mandates under the Unfunded Mandates Reform Act of 1995. This rulemaking does not meet the definition of a Federal mandate because it would not result in costs of $100 million (adjusted annually for inflation with a base year of 1995 or 116 million in 2003 dollars) or more to either State, local, or tribal governments, in the aggregate, or to the private sector. Thus, this rulemaking is not subject to the requirements of sections 202 and 205 of the UMRA.

K. Regulation Identifier Number (RIN)

The Department of Transportation assigns a regulation identifier number (RIN) to each regulatory action listed in the Unified Agenda of Federal Regulations. The Regulatory Information Service Center publishes the Unified

Agenda in April and October of each year. You may use the RIN contained in the heading at the beginning of this document to find this action in the Unified Agenda.

L. Privacy Act

Anyone is able to search the electronic form of all comments received into any of our dockets by the name of the individual submitting the comment (or signing the comment, if submitted on behalf of an association, business, labor union, etc.). You may review DOT's complete Privacy Act Statement in the **Federal Register** published on April 11, 2000 (Volume 65, Number 70; Pages 19477–78) or you may visit *http://dms.dot.gov*.

List of Subjects in 49 CFR Part 571

Motor vehicle safety, Reporting and Recordkeeping requirements, and Tires.

In consideration of the foregoing, NHTSA amends 49 CFR 571.206 as follows:

PART 571—FEDERAL MOTOR VEHICLE SAFETY STANDARDS

1. The authority citation for Part 571 continues to read as follows:

Authority: 49 U.S.C. 322, 30111, 30115, 30117 and 30166; delegation of authority at 49 CFR 1.50.

2. Section 571.206 is amended by:

(a) Revising S1; S2; the definitions of ''auxiliary door latch,'' ''back door,'' ''fork-bolt,'' ''primary door latch,'' ''side front door,'' ''side rear door,'' and ''trunk lid'' in S3; S4 through S4.1.1.3; S4.1.2; S4.2 through S4.2.1.2; S4.2.2; S4.3; S5.1 through S5.1.1.2; S5.1.2; S5.2; S5.2.1; S5.2.2; Figure 1; and

(b) Adding ''auxiliary door latch system,'' ''body member,'' ''door closure warning system,'' ''door hinge system,'' ''door latch system,'' ''door member,'' ''door system,'' ''double door,'' ''folding door,'' ''fork-bolt opening direction,'' ''fully-latched position,'' ''hinge,'' ''hinge pin,'' ''latch,'' ''primary door latch system,'' ''secondary latched position,'' ''striker,'' to the definitions in S3; S4.1.1.4; S4.1.2.1 through S4.1.2.3; S4.2.1.3; S4.2.2.1; S4.2.2.2; S4.3.1; S4.3.2; S5; S5.1.1.3; S5.1.1.4; S5.1.2.1 through S5.1.2.4; S5.2.1.1 through S5.2.1.4; S5.2.2.1 through S5.2.2.4; S5.3; Figures 2 through 4; Table 1; Figures 5 through 9; and

(c) Removing ''cargo-type door'' and ''fork-bolt opening'' from the definitions in S3, S4.1.3, S4.1.3.1, S4.4 through S4.5, and S5.4 through S5.5, to read as follows:

§ 571.206 Standard 206; Door locks and door retention components.

S1. *Scope and Purpose.* This standard specifies requirements for vehicle door locks and door retention components, including latches, hinges, and other supporting means, to minimize the likelihood of occupants being ejected from a vehicle as a result of impact.

S2. *Application.* This standard applies to passenger cars, multipurpose passenger vehicles, and trucks, and buses with a gross vehicle weight rating (GVWR) of 4,536 kg or less.

S3. *Definitions.*

Auxiliary Door Latch is a latch equipped with a fully latched position, with or without a secondary latched position, and fitted to a door or door system equipped with a primary door latch system.

Auxiliary Door Latch System consists of door latches and strikers other than those associated with the primary door latch system.

Back Door is a door or door system on the back end of a motor vehicle through which passengers can enter or depart the vehicle or cargo can be loaded or unloaded. It does not include:

(a) A trunk lid; or

(b) A door or window composed entirely of glazing material and whose latches and/or hinge systems are attached directly to the glazing material.

Body Member is that portion of the hinge normally affixed to the body structure.

Door Closure Warning System is a system that will activate a visual signal when a door latch system is not in its fully latched position and the vehicle ignition is activated.

Door Hinge System is one or more hinges used to support a door.

Door Latch System consists of latches and strikers installed on a door system.

Door Member is that portion of the hinge normally affixed to the door structure and constituting the swinging member.

Door System is the door, latch, striker, hinges, sliding track combinations and other door retention components on a door and its surrounding doorframe. The door system of a double door includes both doors.

Double Door is a system of two doors where the front door or wing door opens first and connects to the rear door or bolted door, which opens second.

Folding Door is a movable barrier, which will close off an entranceway to a bus, multipurpose passenger vehicle or truck, consisting of two or more hinge panels that swing, slide, or rotate; does not have a striker and latch assembly.

Fork-bolt is the part of the latch that engages and retains the striker when in a latched position.

Fork-bolt Opening Direction is the direction opposite to that in which the striker enters the latch to engage the fork-bolt.

Fully Latched Position is the coupling condition of the latch that retains the door in a completely closed position.

Hinge is a device system used to position the door relative to the body structure and control the path of the door swing for passenger ingress and egress.

Hinge Pin is that portion of the hinge normally interconnecting the body and door members and establishing the swing axis.

Latch is a device employed to maintain the door in a closed position relative to the vehicle body with provisions for deliberate release (or operation).

Primary Door Latch is a latch equipped with both a fully latched position and a secondary latched position and is designated as a ''primary door latch'' by the manufacturer.

Primary Door Latch System consists of a primary door latch(s) and a striker(s).

Secondary Latched Position refers to the coupling condition of the latch that retains the door in a partially closed position.

Side Front Door is a door that, in a side view, has 50 percent or more of its opening area forward of the rearmost point on the driver's seat back, when the seat back is adjusted to its most vertical and rearward position.

Side Rear Door is a door that, in a side view, has 50 percent or more of its opening area to the rear of the rearmost point on the driver's seat back, when the driver's seat is adjusted to its most vertical and rearward position.

Striker is a device with which the latch engages to maintain the door in the fully latched or secondary latched position.

Trunk Lid is a movable body panel that provides access from outside the vehicle to a space wholly partitioned from the occupant compartment by a permanently attached partition or fixed or fold-down seat back.

S4. *Requirements.* The requirements apply to all side and back doors, that lead directly into a compartment that contains one or more seating accommodations and the associated door components, except for those on folding doors, roll-up doors, detachable doors, and on bus doors used only for emergency egress purposes and labeled accordingly.

S4.1 *Hinged Doors*

S4.1.1 *Primary and Auxiliary Door Latch Systems.* Each hinged door system shall be equipped with at least one

primary door latch system. By the time a vehicle is certified a manufacturer shall designate the door latch system(s) that is the ''primary door latch system(s).'' Upon certification, a manufacturer may not thereafter alter the designation of a primary door latch system. Each manufacturer shall, upon request from the National Highway Traffic Safety Administration, provide information regarding such designation.

S4.1.1.1 *Load Test One.*

(a) Each primary door latch system and auxiliary door latch system, when in the fully latched position, shall not separate when a load of 11,000 N is applied in the direction perpendicular to the face of the latch such that the latch and the striker anchorage are not compressed against each other, when tested in accordance with S5.1.1.1.

(b) When in the secondary latched position, the primary door latch system shall not separate when a load of 4,500 N is applied in the same direction specified in paragraph (a) of this section when tested in accordance with S5.1.1.1.

S4.1.1.2 *Load Test Two.*

(a) Each primary door latch system and auxiliary door latch system, when in the fully latched position, shall not separate when a load of 9,000 N is applied in the fork-bolt opening direction and parallel to the face of the latch, when tested in accordance with S5.1.1.2.

(b) When in the secondary latched position, the primary door latch system shall not separate when a load of 4,500 N is applied in the same direction specified in paragraph (a) of this section when tested in accordance with S5.1.1.2.

S4.1.1.3 *Load Test Three.* (Applicable only to back doors that open in a vertical direction). Each primary door latch system on back doors, when in the fully latched position, shall not separate when a load of 9,000 N is applied in a direction orthogonal to the directions specified in S4.1.1.1 and S4.1.1.2 when tested in accordance with S5.1.1.3.

S4.1.1.4 *Inertial Load.* Each primary door latch system and auxiliary door latch system shall meet either the dynamic requirements specified in paragraphs (a) and (b) of S4.1.1.4 or the calculation of inertial load resistance specified in paragraph (c) of S4.1.1.4.

(a) Each primary door latch and auxiliary door latch on each hinged door shall not disengage from the fully latched position when an inertia load is applied to the door latch system, including the latch and its activation device, in the directions parallel to the vehicle's longitudinal and transverse axes with the locking device disengaged, when tested as specified in S5.1.1.4(b).

(b) Each primary door latch and auxiliary door latch on each hinged back door shall also not disengage from the fully latched position when an inertia load is applied to the door latch system, including the latch and its activation device, in the direction parallel to the vehicle's vertical axis with the locking device disengaged, when tested as specified in S5.1.1.4(b).

(c) Each component or subassembly is calculated for its minimum inertial load resistance in a particular direction. The combined resistance to the unlatching operation must assure that the door latch system, when properly assembled in the vehicle door, will remain latched when subjected to an inertial load of 30 g in the vehicle directions specified in paragraph (a) of this section or paragraph (b) of this section, as applicable, when calculated in accordance with S5.1.1.4 (a).

S4.1.2 *Door Hinges.*

S4.1.2.1 When tested in accordance with S5.1.2, each door hinge system shall:

(a) Support the door,

(b) Not separate when a longitudinal load of 11,000 N is applied,

(c) Not separate when a transverse load of 9,000 N is applied, and

(d) For back doors,

(1) Not separate when a load of 11,000 N is applied perpendicular to the hinge face plate (longitudinal load test) such that the hinge plates are not compressed against each other (Load Test One).

(2) Not separate when a load of 9,000 N is applied perpendicular to the axis of the hinge pin and parallel to the hinge face plate (transverse load test) such that the hinge plates are not compressed against each other (Load Test Two).

(3) Not separate when a load of 9,000 N is applied in the direction of the axis of the hinge pin (Load Test Three—only for back doors that open in a vertical direction).

S4.1.2.2 If a single hinge within the hinge system is tested instead of the entire hinge system, the hinge must bear a load proportional to the total number of hinges in the hinge system. (For example, an individual hinge in a two-hinge system must be capable of withstanding 50% of the load requirements of the total system.)

S4.1.2.3 On side doors with rear mounted hinges that can be operated independently of other doors,

(a) The interior door handle shall be inoperative when the speed of the vehicle is greater than or equal to 4 km/h, and

(b) A door closure warning system shall be provided for those doors. The door closure warning system shall be located where it can be clearly seen by the driver.

S4.2 *Sliding Side Doors.*

S4.2.1 *Latch System.* Each sliding door system shall be equipped with either:

(a) At least one primary door latch system, or

(b) A door latch system with a fully latched position and a door closure warning system. The door closure warning system shall be located where it can be clearly seen by the driver. Upon certification a manufacturer may not thereafter alter the designation of a primary latch. Each manufacturer shall, upon request from the National Highway Traffic Safety Administration, provide information regarding such designation.

S4.2.1.1 *Load Test One.*

(a) At least one door latch system, when in the fully latched position, shall not separate when a load of 11,000 N is applied in the direction perpendicular to the face of the latch such that the latch and the striker anchorage are not compressed against each other, when tested in accordance with S5.2.1.1.

(b) In the case of a primary door latch system, when in the secondary latched position, the door latch system shall not separate when a load of 4,500 N is applied in the same direction specified in paragraph (a) of this section when tested in accordance with S5.2.1.1.

S4.2.1.2 *Load Test Two.*

(a) At least one door latch system, when in the fully latched position, shall not separate when a load of 9,000 N is applied in the fork-bolt opening direction and parallel to the face of the latch when tested in accordance with S5.2.1.2.

(b) In the case of a primary door latch system, when in the secondary latched position, the door latch system shall not separate when a load of 4,500 N is applied in the same direction specified in paragraph (a) of this section when tested in accordance with S5.2.1.2.

S4.2.1.3 *Inertial Load.* Each door latch system certified as meeting the requirements of S4.2.1.1 and S4.2.1.2 shall meet either the dynamic requirements specified in paragraph (a) of this section or the calculation of inertial load resistance specified in paragraph (b) of this section.

(a) The door latch system shall not disengage from the fully latched position when an inertial load is applied to the door latch system, including the latch and its activation mechanism, in the directions parallel to the vehicle's longitudinal and

transversal axes with the locking mechanism disengaged, and when tested in accordance with S5.1.1.4(b).

(b) The minimum inertial load resistance can be calculated for each component or subassembly. Their combined resistance to the unlatching operation must assure that the door latch system, when properly assembled in the vehicle door, will remain latched when subjected to an inertia load of 30 g in the vehicle directions specified in paragraph (a) of this section, when calculated in accordance with S5.1.1.4(a).

S4.2.2 *Door System.*

S4.2.2.1 The track and slide combination or other supporting means for each sliding door, while in the closed fully latched position, shall not separate from the door frame when a total force of 18,000 N along the vehicle transverse axis is applied to the door as specified in S5.2.2.

S4.2.2.2 When a sliding door system is tested in accordance with S5.2.2, the following conditions shall not occur:

(a) A separation which permits a sphere with a diameter of 100 mm to pass unobstructed between the exterior of the vehicle to the interior of the vehicle, while the required force is maintained as shown in Figure 1.

(b) Either force application device reaches a total displacement of 300 mm.

S4.3 *Door Locks.* Each door shall be equipped with at least one locking device which, when engaged, shall prevent operation of the exterior door handle or other exterior latch release control and which has an operating means and a lock release/engagement device located within the interior of the vehicle.

S4.3.1 *Rear side doors.* Each rear side door shall be equipped with at least one locking device which has a lock release/engagement mechanism located within the interior of the vehicle and readily accessible to the driver of the vehicle or an occupant seated adjacent to the door, and which, when engaged, prevents operation of the interior door handle or other interior latch release control and requires separate actions to unlock the door and operate the interior door handle or other interior latch release control.

S4.3.2 *Back doors.* Each back door equipped with an interior door handle or other interior latch release control, shall be equipped with at least one locking device that meets the requirements of S4.3.1.

S5 *Test Procedures.*

S5.1 *Hinged Doors.*

S5.1.1 *Primary and Auxiliary Door Latches.*

S5.1.1.1 *Load Test One Force Application.* The test procedures for S4.1.1.1 and S4.2.1.1 are as follows:

(a) *Fully latched position.*

(1) Attach the test fixture shown in Figure 2 to the mounting provisions of the latch and striker. Align the direction of engagement parallel to the linkage of the fixture. Mount the fixture with latch and striker in the fully latched position in the test machine so as to apply a load perpendicular to the face of the latch.

(2) Locate weights so as to apply a 900 N load tending to separate the latch and striker in the direction of the latch opening.

(3) Apply the test load, in the direction specified in S4.1.1.1 and Figure 5, at a rate not to exceed 5 mm/min until the required load has been achieved. Record the maximum load achieved.

(b) *Secondary Latched Position.*

(1) Attach the test fixture shown in Figure 2 to the mounting provisions of the latch and striker. Align the direction of engagement parallel to the linkage of the fixture. Mount the fixture with latch and striker in the secondary position in the test machine so as to apply a load perpendicular to the face of the latch.

(2) Locate weights so as to apply a 900 N load tending to separate the latch and striker in the direction of the latch opening.

(3) Apply the test load, in the direction specified in S4.1.1.1 and Figure 5, at a rate not to exceed 5 mm/min until the required load has been achieved. Record maximum load achieved.

(4) The test plate to which the door latch is mounted will have a striker cut-out configuration similar to the environment in which the door latch will be mounted on normal vehicle doors.

S5.1.1.2 *Load Test Two Force Application.* The test procedures for S4.1.1.2 and S4.2.1.2 are as follows:

(a) *Fully Latched Position.*

(1) Adapt the test fixture shown in Figure 3 to the mounting provisions of the latch and striker. Mount the fixture with latch and striker in the fully latched position in the test machine so to apply a load in the direction of latch opening.

(2) Apply the test load, in the direction specified in S4.1.1.2 and Figure 5, at a rate not to exceed 5 mm/min until the required load has been achieved. Record the maximum load achieved.

(b) *Secondary Latched Position.*

(1) Adapt the test fixture shown in Figure 3 to the mounting provisions of the latch and striker. Mount the fixture with latch and striker in the secondary latched position in the test machine so as to apply a load in the direction of latch opening.

(2) Apply the test load, in the direction specified in S4.1.1.2 and Figure 5, at a rate not to exceed 5 mm/min until the required load has been achieved. Record the maximum load achieved.

S5.1.1.3 *Load Test Three Force Application.* The test procedures for S4.1.1.3 are as follows:

(a) Adapt the test fixture shown in Figure 4 to the mounting provisions of the latch and striker. Mount the fixture with latch and striker in the fully latched position in the test machine so as to apply a load in the direction specified in S4.1.1.3 and Figure 5.

(b) Apply the test load, in the direction specified in S4.1.1.3 and Figure 5, at a rate not to exceed 5 mm/min until the required load has been achieved. Record the maximum load required.

S5.1.1.4 *Inertial Force Application.* The test procedures for S4.1.1.4 and S4.2.1.3 are as follows:

(a) *Calculation.* The calculation is performed in accordance with paragraph 6 of Society of Automotive Engineers Recommended Practice J839, *Passenger Car Side Door Latch Systems,* June 1991.

(b) *Dynamic Test.* The dynamic inertial force application is tested according to the setup specified in paragraph (1) or (2) of this section.

(1) *Test Setup and Directions for Full Vehicle Test.*

(i) Test Setup.

(A) Rigidly secure the full vehicle to an acceleration device that, when accelerated together, will assure that all points on the crash pulse curve are within the corridor defined in Table 1 and Figure 6.

(B) Install the equipment used to record door opening (doors may be tethered to avoid damaging the recording equipment).

(C) Close the door(s) to be tested and ensure that the door latch(es) is in the fully-latched position, that the door(s) is unlocked, and that all windows, if provided, on the door(s) are closed.

(ii) Test Directions. (See Figure 7)

(A) Longitudinal Setup 1. Orient the vehicle so that its longitudinal axis is aligned with the axis of the acceleration device, simulating a frontal impact.

(B) Longitudinal Setup 2. Orient the vehicle so that its longitudinal axis is aligned with the axis of the acceleration device, simulating a rear impact.

(C) Transverse Setup 1. Orient the vehicle so that its transverse axis is aligned with the axis of the acceleration device, simulating a driver-side impact.

(D) Transverse Setup 2. (Only for vehicles having different door arrangements on each side.) Orient the vehicle so that its transverse axis is aligned with the axis of the acceleration device, simulating a side impact in the direction opposite to that described in b(1)(ii)(C) of this paragraph.

(2) *Test Setup and Directions for Door Test.*

(i) Test Setup.

(A) Mount the door assemblies, consisting of at least the door latch(es), exterior door handle(s) with mechanical latch operation, interior door opening lever(s), and locking device(s), either separately or combined to a test fixture. Each door and striker is mounted to the test fixture to correspond to its orientation on the vehicle and to the directions specified in b(1)(ii) of this paragraph.

(B) Mount the test fixture to the acceleration device, and install the equipment used to record door opening.

(C) Ensure that the door latch is in the fully-latched position, that the door is tethered and unlocked, and that any windows are closed.

(ii) Test Directions. (See Figure 7)

(A) Longitudinal Setup 1. Orient the door subsystem(s) on the acceleration device in the direction of a frontal impact.

(B) Longitudinal Setup 2. Orient the door subsystem(s) on the acceleration device in the direction of a rear impact.

(C) Transverse Setup 1. Orient the door subsystem(s) on the acceleration device in the direction of a driver-side impact.

(D) Transverse Setup 2. Orient the door subsystem(s) on the acceleration device in the direction opposite to that described in (b)(2)(ii)(C) of this paragraph.

(E) Vertical Setup 1 (applicable only to back doors that open in a vertical direction). Orient the door subsystem(s) on the acceleration device so that its vertical axis (when mounted in the vehicle) is aligned with the axis of the acceleration device, simulating a rollover impact where the force is applied in the direction from the top to the bottom of the door (when mounted in a vehicle).

(F) Vertical Setup 2 (applicable only to back doors that open in a vertical direction). Orient the door subsystem(s) on the acceleration device so that its vertical axis (when mounted in the vehicle) is aligned with the axis of the acceleration device, simulating a rollover impact where the force is applied in the direction opposite to that described in (b)(2)(ii)(E) of this paragraph.

(3) *Test Operation.*

(i) The acceleration device platform shall be instrumented with an accelerometer and data processing system that conforms to the requirements specified in Society of Automotive Engineers (SAE) Recommended Practice J211 December 2003, ''Instrumentation for Impact Test—Part 1—Electronic Instrumentation'', Channel Class 60. The accelerometer sensitive axis is parallel to the direction of test platform travel.

(ii) Maintaining a minimum acceleration level of 30 g for a period of at least 30 ms, while keeping the recorded acceleration within the pulse corridor defined in Table 1 and Figure 6, accelerate the acceleration device in the following directions:

(A) For Full Vehicle Tests, in the directions specified in S5.1.1.4(b)(1)(ii)(A) through S5.1.1.4(b)(1)(ii)(D).

(B) For Door Tests, in the directions specified in S5.1.1.4(b)(2)(ii)(A) through S5.1.1.4(b)(2)(ii)(F).

(iii) Check recording device for door opening and/or closure during the test.

(iv) If at any point in time, the pulse exceeds 36 g and the test specifications are met, the test shall be considered valid.

S5.1.2 *Door Hinges.* The test procedures for S4.1.2 are as follows:

S5.1.2.1 Multiple Hinge Evaluation;

S5.1.2.1.1 *Longitudinal Load Test.*

(a) Attach the test fixture illustrated in Figure 8 to the mounting provisions of the hinge system. Hinge attitude is configured to simulate vehicle position (door fully closed) relative to the hinge centerline. For test purposes, the distance between the extreme end of one hinge in the system to the extreme end of another hinge in the system is to be set at 406 mm ± 4 mm. The load is to be applied equidistant between the linear center of the engaged portions of the hinge pins and through the centerline of the hinge pin in the longitudinal vehicle direction (see Figure 8).

(b) Apply the test load at a rate not to exceed 5 mm/min until the required load has been achieved. Record maximum load achieved.

S5.1.2.1.2 *Transverse Load Test*

(a) Attach the test fixture shown in Figure 8 to the mounting provisions of the hinge system. Hinge attitude is configured to simulate vehicle position (door fully closed) relative to the hinge centerline. For test purposes, the distance between the extreme end of one hinge in the system to the extreme opposite end of another hinge in the system is to be set at 406 mm ± 4 mm. The load is to be applied equidistant between the linear center of the engaged portions of the hinge pins and through the centerline of the hinge pin in the transverse vehicle direction (see Figure 8).

(b) Apply the test load at a rate not to exceed 5 mm/min until the required load has been achieved. Record maximum load achieved.

S5.1.2.2 *Back Door Hinge Load Test*

(a) Load Test One

(1) Attach the test fixture illustrated in Figure 8 to the mounting provisions of the hinge system. Hinge attitude is configured to simulate vehicle position (door fully closed) relative to the hinge centerline. For test purposes, the distance between the extreme end of one hinge system in the system to the extreme opposite end of another hinge system is to be set at 406 ± 4 mm. The load is to be applied equidistant between the linear center of the engaged portions of the hinge pins and through the centerline of the hinge pin, and as specified in S4.1.2.1(d)(1). (See Figure 9).

(2) Apply the test load at a rate not to exceed 5 mm/min until the required load has been achieved. Failure consists of a separation of either hinge. Record the maximum load achieved.

(b) Load Test Two

(1) Attach the test fixture illustrated in Figure 8 to the mounting provisions of the hinge system. Hinge attitude is configured to simulate vehicle position (door fully closed) relative to the hinge centerline. For test purposes, the distance between the extreme end of one hinge system in the system to the extreme opposite end of another hinge system is to be set at 406 ± 4 mm. The load is to be applied equidistant between the linear center of the engaged portions of the hinge pins and through the centerline of the hinge pin, and as specified in S4.1.2.1(d)(2). (See Figure 9).

(2) Apply the test load at a rate not to exceed 5 mm/min until the required load has been achieved. Failure consists of a separation of either hinge. Record the maximum load achieved.

(c) Load Test Three

(1) Attach the test fixture illustrated in Figure 8 to the mounting provisions of the hinge system. Hinge attitude is configured to simulate vehicle position (door fully closed) relative to the hinge centerline. For test purposes, the distance between the extreme end of one hinge system in the system to the extreme opposite end of another hinge system is to be set at 406 ± 4 mm. The load is to be applied through the centerline of the hinge pin, and as specified in S4.1.2.1(d)(3). (See Figure 9).

(2) Apply the test load at a rate not to exceed 5 mm/min until the required load has been achieved. Failure consists of a separation of either hinge. Record the maximum load achieved.

S5.1.2.3 *Single Hinge Evaluation.* Individual hinges of a hinge system are tested in accordance with the procedures below:

(a) *Longitudinal Load.* Attach the test fixture illustrated in Figure 8 to the mounting provisions of the hinge. Hinge attitude is configured to simulate the vehicle position (door fully closed) relative to the hinge centerline. For test purposes, the load is to be applied equidistant between the linear center of the engaged portions of the hinge pin and through the centerline of the hinge pin in the longitudinal vehicle direction. Apply the test load at a rate not to exceed 5 mm/min until the required load has been achieved. Failure consists of a separation of either hinge. Record maximum load achieved.

(b) *Transverse Load.* Attach the test fixture illustrated in Figure 8 to the mounting provisions of the hinge. Hinge attitude is configured to simulate the vehicle position (door fully closed) relative to the hinge centerline. For test purposes, the load is to be applied equidistant between the linear center of the engaged portions of the hinge pin and through the centerline of the hinge pin in the transverse vehicle direction. Apply the test load at a rate not to exceed 5 mm/min until the required load has been achieved. Failure consists of a separation of either hinge. Record maximum load achieved.

(c) *Back Door Hinge Load Tests.*

(1) Load Test One. Attach the test fixture illustrated in Figure 8 to the mounting provisions of the hinge. Hinge attitude is configured to simulate the vehicle position (door fully closed) relative to the hinge centerline. For test purposes, the load is to be applied equidistant between the linear center of the engaged portions of the hinge pin and through the centerline of the hinge pin, and as specified in S4.1.2.1(d)(1). (See Figure 9). Apply the test load at a rate not to exceed 5 mm/min until the required load has been achieved. Failure consists of a separation of either hinge. Record maximum load achieved.

(2) Load Test Two. Attach the test fixture illustrated in Figure 8 to the mounting provisions of the hinge. Hinge attitude is configured to simulate the vehicle position (door fully closed) relative to the hinge centerline. For test purposes, the load is to be applied equidistant between the linear center of the engaged portions of the hinge pin and through the centerline of the hinge pin, and as specified in S4.1.2.1(d)(2). (See Figure 9). Apply the test load at a rate not to exceed 5 mm/min until the required load has been achieved. Failure consists of a separation of either hinge. Record maximum load achieved.

(3) Load Test Three. Attach the test fixture illustrated in Figure 8 to the mounting provisions of the hinge. Hinge attitude is configured to simulate the vehicle position (door fully closed) relative to the hinge centerline. For test purposes, the load is to be applied through the centerline of the hinge pin, and as specified in S4.1.2.1(d)(3). (See Figure 9). Apply the test load at a rate not to exceed 5 mm/min until the required load has been achieved. Failure consists of a separation of either hinge. Record maximum load achieved.

S5.1.2.4 For piano-type hinges, the hinge spacing requirements are not applicable and arrangement of the test fixture is altered so that the test forces are applied to the complete hinge.

S5.2 *Sliding Side Doors.*

S5.2.1 *Door Latches.*

S5.2.1.1 *Load Test One Force Application.* The requirements of S4.2.1.1 are tested in accordance with the procedures specified in S5.1.1.1.

S5.2.1.2 *Load Test Two Force Application.* The requirements of S4.2.1.2 are tested in accordance with the procedures specified in S5.1.1.2.

S5.2.1.3 [Reserved.]

S5.2.1.4 [Reserved.]

S5.2.2 *Door System.* The test procedures for S4.2.2 are as follows:

S5.2.2.1 Tests are conducted using a full vehicle with the sliding door and its retention components.

S5.2.2.2 The test is conducted using two force application devices capable of applying the outward transverse forces specified in S5.2.2.4. The test setup is shown in Figure 10. The force application system shall include the following:

(a) Two force application plates, (b) Two force application devices capable of applying the outward transverse load requirements for a minimum displacement of 300 mm.

(c) Two load cells of sufficient capacity to measure the applied loads specified in S5.2.2.4.

(d) Two linear displacement measurement devices required for measuring force application device displacement during the test.

(e) Equipment to measure for a 100 mm separation as specified in S4.2.2.2(a), while respecting all relevant safety and health requirements.

S5.2.2.3 *Test Setup.*

(a) Remove all interior trim and decorative components from the sliding door assembly.

(b) Remove seats and any interior components that may interfere with the mounting and operation of the test equipment and all pillar trim and any non-structural components that overlap the door and cause improper placement of the force application plates.

(c) Each force application device and associated support structure is rigidly fixed on a horizontal surface on the vehicle floor, while applying the loads.

(d) Determine the forward and aft edge of the sliding door, or its adjoining vehicle structure, that contains a latch/striker.

(e) Close the sliding door, ensuring that all door retention components are fully engaged.

(f) For any tested door edge that contains one latch/striker, the following set-up procedures are used:

(1)(i) The force application plate is 150 mm in length, 50 mm in width, and at least 15 mm in thickness. The plate edges are rounded to a radius of 6 mm ± 1 mm.

(ii) The plates are rigidly fixed perpendicular to the force application devices to maintain the displacement of the force application plate in the transverse direction. The plates allow for longitudinal rotation with respect to the vehicle's centerline axis. The plates do not allow for rotation in the vehicle's transverse direction.

(2) Place the force application device and force application plate against the door so that the applied force is perpendicular to the vertical longitudinal plane that passes through the vehicle's longitudinal centerline, and vertically centered on the door-mounted portion of the latch/striker.

(3) The force application plate is positioned such that the long edge of the plate is as close to the edge of the interior edge of the door as possible, but not such that the forward edge of plate is more than 12.5 mm from the interior edge.

(g) For any tested door edge that contains more than one latch/striker, the following setup procedures are used:

(1)(i) The force application plate is 300 mm in length, 50 mm in width, and at least 15 mm in thickness. The plate edges are rounded to a radius of 6 mm ±1 mm.

(ii) The plates are rigidly fixed perpendicular to the force application devices to maintain the displacement of the force application plate in the transverse direction. The plates allow for longitudinal rotation with respect to the vehicle's centerline axis. The plates do not allow for rotation in the vehicle's transverse direction.

(2) Place the force application device and force application plate against the door so that the applied force is perpendicular to the vertical

longitudinal plane that passes through the vehicle's longitudinal centerline, and vertically centered on a point midway between the outermost edges of the latch/striker assemblies.

(3) The force application plate is positioned such that the long edge of the plate is as close to the edge of the interior edge of the door as possible, but not such that the forward edge of plate is more than 12.5 mm from the interior edge.

(h) For any tested door edge that does not contain at least one latch/striker, the following set-up procedures are used:

(1)(i) The force application plate is 300 mm in length, 50 mm in width, and at least 15 mm in thickness. The plate edges are rounded to a radius of 6 mm ± 1 mm.

(ii) The plates are rigidly fixed perpendicular to the force application devices to maintain the displacement of the force application plate in the transverse direction. The plates allow for longitudinal rotation with respect to the vehicle's centerline axis. The plates do not allow for rotation in the vehicle's transverse direction.

(2) Place the force application device and force application plate against the door so that the applied force is perpendicular to the vertical longitudinal plane that passes through the vehicle's longitudinal centerline, and vertically centered on a point midway along the length of the door edge ensuring that the loading device avoids contact with the window glazing.

(3) The force application plate is positioned such that the long edge of the plate is as close to the edge of the interior edge of the door as possible, but not such that the forward edge of plate is more than 12.5 mm from the interior edge.

(i) The door is unlocked. No extra fixtures or components may be welded or affixed to the sliding door or any of its components.

(j) Place the load application structure so that the force application plates are in contact with the interior of the sliding door.

(k) Apply a preload of 500 N to each actuator and ''zero'' the displacement measuring device.

S5.2.2.4 *Test Procedure.*

(a) Move each force application device at any rate up to 2000 N per minute until a force of 9,000 N is achieved on each force application device or until either force application device reaches a total displacement of 300 mm.

(b) If one of the force application devices reaches the target force of 9,000 N prior to the other, maintain the 9,000 N force with that force application device until the second force application device reaches the 9,000 N force.

(c) Once both force application devices have achieved 9,000 N each hold the resulting load.

(d) Maintain each force application device load as specified in paragraph (c) and within 30 seconds measure the separation between the exterior edge of the doorframe and the interior of the door along the perimeter of the door.

S5.3 [Reserved].

BILLING CODE 4910–59–P

FIGURE 1. EVALUATION OF SLIDING DOOR GAP SEPARATION

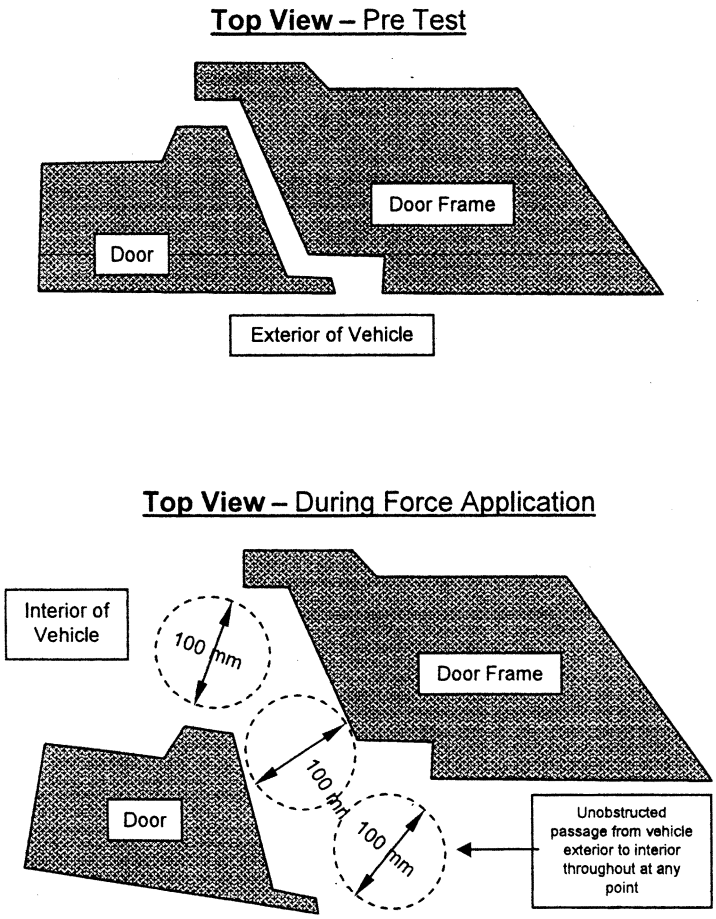

FIGURE 2 - DOOR LATCH – TENSILE TESTING FIXTURE FOR LOAD TEST 1

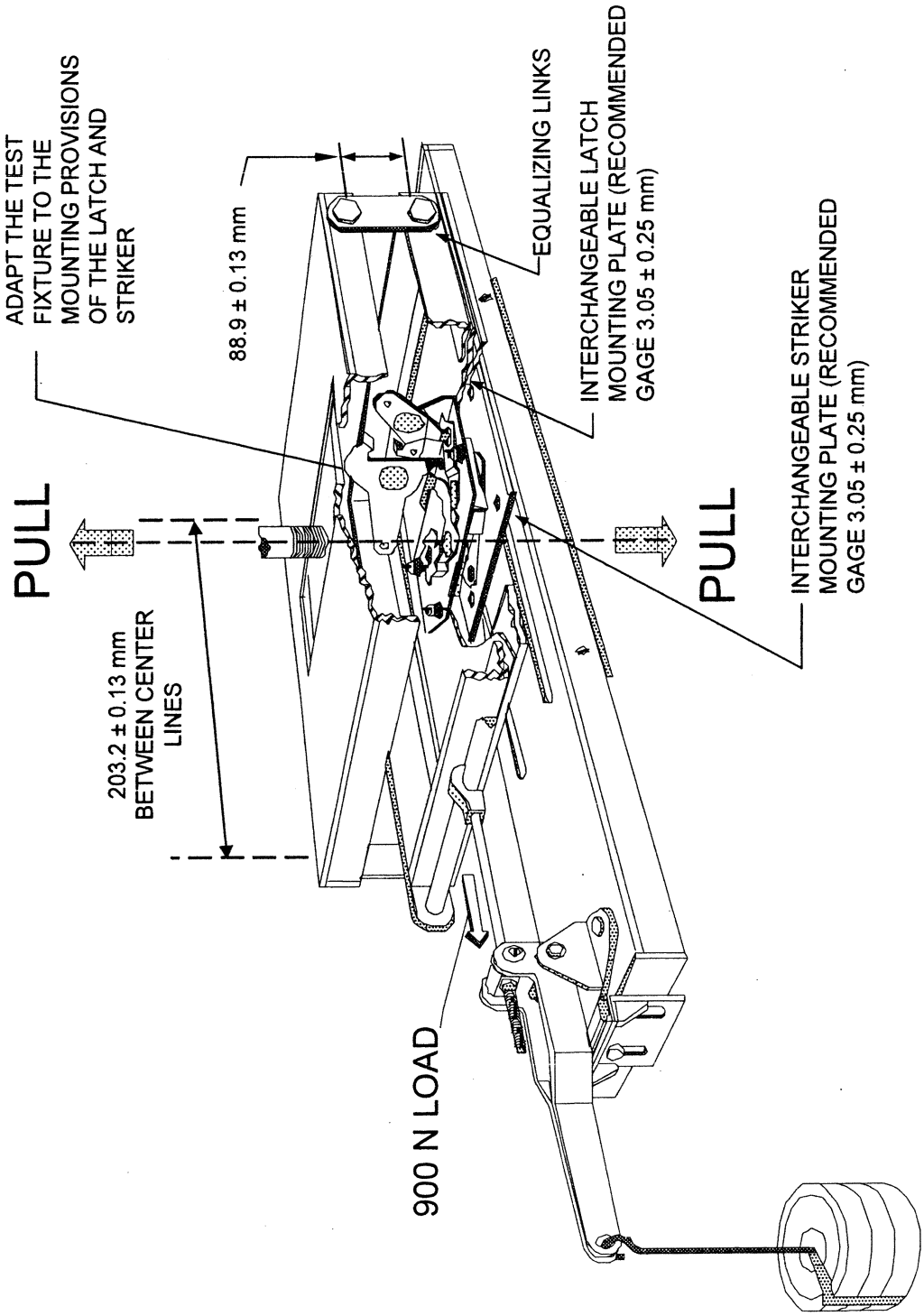

FIGURE 3 – DOOR LATCH – TENSILE TESTING FIXTURE FOR LOAD TEST 2

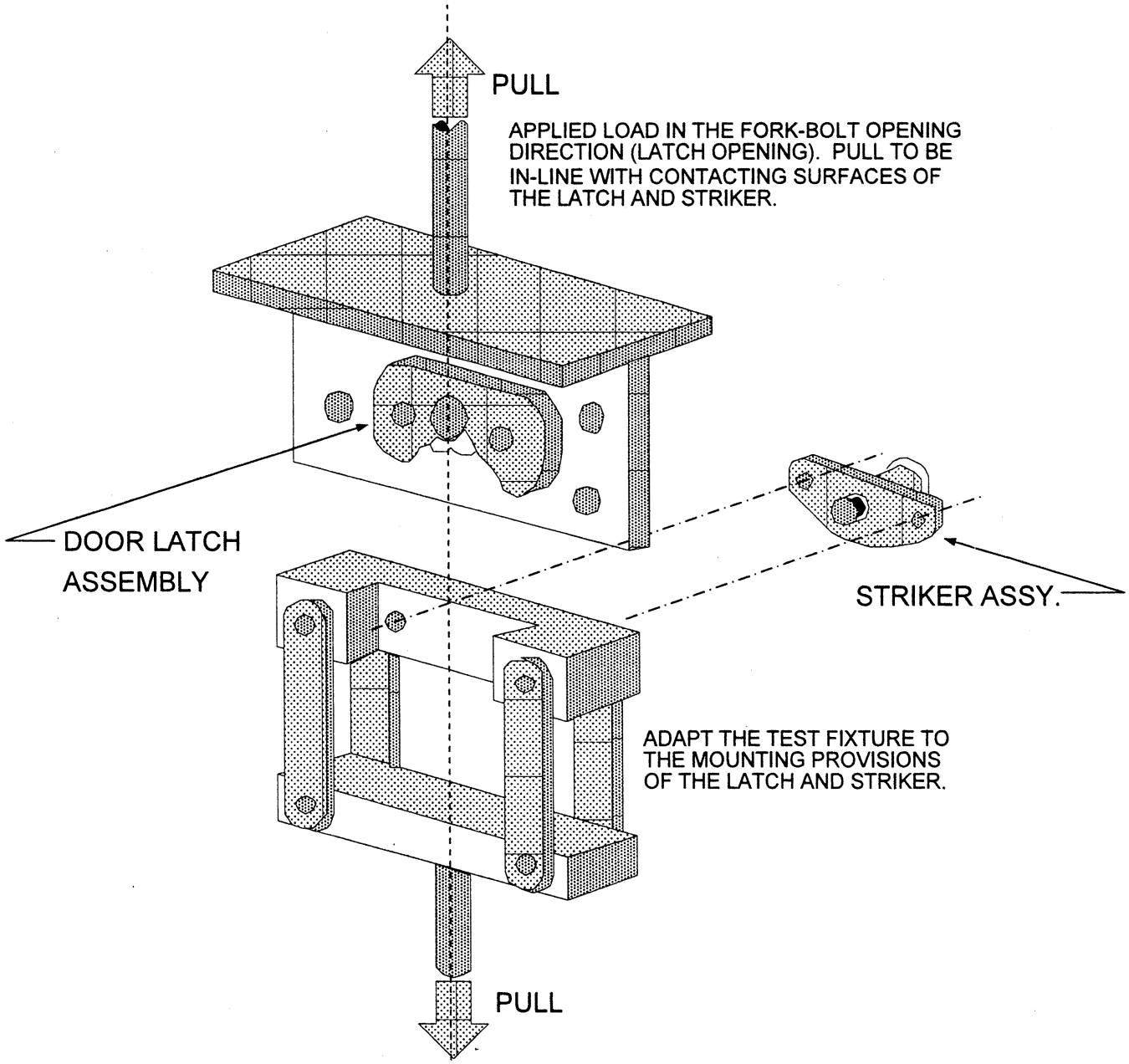

FIGURE 4 – DOOR LATCH – TENSILE TESTING FIXTURE FOR LOAD TEST 3 (BACK DOORS ONLY)

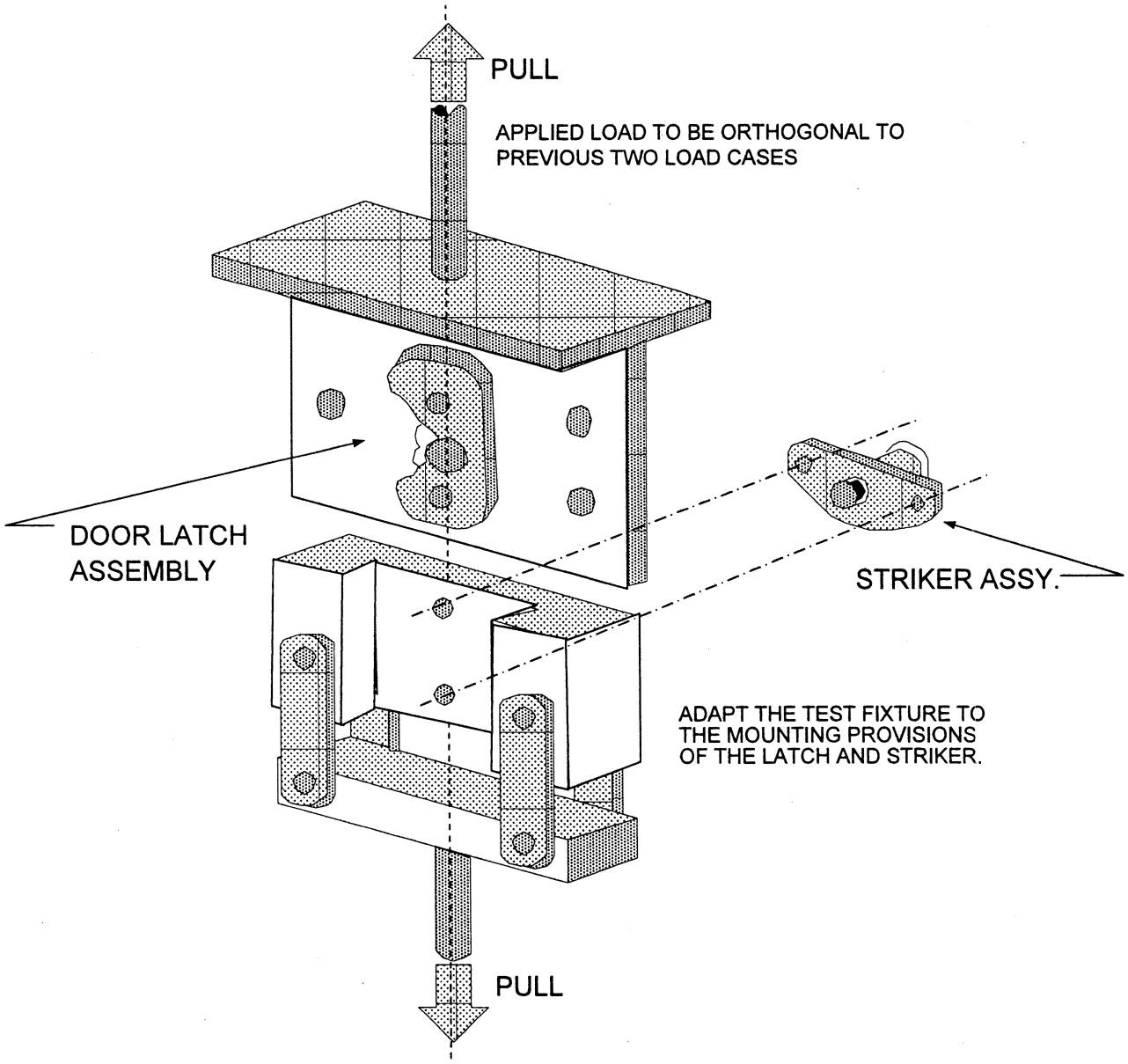

Upper Bound			Lower Bound		
Point	Time (ms)	Acceleration (g)	Point	Time (ms)	Acceleration (g)
A	0	6	E	5	0
B	20	36	F	25	30
C	60	36	G	55	30
D	100	0	H	70	0

ACCELERATION PULSE CORRIDOR TABLE 1

FIGURE 5 – DOOR LATCH STATIC LOAD TEST DIRECTIONS

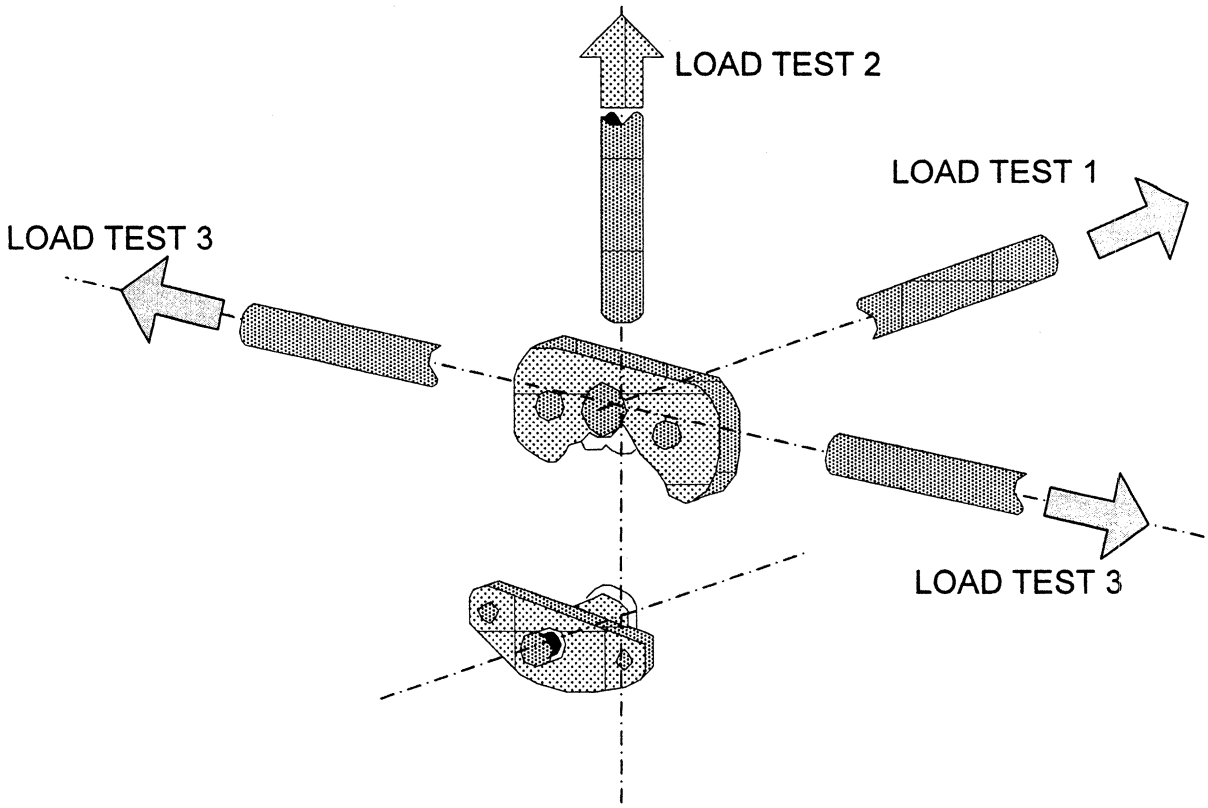

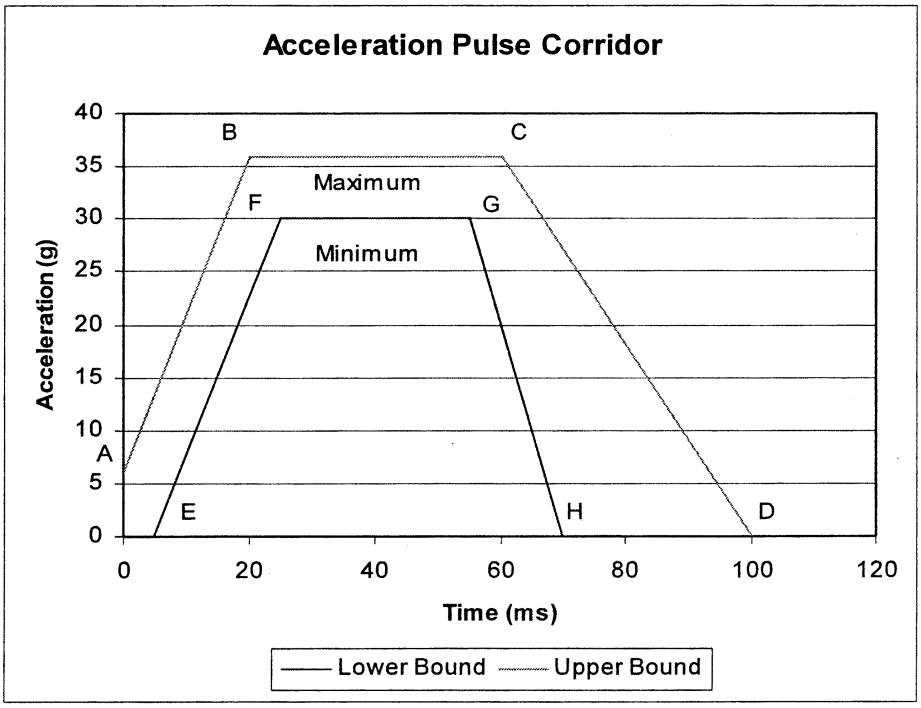

FIGURE 6 – ACCELERATION PULSE

FIGURE 7 - VEHICLE COORDINATE REFERENCE SYSTEM FOR INERTIAL TESTING

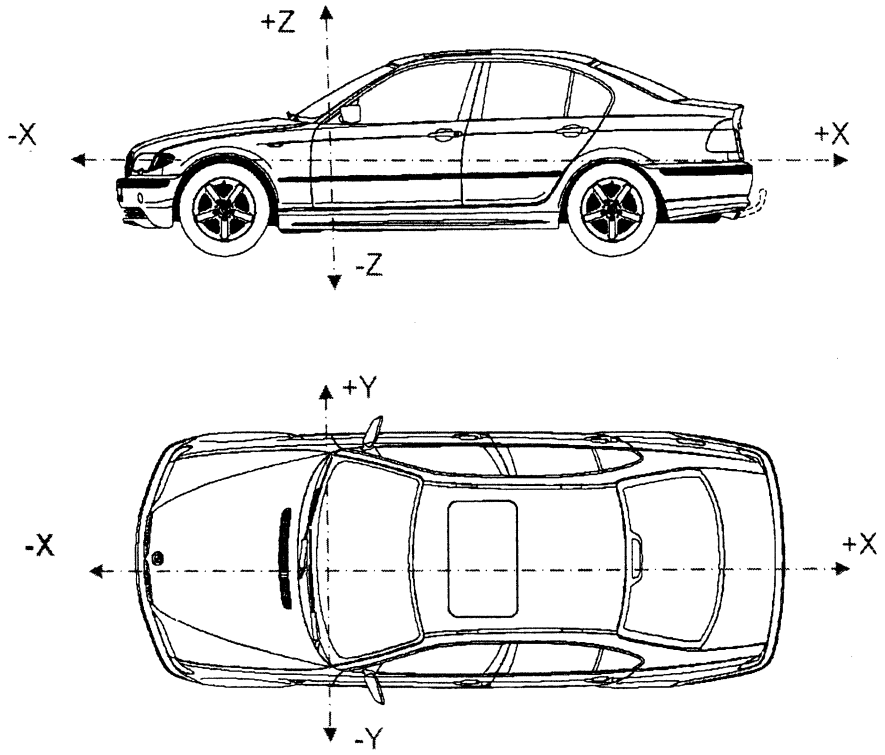

X = longitudinal direction
Y = transverse direction
Z = vertical direction

FIGURE 8 – HINGE STATIC TEST FIXTURES

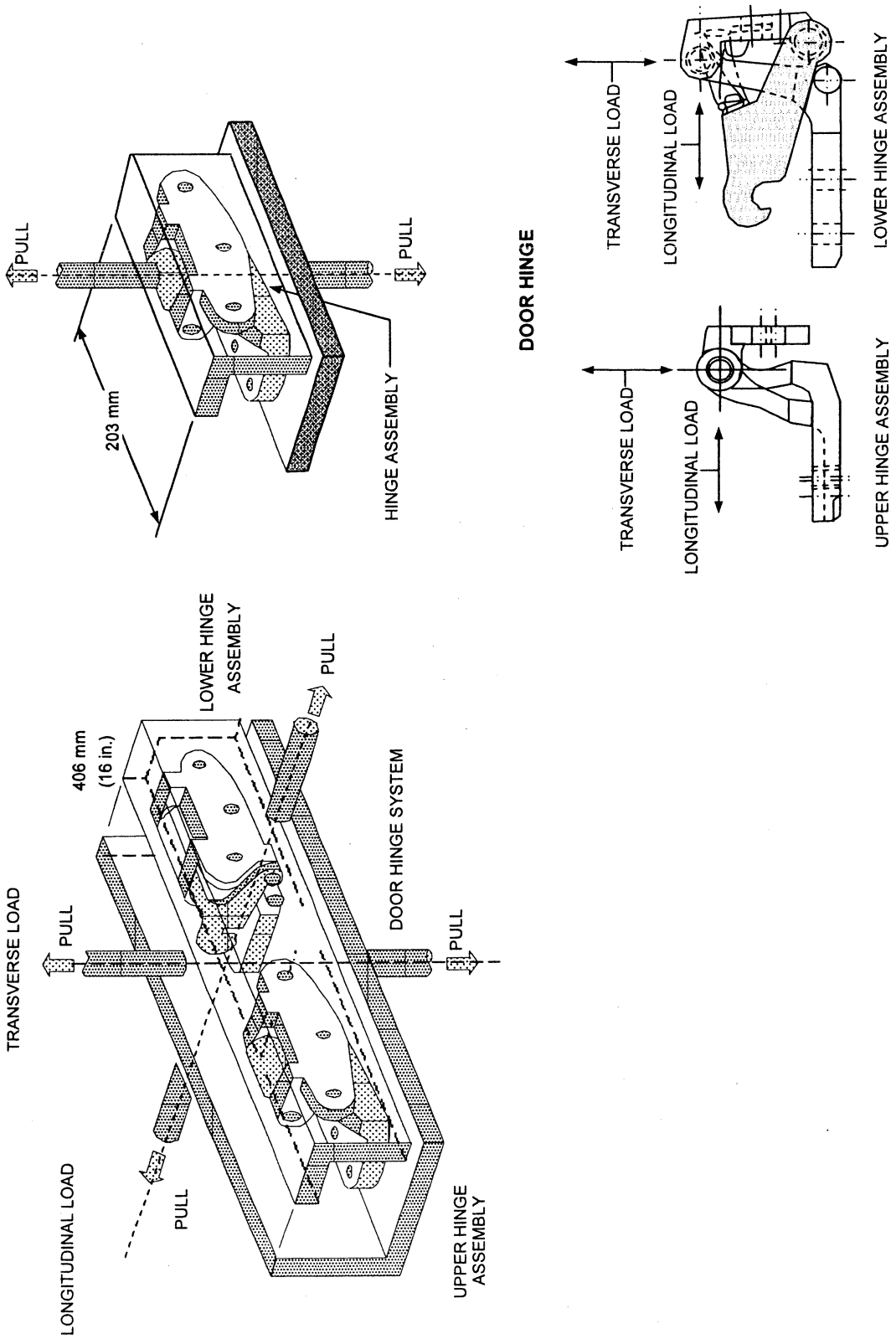

FIGURE 9 – HINGE STATIC TEST LOAD DIRECTIONS FOR BACK DOORS

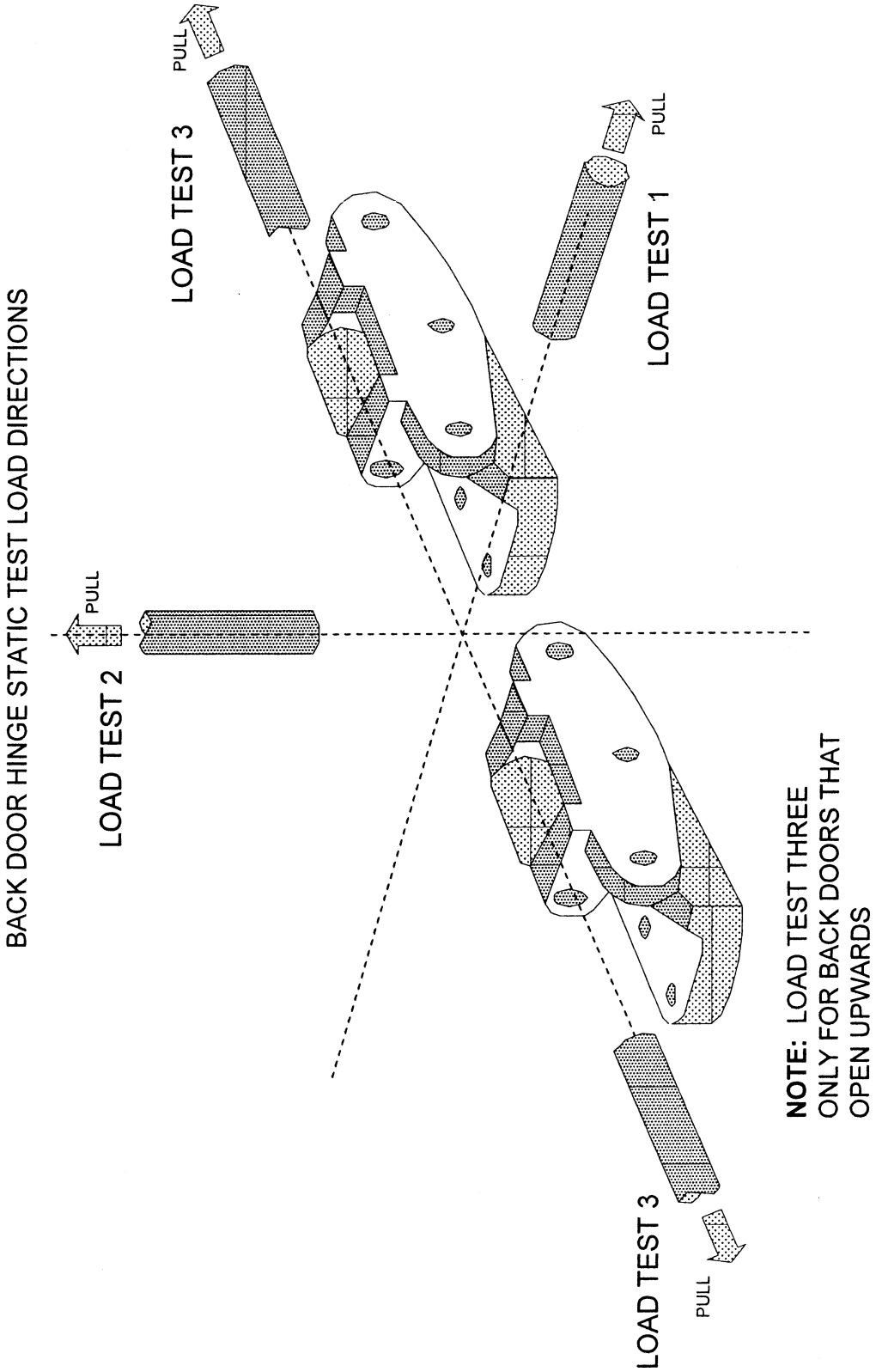

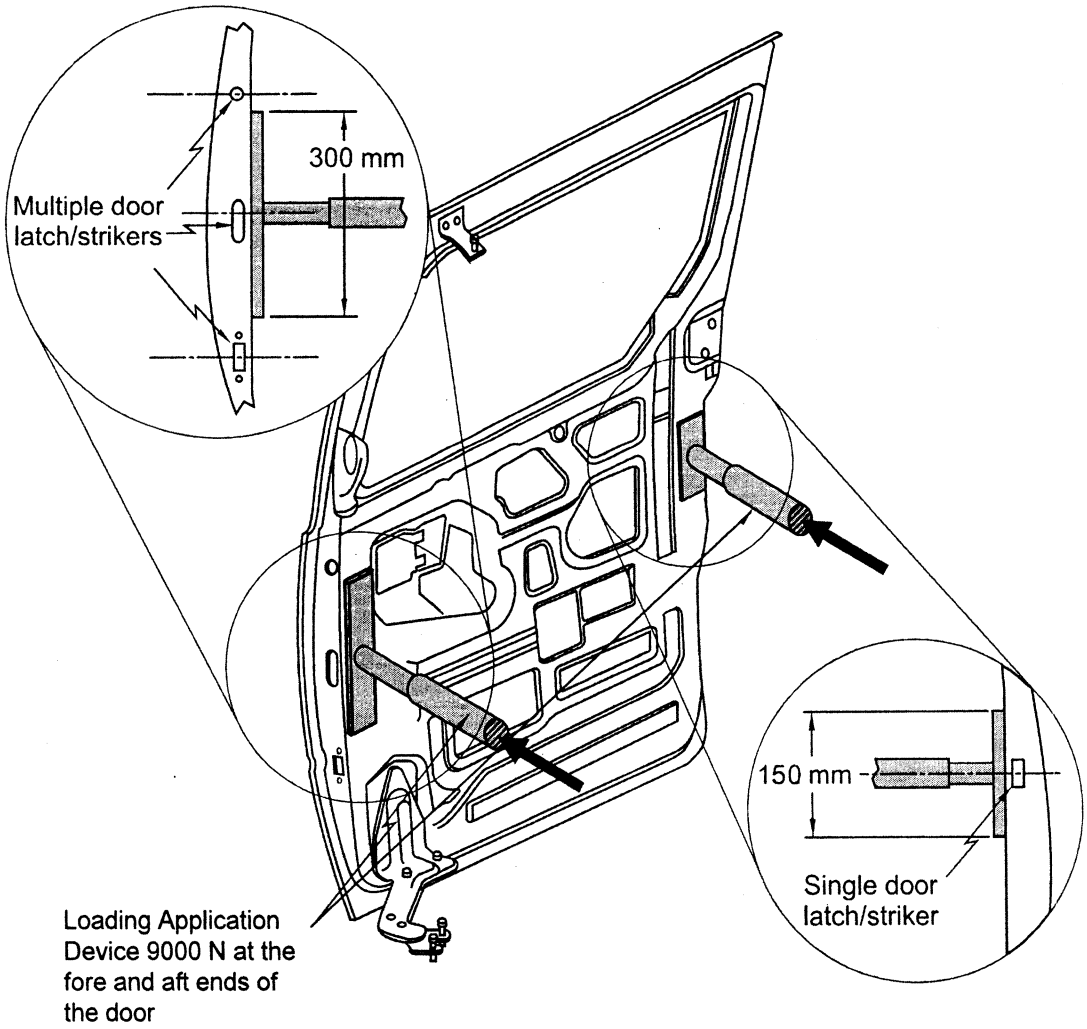

FIGURE 10 – Sliding Door Full Vehicle Test Procedure
(Note: Sliding door is shown separated from the vehicle)

Issued on: January 30, 2007.

Nicole R. Nason,

Administrator.

[FR Doc. 07–517 Filed 2–5–07; 8:45 am]

BILLING CODE 4910–59–C