PART 73—RADIO BROADCAST SERVICES

1. The authority citation for part 73 continues to read as follows:

Authority: 47 U.S.C. 154, 303, 334, 336.

§ 73.202 [Amended]

2. Section 73.202(b), the Table of FM Allotments under Florida, is amended by removing Channel *259A and by adding Channel *261A at Live Oak.

Federal Communications Commission.

John A. Karousos,

Assistant Chief, Audio Division, Media Bureau.

[FR Doc. E7–14879 Filed 7–31–07; 8:45 am]

BILLING CODE 6712–01–P

FEDERAL COMMUNICATIONS COMMISSION

47 CFR Part 73

[DA 07–3151; MB Docket No. 07–130; RM–11372]

Radio Broadcasting Services; Silverton, CO

AGENCY: Federal Communications Commission.

ACTION: Proposed rule.

SUMMARY: This document requests comments on a petition for rulemaking filed by Laramie Mountain Broadcasting, LLC, requesting the allotment of Channel 281A at Silverton, Colorado, as the community's second local aural transmission service. Channel 281A can be allotted at Silverton, Colorado, without a site restriction at coordinates 37–07–43 NL and 107–39–50 WL.

DATES: Comments must be filed on or before September 3, 2007, and reply comments on or before September 18, 2007.

ADDRESSES: Federal Communications Commission, 445 Twelfth Street, SW., Washington, DC 20554. In addition to filing comments with the FCC, interested parties should serve the petitioner as follows: A. Wray Fitch, Esquire, Gammon & Grange, PC, 8280 Greensboro Drive, 7th Floor, McLean, VA 22102–3807.

FOR FURTHER INFORMATION CONTACT: Victoria McCauley, Media Bureau, (202) 418–2180.

SUPPLEMENTARY INFORMATION: This is a synopsis of the Commission's Notice of Proposed Rule Making, MB Docket No. 07–130, adopted July 11, 2007 and released July 13, 2007. The full text of this Commission decision is available for inspection and copying during normal business hours in the FCC's Reference Information Center at Portals II, CY–A257, 445 Twelfth Street, SW., Washington, DC 20554. This document may also be purchased from the Commission's copy contractor, Best Copy and Printing, Inc., Portals II, 445 12th Street, SW., Room CY–B402, Washington, DC 20554, telephone 1–800–378–3160 or *http://www.BCPIWEB.com*.

This document does not contain proposed information collection requirements subject to the Paperwork Reduction Act of 1995, Public Law 104–13. In addition, therefore, it does not contain any proposed information collection burden ''for small business concerns with fewer than 25 employees,'' pursuant to the Small Business Paperwork Relief Act of 2002, Public Law 107–198, *see* 44 U.S.C. 3506(c)(4). Provisions of the Regulatory Flexibility Act of 1980 do not apply to this proceeding.

Members of the public should note that from the time a Notice of Proposed Rule Making is issued until the matter is no longer subject to Commission consideration or court review, all *ex parte* contacts are prohibited in Commission proceedings, such as this one, which involve channel allotments. See 47 CFR 1.1204(b) for rules governing permissible *ex parte* contacts.

For information regarding proper filing procedures for comments, see 47 CFR 1.415 and 1.420.

List of Subjects in 47 CFR Part 73

Radio, Radio broadcasting.

For the reasons discussed in the preamble, the Federal Communications Commission proposes to amend 47 CFR Part 73 as follows:

PART 73—RADIO BROADCAST SERVICES

1. The authority citation for Part 73 continues to read as follows:

Authority: 47 U.S.C. 154, 303, 334, 336.

§ 73.202 [Amended]

2. Section 73.202(b), the Table of FM Allotments under Colorado is amended by adding Silverton, Channel 281A.

Federal Communications Commission.

John A. Karousos,

Assistant Chief, Audio Division, Media Bureau.

[FR Doc. E7–14878 Filed 7–31–07; 8:45 am]

BILLING CODE 6712–01–P

DEPARTMENT OF TRANSPORTATION

Federal Railroad Administration

49 CFR Part 238

[Docket No. FRA–2006–25268, Notice No. 1]

RIN 2130–AB80

Passenger Equipment Safety Standards; Front-End Strength of Cab Cars and Multiple-Unit Locomotives

AGENCY: Federal Railroad Administration (FRA), Department of Transportation (DOT).

ACTION: Notice of proposed rulemaking (NPRM).

SUMMARY: FRA is proposing to further the safety of passenger train occupants by amending existing regulations to enhance structural strength requirements for the front end of cab cars and multiple-unit locomotives. These enhancements would include the addition of deformation and energy absorption requirements specified in revised American Public Transportation Association (APTA) standards for front-end collision posts and corner posts for this equipment. FRA is also proposing to make miscellaneous clarifying amendments to current regulations for the structural strength of passenger equipment.

DATES: (1) Written comments must be received by October 1, 2007. Comments received after that date will be considered to the extent possible without incurring additional expense or delay.

(2) FRA anticipates being able to resolve this rulemaking without a public, oral hearing. However, if FRA receives a specific request for a public, oral hearing prior to August 31, 2007, one will be scheduled, and FRA will publish a supplemental notice in the **Federal Register** to inform interested parties of the date, time, and location of any such hearing.

ADDRESSES: *Comments:* Comments related to Docket No. FRA–2006–25268, Notice No. 1, may be submitted by any of the following methods:

- *Web Site: http://dms.dot.gov.* Follow the instructions for submitting comments on the DOT electronic docket site.
- *Fax:* 202–493–2251.
- *Mail:* Docket Management Facility, U.S. Department of Transportation, 1200 New Jersey Avenue, SE., West Building Ground Floor, Room W12–140, Washington, DC 20590.
- *Hand Delivery:* Docket Management Facility, U.S. Department of

Transportation, 1200 New Jersey Avenue, SE., West Building Ground Floor, Room W12–140, Washington, DC, between 9 a.m. and 5 p.m. Monday through Friday, except Federal holidays.

• *Federal eRulemaking Portal:* Go to *http://www.regulations.gov.* Follow the online instructions for submitting comments.

Instructions: All submissions must include the agency name and docket number or Regulatory Identification Number (RIN) for this rulemaking. Note that all comments received will be posted without change to *http://dms.dot.gov* including any personal information. Please see the Privacy Act heading in the **SUPPLEMENTARY INFORMATION** section of this document for Privacy Act information related to any submitted comments or materials.

Docket: For access to the docket to read background documents or comments received, go to *http://dms.dot.gov* at any time or to the Docket Management Facility, U.S. Department of Transportation, 1200 New Jersey Avenue, SE., West Building Ground Floor, Room W12–140, Washington, DC, between 9 a.m. and 5 p.m. Monday through Friday, except Federal Holidays.

FOR FURTHER INFORMATION CONTACT: Gary G. Fairbanks, Specialist, Motive Power and Equipment Division, Office of Safety, RRS–14, Mail Stop 25, Federal Railroad Administration, 1120 Vermont Avenue, NW., Washington, DC 20590 (telephone 202–493–6282); Eloy E. Martinez, Program Manager, Equipment and Operating Practices Division, Office of Railroad Development, RDV–32, Federal Railroad Administration, 55 Broadway, Cambridge, MA 02142 (telephone 617–494–2243); or Daniel L. Alpert, Trial Attorney, Office of Chief Counsel, Mail Stop 10, Federal Railroad Administration, 1120 Vermont Avenue, NW., Washington, DC 20590 (telephone 202–493–6026).

SUPPLEMENTARY INFORMATION:

Table of Contents for Supplementary Information

I. Statutory Background
II. Proceedings to Date
A. Proceedings To Carry Out the Initial Rulemaking Mandate
B. Key Issues Identified for Future Rulemaking
C. Railroad Safety Advisory Committee (RSAC) Overview
D. Establishment of the Passenger Safety Working Group
E. Establishment of the Crashworthiness/Glazing Task Force
F. Development of the NPRM
III. Technical Background
A. Predominant Types of Passenger Rail Service
B. Front-End Frame Structures of Cab Cars and MU Locomotives
C. Accident History
D. FRA and Industry Standards for Front-End Frame Structures of Cab Cars and MU Locomotives
E. Testing of Front-End Frame Structures of Cab Cars and MU Locomotives
1. Designs Evaluated by FRA
2. FRA Dynamic Impact Testing
3. Industry Quasi-Static Testing
4. Comparative Analyses
F. Approaches for Specifying Large Deformation Requirements
G. Crash Energy Management and the Design of Front-End Frame Structures of Cab Cars and MU Locomotives
IV. Section-by-Section Analysis
V. Regulatory Impact and Notices
A. Executive Order 12866 and DOT Regulatory Policies and Procedures
B. Regulatory Flexibility Act and Executive Order 13272
C. Paperwork Reduction Act
D. Federalism Implications
E. Environmental Impact
F. Unfunded Mandates Act of 1995
G. Energy Impact
H. Trade Impact
I. Privacy Act

I. Statutory Background

In September of 1994, the Secretary of Transportation convened a meeting of representatives from all sectors of the rail industry with the goal of enhancing rail safety. As one of the initiatives arising from this Rail Safety Summit, the Secretary announced that DOT would begin developing safety standards for rail passenger equipment over a five-year period. In November of 1994, Congress adopted the Secretary's schedule for implementing rail passenger equipment safety regulations and included it in the Federal Railroad Safety Authorization Act of 1994 (the Act), Pub. L. No. 103–440, 108 Stat. 4619, 4623–4624 (November 2, 1994). Congress also authorized the Secretary to consult with various organizations involved in passenger train operations for purposes of prescribing and amending these regulations, as well as issuing orders pursuant to them. Section 215 of the Act is codified at 49 U.S.C. 20133.

II. Proceedings to Date

A. Proceedings to Carry Out the Initial Rulemaking Mandate

The Secretary of Transportation delegated these rulemaking responsibilities to the Federal Railroad Administrator, *see* 49 CFR 1.49(m), and FRA formed the Passenger Equipment Safety Standards Working Group to provide FRA advice in developing the regulations. On June 17, 1996, FRA published an advance notice of proposed rulemaking (ANPRM) concerning the establishment of comprehensive safety standards for railroad passenger equipment. *See* 61 FR 30672. The ANPRM provided background information on the need for such standards, offered preliminary ideas on approaching passenger safety issues, and presented questions on various passenger safety topics. Following consideration of comments received on the ANPRM and advice from FRA's Passenger Equipment Safety Standards Working Group, FRA published an NPRM on September 23, 1997, to establish comprehensive safety standards for railroad passenger equipment. *See* 62 FR 49728. In addition to requesting written comment on the NPRM, FRA also solicited oral comment at a public hearing held on November 21, 1997. FRA considered the comments received on the NPRM and prepared a final rule establishing comprehensive safety standards for passenger equipment, which was published on May 12, 1999. *See* 64 FR 25540.

After publication of the final rule, interested parties filed petitions seeking FRA's reconsideration of certain requirements contained in the rule. These petitions generally related to the following subject areas: structural design; fire safety; training; inspection, testing, and maintenance; and movement of defective equipment. To address the petitions, FRA grouped issues together and published in the **Federal Register** three sets of amendments to the final rule. Each set of amendments summarized the petition requests at issue, explained what action, if any, FRA decided to take in response to the issues raised, and described FRA's justifications for its decisions and any action taken. Specifically, on July 3, 2000, FRA issued a response to the petitions for reconsideration relating to the inspection, testing, and maintenance of passenger equipment, the movement of defective passenger equipment, and other miscellaneous provisions related to mechanical issues contained in the final rule. *See* 65 FR 41284. On April 23, 2002, FRA responded to all remaining issues raised in the petitions for reconsideration, with the exception of those relating to fire safety. *See* 67 FR 19970. Finally, on June 25, 2002, FRA completed its response to the petitions for reconsideration by publishing a response to the petitions for reconsideration concerning the fire safety portion of the rule. *See* 67 FR 42892. (For more detailed information on the petitions for reconsideration and FRA's response to them, please see these three rulemaking documents.) The

product of this rulemaking was codified primarily at 49 CFR part 238 (part 238) and also at 49 CFR parts 216, 223, 229, 231, and 232.

Meanwhile, another rulemaking on passenger train emergency preparedness produced a final rule codified at 49 CFR part 239. *See* 63 FR 24629; May 4, 1998. The rule addresses passenger train emergencies of various kinds, including security situations, and requires the preparation, adoption, and implementation of emergency preparedness plans by railroads connected with the operation of passenger trains. The rule requires railroads that operate intercity or commuter passenger train service or that host the operation of such service to adopt and comply with written emergency preparedness plans. The emergency preparedness plans must address subjects such as communication, employee training and qualification, joint operations, tunnel safety, liaison with emergency responders, on-board emergency equipment, and passenger safety information. The rule requires each affected railroad to instruct its employees on the applicable provisions of its plan, and the plan adopted by each railroad is subject to formal review and approval by FRA. The rule also requires each railroad operating passenger train service to conduct emergency simulations to determine its capability to execute the emergency preparedness plan under the variety of emergency scenarios that could reasonably be expected to occur. In addition, the rule contains requirements for the identification and usage of emergency window exits, rescue access windows, and door exits.

B. Key Issues Identified for Future Rulemaking

Although FRA had completed these rulemakings, FRA had identified various issues for possible future rulemaking, including those to be addressed following the completion of additional research, the gathering of additional operating experience, or the development of industry standards, or all three. One such issue concerned enhancing the requirements for corner posts on cab cars and MU locomotives. *See* 64 FR 25607; May 12, 1999. Current FRA requirements for corner posts are based on conventional industry practice at the time, which had not proven adequate in then-recent side swipe collisions with cab cars leading. *Id.* FRA explained that the current requirements were being adopted as an interim measure to prevent the introduction of equipment not meeting the requirements, that FRA was assisting APTA in preparing an industry standard for corner post arrangements on cab cars and MU locomotives, and that adoption of a suitable Federal standard would be an immediate priority. *Id.* In broader terms, this issue concerned the behavior of cab car and MU locomotive end frames when overloaded, as during an impact with maintenance-of-way equipment or with a highway vehicle at a highway-rail grade crossing, and thus concerned collision post strength as well. FRA and interested industry members also began identifying other issues related to the passenger equipment safety standards and the passenger train emergency preparedness regulations. FRA decided to address these issues with the assistance of FRA's Railroad Safety Advisory Committee.

C. Railroad Safety Advisory Committee (RSAC) Overview

In March 1996 FRA established RSAC, which provides a forum for developing consensus recommendations to FRA's Administrator on rulemakings and other safety program issues. The Committee includes representation from all of the agency's major customer groups, including railroads, labor organizations, suppliers and manufacturers, and other interested parties. A list of current member groups follows:

- American Association of Private Railroad Car Owners (AARPCO);
- American Association of State Highway and Transportation Officials (AASHTO);
- American Chemistry Council;
- American Petroleum Institute;
- APTA;
- American Short Line and Regional Railroad Association (ASLRRA);
- American Train Dispatchers Association;
- Association of American Railroads (AAR);
- Association of Railway Museums;
- Association of State Rail Safety Managers (ASRSM);
- Brotherhood of Locomotive Engineers and Trainmen (BLET);
- Brotherhood of Maintenance of Way Employees Division;
- Brotherhood of Railroad Signalmen (BRS);
- Chlorine Institute;
- Federal Transit Administration (FTA)*;
- Fertilizer Institute;
- High Speed Ground Transportation Association;
- Institute of Makers of Explosives;
- International Association of Machinists and Aerospace Workers;
- International Brotherhood of Electrical Workers (IBEW);
- Labor Council for Latin American Advancement*;
- League of Railway Industry Women*;
- National Association of Railroad Passengers (NARP);
- National Association of Railway Business Women*;
- National Conference of Firemen & Oilers;
- National Railroad Construction and Maintenance Association;
- National Railroad Passenger Corporation (Amtrak);
- National Transportation Safety Board (NTSB)*;
- Railway Supply Institute (RSI);
- Safe Travel America (STA);
- Secretaria de Comunicaciones y Transporte*;
- Sheet Metal Workers International Association (SMWIA);
- Tourist Railway Association, Inc.;
- Transport Canada*;
- Transport Workers Union of America (TWU);
- Transportation Communications International Union/BRC (TCIU/BRC);
- Transportation Security Administration*; and
- United Transportation Union (UTU).

*Indicates associate, non-voting membership.

When appropriate, FRA assigns a task to RSAC, and after consideration and debate, RSAC may accept or reject the task. If the task is accepted, RSAC establishes a working group that possesses the appropriate expertise and representation of interests to develop recommendations to FRA for action on the task. These recommendations are developed by consensus. A working group may establish one or more task forces to develop facts and options on a particular aspect of a given task. The task force then provides that information to the working group for consideration. If a working group comes to unanimous consensus on recommendations for action, the package is presented to the full RSAC for a vote. If the proposal is accepted by a simple majority of RSAC, the proposal is formally recommended to FRA. FRA then determines what action to take on the recommendation. Because FRA staff play an active role at the working group level in discussing the issues and options and in drafting the language of the consensus proposal, FRA is often favorably inclined toward the RSAC recommendation. However, FRA is in no way bound to follow the recommendation, and the agency exercises its independent judgment on whether the recommended rule achieves the agency's regulatory goal, is soundly

supported, and is in accordance with policy and legal requirements. Often, FRA varies in some respects from the RSAC recommendation in developing the actual regulatory proposal or final rule. Any such variations would be noted and explained in the rulemaking document issued by FRA. If the working group or RSAC is unable to reach consensus on recommendations for action, FRA moves ahead to resolve the issue through traditional rulemaking proceedings.

D. Establishment of the Passenger Safety Working Group

On May 20, 2003, FRA presented, and RSAC accepted, the task of reviewing existing passenger equipment safety needs and programs and recommending consideration of specific actions that could be useful in advancing the safety of rail passenger service. The RSAC established the Passenger Safety Working Group (Working Group) to handle this task and develop recommendations for the full RSAC to consider. Members of the Working Group, in addition to FRA, include the following:

- AAR, including members from BNSF Railway Company, CSX Transportation, Inc., and Union Pacific Railroad Company;
- AAPRCO;
- AASHTO;
- Amtrak;
- APTA, including members from Bombardier, Inc., LDK Engineering, Herzog Transit Services, Inc., Long Island Rail Road (LIRR), Metro-North Commuter Railroad Company (Metro-North), Northeast Illinois Regional Commuter Railroad Corporation (Metra), Southern California Regional Rail Authority (Metrolink), and Southeastern Pennsylvania Transportation Authority (SEPTA);
- BLET;
- BRS;
- FTA;
- HSGTA;
- IBEW;
- NARP;
- RSI;
- SMWIA;
- STA;
- TCIU/BRC;
- TWU; and
- UTU.

Staff from DOT's John A. Volpe National Transportation Systems Center (Volpe Center) attended all of the meetings and contributed to the technical discussions. In addition, staff from the NTSB met with the Working Group when possible. The Working Group has held nine meetings on the following dates and locations:

- September 9–10, 2003, in Washington, DC;
- November 6, 2003, in Philadelphia, PA;
- May 11, 2004, in Schaumburg, IL;
- October 26–27, 2004, in Linthicum/Baltimore, MD;
- March 9–10, 2005, in Ft. Lauderdale, FL;
- September 7, 2005, in Chicago, IL;
- March 21–22, 2006, in Ft. Lauderdale, FL;
- September 12–13, 2006, in Orlando, FL; and
- April 17–18, 2007, in Orlando, FL.

At the meetings in Chicago and Ft. Lauderdale in 2005, FRA met with representatives of Tri-County Commuter Rail and Metra, respectively, and toured their passenger equipment. The visits were open to all members of the Working Group, and FRA believes they have added to the collective understanding of the Group in identifying and addressing passenger equipment safety issues.

E. Establishment of the Crashworthiness/Glazing Task Force

Due to the variety of issues involved, at its November 2003 meeting the Working Group established four task forces—smaller groups to develop recommendations on specific issues within each group's particular area of expertise. Members of the task forces include various representatives from the respective organizations that were part of the larger Working Group. One of these task forces was assigned the job of identifying and developing issues and recommendations specifically related to the inspection, testing, and operation of passenger equipment as well as concerns related to the attachment of safety appliances on passenger equipment. An NPRM on these topics was published on December 8, 2005, *see* 70 FR 73069, and a final rule was published on October 19, 2006, *see* 71 FR 61835. Another of these task forces was established to identify issues and develop recommendations related to emergency systems, procedures, and equipment, and helped to develop an NPRM on these topics that was published on August 24, 2006, *see* 71 FR 50276. Another task force, the Crashworthiness/Glazing Task Force (Task Force), was assigned the job of developing recommendations related to glazing integrity, structural crashworthiness, and the protection of occupants during accidents and incidents. Specifically, this Task Force was charged with developing recommendations for glazing qualification testing and for cab car/MU locomotive end frame optimization. Although being developed by the same Task Force, the glazing and cab car/MU locomotive end frame recommendations are being handled separately, and glazing is not a subject of this NPRM. The Task Force was also given the responsibility of addressing a number of other issues related to glazing, structural crashworthiness, and occupant protection and recommending any research necessary to facilitate their resolution. Members of the Task Force, in addition to FRA, include the following:

- AAR;
- Amtrak;
- APTA, including members from Bombardier, Inc., General Electric Transportation Systems, General Motors—Electro-Motive Division, Kawasaki Rail Car, Inc., LDK Engineering, LIRR, LTK Engineering Services, Maryland Transit Administration, Massachusetts Bay Commuter Rail Corporation (MBCR), Metrolink, Metro-North, Northern Indiana Commuter Transportation District (NICTD), Rotem Company, Saint Gobian Sully NA, San Diego Northern Commuter Railroad (Coaster), SEPTA, and STV, Inc.;
- BLET;
- California Department of Transportation (Caltrans);
- NARP;
- RSI; and
- UTU.

While not voting members of the Task Force, representatives from the NTSB attended certain of the meetings and contributed to the discussions of the Task Force. In addition, staff from the Volpe Center attended all of the meetings and contributed to the technical discussions.

The Task Force held six meetings on the following dates and locations:

- March 17–18, 2004, in Cambridge, MA;
- May 13, 2004, in Schaumberg, IL;
- November 9, 2004, in Boston, MA;
- February 2–3, 2005, in Cambridge, MA;
- April 21–22, 2005, in Cambridge, MA; and
- August 11, 2005, in Cambridge, MA.

F. Development of the NPRM

This NPRM was developed to address concerns raised and issues discussed about cab car and MU locomotive front-end frame structures during the Task Force meetings and pertinent Working Group meetings. Minutes of each of these meetings have been made part of the docket in this proceeding and are available for public inspection. With the exception discussed below, the Working

Group reached consensus on the principal regulatory provisions contained in this NPRM at its meeting in September 2005. After the September 2005 meeting, the Working Group presented its recommendations to the full RSAC for concurrence at its meeting in October 2005. All of the members of the full RSAC in attendance at its October 2005 meeting accepted the regulatory recommendations submitted by the Working Group. Thus, the Working Group's recommendations became the full RSAC's recommendations to FRA in this matter. After reviewing the full RSAC's recommendations, FRA agreed that the recommendations provided a good basis for a proposed rule, but that test standards and performance criteria more suitable to cab cars and MU locomotives without a flat forward end or with energy absorbing structures used as part of a crash energy management design (CEM), or both, should be specified. As discussed below, the NPRM provides an option for the dynamic testing of cab cars and MU locomotives as a means of demonstrating compliance with the rule. However, FRA makes clear that this proposal was not the result of an RSAC recommendation. Otherwise, FRA has adopted the RSAC's recommendations with generally minor changes for purposes of clarity and formatting in the **Federal Register**.

Overall, this NPRM is the product of FRA's review, consideration, and acceptance of the recommendations of the Task Force, Working Group, and full RSAC. In the preamble discussion of this proposal, FRA refers to comments, views, suggestions, or recommendations made by members of the Task Force, Working Group, and full RSAC, as they are identified or contained in the minutes of their meetings. FRA does so to show the origin of certain issues and the nature of discussions concerning those issues at the Task Force, Working Group, and full RSAC level. FRA believes this serves to illuminate factors it has weighed in making its regulatory decisions, as well as the logic behind those decisions. The reader should keep in mind, of course, that only the full RSAC makes recommendations to FRA. However, as noted above, FRA is in no way bound to follow the recommendations, and the agency exercises its independent judgment on whether the recommendations achieve the agency's regulatory goal(s), are soundly supported, and are in accordance with policy and legal requirements.

III. Technical Background

Transporting passengers by rail is very safe. Since 1978, more than 11.2 billion passengers have traveled by rail, based on reports filed monthly with FRA. The number of rail passengers has steadily increased over the years, and since the year 2000 has averaged more than 500 million per year. On a passenger-mile basis, with an average of about 15.5 billion passenger-miles per year, rail travel is about as safe as scheduled airline service and intercity bus transportation, and it is far safer than private motor vehicle travel. Passenger rail accidents—while always to be avoided—have a very high passenger survival rate.

Yet, as in any form of transportation, there are risks inherent in passenger rail travel. Although no passengers died in train collision or derailments in 2006, 12 passengers did in 2005. For this reason, FRA continually works to improve the safety of passenger rail operations. FRA's efforts include sponsoring the research and development of safety technology, providing technical support for industry specifications and standards, and engaging in cooperative rulemaking efforts with key industry stakeholders. FRA has focused in particular on enhancing the crashworthiness of passenger trains.

In a passenger train collision or derailment, the principal crashworthiness risks that occupants face are the loss of safe space inside the train from crushing of the train structure and, as the train decelerates, the risk of secondary impacts with interior surfaces. Therefore, the principal goals of the crashworthiness research sponsored by FRA are twofold: First, to preserve a safe space in which occupants can ride out the collision or derailment, and, then, to minimize the physical forces to which occupants are subjected when impacting surfaces inside a passenger car as the train decelerates. Though not a part of this NPRM, other crashworthiness research focuses on related issues such as fuel tank safety, for equipment with a fuel tank, and the associated risk of fire if the fuel tank is breached during the collision or derailment.

The results of ongoing research on cab car and MU locomotive front-end frame structures help demonstrate both the effectiveness and the practicality of the structural enhancements proposed in this NPRM to make this equipment more crashworthy. This research is discussed below, along with other technical information providing the background for FRA's proposal.

A. Predominant Types of Passenger Rail Service

FRA's focus on cab car and MU locomotive crashworthiness should be considered in the context of the predominant types of passenger rail service in North America. The first involves operation of passenger trains with conventional locomotives in the lead, typically pulling consists of passenger coaches and other cars such as baggage cars, dining cars, and sleeping cars. Such trains are common on long-distance, intercity rail routes operated by Amtrak. On a daily basis, however, most passenger rail service is provided by commuter railroads, which typically operate one or both of the two most predominant types of service: Push-pull service and MU locomotive service.

Push-pull service is passenger train service typically operated in one direction of travel with a conventional locomotive in the rear of the train pushing the consist (the ''push mode'') and with a cab car in the lead position of the train; and, in the opposite direction of travel, the service is operated with the conventional locomotive in the lead position of the train pulling the consist (the ''pull mode'') and with the cab car in the rear of the train. (A cab car is both a passenger car, in that it has seats for passengers, and a locomotive, in that it has a control cab from which the engineer can operate the train.) Control cables run the length of the train, as do electrical lines providing power for heat, lights, and other purposes.

MU locomotive service is passenger rail service involving trains consisting of self-propelled electric or diesel MU locomotives. MU locomotives typically operate semi-permanently coupled together as a pair or triplet with a control cab at each end of the consist. During peak commuting hours, multiple pairs or triplets of MU locomotives, or a combination of both, are typically operated together as a single passenger train in MU service. This type of service does not make use of a conventional locomotive as a primary means of motive power. MU locomotive service is very similar to push-pull service as operated in the push mode with the cab car in the lead.

By focusing on enhancements to cab car and MU locomotive crashworthiness, FRA seeks to enhance the safety of the two most typical forms of passenger rail service in the U.S.

B. Front-End Frame Structures of Cab Cars and MU locomotives

Structurally, MU locomotives and cab cars built in the same period are very similar, and both are designed to transport and be occupied by passengers. The principal distinction is that cab cars do not have motors to propel themselves. Unlike MU locomotives and cab cars, conventional locomotives are not designed to be occupied by passengers—only by operating crewmembers. Concern has been raised about the safety of cab car-led and MU locomotive train service due to the closer proximity of the engineer and passengers to the leading end of the train than in conventional locomotive-led service.

The principal purpose of cab car and MU locomotive end frame structures is to provide protection for the engineer and passengers in the event of a collision where the superstructure of the vehicle is directly engaged and the underframe is either not engaged or only indirectly engaged in the collision. In the event of impacts with objects above the underframe of a cab car or MU locomotive, the end frame members are the primary source of protection for the engineer and the passengers. There are various types of cab cars and MU locomotives in current use. As discussed below, a flat-nosed, single-level cab car has been used for purposes of FRA-sponsored crashworthiness research. (The cab car was originally constructed as an MU locomotive but had its traction motors removed for testing.) Flat-nosed designs are representative of a large proportion of the cab car and MU locomotive fleet.

In a typical flat-nosed cab car, the end frame is composed of several structural elements that act together to resist inward deformations under load. The base of the end frame structure is composed of the end/buffer beam, which is directly connected to the draft sill of the vehicle. For cars that include stepwells, the side sills of the underframe generally do not directly connect to the end/buffer beam. There are four major vertical members connected to the end/buffer beam: two collision posts located approximately at the one-third points along the length of the beam, and two corner posts located at the outermost points of the beam. These structural elements are also connected together through two additional lateral members: a lateral member/shelf located just below the window frame structure, and an anti-telescoping plate at the top. The attachment of the end frame structure to the rest of the vehicle typically occurs at three locations. The first location is at the draft sill at the level of the underframe. This is the main connection where a majority of any longitudinal load applied to the end frame is reacted into the underframe of the vehicle. There are two other connections at the cant/roof rail located at either side of the car just below the level of the roof. When a longitudinal load is applied to the end frame, it is reacted by the draft sill and the cant rails into the main carbody structure. A schematic of a typical arrangement is depicted in Figure 1.

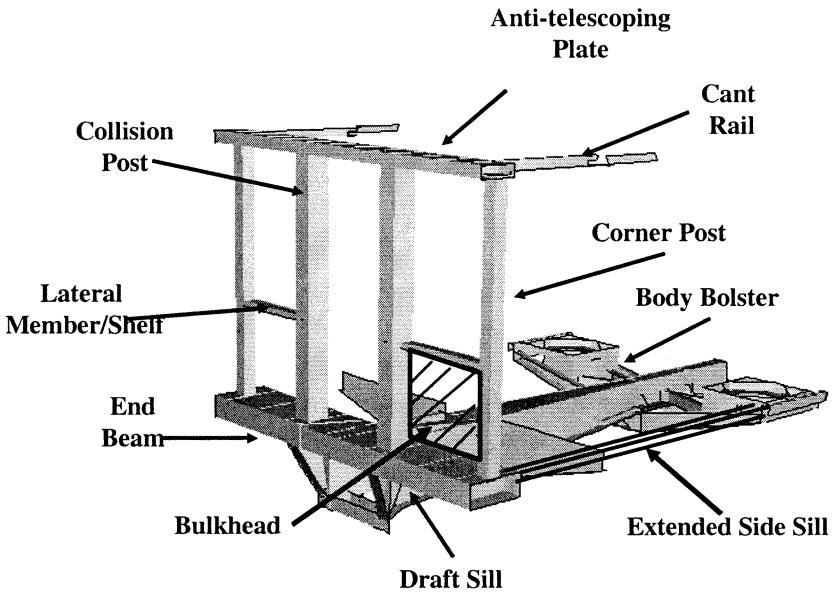

Figure 1. Schematic of the Main Structural Components of the Front-End of a Flat-Nosed Cab Car and MU Locomotive

C. Accident History

In a collision involving the front end of a cab car or an MU locomotive, it is vitally important that the end frame behaves in a ductile manner, absorbing some of the collision energy in order to maintain sufficient space in which the engineer and passengers can ride out the event. An example of a collision where the end frame did not effectively absorb collision energy occurred in Portage, IN, in 1998 when a NICTD train consisting of MU locomotives struck a tractor-tandem trailer carrying steel coils that had become immobilized on a grade crossing.[1] The leading MU locomotive impacted a steel coil at a point centered on one of its collision posts, the collision post failed, and the steel coil penetrated into the interior of the locomotive, resulting in three fatalities. Little of the collision energy was absorbed by the collision post, because the post had failed before it could deform in any significant way.

There are additional examples of incidents where the end frame of a cab car or an MU locomotive was engaged during a collision and a loss of survivable volume ensued due to the failure of end frame structures. As detailed in the NTSB accident reports referenced below, one such incident was the 1996 Secaucus, NJ collision between a cab car-led consist with a conventional locomotive-led consist,[2] in which the right corner post of the cab car and its supporting end frame structure had separated from the car.

[1] National Transportation Safety Board, ''Collision of Northern Indiana Commuter Transportation District Train 102 with a Tractor-Trailer Portage, Indiana, June 18, 1998,'' RAR–99–03, 07/26/1999.

[2] National Transportation Safety Board, ''Railroad Accident Report: Near Head-On Collision and Derailment of Two New Jersey Transit Commuter Trains Near Secaucus, New Jersey, February 9, 1996,'' RAR–97–01, 03/25/1997.

Another such incident was the 1996 Silver Spring, MD collision between a cab car-led consist with a locomotive-led consist, in which the cab car's left corner post and its supporting end frame structure had separated from the car.[3] Although the speeds associated with certain past events are greater than what can be fully protected against, and even though enhancements to passenger train emergency features and other requirements unrelated to crashworthiness, such as fire safety, may overall do as much or more to prevent or mitigate the consequences of these types of events, they do provide indicative loading conditions for developing structural enhancements that can improve crashworthiness performance.

FRA also notes that on January 26, 2005 in Glendale, CA, a collision involving an unoccupied sport utility vehicle (SUV) that was parked on the track, two Metrolink commuter trains, and a standing freight train resulted in 11 deaths and numerous injuries. Eight of the fatalities occurred on a cab car-led passenger train which derailed after striking the SUV, causing the cab car to be guided down a railroad siding, which resulted in an impact at an approximate speed of 49 mph with the standing freight train. After the collision with the standing freight train, the rear end of the lead cab car buckled laterally, obstructing the right-of-way of an oncoming, conventional locomotive-led passenger train. The rear end of the cab car raked the side of the conventional locomotive-led train, which was moving at an approximate speed of 51 mph, crushing occupied areas of that train. This incident involved enormous quantities of kinetic energy, and the underframe of the leading cab car crushed more than 20 feet inward. Because the strength of the end frame is ultimately dependent on the strength of the underframe, which failed, stronger collision posts and corner posts on the front end of the leading cab car would have been, in themselves, of little benefit in absorbing the collision energy. For this reason, as discussed below, FRA has been exploring other crashworthiness strategies, such as CEM, to help mitigate the effects of collisions involving higher impact speeds. Nevertheless, CEM will also require proper end frame performance in order to function as intended.

[3] National Transportation Safety Board, ''Collision and Derailment of Maryland Rail Commuter MARC Train 286 and National Railroad Passenger Corporation AMTRAK Train 29 Near Silver Spring, Maryland, February 16, 1996,'' RAR–97–02, 06/17/1997.

D. FRA and Industry Standards for Front-End Frame Structures of Cab Cars and MU Locomotives

Both the Federal government and the passenger railroad industry have been working together to improve the crashworthiness of cab cars and MU locomotives. As noted above, in 1999, after several years of development and in consultation with a working group comprised of key industry stakeholders, FRA promulgated the Passenger Equipment Safety Standards final rule. The rule included end frame structure requirements and other crashworthiness-related requirements for cab cars, MU locomotives, and other passenger equipment. In particular, the final rule provided for strengthened collision posts for new cab cars and MU locomotives (i.e., those ordered on or after September 8, 2000, or placed in service for the first time on or after September 9, 2002).

APTA also issued industry standards in 1999, in furtherance of its initiative to continue the development and maintenance of voluntary industry standards for the safety of railroad passenger equipment. In particular, APTA Standards SS–C&S–013–99 and SS–C&S–014–99 included provisions on end frame designs for cab cars and MU locomotives.[4] Specifically, APTA's standards included increased industry requirements for the strength of cab car and MU locomotive vertical end frame members—collision posts and corner posts. The 1999 APTA standards also included industry requirements for the deformation of these end frame vertical members, specifying that they must be able to sustain ''severe deformation'' before failure of the connections to the underframe and roof structures.

In January 2000, APTA requested that FRA develop information on the effectiveness of APTA's then-recently introduced Manual of Standards and Recommended Practices for passenger rail equipment, which included APTA SS–C&S–013–99 and APTA SS–C&S–014–99, and FRA's then-recently issued Passenger Equipment Safety Standards rule. This review was intended to look in particular at what increase in crashworthiness was obtained for cab cars and MU locomotives through the combination of these standards and regulations. FRA shared APTA's interest and included full-scale impact tests and associated planning and analysis activities in its overall research plan to gather this information. FRA then developed the details of the testing process in conjunction with APTA's Passenger Rail Equipment Safety Standards (PRESS) Construction-Structural (C&S) Subcommittee.

[4] American Public Transportation Association, Member Services Department, *Manual of Standards and Recommended Practices for Passenger Rail Equipment,* Issue of July 1, 1999.

Around this same time, questions arose in the passenger rail industry in applying the APTA standards for collision posts and corner posts to new cab cars and MU locomotives. Views differed as to what the standards actually specified-namely, the meaning of ''severe deformation'' in the provisions calling for corner and collision posts to sustain ''severe deformation'' before failure of the posts' attachments. Consequently, there was not common agreement as to whether particular designs met the standards. On May 22, 2003, APTA's PRESS Committee accepted the recommendation of its C&S Subcommittee to replace these provisions in the standards with a recommended practice that the corner and collision post attachments be able to sustain minimum prescribed loads with negligible deformation.[5] Both APTA Standards SS–C&S–013–99 and SS–C&S–014–99 were then otherwise incorporated in their entirety into APTA SS–C&S–034–99, Standard for the Design and Construction of Passenger Railroad Rolling Stock. (APTA combined these and other structural standards for the design of rail passenger equipment into a single document, for ease of reference for railroads and car builders.)

Nevertheless, when the decision to turn these provisions into a recommended practice was made, ongoing research from full-scale impact tests was showing that a substantial increase in cab car and MU locomotive crashworthiness could be achieved by designing the posts to first deform and, thereby, absorb collision energy before failing.[6] As discussed below, in August 2005, APTA's PRESS C&S Subcommittee accepted a revised ''severe deformation'' standard for collision and corner posts. The standard includes requirements for minimum energy absorption and maximum deflection. The standard thereby eliminates a deficiency in the 1999 APTA standards by specifying test criteria to objectively measure ''severe

[5] American Public Transportation Association, Member Service Department, *Manual of Standards and Recommended Practices for Passenger Rail Equipment,* Issue of May 1, 2004.

[6] Mayville, R., Johnson, K., Tyrell, D., Stringfellow, R., ''Rail Vehicle Cab Car Collision and Corner Post Designs According to APTA S–034 Requirements,'' American Society of Mechanical Engineers, Paper No. MECE2003–44114, November 2003.

deformation.'' This NPRM proposes to codify this standard.

E. Testing of Front-End Frame Structures of Cab Cars and MU locomotives

This section summarizes the work done by FRA and the passenger rail industry on developing the technical information to make recommendations for regulations requiring that corner and collision posts in cab car and MU locomotive front-end frames fail in a controlled manner when overloaded. Due to the collaborative work of FRA with the passenger rail industry, APTA's current passenger rail equipment standards include deformation requirements, which prescribe how these vertical members should perform when overloaded.

1. Designs Evaluated by FRA

Two end frame designs were developed for purposes of evaluating incremental improvements in the crashworthiness performance, in highway-rail grade crossing collision scenarios, of modern corner and collision post designs when compared against the performance of older designs. The first end frame design was representative of typical designs of passenger rail vehicles in the 1990s prior to 1999. (The first end frame design is referred to as the ''1990s design.'') The second end frame design incorporated all the enhancements required beginning in 1999 by FRA's Passenger Equipment Safety Standards rule in part 238 and also recommended beginning in 1999 by APTA's standards for corner post and collision post structures, respectively, SS–C&S–013 and SS–C&S–014. (The second end frame design is referred to as the State-of-the-Art (SOA) design.) The two end frame designs developed were then retrofitted onto two Budd Pioneer passenger rail cars for testing.

The SOA design differed principally from the 1990s design by having higher values for static loading of the end structure and by specifically addressing the performance of the collision and corner posts when overloaded. As noted above, the 1999 APTA standards for cab car and MU locomotive end structures included the following statement for both corner and collision posts:

> [The] post and its supporting structure shall be designed so that when it is overloaded * * * failure shall begin as bending or buckling in the post. The connections of the post to the supporting structure, and the supporting car body structure, shall support the post up to its ultimate capacity. The ultimate shear and tensile strength of the connecting fasteners or welds shall be sufficient to resist the forces causing the deformation, so that shear and tensile failure of the fasteners or welds shall not occur, even with severe deformation of the post and its connecting and supporting structural elements.

(See paragraph 4.1 of APTA SS–C&S–013–99, and paragraph 3.1 of APTA SS–C&S–014–99.) Although the term ''severe deformation'' was not specifically defined in the APTA standards, discussions with APTA technical staff led to specifying ''severe deformation'' in the SOA design as a horizontal crush of the corner and collisions posts for a distance equal to the posts' depth. Some failure of the parent material in the posts was allowable, but no failure would be allowed in the welded connections, as the integrity of the welded connections prevents complete separation of the posts from their connections.

An additional difference in the designs was the exclusion of the stepwells for the SOA design, to allow for extended side sills from the body bolster to the end/buffer beam. By bringing the side sills forward to support the end/buffer beam directly at the corners, the end/buffer beam can be developed to a size similar to the one for the 1990s design. In fact, recent cab car procurements have provided for elimination of the stepwells at the ends of the cars.

As compared to the 1990s design, the SOA design had the following enhancements: More substantial corner posts; a bulkhead sheet connecting the collision and corner posts, extending from the floor to the transverse member connecting the posts; and a longer side sill that extended along the engineer's compartment to the end beam, removing the presence of a stepwell. In addition to changes in the cross-sectional sizes and thickness of some structural members, another change in the SOA design was associated with the connection details for the corner posts. In comparison to the corner posts, the collision posts of both the 1990s and SOA designs penetrated both the top and bottom flanges of both the end/buffer beam and the anti-telescoping plate. This was based upon typical practice in the early 1990s for the 1990s design, and a provision in the APTA standard for the SOA design. Yet, the corner posts differed in that the corner posts for the 1990s design did not penetrate both top and bottom flanges of the end/buffer and anti-telescoping beams, while those in the SOA design did. The SOA design therefore had a significantly stiffer connection that was better able to resist torsional loads transferred to the anti-telescoping plate.

2. FRA Dynamic Impact Testing

Two full-scale, grade crossing impact tests were conducted as part of an ongoing series of crashworthiness tests of passenger rail equipment. The grade crossing tests were designed to address the concern of occupant vulnerability to bulk crushing resulting from offset/oblique collisions where the primary load-resisting-structure is the equipment's end frame design. Both tests were conducted in June 2002, and in each test a single cab car impacted a 40,000-lb steel coil resting on a frangible table at a nominal speed of 14 mph. The steel coil was situated such that it impacted the corner post above the cab car's end sill. The principal difference between the two tests involved the end frame design tested: in one test, the cab car was fitted with the 1990s end frame design; in the other, the cab car was fitted with the SOA end frame design.

Prior to the tests, the crush behaviors of the cars and their dynamic responses were simulated with car crush and collision dynamics models. The car crush model was used to determine the force/crush characteristics of the corner posts, as well as their modes of deformation.[7] The collision dynamics model was used to predict the extent of crush of the corner posts as a function of impact velocity, as well as the three-dimensional accelerations, velocities, and displacements of the cars and coil.[8] Pre-test analyses of the models were used in determining the initial test conditions and instrumentation test requirements.

The impact speed of approximately 14 mph for both tests was chosen so that there would be significant intrusion (more than 12 inches) into the engineer's cab in the test of the 1990s design, and limited intrusion (less than 12 inches) in the test of the SOA design. This 12-inch deformation metric was chosen to demarcate the amount of intrusion that leaves sufficient space for the engineer to ride out the collision safely.

During the full-scale tests, the impact force transmitted to the 1990s design end structure exceeded the corner post's predicted strength, and the corner post separated from its upper attachment. Upon impact, the corner post began to hinge near the contact point with the coil; subsequently, tearing at the upper connection occurred. The intensity of

[7] Martinez, E., Tyrell, D., Zolock, J., ''Rail-Car Impact Tests with Steel Coil: Car Crush,'' American Society of Mechanical Engineers, Paper No. JRC2003–1656, April 2003.

[8] Jacobsen, K., Tyrell, D., Perlman, A.B., ''Rail-Car Impact Tests with Steel Coil: Collision Dynamics,'' American Society of Mechanical Engineers, Paper No. JRC2003–1655, April 2003.

the impact ultimately resulted in the failure of the upper connection of the corner post to the anti-telescoping plate. More than 30 inches of deformation occurred.

The SOA design performed very closely to pre-test predictions made by the finite element and collision dynamics models. See Figure 2. The SOA design crushed approximately 9 inches in the longitudinal direction.

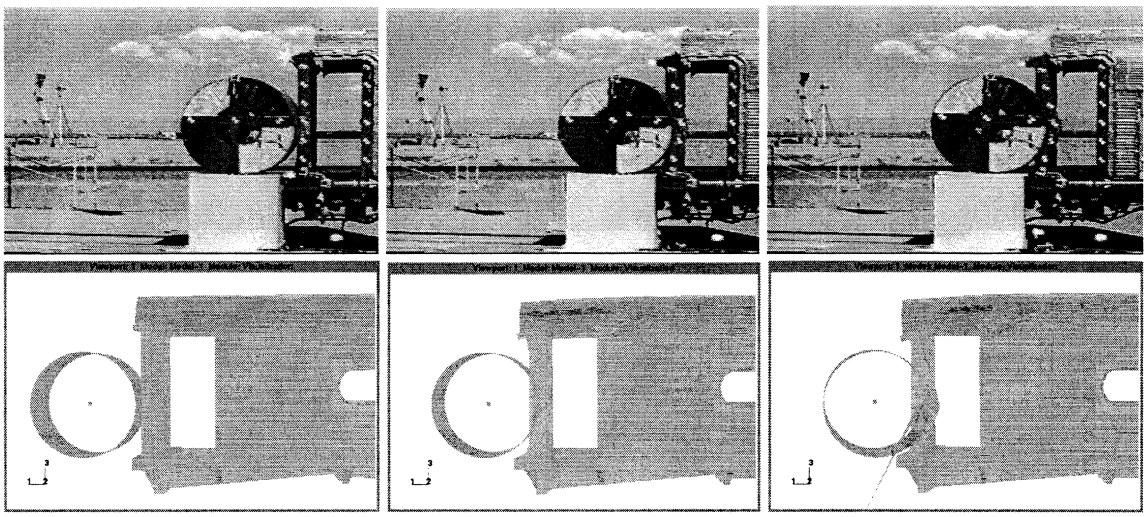

Figure 2. Still Photographs from Dynamic Full-Scale Tests of the SOA End Frame and Corresponding Dynamic Analysis

Pre-test analyses for the 1990s design using the car crush model and collision dynamics model were in close agreement with the measurements taken during the actual testing of the cab car end frame built to this design. The pre-test analyses also nearly overlay the test results for the force/crush characteristic of the SOA design. As a result, FRA believes that both sets of models are capable of predicting the modes of structural deformation and the total amount of energy consumed during a collision. Careful application of finite-element modeling allows accurate prediction of the crush behavior of rail car structures.

Both the methodologies used to design the cab car end frames and the results of the tests show that significant increases in rail passenger equipment crashworthiness can be achieved if greater consideration is given to the manner in which structural elements deform when overloaded. Modern methods of analysis can accurately predict structural crush (severe deformation) and consequently can be used with confidence to develop structures that collapse in a controlled manner. Modern testing techniques allow the verification of the crush behavior of such structures.

3. Industry Quasi-Static Testing

While FRA's full-scale, dynamic testing program was being planned and conducted with input from key industry representatives, several passenger railroads were incorporating in procurement specifications the then-newly promulgated Federal regulations and industry standards issued in 1999. Specifically, both LIRR and Metro-North had contracted with Bombardier for the development of a new MU locomotive design, the M7 series. Bombardier conducted a series of qualifying quasi-static tests on a mock-up, front-end structure of an M7, including a severe deformation test of the collision post. In addition to the severe deformation test, the other end frame members were also tested elastically at the enhanced loads specified in the APTA standards. The severe deformation qualification test was conducted on February 20, 2001.

The quasi-static testing of the M7 collision post was conducted on a mock-up test article. The first 19.25 feet of the car structure was fabricated, from the car's body bolster to the front end, so that the mock-up contained all structural elements. Load was applied at incrementally increasing levels with hydraulic jacks while being measured by load cells at the rear of the longitudinal end frame members. Initially, the elastic limit was determined for the post, and then the large deformation test was conducted. The test was stopped, for safety considerations, prior to full separation of the collision post with the end/buffer beam.

The maximum deflection in the collision post before yielding occurred at a position 42 inches above the end beam, near the top of the plates used to reinforce the collision post. The plastic shape the collision post acquired during testing was 'V'-shaped, with a plastic hinge occurring at 42 inches above the end beam. Some cracking and material failure occurred at the connection of the post with the end beam. The anti-telescoping plate was pulled down roughly three inches, and load was shed to the corner post via the shelf member and the bulkhead sheet. The shape that the collision post experienced is very similar to what was observed from the dynamic testing of the SOA corner post, as discussed above.

4. Comparative Analyses

Under FRA sponsorship, the Volpe Center, with cooperation from Bombardier, conducted non-linear, large deformation analyses to evaluate the performance of the cab car corner and collision posts of the SOA end frame design and the Bombardier M7 design under dynamic test conditions. One of the purposes of this research was to determine whether the level of crashworthiness demonstrated by the SOA prototype design could actually be achieved by a general production design—here, the M7 design. Pre-test

analysis predictions of the dynamic performance of the SOA corner post closely matched test measurements.[9] A similar analysis of the corner post was performed on the M7 design, and the results compared closely with the SOA design test and analysis results. Overall, the crashworthiness performance of the collision posts of the SOA and M7 designs were found to be essentially the same, and the M7 corner post design was even found to perform better than the SOA corner post design. This latter difference in performance is attributable to the sidewall support in the M7 design, which is not present in the SOA design.

Having established the fidelity of the models and modeling approach, a number of comparative simulations were conducted of both the SOA end frame and the M7 end frame under both dynamic and quasi-static test conditions to assess the equivalency of the two different tests for demonstrating compliance with the severe deformation standard. For both sets of tests, the modes of deformation were very similar at the same extent of longitudinal displacement, and the locations where material failure occurred were also similar. In addition, the predicted force-crush characteristics showed reasonable agreement within the repeatability of the tests. Figure 3, below, shows a comparison of the deformation modes for the M7, as observed from the quasi-static testing and as predicted for the dynamic coil loading condition.

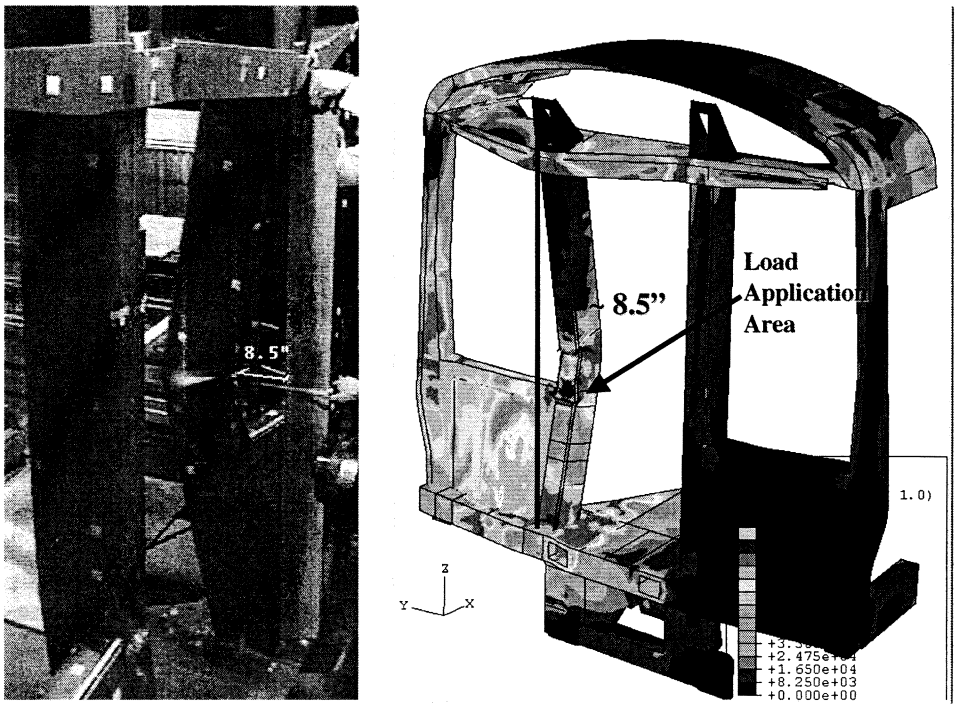

Quasi-static test Dynamic analysis

Figure 3. Comparison of Quasi-Statically Tested and Dynamically Predicted Modes of Deformation and Failure for the M7 MU Locomotive End Frame

F. Approaches for Specifying Large Deformation Requirements

As discussed above, APTA's initial ''severe deformation'' standard, published in 1999, did not contain specific methodologies or criteria for demonstrating compliance with the standard. Consequently, the dynamic tests performed by FRA and the Volpe Center, static tests performed by members of the rail industry, and analyses conducted by the Volpe Center and its contractors all helped to develop the base of information needed to identify the types of analyses and test methodologies to use. Further, evaluation of the test data, with the analyses providing a supporting framework, allowed development of appropriate criteria to demonstrate compliance.

The principal criteria developed involve energy absorption through end frame deformation and the maximum amount of that deformation. As shown by FRA and industry testing, energy can be imparted to conventional flat-nosed cab cars and MU locomotives either dynamically or quasi-statically. As shown by Volpe Center analyses, currently available engineering tools can be used to predict the results of such tests. Given the complexity of such analyses, and commensurate uncertainties, there is a benefit to maintaining dynamic testing as an option for evaluating compliance with any ''severe deformation'' standard.

There are tradeoffs between quasi-static and dynamic end frame testing of cab cars and MU locomotives. Both sets of tests prescribe a minimum amount of energy for end frame deformation. However, the manner in which the energy is applied is different, and the setup of the two types of tests is different. As demonstrated by the tests

[9] Martinez, E., Tyrell, D., Zolock, J. Brassard, J., ''Review of Severe Deformation Recommended Practice Through Analyses—Comparison of Two Cab Car End Frame Designs,'' American Society of Mechanical Engineers, Paper No. IMECE2005–70043, March 2005.

conducted by Bombardier, quasi-static tests can be conducted by rail equipment manufacturers at their own facilities. Dynamic tests require a segment of railroad track with appropriate wayside facilities; there are few such test tracks available. Nevertheless, dynamic tests do not require detailed knowledge of the car structure to be tested, and allow for a wide range of structural designs. Quasi-static tests require intimate knowledge of the structure being tested, to assure appropriate support and loading conditions, and development of quasi-static test protocols requires assumptions about the layout of the structure, confining structural designs. In addition, dynamic tests more closely approximate accident conditions than quasi-static tests do.

In August 2005, APTA's PRESS C&S Subcommittee accepted a revised ''severe deformation'' standard for collision and corner posts. The standard includes requirements for minimum energy absorption and maximum deflection. The form of the standard is largely based on the testing done by Bombardier, and therefore is quasi-static. The standard eliminates a deficiency of the 1999 standards by specifying test criteria to objectively measure ''severe deformation.'' The standard can be readily applied to conventional flat-end cab cars and MU locomotives, but is more difficult to apply to shaped-nosed cab cars and MU locomotives or those with crash energy management designs.

In addition, APTA as well as several equipment manufacturers have expressed an interest in maintaining the presence of a stairwell on the side of the cab car or MU locomotive opposite from where the locomotive engineer is situated. This feature enables multi-level boarding from both low and higher platforms. As such, FRA and the APTA PRESS C&S group worked together to develop language associated with providing a safety equivalent to the requirements stipulated for cab car and MU locomotive corner posts in terms of energy absorption and graceful deformations. The group agreed that for this arrangement there is sufficient protection afforded by the presence of two corner posts (an end corner post and an internal adjacent body corner post) that are situated in front of the occupied space. The load requirements stipulated for such posts differ in that longitudinal requirements are not equal to the transverse requirements. This in effect changes the shape of these posts so that they are not equal in both width and height. For the end corner post the longitudinal loads are smaller than the transverse loads. The opposite is true for the body corner post. Despite the changes in the loading requirements from longitudinal to transverse, it was agreed to allow for the combined contribution of both sets of corner posts to provide an equivalent level of protection to that required for corner posts in other cab car and MU locomotive configurations. See the discussion in the section-by-section on the structural requirements for cab cars and MU locomotives with a stairwell located on the side of the equipment opposite from where the locomotive engineer is situated.

G. Crash Energy Management and the Design of Front-End Structures of Cab Cars and MU Locomotives

Research has shown that passenger rail equipment crashworthiness in train-to-train collisions can be significantly increased if the equipment structure is engineered to crush in a controlled manner. One manner of doing so is to design sacrificial crush zones into unoccupied locations in the equipment. These crush zones are designed to crush gracefully, with a lower initial force and increased average force. With such crush zones, energy absorption is shared by multiple cars during the collision, consequently helping to preserve the integrity of the occupied areas. While developed principally to protect occupants in train-to-train collisions, such crush zones can also potentially significantly increase crashworthiness in highway-rail grade-crossing collisions.[10]

The approach of including crush zones in passenger rail equipment is termed CEM, and it extends from current, conventional practice. Current practice for passenger equipment operated at speeds not exceeding 125 mph (i.e., Tier I passenger equipment under part 238) requires that the equipment be able to support large loads without permanent deformation or failure, but does not specifically address how the equipment behaves when it crushes. CEM prescribes that car structures crush in a controlled manner when overloaded and absorb collision energy. In fact, for passenger equipment operating at speeds exceeding 125 mph but not exceeding 150 mph (i.e., Tier II passenger equipment under part 238), FRA requires that the equipment be designed with a CEM system to dissipate kinetic energy during a collision, see § 238.403, and Amtrak's Acela Express trainsets were designed with a CEM system complying with this requirement.

FRA notes that Metrolink is in the process of procuring a new fleet of cars utilizing CEM technology. As part of its response to the Glendale, CA train incident on January 26, 2005, Metrolink determined that CEM design specifications should be included in this planned procurement, and, in coordination with APTA, approached FRA and FTA to draft such specifications. In turn, FRA and FTA formed the ad hoc Crash Energy Management Working Group in May 2005. This working group included government engineers and participants from the rail industry, including passenger railroads, suppliers, labor organizations, and industry consultants, many of whom also participated in the Crashworthiness/Glazing Task Force. The working group developed a detailed technical specification for crush zones in passenger cars for Metrolink to include in its procurement specification, as well as for other passenger railroads to include in future procurements of their own. Metrolink released its specification as part of an invitation for bid, and then awarded the contract to manufacture the equipment to Rotem, a division of Hyundai.

Rotem is currently developing a shaped-nose, CEM design for new Metrolink cab cars. Because of the shaped-nose, it is more difficult to engineer structural members identifiable as full-height collision posts and corner posts that extend from the underframe to the cantrail or roofline at the front end, as specified in the current APTA standard. Consequently, to meet the APTA standard, FRA believes that Rotem will need to locate the collision and corner posts inboard of the crush zone, rather than place them at the extreme front end of the cab car. Further, as currently written, the APTA quasi-static standard does not expressly take into account the energy absorption capability of the crush zone, even if the crush zone would likely be engaged in a grade-crossing impact. Although the APTA standard acknowledges the use of shaped-nose and CEM designs, there remains uncertainty in the standard associated with demonstration of compliance with such designs. (The APTA standard does provide that on cars with CEM designs, compliance be demonstrated either through analysis or testing as agreed to by the vehicle builder and purchaser, but no test methodology or criteria are provided.)

A dynamic test standard would place fewer constraints on the layout of the cab car end structure and would allow

[10] Tyrell, D.C., Perlman, A.B., ''Evaluation of Rail Passenger Equipment Crashworthiness Strategies,'' Transportation Research Record No. 1825, pp. 8–14, National Academy Press, 2003.

the energy absorption capability of the crush zone to be expressly taken into account in the design of the collision and corner post structures. As noted, the NPRM provides an option for the dynamic testing of cab cars and MU locomotives. Nevertheless, FRA makes clear that the Task Force did not reach consensus on recommending the inclusion of dynamic testing in this NPRM. However, FRA believes that the results of the crashworthiness research discussed above provide strong support for including dynamic testing in the rule, and that it is particularly necessary to address what FRA believes will be a growing number of cab cars and MU locomotives utilizing CEM designs. This need has become more apparent since the Task Force meetings occurred, and FRA has scheduled additional, full-scale crash testing to facilitate the use of both quasi-static and dynamic test standards.

IV. Section-by-Section Analysis

Proposed Amendments to 49 CFR Part 238, Passenger Equipment Safety Standards

Subpart A—General

Section 238.13 Preemptive Effect

Existing § 238.13 informs the public as to FRA's views regarding the preemptive effect of this part by citing and restating the statutory provision that governed the regulation's preemptive effect at the time that it was promulgated (49 U.S.C. 20106). See 64 FR 25581. This statutory provision was amended by the Homeland Security Act of 2002, Pub. L. No. 107–296, 116 Stat. 2135, 2319 (November 25, 2002), subsequent to the issuance of the May 12, 1999 final rule promulgating the Passenger Equipment Safety Standards. Consequently, FRA is proposing to amend § 238.13 so that it is more consistent with the revised statutory language expressly addressing railroad security.

As amended to date, 49 U.S.C. 20106 provides that all regulations and orders prescribed or issued by the Secretary of Transportation (with respect to railroad safety matters) and the Secretary of Homeland Security (with respect to railroad security matters) preempt any State law, regulation, or order covering the same subject matter, except an additional or more stringent provision necessary to eliminate or reduce an essentially local safety or security hazard that is not incompatible with a Federal law, regulation, or order and that does not unreasonably burden interstate commerce. The Congressional intent behind the statute is to promote national uniformity in railroad safety and security standards and to avoid subjecting the railroads to a variety of enforcement in 50 different State judicial and administrative systems. The courts have construed the ''essentially local safety or security'' exception very narrowly, holding that it is designed to enable States to respond to local situations which are not statewide in character and not capable of being adequately encompassed within uniform national standards. With the exception of such a provision directed at an essentially local safety or security hazard, 49 U.S.C. 20106 preempts any State statutory, regulatory, or common law standard covering the same subject matter as a Federal law, regulation, or order, including an FRA regulation or order.

In addition, since issues have arisen regarding the preemptive effect of this part on the safety of operating a cab car as the leading unit of a passenger train, FRA believes that clarification of its views on the matter is needed to address any misunderstanding. As described below, through a variety of initiatives spanning more than a decade, FRA has comprehensively and intentionally covered the subject matter of the requirements for passenger equipment, planning for the safe use of passenger equipment, and the manner in which passenger equipment is used. In so doing, FRA believes that it has preempted any State law, regulation, or order, including State common law, concerning the operation of a cab car or MU locomotive as the leading unit of a passenger train. This NPRM on cab car and MU locomotive crashworthiness further refines FRA's comprehensive regulation of passenger equipment safety and serves to show that the operation of cab cars and MU locomotives is a matter regulated by FRA, and not one which FRA has left subject to State statutory, regulatory, or common law standards covering that subject matter.

Emergency Order No. 20

In the wake of two serious accidents, each involving a passenger train operating with a cab car in the lead position in ''push-pull service,'' FRA issued Emergency Order No. 20 (EO 20) on February 22, 1996 (61 FR 6876), amended on March 5, 1996 (61 FR 8703). EO 20 generally required passenger railroads operating push-pull or MU locomotive service to have in their operating rules a delayed-in-block rule and a rule requiring communication of wayside signals, and required passenger railroads to mark and test exits used for emergency egress. EO 20 also required passenger railroads which operated push-pull or MU locomotive service to develop and submit interim system safety plans for the purpose of enhancing the safety of such operations. FRA noted that it would review the plans submitted and, based on that review, it would ''determine whether other mandatory action appears necessary to address hazards associated with the subject rail passenger service.'' 61 FR 6882. Thus, FRA's approach was to have passenger railroads review their approach to push-pull and MU operations, and FRA would then review the railroads' plans and determine what further action to take. FRA ultimately did take further action to regulate push-pull and MU operations as part of its overall regulation of passenger equipment safety.

Passenger Safety Rulemakings

At the time EO 20 was issued in February 1996, FRA had been moving forward with rulemakings to establish comprehensive safety standards for railroad passenger equipment. As noted above, the rulemakings arose out of the Secretary of Transportation's commitment in 1994 to develop safety standards for railroad passenger equipment, soon followed by enactment of the Federal Railroad Safety Authorization Act of 1994. In Section 215 of the Act, Congress directed the Secretary to specifically consider a number of matters before prescribing regulations, such as the crashworthiness of the cars, interior features (including luggage restraints, seat belts, and exposed surfaces) that may affect passenger safety, and any operating rules and conditions that directly affect safety not otherwise governed by regulations. Congress granted the Secretary the authority to make applicable some or all of the standards to cars existing at the time the regulations were prescribed, as well as to new cars. Moreover, as noted above, Congress authorized the Secretary, when prescribing regulations, issuing orders, and making amendments under this section, to consult with Amtrak, public authorities operating railroad passenger service, other railroad carriers transporting passengers, organizations of passengers, and organizations of employees. 49 U.S.C. 20133. As delegated from the Secretary, FRA has exercised these grants of authority.

Passenger Train Emergency Preparedness

Using the consultative authority granted by Congress, FRA convened the first meeting of the Passenger Train Emergency Preparedness Working

Group in August 1995, focused on the development of emergency preparedness planning requirements for commuter and intercity passenger train operations. The rulemaking culminated in the publication of a final rule on Passenger Train Emergency Preparedness on May 4, 1998. 63 FR 24630.

As described above, this regulation requires railroads that operate intercity or commuter passenger train service or that host the operation of such service to adopt and comply with written emergency preparedness plans approved by FRA. In addition, as noted above, the regulation specifies marking and instruction requirements for emergency window and door exits, and provides for the inspection, maintenance, and repair of emergency window and door exits. The regulation therefore codified and expanded EO 20's requirements to mark and inspect emergency exits.

In formalizing a planning requirement for emergency preparedness, FRA acknowledged that the plans would be integrated into commuter railroads' overall system safety planning efforts. 63 FR at 24636. FRA announced that it would monitor the implementation of the rule and evaluate whether further rulemaking or other action were necessary to achieve the desired improvements in emergency preparedness. *Id.*

Passenger Equipment Safety Standards

Using the same consultative authority granted by Congress, FRA convened the first meeting of the Passenger Equipment Safety Standards Working Group in June 1995, as mentioned above. Thereafter in June 1996, FRA issued an ANPRM on Passenger Equipment Safety Standards. 61 FR 30672. In that notice, FRA stated its views and solicited comments on possible safety regulations, including requirements addressing inspection, testing, and maintenance procedures, equipment design and performance criteria related to passenger and crew survivability in the event of a train accident, and the safe operation of passenger train service. FRA considered system safety planning to be the heart of its approach to passenger equipment safety. 61 FR 30684.

In the ANPRM, FRA stressed the need for flexibility in the development of system safety plans, noting that they could range from a relatively simple document to a detailed document laying out a comprehensive approach for designing, testing, and operating state-of-the-art high-speed passenger rail systems. In this regard, FRA provided an example of how system safety could be approached, breaking down the railroad system into four major component systems: interfaces; right-of-way; equipment; and transportation. 61 FR 30685. FRA noted that many passenger railroads operate at least partially as a tenant on the right-of-way and property of another railroad, and may have little or no control over some of the major risk components of the risk analysis, such as the interfaces and right-of-way components. 61 FR 30686. Nevertheless, FRA explained that the ''systems'' methodology still has considerable merit when applied to the remaining subsystems, in that the analysis could help define the equipment crashworthiness features required for its intended purpose or the operational limitations needed to improve or retain safety levels, but that a true system safety approach cannot be applied to a system that has major risk components that are constrained.

FRA also solicited comments on various aspects of system safety planning, including information regarding any existing plans in use at the time. FRA was particularly interested in ways to tailor system safety programs to fit individual situations, so that the process made good business sense and addressed safety needs, and was not a regulatory burden that did not benefit safety.

Following the consideration of comments received on the ANPRM and recommendations of the Working Group, FRA issued an NPRM to establish comprehensive safety standards for passenger equipment, including cab cars, as discussed above. 62 FR 49728; September 23, 1997. Among FRA's proposals in the NPRM were requirements for system safety plans and programs which would apply to both Tier I and Tier II passenger equipment. FRA indicated that through the system safety process, railroads would be required to identify, evaluate, and seek to eliminate or reduce the hazards associated with the use of passenger equipment over the railroad system. FRA noted that the importance of system safety planning had been recognized in EO 20, and that the commuter railroads had subsequently committed to the development of comprehensive system safety plans, which went beyond the limited scope of the interim system safety plans that had been required by EO 20. 62 FR 49733.

In the NPRM, FRA explained that while consensus was reached within the Working Group on system safety planning requirements as they would apply to Tier II passenger equipment, the Working Group did not reach consensus on the requirements as they would apply to Tier I passenger equipment. 62 FR 49760. Although the Working Group agreed that passenger rail systems should apply system safety planning to Tier I passenger equipment, some members of the Working Group questioned whether this should be required by law. In particular, FRA noted the position of the American Public Transit Association (now American Public Transportation Association, APTA), which objected to FRA's regulation of any aspect of system safety planning. 62 FR 49734. APTA suggested that the commuter railroads be allowed to regulate themselves in this area because the system safety efforts they were undertaking were more comprehensive in nature than anything FRA sought to require, and were not limited to rail equipment issues. FRA therefore invited comment on APTA's suggestion and on a number of other issues with respect to system safety planning requirements, so that it could decide what approach to take in the final rule with respect to system safety plans. In addition, FRA proposed numerous other requirements for the safe operation of passenger train service, including equipment design and performance criteria related to passenger and crew survivability in the event of a train accident, and inspection, testing, and maintenance procedures.

FRA received extensive comments on the NPRM, including comments regarding the question of system safety planning. Some comments suggested that system safety planning should be completely voluntary, to allow for maximum flexibility. Other commenters, however, argued that FRA had to prescribe specific mandatory requirements for those aspects of system safety that it chose to address. All of the comments received on the proposed rule, both written and oral, were considered by FRA in promulgating the final rule on May 12, 1999. 64 FR 25540. FRA's ultimate regulatory decision in issuing a final rule on passenger equipment safety standards was to address only certain aspects of system safety planning, focused primarily on rail passenger equipment, rather than to require generally that the railroads implement comprehensive system safety plans. 64 FR 25549. While FRA acknowledged that the plans required by the regulation would be part of larger system safety planning efforts, only the elements specifically addressed in the rule would be enforced. As with most of FRA's regulations, the final rule prescribed minimum Federal safety

standards and did not restrict a railroad and other persons subject to the regulation from adopting additional or more stringent requirements not inconsistent with the final rule. 64 FR 25575.

FRA made a conscious decision to regulate in a way that allowed greater flexibility in overall system safety planning for Tier I passenger equipment, stating in the final rule that:

> FRA will closely monitor Tier I railroad operations in their development and adherence to voluntary, comprehensive system safety plans. FRA has already established a liaison relationship with APTA and has already begun participating in system safety plan audits on commuter railroads. FRA is using this involvement to enrich FRA's Safety Assurance and Compliance Program (SACP) efforts on these railroads-which, unlike the triennial audit process for system safety plans, is a continuous activity with frequent on-property involvement by FRA safety professionals. FRA will reconsider its decision not to impose a general requirement for system safety plans on Tier I railroad operations if the need to do so arises. 64 Fed. Reg. at 25549.

FRA's participation in the APTA audit process was intended to complement FRA's regulatory requirements, and other initiatives such as the SACP process. It was not, however, a delegation of responsibility to the industry to regulate itself.

FRA did not impose system safety planning requirements that specifically addressed push-pull or MU locomotive operations for Tier I passenger equipment. However, FRA considered the proper scope of system safety planning requirements that it should impose for such operations, and chose not to impose general system safety requirements for this equipment. Instead, in the 1999 final rule FRA imposed a myriad of substantive requirements intended to ensure the safety of the equipment in whatever operational mode it is used. For instance, using the statutory authority to apply requirements of the final rule to existing passenger equipment, FRA generally required that all Tier I passenger equipment, including both new and existing cab cars, have a minimum buff strength of 800,000 pounds, as specified in 49 CFR 238.203. FRA also noted that these substantive requirements, like the system safety planning requirements, might be further addressed in subsequent rulemaking. For example, FRA specifically stated in the final rule that additional effort needed to be made to enhance corner post safety standards for cab cars and MU locomotives—leading to the NPRM that FRA is issuing today. 64 FR at 25607. However, FRA made clear that the very fact that it identified the possibility of specifying additional regulations did not nullify the preemptive effect of the final rule, both in terms of the issues addressed by the specific requirements imposed, and those as to which FRA considered specific requirements but ultimately chose to allow a more flexible approach.

FRA extended additional requirements to Tier II passenger equipment, both in terms of system safety planning and substantive requirements that eliminated the possibility of operating Tier II passenger equipment in the push-pull mode, or in any mode with passengers occupying the leading car in a train. In addition to the specific system safety planning requirements generally applicable to all passenger equipment (fire safety; hardware and software safety; inspection, testing, and maintenance; training, qualifications, and designations; and pre-revenue service testing), FRA required additional system safety planning for Tier II passenger equipment. Railroads are required to have a written plan for the safe operation of the equipment, both prior to its operation and also before introducing new technology in the equipment that affects a safety system on the equipment. These plans may be combined with the other plans required for all passenger equipment. See 64 FR 25646–25647; 49 CFR 238.601 and 238.603. Although the rule does not require FRA approval of the plans, it does generally require FRA approval of Tier II passenger equipment operations, pursuant to 49 CFR 238.111(b)(7).

FRA also adopted structural requirements for Tier II passenger equipment that require the equipment to withstand collision forces not possible for conventional cab cars or MU locomotives to withstand, thus effectively prohibiting the use of such equipment in Tier II passenger trains. FRA specifically stated with regard to Tier II passenger equipment that the crash energy management requirements ''will effectively prevent a conventional cab car from operating as the lead vehicle in a Tier II passenger train because such equipment cannot absorb 5 MJ of collision energy ahead of the train operator's position.'' 64 FR at 25630. Morever, FRA expressly prohibited passenger seating in the leading unit of Tier II passenger trains, see 49 CFR 238.403(f), which, in turn, effectively prohibits the operation of push-pull or MU locomotive service-methods of operation in which passengers can occupy the lead unit of a train. In fact, FRA specifically stated that cab cars ''should not be used in the forward position of a train that travels at speeds greater than 125 mph.'' *Id.* FRA imposed no such prohibition on passenger seating in the lead unit of a Tier I passenger train.

FRA's decisions to require more general system safety planning for Tier II passenger operations, and to impose substantive requirements that in both effect and application prohibit passenger seating in the leading unit of Tier II passenger trains, make clear that these issues were carefully considered in the 1999 final rule. Of course, by virtue of imposing stricter standards on Tier II passenger equipment than Tier I passenger equipment, FRA did not intend States to step in and regulate Tier I passenger equipment. On the contrary, FRA recognized the operational differences between Tier I and Tier II passenger equipment, and purposely chose to address these two types of equipment differently. Where FRA has prohibited one thing and chosen not to prohibit another, such as prohibiting cab car-forward operations for Tier II and not for Tier I, FRA intended to allow a railroad to do that which FRA did not prohibit. FRA's regulatory choice was intended to be preemptive of State standards with regard to both Tier I and Tier II passenger equipment.

As FRA understands the Supreme Court's standard for covering the subject matter, State or local governments, courts or litigants may not carve out subsets of subject matters FRA has covered. Accordingly, when FRA has regulated the construction of a railcar, FRA clearly permits its operation on the general system of railroad transportation unless FRA explicitly sets limits on its operation, and State or local governments may not prohibit certain of those operations or impose an independent duty of care with respect to those operations. FRA's comprehensive regulation of this area has covered the subject matter of all aspects of the safe operation of cab cars and MU locomotives, leaving no room for State standards. States are free of course to craft standards to address the extremely rare ''essentially local safety or security hazard,'' so long as the standards otherwise meet the three part test of 49 U.S.C. 20106.

Nevertheless, as explained below, a State or local entity which owns or controls a railroad may direct that railroad to exceed FRA's requirements, provided that it does so in a capacity that is wholly distinct, and does not derive, from the statutory provision governing the preemptive effect of FRA's regulation of this area. Commuter rail service is typically provided by

public benefit corporations chartered by State or local governments, whereas freight rail service is provided almost exclusively by non-governmental entities. Just as the owner of a freight railroad may direct that its railroad's operations exceed FRA's minimum safety standards, so may a State or local body, acting through the public benefit corporation that it has chartered, direct its railroad to operate in a manner more restrictive than, but not inconsistent with, FRA's requirements. FRA makes clear that, when a State or local government entity acts in this capacity, it is not acting as a regulator of railroad operations. It is effectively acting in a private capacity concerning the operation of its *own* railroad, and the fact that it is a public entity does not somehow change its action into a law, regulation, or order related to railroad safety or security that invokes the statutory provision governing the preemptive effect of FRA's regulation of this area. A State or local entity's ability to act in this capacity concerning its *own* railroad is wholly distinct, and does not derive, from any provision of 49 U.S.C. 20106.

Because FRA's safety standards are minimum safety standards, a State or local entity's ability to act in this manner is the same ability that a non-governmental entity which owns a freight railroad would have, should it decide to provide passenger service, to direct its passenger operations in a manner more stringent than, but not inconsistent with, FRA's requirements. The fact that a State or local entity is involved—and not a private entity—does not alter in any way FRA's views as to the preemptive effect of FRA's comprehensive regulation of passenger equipment safety, and the safe operation of cab cars and MU locomotives in particular.

Similarly, where FRA has required passenger railroads to engage in system safety planning or has not required such planning because the passenger railroads, in FRA's judgment, are doing an adequate job of system safety planning, FRA intends to preempt State and local regulation precisely because FRA has already decided what system safety planning each railroad should be doing based on its own circumstances. The relevant circumstances vary more widely among passenger railroads than among freight railroads and, at this level of specificity, the best and most effective planning is aimed squarely at the circumstances of each individual passenger railroad. Therefore, State or local regulation of such system safety planning is also preempted.

Further, FRA's decision to revisit in this NPRM subjects addressed in the 1999 final rule does not change the preemptive effect of the comprehensive requirements imposed in that rule. As noted earlier, FRA's recognition in the 1999 final rule that additional work needed to be completed to enhance the crashworthiness of cab cars and MU locomotives does not nullify the preemptive effect of the standards then imposed for this equipment. In the same way, FRA's recognition in this NPRM that fuller application of crash energy management technologies to cab cars and MU locomotives could enhance their safety would not nullify the preemptive effect of the standards arising from the rulemaking. FRA continually strives to enhance railroad safety, has an active research program focused on doing so, and sets safety standards that it believes are necessary and appropriate for the time that they are issued with a view to amending those standards as circumstances change. The proposed imposition of enhanced crashworthiness requirements for cab cars and MU locomotives in Tier I passenger trains, and the specific recognition that this equipment will be operated cab car forward in the push mode, demonstrate that FRA has imposed, and will continue to impose, the requirements that it deems necessary for the safe operation of cab cars and MU locomotives in all of the configurations in which they will be operated. FRA is thoroughly familiar, through the inspections it performs regularly, with the physical properties and operating characteristics of each passenger railroad. FRA has applied that knowledge in deciding to permit those railroads to operate cab cars and MU locomotives as the leading units of Tier I passenger trains, and FRA is not aware of any circumstances on any of those passenger railroads which would qualify under the statute as essentially local safety or security hazards affecting those operations.

Subpart C—Specific Requirements for Tier I Passenger Equipment

Section 238.205 Anti-climbing mechanism

FRA is proposing to amend paragraph (a) of this section to correct an error in the rule text. In the relevant part, this paragraph currently states that ''all passenger equipment * * * shall have at both the forward and rear ends an anti-climbing mechanism capable of resisting an upward or downward vertical force of 100,000 pounds without failure.'' However, FRA had intended that the words ''without failure'' actually read as ''without permanent deformation,'' as stated in the preamble accompanying the issuance of this paragraph. Specifically, FRA explained in the accompanying preamble that the anti-climbing mechanism must be capable of resisting an upward or downward vertical force of 100,000 pounds ''without permanent deformation.'' See 64 FR 25604; May 12, 1999. Use of the ''without permanent deformation'' criterion is consistent with North American industry practice, and FRA had not intended to relax that practice. Consequently, FRA is proposing to correct § 238.205(a) to expressly require that the anti-climbing mechanism be capable of resisting an upward or downward vertical force of 100,000 pounds without permanent deformation.

Section 238.211 Collision posts

FRA is proposing to adopt the provisions of paragraphs (a) through (d) of section 5.3.1.3.1, Cab-end collision posts, of APTA Standard SS–C&S–034–99, Rev. 1. FRA is also proposing to modify these provisions for purposes of their adoption as a Federal regulation.

This proposal would enhance current requirements for collision posts at the forward ends of cab cars and MU locomotives. In sum, paragraph (b) currently requires that each locomotive, including a cab car and an MU locomotive, ordered on or after September 8, 2000, or placed in service for the first time on or after September 9, 2002, have two collision posts at its forward end, each post capable of withstanding a 500,000-pound longitudinal force at the point even with the top of the underframe and a 200,000-pound longitudinal force exerted 30 inches above the joint of the post to the underframe. These requirements were based on AAR Standard S–580, and had been the industry practice for all locomotives built since August 1990. *See* 64 FR 25606. Subsequently, industry standards for locomotive crashworthiness have been enhanced, with APTA focusing on standards for passenger-occupied locomotives, i.e., cab cars and MU locomotives, and the AAR focusing on standards for freight locomotives. The AAR's efforts helped support development of the Locomotive Crashworthiness rulemaking, published as a final rule on June 28, 2006. *See* 71 FR 36887. That final rule specifically addresses the safety of freight locomotives and does not apply to passenger-occupied locomotives (i.e., cab cars and MU locomotives). Nevertheless, FRA believes that conceptual approaches taken in the

Locomotive Crashworthiness final rule are applicable to this rulemaking, as discussed below. To clearly delineate the relationship between the Locomotive Crashworthiness final rule and part 238, FRA proposes that a cross-reference be inserted in the introductory language of paragraph (b) to indicate that as the locomotive requirements for collision posts become effective for locomotives manufactured on or after January 1, 2009, those more stringent requirements will apply to conventional locomotives (though not to cab cars or MU locomotives).

FRA is proposing to correct paragraph (b)(2) so that the rule text is consistent with the clear intent of the provision. As explained in the preamble accompanying the issuance of this paragraph, paragraph (b)(2) provides for the use of an equivalent end structure in place of the two forward collision posts described in paragraph (b)—specifically, paragraphs (b)(1)(i) and (ii). *See* 64 FR 25606. However, the rule text makes express reference only to the collision posts in ''paragraph (b)(1)(i) of this section.'' This provision was not intended to be limited to the collision posts described in paragraph (b)(1)(i) alone, but instead to the collision posts described in paragraph (b)(1) as a whole—both paragraphs (b)(1)(i) and (ii). FRA is, therefore, proposing to correct this clear error in the rule text.

FRA is proposing to redesignate current paragraph (c) as paragraph (d) and add a new paragraph (c) in its place. Specifically, proposed paragraphs (c)(1)(i) and (ii) are similar to paragraphs (b)(1)(i) and (ii). One principal difference is that the proposed regulation would require that each collision post be able to support the specified loads for angles up to 15° from the longitudinal. In effect, this would require each post to support a significant lateral load, and is intended to reflect the uncertainty in the direction a load is imparted during an impact. The proposed standard is also intended to encourage the use of collision posts with closed (e.g., rectangular) cross sections, rather than with open (e.g., I-beam) cross sections. Beams with open cross sections tend to twist and bend across the weaker axis when overloaded, regardless of the direction of load. Beams with closed cross sections are less likely to twist when overloaded, and are more likely to sustain a higher load as they deform, absorbing more energy.

Proposed paragraph (c)(1)(iii) does not have a counterpart in paragraph (b). This paragraph would require that the collision post be able to support a 60,000-pound longitudinal load applied anywhere along its length, from its attachment to floor-level structure up to its attachment to roof-level structure. This proposed regulation is intended to provide a minimum level of collision post strength at any point along its full height-not only at its connection to the underframe or at 30 inches above that point. The proposed requirement must also be met for any angle within 15 degrees of the longitudinal axis.

Proposed paragraph (c)(2) would require that each collision post also be able to absorb a prescribed amount of energy without separation from its supporting structure. This proposed requirement is intended to provide a level of protection similar to the SOA design, as discussed in the Technical Background section of the preamble, above. A quasi-static test, such as the test conducted by Bombardier on the M7 design, may be used to show compliance, or the builder may utilize the dynamic test method.

Designs without flat forward ends include shaped-nosed designs such as those by Colorado Railcar and, as discussed above, the design being developed by Rotem for Metrolink. Because such designs place the engineer back from the extreme forward end of the vehicle, there is the potential for significantly increased protection for the engineer in collisions. In this regard, FRA is proposing to add paragraph (e) to require an equivalent structure to be present in front of occupied space but set back from the very end of the cab car or MU locomotive. Such structures may be part of the nose of the equipment or the CEM system, or both. Paragraph (e) would provide relief from utilization of a traditional end frame structure provided that an equivalent level of protection is afforded by the components of the CEM system. In the FRA CEM design tested in March 2006, the end frame structure was reinforced in order to support the loads introduced through the deformable anti-climber. Significantly more energy was absorbed in the deformation of the deformable anti-climber than the combined requirements outlined for both collision and corner posts while preserving all space for the locomotive engineer and passengers. In the design under development for Metrolink in southern California, an equivalent end frame structure is placed outboard of occupied space with crush elements between the very end of the nose and the equivalent end frame. For a grade crossing collision above the underframe of the cab car it is expected that perhaps an order of magnitude or larger of collision energy will be absorbed prior to any deformations into occupied space.

As noted, the APTA Standard does recognize the need to address shaped-nosed designs and CEM designs. Specifically, the Standard provides that cab end collision posts and corner posts (and their supporting structure) on MU locomotives and cab cars without flat ends, or on equipment utilizing crash energy management designs, meet the ''severe deformation'' requirements, but that compliance with the requirements be demonstrated either through analysis or testing as agreed to by the vehicle builder and purchaser. See paragraph (e) in both sections 5.3.1.3.1, Cab-end collision posts, and 5.3.2.3.1, Cab end corner posts, of APTA Standard SS–C&S–034–99, Rev. 1. While FRA supports applying the ''severe deformation'' requirements to such designs, FRA does not believe it viable as a Federal regulation to have the application of these requirements essentially depend on an agreement between the vehicle builder and the purchaser of the vehicle-without the involvement of the Federal government or public input. In particular, since the ''severe deformation'' requirements were developed from research on typical flat-end cab cars and MU locomotives, FRA believes that there may be too much uncertainty for applying such requirements to other designs and that the industry would benefit from the inclusion of a more specific standard.

Within the Task Force, FRA proposed that a dynamic test standard be added to address the issue. However, as noted above, the Task Force could not reach consensus on a recommendation for such a dynamic standard. Concern was raised about the validity of any dynamic test standard chosen and whether such a standard could be used for valid comparisons with a quasi-static test standard. This concern included the need to first conduct full-scale testing on an actual prototype for a production design. Further, APTA was concerned that its member railroads might feel compelled to conduct both quasi-static and dynamic testing to demonstrate compliance, even if the regulations were expressly written to state that compliance with only one test standard would be required. FRA wishes to make clear that nothing in this proposal would require that both types of qualification procedures be used. Either may be clearly adequate for the purpose, depending on the technical challenge presented; and conducting two analyses or types of tests would clearly be excessive and wasteful. Again, FRA proposes two alternative methods in order to provide maximum flexibility,

recognizing that other-than-flat-nosed cars will be offered in the marketplace and further recognizing that equipment utilizing crush zones may also present difficulties should the quasi-static test be the only approach considered.

Concern was also raised as to the safety of conducting full-scale, dynamic testing. The technical tradeoffs between quasi-static and dynamic test standards are discussed in the Technical Background section of the preamble, above. FRA notes that there are safety concerns associated with both quasi-static and dynamic testing, and in a quasi-static test particular care must be taken due to the potential for the sudden release of stored energy should there be material failure. Proper planning and execution of each test are required. (By noting that caution must be exercised in planning and executing the tests, FRA does not intend in any way to oust the jurisdiction of the Occupational Safety and Health Administration of the U.S. Department of Labor with regard to the safety of employees performing the tests.)

FRA believes that dynamic test standards have been sufficiently validated and that dynamic testing should be included as an option for demonstrating compliance with the rule. For this reason, FRA is proposing that paragraph (c)(2) include an option for the dynamic testing of cab cars and MU locomotives. Although FRA expects that this method will be applied to designs with shaped-nose designs or with CEM designs, or both, it may also be used for a conventional flat-nosed design; and the quasi-static method may be applied to shaped-nose or CEM designs.

FRA recognizes that questions may arise in applying these methods in situations not clearly anticipated today. FRA requests comment on whether the final rule should include either an option or requirement that the test methodology be submitted for FRA review prior to the conduct of destructive testing. FRA also requests comment on whether and under what circumstances analysis and scale model or fixture testing might be accepted as satisfying the dynamic standard.

The dynamic standard itself is a performance standard involving impact with a proxy object. The proxy object must have a cylindrical shape, diameter of 48 inches, length of 36 inches, and minimum weight of 10,000 pounds. The longitudinal axis of the proxy object must be offset by 19 inches from the longitudinal axis of the cab car or MU locomotive, which must be ballasted to weigh a minimum of 100,000 pounds. At impact, the longitudinal axis of the proxy object must be 30 inches above the top of the finished floor. The cab car or MU locomotive and its end structure must withstand a 21 mph impact with the proxy object resulting in no more than 10 inches of intrusion longitudinally into the occupied area of the vehicle, and without separation of the attachments of any structural members. FRA is including a graphical description of this collision scenario as Figure 1 to subpart C.

FRA notes that in the Locomotive Crashworthiness final rule, the front-end structure requirements are principally stated in the form of performance criteria for given collision scenarios. *See* Appendix E to part 229; 71 FR 36915. In fact, the performance criteria in Appendix E to part 229 involve dynamic loading conditions stated in a way similar to what FRA is proposing here as the example to demonstrate compliance. In the Locomotive Crashworthiness final rule, FRA adopted performance criteria, rather than more prescriptive design standards, to allow for greater flexibility in the design of locomotives and better encourage innovation in locomotive designs. *See* 71 FR 36895–36898. Of course, the requirements proposed in paragraph (c)(2)(i) are a form of performance criteria. The distinction is that the performance criteria relate to quasi-static loading conditions—instead of dynamic loading conditions, which more approximate actual collision scenarios.

FRA also notes that recently adopted European standards, prEN 15227 FCD *Crashworthiness Requirements for Railway Vehicle Bodies,* include four collision scenarios. Collision Scenario 3 of the European standard involves a ''train unit front end impact with a heavy obstacle (e.g. lorry on road crossing).'' Commuter and intercity trains are required to be able to sustain an impact with a deformable object weighing 33 kips (15,000 kg) at 68 mph (110 kph). Calibration tests on components and numerical simulations of the scenario are recommended for showing compliance. Key differences between the European standard and the dynamic testing collision scenarios FRA is proposing to apply to both collision posts and corner posts, below, include the amount of energy involved and the character of the object. Assuming that the mass of the train is more than about 25 times greater than the mass of the object (which roughly corresponds to the mass of a commuter train made up of a cab car, four coaches, and a locomotive, or made up of six MU locomotives) then the total energy dissipated in a prEN 15227 Scenario 3-impact is 5.0 million foot-pounds. The total energy absorbed in the collision scenarios included in this NPRM are 135,000 foot-pounds for the collision post and 120,000 foot-pounds for the corner post. However, in the European standard, the impacted object is deformable and potentially absorbs a significant amount of the available energy; in the collision scenarios included in the NPRM, the impacted object is rigid and all of the energy is absorbed by the cab car or MU locomotive.

FRA invites comment on the proposal to provide for dynamic testing to demonstrate compliance by cab cars and MU locomotives. Specifically, FRA invites comment on the dynamic testing collision scenario included in the proposed rule for collision posts, and invites comment suggesting any alternative collision scenario or way to address such cab cars and MU locomotives.

Section 238.213 Corner posts

FRA is proposing to adopt the provisions of paragraph (a) through (d) of Section 5.3.2.3.1, Cab end corner posts, of APTA Standard SS–C&S–034–99 Rev. 1, and Section 5.3.2.3.3, Cab end-non-operator side of cab-alternate requirements. FRA is also proposing to modify these provisions for purposes of their adoption as a Federal regulation and to specify standards for a cab car or MU locomotive with a stairwell located on the side of the equipment opposite from where the locomotive engineer is situated. Together with the proposal for collision posts, this action would increase the strength of the front-end structure of cab cars and MU locomotives up to what the main structure can support, and also require explicit consideration of the behavior of the front-end structures when overloaded.

Overall, FRA is proposing to revise this section in its entirety by redesignating current paragraph (b) as paragraph (a)(2), making conforming changes to paragraph (a), and adding new paragraphs (b), (c), and (d).

Proposed paragraph (b) is intended to augment the current requirements of paragraph (a) for cab cars and MU locomotives ordered on or after October 1, 2009, or placed in service for the first time on or after October 2, 2011. Proposed paragraph (b) would require higher loads at the specified locations than its counterpart in paragraph (a).

Paragraph (b)(2) addresses alternative methods of demonstrating that the corner posts absorb energy while deforming. Proposed paragraph (b)(2)(i) sets forth quasi-static test requirements.

The corner post would have to be able to absorb a prescribed amount of energy without separation from its supporting structure. This proposed requirement is intended to provide a level of protection similar to the SOA design, as described in the Technical Background section of the preamble, above. A quasi-static test, similar to the test conducted by Bombardier on the M7, may be used to demonstrate compliance.

Proposed paragraph (b)(2)(ii) would provide for alternative dynamic qualification. The end structure would need to be capable of withstanding a frontal impact with a proxy object that is intended to approximate lading carried by a highway vehicle under the following conditions. The proxy object must have a cylindrical shape, diameter of 48 inches, length of 36 inches, and minimum weight of 10,000 pounds. The longitudinal axis of the proxy object must be aligned with the outboard edge of the side of the cab car or MU locomotive, which must be ballasted to weigh a minimum of 100,000 pounds. At impact, the longitudinal axis of the proxy object must be 30 inches above the top of the finished floor. The cab car or MU locomotive and its end structure must withstand a 20 mph impact with the proxy object resulting in no more than 10 inches of intrusion longitudinally into the occupied area of the cab car or MU locomotive, and without separation of the attachments of any structural members. FRA is including a graphical description of this collision scenario as Figure 2 to subpart C.

Paragraph (c) prescribes the corner post standards for cab cars and MU locomotives ordered on or after October 1, 2009, or placed in service for the first time on or after October 2, 2011, utilizing low-level passenger boarding on the side of the equipment opposite from where the locomotive engineer is seated. In this arrangement the non-operating side of the vehicle is protected by two corner posts (an end corner post and an internal adjacent body corner post) that are situated in front of occupied space and provide protection for the occupied space; the proposed rule allows for the combined contribution of both sets of corner posts to provide an equivalent level of protection to that required for corner posts in other cab car configurations.

Paragraph (c) would require that the corner post load requirements of paragraph (b) be met for the corner post on the operating side of the cab. The requirements for the two corner posts on the opposite side of the operator control stand are described in paragraphs (c)(1) and (2). The structural requirements for the end corner post are described in paragraph s (c)(1)(i) through (vii). The longitudinal load requirements for the end corner post as set forth in paragraph (c)(1) are as follows: (1)(i) is a 150,000-pound shear load applied at the base of the corner post with its connection with the underframe where the load must not exceed the shear strength of the post; (1)(ii) is a 30,000-pound bending load applied 18 inches above the top of underframe and no permanent deformation can occur; (1)(iii) is a 30,000-pound shear load applied at the attachment point with the roof structure, again without permanent deformations; and (1)(iv) is a 20,000-pound bending load applied anywhere between the underframe connection up to the roof structure connection without permanent deformation. The transverse load requirements for the end corner post are described in paragraph (c)(1) as follows: (1)(v) is a 300,000-pound shear load applied at a point even with the top of the underframe without exceeding the shear strength of the post or the carbody supporting structure; (1)(vi) is a 100,000-pound bending load applied 18 inches above the top of underframe and no permanent deformation can occur; and (1)(vii) is a 45,000-pound shear load at the connection between the corner post and the roof structure without deforming the post or the supporting structure. The higher magnitude loads applied in the longitudinal direction will result in a corner post that is wider than it is deep.

The structural load requirements for the body corner post are described in paragraphs (2)(i) through (vi). The longitudinal load requirements are as follows: (2)(i) is a 300,000-pound shear load applied at the base of the body corner post with its connection with the underframe where the load must not exceed the shear strength of the post; (2)(ii) is a 100,000-pound bending load applied 18 inches above the top of underframe and no permanent deformation can occur; (2)(iii) is a 45,000-pound bending load applied anywhere between the underframe connection up to the roof structure connection without permanent deformation. The transverse load requirements for the body corner post are described in paragraph (2) are as follows: (2)(iv) is a 100,000-pound shear load applied at a point even with the top of the underframe without exceeding the shear strength of the post or the carbody supporting structure; (2)(v) is a 30,000-pound bending load applied 18 inches above the top of underframe and no permanent deformation can occur; and (2)(vi) is a 20,000-pound shear load applied at the connection between the body corner post and the roof structure without deforming the post or the supporting structure. The higher magnitude loads applied in the transverse direction will result in a corner post that is deeper than it is wide.

FRA is also proposing that the combination of the corner post and the adjacent body corner post be capable of absorbing collision energy prior to or during structural deformation, as demonstrated by either a quasi static test or alternative dynamic qualification similar to the provisions set out for qualification under paragraph (b).

FRA notes that it is proposing different speeds and different points of contact for the dynamic testing alternatives given for collision post equivalents and corner post equivalents. The collision post equivalents are to be tested at 21 mph, and the corner post equivalents at 20 mph—a difference of about 10% in total energy involved. As the dynamic testing alternatives are intended to provide an equivalent level of safety, the higher speed for dynamically testing the collision posts reflects the more stringent quasi-static testing requirements for collision posts. The collision posts have more available space and a stronger support structure; hence, they can absorb more energy than the corner posts. Nevertheless, the proposed requirements for corner posts would more than double the amount of energy required for the posts to fail, when compared to current FRA requirements. Together, the proposed requirements for collision posts and corner posts would significantly enhance the performance of the posts in protecting occupants of cab cars and MU locomotives.

As noted above, FRA invites comment on the proposal to provide for dynamic testing to demonstrate compliance by cab cars and MU locomotives. Specifically, FRA invites comment on the dynamic testing collision scenario included in the proposed rule for corner posts, and invites comment suggesting any alternative collision scenario or way to address possible future designs. Moreover, FRA invites comment whether the final rule should provide for all cab cars and MU locomotives to be tested dynamically to demonstrate compliance—whether or not they have a shaped-nosed design or a CEM design—and, if so, whether the collision scenario included in the proposed rule is appropriate or whether another collision scenario would be.

Paragraph (d) would provide relief from utilization of a traditional end frame structure provided that an

equivalent level of protection is afforded by the components of the CEM system. In the FRA CEM design tested in March 2006, the end frame structure was reinforced in order to support the loads introduced through the deformable anti-climber. Significantly more energy was absorbed in the deformation of the deformable anti-climber than the combined requirements outlined for both collision and corner posts while preserving all space for the locomotive engineer and passengers. In the design under development for Metrolink in southern California, an equivalent end frame structure is placed outboard of occupied space with crush elements between the very end of the nose and the equivalent end frame. For a grade crossing collision above the underframe of the cab car it is expected that perhaps an order of magnitude or larger of collision energy will be absorbed prior to any deformations into occupied space.

Appendix A to Part 238—Schedule of Civil Penalties

Appendix A to part 238 contains a schedule of civil penalties for use in connection with this part. FRA may revise the schedule of civil penalties in issuing the final rule to reflect revisions made to part 238. Because such penalty schedules are statements of agency policy, notice and comment are not required prior to their issuance. *See* 5 U.S.C. 553(b)(3)(A). Nevertheless, commenters are invited to submit suggestions to FRA describing the types of actions or omissions for each proposed regulatory section that would subject a person to the assessment of a civil penalty. Commenters are also invited to recommend what penalties may be appropriate, based upon the relative seriousness of each type of violation.

FRA notes that in December 2006 it published proposed statements of agency policy that would amend the 25 schedules of civil penalties issued as appendixes to FRA's safety regulations, including part 238. *See* 71 FR 70589; Dec. 5, 2006. The proposed revisions are intended to reflect more accurately the safety risks associated with violations of the rail safety laws and regulations, as well as to make sure that the civil penalty amounts are consistent across all safety regulations. Although the schedules are statements of agency policy, and FRA has authority to issue the revisions without having to follow the notice and comment procedures of the Administrative Procedure Act, FRA has provided members and representatives of the general public an opportunity to comment on the proposed revisions before amending them. FRA is currently evaluating all of the comments received in preparing final statements of agency policy, and the schedule of civil penalties to part 238 may be revised as a result, independent of this rulemaking proceeding.

V. Regulatory Impact and Notices

A. Executive Order 12866 and DOT Regulatory Policies and Procedures

This proposed rule has been evaluated in accordance with existing policies and procedures, and it has been determined not to be significant under either Executive Order 12866 or DOT policies and procedures (44 FR 11034; Feb. 26, 1979). FRA has prepared and placed in the docket a regulatory evaluation addressing the economic impact of this proposed rule. Document inspection and copying facilities are available at the Docket Management Facility, U.S. Department of Transportation, 1200 New Jersey Avenue, SE., West Building Ground Floor, Room W12–140, Washington, DC 20590. Access to the docket may also be obtained electronically through the Web site for the DOT Docket Management System at *http://dms.dot.gov.* Photocopies may also be obtained by submitting a written request to the FRA Docket Clerk at Office of Chief Counsel, Stop 10, Federal Railroad Administration, 1120 Vermont Avenue, NW., Washington, DC 20590; please refer to Docket No. FRA–2006–25268. FRA invites comments on the regulatory evaluation.

The regulatory evaluation explains that the proposed requirements are based on industry standards, which every affected cab car or MU locomotive from currently producing manufacturers would now meet. Consequently, the proposed requirements are not expected to affect any units in production by current manufacturers, and are, therefore, estimated to have zero costs and benefits for such units. The proposed requirements would affect cab cars and MU locomotives from other potential manufacturers if those units were of a design which would not meet the proposed requirements. However, it is highly speculative whether any non-conforming cab car or MU locomotive would ever be produced, even in the absence of this proposal. Further, as discussed in detail above, States are preempted from imposing by regulation other, potentially conflicting, or more burdensome requirements.

Were any cab cars or MU locomotives to be affected by this proposal, the estimated benefits would be about $16,000 per cab car or MU locomotive, discounted at 7% over 20 years, and the estimated costs would be only about $2,000 per cab car or MU locomotive, also discounted at 7% over 20 years. Therefore, FRA estimates that the net benefit, discounted at 7% over 20 years, would be about $14,000 per such cab car or MU locomotive. However, because FRA believes that no units will be affected, FRA estimates that the present value of the total 20-year costs which the industry would be expected to incur to comply with the requirements proposed in this rule is zero, as is the anticipated benefits.

B. Regulatory Flexibility Act and Executive Order 13272

The Regulatory Flexibility Act (5 U.S.C. 601 *et seq.*) and Executive Order 13272 require a review of proposed and final rules to assess their impact on small entities. FRA has prepared and placed in the docket an Analysis of Impact on Small Entities (AISE) that assesses the small entity impact of this proposal. Document inspection and copying facilities are available at the Docket Management Facility, U.S. Department of Transportation, 1200 New Jersey Avenue, SE., West Building Ground Floor, Room W12–140, Washington, DC 20590. Docket material is also available for inspection on the Internet at *http://dms.dot.gov.* Photocopies may also be obtained by submitting a written request to the FRA Docket Clerk at Office of Chief Counsel, Stop 10, Federal Railroad Administration, 1120 Vermont Avenue, NW., Washington, DC 20590; please refer to Docket No. FRA–2006–25268.

The AISE developed in connection with this NPRM concludes that this proposed rule would not have a significant economic impact on a substantial number of small entities. The principal entities impacted by the rule would be governmental jurisdictions or transit authorities—none of which is small for purposes of the United States Small Business Administration (*i.e.*, no entity serves a locality with a population less than 50,000). These entities also receive Federal transportation funds. Although these entities are not small, the level of costs incurred by each entity should generally vary in proportion to either the size of the entity, or the extent to which the entity purchases newly manufactured passenger equipment, or both. Tourist, scenic, excursion, and historic passenger railroad operations would be exempt from the rule, and, therefore, these smaller operations would not incur any costs.

The rule would impact passenger car manufacturers. In general, these entities are principally large international corporations that would not be considered small entities. However, it is possible that a smaller entity, such as a small domestic manufacturer of rail cars, could be impacted if the requirements of the final rule do not provide sufficient flexibility for shaped-nosed MU locomotives and cab cars of the type it manufactures.

Having made these determinations, FRA certifies that this proposed rule is not expected to have a significant economic impact on a substantial number of small entities under the Regulatory Flexibility Act or Executive Order 13272.

C. Paperwork Reduction Act

FRA has analyzed the proposed rule in accordance with the Paperwork Reduction Act of 1995 (44 U.S.C. 3501 *et seq.*) to determine whether it would result in any new or additional information collection requirements. FRA has determined that no new or additional information collection requirements would result from the rule as proposed. FRA invites comment on this determination and whether the proposed rule would in fact result in any new or additional information collection requirements. Should any new or additional information collection requirements result from this rulemaking, FRA intends to obtain current Office of Management and Budget (OMB) control numbers for any such collection requirement prior to the effective date of a final rule. FRA is not authorized to impose a penalty on persons for violating information collection requirements which do not display a current OMB control number, if required.

D. Federalism Implications

FRA has analyzed this proposed rule in accordance with the principles and criteria contained in Executive Order 13132, issued on August 4, 1999, which directs Federal agencies to exercise great care in establishing policies that have federalism implications. *See* 64 FR 43255. This proposed rule would not have a substantial direct effect on the States, on the relationship between the national government and the States, or on the distribution of power and responsibilities among various levels of government.

FRA does note that it is clarifying the preemptive effect of this proposed rule and the underlying regulations it is proposing to amend. See the discussion of § 238.13, Preemptive effect, above. In particular, FRA believes that it has preempted any State law, regulation, or order, including State common law, concerning the operation of a cab car or MU locomotive as the leading unit of a passenger train. FRA has taken into account the federalism principles and criteria contained in Executive Order 13132 in making this determination.

One of the fundamental federalism principles, as stated in Section 2(a) of Executive Order 13132, is that ''[f]ederalism is rooted in the belief that issues that are not national in scope or significance are most appropriately addressed by the level of government closest to the people.'' Congress expressed its intent that there be national uniformity of regulation concerning railroad safety matters when it issued 49 U.S.C. 20106, which provides that all regulations prescribed by the Secretary with respect to railroad safety matters and the Secretary of Homeland Security with respect to railroad security matters preempt any State law, regulation, or order covering the same subject matter, except a provision necessary to eliminate or reduce an essentially local safety hazard that is not incompatible with a Federal law, regulation, or order and that does not unreasonably burden interstate commerce. This intent was expressed even more specifically in 49 U.S.C. 20133, which mandated that the Secretary of Transportation prescribe ''regulations establishing minimum standards for the safety of cars used by railroad carriers to transport passengers'' and consider such matters as ''the crashworthiness of the cars'' before prescribing the regulations. This proposed rule is intended to add to and enhance these regulations, originally issued on May 12, 1999, pursuant to 49 U.S.C. 20133.

Further, federalism concerns have been considered in the development of this NPRM both internally and through consultation within the RSAC forum, as described in Section II of this preamble, above. The full RSAC, which reached consensus on the proposal (with the exception discussed above concerning cab cars and MU locomotives without flat-ends or with CEM designs, or both) and then recommended it to FRA, has as permanent voting members two organizations representing State and local interests: AASHTO and ASRSM. As such, these State organizations concurred with the proposed requirements (again, with the exception noted above). The RSAC regularly provides recommendations to the FRA Administrator for solutions to regulatory issues that reflect significant input from its State members. To date, FRA has received no indication of concerns about the Federalism implications of this rulemaking from these representatives or from any other representative on the Committee.

For the foregoing reasons, FRA believes that this proposed rule is in accordance with the principles and criteria contained in Executive Order 13132.

E. Environmental Impact

FRA has evaluated this proposed regulation in accordance with its ''Procedures for Considering Environmental Impacts'' (FRA's Procedures) (64 FR 28545, May 26, 1999) as required by the National Environmental Policy Act (42 U.S.C. 4321 *et seq.*), other environmental statutes, Executive Orders, and related regulatory requirements. FRA has determined that this proposed regulation is not a major FRA action (requiring the preparation of an environmental impact statement or environmental assessment) because it is categorically excluded from detailed environmental review pursuant to section 4(c)(20) of FRA's Procedures. 64 FR 28547, May 26, 1999. In accordance with section 4(c) and (e) of FRA's Procedures, the agency has further concluded that no extraordinary circumstances exist with respect to this regulation that might trigger the need for a more detailed environmental review. As a result, FRA finds that this proposed regulation is not a major Federal action significantly affecting the quality of the human environment.

F. Unfunded Mandates Reform Act of 1995

Pursuant to Section 201 of the Unfunded Mandates Reform Act of 1995 (Pub. L. 104–4, 2 U.S.C. 1531), each Federal agency ''shall, unless otherwise prohibited by law, assess the effects of Federal regulatory actions on State, local, and tribal governments, and the private sector (other than to the extent that such regulations incorporate requirements specifically set forth in law).'' Section 202 of the Act (2 U.S.C. 1532) further requires that ''before promulgating any general notice of proposed rulemaking that is likely to result in the promulgation of any rule that includes any Federal mandate that may result in expenditure by State, local, and tribal governments, in the aggregate, or by the private sector, of $100,000,000 or more (adjusted annually for inflation)[currently $120,700,000] in any 1 year, and before promulgating any final rule for which a general notice of proposed rulemaking was published, the agency shall prepare a written statement'' detailing the effect

on State, local, and tribal governments and the private sector. The proposed rule would not result in the expenditure, in the aggregate, of $120,700,000 or more in any one year, and thus preparation of such a statement is not required.

G. Energy Impact

Executive Order 13211 requires Federal agencies to prepare a Statement of Energy Effects for any ''significant energy action.'' 66 FR 28355 (May 22, 2001). Under the Executive Order, a ''significant energy action'' is defined as any action by an agency (normally published in the **Federal Register**) that promulgates or is expected to lead to the promulgation of a final rule or regulation, including notices of inquiry, advance notices of proposed rulemaking, and notices of proposed rulemaking: (1)(i) That is a significant regulatory action under Executive Order 12866 or any successor order, and (ii) is likely to have a significant adverse effect on the supply, distribution, or use of energy; or (2) that is designated by the Administrator of the Office of Information and Regulatory Affairs as a significant energy action. FRA has evaluated this NPRM in accordance with Executive Order 13211. FRA has determined that this NPRM is not likely to have a significant adverse effect on the supply, distribution, or use of energy. Consequently, FRA has determined that this regulatory action is not a ''significant energy action'' within the meaning of Executive Order 13211.

H. Trade Impact

The Trade Agreements Act of 1979 (Pub. L. No. 96–39, 19 U.S.C. 2501 *et seq.*) prohibits Federal agencies from engaging in any standards or related activities that create unnecessary obstacles to the foreign commerce of the United States. Legitimate domestic objectives, such as safety, are not considered unnecessary obstacles. The statute also requires consideration of international standards and, where appropriate, that they be the basis for U.S. standards.

FRA has assessed the potential effect of this rulemaking on foreign commerce and believes that the proposed requirements are consistent with the Trade Agreements Act. The requirements proposed are safety standards, which, as noted, are not considered unnecessary obstacles to trade. Moreover, FRA has sought, to the extent practicable, to propose the requirements in terms of the performance desired, rather than in more narrow terms restricted to a particular design, so as not to limit alternative, compliant designs by any manufacturer—foreign or domestic.

For related discussion on the international effects of this part, please see the preamble to the May 12, 1999 Passenger Equipment Safety Standards final rule on the topic of ''United States international treaty obligations,'' 64 FR 25545.

I. Privacy Act

FRA wishes to inform all potential commenters that anyone is able to search the electronic form of all comments received into any agency docket by the name of the individual submitting the comment (or signing the comment, if submitted on behalf of an association, business, labor union, etc.). You may review DOT's complete Privacy Act Statement in the **Federal Register** published on April 11, 2000 (Volume 65, Number 70; Pages 19477–78) or you may visit *http://dms.dot.gov*.

List of Subjects in 49 CFR Part 238

Passenger equipment, Penalties, Railroad safety, Reporting and recordkeeping requirements.

The Proposed Rule

For the reasons discussed in the preamble, FRA proposes to amend part 238 of chapter II, subtitle B of Title 49, Code of Federal Regulations, as follows:

PART 238—[AMENDED]

1. The authority citation for part 238 continues to read as follows:

Authority: 49 U.S.C. 20103, 20107, 20133, 20141, 20302–20303, 20306, 20701–20702, 21301–21302, 21304; 28 U.S.C. 2461, note; and 49 CFR 1.49.

Subpart C—Specific Requirements for Tier I Passenger Equipment

2. Section 238.13 is revised to read as follows:

§ 238.13 Preemptive effect.

Under 49 U.S.C. 20106, issuance of these regulations preempts any State law, regulation, or order covering the same subject matter, except an additional or more stringent law, regulation or order that is necessary to eliminate or reduce an essentially local safety or security hazard; that is not incompatible with a law, regulation, or order of the United States Government; and that does not unreasonably burden interstate commerce.

3. Section 238.205 is amended by revising paragraph (a) to read:

§ 238.205 Anti-climbing mechanism.

Except as provided in paragraph (b) of this section, all passenger equipment placed in service for the first time on or after September 8, 2000 shall have at both the forward and rear ends an anti-climbing mechanism capable of resisting an upward or downward vertical force of 100,000 pounds without permanent deformation. When coupled together in any combination to join two vehicles, AAR Type H and Type F tight-lock couplers satisfy this requirement.

* * * * *

4. Section 238.211 is amended by revising the introductory text of paragraph (a), the introductory text of paragraph (b) and paragraph (b)(2), redesignating paragraph (c) as paragraph (d) and revising it, and by adding new paragraphs (c) and (e) to read as follows:

§ 238.211 Collision posts.

(a) Except as further specified in this paragraph and paragraphs (b) through (d) of this section—

* * * * *

(b) Each locomotive, including a cab car and an MU locomotive, ordered on or after September 8, 2000, or placed in service for the first time on or after September 9, 2002 (except a conventional locomotive manufactured on or after January 1, 2009, which shall be subject to the requirements of subpart D of part 229 of this chapter), shall have at its forward end, in lieu of the structural protection described in paragraph (a) of this section either:

(1) * * *

(2) An equivalent end structure that can withstand the sum of the forces that each collision post in paragraph (b)(1) of this section is required to withstand.

(c) Each cab car and MU locomotive ordered on or after October 1, 2009, or placed in service for the first time on or after October 2, 2011, shall have at its forward end, in lieu of the structural protection described in paragraphs (a) and (b) of this section, two forward collision posts, located at approximately the one-third points laterally, meeting the following requirements:

(1) Each collision post, with the supporting car body structure, shall be capable of withstanding the following loads individually applied at any angle within 15 degrees of the longitudinal axis:

(i) A 500,000-pound longitudinal force applied at the connection to the top of the underframe, without exceeding the ultimate strength of the post or supporting car body structure;

(ii) A 200,000-pound longitudinal force applied 30 inches above the connection of the post to the underframe, without exceeding the ultimate strength of the post or supporting car body structure; and

(iii) A 60,000-pound longitudinal force applied at any height along the post above the top of the underframe, without permanent deformation of the post or supporting car body structure; and

(2) Each collision post shall also be capable of absorbing collision energy prior to or during structural deformation, as demonstrated by one of the following methods:

(i) *Quasi-static method.* Each collision post shall be demonstrated to absorb a minimum of 135,000 ft-lbs (0.18 MJ) of energy when loaded longitudinally at a height of 30 inches above the connection of the post to the underframe, while not permanently deflecting more than 10 inches longitudinally. There shall be no complete separation of the post from its connections to the supporting structure; or

(ii) *Dynamic method.* The front end structure shall be demonstrated to be capable of withstanding a frontal impact with a proxy object that is intended to approximate lading carried by a highway vehicle under the following conditions:

(A) The proxy object shall have a cylindrical shape, diameter of 48 inches, length of 36 inches, and minimum weight of 10,000 pounds. The longitudinal axis of the proxy object shall be offset by 19 inches from the longitudinal axis of the cab car or MU locomotive, which shall be ballasted to weigh a minimum of 100,000 pounds. At impact, the longitudinal axis of the proxy object shall be 30 inches above the top of the finished floor; and

(B) The cab car or MU locomotive and its end structure must withstand a 21 mph impact with the proxy object resulting in no more than 10 inches of intrusion longitudinally into the occupied area of the vehicle, and without separation of the attachments of any structural members. (A graphical description of the frontal impact is provided in Figure 1 to subpart C.)

(d) The end structure requirements of this section apply only to the ends of a semi-permanently coupled consist of articulated units, provided that:

(1) The railroad submits to the FRA Associate Administrator for Safety under the procedures specified in § 238.21 a documented engineering analysis establishing that the articulated connection is capable of preventing disengagement and telescoping to the same extent as equipment satisfying the anti-climbing and collision post requirements contained in this subpart; and

(2) FRA finds the analysis persuasive.

(e) In the case of a cab car or MU locomotive designed to provide the benefits of crash energy management, the end structure requirements of this section are satisfied if the requirements of this section are met with respect to the portion of the car or MU locomotive outboard of the areas occupied by crew members and passengers.

5. Section 238.213 is revised to read as follows:

§ 238.213 Corner posts.

(a) Except as further specified in paragraphs (b) and (c) of this section, each passenger car and MU locomotive shall have at each end of the car, placed ahead of the occupied volume, two full-height corner posts capable of resisting:

(1)(i) A horizontal load of 150,000 pounds at the point of attachment to the underframe, without failure;

(ii) A horizontal load of 20,000 pounds at the point of attachment to the roof structure, without failure; and

(iii) A horizontal load of 30,000 pounds applied 18 inches above the top of the floor, without permanent deformation.

(2) For purposes of this paragraph (a), the orientation of the applied horizontal loads shall range from longitudinal inward to transverse inward.

(b) Except as provided in paragraph (c) of this section, each cab car and MU locomotive ordered on or after October 1, 2009, or placed in service for the first time on or after October 2, 2011, shall have at its forward end, in lieu of the structural protection described in paragraph (a) of this section, two corner posts ahead of the occupied volume, meeting the following requirements:

(1) Each post, with the supporting car body structure, shall be capable of withstanding the following loads individually applied toward the inside of the vehicle at all angles in the range from longitudinal to lateral:

(i) A 300,000-pound longitudinal force at the point even with the top of the underframe, without exceeding the ultimate strength of the post or supporting car body structure;

(ii) A 100,000-pound longitudinal force exerted 18 inches above the joint of the post to the underframe, without permanent deformation of the post or supporting car body structure; and

(iii) A 45,000-pound longitudinal force applied at any height along the post above the top of the underframe, without permanent deformation of the post or supporting car body structure; and

(2) Each corner post shall also be capable of absorbing collision energy prior to or during structural deformation, as demonstrated by one of the following methods:

(i) *Quasi-static method.* Each corner post shall be demonstrated to be capable of absorbing a minimum of 120,000 ft-lbs (O.16 MJ) of energy when loaded longitudinally at a height of 30 inches above the connection of the post to the underframe, while not permanently deflecting more than 10 inches longitudinally. There shall be no complete separation of the post from its connections to the supporting structure; or

(ii) *Dynamic method.* The front end structure shall be demonstrated to be capable of withstanding frontal impact with a proxy object that is intended to approximate lading carried by a highway vehicle under the following conditions:

(A) The proxy object shall have a cylindrical shape, diameter of 48 inches, length of 36 inches, and minimum weight of 10,000 pounds. The longitudinal axis of the proxy object shall be aligned with the outboard edge of the side of the cab car or MU locomotive, which shall be ballasted to weigh a minimum of 100,000 pounds. At impact, the longitudinal axis of the proxy object shall be 30 inches above the top of the finished floor; and

(B) The cab car or MU locomotive and its end structure must withstand a 20 mph impact with the proxy object resulting in no more than 10 inches of intrusion longitudinally into the occupied area of the cab car or MU locomotive, and without separation of the attachments of any structural members. (A graphical description of the frontal impact is provided in Figure 2 to subpart C.)

(c) Each cab car and MU locomotive ordered on or after October 1, 2009, or placed in service for the first time on or after October 2, 2011, utilizing low-level passenger boarding on the non-operating side of the cab end shall meet the corner post requirements of paragraph (b) of this section for the corner post on the side of the cab containing the control stand, and the following structural requirements for the corner post and the adjacent body corner post on the opposite side of the cab from the control stand:

(1) The corner post on the opposite side of the cab from the control stand, with the supporting car body structure, shall be capable of withstanding the following horizontal loads individually applied toward the inside of the vehicle:

(i) A 150,000-pound longitudinal force at the point even with the top of

the underframe, without exceeding the ultimate strength of the post or supporting car body structure;

(ii) A 30,000-pound longitudinal force at a point 18 inches above the top of the underframe, without permanent deformation;

(iii) A 30,000-pound longitudinal force at the point of attachment to the roof structure, without permanent deformation;

(iv) A 20,000-pound longitudinal force anywhere between the top of the post at its connection to the roof structure, and the top of the underframe, without permanent deformation of the post or supporting structure;

(v) A 300,000-pound transverse force at a point even with the top of the underframe, without exceeding the ultimate strength of the post or supporting car body structure;

(vi) A 100,000-pound transverse force at a point 18 inches above the top of the underframe, without permanent deformation; and

(vii) A 45,000-pound transverse force anywhere between the top of the post at its connection to the roof structure, and the top of the underframe, without permanent deformation of the post or supporting structure.

(2) The body corner post on the opposite side of the cab from the control stand, with the supporting car body structure, shall be capable of withstanding the following horizontal loads individually applied toward the inside of the vehicle:

(i) A 300,000-pound longitudinal force at a point even with the top of the underframe, without exceeding the ultimate strength of the post or supporting car body structure;

(ii) A 100,000-pound longitudinal force at a point 18 inches above the top of the underframe, without permanent deformation;

(iii) A 45,000-pound longitudinal force anywhere between the top of the post at its connection to the roof structure, and the top of the underframe, without permanent deformation or supporting structure;

(iv) A 100,000-pound transverse force at a point even with the top of the underframe, without exceeding the ultimate strength of the post or supporting car body structure;

(v) A 30,000-pound transverse force at a point 18 inches above the top of the underframe, without permanent deformation; and

(vi) A 20,000-pound transverse force anywhere between the top of the post at its connection to the roof structure, and the top of the underframe, without deformation of the post or supporting structure, and

(3) The combination of the corner post and the adjacent body corner post shall also be capable of absorbing collision energy prior to or during structural deformation, as demonstrated by one of the following methods:

(i) *Quasi-static method.* The two posts in combination shall be demonstrated to be capable of absorbing a minimum of 120,000 ft-lbs (O.16 MJ) of energy when loaded longitudinally at a height of 30 inches above the connection of the posts to the underframe, while not permanently deflecting the body corner post than 10 inches longitudinally. There shall be no complete separation of the body corner post from its connections to the supporting structure; or

(ii) *Dynamic method.* The front end structure on the non-operating side of the cab shall be demonstrated to be capable of withstanding frontal impact with a proxy object that is intended to approximate lading carried by a highway vehicle under the following conditions:

(A) The proxy object shall have a cylindrical shape, diameter of 48 inches, length of 36 inches, and minimum weight of 10,000 pounds. The longitudinal axis of the proxy object shall be aligned with the outboard edge of the side of the cab car or MU locomotive, which shall be ballasted to weigh a minimum of 100,000 pounds. At impact, the longitudinal axis of the proxy object shall be 30 inches above the top of the finished floor; and

(B) The cab car or MU locomotive and its end structure on the non-operating side of the cab must withstand a 20 mph impact with the proxy object resulting in no more than 10 inches of intrusion longitudinally into the occupied area of the cab car or MU locomotive, and without separation of the attachments of the body corner post. (A graphical description of the frontal impact is provided in Figure 3 to subpart C.)

(d) In the case of a cab car or MU locomotive designed to provide the benefits of crash energy management, the end structure requirements of this section are satisfied if the requirements of this section are met with respect to the portion of the cab car or MU locomotive outboard of the areas occupied by crew members and passengers.

6. Add Appendix to Subpart C of Part 238, consisting of figures 1, 2, and 3, to read as follows:

Appendix to Subpart C of Part 238

BILLING CODE 4910–06–P

FIGURE 1 TO SUBPART C OF PART 238–

SCHEMATIC OF DYNAMIC COLLISION POST PERFORMANCE STANDARD

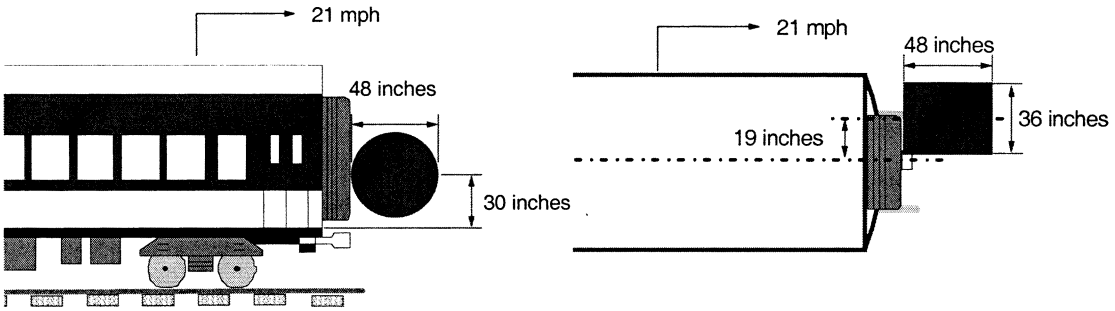

FIGURE 2 TO SUBPART C OF PART 238–

SCHEMATIC OF DYNAMIC CORNER POST PERFORMANCE STANDARD

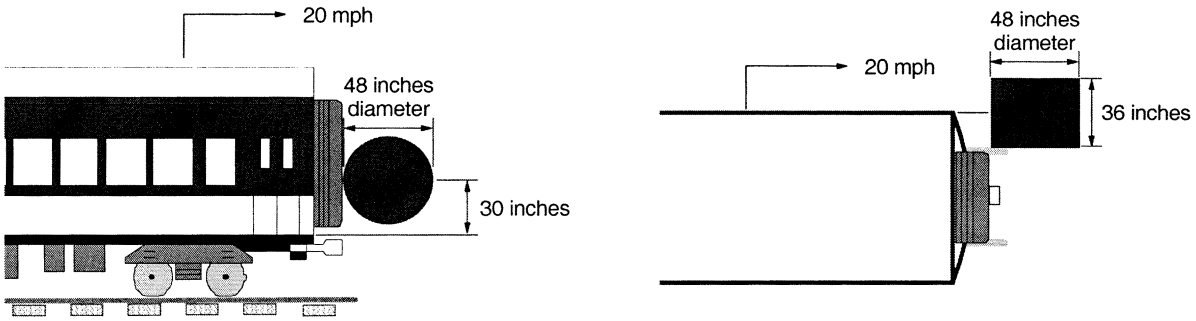

FIGURE 3 TO SUBPART C OF PART 238–

SCHEMATIC OF DYNAMIC CORNER POST PERFORMANCE STANDARD FOR CAB CARS AND MU LOCOMOTIVES UTILIZING LOW-LEVEL PASSENGER BOARDING ON THE NON-OPERATING SIDE OF THE CAB END

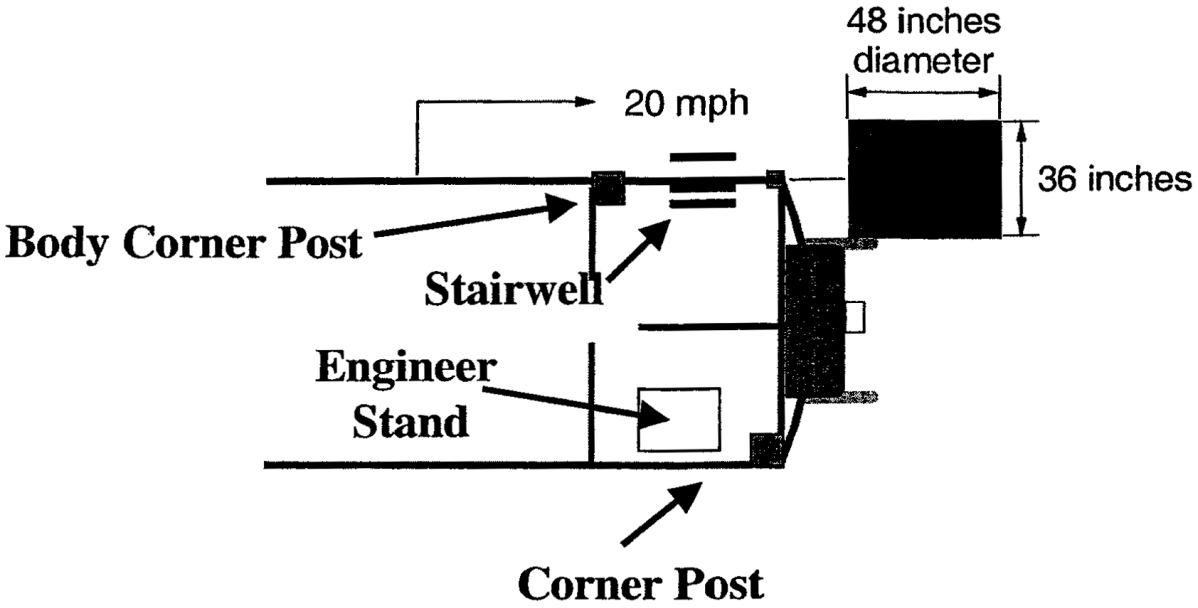

Issued in Washington, DC, on July 26, 2007.

Joseph H. Boardman,

Federal Railroad Administrator.

[FR Doc. 07–3736 Filed 7–31–07: 8:45 am]

BILLING CODE 4910–06–C