AUTHENTICATED
U.S. GOVERNMENT
INFORMATION
GPO

Federal Register

Friday,
October 19, 2007

# Part II

# Department of Housing and Urban Development

## 24 CFR Parts 3280 and 3285
## Model Manufactured Home Installation Standards; Final Rule

## DEPARTMENT OF HOUSING AND URBAN DEVELOPMENT

### 24 CFR Parts 3280 and 3285

**[Docket No. FR–4928–F–02]**

**RIN 2502–AI25**

## Model Manufactured Home Installation Standards

**AGENCY:** Office of the Assistant Secretary for Housing—Federal Housing Commissioner, HUD.

**ACTION:** Final rule.

**SUMMARY:** This final rule establishes new Model Manufactured Home Installation Standards (Model Installation Standards) for the installation of new manufactured homes and includes standards for the completion of certain aspects necessary to join all sections of multi-section homes. The National Manufactured Housing Construction and Safety Standards Act of 1974 requires HUD to develop and establish Model Installation Standards after receiving proposed installation standards from the Manufactured Housing Consensus Committee (MHCC). HUD received and reviewed the MHCC's recommended proposed model installation standards and published a proposed rule for public comment. Based on HUD's review of the comments that were submitted, including those from the MHCC, a number of revisions to the proposed rule have been made in this final rule. This final rule also incorporates certain amendments to definitions contained in the Manufactured Home Construction and Safety Standards (MHCSS) that are affected by definitions provided in the Model Installation Standards.

**DATES:** *Effective Date:* The effective date for this final rule will be October 20, 2008. The date of approval by the Director of the Federal Register for incorporation by reference of certain publications listed in this rule is October 20, 2008.

**FOR FURTHER INFORMATION CONTACT:** William W. Matchneer III, Associate Deputy Assistant Secretary for Regulatory Affairs and Manufactured Housing, Office of Manufactured Housing Programs, Department of Housing and Urban Development, 451 Seventh Street, SW., Room 9164, Washington, DC 20410; telephone number (202) 708–6401 (this is not a toll-free number). Hearing-or speech-impaired individuals may access this number through TTY by calling the toll-free Federal Information Relay Service at (800) 877–8339.

**SUPPLEMENTARY INFORMATION:**

### I. Background

On April 26, 2005, HUD published in the **Federal Register** at 70 FR 21498 a proposed rule that would establish Model Manufactured Home Installation Standards (Model Installation Standards) for new manufactured homes, as required by the National Manufacture Housing Construction and Safety Standards Act of 1974 (42 U.S.C. 5401–5426) (the Act). The Act gave the MHCC responsibility to develop and submit to the Secretary proposed Model Installation Standards. The MHCC's proposal was provided to HUD in September 2004. The Department agreed with most of the proposal, and thoroughly involved the MHCC in the process by which the proposed rule for the Model Installation Standards was developed prior to its publication in the **Federal Register**.

There were a total of 101 commenters on the April 26, 2005, proposed rule. Seventy-seven of the commenters were from the industry, including manufacturers, component suppliers, retailers, installers, realtors, trade associations, and community operators. Nineteen commenters came from the government, including HUD-approved Primary Inspection Agencies and State Administrative Agencies. Finally, four commenters were individual consumers and consumer groups and one was a private code organization.

Among the recommendations most often made by the commenters were: (1) To codify the Model Installation Standards in existing part 3280 rather than new part 3285, in the belief that the installation standards would thereby become ''preemptive'' of state and local installation standards; (2) to make the installation standards applicable to secondary or other subsequent installations of manufactured homes; (3) to include provisions assuring that HUD will consult with the MHCC on future changes to the installation standards; (4) that manufacturers' installation instructions be considered as evidence of compliance with the Model Installation Standards; (5) that the installation standards apply to the joining together and close-up of multi-section homes and to certain other aspects of on-site completion that HUD had originally treated as part of the construction process. HUD has given these subjects particular attention in preparing the final rule.

### II.A. Analysis of Public Comments—Part 3280

*Comment:* § 3280.302 Definitions. Two commenters wrote that the proposed definition of anchoring system should include forces on the foundation and anchorage systems, which may actually control the design in some instances.

*HUD Response:* The definition of anchoring system includes a reference to the forces that are required to be resisted by foundation and anchorage systems.

### II.B. Analysis of Public Comments—Part 3285

*Subpart A—General*

*Comment:* § 3285.1(a) Scope. The Model Installation Standards should be preemptive of state and local requirements.

*HUD Response:* HUD has concluded that a plain reading of Sections 604(d) and 605 of the Act indicates that Congress did not intend for these Model Installation Standards to be preemptive of more stringent state or local government requirements, only that they establish minimum national requirements for the installation of manufactured homes. This conclusion is strengthened by the statement from then-Chairman Jim Leach during his section-by-section comments on the floor of the House, that ''the bill would reinforce the proposition that installation standards and regulations remain under the exclusive authority of each state.'' (Dec. 5, 2000, 146 Cong. Rec. H11987). In earlier floor remarks, then-Ranking Member John LaFalce said, ''States that wish to have their own installation standards may continue to do so, as long as they provide protections comparable to the model standards.'' (Oct. 24, 2000, 146 Cong. Rec. H10685). HUD therefore believes that Congress has permitted any state that chooses to operate its own installation program to enforce installation standards more stringent than these Model Installation Standards, provided that those standards otherwise offer protection that equals or exceeds the minimum protection established by these Model Installation Standards.

*Comment:* § 3285.1(a) Scope. The Model Installation Standards should be codified under 24 CFR part 3280, Manufactured Home Construction and Safety Standards.

*HUD Response:* Contrary to the views expressed by some commenters, preemption authority can only come from Congress, and no decision that HUD could make regarding the codification of these Model Installation Standards could increase or diminish that authority. However, as indicated above, HUD believes there is good reason to conclude that Congress did

not intend to extend preemption authority to these Model Installation Standards.

In any event, HUD has chosen, as a matter of administrative necessity, to codify these Model Installation Standards, as in new part 3285 of 24 CFR, in order to maintain the clear distinctions the Act makes between installation and construction. The regulatory structure that Congress has given HUD for enforcement of these Model Installation Standards is entirely different from the enforcement authority it previously gave HUD for the federal MHCSS. As HUD reads the Act, section 613 (42 U.S.C. 5412) and section 615 (42 U.S.C. 5414), the principal sections requiring notification and correction of defects, do not apply to these Model Installation Standards. As HUD reads the Act, the primary enforcement authority for these Model Installation Standards is instead limited to section 605 (42 U.S.C. 5404) itself, which not only provides more limited authority for these Model Installation Standards, but also adds entirely new requirements regarding the licensing and training of installers.

Given these fundamental differences between the installation and construction and safety programs, publication of these Model Installation Standards in new part 3285 of 24 CFR will best allow HUD to maintain the regulatory separation necessary to administer two such different programs.

*Comment:* § 3285.1(a) Scope. Work associated with the joining together and close-up of sections of multi-section homes and certain aspects of on-site completion should be considered as installation of the home and not as construction.

*HUD Response:* Under the final rule, work necessary to join sections of a multi-section home, such as work identified in Subparts G, H, and I of the installation standards, and work associated with connecting exterior lights, ceiling-hung light fixtures, or fans, as identified in Subpart I, are treated as installation, and therefore is subject to these Model Installation Standards and any future requirements of the installation program regulations. Accordingly, close-up work completed on-site would require inspection under the Manufactured Home Installation Program Proposed Rule published in the **Federal Register** on June 14, 2006. However, features such as penetrated hinged roofs, high-pitched hinged roofs, and eave construction will remain subject to the MHCSS and the Procedural and Enforcement Regulations in 24 CFR part 3282.

In early drafts of these Model Installation Standards, HUD treated all activities associated with close-up as part of construction of the home and, as such, subject to the MHCSS and the manufacturer's certification label. However, HUD recognizes that installers, not manufacturers, typically perform close-up work. Therefore, HUD has concluded that the Model Installation Standards provide the best opportunity to address close-up activities and concerns.

Further, under the final rule, home purchasers generally will look to installers or retailers who often employ or contract with installers to perform home installations, to remedy close-up problems that are not the result of inadequate or incorrect manufacturer instructions or of production errors that have resulted in the sections of the home not fitting together properly.

*Comment:* § 3285.1(a) Scope. Compliance with the Manufacturer's Installation Instructions should be accepted as compliance with the Model Installation Standards. Several commenters also recommended the section be rewritten as follows: ''The manufacturer's installation instructions shall apply under any of the following conditions where they do not take the home out of compliance with the Federal Manufactured Housing Construction and Safety Standards: (1) To items not covered by this standard; (2) Where the manufacturer's approved installation instructions provide a specific method of performing a specific operation or assembly; (3) Where the manufacturer's approved instructions exceed this standard.''

*HUD Response:* § 3285.1(a) of the final rule recognizes that the Model Installation standards serve as the basis for the manufacturer's installation instructions and accepts those instructions for compliance, as long as they meet or exceed the minimum requirements of the Model Installation Standards and do not take the home out of compliance with the MHCSS. However, the methods for performing operations that are included in a manufacturer's installation instructions will be enforced by the Department, in their entirety.

Furthermore, the final rule requires that manufactured home manufacturers include installation instructions with each new home. The instructions must be approved by a Design Approval Primary Inspection Agency (DAPIA) and must provide protection to the residents of manufactured homes that equals or exceeds the protections provided by the Model Installation Standards.

*Comment:* § 3285.1(a) Scope. The Model Installation Standards should be applicable to subsequent installations beyond the initial siting and placement of the manufactured home.

*HUD Response:* It is HUD's position that Congress intended the installation standards to be applicable only to the initial installation of new manufactured homes, as indicated by references in Section 623(g) of the Act to the date of installation and by the definition of ''purchaser'' as the first purchaser in Section 603 of the Act. A very small percentage of manufactured homes are ever relocated after the initial siting and placement of the homes. The Manufactured Home Procedural and Enforcement Regulations encourage states to establish procedures for the inspection of used manufactured homes and for monitoring of the installation of manufactured homes within each state (§ 3282.303), thus indicating the regulations' intent to place the supervision of re-installments in the hands of the states.

The final rule does not prevent state and local governments from enforcing standards for installations after the initial installation or from imposing higher installation standards than are required by HUD's ''minimum'' Model Installation Standards for the initial or any subsequent installation of a manufactured home. State standards for initial installation must meet or exceed HUD's minimum installation standards, while state standards for secondary installations do not have to adhere to the minimum HUD standards. HUD continues to believe that any subsequent installation of a manufactured home best resides with state authority. Notwithstanding all of the above, HUD will continue to study this issue in developing the final rule for its installation program regulations.

*Comment:* § 3285.1(c) Consultation With the Manufactured Housing Consensus Committee. The Manufactured Housing Consensus Committee (MHCC) should have a continuing involvement in revising the installation standards.

*HUD Response:* HUD agrees with comments received from the MHCC and others that the Committee should have a continuing role in reviewing and recommending future changes to the Model Installation Standards. HUD recognizes the valuable guidance and assistance provided by the MHCC throughout the rulemaking process with the development of these installation standards. Accordingly, a new section, § 3285.1(c), ''Consultation with the Manufactured Housing Consensus Committee,'' has been included in the

final rule. That section provides that HUD will afford the MHCC with a 120-day opportunity to offer input and comment prior to proposing any changes to the installation standards. The new provisions also direct the MHCC to send its own suggested changes to the Department at least every 2 years. The final rule also provides that HUD will accept, modify, or reject each recommendation and explain to the MHCC the reasons behind any modifications or rejections of those recommendations before publication of any new revised standard.

*Comment:* 3285.1(d) Administration. One commenter wrote that certain permanent site-built foundations with manufacturer certification are not subject to the proposed rule. This recognizes that site-built foundations under state and local codes are suitable and that all localities have such codes. It also implies that state and local codes for non-permanent foundations are lacking and that HUD needs to intervene. This does not make sense, unless there is a significant difference between permanent and non-permanent foundation requirements and their administration and enforcement.

*HUD Response:* This provision stems from Section 604(f) of the Act and 24 CFR part 3282.12 of the Manufactured Home Procedural and Enforcement Regulations, which require HUD to exclude from coverage any structure which, among other things, is designed to be erected and installed upon a site-built permanent foundation.

*Comment:* §§ 3285.2, 3285.301(b), 3285.401 HUD Question: Should the Model Installation Standards offer more performance-based equivalents instead of prescriptive requirements to facilitate the use of alternative installation methods?

*HUD Response:* Based on the recommendations of the MHCC and the public comments, the final model installation standards are a combination of prescriptive and performance standards. While the minimum standards do offer prescriptive methods for compliance, they also provide for alternatives in design that will allow for innovation. Accordingly, manufacturers' instructions may be based on either the minimum requirements in these model installation standards or may use performance-based design in demonstrating compliance with these standards.

*Comment:* § 3285.2 Manufactured Installation Instructions/HUD Question. Should model-specific plans for installation be required and, if so, what minimum information should be required on the plans (i.e., pier capacities, minimum support and anchorage locations, other structural design requirements, plan-specific information for completion of utility systems, etc.)?

*Comment:* This should be left up to each manufacturer to decide.

*Comment:* There is no need to require model-specific home plan criteria for every conceivable single or multi-section home design as there must be some reliance on the manufacturer's installation manual for model-specific home designs as the model standard is the minimum necessary requirements.

*Comment:* There is no need to require model-specific plan criteria for every conceivable floor plan and design under the Model Installation Standards. If there needs to be specialized criteria, the manufacturer can provide it in the installation manual that comes with the new home. The DAPIA will determine whether the specialized manufacturer's manual has met or exceeds the Model Installation Standards. With regard to § 3285.403, the best alternative might be to permit the mating line anchorage/connection to be determined by the manufacturer's installation manual.

*HUD Response:* HUD has decided that model-specific foundation plans are not required, but that special foundation and anchorage plans are required to address site-specific conditions or when the support and anchorage methods in the manufacturer's installation instructions are not suitable and vary from those included with the manufacturer's installation instructions.

*Comment:* § 3285.2 Manufactured Installation Instructions/HUD Question. Should the manufacturer's installation instructions provide that a professional engineer or registered architect must be consulted when general site conditions are not covered by the installation instructions?

*Comment:* When instructions do not address specific site conditions and hazards, the foundations and anchorage should be designed by a professional engineer or registered architect.

*Comment:* There is no reason for the Model Installation Standards to require that a professional engineer or architect be consulted for site preparation, if the manufacturer's manual does not cover this installation consideration. Such a requirement could substantially raise the cost of site preparation for the retailer/installer.

*Comment:* It is not reasonable to expect the manufacturer to effectively give installation instructions and assume liability when they have no site-specific knowledge. ''A registered engineer is the right call.''

*Comment:* The only way to get efficient and consistent installation compliance with both the Model Installation Standards and the manufacturer's support requirements is to require manufacturers to take responsibility for the vertical support of their own designs and to provide foundation plans with all pier locations and minimum pad sizes specified and drawn to scale, in a graphical format serviceable for both the permit process and the foundation layout at the jobsite.

*Comment:* All engineered foundations should be designed per SEI/ASCE 7, Loads for Buildings and Other Structures. This will allow engineers and architects to develop foundation designs that are capable of resisting all natural hazards at the site.

*Comment:* Experience has shown that out-of-state registered professional engineers and architects unfamiliar with the conditions of the locality design foundation systems that fail, and that the engineer or architect should be registered in the state where the home is to be installed.

*HUD Response:* Section 3285.2(c) of the final rule has been revised specifically to allow for variations to be made to installation instructions for site conditions that are not covered, provided that installers first attempt to obtain those variations for site-specific conditions from the manufacturer and, if not available from the manufacturer, the installer is to use designs prepared by a professional engineer or registered architect. The installer must have the professional engineer's or registered architect's design approved by the manufacturer and its DAPIA prior to installation. DAPIA approval is necessary to enable HUD to enforce such modifications to the manufacturer's installation instructions. HUD has determined that the Model Installation Standards do not need to require that professional engineers or registered architects be licensed in the state where the home is to be installed, since they are responsible for only performing work or preparing designs in areas of construction in which they are competent and knowledgeable. However, a state that operates its own installation program may require that the engineer or architect be specifically licensed by that state.

*Comment:* HUD requested comments on the efforts associated with checking installation instructions. One commenter wrote that since installation instructions vary by manufacturer and model, the estimates of number of respondents and responses per respondent were very low, while the number of hours spent on review was

high, unless the time includes back-and-forth communication. If HUD does not intend to take action to ensure conformity with the Model Installation Standards (MIS), there is no need to collect this data.

*HUD Response:* This issue will be addressed under the installation program regulations and any adjustments to the burden estimates will be made as part of those regulations.

*Comment:* Section 3285.4 Incorporation by Reference. There is a more recent edition of the American Society of Heating, Refrigerating and Air-Conditioning Engineers Fundamentals Handbook and the Underwriters' Laboratories (UL) 181 standard has been separated into UL 181, 181A, and 181B.

*Comment:* Add the American Wood Preservers Association (AWPA) to the list of Referenced Publications. AWPA Publications, American Wood-Preservers' Association, P.O. Box 388, Selma, AL 36702. AWPA U1–04, Use Category System: User Specification for Treated Wood, 2004, and AWPA M4–02, Standard for the Care of Preservative-Treated Wood Products, 2002. The references to treated wood standards need to be updated because: (1) AWPA C2 and C9 are no longer updated by AWPA and will not include new preservative treatments that are appropriate for this application; (2) Standard U1 is currently referenced in the 2004 amendments to the 2003 International Building Code (IBC) and International Residential Code (IRC) in place of standards C2 and C9 and will be referenced in the 2006 editions; and (3) the 0.60 lbs. per cubic foot is not the required retention level for all of the appropriate preservatives. Copper azole (CA–B) has a required retention of 0.31 lbs. per cubic foot for this application that is equivalent to Chromated Copper Arsenate used at 0.60 lbs. per cubic foot.

*HUD Response:* The editions of these standards that are adopted in this final rule are consistent with those recently updated by HUD in recent amendments to the Manufactured Home Construction and Safety Standards. HUD will consider issuing conforming amendments to more recent editions of these standards in future rulemaking.

HUD also agrees there is a need to update and revise the reference requirements for treated wood materials, and the final rule incorporates the more recent AWPA U1–04 and AWPA M4–02 standards into certain sections of the installation standards (§§ 3285.4, 3285.303, 3285.312, and 3285.504).

*Comment:* § 3285.5 Definitions. ''Design Flood.'' The term ''design flood'' is used several times in the proposed rule and should be defined as the greater of either: (1) The base flood or (2) the flood so designated by the Local Authority Having Jurisdiction (LAHJ) as its regulatory flood, with a one percent chance or less of being equaled or exceeded in any given year.

*Comment:* The term ''design flood elevation'' (DFE) should be added to the definitions as follows: ''Design Flood Elevation. The elevation of the design flood, including wave height, relative to the datum specified on a LAHJ's hazard map.''

*Comment:* § 3285.5 Definitions. ''Lowest-Floor.'' The definition of Lowest Floor should be revised, as follows: ''Lowest floor. The floor of the lowest enclosed area of a manufactured home. For flood-resistant design purposes of these MIS, the term ''lowest floor'' shall mean the bottom of the longitudinal chassis frame beam in A zones, and the bottom of the lowest horizontal structural member supporting the home in V zones. An unfinished or flood resistant enclosure, used solely for vehicle parking, home access, or limited storage, must not be considered the lowest floor, provided the enclosed area is not constructed so as to render the home in violation of the flood related provisions of this standard.''

*HUD Response:* Section 3285.102 of the final rule clarifies that the above terms are used as defined in 44 CFR part 59.1 of the National Flood Insurance Program and, as such, are not required to be again defined in these installation standards.

*Comment:* § 3285.5 Definitions. ''Labeled'' and ''Listed or certified.'' The term ''labeled'' is very similar to the term ''listed or certified,'' except that ''listed or certified'' requires that an approved product be on a published list. All of these terms could be read to require the contracting of an agency on a continuing basis to maintain product approval status rather than using a nationally recognized third-party testing agency for a one-time approval.

*HUD Response:* Both terms remain in the final rule because certain components may not be required to be labeled but must still be listed under the purview of a nationally recognized testing laboratory.

*Comment:* § 3285.5 Definitions. ''Crossovers.'' The definition of crossovers should be amended to include ducting for both heating and cooling ducting, and not just ducting for heating.

*HUD Response:* As recommended by the commenters, the final rule includes both heating and cooling ducts in the definition of ''crossovers.''

*Comment:* § 3285.5 Definitions. ''Local Authority Having Jurisdiction (LAHJ).'' The definition of LAHJ should be rewritten to refer to local responsibilities in such a way that if they are within the coverage of the Model Installation Standards (MIS) they are applicable, but if outside the MIS they are not applicable.

*Comment:* Having states included within the definition of an LAHJ seems to conflict with other provisions of the rule and means that a state or local government entity that does not have such requirements, even though they may be identical to the MIS, would not be considered an LAHJ. One commenter wrote that no level of government below the state level should be included in the definition of an LAHJ, because it implies that lower levels of government's programs are sanctioned, which could result in the imposition of additional fees, thereby causing increased costs for consumers.

*HUD Response:* The definition is essentially unchanged in the final rule because any entity or subdivision of state government is not restricted from establishing more stringent requirements than those in the MIS for states in which HUD will operate the installation program. The proposed rule for the installation program regulations in 24 CFR part 3286 includes detailed provisions for state-run installation programs and how those requirements will impact on local governmental entities within their state. However, the definition has been modified in the final rule to clarify that an LAHJ must have both responsibilities and requirements that must be complied with during the installation of a manufactured home.

*Comment:* § 3285.5 Definitions. ''State.'' The ''Canal Zone'' should be deleted from the definition of ''State,'' because the Panama Canal Zone has not been under United States control or jurisdiction for nearly 30 years. emsp;

*HUD Response:* HUD has removed ''the Canal Zone'' from the definition of ''State,'' but recognizes that the statute has not been amended or updated to reflect this change.

*Comment:* § 3285.5 Definitions. ''Foundation.'' The term ''foundation'' should be a defined term in the MIS.

*HUD Response:* A definition for a ''foundation system'' has been included in the final rule in both the Manufactured Home Construction and Safety Standards and the MIS.

*Subpart B—Pre-Installation Considerations*

*Comment:* Seismic Safety/HUD Question: Should the MIS attempt to set forth minimum installation

requirements or pre-installation considerations to address seismic safety? If so, how should HUD establish seismic zones and what minimum requirements would be included in the Model Installation Standards?

*Comment:* If seismic zones are to be considered in the future as a manufactured home design parameter, it is best that they first be introduced into part 3280 and then mentioned in set-up manuals.

*Comment:* Part 3285 contains no criteria to protect homes from earthquakes, and this omission makes the standard incomplete. Other national consensus standards have seismic criteria, such as the IBC, the IRC, the National Fire Protection Association (NFPA) 5000 Building Construction and Safety Code, and the NFPA 225. Manufactured homes fall off this type of support at very moderate ground shaking levels, since such homes are typically installed using piers not designated for seismic resistance, which are not adequately attached and connected to the foundation and chassis of the home. This lack of seismic resistant provisions will result in significantly less protection than in other types of residential construction, and is technically inadequate in areas of high seismic activity. Congress authorized the Earthquake Hazard Reductions Program to develop seismic safety provisions suitable for use throughout the United States. The lack of seismic provisions is contrary to national policy. The approach for seismic detailing and design in NFPA 225 should be accepted and used in part 3285.

*Comment:* HUD should not include any seismic requirements in the Model Installation Standards. When required, designs are handled by the retailer, the installer, the owner, or the manufacturer, in accordance with the requirements of the local building authority. This is working now and need not be covered in the installation standards.

*HUD Response:* The final rule does not contain specific requirements for the design of foundation and anchorage systems in seismically active areas. This will allow states and local building code authorities in seismically active areas to establish or continue to enforce foundation and anchoring requirements for seismic design load considerations. However, HUD intends to continue to study this issue and may recommend requirements for seismic design in future rulemakings in the Manufactured Home Construction and Safety Standards and the Model Installation Standards.

*Comment:* § 3285.101 Installation of Manufactured Homes in Flood Hazard Areas. The requirements for installation of manufactured homes in flood hazard areas should be included in Subpart D Foundations, § 3285.302, rather than in § 3285.101(d). While § 3285.101 requires the installer to determine if flood hazards affect the site, it is more appropriate that more explicit design considerations be articulated in the section on foundations.

*Comment:* States and communities in areas that are vulnerable to flood damage should adopt regulations that exceed the minimum National Flood Insurance Program (NFIP) requirements.

*Comment:* The approach indicated in the proposed Model Installation Standards was considered and rejected by NFPA 225. Basic performance requirements related to floods can and must be included in the Model Installation Standards, and doing so will not conflict with, replace, or preempt NFIP and LAHJ flood requirements.

*Comment:* Method and Practices. Manufactured homes located wholly or partly within special flood hazard areas must be installed using methods and practices that minimize flood damage during the base flood, including elevation and stability of the foundation for anticipated conditions and loads in accordance with the LAHJ; 44 CFR 60.3(a) through (e), as applicable; and other provisions of 44 CFR referenced by those paragraphs.

*Comment:* Section 3285.101(c) should be revised to read as follows: ''(c) Pre-installation considerations. Prior to the initial installation of a new manufactured home, the installer is responsible to determine whether the manufactured home site lies wholly or partly within a special flood hazard area as shown on the LAHJ's Flood Insurance Rate Map, Flood Boundary and Floodway Map, or Flood Hazard Boundary Map. If so located, the map and supporting studies and requirements adopted by the LAHJ or state should be used to determine the flood hazard zone and design flood elevation at the site. If the LAHJ has not adopted a Flood Hazard Map, the installer shall consult the LAHJ to determine flood-resistant installation requirements.''

*Comment:* § 3285.101(d) Installation of Manufactured Homes in Flood Hazard Areas. LAHJs should be given the option to enforce requirements for flood hazards at whatever level they deem necessary. The section should provide two options for flood hazard criteria: (1) Per the LAHJ or (2) per the NFIP regulations.

*Comment:* Paragraph (d)(2) should be renumbered as (d)(3) and a new section (d)(2) should be added, as follows: ''Performance requirements. Manufactured home installations shall: (a) Have the lowest floor elevated to or above the design installation; (b) elevate the home using support and anchorage systems designed and constructed to resist design flood loads in combination with other storage loads; (c) construct the support and anchorage system with flood damage resistant materials; (d) in A zones, use flood openings in permanent foundation walls and in other solid walls (excluding skirting) forming an enclosure below the DFE, to allow the automatic equalization of flood levels; and (e) in V zones, elevate the home on piles, columns, piers, or stands that minimize obstructions below the DFE, and use breakaway construction for any other non-structural walls or elements.''

*Comment:* Fill is often used as a method to elevate sites so that the lowest floors of manufactured homes are elevated to or above the design flood elevation. While compaction of fill used to elevate a manufactured home site is an important consideration, there are other particular considerations that are important so that flood conditions do not adversely affect the fill. In particular, it is recommended that the fill be sloped and protected with vegetation to minimize erosion that may undermine the home. This can be accomplished by adding § 3285.101(d)(2) to read as follows: ''Installation on fill. Fill placed in flood hazard areas in order to elevate manufactured home sites shall be placed, compacted, and sloped to minimize shifting, slumping, and erosion during the rise and fall of floodwater.''

*Comment:* A new paragraph, § 3285.101(e), should be added to read as follows: ''Alternate Flood-Resistant Installation Provisions. The flood-resistant installation provisions contained in NFPA 225 shall be deemed to equal or exceed the flood requirements of the Model Installation Standards.''

*Comment:* The only way to prevent flood damage is by elevating the home above the flood level on strong and durable stabilizing devices. Performance requirements to prevent flood damage must be included if the Model Installation Standards are to be effective.

*HUD Response:* The final rule continues to reference the provisions of 44 CFR 60.3(a) through (e) and Federal Emergency Management Agency (FEMA) 85, Manufactured Home

Installation in Flood Hazard Areas, as appropriate guidance for installation of manufactured homes in areas subject to flooding. A state or local community may adopt more stringent performance requirements than those specified under the Model Installation Standards for flood hazard areas.

*Comment:* § 3285.102 Design Zone Maps. The design and construction of the foundation and anchoring systems addressed in part 3285 should be compatible with the design and construction of the home, but should not be restricted or limited by the outdated and obsolete design zone maps contained in part 3280.

*Comment:* This section should require that a manufactured home cannot be installed in a higher wind zone, snow load, or thermal zone than the home's original design for its initial installation.

*Comment:* The referenced design maps identified in part 3280 should be included in this section.

*HUD Response:* Section 3285.103(a) of the final rule requires that prior to the initial installation of a new manufactured home, the installer verify that the design and construction of the home, as indicated on the design zone maps provided with the home required by the Manufactured Home Construction and Safety Standards and regulations, are suitable for the site location where the home is to be installed.

*Subpart C—Site Preparation*

§ 3285.201 Soil Conditions/HUD Question. HUD sought comment on whether the standards should require that a minimum of six inches of soil, including the organic material, be removed under load bearing footings to ensure that footings are placed on undisturbed soil for at-grade footings.

*Comment:* This would seem like a good practice in general to avoid detrimental effects to foundation support and anchoring systems; however, to specify a minimum depth of six inches of soil be removed may in some cases be too little or in other situations too excessive. To address this concern, the commenters recommend that the section be revised to indicate that topsoil is to be removed or that at-grade footings should be installed on undisturbed soil.

*HUD Response:* HUD finds the comment to be reasonable, and the final rule does not specify a required depth of soil removal, thereby leaving the determination of firm, undisturbed soil as a site-specific matter.

*Comment:* § 3285.202 Soil Classifications and Bearing Capacity. The pocket penetrometer should be included as an acceptable method to determine soil-bearing capacity. While penetrometers are not as precise a method for determining soil-bearing capacity at an individual location, they have proven to be workable devices where multiple readings are taken at an installation site.

*Comment:* The proposed rule should offer a default approach to determine the soil bearing capacity such as permitted by other model codes. This default approach used in some state and model building codes, such as the 2003 International Residential Code, generally recognizes a minimum soil bearing capacity of 1500 pounds per square foot (psf).

*HUD Response:* The final rule now allows the use of the pocket penetrometer as one of the acceptable methods for determining soil classification and bearing capacity and permits the use of a 1500 psf soil bearing capacity, unless site-specific information requires the use of lower values based on soil classification and type.

*Comment:* § 3285.203(a) Drainage. The section should be revised to read as follows: ''Drainage must be provided to direct surface water away from the home.'' This was suggested because the commenter believed it unnecessary to include a ''laundry list'' of possible problems, if proper drainage was not provided, that was identified in the proposed rule.

*Comment:* As written, subsection (b) would be impossible to enforce within rental communities given their layout and design. The requirement should be revised to provide an exemption for homes sited within manufactured home rental communities, or by changing the drainage requirement ''from under'' to ''away from'' the home. Further, in subsection (c) the first 10-foot provision would be impossible to enforce in rental communities, since lots only provide for 5-foot sideyards and that the requirement should be revised to require drainage away from the foundation of the home for the first 5 feet.

*HUD Response:* The final rule has been revised to clarify that surface water must be directed away from the home to prevent water build-up under the home. Where property lines do not allow the drainage to be diverted for the first 10 feet from the foundation, other methods are allowed to remove the surface water. However, statements on the adverse affects of not removing the water have been removed from this section, as suggested by commenters.

*Comment:* § 3285.203(f) Gutters and Downspouts. Most home manufacturers do not provide additional support in the roof system in order to support gutters and downspouts. Installation could cause damage and take the home out of compliance with the MHCSS. However, if gutters and downspouts are provided, the runoff must be directed away from the manufactured home.

*Comment:* Even though the Model Installation Standards require any runoff from gutters and downspouts to be diverted away from the home, not all HUD Code homes are required to have gutters and downspouts. If gutters and downspouts are provided, then installers should be required to ensure that adequate drainage is provided.

*HUD Response:* The final rule has been revised to require manufacturers to specify in their installation instructions whether the manufactured home is suitable for the installation of gutters and downspouts and if so provided, the instructions are also to indicate that all roof water is to be directed away from the home.

§ 3280.204 Ground Moisture Control/HUD Question: HUD is concerned that excessive voids and numerous tears in the vapor retarder can defeat the purpose of the requirement. Therefore, should limitations be placed on the number and size of voids and tears? If so, what specific limitations would be recommended?

*Comment:* Some commenters advocated that the Model Installation Standards should state that all tears and voids in the ground vapor retarder be repaired. Others raised questions as to what would constitute a minor tear or void, as indicated in the proposed rule; how many tears or voids would be acceptable without repair; and how the regulation would be consistently enforced by states. The commenters also suggested this was one situation where a prescriptive provision is warranted in the standards.

*Comment:* As it would be difficult to repair tears or defects in the ground vapor retarder around piers, the requirement should be revised to not require minor tears and voids at pier locations or other support to be repaired.

*Comment:* The ground vapor retarder should be overlapped at least 12 inches at all joints to prevent weeds and grass from growing through deck slats, and to minimize the likelihood of moisture penetration.

*Comment:* The reference to a six millimeter polyethylene is a typographical error in § 3285.204(b). A six millimeter polyethylene ground vapor retarder would be .039″ thick, as opposed to the six mil polyethylene that

was intended, which would be .006″ thick.

*Comment:* Ground vapor retarders should be required only in enclosed areas and paragraph (a) should be revised to read as follows: ''(a) If space under the home is to be enclosed with skirting or other material, a vapor retarder is required in the following situations: (1) In humid regions (this region is considered to follow the very heavy termite infestation probability map, reference in the HUD Sept., 1996 PFGMH); (2) in situations where the crawlspace soil elevation is below the natural surrounding surface elevation (i.e., pit set applications); (3) in installations where concrete decks, retaining walls or other solid barriers prevent venting on more than one side (refer to § 3285.505).''

*HUD Response:* Section 3285.204 of the final rule does not permit any voids or tears in the ground vapor retarder, requires all joints to be overlapped at least 12 inches, and allows the vapor retarder to be installed around or over footings and other obstructions, as suggested by the commenters. The final rule also corrects the typographical error in the proposed rule in paragraph (b) by requiring the thickness of the vapor retarder to be a minimum of six mil polyethylene sheeting. The final rule also clarifies that all enclosed and skirted areas are to be provided with a ground vapor retarder, except in arid regions and areas for open porches, decks, and recessed entries.

*Subpart D—Foundations*

*Comment:* § 3285.301(b) Alternative Foundation Systems. The requirement that foundations that are not of the pier and footing type are to be designed by a professional engineer increases costs to the consumer.

*Comment:* It is unnecessary for a professional engineer or architect to be consulted for site preparation, if the manufacturer's manual does not cover the specific conditions for the site, because every manual has been reviewed by the industry's national association and it always contains some information with regard to site preparation. If not, the LAHJ can be looked to for any other conforming requirements.

*Comment:* § 3285.301(b) et al. The proposed rule's requirements for ''acceptable engineering practice'' are too broad to ensure uniformity. As written, the commenter finds four problems with the proposed language: (1) It suggests that all aspects of design require registered professionals, (2) the standard is not specific to the design and construction of manufactured homes, (3) it is not specified where the professional has to be registered, and (4) it will increase costs because services of engineers and architects will be required for each installation rather than having the manufacturer provide the information universally. The commenter proposes to change the language to read, * * * Must be prepared by the manufacturer or by a registered professional engineer or a registered architect in accordance with the manufacturer's home design and the Manufactured Home Construction and Safety Standards (3280).'' [Same comment for §§ 3285.301(d), 3285.306(c), 3285.310(c), 3285.312(c)(1) and (2), 3285.314(b), 3285.401(b) and (b)(2), 3285.402(c)]

*Comment:* § 3285.301(c) General. Most registered professional engineers or registered architects are not aware of the federal standards or how manufactured homes are designed and constructed. They are also unaware of critical areas of support. If the designs fail, the federal program has no authority over these outside professionals.

*HUD Response:* The requirements for the use of professional engineers or architects to certify various aspects of the manufacturer's installation instructions for foundation and anchoring support, including alternative foundation systems, are retained in the final rule and are no different than what is currently required for certification of this information under the Manufactured Home Construction and Safety Standards. In addition, one of the responsibilities of a professional engineer or registered architect is to understand all aspects of any design, including critical areas of support, before certifying that it complies with the appropriate standards or requirements. The installer must have the professional engineer's or registered architect's design approved by the manufacturer and its DAPIA prior to installation. DAPIA approval is necessary to enable HUD to enforce such modifications to the manufacturer's installation instructions.

*Comment:* Installation Instructions for Perimeter and Permanent Foundations/ HUD Question: Should manufacturers who design their manufactured homes to be installed on perimeter or permanent foundations, in addition to pier, footing, and anchor foundations, be required to also provide DAPIA-approved installation instructions for perimeter and/or permanent foundations and the pier, footing, and anchor systems?

*Comment:* Additional DAPIA-approved instructions for other foundation systems, including perimeter or permanent foundations, should not be required if a manufacturer has complied with either engineered plans or state-established standards for permanent foundations.

*HUD Response:* DAPIA-approved installation instructions are required to be provided by manufacturers under section 605(b) of the Act. The final rule indicates that foundation systems that are not of pier and anchor type configurations may also be used, when substantiated by engineering design as being capable of resisting the design loads in the Manufactured Home Construction and Safety Standards. If alternative foundation designs are not provided in the installation instructions and are desired or needed for site-specific conditions, installers are required to first contact manufacturers to obtain variations to the instructions or, if not available from the manufacturer, to use a design prepared by a professional engineer or architect (§ 3285.2(c)). The installer must have the professional engineer's or registered architect's design approved by the manufacturer and its DAPIA prior to installation. DAPIA approval is necessary to enable HUD to enforce such modifications to the manufacturer's installation instructions.

*Comment:* § 3285.301(a) General. The design of the foundation system should not be limited to the design loads required by the Manufactured Home Construction and Safety Standards, as indicated on the home's data plate. Presently, manufactured homes are not designed for flood loads, but foundation and anchorage systems sited in flood hazard areas should be capable of resisting flood loads. Similarly, manufactured homes are not presently designed for seismic forces, but foundation and anchorage systems installed in areas subject to earthquake forces should be capable of resisting seismic loads. To remedy the above concerns, the section should be revised to read as follows: ''(a) Foundations for manufactured home installations must be designed and constructed in accordance with this subpart and must be based on site conditions, home design features, and the greater of (1) the loads the home was designed to withstand as shown on the home's data plate, and (2) design loads specified elsewhere in these Standards or by the LAHJ or state.''

*HUD Response:* Under the final rule, states and localities are not prevented from establishing and enforcing seismic requirements or higher design requirements for foundations and anchorage to resist flood loads.

*Comment:* Test Protocol for Alternative Foundation Systems/HUD Question: What specific requirements should be included in the national test protocol for alternative foundation systems protocol referred to in the proposed Model Installation Standards?

*Comment:* It would be best to delay providing any specific considerations or testing requirements in the final rule, because the MHCC has been tasked to develop a recommended test protocol for proprietary foundation systems. Further, any proprietary system can be evaluated by a manufacturer and included, at its option, in the installation manual, subject to DAPIA approval.

*Comment:* Currently a de facto, nationally recognized protocol exists, which has been extensively used to evaluate most of the alternative foundation systems on the market.

*HUD Response:* Section 3285.301(d) of the final rule includes provisions for a nationally recognized testing protocol for proprietary foundation systems or alternatively requires proprietary foundation system designs to be prepared or tested by a registered professional engineer or registered architect. Efforts are underway by the MHCC to develop recommendations for a national testing protocol, which will be considered by the Department of Housing and Urban Development upon its completion. Presently, states that are operating an installation program have differing requirements for the testing of proprietary foundation systems, and there is no universally accepted de facto method for testing, as suggested by one of the commenters.

*Comment:* § 3285.302 Installation of Manufactured Homes in Flood Hazard Areas. Manufacturers should be required to either include flood-resistant considerations in their foundation specifications (and state the conditions under which the specifications are applicable in terms of specific ranges of velocities, depths, and wave action), or state that their foundation specifications do not address flood loads and shall not be used in flood hazard areas.

*HUD Response:* Section 3285.302 of the final rule requires that the installation instructions identify whether the foundation specifications have been designed or not designed for flood-resistant considerations.

*Comment:* § 3285.303(b)(1) Acceptable Piers-Material Specifications. The section should be revised to read as follows: ''Piers are permitted to be concrete blocks, pressure-treated wood treated with a water-borne preservative in accordance with AWPA Standard U1 for Use Category 4B ground contact applications, or adjustable metal or concrete piers.''

*HUD Response:* Section 3285.301(b) of the final rule has been revised in accordance with the above comment to reference a more current standard permitting the use of water-borne preservatives for pressure treatment of wood members.

*Comment:* § 3285.303 Piers/HUD Question: Should the Model Installation Standards include other design characteristics or standards for manufactured piers such as protection from the elements, material specifications, a testing protocol, or listing and labeling requirements?

*Comment:* Piers and other support or anchorage devices should be designed and constructed to resist weathering, corrosion, and deterioration with minimal maintenance and upkeep on the part of the owner. This is especially important in coastal areas where salt spray corrosion is present, and in flood hazard areas where the supports and anchorage are subject to inundation.

*Comment:* Manufactured piers are designed to withstand certain loads and, as long as the home manufacturer provides the loading requirements at each intended pier location, a manufactured pier that is capable of resisting those loads should be acceptable for use.

*Comment:* The proposed rule specifies that manufactured home piers, other than concrete masonry units or steel jack stands, be listed and labeled for the required vertical loads and appropriate lateral loads. This appears to be a performance-based requirement. There does not seem to be any reason to provide a laundry list of design conditions. HUD should maintain the status quo until some nationally recognized material/testing protocol can be developed.

*HUD Response:* The proposed rule did not exclude metal stands or piers from the requirement to be listed and labeled, as suggested by the commenter. This is further clarified in § 3285.308 of the final rule, which requires that any metal pier or other type of manufactured pier be listed, meet the pier load requirements of the Model Installation Standards in § 3285.303, and be protected against weather deterioration and corrosion.

*Comment:* § 3285.303(d) Pier Loads. The word ''poured'' should be deleted, as it suggests that the footers for piers loads need to be poured.

*HUD Response:* The term ''poured'' has been deleted in the final rule.

*Comment:* § 3285.303 Tables 1, 2, and 3. The Tables are confusing and should be simplified by retaining only the ''Pier and Footing Load'' column and by deleting all references to the 16″x16″ concrete footing /pyramid layout method in the Tables and by deleting Figure C to § 3285.312 in its entirety.

*Comment:* The footnotes in the tables should indicate that flood or seismic loads were not considered in developing the tables and that the tables should not be used in determining foundation requirements in flood hazard areas or seismic hazard areas.

*HUD Response:* The Tables in the final rule have been revised to delete the references to footing layouts, and Figure C to § 3285.312 has also been deleted in the final rule. A footnote has also been added to each of the Tables in the final rule indicating the Tables do not consider flood hazard or seismic design load requirements.

*Comment:* § 3285.304 Pier Configuration. There are a number of inconsistencies between the text in this section and Figures A and B to § 3285.306 with regard to cap thickness, size, and material callouts and specifications; shim size, use, thickness, and orientation; and gaps between the main chassis beam and foundation support system specifics.

*HUD Response:* Figures A and B and the text of this section have been revised in the final rule to address comments regarding inconsistencies between them in cap requirements (i.e., ½″-steel plate thickness has been used in both the text and Figures in the final rule), by requiring wood shims to be hardwood and by clarifying alternatives for filling gaps.

*Comment:* § 3285.305 Clearance Under Homes/HUD Question: Should the Model Installation Standards include minimum clearances in areas such as those required for access or inspection?

*Comment:* A minimum clearance under a home is required to install and inspect utility connections, bottom board repairs, etc. All of the area underneath a home should be accessible for that, and even if there are no utility connections in an area, bottom board repairs may still need to be made on-site.

*Comment:* A 12-inch minimum clearance should be maintained beneath the lowest member of the main frame and the ground under 100 percent of the home.

*HUD Response:* The final rule requires a minimum clearance of 12 inches under the home to the ground, including areas between the lowest point of the frame and the grade.

*Comment:* § 3285.306(b) Frame Piers 36 Inches to 80 Inches and Corner Piers. The MHCC and other commenters stated that mortar should not be required, unless specified in the manufacturer's installation instructions. Further, if mortar is required for all frame or corner piers between 36 inches and 67 inches in height, it would add unnecessary costs to the installation of the home.

*Comment:* When concrete block piers are required to use mortar, the type of mortar should be indicated in the standards.

*Comment:* Section 3285.306(a)(5) should be changed to read as follows: ''Mortar is not required if a solid 4″ cap block is placed on top of the hollow masonry blocks and the pier is not being considered as an anchoring point, unless otherwise specified in the installation instruction or required by a registered engineer or registered architect.''

*HUD Response:* Paragraphs (a), (b), and (c) of § 3285.306 of the final rule have been revised to indicate that the use of mortar is only required when specified in the manufacturers installation instructions or required in designs prepared by a professional engineer or registered architect.

*Comment:* § 3285.306(b)(2). The Model Installation Standards should address offsets in piers over 36″ in height and the maximum tilt of piers from vertical for piers of any height.

*HUD Response:* Horizontal offsets for piers over 36″ and up to 67″ in height are limited to 1″ in § 3285.306(b)(1) of the final rule.

*Comment:* Figure B to § 3285.306 Typical Footing and Pier Installation, Double Concrete Block. The maximum pier height of 80 inches should be reduced to 67 inches, because the tie-down charts provided in this standard are limited to 67'' and pier designs greater than 67'' in height will require independent engineering designs.

*HUD Response:* The requirements for frame and corner pier height in Figure B and the text of the final rule have been reduced from 80 inches to 67 inches to be consistent with other tables and figures in the Model Installation Standards.

*Comment:* § 3285.309 Elevated Homes. Since information is provided for designing tie-downs and piers up to 67'' high, the ''one-fourth of the area of a home'' requirement should be deleted.

*HUD Response:* The provisions for elevated homes have been deleted in the final rule, as recommended by the commenters. A professional engineer or registered architect would be required to prepare designs that exceed 67″ in height or for other conditions not specifically addressed by these Model Installation Standards.

*Comment:* § 3285.310 Figures/Tables for Marriage Line Pier Supports (Generally). The manufacturer's installation manual would be easier to reference for these requirements rather than the specifications, Tables, and Figures in the proposed rule.

*HUD Response:* As recommended by the MHCC and others, the Tables, Figures, and specifications are needed to establish the minimum requirements and guidance needed for preparing manufacturer's installation instructions.

*Comment:* § 3285.310 Typical Mate-Line Column Pier and Mating Wall Support. Footnote 1 of Figure A to § 3285.310 requires all footings to extend below the frost line depth. This requirement is inconsistent with § 3285.312(c), which allows footings to be located at grade, when insulated foundation systems are used in areas subject to freezing. Instead, Footnote 1 should be revised to reference § 3285.312(c) for footing requirements in frost-heave susceptible soils. This same comment also applies to Figure B.

*Comment:* Figure A to § 3285.310 Typical Mate-Line Column Pier and Mating Wall Support When Frame-Only Blocking is Required and Figure B to § 3285.310 Typical Mate-Line Column Pier and Mating Wall Support When Perimeter Blocking is Required. For locations more than two feet from the perimeter of the home, the frost line depth should be one half of that required for perimeter footings, because temperatures under the home are not low enough to cause severe soil frost line conditions.

*Comment:* The pier capacity indicated in Footnote 3 for single dry stack concrete block piers should be reduced from 10,000 lbs. to 8,000 lbs., while another commenter recommended the capacity be reduced even further to 5,725 lbs.

*Comment:* Footnote 6 for Figure A and Footnote 4 for Figure B should be revised to indicate that pier or other supports are required for any opening 48″ or greater at either the mate-line or the side wall.

*HUD Response:* Footnote 1 of the Figures A and B to § 3285.310 in the final rule have been revised to indicate that the bottom of the footings must extend below the frost line depth, unless designed for placement above the frost line. In addition, alternatives to locating footings below the frost line, such as by using an insulated foundation system, are provided in § 3285.312(b) of the final rule. Other footnotes to the figures in § 3285.310 have been revised, as recommended by the commenters to indicate that pier supports are required for any opening of 48'' or greater. The footnotes to the figures have also been revised by reducing the maximum load permitted on a single stack concrete block pier from 10,000 lbs. to 8,000 lbs., as determined by HUD's analysis.

*Comment:* § 3285.310(b). Paragraph (b) should be revised to read, ''(b) Mate-line and column pier supports must be in accordance with this subpart and consistent with Figures A through C to this section or located and sized to withstand the loads provided by the home manufacturer for the specific home.''

*HUD Response:* Paragraph (b) has been revised in the final rule to indicate that the mate-line column and pier supports are required to be in accordance with the provisions of Subpart D, unless the pier support and footing configuration is designed by a registered professional engineer or architect.

*Comment:* § 3285.311 Required Perimeter Supports. Piers are not the only means of perimeter support; other means such as additional outriggers or floor joists should also be permitted.

*Comment:* The reference to wood stoves should be changed to fireplace stoves, since wood stoves have not been used in manufactured homes for many years.

*Comment:* References in § 3285.311(b) to Tables 1 and 3 should be deleted, because only Table 2 addressed the use of perimeter piers.

*Comment:* In recognition of mountainous areas where snow loads are greater than 40 psf, a new paragraph (c) should be added to read, as follows: ''Perimeter support in accordance with manufacturer's installation instructions may be required for roof loads in excess of 40 psf.''

*HUD Response:* Section 3285.311(a)(2) of the final rule provides for other means of perimeter support, such as by additional outriggers or floor joists, and requires the sizing of pier and footing supports to consider the additional loads from these alternative supports. The final rule has also been revised to change the term ''wood stoves'' to ''fireplace stoves'' to be consistent with the Manufactured Home Construction and Safety Standards. For roof live loads in excess of 40 psf or greater, a professional engineer or architect must determine the maximum sidewall opening that is permitted. In addition, the references to Tables 1 and 3 have been deleted in the final rule, as recommended by the commenters.

*Comment:* § 3285.312(b)(1)(i) Footings; Acceptable Types of Footings

Concrete/HUD Question: Should the Model Installation Standards provide minimum steel reinforcement specifications for cast-in-place footings?

*Comment:* There should be minimum requirements for steel reinforcement of footings to prevent footing damage or failure.

*Comment:* Footing design, including the amount and size of steel reinforcement, should be left up to the registered professional engineer or architect preparing the design.

*Comment:* Steel reinforcement specifications for cast-in-place concrete footings are not necessary for inclusion in Model Installation Standards, since these are specified by the manufacturer and would exceed the minimum standard requirements.

*HUD Response:* Section 3285.312(a)(1)(ii) in the final rule has been revised to indicate that site-specific soil conditions may require the use of reinforcing steel for design of cast-in-place footings.

*Comment:* § 3285.312(b)(1)(i) Acceptable Types of Footings. Concrete. The requirement for four-inch nominal precast concrete pads to have a 28-day compressive strength of at least 4,000 psi is inconsistent with the industry practice of using 1,200 psi. Further, there is no explanation or engineering rationale provided as to why 1,200 psi cannot be used, and 4,000 psi precast footing pads are not currently available. The standard should be set at 1,200 psi and the same revision should be made to Figure C to § 3285.312.

*Comment:* The word ''must'' should be stricken from § 3285.312(b)(1) to allow concrete footings to be either precast or poured-in-place, or both.

*HUD Response:* The final rule has been revised to reduce the 28-day minimum compressive strength for precast concrete footings from 4,000 psi to 1,200 psi, in accordance with the recommendations of the commenters. While the rule permits either precast or poured-in-place concrete footings, because of different settlement rates for the different types of footings, the use of both at a particular site is limited to a design approved by a registered professional architect or engineer.

*Comment:* § 3285.312(b)(2) Footings; Pressure-Treated Permanent Wood. This subsection should be reorganized into: (i) Physical requirements, (ii) treatment requirements, and (iii) field treatment of cut ends. The subsection, as designed and combined by the commenter, would read: ''(2) Pressure-treated Wood. (i) Pressure-treated wood footings shall consist of a minimum of two layers of nominal 2″ thick pressure-treated wood, or a single layer of pressure-treated plywood with a minimum thickness of three-quarters of inch and a maximum size of 16″x16″, or, for larger sizes two pieces of nominal three-quarter inch thick plywood. Plywood shall be American Plywood Association-rated sheathing, Exposure 1 or Exterior in accordance with PS1. (ii) Pressure-treated lumber and plywood shall be treated with a water-borne preservative in accordance with American Wood Presservers' Association standard U1 for Use Category 4B ground contact applications. (iii) Cut ends of pressure-treated lumber shall be field treated in accordance with AWPA M4–02.''

*HUD Response:* Section 3285.312(a)(2) of the final rule for pressure-treated wood footings has been revised, in accordance with the above recommendations.

*Comment:* § 3285.312(b)(3) Acrylonitrile Butadiene Styrene (ABS) Footing Pads/HUD Question: Should ABS footing pads be listed and what type of criteria should be contained in the Model Installation Standards to ensure the products are durable and can be adequately and uniformly evaluated for review and approval?

*Comment:* ABS footing pads should be certified for use by soil classification. ABS or other plastic type footing pads tend to deflect more in sandy soil conditions.

*Comment:* ABS footing pads are currently being approved and used and should be permitted under the Model Installation Standards. States should continue to be responsible for determining the appropriate criteria and approval procedures for use of ABS footing pads until a nationally recognized material/testing standard is developed.

*Comment:* The proposed rule does not mention that any limitations for use of ABS pads in areas subject to freezing or frost.

*Comment:* ABS footing pads must be approved for the permitted load and soil bearing capacity since there are no requirements for listing or labeling.

*HUD Response:* Section 3285.312(a)(3) of the final rule permits the use of ABS footing pads, but requires they be listed and labeled as to their load capacity and adds the requirement that they also be certified for use in the soil classification at the site.

*Comment:* § 3285.312 Footings. Any type of interior supports and pads that are deemed appropriate by the manufacturer should also be acceptable for use on interior supports of permanent foundations, where any material longevity issues are satisfied.

*HUD Response:* A new paragraph, (a)(4), has been added to this section in the final rule to allow the use of other materials for footing pads, provided they are listed for such use and meet all other applicable requirements for footings in this subpart.

*Comment:* § 3285.312(c) Placement in Freezing Climates. DAPIA-approved installation manuals should indicate that all footings must extend below the frost line or be protected from the effects of frost heave.

*Comment:* Why are frost depths not established in the Model Installation Standards as they are in other model building codes, and instead determined by the LAHJ?

*Comment:* The requirements for monolithic slab systems and insulated foundations in paragraphs (2) and (3) should be revised to permit the design to be prepared by a registered professional engineer or registered architect using acceptable engineering practice to prevent the effects of frost heave or in accordance with SEI/ASCE 32–01, rather than requiring compliance to both of the above provisions. The commenters indicated that for monolithic slabs and insulated foundations there should be two ways to obtain approval, to avoid increasing the cost of installation.

*Comment:* The reference to the SEI/ASCE 32–01 design criteria should not be included because it is too stringent and would not allow perfectly acceptable installation alternatives to be used. Further, any installation system outlined by the manufacturer that meets or exceeds the requirements contained in the Model Installation Standards, is approved by a registered engineer, and provides for protection from the effects of frost heave should be allowed.

*Comment:* If only SEI/ACSE 32–01 is referenced, it may effectively eliminate any type of insulated skirting system from being used to permit pier footings to be above the frost line.

*Comment:* Four field test reports appeared to indicate that alternative strategies could be used to protect manufactured home foundation systems in freezing climates without requiring the foundations to be embedded below the frost line or conform to SEI/ASCE 32–01. The above-referenced tests have shown that insulated skirting materials can keep the ground under the home above freezing temperatures.

*Comment:* Requiring monolithic slabs to be approved by a registered professional engineer or a registered architect will have the consequence of adding thousands of dollars in costs to the purchase price of homes placed in manufactured home communities, not

to mention the additional costs resulting from either the relocation of, or damage and disruption to, the underground utility infrastructure such as water and sewer lines, electric supply lines, and cable and telephone lines.

*Comment:* Manufactured home land-lease communities do not have any flexibility in being able to shift a home even a few inches on a lot to avoid the intersection of the frost-free foundation system with the existing infrastructure. Further, frost-free foundation systems would require state-mandated lease agreements to be modified to reflect who the responsible party will be if a home's concrete slab needs to be removed for emergency repairs or for maintenance work to the park's infrastructure beneath the home. In addition, digging frost-free foundations could cause damage to existing utility services. Further, land-lease communities have allowed manufactured homes to be supported upon concrete block piers resting on either concrete ''ribbons'' or on concrete pads under the home. These systems have proven successful and provide an affordable alternative to supports embedded within the soil, if proper skirting and flexible utility connections were properly installed. The provisions of the proposed HUD standards requiring supports to be installed to or below frost depth should be limited to apply only to those homes permanently installed as real estate.

*Comment:* If it is determined that interior footings at crawl space finished grade, or at least at a reduced depth, are appropriate in frost climates on perimeter-insulated foundation designs, then this determination should also extend to permanent foundations. Placing all interior footings at frost depth below grade is unnecessary and will make manufactured homes less affordable, as the cost is estimated to be between $3,000 and $5,000.

*HUD Response:* The need to protect foundation and anchorage systems against the effects of frost heave is now specifically referred to in §§ 3285.312(b) and 3285.404 of the installation standard. HUD believes that, due to local variability in frost depth locations, local municipalities are the best sources for this information, and HUD will allow frost depth to be determined by the LAHJ in the final rule. Other cost-effective alternatives are permitted in the final rule, such as monolithic slabs and insulated foundation systems, provided they are designed in accordance with either accepted engineering practice to address the effects of frost heave or in accordance with the SEI/ASCE 32–01, Design and Construction of Frost-Protected Shallow Foundations. By permitting the use of these alternative methods and not requiring foundations to be placed below the frost line, HUD believes that problematic situations with utilities and in existing land-lease communities, as described by the commenters, are reduced.

*Comment:* Figure A to § 3285.312 Typical Blocking Diagram for Single Section Homes. Footnote 4 of this figure should be revised by changing the reference from ''atrium doors'' to ''sliding glass doors,'' to maintain consistency with other requirements in the Model Installation Standards.

*HUD Response:* Footnote 4 has been revised in the final rule to refer to patio doors and sliding glass doors instead of atrium doors.

*Comment:* Figure C to § 3285.312 Footing Configuration Layout Designs. Figure C should be deleted from the final rule, since it is based on 16″ x 16″ footing pads; stacked footer layouts that could lead to poor foundation performance and that are inconsistent with the size and thickness of footing pads (i.e., 2′ x 2′ pre-cast concrete pads) typically used in installing manufactured homes. In addition, the use of footing layout configurations is overly conservative, not cost-effective, and should not be used as a minimum standard.

*HUD Response:* HUD agrees with the commenters, and Figure C has been deleted from the final rule.

*Comment:* § 3285.314 Permanent Foundations/HUD Question: Should the Model Installation Standards include a definition and expanded requirements for permanent foundations? If so, what specifics should be considered and included in the Model Installation Standards?

*Comment:* The model (minimum) standard should not require manufacturers to provide DAPIA-approved designs for permanent foundations. This would be an added extra cost to these producers for complying with a requirement that their buyers may not even wish to consider.

*Comment:* The model standard should make no mention of anything concerning how mortgage lenders or others can establish financing eligibility requirements for permanent foundations. This is for the financial institutions to decide, and this standard needs to stay focused on providing a model installation standard. Financing options are outside the scope of the rule, and such references should be deleted.

*Comment:* A permanent foundation under a HUD-Code home should be subject to the same requirements as any modular, panelized, or stick-built home under an LAHJ.

*Comment:* Without a clear definition for a permanent foundation, how will it be determined whether the proposed permanent foundation is adequate?

*Comment:* ''Designs for permanent foundations (such as basements, crawl spaces, or load-bearing perimeter foundations) may be permitted to be obtained from the home manufacturer, or designed by a registered professional engineer or architect, and constructed in accordance with local building code requirements.'' This is the proper performance-based language for any section on permanent foundations.

*Comment:* HUD has materially deviated from the intent of the MHCC language by allowing states and localities to mandate that permanent foundations be used.

*Comment:* HUD should permit states or local governments to impose requirements for homes on permanent foundations in accordance with local governing codes, as long as the design exceeds the model standard, and HUD should not limit mortgage lenders from establishing financing eligibility requirements or underwriting standards that provide greater protection than the model standard.

*Comment:* Section 3285.314(a) should be deleted and replaced with, ''The placement of a manufactured home on a permanent foundation must be in accordance with state [or LAHJ] requirements, installed in accordance with the listing by a nationally recognized testing agency based on a nationally recognized testing protocol, or installed in accordance with the manufacturer's approved permanent foundation installation instructions and in all cases, based on the home's design and load requirements of the Manufactured Home Construction and Safety Standards.''

*HUD Response:* As suggested by a majority of the commenters, the requirements for permanent foundations have been deleted in the final rule. HUD's decision was based on a number of factors, including: (1) Under the Act, states and local governments are not restricted from establishing specific requirements for permanent foundations, provided they comply with the minimum requirements of the Model Installation Standards; (2) Mortgage lenders are not governed by the Model Standards; (3) HUD believes that these requirements may be better addressed as part of the national test protocol for alternative foundations referred to in § 3285.301(d) that HUD is developing together with the MHCC.

*Comment:* § 3285.315 Special Snow Load Conditions. The MHCC language regarding ramadas is preferable to that used in the proposed rule, because HUD unnecessarily limits the use of ramadas to areas where the snow load exceeds 40 psf. Commenter asks why couldn't a ramada be used on a home with a 20-psf roof where the snow load is 30 psf? Also, the MHCC language of ''self supporting'' is much clearer as to the intent than is the HUD language.

*HUD Response:* The final rule is revised to clarify that ramadas are to be self-supporting. HUD's installation program regulations will address requirements for placement of homes in accordance with the design requirements for roof loads and other geographic variations as indicated on the home's data plate.

*Subpart E—Anchorage Against the Wind*

*Comment:* § 3285.401(c). This section lacks sufficient detail as to the information that needs to be included in the manufacturer's installation instructions for anchor assembly type installations. Areas that need to be addressed include: strap attachment, strap angle, stabilizing plates, protection at the sharp corners, longitudinal anchoring methods, and alternative anchoring methods.

*HUD Response:* A new paragraph (d) has been added in the final rule to clarify that all of the information is required to be provided for anchor assembly type installations.

*Comment:* § 3285.401(a–c) Anchoring Instructions. The Maximum Diagonal Tie-down Strap Spacing Tables for determining anchorage requirements to resist wind loads in § 3285.401 are intended for use under specific circumstances. Since flood or seismic loads are not considered in the tables, a new footnote should be added at the end of each table to read as follows: ''The maximum heights and strap spacing specified in the table assume no flood or seismic loads acting on the foundation or home. These tables shall not be used in flood hazard areas or seismic hazard areas. In these areas, the foundation and the anchorage design shall be specified by a registered engineer or professional architect.''

*HUD Response:* The tables have been relocated to § 3285.402 in the final rule. A footnote has been added to each table indicating that flood or seismic loads have not been considered and that the tables are not intended for use in flood or seismic hazard areas. In those areas, the anchorage system must be designed by a registered professional engineer or architect.

*Comment:* § 3285.401(c). The current wording sounds as if a home MUST be installed to the design loads. The language should be changed to read as follows: ''(c) All anchoring and foundation systems must be capable of meeting the loads required by part 3280, Subpart D of the Manufactured Home Construction and Safety Standards (MHCSS), for the area in which the home is located. The home's design must be based on the loads shown on the data plate, or higher.'' Another commenter indicated that this provision would be unnecessarily burdensome and costly for foundation and anchoring requirements, if a home is to be sited in a roof load zone or wind zone that had less restrictive design load requirements than the home had been designed to resist.

*HUD Response:* An exception has been added to this section in the final rule to indicate that when manufactured homes are installed in less restrictive roof load zone and wind zone areas, they may have foundation or anchorage systems that are capable of meeting the lower design load provisions of the part 3280 standards. However, this is conditioned upon the availability of either a design for the lower requirements in the manufacturer's installation instructions or having a foundation and anchorage system designed for the lower requirements by a professional engineer or registered architect.

*Comment:* § 3285.401(d) Anchoring Instructions. A new paragraph should be added to 3285.401: ''Compliance with the wind requirements of NFPA 225 shall be deemed to comply with 3285.401(a) through 3285.401(c).

*HUD Response:* This comment was not accepted, as the requirements in the final rule for anchoring are different in certain respects than those contained in NFPA 225.

*Comment:* § 3285.402(a) Ground Anchor Installations. The definition for ''ground anchor'' should be changed to ''ground anchor assembly,'' as all portions of the anchor, anchor head, bolts and nuts, stabilizer plates, etc., should be protected from corrosion.

*HUD Response:* A new definition for anchor assembly is included in the revisions to parts 3280 and 3285. However, the final rule also contains a separate definition for ground anchors.

*Comment:* § 3285.402(a). The requirements for a nationally recognized ground anchor test protocol should not be finalized until the MHCC recommendations for the test protocol are finalized and presented to HUD for its consideration.

*Comment:* Proposed changes to ground anchor testing methods are not necessary because the testing protocols currently in place have worked well for many years. Failures are not a result of test requirements; they are a result of not following installation instructions. Changing the testing requirements would result in higher costs to homeowners.

*Comment:* The rule does not address the capacity of ground anchors in wet or saturated soil. The lack of specific test standards and protocols in the rule will result in the actual performance of different anchors under the same conditions to vary greatly. This will impact the ground anchor spacing provided in the rule.

*Comment:* Minimum spacing of anchors is not a requirement in the current anchor test protocol being developed by the MHCC Installation Subcommittee and should be considered.

*HUD Response:* HUD disagrees with the comment that a national testing protocol is not needed, because anchor performance is dependent on a number of factors, including soil strength, angle of pull, and size of the stabilizer plate, which are not consistently being evaluated due to the unavailability of a national testing requirement. Recommendations for a nationally recognized testing protocol for anchors referred to in § 3285.402(a) of the final rule are currently being developed by the MHCC, and when completed, are expected to address testing and certification of anchors in saturated soils.

As part of HUD's current research program to evaluate the MHCC draft testing proposal and make recommendations for a national test method for anchoring systems, anchor resistance, and behavior when anchors are located in close proximity to each other will also be considered.

During the interim, anchors are required to be capable of resisting an ultimate load of at least 4,725 pounds and a working load of at least 3,150 pounds in any soil type or classification, including saturated soils, unless reduced ground anchor or strap capacities are used, as permitted in the final rule.

*Comment:* 3285.402(b)(1) Ground Anchors. Ground anchors must be required to be installed to their full depth because when ground anchors are tested they are installed to their full depth.

*HUD Response:* Section 3285.402(b) of the final rule has been revised to require that ground anchors be installed to their full depth. Ground anchors that

are not installed to their full depth have significantly reduced resistance to lateral, longitudinal, and uplift forces.

*Comment:* § 3285.402 Ground Anchor Installations. This section of the proposed rule would require galvanizing of ground anchors, anchor equipment, and stabilizing plates to be zinc-coated in all instances. This is inconsistent with § 3280.306(g) of the Manufactured Home Construction and Safety Standards that permit anchoring equipment to have a resistance to weather deterioration at least equivalent to that provided by a coating of zinc on steel of not less than 0.30 oz./ft$^2$. It also would preclude other acceptable forms of acceptable corrosion protection from being used, such as stainless steel, epoxy coatings, and even mill galvanizing, which are acceptable methods of corrosion protection in the site-building industry. Has HUD considered the economic impact of requiring all anchoring equipment to be zinc coated?

*Comment:* Not all ground anchor assemblies will require the use of steel stabilizer plates. If a ground anchor assembly is tested to be listed or certified according to the Ground Anchor Test Protocol currently under consideration by the MHCC Subcommittee on Installation, that design should be able to be listed as a certified anchor assembly under that section.

*HUD Response:* HUD agrees with the commenters and § 3285.402(c)(2) of the final rule has been revised to indicate that if metal stabilizer plates are used, they must be provided with protection against weather deterioration and corrosion at least equivalent to that provided by a coating of zinc on steel of not less than 0.30 oz./ft$^2$ of surface coated. This paragraph of the final rule also indicates that ABS stabilizer plates may be used when listed and certified for such use.

*Comment:* § 3285.402 Ground Anchor Installations. Longitudinal Anchoring. Longitudinal anchoring should not be required in wind zone 1 locations.

*Comment:* A figure illustrating the installation of longitudinal anchors and tie-down straps should be provided showing the correct and incorrect methods of attachment of the tie-down straps to the chassis beams, as indicated in note 2. Also, further illustrations should be included to show the correct and/or incorrect methods of ground anchor installations, such as stabilizer plates, strap attachment (swivel strap, frame tie w/hook, frame tie w/buckle), proper strap tensioning, and concrete slab anchors.

*Comment:* Section 3285.402(b)(2) is overly prescriptive and restrictive and should be modified to permit pan-bracing or other types of bracing systems to be used for longitudinal anchoring. The standard should be modified to permit pan-bracing systems to be used, unless there is data indicating such systems are insufficient for this purpose.

*HUD Response:* Longitudinal anchoring is required to be provided to resist the design wind forces in all wind zones in the final rule based on the recommendations of the MHCC, NFPA 225, and engineering analysis. As suggested by the commenters, a new Figure C to § 3285.402 has been added in the final rule to provide an example method for providing the longitudinal anchoring required by the final rule. Section 3285.402(c)(3) has also been revised in the final rule to permit the use of alternative systems, such as pan-bracing type systems, provided they are capable of resisting the wind forces in the longitudinal direction.

*Comment:* § 3285.402 Figure B Anchor Strap and Pier Relationship. Note 2 (the diagonal ties footnote) should be removed, as there are other methods of preventing rotation of the I beam, including cross member placement. The sentence should be reworded to state: ''When strap is attached to bottom of I beam, the I beam must be designed to prevent rotation.''

*HUD Response:* Section 3285.401(d)(3) and Note 2 to Figure B on Anchor Strap and Pier Relationship have been revised in the final rule to indicate that when diagonal ties are not attached to the top flange of the main chassis beam, that the frame must be designed to prevent rotation of the beam.

*Comment:* Tables 1–3 to § 3285.402. The information listed in the tables does not include tie-down strap spacing requirements for 36-foot-wide units. The tables should be expanded to also include 75.5″ I-Beam spacing, because homes are currently being constructed to that specification. Also, the tables should be expanded to include other sidewall heights, such as 84″, 96″, and 108″, which are industry standards.

*Comment:* Note 2 of the tables specifies maximum 4″ inset of the anchor head, but an inset of 6″ is more typical to allow for skirting and perimeter wall or piers.

*Comment:* In Note 6 for Table 1 and Note 7 for Tables 2 and 3, the second sentence should be revised to read as follows: ''Table based upon the minimum height between the ground and the bottom of the floor joist being 18 inches.''

*Comment:* The provision in Note 9 in Table 1 and Note 10 in Tables 2 and 3 should be revised to require that ground anchors be installed in accordance with the ground anchor manufacturer's instructions and not the home manufacturer's instructions.

*Comment:* The ''second beam method'' provided in Tables 2 and 3 is not a viable option because of potential damage to HVAC ducts, plumbing, etc., in the floor. If the ''second beam method'' is retained, a cautionary note should be added to the tables to warn of potential damage.

*Comment:* The anchor test protocol currently being developed by the MHCC Installation Subcommittee is recommending a 30-degree minimum angle for testing anchors in the diagonal direction. As such, 18-foot-wide units at 25″ or less in height from the ground to the attachment point on the frame represent the only situation where the 30-degree minimum angle from horizontal cannot be maintained. Rather than unnecessarily limiting anchor performance, HUD should require the minimum height for 18-foot sections to be 33 inches or higher.

*Comment:* A footnote should be added to Tables 2 and 3 to indicate that the tables are based on a maximum force of 1,640 lbs. being resisted by vertical tie straps. This is the maximum tension in the vertical strap as a result of tie-down calculations used to develop the tables. This note is important to properly size sidewall strap attachment components and brackets.

*HUD Response:* The tables for diagonal strap spacing are based on recommendations from the MHCC and represent the most commonly used main chassis beam spacing of 82.5 inches and 99.5 inches and sidewall height of 90 inches. Other main beam spacing configurations or sidewall heights must be designed by a professional engineer or registered architect. The tables for diagonal strap spacing were developed based on a 4″ maximum inset. Other insets for ground anchors are permitted, provided they are included in the installation instructions or designed by a professional engineer or registered architect.

Note 6 in Table 1 and Note 7 in Tables 2 and 3 on minimum height between the ground and floor joist has been revised in the final rule, in accordance with the above comments. Spacing requirements for 18-foot section widths were removed from the Tables 1 through 3 for consistency with other tables in other chapters of these installation standards.

Tables 1 through 3 have also been revised in the final rule by providing

additional conditions for the minimum and maximum angles for their applicability and use in determining the maximum spacing of diagonal tie-down straps in Wind Zones I, II, and III. These limitations were recommended by the MHCC Installation Subcommittee based on the unfavorable results of anchor tests in weak soils, where the angle of pull on the anchor was 30 degrees or less. As a result, a number of the far beam spacing provisions are no longer applicable for use with the tables, although such provisions may be used in accordance with a site-specific design approved by an architect or engineer.

In the final rule, HUD did not include information on vertical tie strap capacity for connections, as this needs to be considered in the manufacturer's designs and installation instructions and is, therefore, not specified in the tables.

*Comment:* § 3285.404 Severe Climatic Conditions. Under § 3285.404, it should be acceptable for ground anchors to be installed above the frost line, when the footings for the foundation system are frost-protected against the effects of frost heave. There should be a reference to § 3285.312(c), in which the approved alternate anchoring system may be included as part of a listed or labeled foundation support system (floating slab or insulated foundation).

*HUD Response:* Section 3285.404 of the final rule has been revised to permit ground anchors to be installed above the frost line, provided the foundation system is frost protected to prevent the effects of frost heave, in accordance with acceptable engineering practice and §§ 3280.306 and 3285.312.

*Comment:* § 3285.405 Severe Wind Zones. As more stringent anchorage design requirements may be specified elsewhere in these standards, by the LAHJ or the state, wind-resistant anchorage provisions contained in NFPA 225 should be deemed acceptable, and should be referenced for use by installers, designers, and LAHJs, if they so choose. The section should be revised to read as follows: ''When any part of a home is installed within 1,500 feet of a coastline in Wind Zones II or III, the manufactured home must be designed for the greater of the increase requirements as specified (1) on the home's data plate (refer to § 3280.5(f) of this chapter), (2) elsewhere in these standards, or (3) by the LAHJ or state, and in accordance with acceptable engineering practice. Where site or other conditions prohibit the use of the manufacturer's instructions, a registered professional engineer or registered architect in accordance with acceptable engineering practice must design anchorage for the special wind conditions. Compliance with the severe wind requirements of NFPA 225 shall be deemed to comply with 3285.405.''

*HUD Response:* The final rule does not include a provision that recognizes the wind and anchoring provisions of NFPA 225 as deemed to comply with these standards, as those requirements are not consistent with these standards. For purposes of installation, a state or LAHJ can establish more stringent wind design provisions for anchoring than are required by these minimum standards.

*Comment:* § 3285.406 Flood Hazard Areas. The section should be reworded to read as follows: ''In flood hazard areas, the piers, anchoring, and support systems must be capable of resisting all combined loads associated with design flood and wind events.'' This is particularly important in geographic areas susceptible to hurricanes where the homes will be subjected to high winds and saturated soil simultaneously. The scouring effects of both wind and water forces also need to be addressed regarding the anchoring and support system components.

*HUD Response:* A reference to anchoring requirements in flood hazard areas has been included in § 3285.302 of the final rule.

*Subpart F—Optional Features*

*Comment:* § 3285.502 Expanding Rooms. The first sentence of this section should be revised to read as follows: ''The support and anchoring systems for expanding rooms must be installed in accordance with designs provided by the home manufacturer or prepared by a registered professional engineer or registered architect in accordance with acceptable engineering practice.'' As proposed, the paragraph suggests that only a registered professional engineer or architect can design the installation.

*HUD Response:* The final rule has been revised to also allow designs for support and anchoring of expanding rooms to be provided by the home manufacturer as an alternative to designs having to be prepared by a professional engineer or registered architect.

*Comment:* § 3285.503 Optional Appliances. These items [all optional features] are clearly under the scope of state and local codes. It would seem that HUD would be preempting such authority by state and local government to address such items.

*Comment:* Section 3285.503(a) should also include a reference to the LAHJ and local or state code requirements, in addition to requirements in the manufacturer's instructions. The appliance manufacturer's instructions may not address all requirements that would be included in local or state codes enforced by the LAHJ.

*Comment:* The word ''must'' could be confusing when referring to optional appliances. These appliances are optional, but the language could be read to require them to be mandatory. Accordingly, the section should be clarified to read as follows: ''Comfort cooling systems installed by someone other than the home manufacturer, must be done according to the appliance manufacturer installation instructions.''

*Comment:* Minimum standards found in the International Residential Code (IRC) and International Fuel Gas Code should be referenced for various appliances and ventilation requirements in this chapter.

*Comment:* While ventilation requirements should be consistent with model building codes, referencing the model codes in these standards would create yet another document that will need to be updated and revised.

*HUD Response:* These installation standards are minimum requirements that a state or local jurisdiction must meet or exceed for any provision of these standards, including optional features covered by this subpart. Accordingly, HUD is not preempting state or local authority in these areas as suggested by the commenters, as states and municipalities may adopt additional requirements for the installation of optional appliances.

References to the International Residential Code (IRC) or International Fuel Gas Code (IFGC) were not presented to the MHCC or suggested to the Department during the development and issuance of the proposed rule. Accordingly, they cannot be considered for introduction at this time into the final rule. However, the commenter may want to re-introduce them again when subsequent revisions to the installation standards are being considered by HUD.

The final rule also indicates that when not provided and installed by the manufacturer, any comfort cooling system that is installed must be installed according to the appliance manufacturer's instructions.

*Comment:* § 3285.503(a)(1)(i) Energy Efficiency. The references within this section should be clarified as to what constitutes proper operation and energy efficiency and closely match, with regard to heat gain for sizing, site-installed air conditioning systems. Also, the requirements for determining heat gain do not appear to include a calculation for latent heat gain.

*Comment:* ASHRAE and other energy standards require the calculation of the

design cooling load, provide the standards by which such load is calculated, and then require the equipment chosen to be the next size available that meets that load to be chosen.

*HUD Response:* Section 3285.503(a)(1)(i) of the final rule has been revised to eliminate the references to: (1) ''For proper operation and energy efficiency'' and (2) sizing site-installed air conditioning systems to ''closely match'' the home's heat gain requirement. The final rule now provides that the air conditioning system must meet the heat gain requirement. In addition, the reference to the term ''sensible'' has been deleted in the final rule so that air conditioning systems are now required to be sized to meet the home's overall heat gain.

*Comment:* § 3285.503(a)(1)(iii) A-coil Units. Simply stating that the air conditioning unit is to be compatible for use with the furnace may not be enough to ensure safety and performance. What about the furnace's manufacturer's instructions and warranties?

*HUD Response:* The final rule has been revised to require that A-coil air conditioning units must be compatible and listed for use with the furnace and also comply with the appliance manufacturer's instructions, as recommended by the commenters.

*Comment:* § 3285.503(a)(2) Heat Pumps. The section as proposed does not provide any sizing criteria for heat pumps and should refer to minimum standards that would apply to such equipment.

*HUD Response:* Heat pumps must be sized to meet the requirements of the Manufactured Home Construction and Safety Standards, 24 CFR part 3280.

*Comment:* § 3285.503(c) Appliance Venting. This section should be revised to be consistent with the wording in 24 CFR 3280.707(b), as follows: ''Heat producing appliances, except ranges and ovens, must exhaust to the exterior of the home.''

*HUD Response:* Section 3285.503(c)(1) and (2) of the final rule have been revised to be consistent with the requirements of the Manufactured Home Construction and Safety Standards, as recommended by the commenter.

*Comment:* § 3285.503(d) Flood Hazard Areas/HUD Question. Where should the outside appliance air inlets and exhausts be located with respect to the base flood elevation in flood hazard areas?

*HUD Response:* The requirements have been relocated to § 3285.102(d)(2)(ii) in the final rule and revised to indicate that exterior appliance air inlets and exhausts in flood hazard areas are to be located at or above the lowest floor elevation of the home.

*Comment:* § 3285.503(d) Figure Dryer Exhaust System. The illustration shows a reverse slope that does not agree with Note 2.

*HUD Response:* The illustration has been corrected to eliminate the reverse slope.

*Comment:* § 3285.504 Skirting. To ensure performance, uniformity, and repeatability, some standard should be referenced to determine that the materials used for skirting are weather-resistant.

*Comment:* All wood skirting within 6″ of the ground should be pressure-treated in accordance with the AWPA standard U1 for Use Category 4A ground contact applications or be naturally resistant to decay and termite infestations. This would allow a lower requirement for skirting materials than for footing pads, since it is a non-structural application.

*HUD Response:* Performance criteria for protection against weather deterioration for skirting materials have been included in the final rule and pressure-treatment requirements for wood skirting have been revised, as suggested by the commenter.

*Comment:* § 3285.505(a) Crawlspace Ventilation. Consider model building code requirements for ventilation requirements, as the proposed requirement for ventilation of one square foot for every 1,500 square feet is insufficient. There should also be not less than four vents in order to control humidity and for management of mold/mildew and temperature handling.

*Comment:* § 3285.505(b). The section should be revised to read as follows: ''Ventilation openings must be placed as high as practicable above the ground.''

*Comment:* § 3285.505(d) Crawlspace Ventilation. The word ''metal'' should be eliminated from § 3285.505(d) to allow other materials to be used for ventilation openings that may perform equal to or better than metal.

*Comment:* Ventilation openings should be covered with a perforated rodent resistant covering resistant to decay.

*Comment:* Requirements for operable louvers should be addressed in cold climates.

*Comment:* § 3285.505(e). A minimum access opening of not less than 24″ by 30″ or five square feet should be required. An opening less than 18″ in any dimension is typically not large enough for service personnel to access underneath the home.

*HUD Response:* The ventilation requirements are generally consistent with other model codes and have not been changed in the final rule, with the exception of the minimum access opening dimensions and requirements for operable or adjustable type openings to be provided in areas subject to freezing. The access opening has been increased in § 3285.505(e) of the final rule from 18 inches in any direction to 18″ by 24″ in height. In addition, the term ''metal'' has been deleted in paragraph (d) and replaced with ''corrosion and weather resistant'' covering. The final rule also requires openings for ventilation to be placed as high as practicable above the ground.

*Subpart G—Ductwork and Plumbing and Fuel Supply Systems*

*Comment:* § 3285.601 Field Assembly. HUD should clarify if the section refers to manufacturer-supplied shipped loose duct systems, because, as presently written, any loose duct would be covered by the rule.

*HUD Response:* The final rule now refers to ''manufacturer-supplied shipped loose ducts,'' to clarify the intent of this section.

*Comment:* § 3285.603(c) Mandatory Shutoff Valve. This section should be modified to require the mandatory shutoff valve to be accessible and clearly identifiable.

*HUD Response:* Section 3285.603(c) of the final rule has been revised to require the master shutoff valve to be both accessible and identifiable, as suggested by the commenter.

*Comment:* § 3285.603(d) Freezing Protection. The term ''heating cable'' should be replaced with the more commonly used term, heat-tape.

*Comment:* What is ''normal occupancy,'' as referred to in § 3285.603(d), and what would then constitute ''abnormal occupancy''?

*HUD Response:* Sections 3285.603(d)(1) and (2) have been revised to delete reference to the term ''under normal occupancy,'' as suggested by the commenters. However, heating cable is the correct term to be used to describe this material and, accordingly, no change is being made to this section in the final rule. A conforming change to the term ''heating cable'' will also be made in future revisions now contemplated for the MHCSS.

*Comment:* § 3285.605 Fuel Supply System. The first sentence of § 3285.605(a) should be revised as follows in order to be consistent with the requirements specified in 24 CFR 3280.705(a): ''The gas piping system in the home is designed for a pressure that is at least 7 inches of water column * * * and not more than 14 inches of water column * * *''.

*HUD Response:* The requirements for testing of gas piping systems in the final rule have been revised to be consistent with the testing requirements in the Manufactured Home Construction and Safety Standards.

*Comment:* § 3285.606 Ductwork Connections. Mastics approved to UL 181 should be used in all cases to seal connections to prevent air leakage. However, mastics should not be used as the only means of connection. Tapes, regardless of whether they are approved or not, should not be allowed, except to aid in the installation of the ductwork for temporary securement.

*Comment:* UL standards 181A and 181B should be referenced for the sealing of duct systems.

*Comment:* The term metal plumber's tape should be removed from § 3285.606(a).

*HUD Response:* The final rule has been revised to clarify the requirements for sealing of ductwork connections so that the appropriate type of tapes and mastics are specified, depending on the type of air duct being used. In addition, the final rule also clarifies that sheet metal ducts must be mechanically fastened, as suggested by the commenters. The reference to ''metal plumber's tape'' has also been deleted.

*Comment:* § 3285.606(e). The section should be revised to read as follows: ''The duct must be suspended or supported above the ground at maximum 4 feet-0 inches on center (unless otherwise noted) and arranged under the floor to prevent compression or kinking in any location, as shown in Figures A and B of this section.''

*Comment:* When straps are used to support a flexible duct, the straps must be at least ½″ wider than the metal spiral spacing of the duct, and installed such that the straps cannot slip between any two spirals.

*HUD Response:* Section 3285.606(e) has been revised in the final rule, in accordance with the recommendations of the commenters.

*Comment:* Figure A to § 3285.606 Crossover Duct Installation With Two Connecting Ducts, Figure B to § 3285.606 Crossover Duct Installation With One Connecting Duct. Note 2 should be revised to read as follows: ''**Note 2.** Crossover duct should be listed for exterior use.''

*Comment:* The concrete block support shown in both figures should be removed as an acceptable support for the crossover duct.

*HUD Response:* HUD agrees with the commenters, and Figures A and B have been revised by deleting the concrete block support from each figure and by adding a note to each figure to indicate that the crossover duct must be listed for exterior use.

*Subpart H—Electrical Systems and Equipment*

*Comment:* § 3285.702(d) Miscellaneous Lights and Fixtures. Ceiling fans must be attached to a properly installed junction box that is listed for ceiling fan application.

*HUD Response:* Section 3285.702(e)(1) of the final rule has been revised to refer to Article 314.27(b) of the National Electrical Code, NFPA No. 70–2005, for connection requirements of the ceiling fan to the electrical junction box and to require the junction box to be listed and marked as suitable for ceiling fan application.

*Comment:* § 3285.702(e) Testing. Paragraph (e)(1) should be deleted in its entirety and (e)(2) should be changed to (e)(1) and revised to read as follows: ''After completion of all site connections of cross-overs, exterior lights, ceiling fans, etc., each manufactured home must be subjected to the following tests, consistent with § 3280.810 of the MHCSS * * *''.

*Comment:* The section should be revised to refer to the electrical testing requirements in § 3285.810(b) of the MHCSS in order to clarify that dielectric tests are not required to be performed after setup. In addition, all of § 3285.702(e)(2) should be deleted as it both duplicates and contradicts what is already required by § 3285.810(b).

*HUD Response:* The final rule has been revised in a manner that is consistent with the recommendations of the commenters.

*Subpart I—Exterior and Interior Close Up*

*Comment:* Figure A to § 3285.801 Installation of Field-Applied Horizontal Lap Siding. The notes and figure need to be less specific and revised to read as follows: Note 1 should be revised by changing the reference from ''double section'' to ''multi-section.'' Note 2 should be revised to clarify that all doors and windows need not be covered with plastic sheeting, and the word ''fasteners'' deleted, because installers, rather than manufacturers, generally provide fasteners so that they are compatible with their installation equipment. The note in Figure A should be revised to read as follows: ''Windows installed with j-rail or brick mold around it,'' because many windows are equipped with brick mold and it serves the same purpose as the j-rail.

*HUD Response:* As suggested by the commenters, editorial revisions have been made to the section and Note 2 has been clarified to indicate that only materials that are not designed to be exposed to the weather are to be covered with plastic sheeting.

*Comment:* § 3285.801(d) Joints and Seams. Any holes made in the roof must be sealed, utilizing approved methods and materials.

*Comment:* The type of acceptable sealant should be specified in the Model Installation Standards for sealing the holes.

*HUD Response:* Section 3285.801(d) has been revised in the final rule by clarifying that the roofing must be made weatherproof and any holes sealed with a sealant that is suitable for use with the type of roofing in which any hole is made.

*Comment:* § 3285.801(e) Mate-line Gasket. Gaskets should also be capable of resisting the entry of water vapor in addition to air, water, insects, etc.

*Comment:* Permit installers or homeowners to provide the mate-line gasket, provided the materials comply with the manufacturer's installation instructions.

*HUD Response:* The final rule has been revised by requiring the mate-line gasket to also be capable of providing resistance against water vapor entry. However, HUD does not agree with suggestions made by commenters that the mate-line gasket be allowed to be provided by parties other than the home manufacturer. This is because HUD deems the gasket material to be an integral part of the construction of the home to provide the resistance to the weather required by the MHCSS.

*Comment:* § 3285.801(f) Hinged Roofs and Eaves/HUD Question. Should the requirements for hinged roofs and eaves be considered installation and subject to the Model Installation Standards and not construction, as proposed by HUD?

*Comment:* A hinged roof should be treated as construction of the home's roof assembly and subject to the requirements of the HUD Code.

*Comment:* The Model Installation Standards should be extended to cover any hinged roof, regardless of wind zone, roof pitch, or flue penetration. This is a normal construction process that is occurring more routinely with HUD Code installations and would save considerable money with regard to Production Inspection Primary Inspection Agency (IPIA) inspection under the on-site completion rule and time under the alternative construction (AC) letter process.

*HUD Response:* It continues to be HUD's position that the on-site completion of hinged roofs with eaves is generally part of the construction process, and that hinged roofs with

eaves must comply with all requirements of the Manufactured Home Construction and Safety Standards (24 CFR part 3280) and the Manufactured Home Procedural and Enforcement Regulations (24 CFR part 3282), even though this work is often completed during the set-up of the home. Accordingly, certain hinged roofs and other construction completed on-site will continue to be subject to the provisions for Alternative Construction in § 3282.14 of the Manufactured Home Procedural and Enforcement Regulations, and may be also subject to the provisions of the future rulemaking for on-site construction. However, manufactured homes with hinged roofs and eaves are not subject to these special requirements if the homes: (1) Are designed to be located in Wind Zone I; (2) have a pitch of the hinged roof that is less than 7/12; (3) have fuel burning appliance flue penetrations that are not above the hinge; and (4) have been completed and inspected as part of the installation process under future rulemaking being developed for the installation program regulations. Nevertheless, even for the above-described conditions, manufacturers are still responsible for providing instructions on how to complete each hinged roof and/or eave construction, in accordance with the requirements of the Manufactured Home Construction and Safety Standards.

*Comment:* § 3285.802 Structural Interconnection of Multi-Section Homes. As proposed, the section is unclear and needs to be clarified as to whether any gap is permitted along the mate-line between sections of multi-section homes.

*Comment:* The section needs to be clarified as to whether any gap between structural elements must be shimmed or only those gaps that exceed 1½ inches.

*Comment:* Fastener lengths would need to be increased to provide adequate protection and staples or nails need to be at least 1½ inches in length at a minimum.

*Comment:* A 1½″ gap is too much because these homes are built in a factory environment where conditions are controlled so that there should be tighter tolerance. The requirement should be reduced to no more than ¾″ gap between structural elements.

*Comment:* When home sections are in contact and the mating gasket is sealed, then all gaps should be filled.

*HUD Response:* Section 3285.802(c) of the final rule has been revised to clarify that upon completion of the close-up, no gaps are permitted between structural elements being interconnected at the marriage line of multi-section homes. However, prior to completion of the close-up, gaps of up to one inch are allowed between structural elements if they are closed upon completion of the set-up; the home sections are in contact with each other, and the mating gasket is providing a proper seal. Also, all gaps are to be shimmed with dimensional lumber and fastener lengths are to be increased to provide adequate penetration into the receiving member of the elements being joined.

*Comment:* § 3285.803(b) Interior Close-up. This section should be revised or deleted. Polyvinyl acetate (PVA) adhesives should not be required for on-site fastening of shipped loose panels. Standard drywall fastening does not require adhesive and thus there is no reason for this excessive prescriptive requirement. When the home has been designed utilizing a structural adhesive for wall panels, the requirement should be specified in the installation instructions of the particular home manufacturer.

*HUD Response:* Editorial revisions have been made to this paragraph in the final rule, and the final rule has been revised to permit alternative fastening methods to PVA adhesives for installing shipped-loose panels, if specified in the manufacturer's installation instructions.

*Comment:* Figure A to § 3285.803 Installation of Field-Applied Panel. What is the intent of restricting the panel width to no less than 16″ or no larger than 32″? Further, if typical panels are 48″ inches in width, how can a ''full size'' panel be over 16″ but less than 32″ in width?

*Comment:* The panel size depicted in the figure and note should be changed to read as follows: ''One full-sized panel 48 inches or less in width.''

*HUD Response:* As suggested by the commenters, the note in the figure has been revised in the final rule to indicate: ''One full-sized panel 48 inches or less in width.''

*Comment:* § 3285.804 Bottom Board Repair. Prior to closure of the underbelly cavity of the home, any areas being repaired must be inspected and any missing insulation replaced before completing the repair of the bottom board material.

*Comment:* Any splits or tears must be resealed in accordance with the manufacturer's installation instructions.

*HUD Response:* Section 3285.804(a) of the final rule has been revised to require any missing insulation to be replaced prior to closure and repair of any damage to the bottom board. Section 3285.804(b) has been revised to require any split or tear in the bottom board to be resealed, in accordance with methods described in the installation instructions.

*Subpart J—Recommendations for Manufacturer Installation Instructions*

*Comment:* § 3285.901 Recommendations for Manufacturer Installation Instructions. The reference to the ''following cautions'' in paragraph (c) should also include the cautions or recommendations in paragraphs (a) and (b), as they are as important as the remaining sections of Subpart J.

*Comment:* The provisions of Subpart J do not relate to the content of manufacturer instructions. It is recommended that this subpart be reconsidered as follows: § 3285.901(a) and (b), § 3285.902, and § 3285.903 could be relocated to subpart B; § 3285.904 could be moved to § 3285.203; and § 3285.905 could be consolidated at § 3285.602.

*HUD Response:* This subpart of the final rule has been re-titled ''Optional Information for Manufacturer Installation Instructions'' and reorganized to include recommendations that may be provided as part of the installation instructions. The cautions have been removed in the final rule and replaced with recommendations for inclusion by manufacturers in their installation instructions.

*Comment:* § 3285.903 Permits, Alterations, and On-site Structures. Planning and permitting processes, as well as utility connection requirements, are outside HUD's authority, but in the proposed rule, HUD does provide standards for some of these items.

*HUD Response:* The final rule makes recommendations, rather than mandatory directives, for inclusion of certain information in the installation instructions related to moving homes to locations; permits, alterations, and on-site structures; utility system connections; and telephone and cable TV wiring. It contains no requirements that these items be actually included in the instructions. The requirements for ''positioning the home'' have been deleted in the final rule.

*Comment:* § 3285.902(d). Fire separation distances should consider the requirements of the LAHJ, as well as distances required in NFPA 501A.

*HUD Response:* The provisions for fire separation in the final rule have been relocated to subpart B, § 3285.101, and require installation instructions to indicate that fire separation distances must be in accordance with Chapter 6 of NFPA 501A, 2003, or the requirements of the LAHJ.

*Comment:* § 3285.902(a) Moving Manufactured Home to Location. One

commenter wrote that the following sentence should be added to the introductory paragraph: ''Inform and contact the LAHJ before moving manufactured home to the site or location.''

*HUD Response:* The final rule has been revised to indicate that the LAHJ should be informed before moving the manufactured home to the site.

*Comment:* § 3285.903(c)(3). The section should be revised to read as follows: ''Unless approved by the home manufacturer's installation instructions, all buildings, structures, and accessory structures must be designed to support all their own live and dead loads.'' Recent tornado and hurricane activities have caused many manufacturers to realize the importance of proper connections of site-installed structures to their homes and offer designs that incorporate the additional roof and wind loads imposed by those site additions.

*HUD Response:* Section 3285.903(c) of the final rule has been revised to require any accessory building or structure to be capable of supporting its own live and dead loads, unless the structure is designed to be attached to the manufactured home by a professional engineer or registered architect or is otherwise specifically included in the manufacturer's installation instructions.

*Comment:* § 3285.905 Utility System Connections. If LAHJ requirements govern utilities and LAHJ standards vary, how can there be any meaningful installation instruction with regard to utilities? The instruction, at best, should refer installers and residents to consult with any serving utilities; and, as such, no regulation is necessary.

*HUD Response:* The final rule has been revised by recommending the installation instructions suggest different procedures for the installer to follow prior to making any utility system connection, depending on the availability of utility services, an LAHJ, or both, as well as procedures to follow in rural areas where utility services are not available and there is no LAHJ.

*Comment:* § 3285.905 Drainage Systems. The proposed language for making drainage-to-sewer system connections is too restrictive, as an installer may opt to ''hard-pipe'' the connection without the use of an elastomeric coupling device.

*HUD Response:* The final rule has been revised by recommending the use of other methods acceptable to the LAHJ as an alternative to elastomeric couplings for connecting the main drain line to the site sewer hookup.

*Comment:* § 3285.906 Heating Oil Systems. Since fuel oil supply tanks and systems installed at the site are not within the scope of HUD's authority, what makes fuel oil different from propane, site installed air conditioning systems, etc? This will make it harder to determine who is responsible for installation and liability, should something go wrong.

*HUD Response:* While HUD agrees that these provisions for site-installed oil fuel tanks and systems are outside of the scope of HUD's authority, for fire safety and other considerations the final rule does recommend that installation instructions include information related to installation and testing of oil supply tank and piping, in accordance with NFPA 31, 2001, Standard for the Installation of Oil Burning Equipment, and oil furnace manufacturer instructions for pipe sizing and installation procedures.

*Comment:* § 3285.907 Telephone and Cable TV. A reference to the applicable sections of the National Electrical Code, NFPA 70—2005 Edition, should be incorporated in the manufacturer's installation instructions for telephone and TV cable wiring and connections.

*HUD Response:* A reference to the National Electrical Code has been added in the final rule to the recommendations for installing telephone and cable TV wiring.

Miscellaneous Comments

*Comment:* Enforcement and Program Operation Matters. HUD received a large number of comments and questions related to the operation and enforcement of its installation program.

*HUD Response:* Comments and questions related to program operation and enforcement are not being addressed in this rulemaking. Instead, they will be duly considered by HUD, as appropriate, in response to the proposed rule for the Manufactured Home Installation Program, 24 CFR part 3286, that was published in the **Federal Register** on June 14, 2006.

*Comment:* § 3285.5 Definitions—''Installers.'' One of the most glaring omissions from the proposed installation standards was a definition or identification of manufactured home installers since, as drafted, so many construction responsibilities are redistributed to installers. While the proposed rule speaks as if there is one installer per project, in reality there are many installers involved. By failing to define installers, responsibilities are being further fractured and protections are weakened. The commenters advocate that to ensure quality, durability, and safety, a single entity needs to take responsibility, which they believe should be the manufacturer.

*HUD Response:* A definition for ''installer'' is in the proposed rule for the installation program regulations in part 3286.

*Comment:* Exclusivity of Model Installation Standards. It is important for the standards or their state-adopted counterparts to be the only federal installation standard recognized by HUD. Currently, HUD's FHA Title II program references the Permanent Installation Guide for Manufactured Housing.

*HUD Response:* HUD is considering whether to amend references in its current Title II program to specifically refer to these Model Installation Standards.

*Comment:* Impact on Federal Agencies. One commenter wrote that HUD has not considered the impact of the proposed rule on other federal agencies that are engaged in purchasing and installing manufactured homes for federal purposes. Since the proposed rule does not address the regulations establishing an installation program, it is impossible to determine if this rule, as part of a larger program, imposes any mandates on state or local government.

*HUD Response:* These issues will be considered as part of HUD's federalism analysis on this final rule.

*Comment:* Bay Windows. The Department deleted the MHCC draft recommendation for inclusion of bay window installation under the proposed Model Installation Standards. Commenters wrote that under § 3285.801(f), a manufacturer would need to furnish installation instructions for a hinged roof so that the installer would know the necessary elements of field installation. Bay windows are similar, as they would be a ''ship-loose'' item. In the opinion of these commenters, as long as the home is designed properly for the product attachment, the manufacturer provides DAPIA-approved installation instructions, and the installer can follow those instructions, bay windows should be covered under the Model Installation Standards and not the Manufactured Home Construction and Safety Standards.

*HUD Response:* HUD does not agree with these commenters, and will continue to treat the site completion of bay windows as construction that is subject to the Manufactured Home Construction and Safety Standards. A detailed discussion of the comments and HUD's position on hinged roofs and eaves can be found above under the analysis of public comments for § 3285.801.

*Comment:* Every other national design standard and code for residential construction, including NFPA 225 and NFPA 501, references more recent editions of ASCE 7 Standard for Minimum Design Loads for Buildings and Other Structures. The Model Installation Standards must also do this to achieve equivalent protection to manufactured homes and manufactured home residents.

*HUD Response:* The ASCE 7–88 standard is currently referenced in the HUD Manufactured Home Construction and Safety Standards and is used as the basis for establishing the design load requirements for the construction standards that are referenced in these installation standards. Accordingly, it is not necessary to again reference the ASCE 7 standards in these installation standards.

## III. Section-by-Section Revisions—Changes to Proposed Rule

In response to the public comments and subsequent reevaluation by HUD, the following is a summary by subpart of the section-by-section revisions being made to the proposed rule for the Model Installation Standards, 24 CFR part 3285, published in the **Federal Register** on April 26, 2005. An overall editorial change made throughout the rule was to move all tables and figures within a section to the end of the section. This change will promote ease of reference and will simplify the process of amending the rule, as may be necessary, in the future.

### *Subpart A—General*

Section 3285.1(a) in the final rule makes clear that the manufacturers' installation instructions required by § 3285.2, including any specific operation or assembly therein, are deemed to comply with the Model Installation Standards, provided they meet or exceed the minimum requirements in the installation standards and do not take the home out of compliance with the MHCSS. Further, clarifications are also being added to § 3285.1(a) with regard to the applicability of the installation standards to the work necessary to join sections of a multi-section home together. Specifically, work associated with the connection of exterior lights, ceiling-hung light fixtures, or fans, as identified in subpart I, is considered installation. This section is also being modified to clarify that work associated with hinged roofs and eaves in § 3285.801 and other work done on-site and not specifically identified in this part as close-up is not covered by the installation standards and, as such, is subject to the MHCSS and Procedural and Enforcement Regulations.

The applicability provisions in § 3285.1(b) were modified to indicate that the installation standards are not to be construed as relieving manufacturers, retailers, or other parties of responsibility for compliance with other applicable ordinances, codes, regulations, and laws. In addition, the section was revised to indicate that manufactured homes are also subject to the requirements of the Manufactured Home Installation and Dispute Resolution Programs, upon effect. A new provision, § 3285.1(c), has been included in the final rule that requires HUD to seek input from the MHCC when considering future revisions to the installation standards. (See discussion in II, Analysis of Public Comments).

Paragraph (a) of § 3285.2, Manufacturer Installation Instructions, is being revised to clarify that the installation instructions must include all topics covered in the installation standards. This paragraph is also being revised to require the installer to certify that it completed the installation in compliance with the manufacturer's instructions or an alternate design (see paragraph (c)), prepared by the manufacturer or certified by a professional engineer or architect, that provides a level of protection equivalent to or greater than what is required by the installation standards.

A new paragraph § 3285.2(b) is added to specify those circumstances when a professional engineer or registered architect must prepare and certify that the manufacturer's installation instructions meet or exceed the Model Installation Standards for foundation support and anchoring.

The recommended provisions for ''variations to manufacturer installation instructions'' in subpart J of the proposed rule are being relocated to paragraph (c) of § 3285.2 in the final rule. This will require installers who intend to provide support and anchorage that is either different from the methods specified in the manufacturer's instructions, or that encounter site or other conditions that prevent the use of the instructions, to first attempt to obtain site-specific instructions from the manufacturer or, if not available from the manufacturer, to obtain a design that has been prepared by a professional engineer or architect that is consistent with the design and the MHCSS. The installer must have the professional engineer's or registered architect's design approved by the manufacturer and its DAPIA prior to installation. DAPIA approval is necessary to enable HUD to enforce such modifications to the manufacturer's installation instructions.

A new paragraph (e) is being added to § 3285.2 in the final rule to require the manufacturer to include, as part of its instructions, at least one method for temporarily storing each section of a manufactured home at the manufacturer's facility, retailer's lot, or the home site.

Section 3285.4 is being revised to provide an updated list of the standards being incorporated by reference in the final rule. (See discussion in ''V. Revisions to Standards Incorporated by Reference'' in this preamble.) Reference standards have the same force and effect as the other Model Installation Standards, except that whenever reference standards and the Model Installation Standards are inconsistent, the requirements of the Model Installation Standards prevail to the extent of the inconsistency.

Certain definitions have been added or modified in § 3285.5 of the final rule for terms used in the Model Installation Standards.

A new section, § 3285.6, ''Final leveling of the manufactured home,'' is being added to require that a home be adequately leveled prior to completion of the installation. A manufactured home is considered to be adequately leveled if there is no more than a ¼-inch difference between adjacent pier supports, and if the exterior windows and doors do not bind and can be operated properly.

### *Subpart B—Pre-Installation Considerations*

The fire separation provisions have been relocated from the recommended provisions in subpart J of the proposed rule and incorporated as part of the minimum requirements in subpart B, § 3285.101, as part of the pre-installation considerations. The final rule requires that fire separation distances be in accordance with NFPA 501A or the requirements of the LAHJ, which could be more or less restrictive than NFPA 501A. This will require compliance with the fire separation distances in NFPA 501A, 2003 edition, whenever there are no requirements established by the LAHJ. Conversely, when the LAHJ has established fire separation distance requirements, the separation distances need not conform to the NFPA 501A provisions.

Additional requirements were added for installation of manufactured homes in flood hazard areas in paragraph (d) of § 3285.102 to include provisions for the installation of exterior appliances.

Section 3285.103 is being revised to clarify that, prior to the initial

installation of a new manufactured home, the installer is to verify that the design and construction of the manufactured home, as indicated on the design zone maps provided with the home, are suitable for the site location where the home is to be installed. In addition, to assist the installer in verifying the appropriate zone location for the specific site, this section is being revised by referring to the county and local government references that further define the wind zone, roof load zone, and thermal zone in part 3280.

*Subpart C—Site Preparation*

Section 3285.201 is being revised in the final rule to indicate that, after removal of organic material, the home site must be graded or otherwise prepared to ensure adequate drainage.

A pocket penetrometer is now included in the final rule as one of the acceptable methods for determining bearing capacity and soil classification in § 3285.202(d). Furthermore, a new paragraph (e) has also been included in this section that permits the use of an allowable default soil bearing pressure of 1,500 psf, unless site-specific information requires the use of lower soil bearing values.

The site drainage provisions in paragraph (b) of § 3285.203 of the final rule have been revised by adding other alternatives than site grading to remove any water that may collect under the home.

The provisions for gutters and downspouts in paragraph (f) of § 3285.203 have been modified in the final rule to indicate that manufacturers specify in their instructions whether the home is suitable for the installation of gutters and downspouts.

The provisions for ground moisture control have been revised in paragraph (c) of § 3285.204 of the final rule by allowing the required vapor retarder to be installed around or over footings placed at grade and around anchors and by requiring any void or tear in the vapor retarder to be repaired.

*Subpart D—Foundations*

Section 3285.301(b) of the final rule has been revised to also recognize metal piers as one of the possible variables to the pier and footing specifications and configurations in this subpart.

Section 3285.302 of the final rule has been revised to require all manufactured homes in flood hazard areas to be installed on foundation supports that are designed and anchored to prevent floatation, collapse, or lateral movement of the structure. In addition, manufacturers' instructions must indicate whether or not the foundation specifications have been designed to resist flood loads.

Tables 1, 2, and 3 to § 3285.303 for pier loads have been modified in the final rule by removing all references to allowable soil bearing pressure and footing configurations that were previously associated with the tables and by deleting Figure C to § 3285.312—Footing Configuration Layout Designs that was referenced in each of the tables.

Paragraphs (b) and (c) in § 3285.304 of the final rule are being modified to be consistent with the provisions and notes shown in Figures A and B to § 3285.306(b).

Section 3285.305 has been modified in the final rule by requiring a minimum of 12″ of clearance between the main chassis frame member and the grade and all other areas of the home.

The maximum height for frame and corner piers in § 3285.306(b) and (c) of the final rule has been reduced from 80″ to 67″ to be consistent with the maximum heights shown in the tables for maximum diagonal tie-down strap spacing in Tables 1, 2, and 3 to § 3285.402. Furthermore, mortar is no longer required for this range of pier heights, unless specified in the manufacturer's instructions and the maximum horizontal offset from the top to the bottom of the pier is one inch.

The provisions for elevated homes in the proposed rule are no longer needed and have been deleted and replaced with new paragraph (c) in § 3285.306, ''All piers over 67 inches high,'' in the final rule. Mortar is not required for concrete block piers of this height, unless specified by the design.

A new paragraph (b) has been added to § 3285.308 in the final rule that requires metal or other manufactured piers to be weather-protected against deterioration and corrosion with protection that is at least equivalent to a coating of zinc on steel of at least 0.30 oz./ft$^2$.

Footnotes were added to Figures A and B to § 3285.310 to require piers to be placed on each side of any mating wall opening when the opening is 48″ or greater in width and to indicate that for roof loads of more than 40 pfs, a professional engineer must determine the maximum mating wall opening permitted without piers or other supports. Footnote 3 was also revised in both figures to indicate that the maximum single stack concrete block pier loads cannot exceed 8,000 lbs.

The requirements for perimeter pier supports are modified by adding a new paragraph (a)(ii) in § 3285.311 of the final rule permitting the use of alternative supports in lieu of perimeter piers such as outriggers or extra floor joists. However, when alternative supports are used, the designs must consider the additional loads in sizing the pier and footing supports under the main chassis beam. In addition, for roof live loads of 40 psf or greater, paragraph (b) of this section requires that a professional engineer or architect determine the maximum sidewall support opening permitted with perimeter pier or other supports.

Footnotes are also modified in the final rule to Figures A and B to § 3285.312, ''Typical Blocking Diagrams for Single Section Homes and Multiple Section Homes,'' to require piers on both sides of exterior sidewall doors, patio doors, sliding glass door openings, under jamb studs at multiple window openings, and other openings of 48″ or greater in width.

The requirements for footings in paragraph (a) and (b) of § 3285.312 of the proposed rule are incorporated into paragraph (a) of this section in the final rule by reducing the minimum compressive strength for 4″ pre-cast concrete pads from 4,000 psi to 1,200 psi; by noting that for 6″ or greater poured-in-place concrete pads, slabs, or ribbons, reinforcing steel may be required for site-specific conditions; by revising the requirements for pressure-treated footings and by changing the specification for their pressure treatment to a water-borne adhesive, in accordance with AWPA Standard U1–04; by requiring ABS footing pads to be certified for use in the soil classification at the site; and by adding new provisions to allow other types of footing materials, provided they are listed for such use and meet all other applicable provisions of the installation standards.

The provisions for placement of footings in freezing climates is being relocated from paragraph (c) in the proposed rule to paragraph (b) in § 3285.312 of the final rule and is being revised to require that footings be designed to resist the effects of frost heave by one of the methods specified in this section. The final rule requires that conventional footings be placed below the frost line, unless an insulated footing or monolithic slab is used. In addition, alternatives allowing insulated footings or monolithic slabs to be placed above and not below the frost line depth must be designed by a professional engineer or architect, in accordance with either acceptable engineering practice or SEI/ASCE 32–01, and not both, as previously indicated in the proposed rule. Furthermore, these alternatives are permitted only if all relevant site conditions such as soil characteristics, site preparation,

ventilation, anchorage requirements, and insulative properties of the underfloor enclosure are considered.

Figure C to § 3285.312 in the proposed rule has been deleted in the final rule, as the footing configuration and layouts shown in the figure were determined to be non-typical of current practices used in installing manufactured homes.

The table for the size and capacity of unreinforced cast-in-place footings in § 3285.312(d) is revised by limiting the maximum capacity of certain footing sizes to 8,000 lbs. and 16,000 lbs., based on the maximum pier capacity of single or multiple stack concrete block piers. A footnote has been added to the table indicating that higher design load capacities may be permitted if a professional engineer or architect prepares the design.

The provisions for permanent foundations in § 3285.314 of the proposed rule have been deleted in the final rule. The requirements for permanent foundations can be adequately considered and addressed under the provisions of the final rule for alternative foundation systems, including the requirement that such designs be prepared by a professional engineer or architect.

Section 3285.315(b) for ramadas in the final rule is revised by requiring them to be self-supporting, except for any weatherproofing connection that is made to the home.

*Subpart E—Anchorage Against Wind*

A new paragraph (d) has been added to § 3285.401 in the final rule that provides the minimum information and details that must be included in the manufacturers installation instructions for anchor type installations necessary to secure manufactured homes against the wind.

A new paragraph (a) has been added in reorganizing § 3285.402 in the final rule to require each ground anchor to be provided with installation instructions, in accordance with its listing or certification, and to be certified for use in a classified soil, based on a nationally recognized testing protocol. Paragraph (a) of § 3285.402 in the proposed rule has been renumbered as paragraph (b) and has been modified in the final rule to require that anchors be installed to their full depth and that anchors and tie-down straps be protected against corrosion at least equivalent to that provided by a coating of zinc on steel of 0.30 oz./ft$^2$ of surface coated. This section now also requires that both the working and ultimate load of the ground anchors and anchoring equipment be determined by a professional engineer or registered architect.

Paragraph (b) of § 3285.402 has been renumbered as paragraph (c) in the final rule, and paragraph (c)(1) is revised by indicating that the spacing for ground anchors and straps be no greater than the spacing in the Tables 1 through 3 of this section, unless designed by a professional engineer or registered architect. A professional engineer or registered architect must also prepare the design for any conditions where the tables are not applicable, such as for higher sidewall conditions, or diagonal strap angle-to-ground conditions that are below 30 degrees or exceed 60 degrees, etc. Tables 1 through 3 are also revised by limiting the spacing to applicable conditions for the diagonal strap to between 30 degrees and 60 degrees to the ground.

Paragraph (c)(3) is renumbered as paragraph (c)(2) and the provisions of (ii) in the proposed rule are separated into (ii) and new (iii) of this paragraph in the final rule. In addition, (iii) is also revised to require the correct size and type of stabilizer plate to be installed, if required by the listing, and by allowing the use of ABS stabilizer plates when they are listed and certified for such use.

Paragraph (c)(2) on longitudinal anchoring is renumbered as paragraph (c)(3) and is revised in the final rule by providing a new Figure C as an example of one acceptable method that may be used for longitudinal anchoring and for attaching the longitudinal strap to the ground anchor and main chassis beam of the home.

Section 3285.404 of the final rule is revised to indicate that ground anchors must be installed below the frost line, unless the foundation system is frost-protected to resist the effects of frost heave, in accordance with acceptable engineering practice, § 3280.306 of the MHCSS, and § 3285.312 of these installation standards.

The requirements for anchoring manufactured homes in flood hazard areas in § 3285.406 of the proposed rule have been revised by relocating the requirements to § 3285.102 in the final rule and by adding reference to the relocated section in § 3285.406 of the final rule.

*Subpart F—Optional Features*

The requirements for optional appliances in § 3285.503 of the final rule are being revised as follows: Paragraph (a)(1)(i) requires site-installed air conditioning equipment to be sized to ''meet'' the home's heat gain rather than ''closely match'' the heat gain, as indicated in the proposed rule; paragraph (a)(1)(iii)(A) is revised by requiring A-coil air conditioning type units to be installed in accordance with the appliance manufacturer's instructions and be compatible and listed for use with the furnace installed in the home; a new paragraph (a)(3)(ii) is added for evaporative coolers that are not roof-mounted to be installed in accordance with the more restrictive provisions of the listing or the appliance manufacturer's instructions; and a new paragraph (c) is added for completion of appliance venting systems for compatibility with the requirements of the MHCSS. In addition, the provisions for outside appliances and air inlets in flood hazard areas have been relocated to § 3285.102(d)(2).

The weather protection and pressure treatment requirements for metal and wood skirting are further clarified in § 3285.504(a) and (c) of the final rule.

The provisions for ventilation openings are revised in § 3285.505(d) of the final rule by requiring them to be corrosion- and weather-resistant and to be designed to resist the entry of rodents. In addition, in areas subject to freezing, the openings must be of the adjustable type permitting them to be open or closed, depending on the climatic conditions.

Section 3285.505(f) of the final rule is being revised to require any surface water runoff from the furnace, air conditioning, or water heater drain to be directed away from the home or collected by other methods identified in § 3285.503.

*Subpart G—Ductwork and Plumbing and Fuel Supply Systems*

Section 3285.606(c)(1) of the final rule is modified to require that the mandatory shutoff valve installed be identified, accessible, and installed between the water supply and inlet.

The test pressure requirements for gas piping systems in § 3285.605(a) of the final rule are revised to be consistent with the testing provisions for fuel piping systems in the MHCSS.

Paragraph (a) of § 3285.606 of the final rule for ductwork connections is revised to require all crossover connections to the main duct system to be sealed to prevent air leakage. Paragraph (e) is also revised to require the crossover duct to be supported by straps spaced at a maximum distance of 4 feet or as otherwise permitted by the installation instructions. In addition, for flexible type ducts, the straps must be at least ½″ wider than the metal spirals encasing the duct and be installed so that the duct cannot slip between any two spirals.

*Subpart H—Electrical Systems and Equipment*

Paragraph (d) of § 3285.702 is revised in the final rule to require that a ceiling paddle fan be connected to a junction box that is listed and marked for ceiling fan application, in accordance with the requirements of the NEC, 2005 edition.

The testing requirements in paragraph (e) of § 3285.702 are also being modified in the final rule to clarify that the electrical system must be inspected and tested at the site after completion of all electrical wiring and connections, lighting, and installation of any ceiling fans.

*Subpart I—Exterior and Interior Close-up*

Section 3285.801(d) is revised in the final rule to require any holes that are made in the roofing to be made weatherproof and sealed with an exterior sealant that is suitable for use with the roofing material.

The requirements for hinged roofs and eaves in § 3285.801(f) of the final rule are revised to require compliance with all requirements of the MHCSS (24 CFR 3280) and the Manufactured Home Procedural and Enforcement Regulations (24 CFR 3282). While this work is often completed during the set-up of the home, it is not considered to be installation, but work associated with the construction of the home and therefore subject to HUD's MHCSS. As such, certain hinged roofs continue to be subject, as appropriate, to the provisions of Alternative Construction in § 3282.14 and the provisions of the future rulemaking for on-site construction, upon effect. Currently, manufactured homes with hinged roofs are not subject to these special requirements, if the homes are: (1) Designed to be located in Wind Zone I, (2) the pitch of the hinged roof is less than 7/12, and (3) fuel burning appliance flue penetrations are not above the hinge. However, even for the above-described conditions, manufacturers are still responsible for providing instructions on how to complete each hinged roof or eave construction in accordance with the requirements of the MHCSS.

Section 3285.802(c) of the final rule is revised by clarifying that no gaps are permitted between structural elements along the mate-line of multi-section homes upon completion of the exterior close-up. However, the final rule does permit minor gaps, up to one inch, prior to completion of the exterior close-up provided: (1) All such gaps are closed before completion, (2) the home sections are in contact with each other, (3) the mating gasket is providing a proper seal, and (4) all such gaps are shimmed and connected to the structural element(s) with properly sized fasteners.

Section 3285.804 of the final rule is revised by requiring missing insulation to be replaced prior to making any bottom board repairs, any splits or tears to be resealed with tape or patches in accordance with the installation instructions, and by requiring all edges of repaired areas to be taped or otherwise sealed.

*Subpart J—Optional Information for Installation Instructions*

This subpart of the final rule has been re-titled and reorganized to include recommendations that may be provided as part of the installation instructions. The final rule also clarifies in a new section, § 3285.907, that any other information manufacturers may want to provide in their instructions that is not specifically addressed in this subpart must be consistent with the Model Installation Standards and not take the home out of conformance with the MHCSS.

The general provisions in § 3285.901 are revised by also including ''access'' to the site as another area that is outside of HUD's authority and that may be governed by the LAHJ.

Provisions addressing variations to manufacturers installation instructions in the proposed rule have been relocated to § 3285.2(b) in the final rule.

Section 3285.902 of the final rule is revised by recommending that the installation instructions include recommendations that the home should not be moved to the site until: (1) The LAHJ is informed, (2) the site is prepared in accordance with Subpart C of the Model Installation Standards, and (3) utilities are available as required by the LAHJ. In addition, recommended provisions for: (1) Positioning the home in the proposed rule have been relocated to § 3285.6 of the final rule, (2) fire separation distances in the proposed rule have been relocated to § 3285.101 in the final rule, and (3) requirements for drainage structures have been relocated under paragraph (b) of this section in the final rule.

Encroachment and setback distances in the proposed rule have been relocated under § 3285.903, ''Permits, alterations, and on-site structures,'' in the final rule. In addition, paragraph (c) of this section in the final rule is modified to indicate that each accessory building and structure is to be designed to support its own live and dead loads, unless the structure is attached to the manufactured home and otherwise included in the installation instructions or designed by a professional engineer or registered architect.

The provisions for utility service connections are renumbered as § 3285.904 in the final rule, and recommendations for procedures to be used prior to making utility service connections are revised in the final rule, as follows: (1) Where both utility services and the LAHJ are available, both should be consulted prior to making any connections of the manufactured home to the utilities; (2) where no LAHJ exists and utility services are available, the utility should be consulted before connecting the manufactured home to any utility service; and (3) in rural areas where no LAHJ or utility services are available, a professional should be consulted prior to making any system connections.

The provisions for heating oil systems are renumbered as § 3285.905 in the final rule and the recommendations for the installation instructions are revised in the final rule to indicate that homes with these systems and storage tanks be tested to in accordance with NFPA 31, Standard for Installation of Oil Burning Equipment, 2001 edition, or, if applicable, to the more stringent requirements of the LAHJ.

The provisions for telephone and cable TV in the proposed rule are renumbered as § 3285.906 in the final rule and it is recommended that the installation instructions explain that these services should be installed in accordance with the requirements of the LAHJ or the NEC, NFPA No. 70–2005.

## IV. Revisions to Standards Incorporated by Reference (Reference Standards)

The following is a list of the standards incorporated by reference that is being revised from those in the proposed rule by this final rule.

*Added:*

AWPA—American Wood-Preservers' Association, P.O. Box 388, Selma, Alabama 36702.

AWPA M4–02, Standard for the Care of Preservative-Treated Wood Products, 2002.

AWPA U1–04, Use Category System; User Specification for Treated Wood, 2004.

APA—The Engineered Wood Association, 7011 South 19th Street, Tacoma, Washington 98411, telephone number (253) 565–6600, fax number (253) 565–7265.

PS1–95, Construction and Industrial Plywood (with typical APA trademarks), 1995 edition.

NFPA Publications—National Fire Protection Association, 1

Batterymarch Park, Quincy, Massachusetts 02169–7471.

NFPA No. 70, National Electrical Code, 2005.

U.L.—Underwriters Laboratories, 333 Pfingsten Road, Northbrook, Illinois 60062.

UL 181A, Standard for Safety Closure Systems for Use with Rigid Air Ducts and Air Connectors, 1994, with 1998 revisions.

UL 181B, Standard for Safety Closure Systems for Use with Flexible Air Ducts and Air Connectors, 1995, with 1998 revisions.

*Removed:*

AWPA—American Wood-Preservers' Association, P.O. Box 388, Selma, Alabama 36702.

AWPA C2, Standard for the Preservative Treatment of Lumber, Timber, Bridge Ties and Mine Ties, by Pressure Processes, 2001.

AWPA C9, Plywood—Preservative Treatment by Pressure Processes, 2000.

## V. Findings and Certifications

*Regulatory Planning and Review*

The Office of Management and Budget (OMB) reviewed this rule under Executive Order 12866 (entitled ''Regulatory Planning and Review''). OMB determined that this rule is a ''significant regulatory action,'' as defined in section 3(f) of the order (although not an economically significant regulatory action, as provided under section 3(f)(1) of the order). The docket file is available for public inspection between 8 a.m. and 5 p.m. weekdays in the Office of the Rules Docket Clerk, Office of General Counsel, Department of Housing and Urban Development, 451 Seventh Street, SW., Room 10276, Washington, DC. Due to security measures at the HUD Headquarters building, please schedule an appointment to review the docket file by calling the Regulations Division at (202) 708–3055 (this is not a toll-free number). Hearing- or speech-impaired individuals may access this number through TTY by calling the toll-free Federal Information Relay Service at 1–(800) 877–8339.

*Paperwork Reduction Act*

The information collection requirements contained in this rule are currently approved by OMB under section 3504(h) of the Paperwork Reduction Act of 1980 (44 U.S.C. 3501–3520) and assigned OMB Control Number 2502–0253. An agency may not conduct or sponsor, and a person is not required to respond to a collection of information, unless the collection displays a currently valid control number.

*Unfunded Mandates Reform Act*

Title II of the Unfunded Mandates Reform Act of 1995 (2 U.S.C. 1531–1538) (UMRA) establishes requirements for federal agencies to assess the effects of their regulatory actions on state, local, and tribal governments, and on the private sector. This rule does not impose any federal mandate on any state, local, or tribal government, or on the private sector, within the meaning of UMRA.

*Environmental Review*

A Finding of No Significant Impact (FONSI) with respect to the environment was made at the proposed rule stage, in accordance with HUD regulations at 24 CFR part 50, which implement section 102(2)(C) of the National Environmental Policy Act of 1969 (42 U.S.C. 4332(2)(C)) and remains applicable to this final rule. The FONSI is available for public inspection during regular business hours in the Office of the Rules Docket Clerk, Office of General Counsel, Department of Housing and Urban Development, 451 Seventh Street, SW., Room 10276, Washington, DC 20410. Due to security measures at the HUD Headquarters building, please schedule an appointment to review the docket file by calling the Regulations Division at (202) 708–3055 (this is not a toll-free number). Hearing- or speech-impaired individuals may access this number through TTY by calling the toll-free Federal Information Relay Service at (800) 877–8339.

*Executive Order 13132, Federalism*

Executive Order 13132 (entitled ''Federalism'') prohibits, to the extent practicable and permitted by law, an agency from promulgating a regulation that has Federalism implications and either imposes substantial direct compliance costs on state and local governments and is not required by statute, or preempts state law, unless the relevant requirements of section 6 of the Executive Order are met. This rule does not have Federalism implications and does not impose substantial direct compliance costs on state and local governments or preempt state law within the meaning of the Executive Order.

HUD is required by statute to establish Model Manufactured Home Installation Standards through the National Manufactured Housing Construction and Safety Standards Act of 1974 (42 U.S.C. 5401–5426). However, in accordance with the language of the Act and as set forth in § 3285.1 of this rule, these Model Installation Standards are not preemptive, but rather establish minimum levels of protection to residents of manufactured homes.

The Model Installation Standards, without the implementing regulations to be developed for the federal installation program, establish requirements for installation instructions, but do not have an impact on state-based installation programs and standards. These minimum requirements do not affect governmental relationships or distribution of power. This rule does not establish any responsibilities for states and localities, but rather establishes minimum requirements to be used by home manufacturers in the design of manufactured home installation instructions. Therefore, HUD has determined that the Model Installation Standards, if adopted, have no federalism implications that warrant the preparation of a Federalism Assessment, in accordance with Executive Order 13132.

**Regulatory Flexibility Act**

The Regulatory Flexibility Act (5 U.S.C. 601 *et seq.*) requires that a regulation that has a significant economic impact on a substantial number of small entities, small businesses, or small organizations include an initial regulatory flexibility analysis describing the regulation's impact on small entities. Such an analysis need not be undertaken if the agency has certified that the regulation will not have a significant economic impact on a substantial number of small entities.

HUD has conducted a material and labor cost impact analysis for this rule. The completed cost analysis determines the cost difference between a typical installation conforming to the Model Installation Standards from an installation completed in accordance with current manufacturer installation instructions. A typical installation is defined by the traditional installation method consisting of concrete footings, masonry piers, and ground anchors. The cost difference was found to vary slightly depending upon whether the home is a single-section or multi-section home. HUD has determined the following recommended Installation Standards would potentially affect the cost of the installation of manufactured homes over and above the installation costs currently incurred using the manufacturer's installation instructions:

1. Manufacturer review and revision of its manufactured home installation manual (§ 3285.2).

2. Proper drainage slope away from the home (§ 3285.203).
3. Vapor barrier lap at joints (§ 3285.204).
4. Ensure proper configuration for concrete piers (§ 3285.304).
5. Ensure proper orientation and location of pier supports (§ 3285.306).
6. Certification and testing of ground anchors (§ 3285.402).
7. Water line shut-off valve (§ 3285.603).
8. Crossover duct collar hardware and fasteners (§ 3285.606).

The cost impact for a single-section home is determined to be about $133 per home and the cost impact for a multi-section home is determined to be about $151 per home. Current manufactured home production is about 135,000 homes, consisting of about 40,500 single-section homes and 94,500 multi-section homes. The combined average cost impact is determined to be approximately $145.60 per home multiplied by a total of 135,000 homes produced in a year; this totals about $19.6 million annually.

Based on a current installation cost of about $5,000 for a single-wide home, the $133 increase represents an increase of about 2.7 percent from the current cost of installing a single section home. Similarly, the current cost of installing a multi-section home is about $8,000. Therefore, the cost impact of $151 per multi-section home represents an increase of about 1.9 percent from the current cost. These estimated costs and cost impacts do not represent a significant economic effect on either an industry-wide or per-home basis. These estimates are further limited in the final rule by recognition of the manufacturer's installation instructions, including specific methods for performing an operation or assembly, as being deemed to comply with the Model Installation Standards and, as a result, may avoid the need to possibly change certain practices in existing instructions in order to comply with the installation standards.

This small increase in total cost associated with this rule would not impose a significant burden for a small business. The rule would regulate establishments primarily engaged in making manufactured homes (NAICS 32991) and the mobile home set-up and tie-down establishments (installers) included within the definition of all other special trade contractors (NAICS 23599). Of the 222 firms included under the NAICS 32991 definition, 198 are small manufacturers that fall below the small business threshold of 500 employees. Of the 31,320 firms included under NAICS 23599 definition, only 53 firms exceed the small business threshold of 500 employees and none of these are primarily mobile home set-up and tie-down establishments. The rule thus would affect a substantial number of small entities. However, the home manufacturers would only be subject to an associated labor cost necessary to revise its instructions, and the home installer would be subject to increased labor and material costs that would be passed through to the end user (manufactured home purchaser). Moreover, because the great majority of manufacturers and all installers are considered small entities, there would not be any disproportional impact on small entities. Therefore, although this rule would affect a substantial number of small entities, it would not have a significant economic impact on them. Further, the benefits to the consumer and public from the increase in cost may be summarized as follows:

- Under the new standards, substantial damage due to moisture infiltration will be mitigated, thereby avoiding repair and remedy that could cost the homeowner hundreds to thousands of dollars, depending upon the severity of the damage.
- The new standard will require proper configuration, location, and construction of piers to increase occupant and public safety.
- The new provisions for certification and testing of ground anchors has the potential to prevent occupant injury or death resulting from ground anchor installations that utilize insufficient or under-performing ground anchors.
- The new requirement for a water line shut-off valve provides both safety and convenience for the occupant. The absence of a water line shut-off valve can potentially cause hundreds to thousands of dollars in water damage.
- The new standard will require galvanized screws and galvanized collars to secure site-installed ducting to factory provided connectors, thereby providing for a durable and weather-protected connection that can withstand the elements without premature failure and replacement. Replacement of the connectors and fastenings per home can total about $30 per home, including $10 in materials cost and $20 in labor costs.
- The requirement for manufacturer review and revision of installation instructions and subsequent third-party approval of the installation instructions will provide a positive impact on occupant and general public safety.

The Secretary, in accordance with the Regulatory Flexibility Act (5 U.S.C. 605(b)), has reviewed and approved this rule and in so doing certifies that the rule would not have a significant economic impact on a substantial number of small entities. The rule does not provide an exemption for small entities. This rule does not establish any responsibilities for installers; rather, it establishes model requirements used by manufacturers in the design of manufactured home installation instructions.

*Catalogue of Federal Domestic Assistance*

The Catalogue of Federal Domestic Assistance number is 14.171.

**List of Subjects**

*24 CFR Part 3280*

Construction, Housing standards, Incorporation by reference, Manufactured homes, Safety.

*24 CFR Part 3285*

Housing standards, Incorporation by reference, Installation, Manufactured homes.

■ Accordingly, HUD amends 24 CFR part 3280 and adds 24 CFR part 3285 to read as follows:

## PART 3280—MANUFACTURED HOME CONSTRUCTION AND SAFETY STANDARDS

■ 1. The authority citation for 24 CFR part 3280 continues to read as follows:

**Authority:** 42 U.S.C. 3535(d), 5403, and 5424.

■ 2. In § 3280.302, add the definitions of anchor assembly, foundation system, and support system in alphabetical order and revise the definitions of anchoring equipment, anchoring system, diagonal tie, ground anchor, and stabilizing devices to read as follows:

### § 3280.302 Definitions.

* * * * *

*Anchor assembly* means any device or other means designed to transfer home anchoring loads to the ground.

*Anchoring equipment* means ties, straps, cables, turnbuckles, chains, and other approved components, including tensioning devices that are used to secure a manufactured home to anchor assemblies.

*Anchoring system* means a combination of anchoring equipment and anchor assemblies that will, when properly designed and installed, resist the uplift, overturning, and lateral forces on the manufactured home and on its support and foundation system.

*Diagonal tie* means a tie intended to resist horizontal or shear forces, but which may resist vertical, uplift, and overturning forces.

* * * * *

*Foundation system* means a system of support that is capable of transferring all

design loads to the ground, including elements of the support system as defined in this section, or a site-built permanent foundation that meets the requirements of 24 CFR 3282.12.

*Ground anchor* means a specific anchoring assembly device designed to transfer home anchoring loads to the ground.

* * * * *

*Stabilizing devices* means all components of the anchoring and support systems, such as piers, footings, ties, anchoring equipment, anchoring assemblies, or any other equipment, materials, and methods of construction that support and secure the manufactured home to the ground.

* * * * *

*Support system* means any pilings, columns, footings, piers, foundation walls, shims, and any combination thereof that, when properly installed, support the manufactured home.

■ 3. In § 3280.306, revise paragraphs (b)(2)(iii) and (iv) to read as follows:

**§ 3280.306 Windstorm protection.**

* * * * *

(b) * * *

(2) * * *

(iii) That ground anchors are to be embedded below the frost line, unless the foundation system is frost-protected in accordance with §§ 3285.312(b) and 3285.404 of the Model Manufactured Home Installation Standards in this chapter.

(iv) That ground anchors must be installed to their full depth, and stabilizer plates must be installed in accordance with the ground anchor listing or certification to provide required resistance to overturning and sliding.

* * * * *

■ 4. In Chapter XX, add part 3285 to read as follows:

## PART 3285—MODEL MANUFACTURED HOME INSTALLATION STANDARDS

### Subpart A—General

Sec.

3285.1 Administration.
3285.2 Manufacturer installation instructions.
3285.3 Alterations during initial installation.
3285.4 Incorporation by reference (IBR).
3285.5 Definitions.
3285.6 Final leveling of manufactured home.

**Subpart B—Pre-Installation Considerations**

3285.101 Fire separation.
3285.102 Installation of manufactured homes in flood hazard areas.
3285.103 Site suitability with design zone maps.
3285.104 Moving manufactured home to location.
3285.105 Permits, other alterations, and on-site structures.

**Subpart C—Site Preparation**

3285.201 Soil conditions.
3285.202 Soil classifications and bearing capacity.
3285.203 Site drainage.
3285.204 Ground moisture control.

**Subpart D—Foundations**

3285.301 General.
3285.302 Flood hazard areas.
3285.303 Piers.
3285.304 Pier configuration.
3285.305 Clearance under homes.
3285.306 Design procedures for concrete block piers.
3285.307 Perimeter support piers.
3285.308 Manufactured piers.
3285.309 [Reserved]
3285.310 Pier location and spacing.
3285.311 Required perimeter supports.
3285.312 Footings.
3285.313 Combination systems.
3285.314 [Reserved]
3285.315 Special snow load conditions.

**Subpart E—Anchorage Against Wind**

3285.401 Anchoring instructions.
3285.402 Ground anchor installations.
3285.403 Sidewall, over-the-roof, mate-line, and shear wall straps.
3285.404 Severe climatic conditions.
3285.405 Severe wind zones.
3285.406 Flood hazard areas.

**Subpart F—Optional Features**

3285.501 Home installation manual supplements.
3285.502 Expanding rooms.
3285.503 Optional appliances.
3285.504 Skirting.
3285.505 Crawlspace ventilation.

**Subpart G—Ductwork and Plumbing and Fuel Supply Systems**

3285.601 Field assembly.
3285.602 Utility connections.
3285.603 Water supply.
3285.604 Drainage system.
3285.605 Fuel supply system.
3285.606 Ductwork connections.

**Subpart H—Electrical Systems and Equipment**

3285.701 Electrical crossovers.
3285.702 Miscellaneous lights and fixtures.
3285.703 Smoke alarms.
3285.704 Telephone and cable TV.

**Subpart I—Exterior and Interior Close-Up**

3285.801 Exterior close-up.
3285.802 Structural interconnection of multi-section homes.
3285.803 Interior close-up.
3285.804 Bottom board repair.

**Subpart J—Optional Information for Manufacturer's Installation Instructions**

3285.901 General.
3285.902 Moving manufactured home to location.
3285.903 Permits, alterations, and on-site structures.
3285.904 Utility systems connection.
3285.905 Heating oil systems.
3285.906 Telephone and cable TV.
3285.907 Manufacturer additions to installation instructions.

**Authority:** 42 U.S.C. 3535(d), 5403, 5404, and 5424.

### Subpart A—General

**§ 3285.1 Administration.**

(a) *Scope.* These Model Installation Standards provide minimum requirements for the initial installation of new manufactured homes, in accordance with section 605 of the Act (42 U.S.C. 5404). The Model Installation Standards are one component of the Manufactured Home Installation Program in Part 3286 of this chapter, upon effect, and serve as the basis for developing the manufacturers' installation instructions required by § 3285.2 of this subpart. The manufacturer's installation instructions, including specific methods for performing a specific operation or assembly, will be deemed to comply with these Model Installation Standards, provided they meet or exceed the minimum requirements of these Model Installation Standards and do not take the home out of compliance with the Manufactured Home Construction and Safety Standards (24 CFR part 3280). Work necessary to join all sections of a multi-section home specifically identified in Subparts G, H, and I of this part, or work associated with connecting exterior lights, chain-hung light fixtures, or ceiling-suspended fans, as specifically identified in Subpart I, is not considered assembly or construction of the home, although the design of those elements of a manufactured home must comply with the Manufactured Home Construction and Safety Standards (MHCSS). However, work associated with the completion of hinged roofs and eaves in § 3285.801 and other work done on-site and not specifically identified in this part as close-up is considered construction and assembly and is subject to the requirements of the Manufactured Home Construction and Safety Standards (24 CFR part 3280) and the Manufactured Home Procedural and Enforcement Regulations (24 CFR part 3282).

(1) States that choose to operate an installation program for manufactured homes in lieu of the federal program must implement installation standards that provide protection to its residents that equals or exceeds the protection provided by these Model Installation Standards.

(2) In states that do not choose to operate their own installation program

for manufactured homes, these Model Installation Standards serve as the minimum standards for manufactured home installations.

(b) *Applicability.* The standards set forth herein have been established to accomplish certain basic objectives and are not to be construed as relieving manufacturers, retailers, installers, or other parties of responsibility for compliance with other applicable ordinances, codes, regulations, and laws. The manufactured homes covered by this standard must comply with requirements of the U.S. Department of Housing and Urban Development's (HUD) MHCSS Program, as set forth in 24 CFR part 3280, Manufactured Home Construction and Safety Standards, and 24 CFR part 3282, Manufactured Home Procedural and Enforcement Regulations, as well as with, upon effect, the Manufactured Home Installation Program, 24 CFR part 3286, and the Dispute Resolution Program, 24 CFR part 3288. The requirements of this part do not apply to homes installed on site-built permanent foundations when the manufacturer certifies the home in accordance with § 3282.12 of this chapter.

(c) *Consultation with the Manufactured Housing Consensus Committee.* The Secretary will seek input from the Manufactured Housing Consensus Committee (MHCC) when revising the installation standards in this part 3285. Before publication of a proposed rule to revise the installation standards, the Secretary will provide the MHCC with a 120-day opportunity to comment on such revision. The MHCC may send to the Secretary any of the MHCC's own recommendations to adopt new installation standards or to modify or repeal any of the installation standards in this part. Along with each recommendation, the MHCC must set forth pertinent data and arguments in support of the action sought. The Secretary will either:

(1) Accept or modify the recommendation and publish it for public comment in accordance with section 553 of the Administrative Procedure Act (5 U.S.C. 553), along with an explanation of the reasons for any such modification; or

(2) Reject the recommendation entirely, and provide to the MHCC a written explanation of the reasons for the rejection.

**§ 3285.2 Manufacturer installation instructions.**

(a) *Instructions required.* A manufacturer must provide with each new manufactured home, installation designs and instructions that have been approved by the Secretary or DAPIA. The approved installation instructions must include all topics covered in the Model Installation Standards for the installation of manufactured homes. These installation instructions and any variations thereto that are prepared to comply with paragraph (c) of this section must provide protection to residents of the manufactured homes that equals or exceeds the protection provided by these Model Installation Standards and must not take the manufactured home out of compliance with the MHCSS. These instructions must insure that each home will be supported and anchored in a manner that is capable of meeting or exceeding the design loads required by the MHCSS.

(b) *Professional engineer or registered architect certification.* A professional engineer or registered architect must prepare and certify that the manufacturer's installation instructions meet or exceed the Model Installation Standards for foundation support and anchoring whenever:

(1) The manufacturer's installation instructions do not conform in their entirety to the minimum requirements or tables or their conditions for foundation support and anchoring of this Standard; or

(2) An alternative foundation system or anchoring system is employed, including designs for basements and perimeter support foundation systems, whether or not it is included in the installation instructions; or

(3) Materials such as metal piers or alternatives to concrete footing materials are required by the installation instructions; or

(4) Foundation support and anchoring systems are designed for use in areas subject to freezing or for use in areas subject to flood damage or high seismic risk; or

(5) Foundations support and anchoring systems are designed to be used in special snow load conditions or in severe wind design areas; or

(6) Site conditions do not allow the use of the manufacturer's installation instructions; or

(7) There are any other circumstances in which the manufacturer's installation instructions would not permit the home to be installed in conformance with the Installation Standards or the MHCSS.

(c) *Variations to installation instructions.*

(1) Before an installer provides support or anchorage that are different than those methods specified in the manufacturer's installation instructions, or when the installer encounters site or other conditions (such as areas that are subject to flood damage or high seismic risk) that prevent the use of the instructions, the installer must:

(i) First attempt to obtain DAPIA-approved designs and instructions prepared by the manufacturer; or

(ii) If designs and instructions are not available from the manufacturer, obtain an alternate design prepared and certified by a registered professional engineer or registered architect for the support and anchorage of the manufactured home that is consistent with the manufactured home design, conforms to the requirements of the MHCSS, and has been approved by the manufacturer and the DAPIA.

(2) The manufacturer's installation instructions must include an explanation of the requirement in paragraph (c)(1) of this section.

(d) *Installer certification.* In making the certification of the installation required under part 3286 of this chapter, upon effect, an installer must certify that it completed the installation in compliance with either the manufacturer's instructions or with an alternate installation design and instructions that have been prepared by the manufacturer or prepared in compliance with paragraph (c) of this section.

(e) *Temporary storage.* The installation instructions must provide at least one method for temporarily supporting each transportable section of a manufactured home, to prevent structural and other damage to the structure, when those section(s) are temporarily sited at the manufacturer's facility, retailer's lot, or the home site.

**§ 3285.3 Alterations during initial installation.**

Additions, modifications, or replacement or removal of any equipment that affects the installation of the home made by the manufacturer, retailer, or installer prior to completion of the installation by an installer must equal or exceed the protections and requirements of these Model Installation Standards, the MHCSS (24 CFR part 3280) and the Manufactured Home Procedural and Enforcement Regulations (24 CFR part 3282). An alteration, as defined in § 3282.7 of this chapter, must not affect the ability of the basic manufactured home to comply with the MHCSS, and the alteration must not impose additional loads to the manufactured home or its foundation, unless the alteration is included in the manufacturer's DAPIA-approved designs and installation instructions, or is designed by a registered professional engineer or architect consistent with the manufacturer's design and that

conforms to the requirements of the MHCSS.

**§ 3285.4 Incorporation by reference (IBR).**

(a) The materials listed in this section are incorporated by reference in the corresponding sections noted. These incorporations by reference were approved by the Director of the **Federal Register**, in accordance with 5 U.S.C. 552(a) and 1 CFR part 51. The materials are available for purchase at the corresponding addresses noted below, and all are available for inspection at the Office of Manufactured Housing Programs, U.S. Department of Housing and Urban Development, 451 Seventh Street, SW., Room 9164, Washington, DC 20410; or the National Archives and Records Administration (NARA). For information on the availability of this material at NARA, call (202) 741–6030, or go to: *http://www.archives.gov/federal-register/cfr/ibr-locations.html.*

(b) The materials listed below are available for purchase from the Air Conditioning Contractors of America (ACCA), 2800 Shirlington Road, Suite 300, Arlington, Virginia 22206.

(1) ACCA Manual J, Residential Load Calculation, 8th Edition, IBR approved for § 3285.503(a)(1)(i)(A).

(2) [Reserved]

(c) The materials listed below are available for purchase from APA—The Engineered Wood Association, 7011 South 19th Street, Tacoma, Washington 98411, telephone number (253) 565–6600, fax number (253) 565–7265.

(1) PS1–95, Construction and Industrial Plywood (with typical APA trademarks), 1995 edition, IBR approved for § 3285.312(a)(2)(i).

(2) [Reserved]

(d) The materials listed below are available for purchase from American Society of Heating, Refrigerating and Air Conditioning Engineers (ASHRAE), 1791 Tullie Circle, NE., Atlanta, Georgia 30329–2305.

(1) ASHRAE Handbook of Fundamentals, 1997 Inch-Pound Edition, IBR approved for § 3285.503(a)(1)(i)(A).

(2) [Reserved]

(e) The materials listed below are available for purchase from American Society for Testing and Materials (ASTM), 100 Barr Harbor Drive, West Conshohocken, Pennsylvania 19428–2959.

(1) ASTM C 90–02a, Standard Specification for Loadbearing Concrete Masonry Units, 2002, IBR approved for § 3285.312(a)(1)(i).

(2) ASTM D 1586–99, Standard Test Method for Penetration Test and Split-Barrel Sampling of Soils, 1999, IBR approved for the table at § 3285.202(c).

(3) ASTM D 2487–00, Standard Practice for Classification of Soils for Engineering Purposes (Unified Soil Classification System), 2000, IBR approved for the table at § 3285.202(c).

(4) ASTM D 2488–00, Standard Practice for Description and Identification of Soils (Visual-Manual Procedure), 2000, IBR approved for the table at § 3285.202(c).

(5) ASTM D 3953–97, Standard Specification for Strapping, Flat Steel and Seals, 1997, IBR approved for § 3285.402(b)(2) and Note 10 to Table 1 to § 3285.402.

(f) The materials listed below are available for purchase from American Wood-Preservers' Association (AWPA), P.O. Box 388, Selma, Alabama 36702.

(1) AWPA M4–02, Standard for the Care of Preservative-Treated Wood Products, 2002, IBR approved for § 3285.312(a)(2)(iii).

(2) AWPA U1–04, Use Category System; User Specification for Treated Wood, 2004, IBR approved for §§ 3285.303(b)(1), 3285.312(a)(2)(ii), and 3285.504(c).

(g) The materials listed below are available for purchase from the Federal Emergency Management Administration (FEMA), 500 C Street, SW., Washington, DC 20472.

(1) FEMA 85/September 1985, Manufactured Home Installation in Flood Hazard Areas, 1985, IBR approved for § 3285.102(d)(3).

(2) [Reserved]

(h) The materials listed below are available for purchase from the National Fire Protection Association (NFPA), 1 Batterymarch Park, Quincy, Massachusetts 02169–7471.

(1) NFPA 31, Standard for the Installation of Oil Burning Equipment, 2001 edition, IBR approved for §§ 3285.905(a) and 3285.905(d)(3).

(2) NFPA 70, National Electrical Code, 2005 edition, IBR approved for §§ 3285.702(e)(1) and 3285.906.

(3) NFPA 501A, Standard for Fire Safety Criteria for Manufactured Home Installations, Sites, and Communities, 2003 edition, IBR approved for § 3285.101.

(i) The materials listed below are available for purchase from the Structural Engineering Institute/American Society of Civil Engineers (SEI/ASCE), 1801 Alexander Bell Drive, Reston, Virginia 20191.

(1) SEI/ASCE 32–01, Design and Construction of Frost-Protected Shallow Foundations, 2001, IBR approved for §§ 3285.312(b)(2)(ii) and 3285.312(b)(3)(ii).

(2) [Reserved]

(j) The materials listed below are available for purchase from Underwriters Laboratories (UL), 333 Pfingsten Road, Northbrook, Illinois 60062.

(1) UL 181A, Closure Systems for Use With Rigid Air Ducts and Air Connectors, 1994, with 1998 revisions, IBR approved for § 3285.606(a).

(2) UL 181B, Closure Systems for Use With Flexible Air Ducts and Air Connectors, 1995, with 1998 revisions, IBR approved for § 3285.606(a).

**§ 3285.5 Definitions.**

The definitions contained in this section apply to the terms used in these Model Installation Standards. Where terms are not included, common usage of the terms applies. The definitions are as follows:

*Act.* The National Manufactured Housing Construction and Safety Standards Act of 1974, 42 U.S.C. 5401–5426.

*Anchor assembly.* Any device or other means designed to transfer home anchoring loads to the ground.

*Anchoring equipment.* Ties, straps, cables, turnbuckles, chains, and other approved components, including tensioning devices that are used to secure a manufactured home to anchor assemblies.

*Anchoring system.* A combination of anchoring equipment and anchor assemblies that will, when properly designed and installed, resist the uplift, overturning, and lateral forces on the manufactured home and on its support and foundation system.

*Approved.* When used in connection with any material, appliance or construction, means complying with the requirements of the Department of Housing and Urban Development.

*Arid region.* An area subject to 15 inches or less of annual rainfall.

*Base flood.* The flood having a one percent chance of being equaled or exceeded in any given year.

*Base flood elevation (BFE).* The elevation of the base flood, including wave height, relative to the datum specified on a LAHJ's flood hazard map.

*Comfort cooling certificate.* A certificate permanently affixed to an interior surface of the home specifying the factory design and preparations for air conditioning the manufactured home.

*Crossovers.* Utility interconnections in multi-section homes that are located where the sections are joined. Crossover connections include heating and cooling ducts, electrical circuits, water pipes, drain plumbing, and gas lines.

*Design Approval Primary Inspection Agency (DAPIA).* A state or private organization that has been accepted by the Secretary in accordance with the

requirements of Part 3282, Subpart H of this chapter, which evaluates and approves or disapproves manufactured home designs and quality control procedures.

*Diagonal tie.* A tie intended to resist horizontal or shear forces, but which may resist vertical, uplift, and overturning forces.

*Flood hazard area.* The greater of either: The special flood hazard area shown on the flood insurance rate map; or the area subject to flooding during the design flood and shown on a LAHJ's flood hazard map, or otherwise legally designated.

*Flood hazard map.* A map delineating the flood hazard area and adopted by a LAHJ.

*Footing.* That portion of the support system that transmits loads directly to the soil.

*Foundation system.* A system of support that is capable of transferring all design loads to the ground, including elements of the support system, as defined in this section, or a site-built permanent foundation that meets the requirements of 24 CFR 3282.12.

*Ground anchor.* A specific anchoring assembly device designed to transfer home anchoring loads to the ground.

*Installation instructions.* DAPIA-approved instructions provided by the home manufacturer that accompany each new manufactured home and detail the home manufacturer requirements for support and anchoring systems, and other work completed at the installation site to comply with these Model Installation Standards and the Manufactured Home Construction and Safety Standards in 24 CFR part 3280.

*Installation standards.* Reasonable specifications for the installation of a new manufactured home, at the place of occupancy, to ensure proper siting; the joining of all sections of the home; and the installation of stabilization, support, or anchoring systems.

*Labeled.* A label, symbol, or other identifying mark of a nationally recognized testing laboratory, inspection agency, or other organization concerned with product evaluation that maintains periodic inspection of production of labeled equipment or materials, and by whose labeling is indicated compliance with nationally recognized standards or tests to determine suitable usage in a specified manner.

*Listed or certified.* Included in a list published by a nationally recognized testing laboratory, inspection agency, or other organization concerned with product evaluation that maintains periodic inspection of production of listed equipment or materials, and whose listing states either that the equipment or material meets nationally recognized standards or has been tested and found suitable for use in a specified manner.

*Local authority having jurisdiction (LAHJ).* The state, city, county, city and county, municipality, utility, or organization that has local responsibilities and requirements that must be complied with during the installation of a manufactured home.

*Lowest floor.* The floor of the lowest enclosed area of a manufactured home. An unfinished or flood-resistant enclosure, used solely for vehicle parking, home access, or limited storage, must not be considered the lowest floor, provided the enclosed area is not constructed so as to render the home in violation of the flood-related provisions of this standard.

*Manufactured home.* A structure, transportable in one or more sections, which in the traveling mode is 8 body feet or more in width or 40 body feet or more in length, or which when erected on site is 320 or more square feet, and which is built on a permanent chassis and designed to be used as a dwelling with or without a permanent foundation when connected to the required utilities, and includes the plumbing, heating, air-conditioning, and electrical systems contained in the structure. This term includes all structures that meet the above requirements, except the size requirements and with respect to which the manufacturer voluntarily files a certification, pursuant to § 3282.13 of this chapter, and complies with the MHCSS set forth in part 3280 of this chapter. The term does not include any self-propelled recreational vehicle. Calculations used to determine the number of square feet in a structure will include the total of square feet for each transportable section comprising the completed structure and will be based on the structure's exterior dimensions measured at the largest horizontal projections when erected on-site. These dimensions will include all expandable rooms, cabinets, and other projections containing interior space, but do not include bay windows. Nothing in this definition should be interpreted to mean that a manufactured home necessarily meets the requirements of HUD's Minimum Property Standards (HUD Handbook 4900.1) or that it is automatically eligible for financing under 12 U.S.C. 1709(b) certification.

*Manufactured Home Construction and Safety Standards or MHCSS.* The Manufactured Home Construction and Safety Standards established in part 3280 of this chapter, pursuant to section 604 of the Act, 42 U.S.C. 5403.

*Manufactured home gas supply connector.* A listed connector designed for connecting the manufactured home to the gas supply source.

*Manufactured home site.* A designated parcel of land designed for the installation of one manufactured home for the exclusive use of the occupants of the home.

*Manufactured Housing Consensus Committee or MHCC.* The consensus committee established pursuant to section 604(a)(3) of the Act, 42 U.S.C. 5403(a)(3).

*Model Installation Standards.* The installation standards established in part 3285 of this chapter, pursuant to section 605 of the Act, 42 U.S.C. 5404.

*Pier.* That portion of the support system between the footing and the manufactured home, exclusive of shims. Types of piers include, but are not limited to: Manufactured steel stands; pressure-treated wood; manufactured concrete stands; concrete blocks; and portions of foundation walls.

*Ramada.* Any freestanding roof or shade structure, installed or erected above a manufactured home or any portion thereof.

*Secretary.* The Secretary of Housing and Urban Development, or an official of HUD delegated the authority of the Secretary with respect to the Act.

*Skirting.* A weather-resistant material used to enclose the perimeter, under the living area of the home, from the bottom of the manufactured home to grade.

*Stabilizing devices.* All components of the anchoring and support systems, such as piers, footings, ties, anchoring equipment, anchoring assemblies, or any other equipment, materials, and methods of construction, that support and secure the manufactured home to the ground.

*State.* Each of the several states, the District of Columbia, the Commonwealth of Puerto Rico, Guam, the Virgin Islands, and American Samoa.

*Support system.* Pilings, columns, footings, piers, foundation walls, shims, and any combination thereof that, when properly installed, support the manufactured home.

*Tie.* Straps, cable, or securing devices used to connect the manufactured home to anchoring assemblies.

*Ultimate load.* The absolute maximum magnitude of load that a component or system can sustain, limited only by failure.

*Utility connection.* The connection of the manufactured home to utilities that include, but are not limited to, electricity, water, sewer, gas, or fuel oil.

*Vertical tie.* A tie intended to resist uplifting and overturning forces.

*Wind zone.* The areas designated on the Basic Wind Zone Map, as further defined in § 3280.305(c) of the Manufactured Home Construction and Safety Standards in this chapter, which delineate the wind design load requirements.

*Working load.* The maximum recommended load that may be exerted on a component or system determined by dividing the ultimate load of a component or system by an appropriate factor of safety.

#### § 3285.6 Final leveling of manufactured home.

The manufactured home must be adequately leveled prior to completion of the installation, so that the home's performance will not be adversely affected. The home will be considered adequately leveled if there is no more than ¼ inch difference between adjacent pier supports (frame or perimeter) and the exterior doors and windows of the home do not bind and can be properly operated.

### Subpart B—Pre-Installation Considerations

#### § 3285.101 Fire separation.

Fire separation distances must be in accordance with the requirements of Chapter 6 of NFPA 501A, 2003 edition (incorporated by reference, see § 3285.4) or the requirements of the LAHJ. The installation instructions must clearly indicate this requirement in a separate section and must caution installers to take into account any local requirements on fire separation.

#### § 3285.102 Installation of manufactured homes in flood hazard areas.

(a) *Definitions.* Except to the extent otherwise defined in Subpart A, the terms used in this subpart are as defined in 44 CFR 59.1 of the National Flood Insurance Program (NFIP) regulations.

(b) *Applicability.* The provisions of this section apply to the initial installation of new manufactured homes located wholly or partly within a flood hazard area.

(c) *Pre-installation considerations.* Prior to the initial installation of a new manufactured home, the installer is responsible for determining whether the manufactured home site lies wholly or partly within a special flood hazard area as shown on the LAHJ's Flood Insurance Rate Map, Flood Boundary and Floodway Map, or Flood Hazard Boundary Map, or if no LAHJ, in accordance with NFIP regulations. If so located, and before an installation method is agreed upon, the map and supporting studies adopted by the LAHJ must be used to determine the flood hazard zone and base flood elevation at the site.

(d) *General elevation and foundation requirements.*

(1) *Methods and practices.* Manufactured homes located wholly or partly within special flood hazard areas must be installed on foundations engineered to incorporate methods and practices that minimize flood damage during the base flood, in accordance with the requirements of the LAHJ, 44 CFR 60.3(a) through (e), and other provisions of 44 CFR referenced by those paragraphs.

(2) *Outside appliances.*

(i) Appliances installed on the manufactured home site in flood hazard areas must be anchored and elevated to or above the same elevation as the lowest elevation of the lowest floor of the home.

(ii) Appliance air inlets and exhausts in flood hazard areas must be located at or above the same elevation as the lowest elevation of the lowest floor of the home.

(3) *Related guidance.* Refer to FEMA 85/September 1985, Manufactured Home Installation in Flood Hazard Areas, 1985 (incorporated by reference, see § 3285.4).

#### § 3285.103 Site suitability with design zone maps.

Prior to the initial installation of a new manufactured home and as part of making the certification of the installation required under part 3286, upon effect, the installer is to verify that the design and construction of the manufactured home, as indicated on the design zone maps provided with the home, are suitable for the site location where the home is to be installed. The design zone maps are those identified in part 3280 of this chapter.

(a) *Wind zone.* Manufactured homes must not be installed in a wind zone that exceeds the design wind loads for which the home has been designed, as evidenced by the wind zone indicated on the home's data plate and as further defined by counties or local governments within affected states, as applicable, in § 3280.305(c)(2) of the Manufactured Home Construction and Safety Standards in this chapter.

(b) *Roof load zone.* Manufactured homes must not be located in a roof load zone that exceeds the design roof load for which the home has been designed, as evidenced by the roof load zone indicated on the home's data plate and as further defined by counties or local governments within affected states, as applicable, in § 3280.305(c)(3) of the Manufactured Home Construction and Safety Standards in this chapter. Refer to § 3285.315 for Special Snow Load Conditions.

(c) *Thermal zone.* Manufactured homes must not be installed in a thermal zone that exceeds the thermal zone for which the home has been designed, as evidenced by the thermal zone indicated on the heating/cooling certificate and insulation zone map and as further defined by counties or local governments within affected states, as applicable, in § 3280.504(b)(5) of the Manufactured Home Construction and Safety Standards in this chapter. The manufacturer may provide the heating/cooling information and insulation zone map on the home's data plate.

#### § 3285.104 Moving manufactured home to location.

Refer to § 3285.902 for considerations related to moving the manufactured home to the site of installation.

#### § 3285.105 Permits, other alterations, and on-site structures.

Refer to § 3285.903 for considerations related to permitting, other alterations, and on-site structures.

### Subpart C—Site Preparation

#### § 3285.201 Soil conditions.

To help prevent settling or sagging, the foundation must be constructed on firm, undisturbed soil or fill compacted to at least 90 percent of its maximum relative density. All organic material such as grass, roots, twigs, and wood scraps must be removed in areas where footings are to be placed. After removal of organic material, the home site must be graded or otherwise prepared to ensure adequate drainage, in accordance with § 3285.203.

#### § 3285.202 Soil classifications and bearing capacity.

The soil classification and bearing capacity of the soil must be determined before the foundation is constructed and anchored. The soil classification and bearing capacity must be determined by one or more of the following methods, unless the soil bearing capacity is established as permitted in paragraph (f) of this section:

(a) *Soil tests.* Soil tests that are in accordance with generally accepted engineering practice; or

(b) *Soil records.* Soil records of the applicable LAHJ; or

(c) *Soil classifications and bearing capacities.* If the soil class or bearing capacity cannot be determined by test or soil records, but its type can be identified, the soil classification, allowable pressures, and torque values shown in Table to § 3285.202 may be used.

(d) A pocket penetrometer; or

(e) In lieu of determining the soil bearing capacity by use of the methods shown in the table, an allowable pressure of 1,500 psf may be used, unless the site-specific information requires the use of lower values based on soil classification and type.

(f) If the soil appears to be composed of peat, organic clays, or uncompacted fill, or appears to have unusual conditions, a registered professional geologist, registered professional engineer, or registered architect must determine the soil classification and maximum allowable soil bearing capacity.

TABLE TO § 3285.202

| Soil classification | | Soil description | Allowable soil bearing pressure (psf) [1] | Blow count ASTM D 1586–99 | Torque probe [3] value [4] (inch-pounds)- |
|---|---|---|---|---|---|
| Classification number | ASTM D 2487–00 or D 2488–00 (incorporated by reference, see § 3285.4) | | | | |
| 1 | | Rock or hard pan | 4000+ | | |
| 2 | GW, GP, SW, SP, GM, SM. | Sandy gravel and gravel; very than dense and/or cemented sands; course gravel/cobbles; preloaded silts, clays and coral. | 2000 | 40+ | More than 550. |
| 3 | GC, SC, ML, CL | Sand; silty sand; clayey sand; silty gravel; medium dense course sands; sandy gravel; and very stiff silt, sand clays. | 1500 | 24–39 | 351–550. |
| 4A | CG, MH [2] | Loose to medium dense sands; firm to stiff clays and silts; alluvial fills. | 1000 | 18–23 | 276–350. |
| 4B | CH, MH [2] | Loose sands; firm clays; alluvial fills | 1000 | 12–17 | 175–275. |
| 5 | OL, OH, PT | Uncompacted fill; peat; organic clays | Refer to 3285.202(e) | 0–11 | Less than 175. |

Notes:

[1] The values provided in this table have not been adjusted for overburden pressure, embedment depth, water table height, or settlement problems.

[2] For soils classified as CH or MH, without either torque probe values or blow count test results, selected anchors must be rated for a 4B soil.

[3] The torque test probe is a device for measuring the torque value of soils to assist in evaluating the holding capacity of the soil in which the ground anchor is placed. The shaft must be of suitable length for the full depth of the ground anchor.

[4] The torque value is a measure of the load resistance provided by the soil when subject to the turning or twisting force of the probe.

**§ 3285.203 Site Drainage.**

(a) *Purpose.* Drainage must be provided to direct surface water away from the home to protect against erosion of foundation supports and to prevent water build-up under the home, as shown in Figure to § 3285.203.

(b) The home site must be graded as shown in Figure to § 3285.203, or other methods, such as a drain tile and automatic sump pump system, must be provided to remove any water that may collect under the home.

(c) All drainage must be diverted away from the home and must slope a minimum of one-half inch per foot away from the foundation for the first ten feet. Where property lines, walls, slopes, or other physical conditions prohibit this slope, the site must be provided with drains or swales or otherwise graded to drain water away from the structure, as shown in Figure to § 3285.203.

(d) *Sloped site considerations.* The home, where sited, must be protected from surface runoff from the surrounding area.

(e) Refer to § 3285.902 regarding the use of drainage structures to drain surface runoff.

(f) *Gutters and downspouts.* Manufacturers must specify in their installation instructions whether the home is suitable for the installation of gutters and downspouts. If suitable, the installation instructions must indicate that when gutters and downspouts are installed, the runoff must be directed away from the home.

BILLING CODE 4210–07–P

**Figure to § 3285.203 - Grading and drainage.**

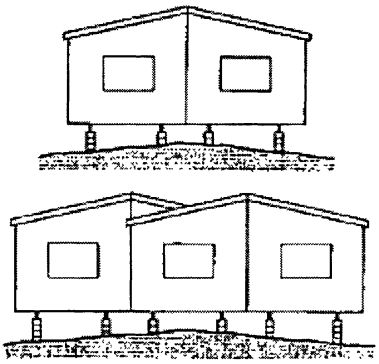

Crown and grade site to slope away from the home

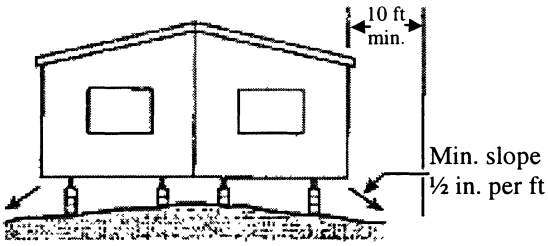


Home sites must be prepared so that there will be no depressions in which surface water may accumulate beneath the home. The area of the site covered by the manufactured home must be graded, sloped, or designed to provide drainage from beneath the home or to the property line.

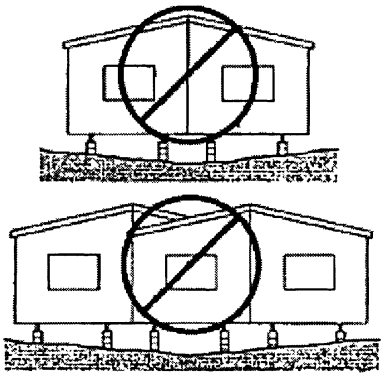

Do not grade site or set the home so that water collects beneath the home.

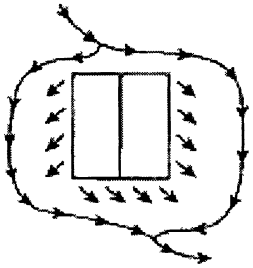

Natural drainage must be diverted around and away from the home.

**§ 3285.204 Ground moisture control.**

(a) *Vapor retarder.* If the space under the home is to be enclosed with skirting or other materials, a vapor retarder must be installed to cover the ground under the home, unless the home is installed in an arid region with dry soil conditions.

(b) *Vapor retarder material.* A minimum of six mil polyethylene sheeting or its equivalent must be used.

(c) *Proper installation.* (1) The entire area under the home must be covered with the vapor retarder, as noted in § 3285.204(a), except for areas under open porches, decks, and recessed entries. Joints in the vapor retarder must be overlapped at least 12 inches.

(2) The vapor retarder may be placed directly beneath footings, or otherwise installed around or over footings placed at grade, and around anchors or other obstructions.

(3) Any voids or tears in the vapor retarder must be repaired. At least one repair method must be provided in the manufacturer's installation instructions.

## Subpart D—Foundations

**§ 3285.301 General.**

(a) Foundations for manufactured home installations must be designed and constructed in accordance with this subpart and must be based on site conditions, home design features, and the loads the home was designed to withstand, as shown on the home's data plate.

(b) Foundation systems that are not pier and footing type configurations may be used when verified by engineering data and designed in accordance with § 3285.301(d), consistent with the design loads of the MHCSS. Pier and footing specifications that are different than those provided in this subpart, such as block size, metal piers, section width, loads, and spacing, may be used when verified by engineering data that comply with §§ 3285.301(c) and (d) and are capable of resisting all design loads of the MHCSS.

(c) All foundation details, plans, and test data must be designed and certified by a registered professional engineer or registered architect, and must not take the home out of compliance with the MHCSS. (See 3285.2)

(d) Alternative foundation systems or designs are permitted in accordance with either of the following:

(1) Systems or designs must be manufactured and installed in accordance with their listings by a nationally recognized testing agency, based on a nationally recognized testing protocol; or

(2) System designs must be prepared by a professional engineer or a registered architect or tested and certified by a professional engineer or registered architect in accordance with acceptable engineering practice and must be manufactured and installed so as not to take the home out of compliance with the Manufactured Home Construction and Safety Standards (part 3280 of this chapter).

**§ 3285.302 Flood hazard areas.**

In flood hazard areas, foundations, anchorings, and support systems must be capable of resisting loads associated with design flood and wind events or combined wind and flood events, and homes must be installed on foundation supports that are designed and anchored to prevent floatation, collapse, or lateral movement of the structure. Manufacturer's installation instructions must indicate whether:

(a) The foundation specifications have been designed for flood-resistant considerations, and, if so, the conditions of applicability for velocities, depths, or wave action; or

(b) The foundation specifications are not designed to address flood loads.

**§ 3285.303 Piers.**

(a) *General.* The piers used must be capable of transmitting the vertical live and dead loads to the footings or foundation.

(b) *Acceptable piers—materials specification.*

(1) Piers are permitted to be concrete blocks; pressure-treated wood with a water borne preservative, in accordance with AWPA Standard U1–04 (incorporated by reference, see § 3285.4) for Use Category 4B ground contact applications; or adjustable metal or concrete piers.

(2) Manufactured piers must be listed or labeled for the required vertical load capacity, and, where required by design, for the appropriate horizontal load capacity.

(c) *Design requirements.*

(1) *Load-bearing capacity.* The load bearing capacity for each pier must be designed to include consideration for the dimensions of the home, the design dead and live loads, the spacing of the piers, and the way the piers are used to support the home.

(2) Center beam/mating wall support must be required for multi-section homes and designs must be consistent with Tables 2 and 3 to § 3285.303 and Figures A, B, and C to § 3285.310.

(d) *Pier loads.*

(1) Design support configurations for the pier loads, pier spacing, and roof live loads must be in accordance with Tables 1, 2, and 3 to § 3285.303 and the MHCSS. Other pier designs are permitted in accordance with the provisions of this subpart.

(2) Manufactured piers must be rated at least to the loads required to safely support the dead and live loads, as required by § 3285.301, and the installation instructions for those piers must be consistent with Tables 1, 2, and 3 to this section.

TABLE 1 TO § 3285.303—FRAME BLOCKING ONLY/PERIMETER SUPPORT NOT REQUIRED EXCEPT AT OPENINGS

| Pier spacing | Roof live load (psf) | Location | Load (lbs.) |
|---|---|---|---|
| 4 ft. 0 in. | 20 | Frame | 2,900 |
| | 30 | Frame | 3,300 |
| | 40 | Frame | 3,600 |
| 6 ft. 0 in. | 20 | Frame | 4,200 |
| | 30 | Frame | 4,700 |
| | 40 | Frame | 5,200 |
| 8 ft. 0 in. | 20 | Frame | 5,500 |
| | 30 | Frame | 6,200 |
| | 40 | Frame | 6,900 |
| 10 ft. 0 in. | 20 | Frame | 6,800 |
| | 30 | Frame | 7,600 |

TABLE 1 TO § 3285.303—FRAME BLOCKING ONLY/PERIMETER SUPPORT NOT REQUIRED EXCEPT AT OPENINGS

| Pier spacing | Roof live load (psf) | Location | Load (lbs.) |
|---|---|---|---|
| | 40 | Frame | 8,500 |

**Notes:**

1. See Table to § 3285.312 for cast-in-place footing design by using the noted loads.
2. Table 1 is based on the following design assumptions: maximum 16 ft. nominal section width (15 ft. actual width), 12'' eave, 10'' I-beam size, 300 lbs. pier dead load, 10 psf roof dead load, 6 psf floor dead load, 35 plf wall dead load, and 10 plf chassis dead load.
3. Interpolation for other pier spacing is permitted.
4. The pier spacing and loads shown in the above table do not consider flood or seismic loads and are not intended for use in flood or seismic hazard areas. In those areas, the foundation support system is to be designed by a professional engineer or architect.
5. See Table to § 3285.312 for sizing of footings.

TABLE 2 TO § 3285.303—FRAME PLUS PERIMETER BLOCKING/PERIMETER BLOCKING REQUIRED

| Maximum pier spacing | Roof live load (psf) | Location | Load (lbs.) |
|---|---|---|---|
| 4 ft. 0 in. | 20 | Frame | 1,400 |
| | | Perimeter | 1,900 |
| | | Mating | 3,200 |
| 4 ft. 0 in. | 30 | Frame | 1,400 |
| | | Perimeter | 2,300 |
| | | Mating | 3,800 |
| 4 ft. 0 in. | 40 | Frame | 1,400 |
| | | Perimeter | 2,600 |
| | | Mating | 4,400 |
| 6 ft. 0 in. | 20 | Frame | 1,900 |
| | | Perimeter | 2,700 |
| | | Mating | 4,700 |
| 6 ft. 0 in. | 30 | Frame | 1,900 |
| | | Perimeter | 3,200 |
| | | Mating | 5,600 |
| 6 ft. 0 in. | 40 | Frame | 1,900 |
| | | Perimeter | 3,700 |
| | | Mating | 6,500 |
| 8 ft. 0 in. | 20 | Frame | 2,400 |
| | | Perimeter | 3,500 |
| | | Mating | 6,100 |
| 8 ft. 0 in. | 30 | Frame | 2,400 |
| | | Perimeter | 4,200 |
| | | Mating | 7,300 |
| 8 ft. 0 in. | 40 | Frame | 2,400 |
| | | Perimeter | 4,800 |
| | | Mating | 8,500 |
| 10 ft. 0 in. | 20 | Frame | 2,900 |
| | | Perimeter | 4,300 |
| | | Mating | 7,600 |
| 10 ft. 0 in. | 30 | Frame | 2,900 |
| | | Perimeter | 5,100 |
| | | Mating | 9,100 |
| 10 ft. 0 in. | 40 | Frame | 2,900 |
| | | Perimeter | 6,000 |
| | | Mating | 10,600 |

**Notes:**

1. See Table to § 3285.312 for cast-in-place footing design by using the noted loads.
2. Mating wall perimeter piers and footings only required under full height mating walls supporting roof loads. Refer to Figures A and B to § 3285.310.
3. Table 2 is based on the following design assumptions: maximum 16 ft. nominal section width (15 ft. actual width), 12'' eave, 10'' I-beam size, 300 lbs. pier dead load, 10 psf roof dead load, 6 psf floor dead load, 35 plf wall dead load, and 10 plf chassis dead load.

4. Interpolation for other pier spacing is permitted.

5. The pier spacing and loads shown in the above table do not consider flood or seismic loads and are not intended for use in flood or seismic hazard areas. In those areas, the foundation support system is to be designed by a professional engineer or architect.

6. See Table to § 3285.312 for sizing of footings.

TABLE 3 TO § 3285.303—RIDGE BEAM SPAN FOOTING CAPACITY

| Mating wall opening (ft) | Roof live load (psf) | Pier and footing load (lbs.) |
|---|---|---|
| 5 | 20 | 1,200 |
| | 30 | 1,600 |
| | 40 | 1,900 |
| 10 | 20 | 2,300 |
| | 30 | 3,100 |
| | 40 | 3,800 |
| 15 | 20 | 3,500 |
| | 30 | 4,700 |
| | 40 | 5,800 |
| 20 | 20 | 4,700 |
| | 30 | 6,200 |
| | 40 | 7,500 |
| 25 | 20 | 5,800 |
| | 30 | 7,800 |
| | 40 | 9,700 |
| 30 | 20 | 7,000 |
| | 30 | 9,300 |
| | 40 | 11,600 |
| 35 | 20 | 8,100 |
| | 30 | 10,900 |
| | 40 | 13,600 |

**Notes:**

1. See Table to § 3285.312 for cast-in-place footing design by using the noted loads.

2. Table 3 is based on the following design assumptions: maximum 16 ft. nominal section width (15 ft. actual width), 10″ I-beam size, 300 lbs. pier dead load, 10 psf roof dead load, 6 psf floor dead load, 35 plf wall dead load, and 10 plf chassis dead load.

3. Loads listed are maximum column loads for each section of the manufactured home.

4. Interpolation for maximum allowable pier and column loads is permitted for mate-line openings between those shown in the table.

5. The pier spacing and loads shown in the above table do not consider flood or seismic loads and are not intended for use in flood or seismic hazard areas. In those areas, the foundation support system must be designed by a professional engineer or registered architect.

6. See Table to § 3285.312 for sizing of footings.

**§ 3285.304 Pier configuration.**

(a) *Concrete blocks.* Installation instructions for concrete block piers must be developed in accordance with the following provisions and must be consistent with Figures A and B to § 3285.306.

(1) Load-bearing (not decorative) concrete blocks must have nominal dimensions of at least 8 inches × 8 inches × 16 inches;

(2) The concrete blocks must be stacked with their hollow cells aligned vertically; and

(3) When piers are constructed of blocks stacked side-by-side, each layer must be at right angles to the preceding one, as shown in Figure B to § 3285.306.

(b) *Caps.* (1) Structural loads must be evenly distributed across capped-hollow block piers, as shown in Figures A and B to § 3285.306.

(2) Caps must be solid concrete or masonry at least 4 inches in nominal thickness, or hardboard lumber at least 2 inches nominal in thickness; or be corrosion-protected minimum one-half inch thick steel; or be of other listed materials.

(3) All caps must be of the same length and width as the piers on which they rest.

(4) When split caps are used on double-stacked blocks, the caps must be installed with the long dimension across the joint in the blocks below.

(c) *Gaps.* Any gaps that occur during installation between the bottom of the main chassis beam and foundation support system must be filled by:

(1) Nominal 4 inch × 6 inch × 1 inch shims to level the home and fill any gaps between the base of the main chassis beam and the top of the pier cap;

(2) Shims must be used in pairs, as shown in Figures A and B to § 3285.306, and must be driven in tightly so that they do not occupy more than one inch of vertical height; and

(3) Hardwood plates no thicker than 2 inches nominal in thickness or 2 inch or 4 inch nominal concrete block must be used to fill in any remaining vertical gaps.

(d) *Manufactured pier heights.* Manufactured pier heights must be selected so that the adjustable risers do not extend more than 2 inches when finally positioned.

**§ 3285.305 Clearance under homes.**

A minimum clearance of 12 inches must be maintained between the lowest member of the main frame (I-beam or channel beam) and the grade under all areas of the home.

**§ 3285.306 Design procedures for concrete block piers.**

(a) *Frame piers less than 36 inches high.*

(1) Frame piers less than 36 inches high are permitted to be constructed of single, open, or closed-cell concrete blocks, 8 inches ‘‘ 8 inches ‘‘ 16 inches, when the design capacity of the block is not exceeded.

(2) The frame piers must be installed so that the long sides are at right angles to the supported I-beam, as shown in Figure A to this section.

(3) The concrete blocks must be stacked with their hollow cells aligned vertically and must be positioned at right angles to the footings.

(4) Horizontal offsets from the top to the bottom of the pier must not exceed one-half inch.

(5) Mortar is not required, unless specified in the installation instructions or required by a registered professional engineer or registered architect.

(b) *Frame piers 36 inches to 67 inches high and corner piers.*

(1) All frame piers between 36 inches and 67 inches high and all corner piers over three blocks high must be constructed out of double, interlocked concrete blocks, as shown in Figure B to this section, when the design capacity of the block is not exceeded. Mortar is not required for concrete block piers, unless otherwise specified in the installation instructions or required by a professional engineer or registered architect.

(2) Horizontal offsets from the top to the bottom of the pier must not exceed one inch.

(c) *All piers over 67 inches high.* Piers over 67 inches high must be designed by a registered professional engineer or registered architect, in accordance with acceptable engineering practice. Mortar is not required for concrete block piers, unless otherwise specified in the manufacturer installation instructions or by the design.

BILLING CODE 4210–07–P

**Figure A to § 3285.306 Typical Footing and Pier Design, Single Concrete Block.**

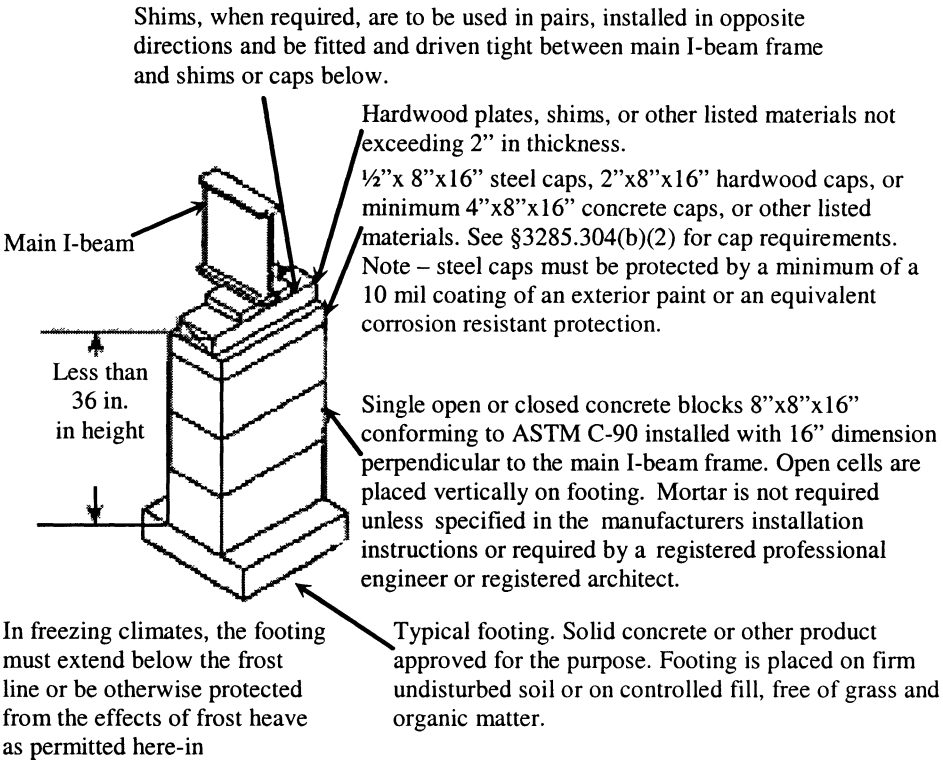

**Figure B to 3285.306(b) Typical Footing and Pier Installation, Double Concrete Block.**

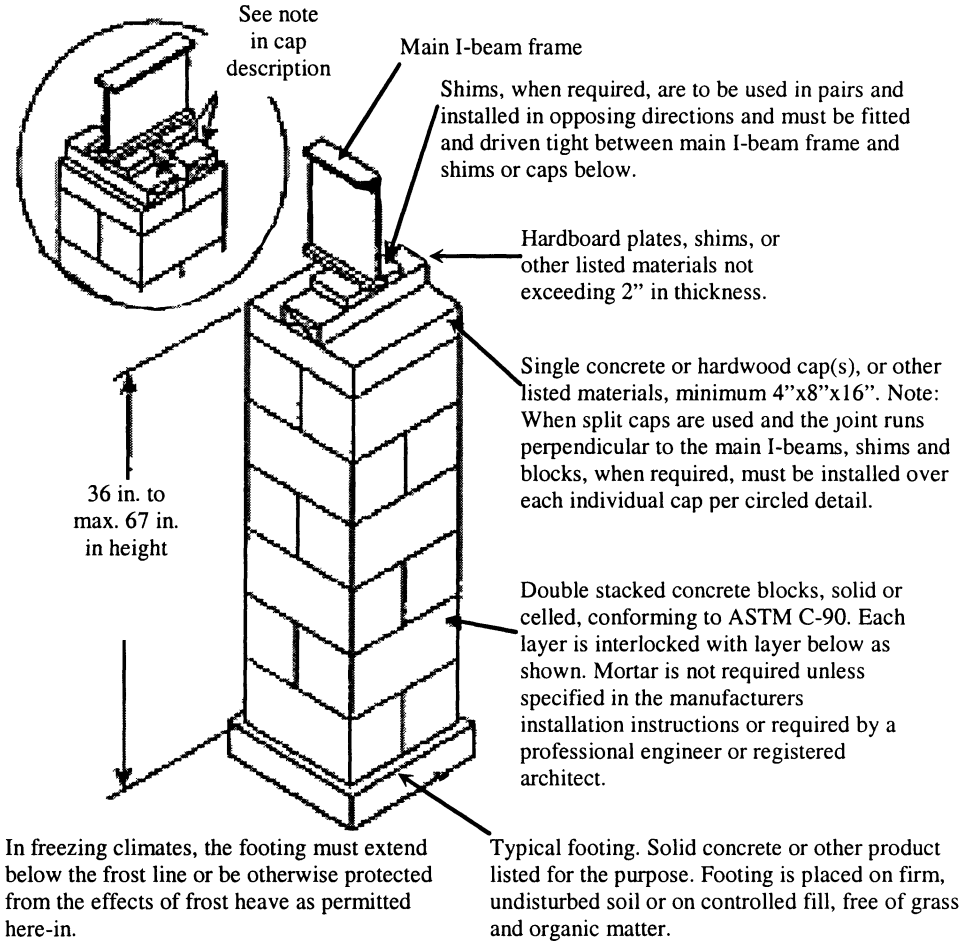


**§ 3285.307 Perimeter support piers.**

(a) Piers required at mate-line supports, perimeter piers, and piers at exterior wall openings are permitted to be constructed of single open-cell or closed-cell concrete blocks, with nominal dimensions of 8 inches × 8 inches × 16 inches, to a maximum height of 54 inches, as shown in Figure A to this section, when the design capacity of the block is not exceeded.

(b) Piers used for perimeter support must be installed with the long dimension parallel to the perimeter rail.

**§ 3285.308 Manufactured piers.**

(a) Manufactured piers must be listed and labeled and installed to the pier manufacturer's installation instructions. See § 3285.303(d)(2) for additional requirements.

(b) Metal or other manufactured piers must be provided with protection against weather deterioration and corrosion at least equivalent to that provided by a coating of zinc on steel of .30 oz./ft.$^2$ of surface coated.

**§ 3285.309 [Reserved]**

**§ 3285.310 Pier location and spacing.**

(a) The location and spacing of piers depends upon the dimensions of the home, the live and dead loads, the type of construction (single-or multi-section), I-beam size, soil bearing capacity, footing size, and such other factors as the location of doors or other openings.

(b) Mate-line and column pier supports must be in accordance with this subpart and consistent with Figures A through C to this section, unless the pier support and footing configuration is designed by a registered professional engineer or registered architect.

(c) Piers supporting the frame must be no more than 24 inches from both ends and not more than 120 inches center to center under the main rails.

(d) *Pier support locations.* Pier support locations and spacing must be presented to be consistent with Figures A and B to § 3285.312, as applicable, unless alternative designs are provided by a professional engineer or registered architect in accordance with acceptable engineering practice.

**Figure A to § 3285.310 Typical Mate-Line Column Pier and Mating Wall Support when Frame Only Blocking is Required.**

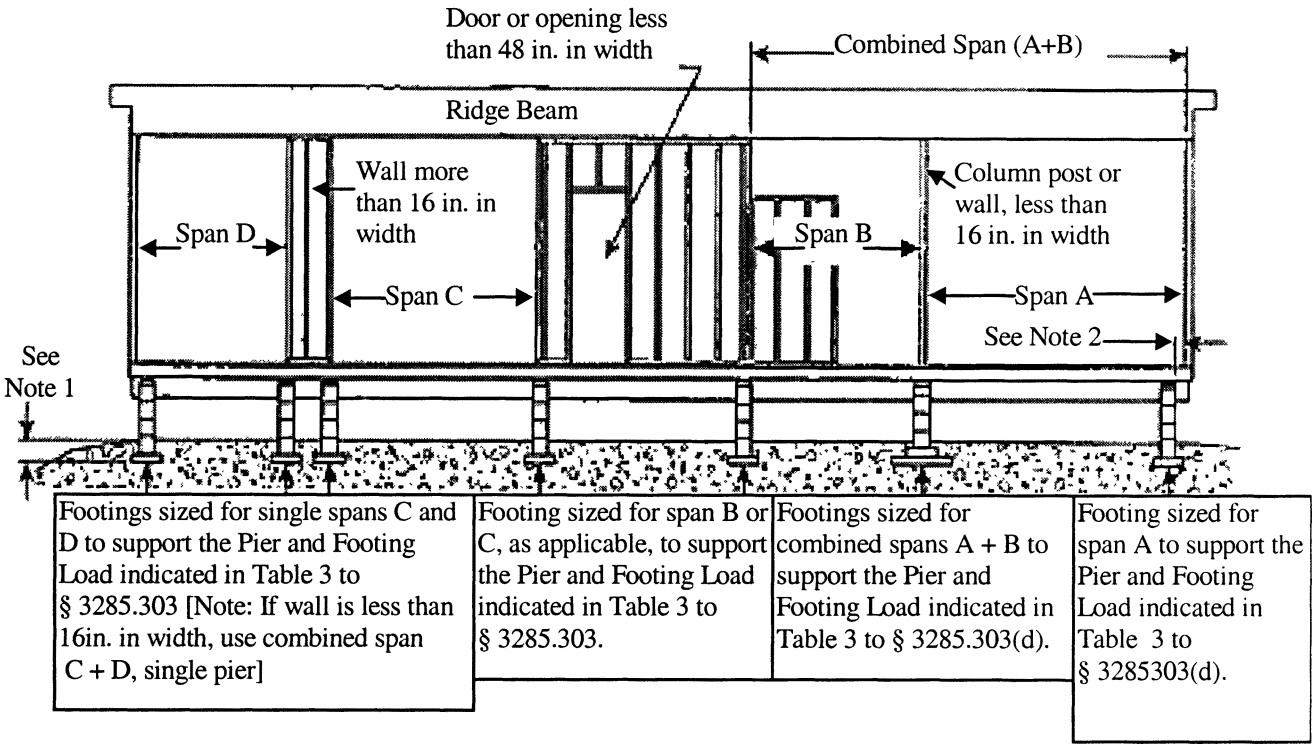


**Notes:**

1. Bottom of footings must extend below frost line depth, unless designed for placement above the frost line. (See § 3285.312(b)).
2. Piers may be offset up to 6 in. in either direction along the supported members to allow for plumbing, electrical, mechanical, equipment, crawlspaces, or other devices.
3. Single-stack concrete block pier loads must not exceed 8,000 lbs.
4. Prefabricated piers must not exceed their approved or listed maximum vertical or horizontal design loads.
5. When a full-height mating wall does not support the ridge beam, this area is considered an unsupported span—Span B.
6. Piers are not required at openings in the mating wall that are less than 48 inches in width. Place piers on both sides of mating wall openings that are 48 inches or greater in width. For roof loads of 40 psf or greater, a professional engineer or registered architect must determine the maximum mating wall opening permitted without pier or other supports.

**Figure B to § 3285.310(b) Typical Mate-Line Column Pier and Mating Wall Support When Perimeter Blocking is Required.**

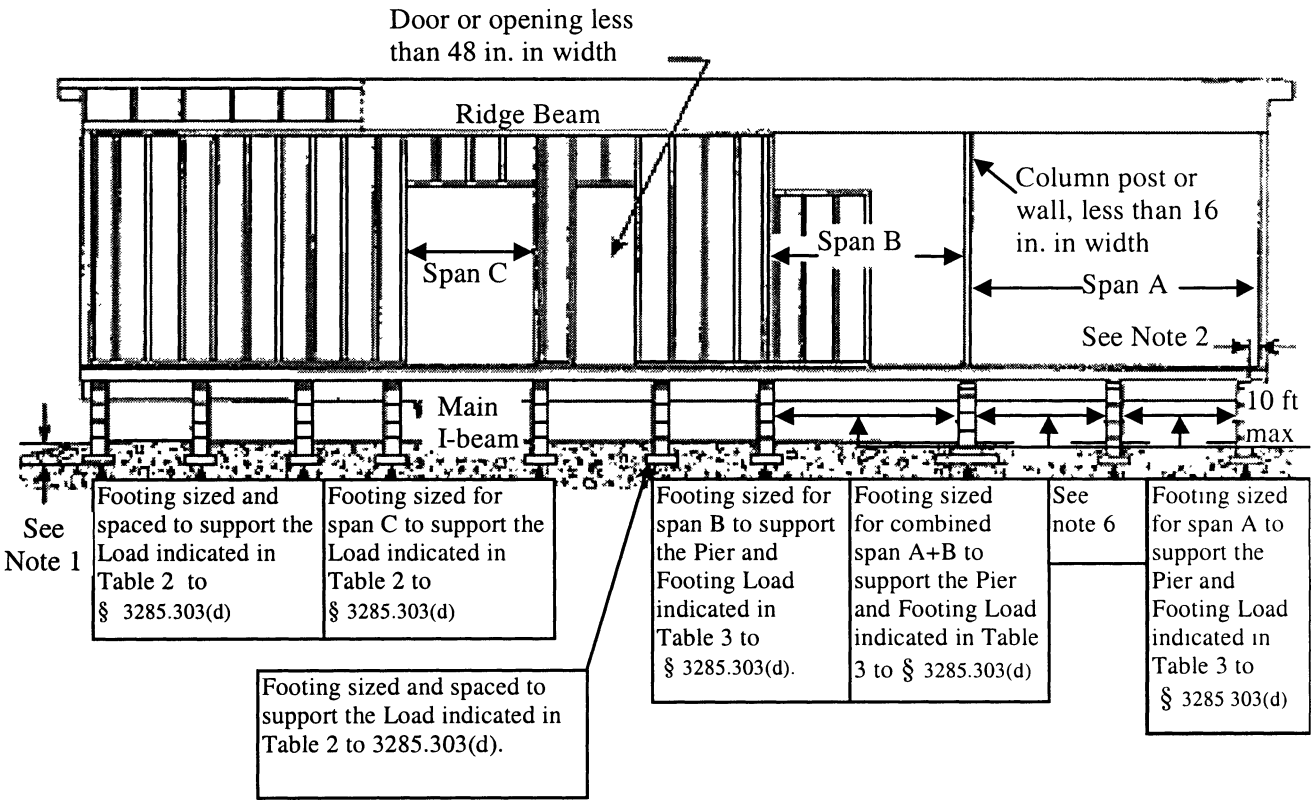


**Notes:**

1. Bottom of footings must be below the frost line depth, unless designed for placement above the frost line. (See § 3285.312(b)).
2. Piers may be offset 6 in. in either direction along supported members to allow for plumbing electrical, mechanical equipment, crawlspaces, or other devices.
3. Single stack concrete block pier loads must not exceed 8,000 lbs.
4. Piers are not required at openings in the mating wall that are less than 48 inches in width. Place piers on both sides of mating wall openings that are 48 inches or greater in width. For roof loads of 40 psf or greater, a professional engineer or registered architect must determine the maximum mating wall opening permitted without pier or other supports.
5. When a full-height mating wall does not support the ridge beam, this area is considered an unsupported span—Span B.
6. In areas where the open span is greater than 10 ft., intermediate piers and footings must be placed at maximum 10 ft. on center.
7. Prefabricated piers must not exceed their approved or listed maximum horizontal or vertical design loads.
8. Column piers are in addition to piers required under full-height mating walls.

**Figure C to § 3285.310 Typical Mate-Line Column and Piers.**

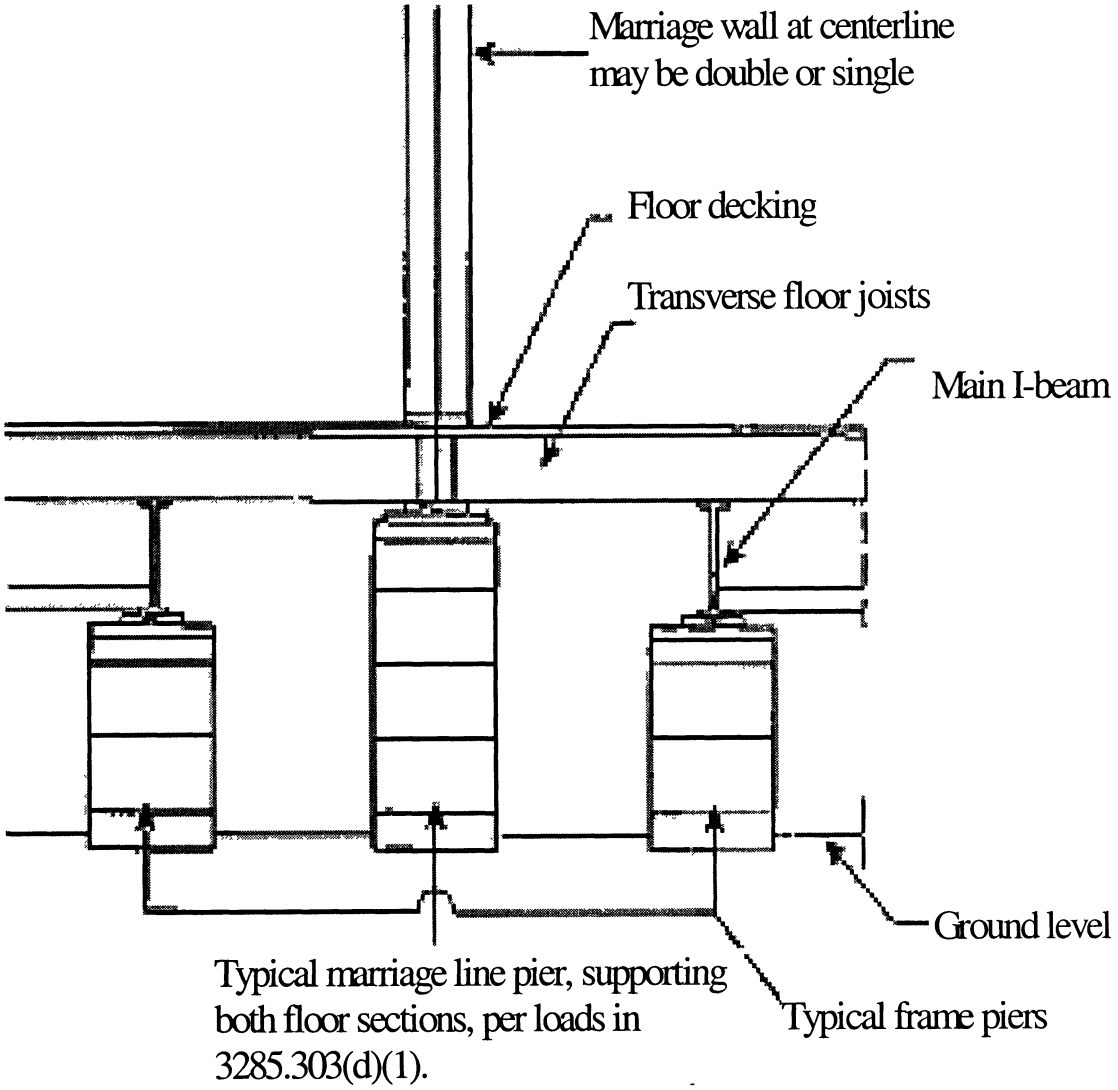


**Notes:**

1. Mate-line column support piers are installed with the long dimension of the concrete block perpendicular to the rim joists.
2. Pier and footing designed to support both floor sections. Loads as listed in Table 3 to § 3285.303 are total column loads for both sections.

**§ 3285.311 Required perimeter supports.**

(a) Perimeter pier or other supports must be located as follows:

(1) On both sides of side wall exterior doors (such as entry, patio, and sliding glass doors) and any other side wall openings of 48 inches or greater in width, and under load-bearing porch posts, factory installed fireplaces, and fireplace stoves).

(2) Other perimeter supports must be:

(i) Located in accordance with Table 2 to § 3285.303; or

(ii) Provided by other means such as additional outriggers or floor joists. When this alternative is used, the designs required by § 3285.301 must consider the additional loads in sizing the pier and footing supports under the main chassis beam.

(b) For roof live loads of 40 psf or greater, a professional engineer or architect must determine the maximum sidewall opening permitted without perimeter pier or other supports.

(c) The location and installation of any perimeter pier support must not take the home out of compliance with the Manufactured Home Construction and Safety Standards (part 3280 of this chapter).

**§ 3285.312 Footings.**

(a) Materials approved for footings must provide equal load-bearing capacity and resistance to decay, as required by this section. Footings must be placed on undisturbed soil or fill compacted to 90 percent of maximum relative density. A footing must support every pier. Footings are to be either:

(1) *Concrete.*

(i) Four inch nominal precast concrete pads meeting or exceeding ASTM C 90–02a, Standard Specification for Loadbearing Concrete Masonry Units (incorporated by reference, see § 3285.4), without reinforcement, with at least a 28-day compressive strength of 1,200 pounds per square inch (psi); or

(ii) Six inch minimum poured-in-place concrete pads, slabs, or ribbons with at least a 28-day compressive

strength of 3,000 pounds per square inch (psi). Site-specific soil conditions or design load requirements may also require the use of reinforcing steel in cast-in-place concrete footings.

(2) *Pressure-treated wood.*

(i) Pressure-treated wood footings must consist of a minimum of two layers of nominal 2-inch thick pressure-treated wood, a single layer of nominal ¾-inch thick, pressure-treated plywood with a maximum size of 16 inches by 16 inches, or at least two layers of ¾-inch thick, pressure-treated plywood for sizes greater than 16 inches by 16 inches. Plywood used for this purpose is to be rated exposure 1 or exterior sheathing, in accordance with PS1–95, Construction and Industrial Plywood (incorporated by reference, see § 3285.4).

(ii) Pressure treated lumber is to be treated with a water-borne adhesive, in accordance with AWPA Standard U1–04 (incorporated by reference, see § 3285.4) for Use Category 4B ground contact applications.

(iii) Cut ends of pressure treated lumber must be field-treated, in accordance with AWPA Standard M4–02 (incorporated by reference, see § 3285.4).

(3) *ABS footing pads.*

(i) ABS footing pads are permitted, provided they are installed in accordance with the pad manufacturer installation instructions and certified for use in the soil classification at the site.

(ii) ABS footing pads must be listed or labeled for the required load capacity.

(4) Other Materials. Footings may be of other materials than those identified in this section, provided they are listed for such use and meet all other applicable requirements of this subpart.

(b) *Placement in freezing climates.* Footings placed in freezing climates must be designed using methods and practices that prevent the effects of frost heave by one of the following methods:

(1) Conventional footings. Conventional footings must be placed below the frost line depth for the site unless an insulated foundation or monolithic slab is used (refer to §§ 3285.312(b)(2) and 3285.312(b)(3)). When the frost line depth is not available from the LAHJ, a registered professional engineer, registered architect, or registered geologist must be consulted to determine the required frost line depth for the manufactured home site. This is not subject to the provisions in § 3285.2(c) that also require review by the manufacturer and approval by its DAPIA for any variations to the manufacturer's installation instructions for support and anchoring.

(2) *Monolithic slab systems.* A monolithic slab is permitted above the frost line when all relevant site-specific conditions, including soil characteristics, site preparation, ventilation, and insulative properties of the under floor enclosure, are considered and anchorage requirements are accommodated as set out in § 3285.401. The monolithic slab system must be designed by a registered professional engineer or registered architect:

(i) In accordance with acceptable engineering practice to prevent the effects of frost heave; or

(ii) In accordance with SEI/ASCE 32–01 (incorporated by reference, see § 3285.4).

(3) *Insulated foundations.* An insulated foundation is permitted above the frost line, when all relevant site-specific conditions, including soil characteristics, site preparation, ventilation, and insulative properties of the under floor enclosure, are considered, and the foundation is designed by a registered professional engineer or registered architect:

(i) In accordance with acceptable engineering practice to prevent the effects of frost heave; or

(ii) In accordance with SEI/ASCE 32–01 (incorporated by reference, see § 3285.4).

(c) *Sizing of footings.* The sizing and layout of footings depends on the load-bearing capacity of the soil, footings, and the piers. See §§ 3285.202 and 3285.303, and Table to 3285.312.

## Figure A to § 3285.312 Typical Blocking Diagram for Single Section Homes

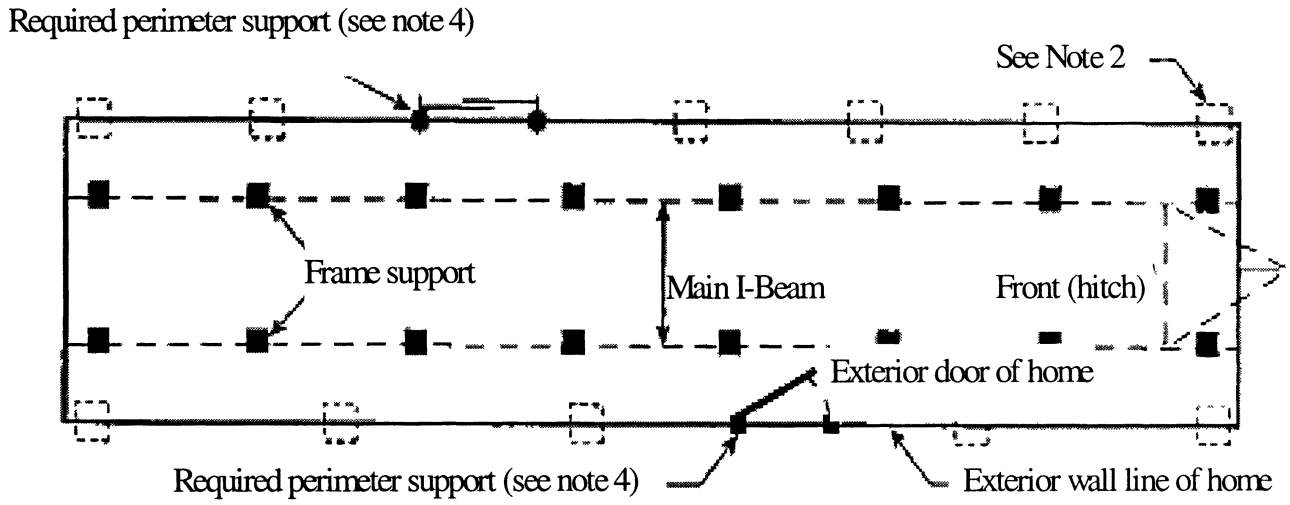


**Notes:**

1. Refer to Table 1 of § 3285.303 for pier and footing requirements when frame blocking only is used.

2. In addition to blocking required by § 3285.311, see Table 2 to § 3285.303 for maximum perimeter blocking loads.

3. End piers under main I-beams may be set back a maximum of 24 inches, as measured from the outside edge of the floor to the center of the pier.

4. Place piers on both sides of sidewall exterior doors, patio doors, and sliding glass doors; under porch posts, factory-installed

fireplaces, and fireplace stoves; under jamb studs at multiple window openings; and at any other sidewall openings 48 inches or greater in width. For roof loads of 40 psf or greater, a professional engineer or registered architect must determine the maximum sidewall opening permitted without perimeter supports. See §§ 3285.307 and 3285.311 for additional requirements and for locating perimeter supports.

## Figure B to § 3285.312 Typical Blocking Diagram for Multi-section Home.

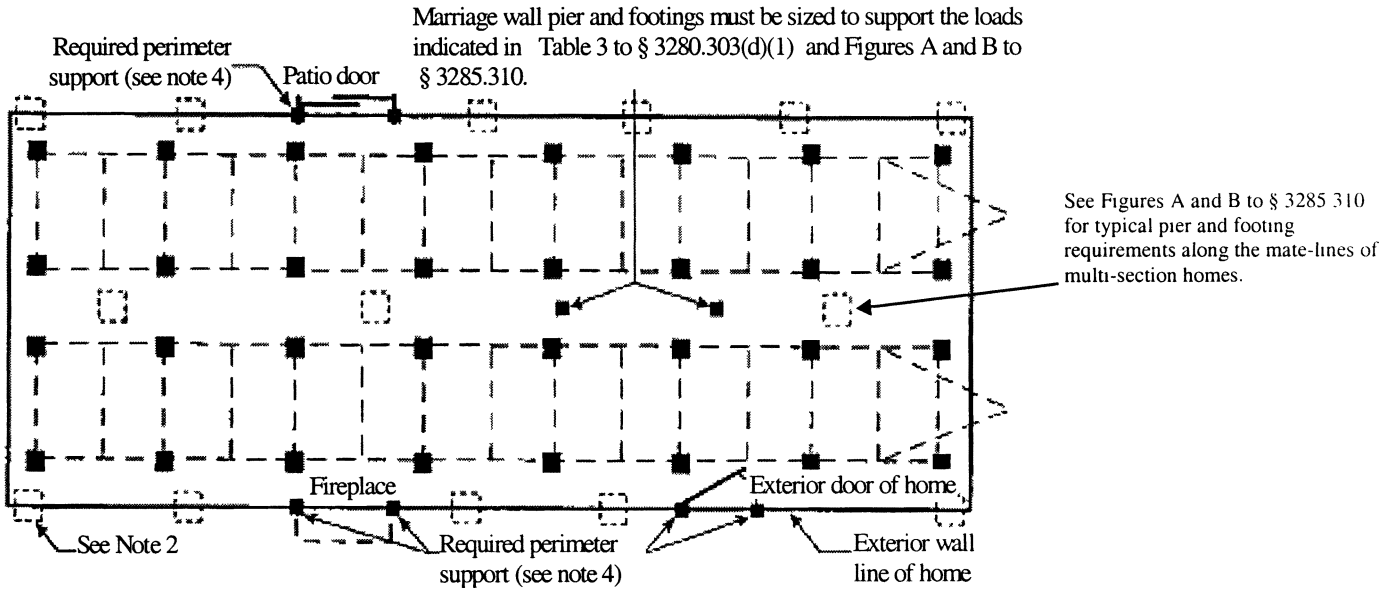


1. Refer to Table 1 to § 3285.303 for pier and footing requirements when frame blocking only is used.

2. In addition to blocking required by § 3285.311, see Tables 2 and 3 to § 3285.303 for maximum perimeter blocking loads.

3. End piers under main I-beams may be set back a maximum of 24 inches, as measured from the outside edge of the floor to the center of the pier.

4. Place piers on both sides of sidewall exterior doors, patio doors, and sliding glass doors; under porch posts, factory-installed fireplaces, and fireplace stoves; under jamb studs at multiple window openings; and at any other sidewall openings of 48 inches or greater in width. For roof loads of 40 psf or greater, a professional engineer or registered architect must determine the maximum side wall opening permitted without perimeter supports or mating wall opening permitted without pier or other supports. See §§ 3285.307 and 3285.311 for additional information on requirements and for locating perimeter supports.

5. When an end pier under the mate-line also serves as a column pier, it may be set back a maximum of 6 in., as measured from the inside edge of the exterior wall to the center of the pier.

TABLE TO § 3285.312.—THE SIZE AND CAPACITY FOR UNREINFORCED CAST-IN-PLACE FOOTINGS

| Soil capacity (psf) | Minimum footing size (in.) | 8 in. x 16 in. pier | | 16 in. x 16 in. pier | |
|---|---|---|---|---|---|
| | | Maximum footing capacity (lbs.) | Unreinforced cast-in-place minimum thickness (in.) | Maximum footing capacity (lbs.) | Unreinforced cast-in-place minimum thickness (in.) |
| 1,000 | 16 x 16 | 1,600 | 6 | 1,600 | 6 |
| | 20 x 20 | 2,600 | 6 | 2,600 | 6 |
| | 24 x 24 | 3,700 | 6 | 3,700 | 6 |
| | 30 x 30 | 5,600 | 8 | 5,800 | 6 |
| | 36 x 36 | 7,900 | 10 | 8,100 | 8 |
| | 42 x 42 | [4] 10,700 | 10 | 10,700 | 10 |
| | 48 x 48 | [4] 13,100 | 12 | 13,600 | 10 |
| 1,500 | 16 x 16 | 2,500 | 6 | 2,500 | 6 |
| | 20 x 20 | 4,000 | 6 | 4,000 | 6 |
| | 24 x 24 | 5,600 | 8 | 5,700 | 6 |
| | 30 x 30 | [4] 8,500 | 10 | 8,900 | 8 |
| | 36 x 36 | [4] 12,400 | 10 | 12,600 | 8 |
| | 42 x 42 | [4] 16,500 | 12 | [4] 16,800 | 10 |
| | 48 x 48 | [4] 21,200 | 14 | [4] 21,600 | 12 |
| 2,000 | 16 x 16 | 3,400 | 6 | 3,400 | 6 |
| | 20 x 20 | 5,300 | 6 | 5,300 | 6 |
| | 24 x 24 | 7,600 | 8 | 7,700 | 6 |

TABLE TO § 3285.312.—THE SIZE AND CAPACITY FOR UNREINFORCED CAST-IN-PLACE FOOTINGS—Continued

| Soil capacity (psf) | Minimum footing size (in.) | 8 in. x 16 in. pier | | 16 in. x 16 in. pier | |
|---|---|---|---|---|---|
| | | Maximum footing capacity (lbs.) | Unreinforced cast-in-place minimum thickness (in.) | Maximum footing capacity (lbs.) | Unreinforced cast-in-place minimum thickness (in.) |
| | 30 x 30 | [4] 11,700 | 10 | 11,900 | 8 |
| | 36 x 36 | [4] 16,700 | 15 | [4] 16,900 | 10 |
| | 42 x 42 | [4] 21,700 | 18 | [4] 22,700 | 12 |
| 2,500 | 16 x 16 | 4,300 | 6 | 4,300 | 6 |
| | 20 x 20 | 6,700 | 6 | 6,700 | 6 |
| | 24 x 24 | [4] 9,600 | 8 | 9,700 | 6 |
| | 30 x 30 | [4] 14,800 | 10 | 15,000 | 8 |
| | 36 x 36 | [4] 20,700 | 12 | [4] 21,400 | 10 |
| 3,000 | 16 x 16 | 5,200 | 6 | 5,200 | 6 |
| | 20 x 20 | 8,100 | 8 | 8,100 | 6 |
| | 24 x 24 | [4] 11,500 | 10 | 11,700 | 6 |
| | 30 x 30 | [4] 17,800 | 12 | [4] 18,100 | 8 |
| | 36 x 36 | [4] 25,400 | 14 | [4] 25,900 | 10 |
| 4,000 | 16 x 16 | 7,000 | 6 | 7,000 | 6 |
| | 20 x 20 | [4] 10,800 | 8 | 10,900 | 6 |
| | 24 x 24 | [4] 15,500 | 10 | 15,600 | 8 |
| | 30 x 30 | [4] 23,300 | 12 | [4] 24,200 | 10 |

**Notes:**

1. The footing sizes shown are for square pads and are based on the area (in.$^2$), shear and bending required for the loads shown. Other configurations, such as rectangular or circular configurations, can be used, provided the area and depth is equal to or greater than the area and depth of the square footing shown in the table, and the distance from the edge of the pier to the edge of the footing is not less than the thickness of the footing.
2. The 6 in. cast-in-place values can be used for 4 in. unreinforced precast concrete footings.
3. The capacity values listed have been reduced by the dead load of the concrete footing.
4. Concrete block piers must not exceed their design capacity of 8,000 lbs. for 8″ x 16″ single stack block and 16,000 lbs. for 16″ x 16″ double stack block.
5. A registered professional engineer or registered architect must prepare the design, if the design loads exceed the capacity for single or double stack concrete block piers shown in footnote 4.

### § 3285.313 Combination systems.

Support systems that combine both load-bearing capacity and uplift resistance must also be sized and designed for all applicable design loads.

### § 3285.314 [Reserved]

### § 3285.315 Special snow load conditions.

(a) *General.* Foundations for homes designed for and located in areas with roof live loads greater than 40 psf must be designed by the manufacturer for the special snow load conditions, in accordance with acceptable engineering practice. Where site or other conditions prohibit the use of the manufacturer's instructions, a registered professional engineer or registered architect must design the foundation for the special snow load conditions.

(b) *Ramadas.* Ramadas may be used in areas with roof live loads greater than 40 psf. Ramadas are to be self-supporting, except that any connection to the home must be for weatherproofing only.

## Subpart E—Anchorage Against Wind

### § 3285.401 Anchoring instructions.

(a) After blocking and leveling, the manufactured home must be secured against the wind by use of anchor assembly type installations or by connecting the home to an alternative foundation system. See § 3285.301.

(b) For anchor assembly type installations, the installation instructions must require the home to be secured against the wind, as described in this section. The installation instructions and design for anchor type assemblies must be prepared by a registered professional engineer or registered architect, in accordance with acceptable engineering practice, the design loads of the MHCSS, and § 3285.301(d).

(c) All anchoring and foundation systems must be capable of meeting the loads that the home was designed to withstand required by part 3280, subpart D of this chapter, as shown on the home's data plate. Exception: Manufactured homes that are installed in less restrictive roof load zone and wind zone areas may have foundation or anchorage systems that are capable of meeting the lower design load provisions of the Standards, if the design for the lower requirements is either provided in the installation instructions or the foundation and anchorage system is designed by a professional engineer or registered architect.

(d) The installation instructions are to include at least the following information and details for anchor assembly-type installations:

(1) The maximum spacing for installing diagonal ties and any required vertical ties or straps to ground anchors;

(2) The minimum and maximum angles or dimensions for installing diagonal ties or straps to ground anchors and the main chassis members of the manufactured home;

(3) Requirements for connecting the diagonal ties to the main chassis members of the manufactured home. If the diagonal ties are attached to the bottom flange of the main chassis beam, the frame must be designed to prevent rotation of the beam;

(4) Requirements for longitudinal and mating wall tie-downs and anchorage;

(5) The method of strap attachment to the main chassis member and ground anchor, including provisions for swivel-type connections;

(6) The methods for protecting vertical and diagonal strapping at sharp corners by use of radius clips or other means; and

(7) As applicable, the requirements for sizing and installation of stabilizer plates.

### § 3285.402 Ground anchor installations.

(a) *Ground anchor certification and testing.* Each ground anchor must be manufactured and provided with

installation instructions, in accordance with its listing or certification. A nationally recognized testing agency must list, or a registered professional engineer or registered architect must certify, the ground anchor for use in a classified soil (refer to § 3285.202), based on a nationally recognized testing protocol, or a professional engineer or registered architect must certify that the ground anchor is capable of resisting all loads in paragraph (b) of this section for the soil type or classification.

(b) *Specifications for tie-down straps and ground anchors.*

(1) *Ground anchors.* Ground anchors must be installed in accordance with their listing or certification, be installed to their full depth, be provided with protection against weather deterioration and corrosion at least equivalent to that provided by a coating of zinc on steel of not less than 0.30 oz./ft.$^2$ of surface coated, and be capable of resisting a minimum ultimate load of 4,725 lbs. and a working load of 3,150 lbs., as installed, unless reduced capacities are noted in accordance with note 11 of Table 1 to this section or note 12 of Tables 2 and 3 to this section. The ultimate load and working load of ground anchors and anchoring equipment must be determined by a registered professional engineer, registered architect, or tested by a nationally recognized third-party testing agency in accordance with a nationally recognized testing protocol.

(2) *Tie-down straps.* A 1¼ inch x 0.035 inch or larger steel strapping conforming to ASTM D 3953—97, Standard Specification for Strapping, Flat Steel and Seals (incorporated by reference, see § 3285.4), Type 1, Grade 1, Finish B, with a minimum total capacity of 4,725 pounds (lbs.) and a working capacity of 3,150 pounds (lbs.) must be used. The tie-down straps must be provided with protection against weather deterioration and corrosion at least equivalent to that provided by a coating of zinc on steel of not less than 0.30 oz./ft.$^2$ of surface coated. Slit or cut edges of coated strapping need not be zinc coated.

(c) *Number and location of ground anchors.*

(1) Ground anchor and anchor strap spacing must be:

(i) No greater than the spacing shown in Tables 1 through 3 to this section and Figures A and B to this section; or

(ii) Designed by a registered engineer or architect, in accordance with acceptable engineering practice and the requirements of the MHCSS for any conditions that are outside the parameters and applicability of the Tables 1 through 3 to this section.

(2) The requirements in paragraph (c) of this section must be used to determine the maximum spacing of ground anchors and their accompanying anchor straps, based on the soil classification determined in accordance with § 3285.202:

(i) The installed ground anchor type and size (length) must be listed for use in the soil class at the site and for the minimum and maximum angle permitted between the diagonal strap and the ground; and

(ii) All ground anchors must be installed in accordance with their listing or certification and the ground anchor manufacturer installation instructions; and

(iii) If required by the ground anchor listing or certification, the correct size and type of stabilizer plate is installed. If metal stabilizer plates are used, they must be provided with protection against weather deterioration and corrosion at least equivalent to that provided by a coating of zinc on steel of not less than 0.30 oz./ft.2 of surface coated. Alternatively, ABS stabilizer plates may be used when listed and certified for such use.

(3) *Longitudinal anchoring.* Manufactured homes must also be stabilized against wind in the longitudinal direction in all Wind Zones. Manufactured homes located in Wind Zones II and III must have longitudinal ground anchors installed on the ends of the manufactured home transportable section(s) or be provided with alternative systems that are capable of resisting wind forces in the longitudinal direction. See Figure C to § 3285.402 for an example of one method that may be used to provide longitudinal anchoring. A professional engineer or registered architect must certify the longitudinal anchoring method or any alternative system used as adequate to provide the required stabilization, in accordance with acceptable engineering practice.

**Figure A to § 3285.402 Ground Anchor Locations and Spacing – Plan View.**

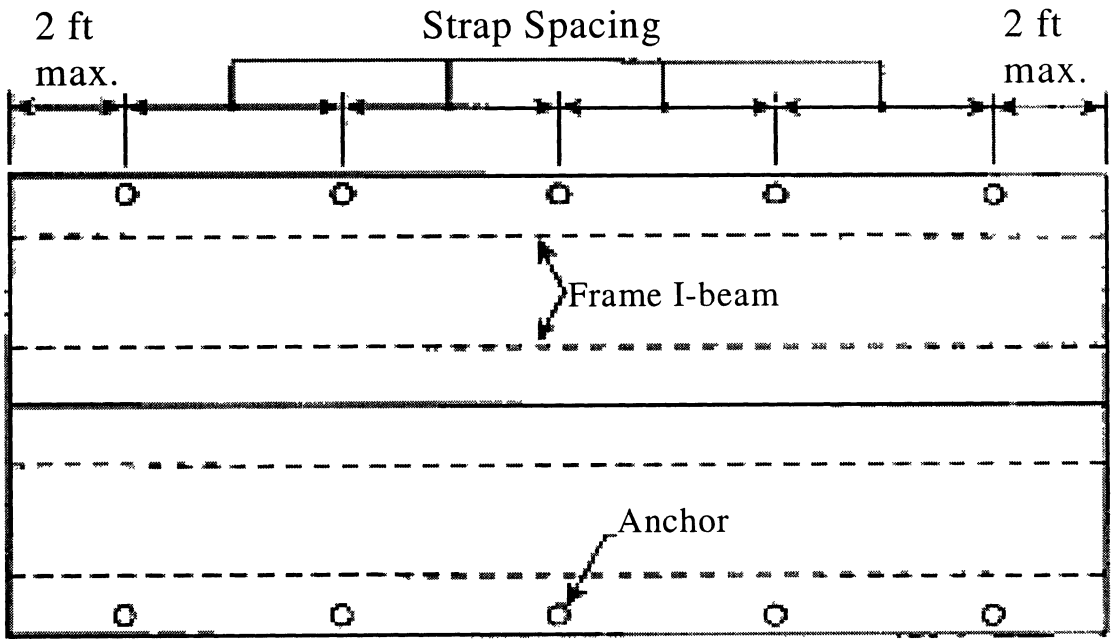


**Notes:**

1. Refer to Tables 1, 2, and 3 to this section for maximum ground anchor spacing.

2. Longitudinal anchors not shown for clarity; refer to 3285.402(b)(2) for longitudinal anchoring requirements.

**Figure B to § 3285.402 Anchor Strap and Pier Relationship.**

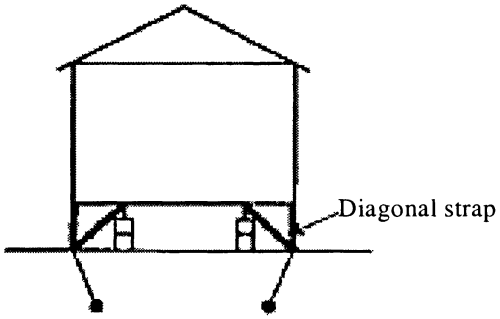


Near Beam Method

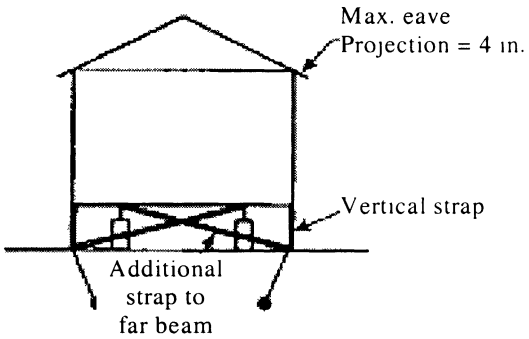


Second Beam Method
(Vertical tie down straps required)

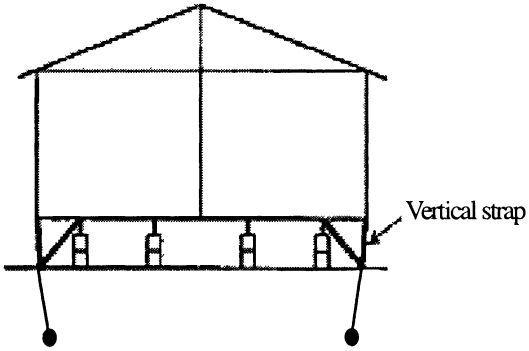


Near Beam Method
(Mate-line piers and anchors omitted for clarity)

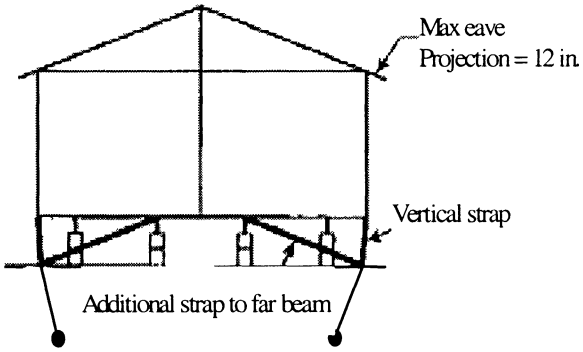


Second Beam Method
(Mate-line piers and anchors omitted for clarity)

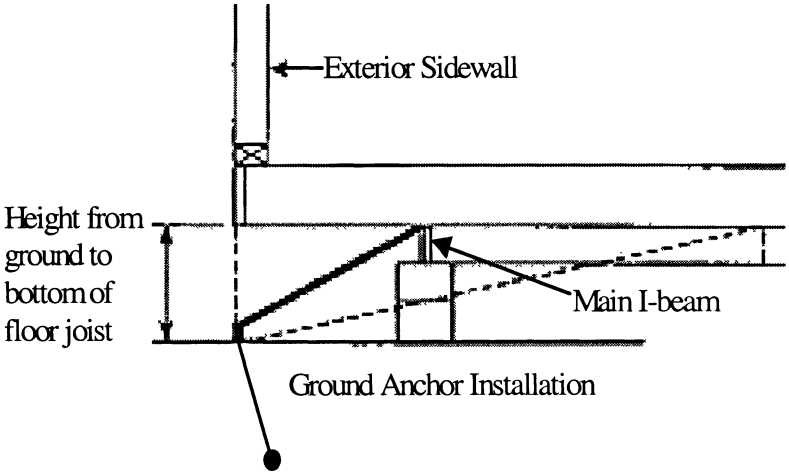


**Notes:**

1. Vertical Straps are not required in Wind Zone I.

2. The frame must be designed to prevent rotation of the main chassis beam, when the diagonal ties are not attached to the top flange of the beam. See § 3285.401(d)(3).

**Figure C to § 3285.402 Longitudinal Anchoring**

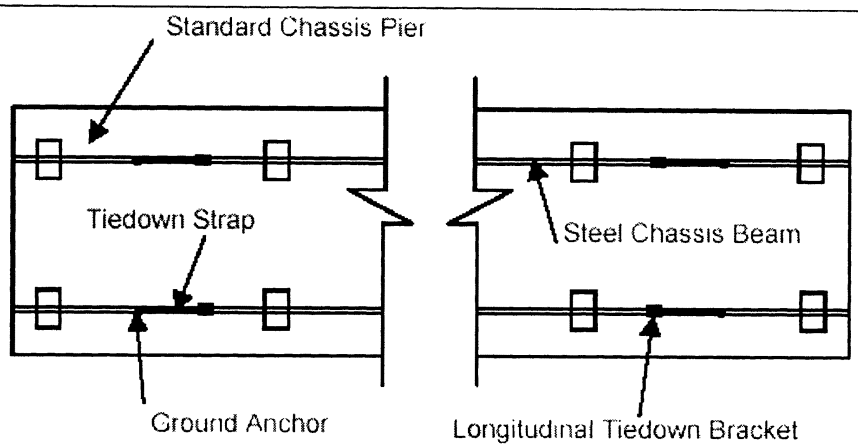


Longitudinal Anchorage – Plan View

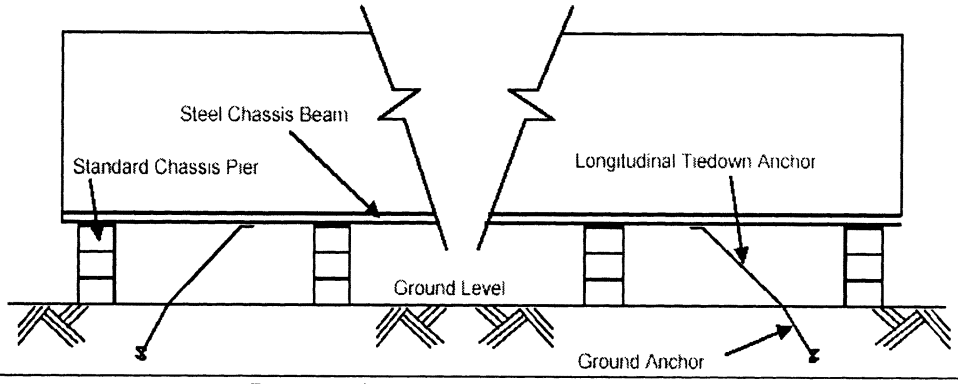


Longitudinal Anchorage – Side View

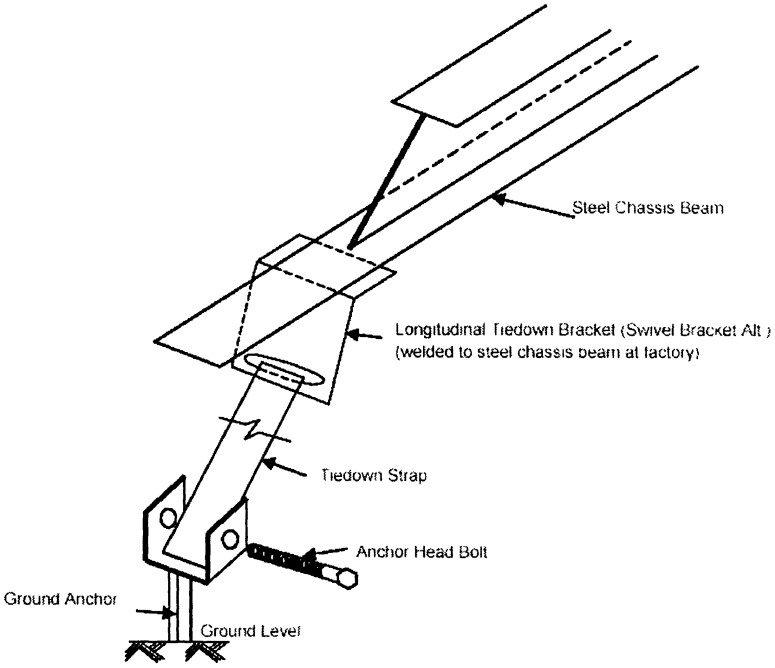


Typical Longitudinal Anchorage Bracket and Ground Anchor Attachment

TABLE 1 TO § 3285.402.—MAXIMUM DIAGONAL TIE-DOWN STRAP SPACING, WIND ZONE I

| Nominal floor width, single section/multi-section | Max. height from ground to diagonal strap attachment | I-beam spacing 82.5 in. | I-beam spacing 99.5 in. |
|---|---|---|---|
| 12/24 ft. 144 in. nominal section(s) | 25 in | 14 ft. 2 in | N/A. |
| | 33 in | 11 ft. 9 in | N/A. |
| | 46 in | 9 ft. 1 in | N/A. |
| | 67 in | N/A | N/A. |
| 14/28 ft. 168 in. nominal section(s) | 25 in | 18 ft. 2 in | 15 ft. 11 in. |
| | 33 in | 16 ft. 1 in | 13 ft. 6 in. |
| | 46 in | 13 ft. 3 in | 10 ft. 8 in. |
| | 67 in | 10 ft. 0 in | N/A. |
| 16/32 ft. 180 in. to 192 in. nominal section(s) | 25 in | N/A | 19 ft. 5 in. |
| | 33 in | 19 ft. 0 in | 17 ft. 5 in. |
| | 46 in | 16 ft. 5 in | 14 ft. 7 in. |
| | 67 in | 13 ft. 1 in | 11 ft. 3 in. |

**Notes:**

1. Table is based on maximum 90 in. sidewall height.
2. Table is based on maximum 4 in. inset for ground anchor head from edge of floor or wall.
3. Table is based on main rail (I-beam) spacing per given column.
4. Table is based on maximum 4 in. eave width for single-section homes and maximum 12 in. for multi-section homes.
5. Table is based on maximum 20-degree roof pitch (4.3/12).
6. Table is based upon the minimum height between the ground and the bottom of the floor joist being 18 inches. Interpolation may be required for other heights from ground to strap attachment.
7. Additional tie-downs may be required per the home manufacturer instructions.
8. Ground anchors must be certified for these conditions by a professional engineer, architect, or listed by a nationally recognized testing laboratory.
9. Ground anchors must be installed to their full depth, and stabilizer plates, if required by the ground anchor listing or certification, must also be installed in accordance with the listing or certification and in accordance with the ground anchor and home manufacturer instructions.
10. Strapping and anchoring equipment must be certified by a registered professional engineer or registered architect, or listed by a nationally recognized testing agency to resist these specified forces, in accordance with testing procedures in ASTM D 3953–97, Standard Specification for Strapping, Flat Steel and Seals (incorporated by reference, see § 3285.4).
11. A reduced ground anchor or strap working load capacity will require reduced tie-down strap and anchor spacing.
12. Ground anchors must not be spaced closer than the minimum spacing permitted by the listing or certification.
13. Table is based on a 3,150 lbs. working load capacity, and straps must be placed within 2 ft. of the ends of the home.
14. Table is based on a minimum angle of 30 degrees and a maximum angle of 60 degrees between the diagonal strap and the ground.
15. Table does not consider flood or seismic loads and is not intended for use in flood or seismic hazard areas. In those areas, the anchorage system is to be designed by a professional engineer or architect.

TABLE 2 TO § 3285.402—MAXIMUM DIAGONAL TIE-DOWN STRAP SPACING, WIND ZONE II.

| Nominal floor width, single section/multi-section | Max. height from ground to diagonal strap attachment | Near beam method I–beam spacing | | Second beam method I–beam spacing | |
|---|---|---|---|---|---|
| | | 82.5 in. | 99.5 in. | 82.5 in. | 99.5 in. |
| 12 ft/24 ft. 144 in. nominal section(s). | 25 in | 6 ft. 2 in | 4 ft. 3 in | N/A | N/A |
| | 33 in | 5 ft. 2 in | N/A | N/A | N/A |
| | 46 in | 4 ft. 0 in | N/A | N/A | N/A |
| | 67 in | N/A | N/A | 6 ft 1 in | 6 ft 3 in |
| 14 ft/28 ft. 168 in. nominal section(s). | 25 in | 7 ft. 7 in | 6 ft. 9 in | N/A | N/A |
| | 33 in | 6 ft. 10 in | 5 ft. 9 in | N/A | N/A |
| | 46 in | 5 ft. 7 in | 4 ft. 6 in | N/A | N/A |
| | 67 in | 4 ft. 3 in | N/A | N/A | N/A |
| 16 ft/32 ft. 180 in. to 192 in. nominal section(s). | 25 in | N/A | 7 ft. 10 in | N/A | N/A |
| | 33 in | 7 ft. 6 in | 7 ft. 2 in | N/A | N/A |
| | 46 in | 6 ft. 9 in | 6 ft. 0 in | N/A | N/A |
| | 67 in | 5 ft. 4 in | 4 ft. 7 in | N/A | N/A |

**Notes:**

1. Table is based on maximum 90 in. sidewall height.
2. Table is based on maximum 4 in. inset for ground anchor head from edge of floor or wall.
3. Tables are based on main rail (I-beam) spacing per given column.
4. Table is based on maximum 4 in. eave width for single-section homes and maximum 12 in. for multi-section homes.
5. Table is based on maximum 20-degree roof pitch (4.3/12).
6. All manufactured homes designed to be located in Wind Zone II must have a vertical tie installed at each diagonal tie location.
7. Table is based upon the minimum height between the ground and the bottom of the floor joist being 18 inches. Interpolation may

be required for other heights from ground to strap attachment.

8. Additional tie downs may be required per the home manufacturer instructions.

9. Ground anchors must be certified by a professional engineer, or registered architect, or listed by a nationally recognized testing laboratory.

10. Ground anchors must be installed to their full depth, and stabilizer plates, if required by the ground anchor listing or certification, must also be installed in accordance with the listing or certification and in accordance with the ground anchor and home manufacturer instructions.

11. Strapping and anchoring equipment must be certified by a registered professional engineer or registered architect or must be listed by a nationally recognized testing agency to resist these specified forces, in accordance with testing procedures in ASTM D 3953—97, Standard Specification for Strapping, Flat Steel and Seals (incorporated by reference, see § 3285.4).

12. A reduced ground anchor or strap working load capacity will require reduced tie-down strap and anchor spacing.

13. Ground anchors must not be spaced closer than the minimum spacing permitted by the listing or certification.

14. Table is based on a 3,150 lbs. working load capacity, and straps must be placed within 2 ft. of the ends of the home.

15. Table is based on a minimum angle of 30 degrees and a maximum of 60 degrees between the diagonal strap and the ground.

16. Table does not consider flood or seismic loads and is not intended for use in flood or seismic hazard areas. In those areas, the anchorage system is to be designed by a professional engineer or architect.

TABLE 3 TO § 3285.402.—MAXIMUM DIAGONAL TIE-DOWN STRAP SPACING, WIND ZONE III.

| Nominal floor width, single section/multi-section | Max. height from ground to diagonal strap attachment | Near beam method I-beam spacing | | Second beam method I-beam spacing | |
|---|---|---|---|---|---|
| | | 82.5 in. | 99.5 in. | 82.5 in. | 99.5 in. |
| 12 ft./24 ft. 144 in. nominal section(s). | 25 in | 5 ft. 1 in | N/A | N/A | N/A |
| | 33 in | 4 ft. 3 in | N/A | N/A | N/A |
| | 46 in | N/A | N/A | N/A | N/A |
| | 67 in | N/A | N/A | N/A | N/A |
| 14 ft./28 ft. 168 in. nominal section(s). | 25 in | 6 ft. 2 in. | 5 ft. 7 in | N/A | N/A |
| | 33 in | 5 ft. 8 in | 4 ft. 9 in | N/A | N/A |
| | 46 in | 4 ft. 8 in | N/A | N/A | N/A |
| | 67 in | N/A | N/A | N/A | N/A |
| 16 ft./32 ft. 180 in. to 192 in. nominal sections. | 25 in | N/A | 6 ft. 3 in | N/A | N/A |
| | 33 in | 6 ft. 1 in | 5 ft. 11 in | N/A | N/A |
| | 46 in | 5 ft. 7 in | 5 ft. 0 in | N/A | N/A |
| | 67 in | 4 ft. 5 in | N/A | N/A | N/A |

**Notes:** 1. Table is based on maximum 90 in. sidewall height.

2. Table is based on maximum 4 in. inset for ground anchor head from edge of floor or wall.

3. Table is based on main rail (I-beam) spacing per given column.

4. Table is based on maximum 4 in. eave width for single-section homes and maximum 12 in. for multi-section homes.

5. Table is based on maximum 20-degree roof pitch (4.3/12).

6. All manufactured homes designed to be located in Wind Zone III must have a vertical tie installed at each diagonal tie location.

7. Table is based upon the minimum height between the ground and the bottom of the floor joist being 18 inches. Interpolation may be required for other heights from ground to strap attachment.

8. Additional tie downs may be required per the home manufacturer instructions.

9. Ground anchors must be certified by a professional engineer, or registered architect, or listed by a nationally recognized testing laboratory.

10. Ground anchors must be installed to their full depth, and stabilizer plates, if required by the ground anchor listing or certification, must also be installed in accordance with the listing or certification and per the ground anchor and home manufacturer instructions.

11. Strapping and anchoring equipment must be certified by a registered professional engineer or registered architect or must be listed by a nationally recognized testing agency to resist these specified forces, in accordance with testing procedures in ASTM D 3953–97, Standard Specification for Strapping, Flat Steel and Seals (incorporated by reference, see § 3285.4).

12. A reduced ground anchor or strap working load capacity will require reduced tie-down strap and anchor spacing.

13. Ground anchors must not be spaced closer than the minimum spacing permitted by the listing or certification.

14. Table is based on a 3,150 lbs. working load capacity, and straps must be placed within 2 ft. of the ends of the home.

15. Table is based on a minimum angle of 30 degrees and a maximum angle of 60 degrees between the diagonal strap and the ground.

16. Table does not consider flood or seismic loads and is not intended for use in flood or seismic hazard areas. In those areas, the anchorage system is to be designed by a professional engineer or architect.

### § 3285.403 Sidewall, over-the-roof, mate-line, and shear wall straps.

If sidewall, over-the-roof, mate-line, or shear wall straps are installed on the home, they must be connected to an anchoring assembly.

### § 3285.404 Severe climatic conditions.

In frost-susceptible soil locations, ground anchor augers must be installed below the frost line, unless the foundation system is frost-protected to prevent the effects of frost heave, in accordance with acceptable engineering practice and § 3280.306 of this chapter and § 3285.312.

### § 3285.405 Severe wind zones.

When any part of a home is installed within 1,500 feet of a coastline in Wind Zones II or III, the manufactured home must be designed for the increased requirements, as specified on the home's data plate (refer to § 3280.5(f) of this chapter) in accordance with acceptable engineering practice. Where site or other conditions prohibit the use of the manufacturer's instructions, a registered professional engineer or registered architect, in accordance with acceptable engineering practice, must design anchorage for the special wind conditions.

### § 3285.406 Flood hazard areas.

Refer to § 3285.302 for anchoring requirements in flood hazard areas.

## Subpart F—Optional Features

### § 3285.501 Home installation manual supplements.

Supplemental instructions for optional equipment or features must be approved by the DAPIA as not taking the home out of conformance with the requirements of this part, or part 3280 of this chapter, and included with the manufacturer installation instructions.

### § 3285.502 Expanding rooms.

The support and anchoring systems for expanding rooms must be installed in accordance with designs provided by the home manufacturer or prepared by a registered professional engineer or registered architect, in accordance with acceptable engineering practice.

### § 3285.503 Optional appliances.

(a) *Comfort cooling systems.* When not provided and installed by the home manufacturer, any comfort cooling systems that are installed must be installed according to the appliance manufacturer's installation instructions.

(1) *Air conditioners.* Air conditioning equipment must be listed or certified by a nationally recognized testing agency for the application for which the unit is intended and installed in accordance with the terms of its listing or certification (see § 3280.714 of this chapter).

(i) *Energy efficiency.*

(A) Site-installed central air conditioning equipment must be sized to meet the home's heat gain requirement, in accordance with Chapter 28 of the 1997 ASHRAE Handbook of Fundamentals (incorporated by reference, see § 3285.4) or ACCA Manual J, Residential Cooling Load, 8th Edition (incorporated by reference, see § 3285.4). Information necessary to calculate the home's heat gain can be found on the home's comfort cooling certificate.

(B) The BTU/hr. rated capacity of the site-installed air conditioning equipment must not exceed the air distribution system's rated BTU/hr. capacity as shown on the home's compliance certificate.

(ii) *Circuit rating.* If a manufactured home is factory-provided with an exterior outlet to energize heating and/or air conditioning equipment, the branch circuit rating on the tag adjacent to this outlet must be equal to or greater than the minimum circuit amperage identified on the equipment rating plate.

(iii) *A-coil units.*

(A) A-coil air conditioning units must be compatible and listed for use with the furnace in the home and installed in accordance with the appliance manufacturer's instructions.

(B) The air conditioner manufacturer instructions must be followed.

(C) All condensation must be directed beyond the perimeter of the home by means specified by the equipment manufacturer.

(2) *Heat pumps.* Heat pumps must be listed or certified by a nationally recognized testing agency for the application for which the unit is intended and installed in accordance with the terms of its listing or certification. (See § 3280.714 of this chapter).

(3) *Evaporative coolers.*

(i) A roof-mounted cooler must be listed or certified by a nationally recognized testing agency for the application for which the unit is intended and installed in accordance with the terms of its listing (see § 3280.714 of this chapter).

(A) Any discharge grill must not be closer than three feet from a smoke alarm.

(B) Before installing a roof-mounted evaporative cooler on-site, the installer must ensure that the roof will support the weight of the cooler.

(C) A rigid base must be provided to distribute the cooler weight over multiple roof trusses to adequately support the weight of the evaporative cooler.

(ii) An evaporative cooler that is not roof-mounted is to be installed in accordance with the requirements of its listing or the equipment manufacturer's instructions, whichever is the more restrictive.

(b) *Fireplaces and wood-stoves.* When not provided by the home manufacturer, fireplaces and wood-stoves including chimneys and air inlets for fireplaces and wood stoves must be listed for use with manufactured homes and must be installed in accordance with their listings.

(c) *Appliance venting.*

(1) All fuel burning heat producing appliances of the vented type except ranges and ovens must be vented to the exterior of the home.

(2) Upon completion, the venting system must comply with all requirements of §§ 3280.707(b) and 3280.710 of the Manufactured Home Construction and Safety Standards in this chapter.

(3) When the vent exhausts through the floor, the vent must not terminate under the home and must extend to the home's exterior and through any skirting that may be installed.

(d) *Clothes dryer exhaust duct system.* A clothes dryer exhaust duct system must conform with and be completed in accordance with the appliance manufacturer instructions and § 3280.708 of this chapter. The vents must exhaust to the exterior of the home, beyond any perimeter skirting installed around it, as shown in Figure to § 3285.503.

BILLING CODE 4210–07–C

**Figure A to § 3285.503 Dryer Exhaust System.**

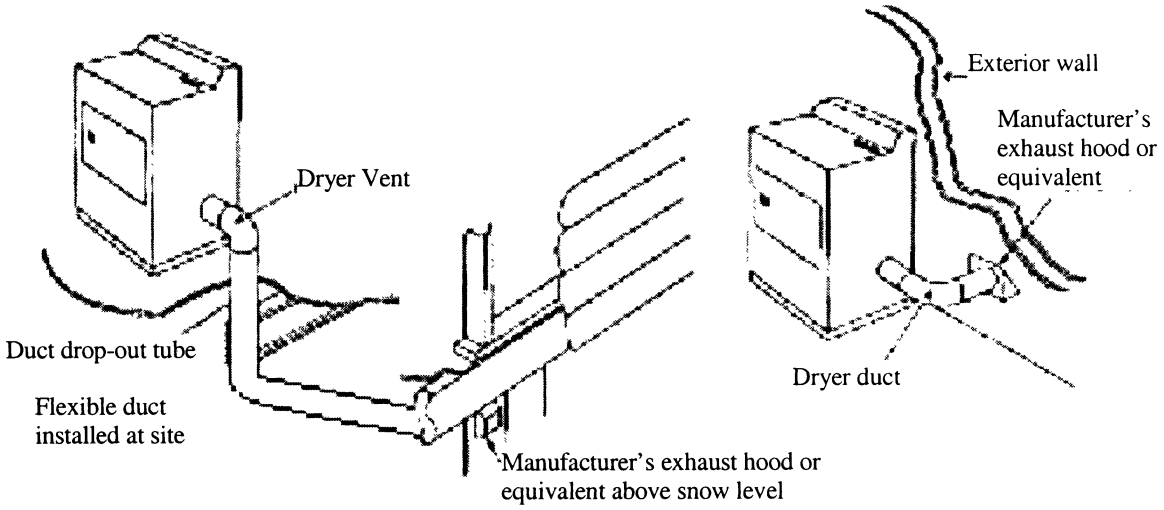


**Notes:**

1. Installation of the exhaust system must be in accordance with the dryer manufacturer instructions.
2. Dryer exhaust system must not contain reverse slope or terminate under the home.

**§ 3285.504 Skirting.**

(a) Skirting, if used, must be of weather-resistant materials or provided with protection against weather deterioration at least equivalent to that provided by a coating of zinc on steel of not less than 0.30 oz./ft.$^2$ of surface coated.

(b) Skirting must not be attached in a manner that can cause water to be trapped between the siding and trim or forced up into the wall cavities trim to which it is attached.

(c) All wood skirting within 6 inches of the ground must be pressure-treated in accordance with AWPA Standard U1 (incorporated by reference, see § 3285.4) for Use Category 4A, Ground Anchor Contact Applications, or be naturally resistant to decay and termite infestations.

(d) Skirting must not be attached in a manner that impedes the contraction and expansion characteristics of the home's exterior covering.

**§ 3285.505 Crawlspace ventilation.**

(a) A crawlspace with skirting must be provided with ventilation openings. The minimum net area of ventilation openings must not be less than one square foot (ft.$^2$) for every 150 square feet (ft.$^2$) of the home's floor area. The total area of ventilation openings may be reduced to one square foot (ft.$^2$) for every 1,500 square feet (ft.$^2$) of the home's floor area, where a uniform 6–mil polyethylene sheet material or other acceptable vapor retarder is installed, according to § 3285.204, on the ground surface beneath the entire floor area of the home.

(b) Ventilation openings must be placed as high as practicable above the ground.

(c) Ventilation openings must be located on at least two opposite sides to provide cross-ventilation.

(d) Ventilation openings must be covered for their full height and width with a perforated corrosion and weather-resistant covering that is designed to prevent the entry of rodents. In areas subject to freezing, the coverings for the ventilation openings must also be of the adjustable type, permitting them to be in the open or closed position, depending on the climatic conditions.

(e) Access opening(s) not less than 18 inches in width and 24 inches in height and not less than three square feet (ft.$^2$) in area must be provided and must be located so that any utility connections located under the home are accessible.

(f) Dryer vents and combustion air inlets must pass through the skirting to the outside. Any surface water runoff from the furnace, air conditioning, or water heater drains must be directed away from under the home or collected by other methods identified in § 3285.203.

## Subpart G—Ductwork and Plumbing and Fuel Supply Systems

**§ 3285.601 Field assembly.**

Home manufacturers must provide specific installation instructions for the proper field assembly of manufacturer-supplied and shipped loose ducts, plumbing, and fuel supply system parts that are necessary to join all sections of the home and are designed to be located underneath the home. The installation instructions must be designed in accordance with applicable requirements of part 3280, subparts G and H, of this chapter, as specified in this subpart.

**§ 3285.602 Utility connections.**

Refer to § 3285.904 for considerations for utility system connections.

**§ 3285.603 Water supply.**

(a) *Crossover.* Multi-section homes with plumbing in both sections require water-line crossover connections to join all sections of the home. The crossover design requirements are located in, and must be designed in accordance with, § 3280.609 of this chapter.

(b) *Maximum supply pressure and reduction.* When the local water supply pressure exceeds 80 psi to the manufactured home, a pressure-reducing valve must be installed.

(c) *Mandatory shutoff valve.*

(1) An identified and accessible shutoff valve must be installed between the water supply and the inlet.

(2) The water riser for the shutoff valve connection must be located underneath or adjacent to the home.

(3) The shutoff valve must be a full-flow gate or ball valve, or equivalent valve.

(d) *Freezing protection.* Water line crossovers completed during installation must be protected from freezing. The freeze protection design requirements are located in, and must

be designed in accordance with, § 3280.603 of this chapter.

(1) If subject to freezing temperatures, the water connection must be wrapped with insulation or otherwise protected to prevent freezing.

(2) In areas subject to freezing or subfreezing temperatures, exposed sections of water supply piping, shutoff valves, pressure reducers, and pipes in water heater compartments must be insulated or otherwise protected from freezing.

(3) *Use of pipe heating cable.* Only pipe heating cable listed for manufactured home use is permitted to be used, and it must be installed in accordance with the cable manufacturer installation instructions.

(e) *Testing procedures.*

(1) The water system must be inspected and tested for leaks after completion at the site. The installation instructions must provide testing requirements that are consistent with § 3280.612 of this chapter.

(2) The water heater must be disconnected when using an air-only test.

**§ 3285.604 Drainage system.**

(a) *Crossovers.* Multi-section homes with plumbing in more than one section require drainage system crossover connections to join all sections of the home. The crossover design requirements are located in, and must be designed in accordance with, § 3280.610 of this chapter.

(b) *Assembly and support.* If portions of the drainage system were shipped loose because they were necessary to join all sections of the home and designed to be located underneath the home, they must be installed and supported in accordance with § 3280.608 of this chapter.

(c) *Proper slopes.* Drains must be completed in accordance with § 3280.610 of this chapter.

(1) Drain lines must not slope less than one-quarter inch per foot, unless otherwise noted on the schematic diagram, as shown in Figure to § 3285.604.

(2) A slope of one-eight inch per foot may be permitted when a clean-out is installed at the upper end of the run.

(d) *Testing procedures.* The drainage system must be inspected and tested for leaks after completion at the site. The installation instructions must provide testing requirements that are consistent with § 3280.612 of this chapter.

BILLING CODE 4210–07–P

**Figure A to § 3285.604 Drain Pipe Slope and Connections.**

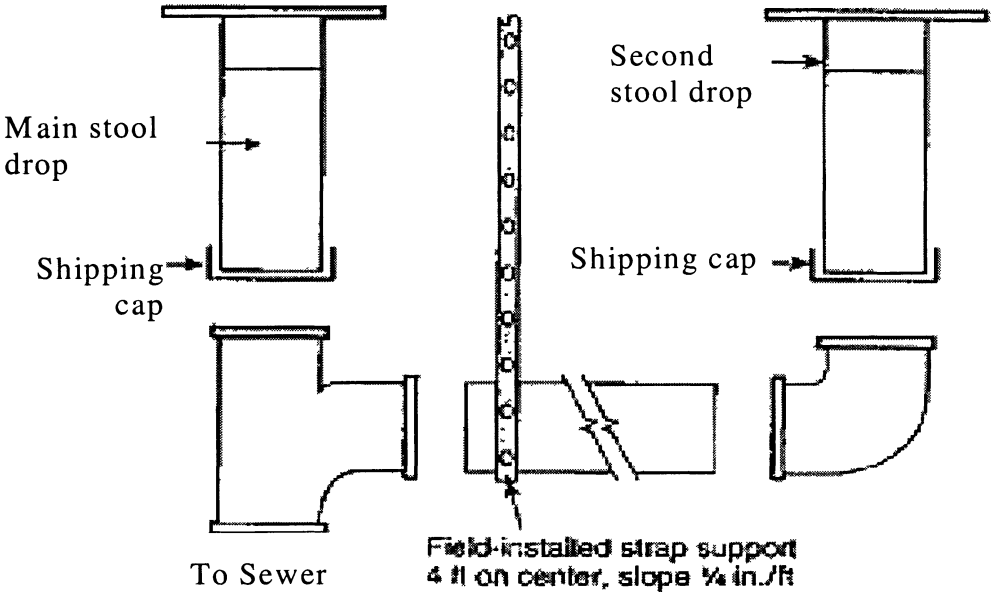


**§ 3285.605 Fuel supply system.**

(a) *Proper supply pressure.* The gas piping system in the home is designed for a pressure that is at least 7 inches of water column [4oz./in.$^2$ or 0.25 psi] and not more than 14 inches of water column [8 oz./in.$^2$ or 0.5 psi]. If gas from any supply source exceeds, or could exceed this pressure, a regulator must be installed if required by the LAHJ.

(b) *Crossovers.*

(1) Multi-section homes with fuel supply piping in both sections require crossover connections to join all sections of the home. The crossover design requirements are located in, and must be designed in accordance with, § 3280.705 of this chapter.

(2) Tools must not be required to connect or remove the flexible connector quick-disconnect.

(c) *Testing procedures.* The gas system must be inspected and tested for leaks after completion at the site. The installation instructions must provide testing requirements that are consistent with § 3280.705 of this chapter.

**§ 3285.606 Ductwork connections.**

(a) Multi-section homes with ductwork in more than one section require crossover connections to complete the duct system of the home. All ductwork connections, including duct collars, must be sealed to prevent air leakage. Galvanized metal straps or tape and mastics listed to UL 181A (incorporated by reference, see § 3285.4), for closure systems with rigid air ducts and connectors, or UL 181B (incorporated by reference, see § 3285.4), for closure systems with flexible air ducts and connectors, must be used around the duct collar and secured tightly to make all connections.

(b) If metal straps are used, they must be secured with galvanized sheet metal screws.

(c) Metal ducts must be fastened to the collar with a minimum of three

galvanized sheet metal screws equally spaced around the collar.

(d) Air conditioning or heating ducts must be installed in accordance with applicable requirements of the duct manufacturer installation instructions.

(e) The duct must be suspended or supported above the ground by straps or other means that are spaced at a maximum distance not to exceed 4′–0″ or as otherwise permitted by the installation instructions. When straps are used to support a flexible type duct, the straps must be at least ½″ wider than the spacing of the metal spirals encasing the duct. The ducts must be installed such that the straps cannot slip between any two spirals and arranged under the floor to prevent compression or kinking in any location, as shown in Figures A and B to this section. In-floor crossover ducts are permitted, in accordance with § 3285.606(g).

(f) Crossover ducts outside the thermal envelope must be insulated with materials that conform to designs consistent with part 3280, subpart F of this chapter.

(g) In-floor or ceiling crossover duct connections must be installed and sealed to prevent air leakage.

## Figure A to §3285.606 – Crossover Duct Installation with Two Connecting Ducts.

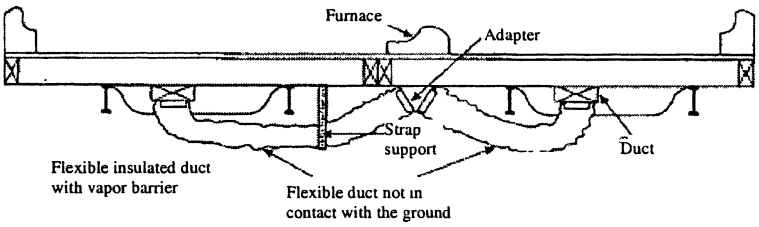


**Notes:**

1. This system is typically used when a crossover duct has not been built into the floor and the furnace is outside the I–Beam. With this type of installation, it is necessary for two flexible ducts to be installed.

2. The crossover duct must be listed for exterior use.

## Figure B to §3285.606 Crossover Duct Installation with One Connecting Duct.

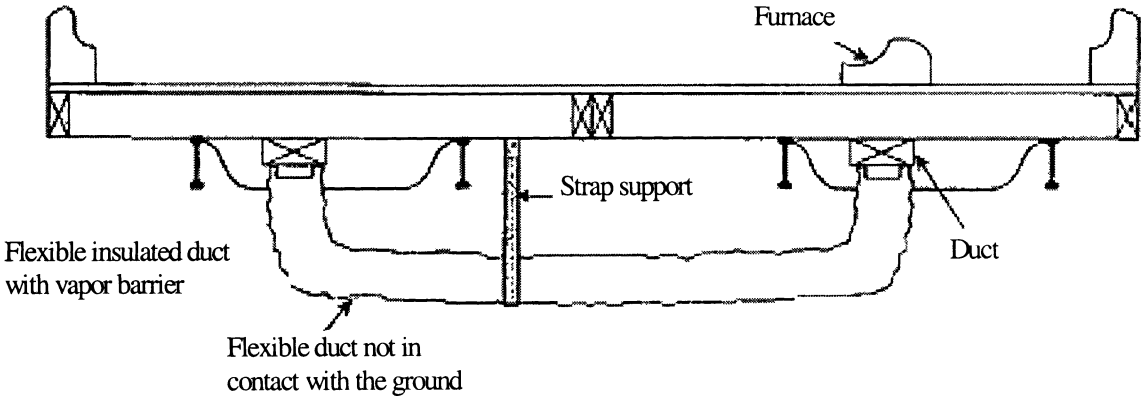


**Notes:**

1. This system is typically used when a crossover duct has not been built into the floor and the furnace is situated directly over the main duct in one section of the home. A single flexible duct is then used to connect the two sections to each other.

2. The crossover duct must be listed for exterior use.

### Subpart H—Electrical Systems and Equipment

#### § 3285.701 Electrical crossovers.

Multi-section homes with electrical wiring in more than one section require crossover connections to join all sections of the home. The crossover must be designed in accordance with part 3280, subpart I of this chapter, and completed in accordance with the directions provided in the installation instructions.

#### § 3285.702 Miscellaneous lights and fixtures.

(a) When the home is installed, exterior lighting fixtures, ceiling-suspended (paddle) fans, and chain-hung lighting fixtures are permitted to be installed in accordance with their listings and part 3280, subpart I of this chapter.

(b) *Grounding.* (1) All the exterior lighting fixtures and ceiling fans installed per § 3285.702(a) must be grounded by a fixture-grounding device or by a fixture-grounding wire.

(2) For chain-hung lighting fixtures, as shown in Figure A to this section, both

a fixture-grounding device and a fixture-grounding wire must be used. The identified conductor must be the neutral conductor.

(c) Where lighting fixtures are mounted on combustible surfaces such as hardboard, a limited combustible or noncombustible ring, as shown in Figures A and B to this section, must be installed to completely cover the combustible surface exposed between the fixture canopy and the wiring outlet box.

(d) *Exterior lights.* (1) The junction box covers must be removed and wire-to-wire connections must be made using listed wire connectors.

(2) Wires must be connected black-to-black, white-to-white, and equipment ground-to-equipment ground.

(3) The wires must be pushed into the box, and the lighting fixture must be secured to the junction box.

(4) The lighting fixture must be caulked around its base to ensure a watertight seal to the sidewall.

(5) The light bulb must be installed and the globe must be attached.

(e) *Ceiling fans.* (1) Ceiling-suspended (paddle) fans must be connected to junction box listed and marked for ceiling fan application, in accordance with Article 314.27(b) of the National Electrical Code, NFPA No. 70–2005 (incorporated by reference, see § 3285.4); and

(2) The ceiling fan must be installed with the trailing edges of the blades at least 6 feet 4 inches above the finished floor; and

(3) The wiring must be connected in accordance with the product manufacturer installation instructions.

(f) *Testing.* (1) After completion of all electrical wiring and connections, including crossovers, electrical lights, and ceiling fans, the electrical system must be inspected and tested at the site, in accordance with the testing requirements of § 3280.810(b) of this chapter.

(2) The installation instructions must indicate that each manufactured home must be subjected to the following tests:

(i) An electrical continuity test to ensure that metallic parts are effectively bonded;

(ii) Operational tests of all devices and utilization equipment, except water heaters, electric ranges, electric furnaces, dishwashers, clothes washers/dryers, and portable appliances, to demonstrate that they are connected and in working order; and

(iii) For electrical equipment installed or completed during installation, electrical polarity checks must be completed to determine that connections have been made properly. Visual verification is an acceptable electrical polarity check.

**Figure A to § 3285.702 Typical Installation of Chain-Hung Lighting Fixture.**

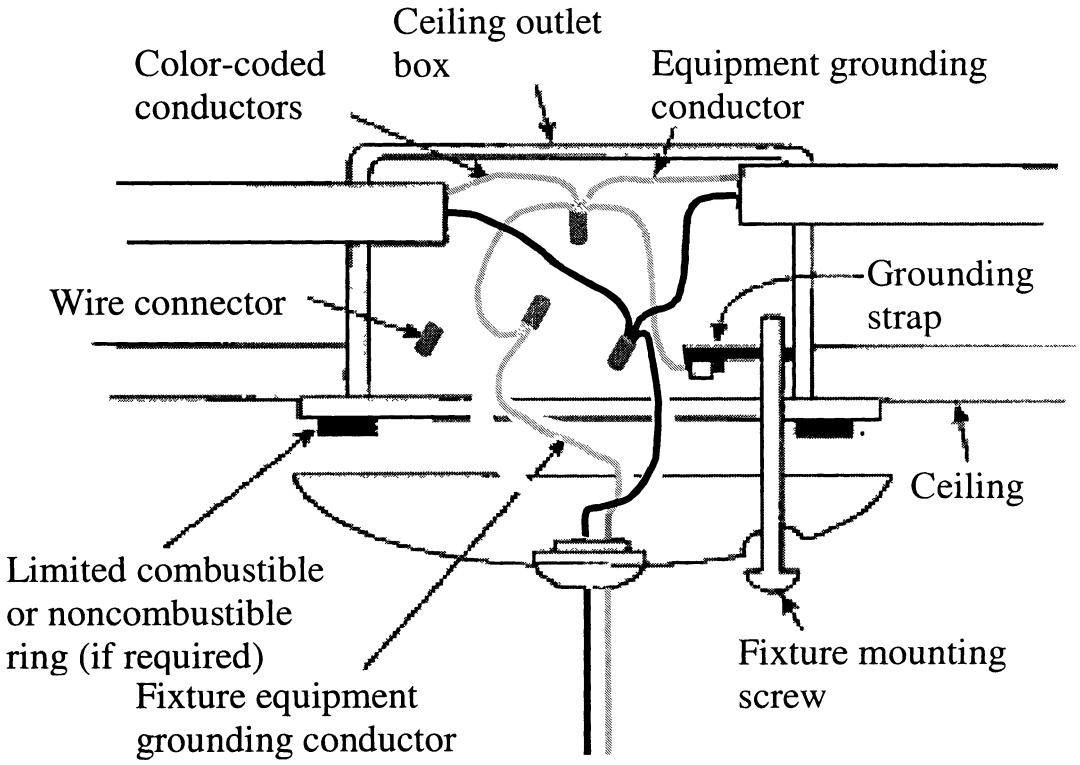

**Figure B to § 3285.702 Typical Installation of Surface-Mounted Exterior Lighting Fixture.**

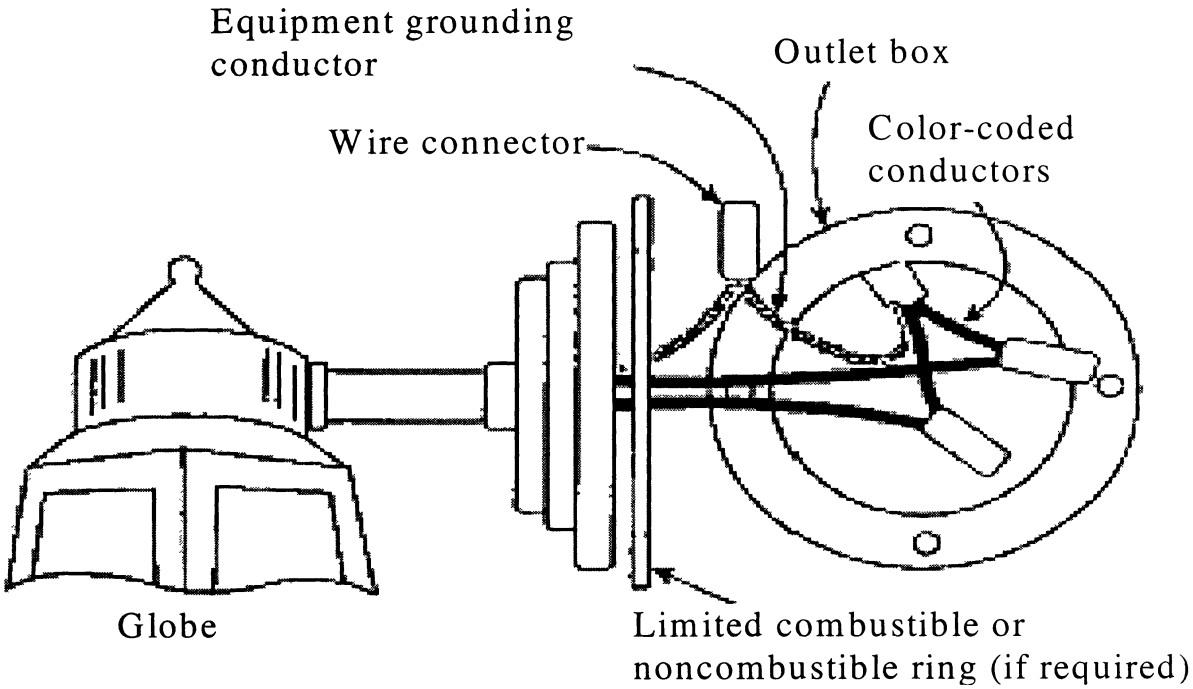


**§ 3285.703 Smoke alarms.**

Smoke alarms must be functionally tested in accordance with applicable requirements of the smoke alarm manufacturer instructions and must be consistent with § 3280.208 of this chapter.

**§ 3285.704 Telephone and cable TV.**

Refer to § 3285.906 for considerations pertinent to installation of telephone and cable TV.

## Subpart I—Exterior and Interior Close-Up

**§ 3285.801 Exterior close-up.**

(a) Exterior siding and roofing necessary to join all sections of the home must be installed according to the product manufacturer installation instructions and must be fastened in accordance with designs and manufacturer instructions, consistent with §§ 3280.305 and 3280.307 of this chapter. Exterior close-up strips/trim must be fastened securely and sealed with exterior sealant (see figure A to this section).

(b) *Joints and seams.* All joints and seams in exterior wall coverings that were disturbed during location of the home must be made weatherproof.

(c) Prior to installing the siding, the polyethylene sheeting covering exterior walls for transit must be completely removed.

(d) Prior to completing the exterior close-up, any holes in the roofing must be made weatherproof and sealed with a sealant or other material that is suitable for use with the roofing in which the hole is made.

(e) *Mate-line gasket.* The home manufacturer must provide materials and designs for mate-line gaskets or other methods designed to resist the entry of air, water, water vapor, insects, and rodents at all mate-line locations exposed to the exterior (see Figure B to this section).

(f) *Hinged roofs and eaves.* Hinged roofs and eaves must be completed during installation in compliance with all requirements of the Manufactured Home Construction and Safety Standards (24 CFR part 3280) and the Manufactured Home Procedural and Enforcement Regulations (24 CFR part 3282). Unless exempted by the following provisions, hinged roofs are also subject to a final inspection for compliance with the Manufactured Home Construction and Safety Standards (24 CFR part 3280) by the IPIA or a qualified independent inspector acceptable to the IPIA. Homes with hinged roofs that are exempted from IPIA inspection are instead to be completed and inspected in accordance with the Manufactured Home Installation Program (24 CFR part 3286). This includes homes:

(1) That are designed to be located in Wind Zone I;

(2) In which the pitch of the hinged roof is less than 7:12; and

(3) In which fuel burning appliance flue penetrations are not above the hinge.

## FIGURE A to §3285.801 Installation of Field-Applied Horizontal Lap Siding

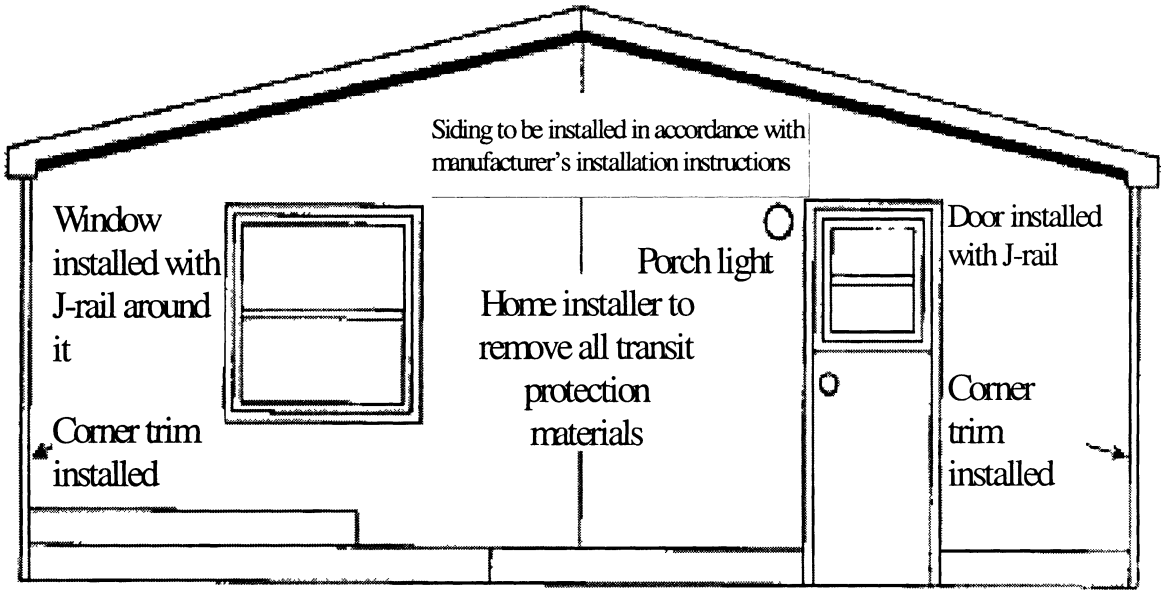


**Notes:**

1. Multi-section homes with horizontal-lap siding can be shipped with no siding on the front and rear end walls.
2. The manufacturer must install doors/windows trimmed with J-rail or the equivalent and protect all exposed materials not designed for exposure to the weather with plastic sheeting for transport. Siding, starter trim, and vents may be shipped loose in the home for installation on set-up.
3. All home installers must ensure that all field installed trim, windows, doors, and other openings are properly sealed according to the siding manufacturer installation instructions.

## Figure B to § 3285.801 Mate-Line Gasket.

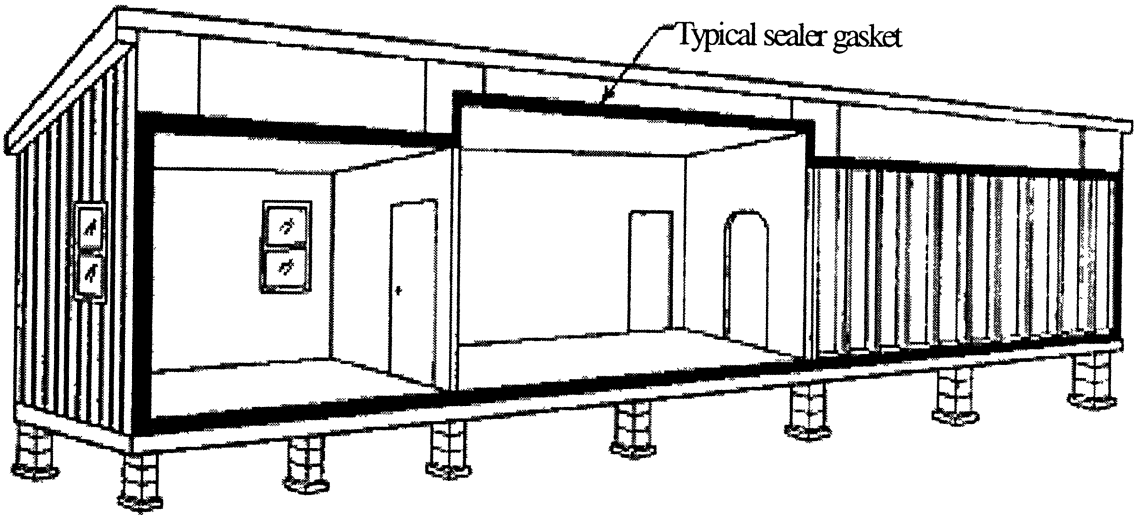


**Note:** On multi-section manufactured homes, install the sealer gasket on the ceiling, end walls, and floor mate-line prior to joining the sections together.

**§ 3285.802 Structural interconnection of multi-section homes.**

(a) For multi-section homes, structural interconnections along the interior and exterior at the mate-line are necessary to join all sections of the home.

(b) Structural interconnection must be designed in accordance with the requirements located in § 3280.305 of this chapter to ensure a completely integrated structure.

(c) Upon completion of the exterior close-up, no gaps are permitted between the structural elements being interconnected along the mate-line of multi-section homes. However, prior to completion of the exterior close-up, gaps that do not exceed one inch are permitted between structural elements provided:

(1) The gaps are closed before completion of close-up;

(2) The home sections are in contact with each other; and

(3) The mating gasket is providing a proper seal. All such gaps must be shimmed with dimensional lumber, and fastener lengths used to make connections between the structural elements must be increased to provide adequate penetration into the receiving member.

**§ 3285.803 Interior close-up.**

(a) All shipping blocking, strapping, or bracing must be removed from appliances, windows, and doors.

(b) Interior close up items necessary to join all sections of the home or items subject to transportation damage may be packaged or shipped with the home for site installation.

(c) Shipped-loose wall paneling necessary for the joining of all sections of the home must be installed by using polyvinyl acetate (PVA) adhesive on all framing members and fastened with minimum 1½ inch long staples or nails at 6 inches on center panel edges and 12 inches on center in the field, unless alternative fastening methods are permitted in the installation instructions (see Figure A to § 3285.803).

## FIGURE A to §3285.803 - Installation of Interior Field-Applied Panels.

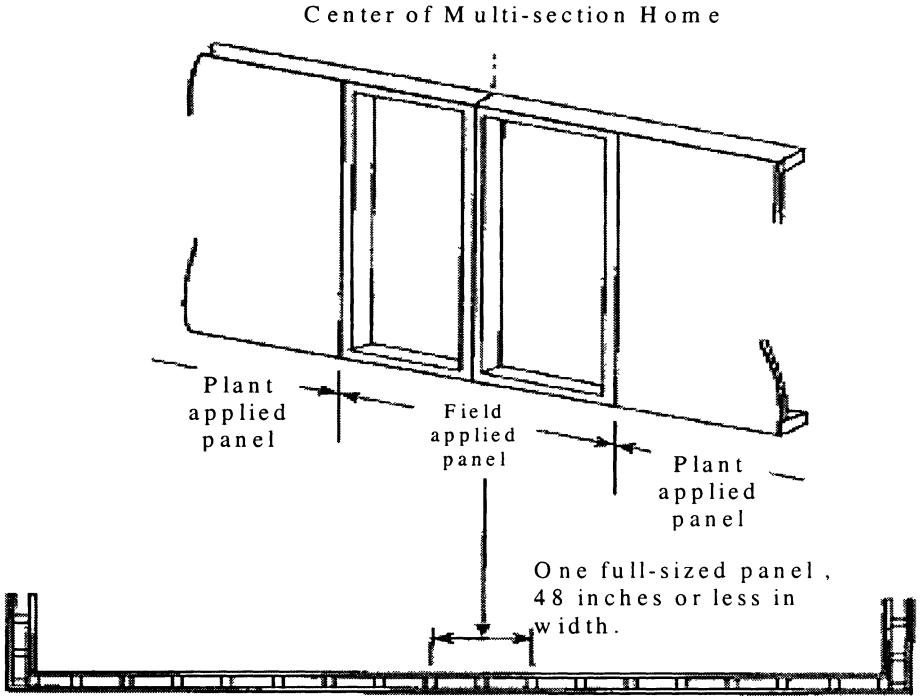


**Note:** Specific designs must be approved by a DAPIA and included in the home manufacturer installation instructions.

**§ 3285.804 Bottom board repair.**

(a) The bottom board covering must be inspected for any loosening or areas that might have been damaged or torn during installation or transportation. Any missing insulation is to be replaced prior to closure and repair of the bottom board.

(b) Any splits or tears in the bottom board must be resealed with tape or patches in accordance with methods provided in the manufacturers installation instructions.

(c) Plumbing P-traps must be checked to be sure they are well-insulated and covered.

(d) All edges of repaired areas must be taped or otherwise sealed.

### Subpart J—Optional Information for Manufacturer's Installation Instructions

**§ 3285.901 General.**

The planning and permitting processes, as well as utility connection, access, and other requirements, are outside of HUD's authority and may be governed by LAHJs. These Model Installation Standards do not attempt to comprehensively address such requirements. However, HUD recommends that the manufacturer's installation instructions include the information and advisories in this Subpart J, in order to protect the manufactured home, as constructed in accordance with the MHCSS.

**§ 3285.902 Moving manufactured home to location.**

It is recommended that the installation instructions indicate that the LAHJ be informed before moving the manufactured home to the site. It is also recommended that the installation instructions indicate that the manufactured home is not to be moved to the site until the site is prepared in accordance with subpart C of this part and when the utilities are available as required by the LAHJ. Examples of related areas that might be addressed in the installation instructions for meeting this recommendation include:

(a) *Access for the transporter.* Before attempting to move a home, ensure that

the transportation equipment and home can be routed to the installation site and that all special transportation permits required by the LAHJ have been obtained.

(b) *Drainage structures.* Ditches and culverts used to drain surface runoff meet the requirements of the LAHJ and are considered in the overall site preparation.

**§ 3285.903 Permits, alterations, and on-site structures.**

It is recommended that the installation instructions include the following information related to permits, alterations, and on-site structures:

(a) *Issuance of permits.* All necessary LAHJ fees should be paid and permits should be obtained, which may include verification that LAHJ requirements regarding encroachments in streets, yards, and courts are obeyed and that permissible setback and fire separation distances from property lines and public roads are met.

(b) *Alterations.* Prior to making any alteration to a home or its installation, contact the LAHJ to determine if plan approval and permits are required.

(c) *Installation of on-site structures.* Each accessory building and structure is designed to support all of its own live and dead loads, unless the structure, including any attached garage, carport, deck, and porch, is to be attached to the manufactured home and is otherwise included in the installation instructions or designed by a registered professional engineer or registered architect.

**§ 3285.904 Utility system connections.**

(a) It is recommended that the manufacturer's installation instructions indicate the following procedures be used prior to making any utility system connection:

(1) Where an LAHJ and utility services are available, that the LAHJ and all utility services each be consulted before connecting the manufactured home to any utilities, or

(2) Where no LAHJ exists and utility services are available, that the utilities be consulted before connecting the manufactured home to any utility service; or

(3) In rural areas where no LAHJ or utility services are available, that a professional be consulted prior to making any system connections.

(b) *Qualified personnel.* Only qualified personnel familiar with local requirements are permitted to make utility site connections and conduct tests.

(c) *Drainage system.* The main drain line must be connected to the site's sewer hookup, using an elastomeric coupler or by other methods acceptable to the LAHJ, as shown in Figure A to this section.

(d) *Fuel supply system.*

(1) *Conversion of gas appliances.* A service person acceptable to the LAHJ must convert the appliance from one type of gas to another, following instructions by the manufacturer of each appliance.

(2) *Orifices and regulators.* Before making any connections to the site supply, the inlet orifices of all gas-burning appliances must be checked to ensure they are correctly set up for the type of gas to be supplied.

(3) *Connection procedures.* Gas-burning appliance vents must be inspected to ensure that they are connected to the appliance and that roof jacks are properly installed and have not come loose during transit.

(4) *Gas appliance start-up procedures.* The LAHJ should be consulted concerning the following gas appliance startup procedures:

(i) One at a time, opening equipment shutoff valves, lighting pilot lights when provided, and adjusting burners and spark igniters for automatic ignition systems, in accordance with each appliance manufacturer instructions.

(ii) Checking the operation of the furnace and water heater thermostats.

**Figure A to § 3285.904 – Connection to Site Sewer.**

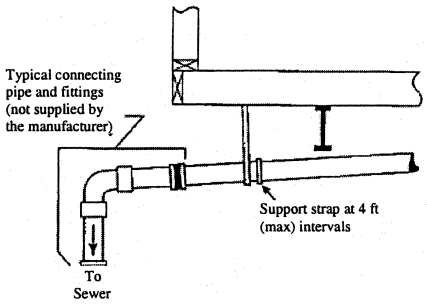


**Note:** Fittings in the drainage system that are subject to freezing, such as P-traps in the floor, are protected with insulation by the manufacturer. Insulation must be replaced if it is removed for access to the P-trap.

**§ 3285.905 Heating oil systems.**

It is recommended that the installation instructions include the following information related to heating oil systems, when applicable:

(a) Homes equipped with oil burning furnaces should have their oil supply tank and piping installed and tested on-site, in accordance with NFPA 31, Standard for the Installation of Oil Burning Equipment, 2001 (incorporated by reference, see § 3285.4) or the LAHJ, whichever is more stringent.

(b) The oil burning furnace manufacturer's instructions should be consulted for pipe size and installation procedures.

(c) Oil storage tanks and pipe installations should meet all applicable local regulations.

(d) *Tank installation requirements.*

(1) The tank should be located where it is accessible to service and supply and where it is safe from fire and other hazards.

(2) In flood hazard areas, the oil storage tank should be anchored and elevated to or above the design flood elevation, or anchored and designed to prevent flotation, collapse, or permanent lateral movement during the design flood.

(3) *Leak test procedure.* Before the system is operated, it should be checked for leaks in the tank and supply piping, in accordance with NFPA 31, Standard for the Installation of Oil Burning Equipment, 2001 (incorporated by reference, see § 3285.4) or the requirements of the LAHJ, whichever is more stringent.

**§ 3285.906 Telephone and cable TV.**

It is recommended that the installation instructions explain that

telephone and cable TV wiring should be installed in accordance with requirements of the LAHJ and the National Electrical Code, NFPA No. 70–2005 (incorporated by reference, see § 3285.4).

**§ 3285.907 Manufacturer additions to installation instructions.**

A manufacturer may include in its installation instructions items that are not required by this chapter as long as the items included by the manufacturer are consistent with the Model Installation Standards in this part and do not take the manufactured home out of compliance with the MHCSS.

Dated: September 18, 2007.

**Brian D. Montgomery,**

*Assistant Secretary for Housing—Federal Housing Commissioner.*

[FR Doc. 07–5004 Filed 10–18–07; 8:45 am]

BILLING CODE 4210–67–P