DEPARTMENT OF TRANSPORTATION

National Highway Traffic Safety Administration

49 CFR Part 571

[Docket No. NHTSA–2007–0014]

RIN 2127–AK09

Federal Motor Vehicle Safety Standards; Seating Systems, Occupant Crash Protection, Seat Belt Assembly Anchorages, School Bus Passenger Seating and Crash Protection

AGENCY: National Highway Traffic Safety Administration (NHTSA), Department of Transportation (DOT).

ACTION: Notice of proposed rulemaking (NPRM).

SUMMARY: NHTSA issued a report in 2002 on the results of a comprehensive school bus research program examining ways of further improving school bus safety. Based on that research, we are now proposing several upgrades to the school bus passenger crash protection requirements.

For new school buses of 4,536 kilograms (10,000 pounds) or less gross vehicle weight rating (GVWR), we propose to require lap/shoulder belts in lieu of the lap belts that are currently specified. For school buses with gross vehicle weight ratings (GVWR) greater than 4,536 kilograms (kg) (10,000 pounds), this NPRM provides guidance to State and local jurisdictions on the subject of installing seat belts. Each State or local jurisdiction would continue to decide whether to install belts on these large school buses. Where State or local decisions are made to install lap or lap/shoulder belts on large school buses, this NPRM proposes performance requirements for those voluntarily-installed seat belts on large school buses manufactured after the proposed effective date.

Other changes to school bus safety requirements are also proposed, including raising the height of seat backs from 20 inches to 24 inches on all new school buses.

DATES: Comments must be received on or before January 22, 2008.

ADDRESSES: You may submit comments to the docket number identified in the heading of this document by any of the following methods:

- *Federal eRulemaking Portal:* Go to *http://www.regulations.gov.* Follow the online instructions for submitting comments.
- *Mail:* Docket Management Facility, M–30, U.S. Department of Transportation, West Building, Ground Floor, Rm. W12–140, 1200 New Jersey Avenue, SE., Washington, DC 20590.
- *Hand Delivery or Courier:* West Building Ground Floor, Room W12–140, 1200 New Jersey Avenue, SE., between 9 a.m. and 5 p.m. Eastern Time, Monday through Friday, except Federal holidays.
- *Fax:* (202) 493–2251.

Regardless of how you submit your comments, you should mention the docket number of this document.

You may call the Docket at 202–366–9324.

Instructions: For detailed instructions on submitting comments and additional information on the rulemaking process, see the Public Participation heading of the **SUPPLEMENTARY INFORMATION** section of this document. Note that all comments received will be posted without change to *http://www.regulations.gov,* including any personal information provided.

Privacy Act: Please see the Privacy Act heading under Rulemaking Analyses and Notices.

FOR FURTHER INFORMATION CONTACT: For non-legal issues, Mr. Charles Hott, Office of Vehicle Safety Standards (telephone: 202–366–0247) (fax: 202–366–4921). Mr. Hott's mailing address is National Highway Traffic Safety Administration, NVS–113, 1200 New Jersey Avenue, SE., Washington, DC 20590.

For legal issues, Ms. Dorothy Nakama, Office of the Chief Counsel (telephone: 202–366–2992) (fax: 202–366–3820). Ms. Nakama's mailing address is National Highway Traffic Safety Administration, NCC–112, 1200 New Jersey Avenue, SE., Washington, DC 20590.

SUPPLEMENTARY INFORMATION:

Table of Contents

I. Introduction
II. Background
III. The Issue of Seat Belts on Large School Buses
IV. Studies
V. Federal Guidance on Belts on Large Buses
  a. NHTSA School Bus Research Results
  b. Agency Recommended Best Practices
  c. Guidance on Lap Belts on Large School Buses
VI. Proposed Upgrades to Occupant Crash Protection
  a. Improving the Compartmentalized School Bus Interior of Both Small and Large School Buses
  b. Additional Occupant Protection Requirements for Small School Buses (School Buses With a GVWR of 4,536 kg (10,000 lb) or Less)
  c. Additional Occupant Protection Requirements for Large School Buses With Voluntarily-Installed Lap/Shoulder Seat Belts
  d. Additional Requirements for Large School Buses with Voluntarily-Installed Lap Belts
VII. Quasi-Static Test for Lap/Shoulder Belts on Small and Large School Buses
  a. Stage 1: Torso Belt Anchorage Displacement
  b. Stage 2: Energy Absorption Capability of the Seat Back
  c. Request for Comments
VIII. Lead Time
IX. Rulemaking Analyses and Notices
X. Public Participation
Appendix A to the Preamble—Proposed Amendments to Federal Motor Vehicle Safety Standards

I. Introduction

This document proposes to upgrade the school bus occupant protection requirements of the Federal motor vehicle safety standards, primarily by amendments to Federal Motor Vehicle Safety Standard No. (FMVSS) No. 222, ''School bus passenger seating and crash protection'' (49 CFR 571.222), and by amendments to FMVSS Nos. 207, 208, and 210. It also provides guidance to state and local jurisdictions on the subject of installing seat belts on large school buses (school buses with a GVWR greater than 4,536 kilograms (kg) (10,000 pounds (lb)) and asks for comments on the agency's consideration of ''best practices'' concerning the belts on the large buses.[1]

This NPRM's most significant proposed changes to FMVSS No. 222 involve:

- Increasing the minimum seat back height requirement from 20 inches from the seat's seating reference point (SgRP) to 24 inches for all school buses;
- Requiring small school buses to have a lap/shoulder belt at each passenger seating position (the buses are currently required to have lap belts);
- Incorporating test procedures into the standard to test lap/shoulder belts in small school buses and voluntarily-installed lap/shoulder belts in large school buses to ensure both the strength of the anchorages and the compatibility of the seat with compartmentalization; and,
- Requiring all school buses with seat bottom cushions that are designed to flip-up, typically for easy cleaning, to have a self-latching mechanism.

[1] ''School bus'' is defined in 49 CFR § 571.3 as a bus that is sold, or introduced in interstate commerce, for purposes that include carrying students to and from school or related events, but does not include a bus designed and sold for operation as a common carrier in urban transportation. A ''bus'' is a motor vehicle, except a trailer, designed for carrying more than 10 persons. In this NPRM, when we refer to ''large'' school buses, we refer to those school buses with GVWRs of more than 4,536 kg (10,000 lb). These large school buses may transport as many as 90 students. ''Small'' school buses are school buses with a GVWR of 4,536 kg (10,000 lb) or less. Generally, these small school buses seat 15 persons or fewer, or have one or two wheelchair seating positions.

The proposed guidance to state and local jurisdictions on best practices of installing seat belts on large school buses acknowledges that, in terms of the optimum passenger crash protection that can be afforded an individual passenger on a large school bus, a lap/shoulder belt system, together with compartmentalization, would afford that optimum protection. Thus, we encourage providers to consider lap/shoulder belts on large school buses. However, installing current lap/shoulder belts on large school buses would reduce the passenger carrying capacity of large buses. If children were diverted to other means of transport to school, such as transport by smaller, private vehicles, walking, or biking, the belts on the buses could result in an overall disbenefit to pupil transportation safety due to the children displaced from the large school buses having to find less safe modes of transportation to get to or from school or related events. Thus, we are not proposing to require lap/shoulder belts on large school buses, and we recommend providers to ascertain whether installing lap/shoulder belts would reduce the number of children that are transported to school on large school buses.

II. Background

The Motor Vehicle and Schoolbus Safety Amendments of 1974 directed NHTSA to issue motor vehicle safety standards applicable to school buses and school bus equipment. In response to this legislation, NHTSA revised several of its safety standards to improve existing requirements for school buses, extended ones for other vehicle classes to those buses, and issued new safety standards exclusively for school buses. FMVSS No. 222, one of a set of new standards for school buses, improves protection to school bus passengers during crashes and sudden driving maneuvers.

Effective since 1977, FMVSS No. 222 contains occupant protection requirements for school bus seating positions and restraining barriers. Its requirements for school buses with GVWR's of 4,536 kg (10,000 lb) or less differ from those set for school buses with GVWR's greater than 4,536 kg (10,000 lb), because the ''crash pulse'' or deceleration experienced by the small school buses is more severe than that of the large buses in similar collisions. For the small school buses, the standard includes requirements that all seating positions must be equipped with properly installed lap or lap/shoulder seat belt assemblies and anchorages for passengers.[2] NHTSA decided that seat belts were necessary on small school buses to provide adequate crash protection for the occupants. For the large school buses, FMVSS No. 222 relies on requirements for ''compartmentalization'' to provide passenger crash protection. Investigations of school bus crashes prior to issuance of FMVSS No. 222 found the school bus seat was a significant factor in causing injury. NHTSA found that the seat failed the passengers in three principal respects: by being too weak, too low, and too hostile (39 FR 27584; July 30, 1974). In response to this finding, NHTSA developed a set of requirements which comprise the ''compartmentalization'' approach.

Compartmentalization ensures that passengers are cushioned and contained by the seats in the event of a school bus crash by requiring school bus seats to be positioned in a manner that provides a compact, protected area surrounding each seat. If a seat is not compartmentalized by a seat back in front of it, compartmentalization must be provided by a padded and protective restraining barrier. The seats and restraining barriers must be strong enough to maintain their integrity in a crash yet flexible enough to be capable of deflecting in a manner which absorbs the energy of the occupant. They must meet specified height requirements and be constructed, by use of substantial padding or other means, so that they provide protection when they are impacted by the head and legs of a passenger. Compartmentalization minimizes the hostility of the crash environment and limits the range of movement of an occupant. The compartmentalization approach ensures that high levels of crash protection are provided to each passenger independent of any action on the part of the occupant.

III. The Issue of Seat Belts on Large School Buses

NHTSA has considered the question of whether seat belts should be required on large school buses from the inception of compartmentalization and the school bus safety standards. NHTSA has been repeatedly asked to require belts on buses, and has repeatedly concluded that compartmentalization provides a high level of safety protection that obviates the safety need for a Federal requirement necessitating the installation of seat belts. Further, the agency has been acutely aware that a decision on requiring seat belts in large school buses cannot ignore the implications of such a requirement on pupil transportation costs. The agency has been attentive to the fact that, as a result of requiring belts on large school buses, school bus purchasers would have to buy belt-equipped vehicles regardless of whether seat belts would be appropriate for their needs. NHTSA has concluded that those costs should not be imposed on all purchasers of school buses when large school buses are currently very safe. In the area of school transportation especially, where a number of needs are competing for limited funds, persons responsible for school transportation might want to consider other alternative investments to improve their pupil transportation programs which can be more effective at reducing fatalities and injuries than seat belts on large school buses, such as by acquiring additional new school buses to add to their fleet, or implementing improved pupil pedestrian and driver education programs. Since each of these efforts competes for limited funds, the agency has maintained that those administrators should decide how their funds should be allocated.

IV. Studies

Nonetheless, throughout the past 30 years that compartmentalization and the school bus safety standards have been in effect, the agency has openly and continuously considered the merits of a seat belt requirement for large school buses.[3] The issue has been closely analyzed by other parties as well, such as the National Transportation Safety Board, and the National Academy of Sciences. Various reports have been issued, the most significant of which are described below.

[2] Lap/shoulder belts and appropriate anchorages for the driver and front passenger (if provided) seating position, lap belts and appropriate anchorages for all other passenger seating positions.

[3] Through the years, NHTSA has been petitioned about seat belts on large school buses. (See, e.g., denials of petitions to require seat belt anchorages, 41 FR 28506 (July 12, 1976), 48 FR 47032 (October 17, 1983); response to petition for rulemaking to prohibit the installation of lap belts on large school buses, 71 FR 40057 (July 14, 2006).) In a letter dated February 16, 2007, the National Association of Pupil Transportation (NAPT) petitioned the agency ''to initiate rulemaking on occupant protection in school buses.'' NAPT said that it did not support the installation of lap belts in large school buses, nor the installation of lap/shoulder belts. NAPT stated it ''will only support changes to compartmentalization when we are sure that those changes will not compromise student safety in any way.'' NAPT requested that the agency review FMVSS No. 222, ''with the goal of establishing a safety system that will definitively enhance the current passenger crash protection for all children that ride a school bus.'' NAPT also advocated a public education program emphasizing the importance of safe school bus transportation.

Studies

• *National Transportation Safety Board, 1987*

In 1987, the National Transportation Safety Board (NTSB) reported on a study of forty-three post-standard school bus crashes investigated by the Safety Board. NTSB concluded that most fatalities and injuries in school bus crashes occurred because the occupant seating positions were directly in line with the crash forces, and that seat belts would not have prevented those injuries and fatalities. (NTSB/SS–87/01, Safety Study, Crashworthiness of Large Post-standard School Buses, March 1987, National Transportation Safety Board.)

• *National Academy of Sciences, 1989*

A 1989 National Academy of Sciences (NAS) study concluded that the overall potential benefits of requiring seat belts on large school buses were insufficient to justify a Federal mandate for installation. The NAS also stated that funds used to purchase and maintain seat belts might be better spent on other school bus safety programs with the potential to save more lives and reduce more injuries. (Special Report 222, Improving School Bus Safety, National Academy of Sciences, Transportation Research Board, Washington, DC, 1989.)

• *National Transportation Safety Board, 1999*

In 1999, NTSB reported on six school bus crashes it investigated in which passenger fatalities or serious injuries occurred away from the area of vehicle impact. NTSB found compartmentalization to be an effective means of protecting passengers in school bus crashes. However, because many of those passengers injured in the six crashes were believed to have been thrown from their compartments, NTSB believed other means of occupant protection should be examined. (NTSB/SIR–99/04, Highway Safety Report, Bus Crashworthiness Issues, September 1999, National Transportation Safety Board.)

• *National Academy of Science, 2002*

In 2002, NAS published a study that analyzed the safety of various transportation modes used by school children to get to and from school and school-related activities. The report concluded that each year there are approximately 815 school transportation fatal injuries per year. Two percent were school bus-related, compared to 22 percent due to walking/bicycling, and 75 percent from passenger car crashes, especially those with teen drivers. The report stated that changes in any one characteristic of school travel can lead to dramatic changes in the overall risk to the student population. Thus, NAS concluded, it is important for school transportation decisions to take into account all potential aspects of changes to requirements to school transportation. (Special Report 269, ''The Relative Risks of School Travel: A National Perspective and Guidance for Local Community Risk Assessment,'' Transportation Research Board of the National Academies, 2002.)

• *National Highway Traffic Safety Administration, 2002*

In 2002, NHTSA issued a Congressional Report that detailed occupant safety on school buses and analyzed options for improving occupant safety. NHTSA concluded that compartmentalization effectively lowered injury measures by distributing crash forces with the padded seating surface. Lap belts showed little to no benefit in reducing serious/fatal injuries. The agency determined that properly used combination lap and shoulder belts have the potential to be effective in reducing fatalities and injuries for not only frontal collisions, but also rollover crashes where belt systems are particularly effective in reducing ejection. However, the addition of lap/shoulder belts on buses would increase capital costs and reduce seating capacity on the buses. (''Report to Congress, School Bus Safety: Crashworthiness Research, April 2002,'' *http://www-nrd.nhtsa.dot.gov/departments/nrd-11/SchoolBus/SBReportFINAL.pdf.)*

V. Federal Guidance on Belts on Large Buses

This document provides guidance to state and local jurisdictions on the subject of installing seat belts on large school buses and asks for comments on the agency's consideration of ''best practices'' concerning the belts on the large buses.

This guidance is provided in response to the information that the agency received at its July 11, 2007 public meeting in Washington, DC on seat belts on school buses (notice of public meeting, 72 FR 30739, June 4, 2007, Docket 28103).[4] In this meeting, NHTSA brought together a roundtable of State and local government policymakers, school bus and seat manufacturers, pupil transportation associations, and consumer groups to address: State and local policy perspectives regarding whether to require seat belts on school buses; information on the type of seat belt system designs that are currently being offered on large school buses; the economic impact that implementation of seat belt requirements for school buses (including purchase and maintenance of belts) have on States and local school districts; and the experience of schools and States in training and educating children, parents and drivers to use seat belts on large school buses.[5] At the meeting, participants requested that NHTSA provide up-to-date Federal guidance on whether seat belts should be provided on school buses, and whether lap belts should or should not be installed.

The agency has considered all of the comments made at the meeting. NHTSA found the following views particularly helpful:

• Mr. Charles Hood of the Florida Department of Education related the State of Florida's experience with lap belts on school buses. Informally, Mr. Hood estimated that the lap belt usage rate in Florida was about 70 percent for elementary school students, 35 percent for middle school students, and 25 percent for high school students. Mr. Hood reported that vandalism and maintenance of the seat belts were not major concerns. Mr. Hood estimated that the annual charge to equip all of Florida's 1399 school buses with lap/shoulder belts would be about $14 million.

• Mr. Hood believed that the key point of the debate is whether the three point belts will: Improve overall safety through the crash protection improvements that they provide, or reduce overall safety by potentially reducing the number of children who ride in school buses. Mr. Hood stated that States that require lap belts need Federal guidance as to whether they may or should continue to specify lap belts in their school buses.

• Ms. Ann Roy Moore of the Huntsville, Alabama City Schools recommended that national agencies come up with some standards that could be used to address the issue of school bus safety generally and seat belt safety in particular.

• Mr. Ken Hedgecock of Thomas Built Buses stated that two-point belts are on 27 percent of the school buses Thomas Built manufactures, and three-point belts are on 2 percent the school buses that it manufactures. Mr. Hedgecock said that the greatest concern relating to seat belts pertains to capacity and cost issues of the three-point belt system. The reduction in capacity and incremental costs of the three-point

[4] NHTSA also received written comments to docket 28103. We will address all relevant issues raised in those comments in today's NPRM and in a final rule or other rulemaking document following today's NPRM.

[5] A transcript of the July 11, 2007 public meeting is available in docket 28103.

system may have the unintended consequence of transporting fewer children on the yellow school bus, thus negatively affecting the safety of our nation's children. Mr. Hedgecock recommended the following as it pertains to seat belts: Clarification is needed on the use of two-point belt systems versus three-point belt systems in school buses; clarification is needed on the designated seating position as it pertains to a seat with seat belts; and there is a need for clear performance standards for the integration of all systems: the school bus, the seat, and the belts.

• Mr. Steve Wallen of Safeguard, a division of Indiana Mills Manufacturing Inc. (IMMI), stated that its testing shows that compartmentalization does well in front and rear impact crashes, but not particularly well in rollovers. Mr. Wallen recommends the FMVSSs should be amended so as to allow for lap/shoulder belts while maintaining compartmentalization to protect unbelted occupants. Mr. Wallen suggested that the FMVSSs specify requirements such that a school bus seat can withstand a crash with a student wearing a seat belt and one behind not wearing a seat belt at the same time. Mr. Wallen noted that retrofitting school buses is substantially more expensive and difficult than installing seats in new buses.

• Ms. Robin Leeds of the National School Transportation Association (NSTA) stated that a Federal mandate is not appropriate because of the costs. NSTA believes States and local school districts are in a better position to determine the best use of their resources than the Federal government. In the NSTA's view, the only way any safety belt program can be successful is if it has the full commitment of the school administration and of parents to make them work. NSTA also recommended that NHTSA develop standards for voluntarily-installed lap/shoulder belt systems so that ''everybody knows what system to use when they do install those systems.''

a. NHTSA School Bus Research Results

Our guidance about seat belts on school buses also takes into account the agency's research findings assessing the efficacy of existing safety measures employed on school buses and possible improvements to school bus occupant protection.

The Transportation Equity Act for the 21st Century (TEA–21) directed NHTSA to study and assess school bus occupant safety and analyze options for improvement. In response, the agency developed a research program to determine the real-world effectiveness of FMVSS No. 222 requirements for school bus passenger crash protection, evaluate alternative passenger crash protection systems in controlled laboratory tests, and provide findings to support rulemaking activities to upgrade the passenger crash protection for school bus passengers.

The research program consisted of NHTSA first conducting a full-scale school bus crash test to determine a representative crash pulse. The crash test was conducted by frontally impacting a conventional style school bus (Type C) into a rigid barrier at 30 mph (48.3 km/h). The impact speed was chosen to ensure that sufficient energy would be imparted to the occupants in order to evaluate the protective capability of compartmentalization, plus provide a level at which other methods for occupant injury mitigation could be evaluated during sled testing. A 30 mph (48 km/h) impact into the rigid barrier is also equivalent to two vehicles of similar size impacting at a closing speed of approximately 60 mph (96 km/h), which was found to be prevalent in the crash database files.

In the crash test, we used Hybrid III 50th percentile adult male dummies (representing adult and large teenage occupants), 5th percentile adult female (representing an average 12-year-old (12YO) occupant), and a 6-year-old child dummy (representing an average 6-year-old (6YO) occupant). The dummies were seated so that they were as upright as possible and as rearmost on the seat cushion as possible. The agency evaluated the risk of head injury recorded by the dummies (Head Injury Criterion (HIC15)), as well as the risk of chest (chest G's) and neck injury (Nij),[6] as specified in FMVSS No. 208 ''Occupant crash protection.''

NHTSA then ran frontal crash test simulations at the agency's Vehicle Research and Test Center (VRTC), using a test sled to evaluate passenger protection systems. Twenty-five sled tests using 96 test dummies of various sizes utilizing different restraint strategies were conducted that replicated the acceleration time history of the school bus full-scale frontal impact test. The goal of the laboratory tests was to analyze the dummy injury measures to gain a better understanding of the effectiveness of the occupant crash protection countermeasures. In addition to injury measures, dummy kinematics and interaction with restraints (i.e., seat backs and seat belts, as well as each other) were also analyzed to provide a fuller picture of the important factors contributing to the type, mechanism, and potential severity of any resulting injury.

NHTSA studied three different restraint strategies: (a) compartmentalization; (b) lap belt (with compartmentalization); and, (c) fore/aft loading.[7]

Within the context of these restraint strategies, various boundary conditions were evaluated: (a) Seat spacing—483 mm (19 inches), 559 mm (22 inches) and 610 mm (24 inches); (b) seat back height—nominally 508 mm (20 inches) and 610 mm (24 inches); and, (c) fore/aft seat occupant loading. Ten dummies were tested with misused or out-of-position (OOP) lap or shoulder restraints. The restraints were misused by placing the lap belt too high up on the waist, placing the lap/shoulder belt placed behind the dummy's back, or placing the lap/shoulder belt under the dummy's arm.

The agency found the following with regard to compartmentalization:

• Low head injury values were observed for all dummy sizes, except when override[8] occurred.

• High head injury values or dummy-to-dummy contacts beyond the biofidelic range of the test dummy were produced when the large male dummy overrode the seat in front of it, while the high-back seats prevented this.

• Low chest injury values were observed for all dummy sizes.

• Based on dummy motion and interaction with each other, compartmentalization was sensitive to seat back height for the 50th percentile male dummy.

• Compartmentalization of 6YO and 5th percentile female dummies did not

[6] HIC15, Chest G, and Nij values are used to predict injury risk in frontal crashes. HIC15 is a measure of the risk of head injury, Chest G is a measure of chest injury risk, and Nij is a measure of neck injury risk. The reference values for these measurements are the thresholds for compliance used to assess new motor vehicles with regard to frontal occupant protection during crash tests, FMVSS No. 208. For HIC15, a score of 700 is equivalent to a 30 percent risk of a serious head injury (skull fracture and concussion onset). In a similar fashion, Chest G of 60 equates to a 20 percent risk of a serious chest injury and Nij of 1 equates to a 22 percent risk of a serious neck injury. For all these measurements, higher scores indicate a higher likelihood of risk. For example, a Nij of 2 equates to a 67 percent risk of serious neck injury while a Nij of 4 equates to a 99 percent risk. More information regarding these injury measures can be found at NHTSA's Web site (*http://www-nrd.nhtsa.dot.gov/pdf/nrd-11/airbags/rev_criteria.pdf*).

[7] Unbelted occupants in the aft seat will affect the kinematics of belted occupants in the fore seat due to seat back deformation. Similarly, belted occupant loading of the fore seat back thru the torso belt will affect the compartmentalization for unbelted occupants in the aft seat.

[8] Override means an occupant's head or torso translates forward beyond the forward seat back providing compartmentalization.

appear to be sensitive to rear loading conditions.

• Compartmentalization of the 50th percentile male dummy did not appear to be sensitive to seat spacing for the 50th percentile male dummy.

The agency found the following with regard to lap belts on large school buses:

• Head and chest injury values were low for all dummy sizes.

• The average neck injury value was above the injury assessment reference value (IARV) for all test dummies, and was 70 percent above for the 5th percentile female dummy.

• Neck injury values increased for the 5th percentile female dummy when the seat spacing was increased from 483 mm (19 inches) to 559 mm (22 inches).

The agency found the following with regard to properly worn lap/shoulder belts on school buses:

• Head, chest and neck injury values were low for all size dummies and below those seen in the compartmentalization and lap belt results.

• Average head injury values were, at most, about half those seen in the compartmentalization and lap belt results.

• Neck injury values increased with application of rear loading for the 6YO and 5th percentile female dummies.

• Lap/shoulder belt systems would require approximately 15 inches seat width per passenger seating position. The standard school bus bench seat is 39 inches wide, and is considered a three-passenger seat. If the width of the seat bench were increased to 45 inches for both seats on the left and right side of the school bus, the aisle width would be reduced to an unacceptable level.

NHTSA found that, for improperly worn lap/shoulder belts:

• Placing the shoulder belt behind the dummy's back resulted in dummy motion and average dummy injury values similar to lap belt restraint.

• Placing the shoulder belt under the dummy's arm provided more restraint on dummy torso motions than when the belt is placed behind the back. Average dummy injury values for the 6YO were about the same as seen with lap/shoulder belts and 5th percentile female dummy injury values were between those seen in lap/shoulder belts and lap belts.

b. Agency Recommended Best Practices

School buses are one of the safest forms of transportation in the U.S. Every year, approximately 474,000 public school buses, transporting 25.1 million children to and from school and school-related activities,[9] travel an estimated 4.8 billion route miles.[10] Over the 11 years ending in 2005, there was an annual average of 26 school transportation related fatalities (11 school bus occupants (including drivers and passengers) and 15 pedestrians).[11] The bus occupant fatalities were comprised of six school-age children, with the remaining being adult drivers and passengers.[12] On average, there were 9 crashes per year in which an occupant was killed. The school bus occupant fatality rate of 0.23 fatalities per 100 million vehicle miles traveled (VMT) is more than six times lower than the overall rate for motor vehicles of 1.5 per 100 million VMT.[13]

The agency's school bus research results indicated that lap/shoulder belts could enhance the safety of large school buses, such that a child who has a seat on the school bus and who is belted with a lap/shoulder belt on the bus would have an even lower risk of head and neck injury than on current large school buses.[14] Thus, if ample funds were available for pupil transportation, and pupil transportation providers could order and purchase a sufficient number of school buses needed to provide school bus transportation to all children, we would recommend that pupil transportation providers consider installing lap/shoulder belts on large school buses because of the enhancements that lap/shoulder belts could make to school buses. Realistically, however, we recognize that funds provided for pupil transportation are limited, and that the monies spent on lap/shoulder belts on large school buses would usually draw from the monies spent on other crucial aspects of school transportation, such as purchasing new school buses to ensure that as many children as possible are provided school bus transportation, on driver and pupil training on safe transportation practices, and on upkeep and maintenance of school buses and school bus equipment. Bearing these considerations in mind, we recommend that pupil transportation providers consider lap/shoulder belts on large school buses *only if* there would be no reduction in the number of children that are transported to or from school or related events on large school buses. Reducing bus ridership would likely result in more student fatalities, since walking and private vehicles are less safe than riding a large school bus without seat belts.

Our best practices recommendation seeks to reflect real world considerations about the safety record of school buses, the economic impact on school systems incurred by the costs of seat belts and the impact that lap/shoulder belts have on the seating capacity of large school buses. Our laboratory test results indicate that our test dummies measured better head protection performance when lap/shoulder belts were properly used with compartmentalization than compared to compartmentalization alone. However, best practices compel us to acknowledge that installation of lap/shoulder belts, as currently designed, reduce the number of seats offered to students, resulting in fewer children riding school buses, exposing more children to higher safety risks in alternative forms of transport to or from school or related events, and a probable overall net safety disbenefit due to their installation.

Best practices compel us to encourage pupil transportation providers to make a comprehensive analysis of their needs and determine how lap/shoulder belts on large school buses accord with those needs. The best practices approach we have developed allows States the leeway to decide whether to require seat belts on large school buses, and whether lap only or lap/shoulder belts should be ordered. Given the tradeoff noted above, States should be permitted the flexibility of deciding whether to order large school buses with the seat belt safety enhancements after considering the excellent safety record of large school buses with compartmentalization, the benefits of allocating resources to belts as opposed to alternative safety measures, and the means available to ensure that the belts would be used. If a State were to determine that lap/shoulder belts are in its best interest, NHTSA encourages the State to install those systems. Today's document proposes performance requirements for the lap/shoulder belts, to ensure they will work well in a crash even if voluntarily installed.

[9] School Transportation News, Buyers Guide 2007.

[10] This value was reported by School Bus Fleet 2007 Fact Book.

[11] ''Traffic Safety Facts—School Transportation Related Crashes,'' NHTSA, DOT HS 810 626. The data in this publication account for all school transportation-related deaths in transporting students to and from school and school related activities. This includes non-school buses used for this purpose when these vehicles are involved in a fatal crash.

[12] For the crashes resulting in the 11 annual school bus occupant fatalities, 51 percent of the fatalities and 52 percent of the crashes were from frontal collisions. Traffic Safety Facts 2005, School Transportation-Related Crashes, DOT HS 810 626.

[13] Traffic Safety Facts 2005, DOT HS 810 631.

[14] The TEA–21 research program did not study whether belts could enhance the protection of compartmentalization in side crashes and rollovers. Most school bus fatalities occur in a crash involving a rollover, and the side crash fatalities are about as frequent as front crash fatalities.

Certain highway safety grant funds may continue to be used to fund the purchase and installation of seat belts (lap or lap/shoulder) on school buses. Annually, all States, the District of Columbia, Puerto Rico, the Bureau of Indian Affairs, and the U.S. territories receive NHTSA Section 402 State and Community Highway Safety Formula Grant Funds. A wide range of behavioral highway safety activities that help reduce crashes, deaths, and injuries, including seat belt-related activities, qualify as eligible costs under the Section 402 program. Each State determines how to allocate its funds based on its own priorities and identified highway safety problems as described in an annual Highway Safety Plan (HSP).

As with all proposed expenditures of Section 402 funds, the purchase and installation of seat belts on school buses must be identified as a need in the State's HSP and comply with all requirements under 23 U.S.C. Part 1200. Section 402 funds may not be used to purchase the school bus in its entirety, but may fund only the incremental portion of the bus cost directly related to the purchase and installation of seat belts.

We would advise States that are considering purchasing seat belts for school buses to be guided by the proposed standards in this notice of proposed rulemaking.

c. Guidance on Lap Belts on Large School Buses

In the July 11, 2007 public meeting, some participants asked for guidance on whether lap belts should be prohibited on large school buses. The question was asked in the aftermath of school bus research studies that found lap belts were associated with increased risk of injury on large school buses.[15]

After considering the data and other information on lap belts on large school buses, NHTSA does not believe there is a need to prohibit lap belts on the buses. In its 1999 report on bus crashworthiness, the NTSB concluded that the compartmentalization requirement for school buses in FMVSS No. 222 is incomplete in addressing school bus occupant protection in rollovers and lateral impacts from large vehicles, in that in such crashes, passengers do not always remain completely within the seating compartment. Although we have not found a safety need exists with respect to those non-frontal crashes to warrant requiring seat belts on large school buses,[16] we have always permitted States to choose to require the belts over and above the Federally required compartmentalization in the school buses they purchase.

We realize that laboratory research, including our own on lap belted dummies, shows relatively poor performance of lap belts in large school buses. However, this research involved severe frontal impacts. We cannot make a determination, based on the results of the limited testing with lap belt restraints in a severe frontal crash condition, that the addition of lap belts in large school buses reduces overall occupant protection. Lap belts are required in three States (New York (1987), New Jersey (1994), Florida (2001)), in many other school districts, and in special-needs equipped school buses. NHTSA has examined in depth New York State school bus crash data for lap belt equipped and non-belt equipped buses, and could not conclude that lap belts either helped or hurt occupant injury outcomes.

VI. Proposed Upgrades to Occupant Crash Protection

After considering the findings of NHTSA's school bus research program, we have decided to issue this NPRM to propose several sets of upgrades to the school bus safety requirements. The first set of upgrades involves improving the compartmentalized school bus interior on both small and large school buses. Seat back height would be increased from 20 inches to 24 inches to reduce the potential for passenger override in a crash, and school buses with seat bottom cushions that are designed to flip-up, typically for easy cleaning, would need a self-latching mechanism. The proposal to raise seat back height responds to findings from the agency's school bus research program, while the proposal for self-latching mechanisms responds to an NTSB recommendation to NHTSA (H–84–75).

The second set of upgrades involves specifics about the occupant protection requirements required for passengers of small school buses (school buses with a GVWR of 10,000 lb or less). In response to NHTSA's school bus research findings, this NPRM proposes to require small school buses to have lap/shoulder belts instead of just lap belts. The lap/shoulder belts would have to fit all passengers ages 6 through adult, and be equipped with retractors. The lap/shoulder belts would have to meet the existing anchorage strength requirements for lap/shoulder belts in FMVSS No. 210 and would be subject to new requirements for belt anchor location and torso belt adjustability. FMVSS No. 207 would also be amended to apply to passenger seats in small school buses. A newly-developed ''quasi-static'' test requirement (discussed in the next section of this preamble) would be adopted into FMVSS No. 222 to test school bus seats with lap/shoulder belts, to help ensure that seat backs incorporating lap/shoulder belts are strong enough to withstand the forward pull of the torso belts in a crash and the forces imposed on the seat from unbelted passengers to the rear of the belted occupants. These requirements would add to existing compartmentalization requirements for seat performance (e.g., seat performance forward, S5.1.3 of FMVSS No. 222, and seat performance rearward, S5.1.4). A minimum seat belt width of 15 inches would be specified for all school bus seats with lap/shoulder belts.

The third set of upgrades involves requirements for voluntarily-installed seat belts on large school buses. For large school buses with voluntarily-installed lap/shoulder belts, the vehicle would be subject to the requirements described above for lap/shoulder belts on small school buses, except FMVSS No. 207 would not apply to the passenger seats. The quasi-static test procedures for small school buses would slightly vary from those applying to seats on large school buses with voluntary lap/shoulder belts, to account for crash characteristic differences of large school buses versus small school buses. (Due to the mass and other characteristics of the vehicles, in crashes small school buses are subject to

[15] See the results of NHTSA's school bus research program (Report to Congress, School Bus Safety: Crashworthiness Research, *supra*). In addition, a 1985 study by Transport Canada provided data comparing the reaction of three belted and three unbelted 5th percentile adult female anthropomorphic test dummies in a 48 km/h (30 mph) frontal collision of a large school bus meeting compartmentalization requirements. The results indicated that the belted dummies experienced higher head accelerations, lower chest accelerations and more severe neck extension than did the unbelted ones. Accordingly, the study concluded that the use of a lap belt system in a school bus ''may result in more severe head and neck injuries for a belted occupant than an unbelted one, in a severe frontal collision.'' (School Bus Safety Study, January 1985). After analyzing the Transport Canada study, NHTSA could not conclude from the report's findings that belts degraded the benefits of compartmentalization to the extent that the supplemental restraint system rendered inoperative the safety of large school buses, but NHTSA acknowledged that the possibility exists that the occupant kinematics shown in the Canadian tests could occur. (Docket No. 85–14; Notice 02, RIN 2127–AB84, March 22, 1989).

[16] We reiterate our conclusion that the overall potential benefits of requiring lap belts on large school buses are insufficient to justify a Federal requirement for mandatory installation. NAS has also suggested that the funds used for required seat belts might be better used in other school bus safety programs. Special Report 222 (1989), *supra*.

higher severity forces than large school buses.)

For large school buses with voluntarily-installed lap belts, the vehicles would be required to meet FMVSS No. 210 requirements of a loading force of 22,240 N (5,000 pounds) per seating position. This would be consistent with the existing lap belt loading requirement for small school buses and light vehicles with lap belt only systems.

These proposed requirements are discussed below.[17] In addition, NHTSA has prepared a Technical Analysis that, among other things, presents a detailed analysis of data, engineering studies, and other information supporting these proposals.[18] A copy of this Technical Analysis will be placed in the docket.

a. Improving the Compartmentalized School Bus Interior of Both Small and Large School Buses

• *Seat back height.* At present, school bus seat back height is specified at S5.1.2 of FMVSS No. 222 to be at a minimum 508 millimeters (mm) (20 inches (in)). In this NPRM, we propose that the minimum seat back height for school bus seats be raised to 610 mm (24 in).

In NHTSA's school bus research program, when dummies representing older students were compartmentalized with current 20-inch high seat backs, the dummies were much more likely to override the seat and make head contact with test dummies that were placed in seats forward of the dummies. While the injury potential of these contacts was not quantifiable, dummies overriding seats means that the compartmentalization was not working. The highest HIC 15 value was registered when a 50th percentile male dummy behind a 20-inch seat back contacted the seat back two rows ahead. In cases where incidental contact did occur, the HIC 15 values tended to be very high. In two cases, the HIC 15 values were over 2,000 and the third was over 5,000. For the 24-inch seat backs, there was only dummy interaction between the rows of seats if both the forward and rearward dummies were 50th percentile male dummies. The high seat back seats effectively prevented the passengers from overriding the seat backs.

In the past, NHTSA has been informed that with the higher seat backs, drivers are not able to see and supervise the children. However, NHTSA is not aware of data showing that the higher seat backs result in supervision problems. NHTSA notes that four states (Illinois, New Jersey, New York, and Ohio) plus many other school districts require their school bus seats to have 24-inch seat backs. These states represent about 20 percent of all students in public transportation. We have received no reports of supervisory or safety related issues resulting from the higher seat backs from these jurisdictions. We request public comment on this issue.

• *Restraining barrier height.* We propose to amend S5.2.2, ''Barrier position and rear surface area,'' to specify that the rear surface area of the restraining barrier shall be such that in the front projected view, the restraining barrier's surface area above the horizontal plane that passes through the seating reference point, and below the horizontal plane 610 mm (24 inches) above the seating reference point, shall be not less than 90 percent of the seat bench width in millimeters multiplied by 610 (inches multiplied by 24). We are also proposing that restraining barriers have a minimum width of 75 percent of the seat bottom cushion at the upper portion of the restraining barrier. This is needed to ensure that the restraining barrier has sufficient width and area so that it sufficiently restrains passengers. Further, we seek to clarify that the restraining barrier's perimeter need not coincide with or lie outside of the perimeter of the seat back of the seat for which it is required if that seat back is higher than the minimum required by FMVSS No. 222. (Such a position would be consistent with an April 8, 1977 NHTSA interpretation letter to Wayne Corporation.)

• *Seat cushion latches.* At present, FMVSS No. 222 at S5.1.5 requires seat bottom cushions to withstand an upward force that is five times the weight of the seat bottom cushion. S5.1.5 specifies that, with all manual attachment devices between the seat and the seat cushion in the manufacturer's designated position for attachment, the seat cushion shall not separate from the seat at any attachment point when subjected to an upward force in Newtons of 5 times the mass of the seat cushion in kilograms and multiplied by 9.8 m/s^2, applied in any period of not less than 1 nor more than 5 seconds, and maintained for 5 seconds.

This text of S5.1.5 has remained unchanged since 1976. NHTSA notes that in order to allow the cushion to be removed or flipped up for maintenance, some seat cushions have been designed to attach to the rear seat frames with clips that swivel on and off the frame and with stationary clips that slip under the front frame member. Such cushion designs meet S5.1.5.

In 1984, the National Transportation Safety Board (NTSB) issued a recommendation to NHTSA (H–84–75) that seat cushions be attached with a fail-safe latching device to ensure that the cushions remain in their installed position during impacts and rollovers. This recommendation was closed based on a 1987 survey of NHTSA school bus manufacturers which indicated that the manufacturers would voluntarily implement the NTSB recommendation. Data indicate, however, that the school bus manufacturers did not voluntarily implement the NTSB recommendation.

NTSB believes there was a safety need for a requirement for a latching device because a 1987 NTSB study reported that seat cushions came loose in 16 of 44 school bus crashes. In four of the 16 crashes, all of the seat cushions came loose, and minor injuries were caused by the loose seat cushions in three of the 16 crashes. The NTSB concluded that seat cushions came free because clips were not secured to the seat frame or were loose and free to rotate. The 1987 report indicated the following safety concerns associated with loose cushions: Flying cushions can strike and injure occupants; occupants can fall through the opening left by the cushion; loose cushions may block exit routes; and loose cushions may hide injured occupants.

In the agency's school bus research program, seat cushions became detached in the frontal crash of a large school bus. To address the safety concerns raised by the NTSB, NHTSA is proposing to amend S5.1.5 to require latching devices for school bus seats that have latches that allow them to flip up or be removed for easy cleaning. We also propose a test procedure that would require the latch to activate after a 22 kg (48 lb) mass is placed on top of the seat at the seat cushion's center. The 48 lb weight is that of an average 6-year-old child. The test would ensure that any unlatched seat cushion would latch when a child occupant sits on the seat.

b. Additional Occupant Protection Requirements for Small School Buses (School Buses With a GVWR of 4,536 kg (10,000 lb) or Less)

• The agency proposes that small school buses be required to have lap/shoulder belts at all passenger seating positions. Since the FMVSSs were first promulgated, small school buses passenger seats have been required to have passenger lap belts (defined as Type 1 belts in FMVSS No. 209) as

[17] In Appendix A to this preamble, we list the FMVSSs affected by this NPRM and the proposed amendments to those standards.

[18] NHTSA Technical Analysis to Support Upgrading the Passenger Crash Protection in School Buses (September 2007).

specified in FMVSS No. 208, that meet the lap belt strength requirements specified in FMVSS No. 210. Lap belts were required because the ratio of the mass of a potential collision partner to that of a small school bus is larger than for a large school bus. Thus, for vehicle-to-vehicle collisions, the deceleration of a small school bus will be greater than for a large school bus. However, before today, we have never sought to require lap/shoulder belts for all passenger seats in small school buses.[19]

The primary reason for proposing lap/shoulder belts is the increased level of protection that children riding in a small school bus gain by having a lap/shoulder belt. Lap/shoulder belts provide an increased level of protection from lap belts by reducing the potential of head and neck injuries in frontal impacts. The relatively poor performance of lap belted dummies in NHTSA's frontal sled test research is of greater concern for small school buses. Frontal crashes will tend to be more severe for these smaller school buses than for large school buses. Properly worn lap/shoulder belts will reduce the potential negative effects of lap belts in severe frontal crashes while maintaining and potentially enhancing the protection offered in other crash modes. In NHTSA's 2002 Report to Congress, *School Bus Safety: Crashworthiness Research*, NHTSA noted that the results of the electronic data and video data showed that the dummies restrained with lap and shoulder belts had a lower risk of head and neck injuries than unbelted dummies.

Finally, while installation in large school buses could result in a 17 percent reduction in seating capacity, small school buses are already configured with seating positions that can accommodate lap/shoulder belts without a reduction in seating capacity.[20]

• *Adjustability of the belt system.* NHTSA proposes that requirements be added to FMVSS No. 210 that would ensure that the seat belt anchorages on school bus seats are designed so that the belt system will properly fit the range of children on a school bus: The average 6-year-old (represented by the Hybrid III 6-year-old child dummy (45 inches tall/52 pounds)); the average 12-year-old (represented by the Hybrid III 5th percentile female dummy (59 inches/108 pounds)) and; the large high school student (represented by the 50th percentile adult male dummy (69 inches/172 pounds)). Proper fit for children prevents injury and would ensure that the system performs properly in a crash. In addition, if the lap/shoulder seat belts did not fit the child occupant properly, there is an increased likelihood that the child would misuse the lap/shoulder belt system by placing the shoulder portion under the arm or behind the back. NHTSA's school bus research results showed that when the shoulder belt was placed behind the back, the restraint system functioned like a lap belt. Lap belts produced a higher risk of neck injury in the testing program.

In the agency's school bus research program, we saw examples of improper seat anchorage location. The first set of lap/shoulder belt seats supplied for testing in the school bus research program did not have the anchorages of the lap/shoulder belts located so that the seat belts would fit appropriately on any of the test dummies. The torso belt came across the dummies' heads and necks and the lap belt was high on the abdomen instead of on the hips. After consultation with the seat manufacturer, a second set of lap/shoulder belt equipped seats had seat belt anchorages such that the seat belts fit all of the test dummies (6-year-old to 50th percentile male) properly. The torso belt anchorage was higher on the seat back to allow for proper placement of the torso belt on taller people.[21] Also, as in the previously supplied seats, the shoulder belt had an adjustable anchorage that slides up and down a second shoulder belt so it could properly adjust for the sitting height of the typical 6-year-old through the adult size passenger.

NHTSA has tentatively determined that design requirements for the seat belt anchorages should be specified such that the belts would be sure to fit occupants ranging in size from the average 6-year-old child to the average adult male. The anchorage locations were determined by placing test dummies (6-year-old, 5th percentile female and 50th percentile male) into the school bus seats. The results are reported in NHTSA's Vehicle Research Test Center (VRTC) Test Report, *Test Methodology for Lap/Shoulder Belts in School Buses.* NHTSA has tentatively decided to apply the location requirements of FMVSS No. 210, S4.3.1. See Figure 1 of this preamble, below.

In addition, for the reasons discussed in the agency's technical report supporting this NPRM, we propose that school bus seats with lap/shoulder belts have a minimum shoulder belt adjustment range between 280 mm (11 inches) above the seating reference point and the school bus torso belt anchor point, to ensure that the shoulder belt will fit passengers ranging in size from a 6-year-old child to a 50th percentile adult male.

BILLING CODE 4910–59–P

[19] FMVSS No. 208 (S4.4.5) requires buses, other than school buses, with a GVWR of 10,000 lb or less manufactured on or after September 1, 2007 to have lap/shoulder belts (Type 2 belts) at all passenger seating positions other than side-facing positions. Today's NPRM would be consistent with that requirement for the non-school buses. (We note that the heading of S4.4.5 of FMVSS No. 208 should specify that the section does not apply to small school buses. See *http://dmses.dot.gov/docimages/pdf89/293807_web.pdf*, NHTSA letter February 19, 2004, explaining the typographical error. Today's NPRM would correct the typographical error in S4.4.5.)

[20] The typical seating configuration of small school buses is based on five rows of 762 mm (30 inches) two passenger seats. Therefore, the installation of lap/shoulder belts into each seating position should not result in a reduction in capacity.

[21] A torso belt anchorage located below the adult dummy's shoulder may increase the spinal compression loading in a crash, would increase the risk of the dummy sliding under the belt in a crash, and would increase the risk of spinal and abdominal injuries. The allowable location for the shoulder belt is specified in Figure 1 of the current FMVSS No. 210.

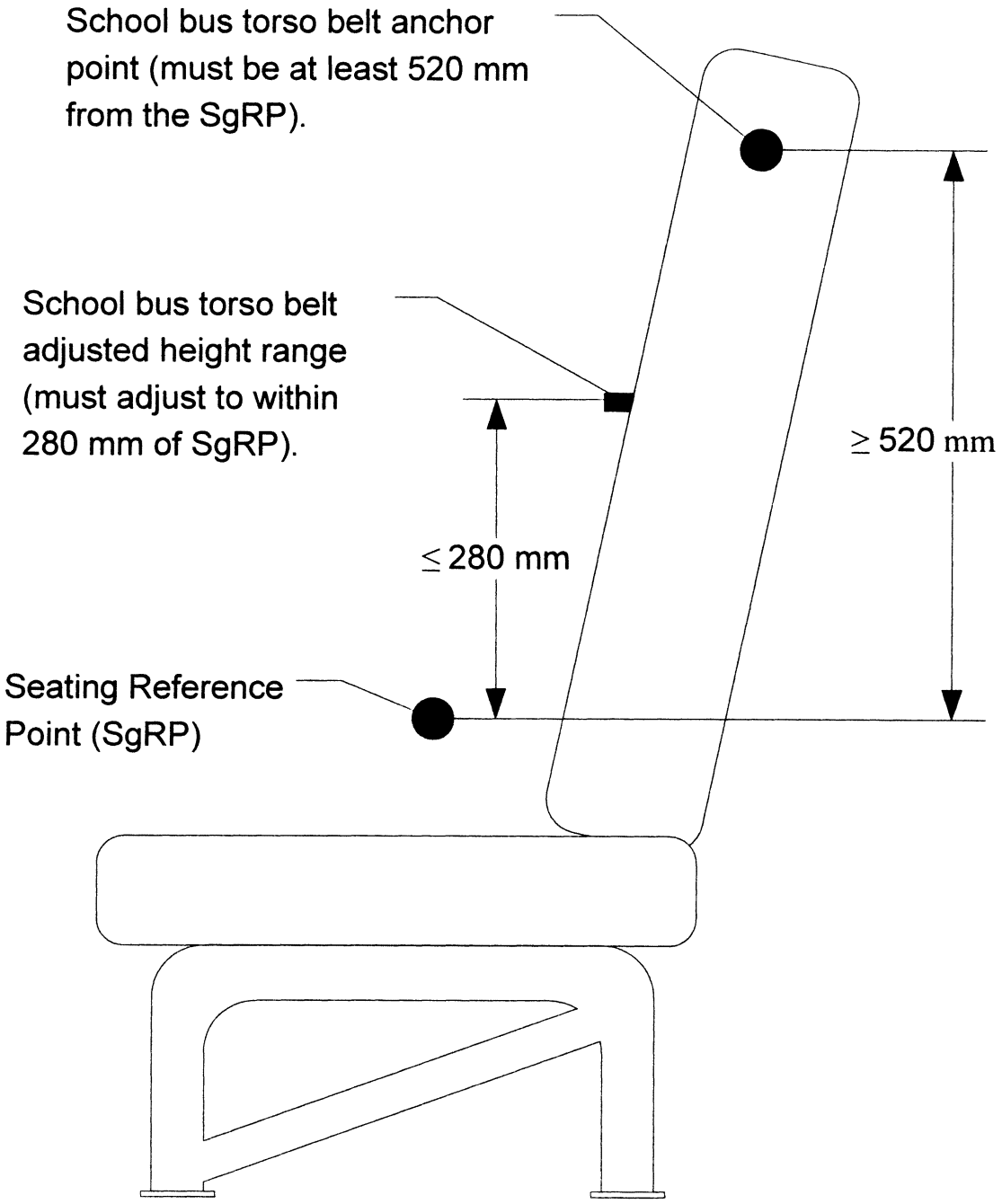

Figure 1 - Seat belt anchorage diagram.

BILLING CODE 4910–59–C

• The agency also proposes that the seat belt anchorages, both torso and lap, be required to be integrated into the seat structure. NHTSA proposes such integration because if we do not, we are concerned that some manufacturers could incorporate some seat belt anchorages into the bus floor, sidewall, or roof. Such installation into places other than the seat structure could potentially injure unbelted school bus passengers in a crash, or obstruct passengers during emergency egress. However, we seek comment on whether there are torso and lap belt anchorage designs available, other than integrated into the seat back, that would not impede access to emergency exits or become an injury hazard to unbelted passengers.

Improperly designed lap belts include those in which the buckle stalk is too long and the lap belt portion of the belt assembly rides high on the 6-year-old child's abdomen. For a proper fit, the lap belt portion must fit low across the hips so that the crash loads are distributed across the pelvis and not the abdominal area. Loading of the abdomen rather than the pelvis increases the risk of internal injuries caused by the seat belt penetration into the soft tissue of the abdomen.

We are aware that lap belts supplied to some states have a long buckle end

that causes the lap belt to not fit low across the hips of the passengers. The long buckle end also causes problems with securing child restraints.[22] However, our understanding is that long buckle ends have been provided out of a privacy concern about school bus personnel fastening lap belts near the crotch area of young passengers. Comments are requested on whether long buckle stalks should be retained on lap belts because of the privacy issues, even if the long buckle stalks may result in misplacement of the lap belt across the child's abdomen and difficulty in child restraint attachment.

• *Seat belt anchor strength for lap/shoulder belts.* Small school buses have been required to have lap belts since the issuance of FMVSS No. 222. The anchorages for these lap belts have had to be certified to FMVSS No. 210. Standard No. 210 specifies that for multiple seat belts anchored to the same seat, the belts are pulled simultaneously.

In today's proposal to require lap/shoulder belts in small school buses, we propose that small school buses should meet the existing small school bus anchorage strength requirements for lap/shoulder belts in FMVSS No. 210. Those existing strength requirements, specified in S4.2.2 for lap/shoulder belt anchorages, specify that the torso portion of the lap/shoulder belt be tested simultaneously with the lap belt portion at 13,344 N (3,000 pounds) each for each belt loop. For example, a three-position school bus seat is required to withstand an 80 kN (18,000 pound) test load. The calculation for the seat belt anchorage load requirement in a three passenger seat is (three times the shoulder belt plus three times the lap belt applied simultaneously) = $((3 \times 13{,}344\ N) + (3 \times 13{,}344\ N)) = 80{,}064\ N$ (18,000 pounds).

• *Seat belt retractors.* For school bus seat belts, there is at present no requirement for seat belt retractors. This is because the only seat belt systems currently installed in school buses are lap belts where retractors are not needed for the seat belt system to function properly. We propose to add a new section of regulatory text (S7.1.5 to FMVSS No. 208) to ensure that retractors are provided for school bus lap/shoulder seat belt assemblies, and that the retractors meet the same requirements as seat belt retractors for passenger cars, trucks and multipurpose passenger vehicles.

• *Maximum number of lap/shoulder seat belts and minimum seat width.* In S4.1 of FMVSS No. 222, NHTSA currently considers the number of seating positions on a bench seat to be the width of the bench seat in millimeters (W), divided by 381 and rounded to the nearest whole number. This W value is used to calculate the compartmentalization requirements for seat backs on all school buses and the number of lap belt only seating positions that must meet the provisions of FMVSS No. 208 and 210 for small school buses. The agency will continue to consider W to be the number of seating positions per bench seat with optional provided lap belts on large school buses as well as the compartmentalization requirements for all school buses, except that the divisor will be 380 rather than 381. (Using 380 instead of 381 would just be for simplicity.) However, for the seating positions on small school buses with required lap/shoulder belts and on large school buses with optional lap/shoulder belts, we are defining the number of seating positions (Y) in a slightly different way. Y is the total seat width in millimeters divided by 380, rounded down to the nearest whole number. Under the definitions of W and the proposed definition of Y, a 1,118 mm (44 inch) wide seat would have W = 3 seating positions for the purposes of calculating the magnitude of the compartmentalization requirements to apply to the seat back, but only Y = 2 seating positions for determining the lap/shoulder belts installed on the seat.[23] The result of this ''Y'' calculation would be that each passenger seating position in a school bus seat with a lap/shoulder belt would have a minimum seating width of 380 mm (15 inches). A proposed minimum seating position width of 15 inches for seats with lap/shoulder belts is needed because school buses are typically purchased based on maximum seating capacity, and we seek to ensure that manufacturers will not install lap/shoulder belt anchorages that are so narrowly spaced that they would only fit the smallest occupants.

• *FMVSS No. 207, Seating Systems.* At present, FMVSS No. 207 specifically excludes all bus passenger seats from its general performance requirements. FMVSS No. 207 tests the forward strength of the seat attachment to the vehicle by replicating the load that would be applied through the seat center of gravity by inertia in a 20 g vehicle deceleration. If seat belt anchors are attached to the seat, FMVSS No. 207 requires that the FMVSS No. 210 anchorage load be applied at the same time the FMVSS No. 207 inertial load is applied. Both loads are applied simultaneously because during a crash, the seat with an integrated seat belt (such as the seat in a school bus) will have to sustain the loading due to both the seat mass and the seat belt load from the restrained occupant.

The agency is proposing to apply FMVSS No. 207 to small school buses with lap/shoulder belts because the load imposed by FMVSS No. 207 appears to be greater than the load that would be imposed by FMVSS No. 222's seat performance requirements (S5.1.3). If we assume a seat mass of 35 kg (77 pounds),[24] the FMVSS No. 207 load would be 6,867 N (1,544 pounds). For a school bus seat with two seating positions, the FMVSS No. 210 load would be a total of 53,376 N (12,000 pounds). So if FMVSS No. 207 were applied it would add 12 percent $[((53{,}376\ N + 6{,}867\ N)/53{,}376\ N) - 1)]$ to the total load. This would result in a more stringent test procedure. Comments are requested on whether FMVSS No. 207 should be applied to small school bus passenger seats.

• A newly-developed ''quasi-static'' test requirement would apply to test school bus seats with lap/shoulder belts to ensure that the top of the seat back incorporating the seat belt anchorage does not pull too far forward due to the torso belt loading of the belted occupant and jeopardize the protection of unbelted passengers to the rear of the belted occupants. The quasi-static test is discussed in the next section. The quasi-static test requirements would be in addition to existing compartmentalization requirements for seat performance (e.g., seat performance forward, S5.1.3 of FMVSS No. 222, and seat performance rearward, S5.1.4), and would be in addition to the FMVSS No. 210 test for the seat belt anchorages, and would be in addition to the FMVSS No. 207 test. A new school bus seat (test specimen) would be used for each of these tests.

c. Additional Occupant Protection Requirements for Large School Buses With Voluntarily-Installed Lap/Shoulder Seat Belts

• Large school buses with voluntarily-installed lap/shoulder seat belts would be subject to the

[22] The short buckle length is recommended in NHTSA's pamphlet on the Proper Use of Child Safety Restraint Systems in School Buses. *http://www.nhtsa.dot.gov/people/injury/buses/busseatbelt/index.html.*

[23] ''Y'' would also be used to determine the loads to be applied to the shoulder belts for the quasi-static test, discussed below in this preamble. See also paragraphs S5.1.6.5.5(a) and (b) of the proposed regulatory text.

[24] A 991 mm (39 inch) wide C.E. White seat weights 34.5 kg (76 pounds). See *www.cewhite.com/cr-series-prod_info.html.*

requirements described above for lap/shoulder belts on small school buses, except FMVSS No. 207 would not apply to the passenger seats,[25] and as explained in the next section, the quasi-static test procedures for small school buses would slightly vary from those applying to seats on large school buses with voluntary lap/shoulder belts, to account for the relative severity of the anticipated frontal crash conditions for each school bus type.

The agency proposes that for large school buses with voluntarily installed lap/shoulder seat belts, the FMVSS No. 210 anchorage strength requirement should be identical to the requirements for passenger seat belt anchorages in smaller vehicles. We are not aware of any practicability concerns with meeting such anchorage strength requirements since the proposed level of performance for large school buses is already required of all other vehicles to which FMVSS No. 210 applies. For lap/shoulder belts, the torso and body blocks will be pulled at 13,334 N (3,000 pounds).

However, the agency recognizes that large school bus vehicles experience lower crash forces in the passenger compartment than do small school buses and other passenger motor vehicles. Part of the reason for the difference in crash deceleration is that the large bus body is designed to slide relative to the underlying frame as observed in the frontal barrier crash test. Specifically, the large school bus experienced about 12–13 g peak deceleration during a 48.3 km/h (30 mph) frontal crash into a rigid barrier, compared to about 25 g for a small school bus. In real world vehicle-to-vehicle crashes, large school buses will also experience lower crash forces than would a small school bus in a similar crash. This difference is due to the greater mass of the large bus and consequent lower change in crash forces.

During the development of this NPRM, NHTSA measured the dynamic loads to the seat belt anchorages on lap/shoulder belt-equipped two-passenger school bus seats from C.E. White Corporation and IMMI during crash simulation sled testing. The forces on the seat anchorages were measured using load cells attached to the sled buck and the attachment locations of the seat structure. The test was conducted using the 48.3 km/h (30 mph) school bus crash pulse that was used in the school bus research program. The seats had two 50th percentile adult male dummies restrained in lap/shoulder belts and two unbelted 50th percentile adult male dummies that struck the seat back.

The total loads for both seating positions transmitted from the lap/shoulder belts, through the seat structure and anchorages to the floor for each seat are shown in Figures 2 and 3 for the C.E. White and IMMI seats, respectively. The highest loads experienced by the C.E. White seats revealed that the force was approximately 17,500 N (3,934 pounds) per seating position.

[25] The agency does not believe there is a need to apply FMVSS No. 207 to large school buses that do not have seat belts because the load imposed by 207 appears to be lower than the load that would be imposed by FMVSS No. 222's seat performance requirements (S5.1.3). Under FMVSS No. 222, there are two forward forces applied to the seat back, by a lower bar and an upper bar. The lower bar force has a maximum value of 3,114 N (700 pounds) times the number of seating positions. In the seat performance (forward strength) test, after its initial application, the lower bar load is then reduced by half, and then the loading bar is locked in place. Following this, the upper loading bar is applied. The upper loading bar force must stay in a force deflection curve that has a minimum value of 4,448 N (1,000 pounds) and a maximum of 10,676 N (2,400 pounds) once the loading bar displaces more than 127 mm (5 inches). If we assume a load in the middle of the force/deflection range, the total forward force on the seat back is 7,562 N (1,700 pounds). In comparison, if we assume a seat mass of 35 kg (77 pounds), the FMVSS No. 207 inertial loading applied to this school bus seat would be 6,867 N (1,544 pounds). Thus, the FMVSS No. 222 forward seat strength loads for a large school bus are a reasonable substitute for the FMVSS No. 207 inertial loads. Likewise, the agency does not believe there is a need to apply FMVSS No. 207 to large school buses that do have seat belts. The agency is proposing FMVSS No. 210 seat belt anchorage loads for large school buses, and has found that the proposed loads are in excess of peak loads that were applied to the attachment of the seat to the sled test fixture in a 12 to 13 g sled test simulating a large school bus barrier crash. Thus, this load measurement captured the inertial loading of the seat. It can therefore be argued that for large school bus seats, the proposed FMVSS No. 210 anchorage loading would exceed loading that incorporates the seat inertial loading, albeit at a lower deceleration level than the 20 g value required by FMVSS No. 207.

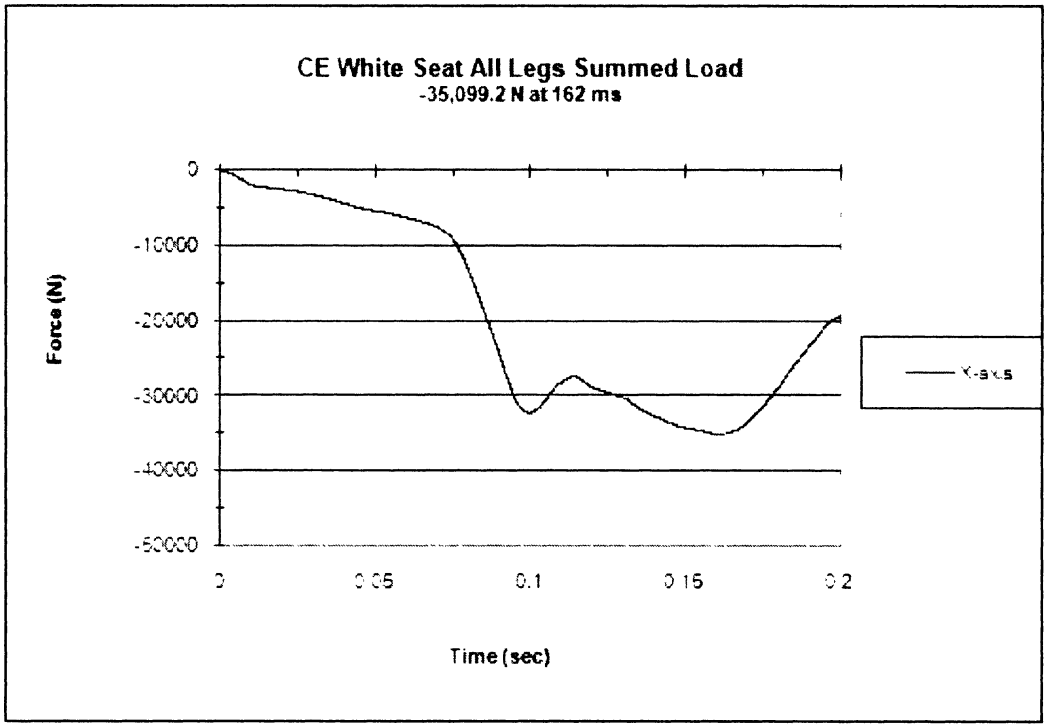

Figure 2. Force on C.E. White seat anchorages

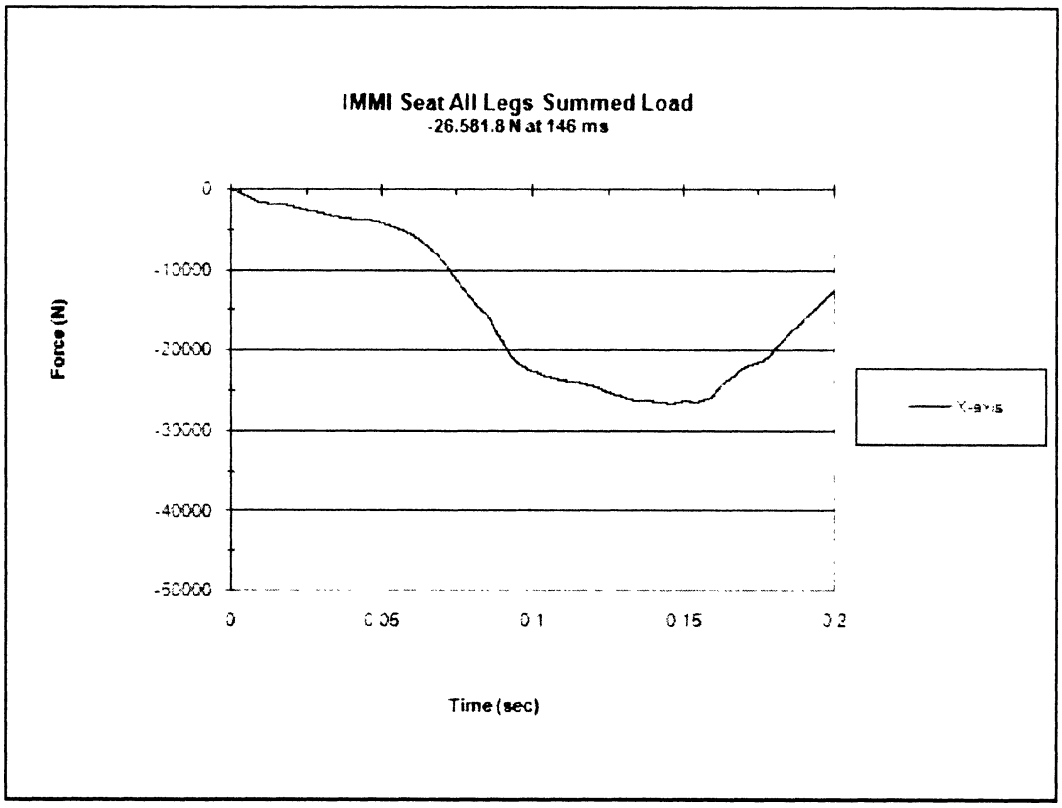

Figure 3. Force on IMMI seat anchorages

This testing suggested that the total peak dynamic loading sustained by the seat belts was about ⅔ of that applied in FMVSS No. 210. Notwithstanding the above data, the agency believes that the anchorage strength provided by FMVSS No. 210 provides the foundation for seat belt performance and there is value in maintaining consistency in this foundation. We understand that this higher factor of safety may result in seats and anchorages being constructed with heavier materials and may in turn increase the weight and cost of providing seat belts on large school buses. However, it is also possible that those putting seat belt anchorages on large school buses may use existing designs for small school buses that have always needed to meet the same strength level that is now being proposed for large school buses.

We request comment on the strength levels being proposed for large school buses in FMVSS No. 210. Would it be appropriate to reduce the strength level since the crash environment for large school buses will likely be less severe than for small school buses? How much could the load be reduced and still provide an appropriate safety margin in a variety of crash scenarios? What would be the cost and weight savings associated with a lesser requirement?

d. Additional Requirements for Large School Buses With Voluntarily-Installed Lap Belts

New large school buses with voluntarily-installed lap belts would be required to meet the requirements described in subsection (a) of this section of the preamble, and the requirements proposed in this paragraph. This NPRM proposes that seat belt anchorages would have to meet FMVSS No. 210 requirements of a loading force of 22,240 N (5,000 pounds) per seating position. This would be consistent with the existing lap belt loading requirement for small school buses and light vehicles with lap belt only systems.

VII. Quasi-Static Test for Lap/Shoulder Belts on Small and Large School Buses

The agency has developed a quasi-static test procedure for lap/shoulder belt-equipped seats in school buses and proposes to apply this test to small and large school buses equipped with lap/shoulder belts. The test is intended to address possible safety problems caused by having both belted and unbelted passengers on the same school bus. School bus seats designed to provide compartmentalized protection must contain the child between well-padded seat backs that provide controlled ride-down in a crash. A school bus seat with a lap/shoulder belt would have the torso (shoulder) belt attached to the seat back. In a crash involving a belted child and an unbelted child aft of the belted occupant, the seat back would be subject to consecutive force applications from the belted occupant's torso loading the seat back *and* the force generated by impact of the unbelted passenger. The quasi-static test replicates this double-loading scenario and specifies limits on how far forward the seat back may displace. The test helps ensure that the top of a seat back does not pull too far forward and jeopardize the protection of compartmentalized passengers to the rear of the belted occupants, or diminish the torso restraint effectiveness for lap/shoulder belted occupants.[26]

The agency developed the quasi-static test by performing a sled test using the same large school bus crash pulse that was used in the school bus research program. We measured the loads on the shoulder belts and both lower parts of the lap belt. Two unbelted 50th percentile male dummies were positioned behind the seat that contained two restrained 50th percentile male dummies. Visual observation of seat kinematics and load cell data produced by the shoulder belts from this test revealed the following sequence of events:

1. The knees of the unbelted dummy to the rear struck the back of the forward seat, causing some seat back deflection.
2. The shoulder belt was loaded by the restrained dummy in the forward seat.
3. The shoulder belt load was reduced as the seat back to which it was attached deflected forward.
4. The shoulder belt loads reduced to approximately zero when the unbelted dummies' chests struck the forward seat back.
5. The forward seat back deflected further forward as the energy from the unbelted dummies was absorbed.

This crash scenario is replicated in the quasi-static test. The load requirement for the quasi-static test is dependant upon the number of seating positions and also the likely seat capacity. A seat that has the minimal allowed overall seat width for either a two or three occupant seat will have a reduced loading requirement from other seats.[27] The agency is proposing that a 5,000 N (1,124 pounds) load per occupant be applied in the quasi-static test; however, seats with a minimal allowed overall seat width would have a 3,300 N (750 pounds) load per occupant applied.[28]

The reason for the reduced load requirement for the minimal width seats is that students at the 50th percentile male or larger size would not be able to simultaneously occupy each of the seating positions. For example, a 45 inch seat would have a seating capacity of three, or the minimum allowed overall seat width for a three occupant seat. However, a common practice used for the seating configuration in large school buses to be equipped with lap/shoulder belts has been to install a 1,143 mm (45 inches) three position seat on one side of the aisle and a 762 mm (30 inches) two position seat on the other side of the aisle in each row of the bus. To accommodate students larger than the 5th percentile female, schools typically seat two persons in the 1,143 mm (45 inches) seat and one person in the 762 mm (30 inches) seat. Because the seat width is not sufficient to accommodate the 50th percentile occupants at the full seating capacity (i.e., three in the 1,143 mm and two in the 762 mm seats), we are proposing that the quasi-static torso belt test have a reduced load.[29]

We believe that if the seat has the minimal allowed overall seat width it is reasonable to reduce the total torso belt loading applied to the seat in the quasi-static test to a per occupant value below the loading applied for larger seating width, since larger occupants would not occupy those seats to the full seating capacity. To estimate the appropriate load value, we assume the worst case loading condition is approached when

[26] A quasi-static test was developed and is being proposed instead of a dynamic test because school bus manufacturers are familiar with quasi-static testing. The existing requirements in FMVSS No. 222 use a quasi-static test (the current compartmentalization seat performance requirements in S5.1.3) to assess the capability of the school bus seat to provide protection in a frontal crash. The agency believes that by using a quasi-static procedure for testing school bus seats, manufacturers would be able to test a large number of seats and a variety of design configurations without incurring the delay and additional cost of sending each configuration to an outside testing facility.

[27] A school bus bench seat has the minimum allowed overall width if the total seat width in millimeters minus 380Y is 25 mm (1 inch) or less.

[28] Based on the assumption of a 5th percentile female occupant in a seating position as opposed to a 50th percentile male, we tentatively conclude that the proposed torso body block pull should be reduced in that situation to 3,300 N (750 pounds) from 5,000 N (1,124 pounds) or by approximately the same percentage as the ratio of the mass of a 5th percentile female to that of a 50th percentile male, i.e., 65 percent [48 kg/74 kg].

[29] We note that the total loading applied for a 45 inch seat under this proposal would be 9,900 N (3,300 N × three 5th percentile occupants) as compared to 10,000 N if it were tested for two 50th percentile occupants. A 30 inch seat would have a total load of 6,600 N (3,300 N × two 5th percentile occupants) rather than 5,000 N total load if one 50th percentile occupant were seated in the seat.

every seating position is occupied by a child as large as a 5th percentile adult female.[30]

We also believe the proposed loading requirements are practicable. Testing at NHTSA's Vehicle Research Test Center revealed that existing lap/shoulder belt equipped seats could meet a torso body block pull of 3,300 N (750 pounds) per occupant.[31] NHTSA in-vehicle testing at MGA Research Corporation of three-position, 1,143 mm (45 inches) seats with lap/shoulder belts in a large school bus, also revealed that these seats would pass the quasi-static test.[32]

For small school buses, this NPRM proposes that a 7,500 N (1,686 pounds) load per occupant be applied in the quasi-static test; however, seats with a minimal allowed overall seat width would have a 5,000 N (1,124 pounds) load per occupant applied. As explained in NHTSA's ''Technical Analysis to Support Upgrading the Passenger Crash Protection in School Buses,'' the torso belt loads are higher than for large school buses because small school buses experience higher crash accelerations than large school buses.

a. Stage 1: Torso Belt Anchorage Displacement

This part of the quasi-static test replicates steps 1 and 2 of the crash scenario above. The proposed procedure uses the knee and top loading bars that are currently specified in S5.1.3 of FMVSS No. 222 (seat back strength), which replicate a passenger's knee and torso loading the forward seat back[33] and the FMVSS No. 210 upper torso body block.[34] The test procedure uses the bottom loading bar to replicate the knee loading by the unbelted rear passengers (based on W), then specifies a pull test on the shoulder belts at each seating position in the seat to replicate loading of the shoulder belt by the belted passengers (based on Y). Under the proposed test procedure, the large school bus shoulder belts would be pulled using the upper torso body block specified in Figure 3 of FMVSS No. 210 with a force of 5,000 N (1,124 pounds) at each seating position for large school buses, and a force of 7,500 N (1,686 pounds) for small school buses.[35] The proposed rule (S5.1.6.5.4) includes a very specific procedure for positioning the torso body block. The torso body block force would be applied in not less than 5 and not more than 30 seconds. We found that an applied load of 5,000 N (1,124 pounds) for large school buses was necessary to replicate the torso belt loading from the sled test and to get the similar seat response observed from high speed video. This is slightly higher than twice the highest reading of the shoulder belt load cell (2,161 N). For small school buses, a higher force is proposed because the small school bus crash pulse has twice the peak acceleration of the large school bus, i.e., approximately 25 g.[36]

At this mid-point of the quasi-static test when the torso block force is being applied, NHTSA would measure displacement of the torso belt anchorages. The criterion for passing this part of the test is that the torso belt anchorages must not displace forward more than a specified value. The value is a function of the vertical location of the anchorage and the angle of the seat back surface that compartmentalizes the occupants rearward of the seat being tested, i.e., the posterior surface of the seat back.

Basically, for large school buses, the allowable displacement is equivalent to the amount of displacement that would result from the seat back deflecting forward 10 degrees past a vertical plane.[37] For large school buses, we propose that θ (theta) in the equation below be limited to 10 degrees as shown in Figure 9 of the proposed regulatory text. Thus, the total allowable forward horizontal displacement for large school buses would be:

Large School Bus Displacement Limit = $(AH + 100)(\tan\theta + 0.174/\cos\theta)$ mm.

For small school buses, the displacement limit would be equivalent to the amount of displacement resulting from a seat back deflecting forward 15 degrees past a vertical plane. The displacement limit would be determined using the equation:

Small School Bus Displacement Limit = $(AH + 100)(\tan\theta + 0.259/\cos\theta)$ mm.

The allowed displacement for small school buses is greater than the limit for large school buses to account for our concerns about practicability of small school buses meeting the displacement criterion.

As noted above, the goal of the torso belt anchorage displacement criterion is two-fold. The first goal is to assure that the seat back to which the torso belt is anchored has sufficient strength to restrain and protect the belted occupant in a frontal crash. The second goal is to assure that the seat back is still in a sufficiently upright position to compartmentalize unbelted occupants to the rear. Thus, we believe that the displacement limit should be narrow, to ensure that seat backs deviate as little as possible from the initial upright position.

b. Stage 2: Energy Absorption Capability of the Seat Back

The quasi-static test continues with procedures to replicate steps 3, 4 and 5 of the crash scenario above. After the torso anchorage displacement is measured, the torso body block load is released. Immediately after this load is released, forward load is applied to the seat back through the top loading bar. The seat back must be able to absorb the same amount of energy per seating position (452 joules (4,000 in-pounds)) as is required of a seat back under the compartmentalization requirement. However, for this quasi-static test, the seat back need not perform such that the top loading bar force must stay in the force/deflection corridor specified for the compartmentalization requirement.[38] This is because the torso body block load may have generated stresses in the seat frame that exceed the

[30] Of course, the seat could be used by occupants of other sizes and in other combinations. For example, two 50th percentile male occupants might occupy the outboard seating positions in a three position, 1,143 mm (45 inch) seat or a 50th percentile male and a smaller child might occupy a two seating position, 762 mm (30 inch) seat. However, we believe the loading applied by other occupant combinations will not result in drastically higher loading applied to the seat through the seat belts.

[31] VRTC testing determined that the 1,143 mm (45 inch), three position seat and a 762 mm (30 inch), two position seat would collapse during the quasi-static test when a torso body block load of 5,000 N (1,124 pounds) at each seating position was used.

[32] Research Testing For FMVSS No. 222, School Bus Passenger Seating and Crash Protection, Report No. 222R–MGA–2007–001, September 2006, MGA Research Corporation.

[33] The current knee loading test procedure requires that initially a force of 3,114 N (700 pounds) times the number of seating positions in the test seat (w) be applied to the seat back within 5 and not more than 30 seconds, and then the force is reduced to 1,557 N (350 pounds) times w. The knee loading bar is locked in this position for the remainder of the test. The current top loading test procedure requires an additional force through the top loading bar until 452 joules (4,000 inch-pounds) times w of energy is absorbed by the seat back.

[34] The agency is considering a rulemaking that would replace the torso body block in FMVSS No. 210 with an updated force application device. If the upper torso body block in FMVSS No. 210 is changed, the body block discussed in this quasi-static procedure proposed today may be changed to the new force application device as well.

[35] As discussed earlier in this section, these 5,000 N (1,124 pounds) and 7,500 N (1,686 pounds) values would be reduced depending on the width of the seat.

[36] The rational for the load application is explained in the agency's Technical Analysis.

[37] The derivation of the equation defining this displacement limit is explained in the agency's Technical Analysis.

[38] A separate FMVSS No. 222 forward loading test is still performed on a different test specimen, one that was not subjected to the quasi-static test, to assure that in a crash, if the seat were not occupied by a belted passenger and it were impacted by an unbelted rearward passenger, the seat would meet the force/deflection corridor.

elastic limit of the material and result in residual strain. The seat back would still need to have the capability to absorb 452 joules of energy from the unbelted rear occupant, but the manner of absorbing the energy would not be as controlled as when impacting a seat back that had not been subjected to the previous loading from the seat belts.

c. Request for Comments

- We note that in the above quasi-static procedure, no load is applied through the pelvis body block. This is because a visual assessment showed the desired seat response could be achieved with just the torso body block load. Also, a main focus of the test is to assure that the top of the seat back does not pull too far forward and jeopardize the protection of compartmentalized passengers to the rear of the belted occupants. The agency seeks comment on whether the quasi-static test should apply a pelvis block loading.
- The agency also seeks comment on the proposal to have a more rigorous quasi-static seat test for small school buses than for large school buses. We also seek comment on the appropriate level of the torso block loading to be applied during the test and allowable anchorage displacement. Would it be appropriate and reasonable to impose the same displacement limit as is being proposed for large school buses?
- Comments are requested on the validity of the assumption that the timing of the seat loading is such that the seat belt loading will essentially be finished before the upper part of the seat back is loaded by the rear compartmentalized dummy.
- The agency also seeks comment on the proposed procedure (see S5.1.6.5.4 of the proposed rule) for positioning the torso block. Is the proposed procedure sufficiently clear? Are there ways to improve the clarity of the test procedure?

VIII. Lead Time

If the proposed changes in this NPRM are made final, NHTSA proposes a one year lead time for school bus manufacturers to meet the new minimum seat back height (24 inches), seat cushion test and barrier requirements for all school buses, since there is limited or no development necessary for these changes.

We note that lap/shoulder belts are currently available from two suppliers. We are aware of at least one school bus manufacturer (Collins) that is already manufacturing its own lap/shoulder belt seats. We further propose a one year lead time for meeting requirements for voluntarily installed seat belts in large school buses and a three year lead time for meeting mandatory installation in small school buses. We believe three years are necessary for small school buses since some design, testing, and development will be necessary to certify compliance to the new requirements. Nothing in this NPRM proposes to require that large school buses be fitted with seat belt anchorages, with lap belts, or lap/shoulder belts.

If the proposed changes in this NPRM are made final, NHTSA proposes that optional early compliance be permitted.

IX. Rulemaking Analyses and Notices

Executive Order 12866 and DOT Regulatory Policies and Procedures

This rulemaking document was not reviewed by the Office of Management and Budget under E.O. 12866 and is not considered to be significant under E.O. 12866 or the Department's Regulatory Policies and Procedures (44 FR 11034; February 26, 1979). NHTSA has prepared a preliminary regulatory evaluation (PRE) for this NPRM.[39]

This NPRM proposes: (a) For all school buses, to increase seat back height from 20 inches to 24 inches, and to require a self-latching mechanism for seat bottom cushions that are designed to flip-up [40]; and (b) for small school buses (GVWR of 4,536 kg (10,000 lb) or less, require lap/shoulder belts instead of just lap belts. The belt systems would be required to meet specifications for retractors, strength, location and adjustability. Seat backs with lap/shoulder belts would be subject to a quasi-static test so that the seat backs are strong enough to withstand the forces from a belted passenger and force imposed on the seat from unbelted passenger seated behind rear the belted occupant. This NPRM also proposes: (c) Performance requirements for voluntarily-installed seat belts on large (over 4,536 kg (10,000 lb)) school buses. For large school buses with voluntarily-installed lap/shoulder belts, the vehicle would be subject to the requirements described above for lap/shoulder belts on small school buses, except that applied test forces and performance limits would be adjusted so as to be representative of those imposed on large school buses. Large school buses with voluntarily-installed lap belts would be required to meet anchorage strength requirements. This NPRM does not require seat belts to be installed on large school buses. The proposed performance requirements for seat belts on large school buses affect large school buses only if purchasers choose to order seat belts on their vehicles.

School Bus Fleet 2007 Fact Book on U.S. school bus sales for the sales years 2001–2005 reports that for each of these years on average, approximately 40,000 school buses were sold. NHTSA estimates that of the 40,000 school buses sold per year, 2,500 of them were 10,000 pounds GVWR or under. The other 37,500 school buses were over 10,000 pounds GVWR. Four states currently require high back seats (Illinois, New Jersey, New York, and Ohio). These states have 21.7 percent of the sales. Thus, the high back seat incremental costs apply to 78.3 percent of these sales or 1,958 buses that are 10,000 pounds GVWR or under and 29,362 buses that are over 10,000 pounds GVWR.

Small School Buses

NHTSA estimates that the costs of this rulemaking would be the incremental cost of the higher (24 inch) seat back ($45 to $64 per small school bus for 78.3 percent of the fleet) plus the incremental cost for lap/shoulder belts over lap belts of $1,121 to $2,417. This would be a total incremental cost per school bus of $1,166 to $2,481 per bus for those states without high back seats. If it is assumed that in a given year, 2,500 small school buses are sold, for all small school buses, the total incremental costs of this rulemaking are estimated to be from $2,889,000 ($45 × 1,958 + $1,121 × 2,500 small school buses) to $6,167,000 ($64 × 1,958 + $2,417 × 2,500 small school buses).

The estimated benefits resulting from the higher seat backs and lap/shoulder belts on small school buses is, per year, 37.2 fewer injuries, and 0.4 fewer fatalities.

Large School Buses

Costs of Higher Seat Backs on Large School Buses—If this NPRM were made final, all large school buses would be required to have the higher seat backs of 24 inches. NHTSA estimates the cost per large school bus of the higher seat back to be $125. If this NPRM were made final, NHTSA estimates that the total costs of the higher seat backs on large school buses to be $3,680,000 (29,362 large school buses times $125.40).

[39] NHTSA's preliminary regulatory evaluation (PRE) discusses issues relating to the potential costs, benefits and other impacts of this regulatory action. The PRE is available in the docket for this NPRM and may be obtained by contacting Docket Management at the address or telephone number provided at the beginning of this document.

[40] The agency estimates that a self-latching mechanism on flip-up seat bottoms would cost less than $3 per seat, or $66 per bus. This cost was not included in the estimates given below. Comments are requested on the number of school buses and school bus seats affected by the seat latching requirement.

Benefits of Higher Seat Backs on Large School Buses—If this NPRM were made final, the benefits from higher seat backs on large should buses is estimated to be 29.6 fewer injuries per year, and 0.2 fewer fatalities per year.

Costs and Benefits of Performance Requirements for Voluntarily-Installed Belts on Large School Buses—As earlier noted, nothing in this rulemaking would require any party to install lap or lap/shoulder belts at passenger seating positions in large school buses. Instead, this rulemaking would specify performance requirements that voluntarily-installed lap or lap/shoulder belts at passenger seating positions must meet. Lap or lap/shoulder belts that are now installed in large school buses would be affected by this rulemaking, in that the voluntarily-installed belt systems would be subject to the performance requirements set forth in this NPRM whereas currently the systems are not subject to any Federal standard. The agency is unable to estimate the costs and benefits of this part because not enough is known about the requirements that state and local authorities now specify for the performance of seat belt systems on large school buses. Comments are requested on the added costs that would result from the belt systems having to meet the performance requirements specified in this NPRM.

Overview of Costs and Benefits

Costs of High Back Seats and Lap/Shoulder Belts for Small School Buses, and of High Back Seats for Large School Buses

Small School Buses: Adding together the high back seat incremental cost of $45 to $64 to the incremental cost for lap/shoulder belts over lap belts of $1,121 to $2,417, results in a total incremental cost of $1,166 to $2,481 per bus.

Large School Buses: The incremental cost for high back seat is estimated to be $125 per bus.

TABLE 1.—TOTAL COSTS (PER BUS AND FOR THE FLEET)

[$2006]

	Large buses	Small buses	Small buses
	66 passenger	14 Passenger	20 Passenger.
Per Bus Costs	$125	$1,166	$2,481.
Annual Fleet Costs	$3.7 million	$2.9 million	$6.2 million.
Combined Annual Fleet Costs	$6.6 to $9.9 Million.		

Benefits of High Back Seats and Lap/Shoulder Belts for Small School Buses, and of High Back Seats for Large School Buses

The benefits of the proposal for small school buses and large school buses are estimated as shown below in Table 2:

TABLE 2.—TOTAL BENEFITS

	Small school bus		Large school bus		Total	
	Injuries	Fatalities	Injuries	Fatalities	Injuries	Fatalities
High Back Seat	Combined below[1]		30	0.2	30	0.2
Lap/Shoulder Belts	37	0.4	n.a.	n.a.	37	0.4
Total	37	0.4	30	0.2	67	0.6

[1] We did not have test data to allow us to separate out the high back seats from lap/shoulder belts for small school buses; thus, these data have been combined.

Regulatory Flexibility Act

Pursuant to the Regulatory Flexibility Act (5 U.S.C. 601 *et seq.*, as amended by the Small Business Regulatory Enforcement Fairness Act (SBREFA) of 1996), whenever an agency is required to publish a notice of rulemaking for any proposed or final rule, it must prepare and make available for public comment a regulatory flexibility analysis that describes the effect of the rule on small entities (i.e., small businesses, small organizations, and small governmental jurisdictions). The Small Business Administration's regulations at 13 CFR part 121 define a small business, in part, as a business entity ''which operates primarily within the United States.'' (13 CFR § 121.105(a)). No regulatory flexibility analysis is required if the head of an agency certifies that the rule will not have a significant economic impact on a substantial number of small entities. The SBREFA amended the Regulatory Flexibility Act to require Federal agencies to provide a statement of the factual basis for certifying that a rule will not have a significant economic impact on a substantial number of small entities.

NHTSA has considered the effects of this rulemaking action under the Regulatory Flexibility Act. According to 13 CFR Section 121.201, the Small Business Administration's size standards regulations used to define small business concerns, school bus manufacturers would fall under North American Industry Classification System (NAICS) No. 336111, *Automobile Manufacturing,* which has a size standard of 1,000 employees or fewer. Using the size standard of 1,000 employees or fewer, NHTSA estimates that there are two small school bus manufacturers in the United States (U.S. Bus Corp. and Van-Con). NHTSA believes that both U.S. Bus Corp and Van-Con manufacture small school buses and large school buses.

I hereby certify that if made final, this proposed rule would not have a significant economic impact on a substantial number of small entities. If this NPRM were made final, the small businesses manufacturing small buses would incur incremental costs ranging from a low of $1,166 to $2,481 per small school bus, out of a total cost of $40,000 to $50,000 per small school bus. The small businesses manufacturing large school buses would incur incremental costs of $125 per school bus (out of a total of more than $70,000) for the costs of the higher seat backs. The costs of lap/shoulder belts on large school buses is not a factor, as nothing in this NPRM would require lap/shoulder belts or lap belts at passenger seating positions in large school buses.

The relatively minimal additional costs outlined above for large and small school buses would be passed on to school bus purchasers. Those purchasers are required to be sold school buses if they purchase a new bus, and to use school buses. Thus, small school bus manufacturers would not lose market share if the changes proposed in this NPRM were made final. While small organizations and governmental jurisdictions procuring school buses would be affected by this rulemaking in that the cost of school buses would increase, the agency believes the impacts on these entities would not be significant.

Executive Order 13132

NHTSA has examined today's NPRM pursuant to Executive Order 13132 (64 FR 43255, August 10, 1999). On July 11, 2007, NHTSA held a public meeting bringing together a roundtable of state and local government policymakers, school bus manufacturers, pupil transportation associations and consumer groups to discuss the safety, policy and economic issues related to seat belts on school buses (see NHTSA Docket 28103). No additional consultation with States, local governments or their representatives is contemplated beyond the rulemaking process. Further, the agency has concluded that the rulemaking would not have federalism implications because it would not have ''substantial direct effects on the States, on the relationship between the national government and the States, or on the distribution of power and responsibilities among the various levels of government.'' This proposal would specify performance requirements for seat belts voluntarily installed on large school buses, but does not propose to require the belts on the large buses.

Further, no consultation is needed to discuss the preemptive effect of today's rulemaking. NHTSA rules can have preemptive effect in at least two ways. First, the National Traffic and Motor Vehicle Safety Act contains an express preemptive provision: ''When a motor vehicle safety standard is in effect under this chapter, a State or a political subdivision of a State may prescribe or continue in effect a standard applicable to the same aspect of performance of a motor vehicle or motor vehicle equipment only if the standard is identical to the standard prescribed under this chapter.'' 49 U.S.C. 30103(b)(1). It is this statutory command that preempts State law, not today's rulemaking, so consultation would be inappropriate.

In addition to the express preemption noted above, the Supreme Court has also recognized that State requirements imposed on motor vehicle manufacturers, including sanctions imposed by State tort law, can stand as an obstacle to the accomplishment and execution of a NHTSA safety standard. When such a conflict is discerned, the Supremacy Clause of the Constitution makes their State requirements unenforceable. See Geier v. American Honda Motor Co., 529 U.S. 861 (2000). NHTSA has not outlined such potential State requirements in today's rulemaking, however, in part because such conflicts can arise in varied contexts, but it is conceivable that such a conflict may become clear through subsequent experience with today's standard and test regime. NHTSA may opine on such conflicts in the future, if warranted. See id. at 883–86.

National Environmental Policy Act

NHTSA has analyzed this NPRM for the purposes of the National Environmental Policy Act. The agency has determined that implementation of this action would not have any significant impact on the quality of the human environment.

Paperwork Reduction Act

Under the procedures established by the Paperwork Reduction Act of 1995, a person is not required to respond to a collection of information by a Federal agency unless the collection displays a valid OMB control number. This NPRM would not establish any new information collection requirements.

National Technology Transfer and Advancement Act

Under the National Technology Transfer and Advancement Act of 1995 (NTTAA) (Public Law 104–113), ''all Federal agencies and departments shall use technical standards that are developed or adopted by voluntary consensus standards bodies, using such technical standards as a means to carry out policy objectives or activities determined by the agencies and departments.'' After carefully reviewing the available information, NHTSA has determined that there are no voluntary consensus standards relevant to this rulemaking.

Executive Order 12988

With respect to the review of the promulgation of a new regulation, section 3(b) of Executive Order 12988, ''Civil Justice Reform'' (61 FR 4729, February 7, 1996) requires that Executive agencies make every reasonable effort to ensure that the regulation: (1) Clearly specifies the preemptive effect; (2) clearly specifies the effect on existing Federal law or regulation; (3) provides a clear legal standard for affected conduct, while promoting simplification and burden reduction; (4) clearly specifies the retroactive effect, if any; (5) adequately defines key terms; and (7) addresses other important issues affecting clarity and general draftsmanship under any guidelines issued by the Attorney General. This document is consistent with that requirement. Pursuant to this Order, NHTSA notes as follows. The preemptive effect of this proposed rule is discussed above. NHTSA notes further that there is no requirement that individuals submit a petition for reconsideration or pursue other administrative proceeding before they may file suit in court.

Unfunded Mandates Reform Act

The Unfunded Mandates Reform Act of 1995 requires agencies to prepare a written assessment of the costs, benefits and other effects of proposed or final rules that include a Federal mandate likely to result in the expenditure by State, local or tribal governments, in the aggregate, or by the private sector, of more than $100 million annually (adjusted for inflation with base year of 1995). This NPRM would not result in expenditures by State, local or tribal governments, in the aggregate, or by the private sector in excess of $100 million annually.

Executive Order 13045

Executive Order 13045 (62 FR 19885, April 23, 1997) applies to any rule that: (1) is determined to be ''economically significant'' as defined under E.O. 12866, and (2) concerns an environmental, health, or safety risk that NHTSA has reason to believe may have a disproportionate effect on children.

This rulemaking is not subject to the Executive Order because it is not economically significant as defined in E.O. 12866.

Executive Order 13211

Executive Order 13211 (66 FR 28355, May 18, 2001) applies to any rulemaking that: (1) Is determined to be economically significant as defined under E.O. 12866, and is likely to have a significantly adverse effect on the supply of, distribution of, or use of energy; or (2) that is designated by the Administrator of the Office of Information and Regulatory Affairs as a significant energy action. This rulemaking is not subject to E.O. 13211.

Plain Language

Executive Order 12866 and the President's memorandum of June 1, 1998, require each agency to write all rules in plain language. Application of the principles of plain language includes consideration of the following questions:

- Have we organized the material to suit the public's needs?
- Are the requirements in the rule clearly stated?
- Does the rule contain technical language or jargon that isn't clear?
- Would a different format (grouping and order of sections, use of headings, paragraphing) make the rule easier to understand?
- Would more (but shorter) sections be better?
- Could we improve clarity by adding tables, lists, or diagrams?
- What else could we do to make the rule easier to understand?

If you have any responses to these questions, please include them in your comments on this proposal.

Regulation Identifier Number (RIN)

The Department of Transportation assigns a regulation identifier number (RIN) to each regulatory action listed in the Unified Agenda of Federal Regulations. The Regulatory Information Service Center publishes the Unified Agenda in April and October of each year. You may use the RIN contained in the heading at the beginning of this document to find this action in the Unified Agenda.

Privacy Act

Anyone is able to search the electronic form of all comments received into any of our dockets by the name of the individual submitting the comment (or signing the comment, if submitted on behalf of an association, business, labor union, etc.). You may review DOT's complete Privacy Act Statement in the **Federal Register** published on April 11, 2000 (Volume 65, Number 70; Pages 19477–78).

X. Public Participation

How do I prepare and submit comments?

Your comments must be written and in English. To ensure that your comments are correctly filed in the Docket, please include the docket number of this document in your comments.

Your comments must not be more than 15 pages long. (49 CFR 553.21). We established this limit to encourage you to write your primary comments in a concise fashion. However, you may attach necessary additional documents to your comments. There is no limit on the length of the attachments.

Please submit two copies of your comments, including the attachments, to Docket Management at the address given above under **ADDRESSES.**

Comments may also be submitted to the docket electronically by logging onto the Docket Management System website at *http://www.regulations.gov.* Follow the online instructions for submitting comments.

Please note that pursuant to the Data Quality Act, in order for substantive data to be relied upon and used by the agency, it must meet the information quality standards set forth in the OMB and DOT Data Quality Act guidelines. Accordingly, we encourage you to consult the guidelines in preparing your comments. OMB's guidelines may be accessed at *http://www.whitehouse.gov/omb/fedreg/reproducible.html.* DOT's guidelines may be accessed at MACROBUTTON HtmlResAnchor *http://dmses.dot.gov/submit/DataQualityGuidelines.pdf.*

How can I be sure that my comments were received?

If you wish Docket Management to notify you upon its receipt of your comments, enclose a self-addressed, stamped postcard in the envelope containing your comments. Upon receiving your comments, Docket Management will return the postcard by mail.

How do I submit confidential business information?

If you wish to submit any information under a claim of confidentiality, you should submit three copies of your complete submission, including the information you claim to be confidential business information, to the Chief Counsel, NHTSA, at the address given above under **FOR FURTHER INFORMATION CONTACT**. In addition, you should submit two copies, from which you have deleted the claimed confidential business information, to Docket Management at the address given above under **ADDRESSES.** When you send a comment containing information claimed to be confidential business information, you should include a cover letter setting forth the information specified in our confidential business information regulation. (49 CFR part 512.)

Will the agency consider late comments?

We will consider all comments that Docket Management receives before the close of business on the comment closing date indicated above under DATES. To the extent possible, we will also consider comments that Docket Management receives after that date. If Docket Management receives a comment too late for us to consider in developing a final rule (assuming that one is issued), we will consider that comment as an informal suggestion for future rulemaking action.

How can I read the comments submitted by other people?

You may read the comments received by Docket Management at the address given above under **ADDRESSES.** The hours of the Docket are indicated above in the same location. You may also see the comments on the Internet. To read the comments on the Internet, go to *http://www.regulations.gov.* Follow the online instructions for accessing the dockets.

Please note that even after the comment closing date, we will continue to file relevant information in the Docket as it becomes available. Further, some people may submit late comments. Accordingly, we recommend that you periodically check the Docket for new material.

Appendix A to the Preamble—Proposed Amendments to Federal Motor Vehicle Safety Standards

For the convenience of the reader and for illustration purposes, this appendix generally lists the proposed amendments according to the affected standard. This NPRM proposes to:

a. Amend 207, *Seating Systems,* to apply it to school buses with a GVWR of 4,536 kg (10,000 lb) or less (''small school buses'').

b. Amend FMVSS No. 208, *Occupant Crash Protection,* to:

1. Require lap/shoulder belt at all passenger-seating positions on small school buses.

2. Correct a typographical error in the heading of S4.4.5.

3. Specify lockability requirements for seat belts on school buses.

c. Amend FMVSS No. 210, *Seat Belt Assembly Anchorages,* to:

1. Specify a seat belt anchorage strength test of 3,000 pounds each for the torso and the lap portion of voluntarily-installed lap/shoulder belt anchorages for passengers in large school buses.

2. Specify a seat belt anchorage strength test of 5,000 pounds for voluntarily-installed lap belt anchorages in large school buses.

3. Add a requirement concerning lap/shoulder anchorage locations and adjustability so seat belts on school buses properly fit passengers from sizes ranging from an average 6-year-old through a 50th percentile adult male.

4. Add a requirement that the seat belts be anchored to the school bus seat structure.

d. Amend FMVSS No. 222, *School Bus Passenger Seating and Crash Protection,* to:

1. Increase seat back height from 20 inches to 24 inches above the seating reference point, and amend frontal restraining barrier requirements to make them consistent with the higher seat back heights.

2. Require lap/shoulder belt restraints instead of the current lap belts for small school buses.

3. Require voluntarily-installed lap belts and lap/shoulder belt systems in large school buses to meet performance requirements.

4. Add a quasi-static test for all passenger seats with lap/shoulder belts, to ensure compatibility between compartmentalization and lap/shoulder belt systems.

5. Specify a minimum seat belt width of 15 inches for all passenger school bus seats with lap/shoulder belts.

6. Require all seat bottom cushions that are designed to flip-up to have a self-latching mechanism.

It is noted that this list does not include FMVSS No. 209, because that standard already applies to seat belt assemblies for use in buses, a vehicle class that includes—by definition—school buses. (See ''school bus'' definition in 49 CFR 571.3.)

List of Subjects in 49 CFR Part 571

Imports, Motor vehicle safety, Motor vehicles, and Tires.

In consideration of the foregoing, NHTSA proposes to amend 49 CFR Part 571 as set forth below.

PART 571—FEDERAL MOTOR VEHICLE SAFETY STANDARDS

1.The authority citation for Part 571 continues to read as follows:

Authority: 49 U.S.C. 322, 30111, 30115, 30117 and 30166; delegation of authority at 49 CFR 1.50.

2. Section 571.207 is amended by revising the introductory text of S4.2, to read as follows:

§ 571.207 Standard No. 207; Seating systems.

* * * * *

S4.2. *General performance requirements.* When tested in accordance with S5, each occupant seat shall withstand the following forces, in newtons, except for a side-facing seat, a passenger seat on a bus other than a school bus, a passenger seat on a school bus with a GVWR greater than 4,536 kilograms (10,000 pounds), and a passenger seat on a school bus with a GVWR less than or equal to 4,536 kg manufactured before [*insert compliance date of the final rule*].

* * * * *

3. Section 571.208 is amended by revising S4.4.3.3, adding S7.1.5, and revising the heading of S4.4.5 and S4.4.5.1, to read as follows:

§ 571.208 Standard No. 208; Occupant crash protection.

* * * * *

S4.4.3.3 *School buses with a gross vehicle weight rating of 4,536 kg (10,000 pounds) or less.*

(a) Each school bus with a gross vehicle weight rating of 4,536 kg (10,000 pounds) or less manufactured before [*compliance date to be inserted*] must be equipped with an integral Type 2 seat belt assembly at the driver's designated seating position and at the right front passenger's designated seating position (if any), and with a Type 1 or Type 2 seat belt assembly at all other designated seating positions. Type 2 seat belt assemblies installed in compliance with this requirement must comply with Standard No. 209 (49 CFR 571.209) and with S7.1 and S7.2 of this standard. The lap belt portion of a Type 2 seat belt assembly installed at the driver's designated seating position and at the right front passenger's designated seating position (if any) must meet the requirements specified in S4.4.3.3(c).

(b) Each school bus with a gross vehicle weight rating of 4,536 kg (10,000 pounds) or less manufactured on or after [*compliance date to be inserted*] must be equipped with an integral Type 2 seat belt assembly at all designated seating positions. The seat belt assembly at the driver's designated seating position and at the right front passenger's designated seating position (if any) shall comply with Standard No. 209 (49 CFR 571.209) and with S7.1 and S7.2 of this standard. The lap belt portion of a Type 2 seat belt assembly installed at the driver's designated seating position and at the right front passenger's designated seating position (if any) shall meet the requirements specified in S4.4.3.3(c). Type 2 seat belt assemblies installed on the rear seats of school buses must meet the requirements of S7.1.1.5, S7.1.5 and S7.2 of this standard.

(c) The lap belt portion of a Type 2 seat belt assembly installed at the driver's designated seating position and at the right front passenger's designated seating position (if any) shall include either an emergency locking retractor or an automatic locking retractor, which retractor shall not retract webbing to the next locking position until at least ¾ inch of webbing has moved into the retractor. In determining whether an automatic locking retractor complies with this requirement, the webbing is extended to 75 percent of its length and the retractor is locked after the initial adjustment. If a Type 2 seat belt assembly installed in compliance with this requirement incorporates any webbing tension-relieving device, the vehicle owner's manual shall include the information specified in S7.4.2(b) of this standard for the tension-relieving device, and the vehicle shall comply with S7.4.2(c) of this standard.

* * * * *

S4.4.5 *Buses with a GVWR of 10,000 lb (4,536 kg) or less, except school buses, manufactured on or after September 1, 2007.*

S4.4.5.1 Except as provided in S4.4.5.2, S4.4.5.3, S4.4.5.4, S4.4.5.5 and S4.4.5.6, each bus as with a gross vehicle weight rating of 10,000 lb (4,536 kg) or less, except school buses, shall be equipped with a Type 2 seat belt assembly at every designated seating position other than a side-facing position. Type 2 seat belt assemblies installed in compliance with this requirement shall conform to Standard No. 209 (49 CFR 571.209) and with S7.1 and S7.2 of this standard. If a Type 2 seat belt assembly installed in compliance with this requirement incorporates a webbing tension relieving device, the vehicle owner's manual shall include the information specified in S7.3.1(b) of this standard for the tension relieving device, and the vehicle shall conform to S7.4.2(c) of this standard. Side-facing designated seating positions shall be equipped, at the manufacturer's option, with a Type 1 or Type 2 seat belt assembly.

* * * * *

S7.1.5 The seat belt assembly will operate by means of any emergency-locking or automatic-locking retractor that conforms to 49 CFR 571.209 to restrain persons whose dimensions range from those of an average 6-year-old child to those of a 50th percentile adult male. The seat back may be in any position.

* * * * *

4. Section 571.210 is amended by revising S2, amending S3 by adding definitions for ''school bus torso belt adjusted height'' and ''school bus torso belt anchor point,'' in alphabetical order, adding S4.1.3, and S4.1.3.1

through S4.1.3.5, and adding Figure 4 to the end of the section to read as follows:

§ 571.210 Standard No. 210; Seat belt assembly anchorages.

* * * * *

S2. *Application*. This standard applies to passenger cars, multipurpose passenger vehicles, trucks, buses, and school buses.

S3. Definitions.

* * * * *

School bus torso belt adjusted height means the point at which the torso belt deviates more than 10 degrees from the horizontal plane when the torso belt is pulled away from the seat by a 20 N force at a location on the webbing approximately 100 mm from the adjustment device and the pulled portion of the webbing is held in a horizontal plane.

School bus torso belt anchor point means the midpoint of the torso belt width where the torso belt first contacts the torso belt anchorage.

* * * * *

S4.1.3 *School bus passenger seats*.

S4.1.3.1 Seat belt anchorages on school buses manufactured on or after [*insert compliance date of the final rule*] must be attached to the school bus seat structure and the seat belt shall be Type 1 or Type 2 as defined in S3 of FMVSS No. 209 (49 CFR 571.209).

S4.1.3.2 Type 2 seat belt anchorages on school buses manufactured on or after [*insert compliance date of the final rule*] must meet the location requirements specified in Figure 4. The vertical height of the school bus torso belt anchor point must be at least 520 mm above the seating reference point. The school bus torso belt adjusted height must be adjustable from the torso belt anchor point to within at least 280 mm of the seating reference point.

S4.1.3.3 School buses with a GVWR less than or equal to 4,536 kg (10,000 pounds) must meet the requirements of S4.1.1 of this standard.

S4.1.3.4 School buses with a GVWR greater than 4,536 kg (10,000 pounds) manufactured on or after [*insert compliance date of the final rule*], with Type 1 seat belt anchorages, must meet the strength requirements specified in S4.2.1 of this standard.

S4.1.3.5 School buses with a GVWR greater than 4,536 kg (10,000 pounds) manufactured on or after [*insert compliance date of the final rule*], with Type 2 seat belt anchorages, must meet the strength requirements specified in S4.2.2 of this standard.

* * * * *

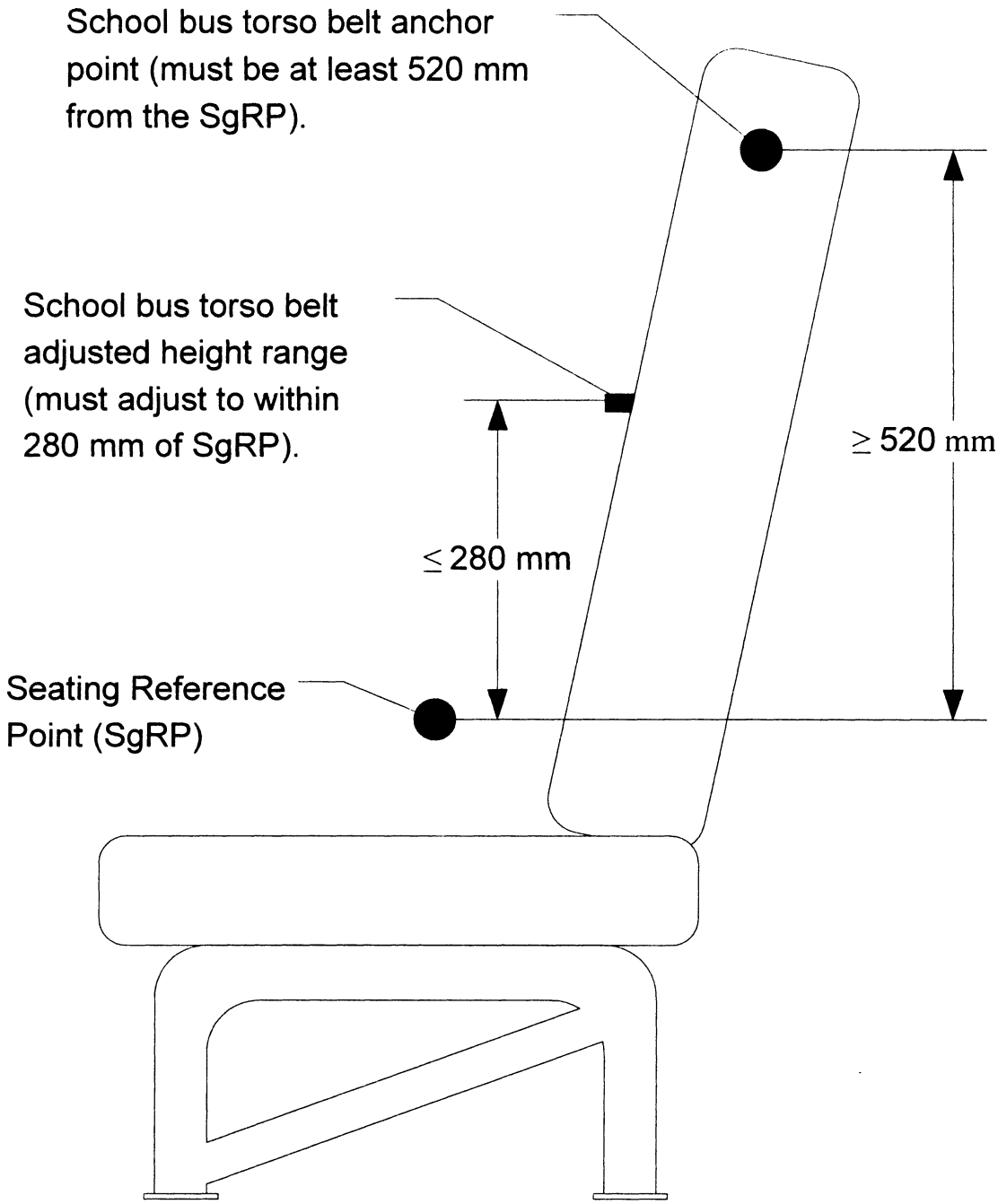

Figure 4 - Seat belt anchorage diagram

BILLING CODE 4910–59–C

5. Section 571.222 is amended by:

a. Adding to S4, in alphabetical order, a definition of ''seat bench width''

b. Revising S4.1, paragraphs S5(a) and (b), and paragraph S5.1.2;

c. Redesignating S5.1.5 as S5.1.5(a) and adding paragraph S5.1.5(b);

d. Adding S5.1.6 and S5.1.7; and revising S5.2.2; and,

e. Adding Figure 8 following Figure 7 at the end of the section.

The revisions and additions read as follows:

§ 571.222 Standard No. 222; School bus passenger seating and crash protection.

* * * * *

S4. *Definitions.*

* * * * *

Seat bench width means the maximum transverse width of the bench seat cushion.

* * * * *

S4.1 *Determination of the number of seating positions and seat belt positions*

(a) The number of seating positions considered to be in a bench seat for vehicles manufactured before [*insert compliance date here*] is expressed by the symbol W, and calculated as the seat bench width in millimeters divided by 381 and rounded to the nearest whole number.

(b) The number of seating positions and the number of Type 1 seat belt

positions considered to be in a bench seat for vehicles manufactured on or after [*insert compliance date here*] is expressed by the symbol W, and calculated as the seat bench width in millimeters divided by 380 and rounded to the nearest whole number.

(c) The number of seat belt positions in a bench seat equipped with Type 2 seat belts for vehicles manufactured on or after [*insert compliance date here*] is expressed by the symbol Y, and calculated as the seat bench width in millimeters divided by 380 and rounded to the next lowest whole number. The minimum seat bench width for a seat equipped with a Type 2 belt is 380 mm.

* * * * *

S5. *Requirements.*

(a) *Large school buses.*

(1) Each school bus manufactured before [insert compliance date] with a gross vehicle weight rating of more than 4,536 kg (10,000 pounds) shall be capable of meeting any of the requirements set forth under this heading when tested under the conditions of S6. However, a particular school bus passenger seat (i.e., a test specimen) in that weight class need not meet further requirements after having met S5.1.2 and S5.1.5, or having been subjected to either S5.1.3, S5.1.4, or S5.3.

(2) Each school bus manufactured on or after [insert compliance date] with a gross vehicle weight rating of more than 4,536 kg (10,000 pounds) shall be capable of meeting any of the requirements set forth under this heading when tested under the conditions of S6 of this standard or § 571.210. However, a particular school bus passenger seat (i.e., a test specimen) in that weight class need not meet further requirements after having met S5.1.2 and S5.1.5, or having been subjected to either S5.1.3, S5.1.4, S5.1.6 (if applicable), or S5.3. Each vehicle with voluntarily installed Type 1 seat belts and seat belt anchorages at W seating positions in a bench seat or Type 2 seat belts and seat belt anchorages at Y seat belt positions in a bench seat shall also meet the requirements of:

(i) 4.4.3.3 of Standard No. 208 (49 CFR 571.208);

(ii) Standard No. 209 (49 CFR 571.209), as they apply to school buses; and

(iii) Standard No. 210 (49 CFR § 571.210) as it applies to school buses with a gross vehicle weight rating greater than 10,000 pounds.

(b) *Small school buses.* Each vehicle with a gross vehicle weight rating of 4,536 kg (10,000 pounds) or less shall be capable of meeting the following requirements at all rear seating positions:

(1)(i) In the case of vehicles manufactured before September 1, 1991, the requirements of §§ 571.208, 571.209, and 571.210 as they apply to multipurpose passenger vehicles;

(ii) In the case of vehicles manufactured on or after September 1, 1991, the requirements of S4.4.3.3 of § 571.208 and the requirements of §§ 571.209 and 571.210 as they apply to school buses with a gross vehicle weight rating of 4,536 kg or less;

(iii) In the case of vehicles manufactured on or after [*insert compliance date of the final rule*] the requirements of S4.4.3.3(b) of § 571.208 and the requirements of §§ 571.209 and 571.210 as they apply to school buses with a gross vehicle weight rating of 4,536 kg or less; and

(2) The requirements of S5.1.2, S5.1.3, S5.1.4, S5.1.5, S5.1.6, S5.3, and S5.4 of this standard. However, the requirements of §§ 571.208 and 571.210 shall be met at Y seat belt positions in a bench seat, and a particular school bus passenger seat (i.e. a test specimen) in that weight class need not meet further requirements after having met S5.1.2 and S5.1.5, or after having been subjected to either S5.1.3, S5.1.4, S5.1.6, or S5.3 of this standard or § 571.210 or § 571.225.

* * * * *

S5.1.2 *Seat back height, position, and surface area.*

(a) For school buses manufactured before [*compliance date to be inserted*], each school bus passenger seat must be equipped with a seat back that has a vertical height of at least 508 mm (20 inches) above the seating reference point. Each school bus passenger seat must be equipped with a seat back that, in the front projected view, has front surface area above the horizontal plane that passes through the seating reference point, and below the horizontal plane 508 mm (20 inches) above the seating reference point, of not less than 90 percent of the seat bench width in millimeters multiplied by 508.

(b) For school buses manufactured on or after [*compliance date to be inserted*], each school bus passenger seat must be equipped with a seat back that has a vertical height of at least 610 mm (24 inches) above the seating reference point. The minimum total width of the seat back at 610 mm (24 inches) above the seating reference point shall be 75 percent of the maximum width of the seat bench. Each school bus passenger seat must be equipped with a seat back that, in the front projected view, has front surface area above the horizontal plane that passes through the seating reference point, and below the horizontal plane 610 mm (24 inches) above the seating reference point, of not less than 90 percent of the seat bench width in millimeters multiplied by 610.

* * * * *

S5.1.5 *Seat cushion retention.*

* * * * *

(b) For school buses manufactured on or after [*compliance date to be inserted*], school bus passenger seat cushions equipped with attachment devices that allow for the seat cushion to be removable without tools or to flip up must have a self-latching mechanism that is activated when a 22 kg (48.4 pound) mass is placed on the center of the seat cushion with the seat cushion in the down position.

S5.1.6 Quasi-static test of compartmentalization and Type 2 seat belt performance.

S5.1.6.1 This section applies to rear passenger seats on school buses manufactured on or after [*compliance date to be inserted*] with a gross vehicle weight rating of more than 4,536 kg (10,000 pounds), and that are equipped with Type 2 seat belt assemblies. When tested under the conditions of S5.1.6.5.1 through S5.1.6.5.6, the school bus torso belt anchor point must not displace horizontally forward more than the value in millimeters calculated from the following expression:

$$(AH + 100)\ (\tan\Phi + 0.174/\cos\Phi)\ \text{mm}$$

where AH is the height in millimeters of the school bus torso belt anchor point defined by S4.1.3.2 of FMVSS No. 210 (49 CFR 571.210) and Φ is the angle of the posterior surface of the seat back defined in S5.1.6.3 of this standard.

S5.1.6.2 This section applies to rear passenger seats on school buses manufactured on or after [*compliance date to be inserted*] with a gross vehicle weight rating less than or equal to 4,536 kg (10,000 pounds), equipped with Type 2 seat belt assemblies. When tested under the conditions of S5.1.6.5.1 through 5.1.6.5.6, the school bus torso belt anchor point must not displace horizontally forward more than the value in millimeters calculated from the following expression:

$$(AH + 100)\ (\tan\Phi + 0.259/\cos\Phi)\ \text{mm}$$

where AH is the height in millimeters of the school bus torso belt anchor point defined by S4.1.3.2 of FMVSS No. 210 (49 CFR 571.210) and Φ is the angle of the posterior surface of the seat back defined in S5.1.6.3 of this standard.

S5.1.6.3 *Angle of the posterior surface of a seat back.* Position the loading bar specified in S6.5 of this standard so that it is laterally centered

behind the seat back with the bar's longitudinal axis in a transverse plane of the vehicle in a horizontal plane within ± 6 mm (0.25 inches) of the horizontal plane passing through the seating reference point and move the bar forward against the seat back until a force of 44 N (10 pounds) has been applied. Position a second loading bar as described in S6.5 of this standard so that it is laterally centered behind the seat back with the bar's longitudinal axis in a transverse plane of the vehicle and in the horizontal plane 406 ± 6 mm (16 ± 0.25 inches) above the seating reference point, and move the bar forward against the seat back until a force of 44 N (10 pounds) has been applied. Determine the angle from vertical of a line in the longitudinal vehicle plane that passes through the geometric center of the cross-section of each cylinder, as shown in Figure 8. That angle is the angle of the posterior surface of the seat back.

S5.1.6.4 The seat back must absorb 452W joules of energy when subjected to the force specified in S5.1.6.5.7.

S5.1.6.5 *Quasi-static test procedure.*

S5.1.6.5.1 If the seat back inclination is adjustable, the seat back is placed in the manufacturer's normal design riding position. If such a position is not specified, the seat back is positioned so it is in the most upright position.

S5.1.6.5.2 Position the lower loading bar specified in S6.5 of this standard so that it is laterally centered behind the seat back with the bar's longitudinal axis in a transverse plane of the vehicle and in any horizontal plane between 102 mm (4 inches) above and 102 mm (4 inches) below the seating reference point of the school bus passenger seat behind the test specimen. Position the upper loading bar described in S6.5 so that it is laterally centered behind the seat back with the bar's longitudinal axis in a transverse plane of the vehicle and in the horizontal plane 406 mm (16 inches) above the seating reference point of the school bus passenger seat behind the test specimen.

S5.1.6.5.3 Apply a force of 3,114W N (700W pounds) horizontally in the forward direction through the lower loading bar specified at S6.5 at the pivot attachment point. Reach the specified load in not less than 5 and not more than 30 seconds. No sooner than 1.0 second after attaining the required force, reduce that force to 1,557W N (350W pounds) and maintain the pivot point position of the loading bar at the position where the 1,557W N (350W pounds) is attained until the completion of S5.1.6.5.5 and S5.1.6.5.6 of this standard.

S5.1.6.5.4 Position the body block specified in Figure 3 of FMVSS No. 210 (49 CFR 571.210) under each torso belt (between the torso belt and the seat back) in the passenger seat and apply a preload force of 300 N (67 pounds) on each body block in a forward direction parallel to the longitudinal centerline of the vehicle pursuant to the specifications of FMVSS No. 210 (49 CFR 571.210). After preload application is complete, the origin of the 203 mm body block radius at any point across the 102 mm body block thickness shall lie within the zone defined by S5.1.6.5.3(a) through S5.1.6.5.3(c):

(a) At or rearward of a transverse vertical plane of the vehicle located 100 mm forward of the seating reference point.

(b) At or above a horizontal plane located 195 mm above the seating reference point.

(c) At or below a horizontal plane located 345 mm above the seating reference point.

(d) Determination of the seating reference point is provided by the manufacturer; alternatively, if the seating reference point is not provided by the manufacturer, NHTSA will make its own determination as to the seating reference point.

S5.1.6.5.5 (a) For school buses with a gross vehicle weight rating of 4,536 kg (10,000 pounds) or less, simultaneously apply the following force to each body block:

(1) If ((seat bench width in mm) − (380Y)) is 25 mm (1 inch) or less, apply 5,000 N (1,124 pounds); or

(2) If ((seat bench width in mm) − (380Y)) is greater than 25 mm (1 inch), apply 7,500 N (1,686 pounds).

(b) For school buses with a gross vehicle weight rating of greater than 4,536 kg (10,000 pounds) simultaneously apply the following force to each body block:

(1) If ((seat bench width in mm) − (380Y)) is 25 mm (1 inch) or less, apply 3,300 N (742 pounds); or

(2) If ((seat bench width in mm) − (380Y)) is greater than 25 mm (1 inch), apply 5,000 N (1,124 pounds).

S5.1.6.5.6 Reach the specified load in not less than 5 and not more than 30 seconds. Measure the torso belt anchor point horizontal displacement and then remove the body block.

S5.1.6.5.7 Apply an additional force horizontally in the forward direction through the upper bar until 452W joules of energy have been absorbed in deflecting the seat back. The maximum travel of the pivot attachment point for the upper loading bar shall not exceed 356 mm as measured from the position at which the initial application of 44 N of force is attained. Apply the additional load in not less than 5 seconds and not more than 30 seconds. Maintain the pivot attachment point at the maximum forward travel position for not less than 5 seconds, and not more than 10 seconds and release the load in not less than 5 seconds and not more than 30 seconds. (For the determination of S5.1.6.5.7, the energy calculation describes only the force applied through the upper loading bar, and the forward and rearward travel distance of the upper loading bar pivot attachment point measured from the position at which the initial application of 44 N of force is attained.) If energy absorption of 452W joules cannot be obtained by the seat back, the test procedure is terminated and the seat back is determined to have failed to meet S5.1.6.4.

S5.1.7 *Minimum seat width.* For school buses manufactured on or after [*compliance date to be inserted*], each passenger seating position with a Type 2 restraint system shall have a minimum seating width and seat belt anchor width of 380 mm (15 inches).

* * * * *

S5.2.2 *Barrier height, position, and rear surface area.* The position and rear surface area of the restraining barrier shall be such that, in a front projected view of the bus, each point of the barrier's perimeter coincides with or lies outside of the perimeter of the minimum seat back area required by S5.1.2 for the seat immediately rearward of the restraining barrier.

* * * * *

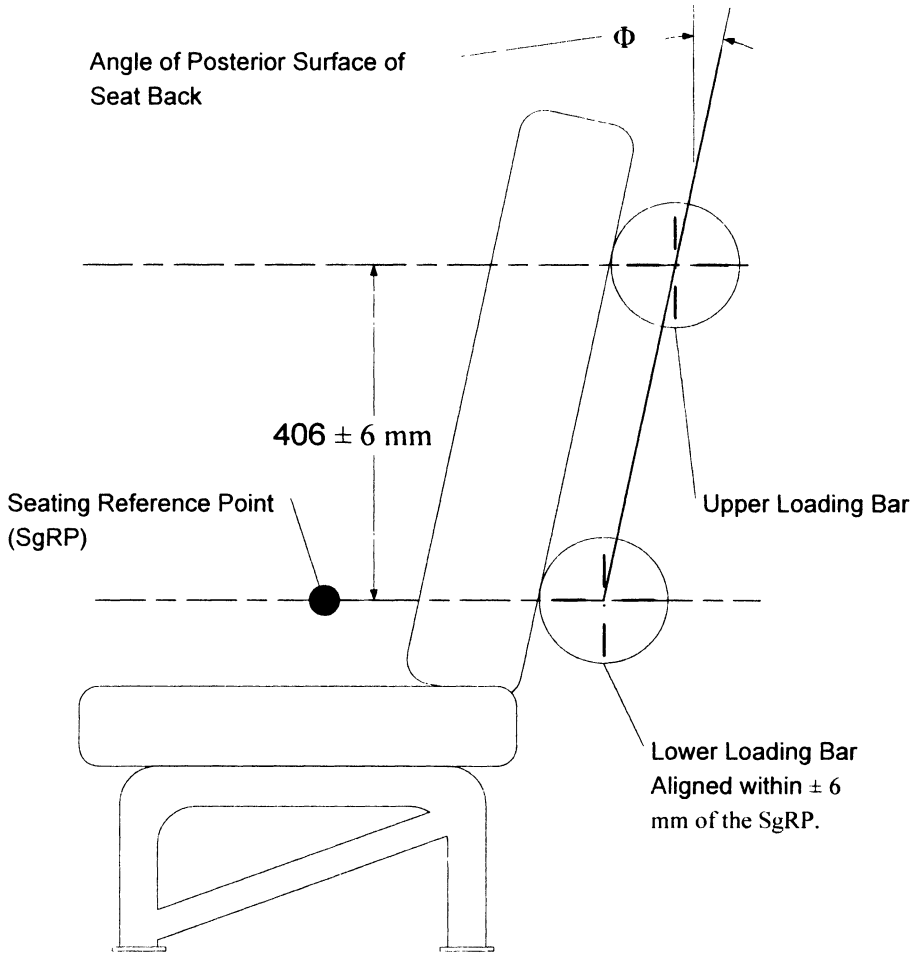

Figure 8 – Definition of initial angle of compartmentalizing seat back surface

Issued on: November 15, 2007.

Ronald L. Medford,

Senior Associate Administrator for Vehicle Safety.

[FR Doc. 07–5758 Filed 11–19–07; 10:00 am]

BILLING CODE 4910–59–P

DEPARTMENT OF TRANSPORTATION

National Highway Traffic Safety Administration

49 CFR Part 594

[Docket No. NHTSA 2007–0037; Notice 1]

RIN 2127–AK10

Schedule of Fees Authorized by 49 U.S.C. 30141 Offer of Cash Deposits or Obligations of the United States in Lieu of Sureties on DOT Conformance Bonds

AGENCY: National Highway Traffic Safety Administration (NHTSA), DOT.

ACTION: Notice of proposed rulemaking (NPRM).

SUMMARY: This document proposes to amend NHTSA's regulations that prescribe fees authorized by 49 U.S.C. Sec. 30141 for various functions performed by the agency with respect to the importation of motor vehicles that do not conform to all applicable Federal motor vehicle safety and bumper standards. An importer must file with U.S. Customs and Border Protection (CBP) a Department of Transportation (DOT) conformance bond at the time that a nonconforming motor vehicle is offered for importation into the United States, or in lieu of such a bond, the importer may post cash deposits or obligations of the United States to ensure that the vehicle will be brought into conformance with all applicable standards within 120 days from the date of importation, or will be exported from, or abandoned to, the United States. To avoid the costs of a DOT conformance bond, some importers have sought to post cash deposits, which would relieve the importers of the bonding costs but cause the agency to expend considerable resources. To permit the government to recover these expenses, this amendment would establish a fee for the agency's processing of these cash deposits or obligations of the United States that are furnished in lieu of a DOT conformance bond.

DATES: You should submit your comments early enough to ensure that Docket Management receives them not later than January 7, 2008.

ADDRESSES: Comments should refer to the docket and notice numbers above and be submitted by any of the following methods:

- *Federal eRulemaking Portal:* Go to *http://www.regulations.gov*. Follow the online instructions for submitting comments.
- *Mail: Docket Management Facility:* U.S. Department of Transportation, 1200 New Jersey Avenue, SE., West Building