12–4–07 Tuesday
Vol. 72 No. 232 Dec. 4, 2007

Pages 68041–68470

Federal Register

The **FEDERAL REGISTER** (ISSN 0097–6326) is published daily, Monday through Friday, except official holidays, by the Office of the Federal Register, National Archives and Records Administration, Washington, DC 20408, under the Federal Register Act (44 U.S.C. Ch. 15) and the regulations of the Administrative Committee of the Federal Register (1 CFR Ch. I). The Superintendent of Documents, U.S. Government Printing Office, Washington, DC 20402 is the exclusive distributor of the official edition. Periodicals postage is paid at Washington, DC.

The **FEDERAL REGISTER** provides a uniform system for making available to the public regulations and legal notices issued by Federal agencies. These include Presidential proclamations and Executive Orders, Federal agency documents having general applicability and legal effect, documents required to be published by act of Congress, and other Federal agency documents of public interest.

Documents are on file for public inspection in the Office of the Federal Register the day before they are published, unless the issuing agency requests earlier filing. For a list of documents currently on file for public inspection, see *www.archives.gov.*

The seal of the National Archives and Records Administration authenticates the Federal Register as the official serial publication established under the Federal Register Act. Under 44 U.S.C. 1507, the contents of the **Federal Register** shall be judicially noticed.

The **Federal Register** is published in paper and on 24x microfiche. It is also available online at no charge as one of the databases on GPO Access, a service of the U.S. Government Printing Office.

The online edition of the **Federal Register** *www.gpoaccess.gov/nara,* available through GPO Access, is issued under the authority of the Administrative Committee of the Federal Register as the official legal equivalent of the paper and microfiche editions (44 U.S.C. 4101 and 1 CFR 5.10). It is updated by 6 a.m. each day the **Federal Register** is published and includes both text and graphics from Volume 59, Number 1 (January 2, 1994) forward.

For more information about GPO Access, contact the GPO Access User Support Team, call toll free 1-888-293-6498; DC area 202-512-1530; fax at 202-512-1262; or via e-mail at *gpoaccess@gpo.gov.* The Support Team is available between 7:00 a.m. and 9:00 p.m. Eastern Time, Monday–Friday, except official holidays.

The annual subscription price for the **Federal Register** paper edition is $749 plus postage, or $808, plus postage, for a combined **Federal Register, Federal Register** Index and List of CFR Sections Affected (LSA) subscription; the microfiche edition of the **Federal Register** including the **Federal Register** Index and LSA is $165, plus postage. Six month subscriptions are available for one-half the annual rate. The prevailing postal rates will be applied to orders according to the delivery method requested. The price of a single copy of the daily **Federal Register,** including postage, is based on the number of pages: $11 for an issue containing less than 200 pages; $22 for an issue containing 200 to 400 pages; and $33 for an issue containing more than 400 pages. Single issues of the microfiche edition may be purchased for $3 per copy, including postage. Remit check or money order, made payable to the Superintendent of Documents, or charge to your GPO Deposit Account, VISA, MasterCard, American Express, or Discover. Mail to: U.S. Government Printing Office—New Orders, P.O. Box 979050, St. Louis, MO 63197-9000; or call toll free 1-866-512-1800, DC area 202-512-1800; or go to the U.S. Government Online Bookstore site, see *bookstore.gpo.gov.*

There are no restrictions on the republication of material appearing in the **Federal Register.**

How To Cite This Publication: Use the volume number and the page number. Example: 72 FR 12345.

Postmaster: Send address changes to the Superintendent of Documents, Federal Register, U.S. Government Printing Office, Washington, DC 20402, along with the entire mailing label from the last issue received.

SUBSCRIPTIONS AND COPIES

PUBLIC

Subscriptions:

Paper or fiche	**202–512–1800**
Assistance with public subscriptions	**202–512–1806**

General online information **202–512–1530; 1–888–293–6498**

Single copies/back copies:

Paper or fiche	**202–512–1800**
Assistance with public single copies	**1–866–512–1800 (Toll-Free)**

FEDERAL AGENCIES

Subscriptions:

Paper or fiche	**202–741–6005**
Assistance with Federal agency subscriptions	**202–741–6005**

FEDERAL REGISTER WORKSHOP

THE FEDERAL REGISTER: WHAT IT IS AND HOW TO USE IT

FOR: Any person who uses the Federal Register and Code of Federal Regulations.

WHO: Sponsored by the Office of the Federal Register.

WHAT: Free public briefings (approximately 3 hours) to present:

1. The regulatory process, with a focus on the Federal Register system and the public's role in the development of regulations.

2. The relationship between the Federal Register and Code of Federal Regulations.

3. The important elements of typical Federal Register documents.

4. An introduction to the finding aids of the FR/CFR system.

WHY: To provide the public with access to information necessary to research Federal agency regulations which directly affect them. There will be no discussion of specific agency regulations.

WHEN: Tuesday, December 11, 2007
9:00 a.m.–Noon

WHERE: Office of the Federal Register
Conference Room, Suite 700
800 North Capitol Street, NW.
Washington, DC 20002

RESERVATIONS: (202) 741–6008

Printed on recycled paper.

Contents

Federal Register

Vol. 72, No. 232

Tuesday, December 4, 2007

Agriculture Department
NOTICES
Agency information collection activities; proposals, submissions, and approvals, 68122

Antitrust Division
NOTICES
Competitive impact statements and proposed consent judgments:
Vulcan Materials Co. et al., 68180–68193

Arts and Humanities, National Foundation
See National Foundation on the Arts and the Humanities

Centers for Medicare & Medicaid Services
RULES
Medicaid:
Optional State plan case management services, 68077–68093
Medicare:
Physicians' referrals to health care entities with which they have financial relationships (Phase III)
Correction, 68075–68077

Children and Families Administration
NOTICES
Agency information collection activities; proposals, submissions, and approvals, 68166

Coast Guard
PROPOSED RULES
Drawrdige operations:
Florida, 68116–68118
NOTICES
Agency information collection activities; proposals, submissions, and approvals, 68171–68174

Commerce Department
See Economic Analysis Bureau
See International Trade Administration
See National Institute of Standards and Technology
See National Oceanic and Atmospheric Administration

Copyright Office, Library of Congress
NOTICES
Copyright office and procedures:
Satellite carrier compulsory license; rate adjustment, 68198–68199

Defense Department
NOTICES
Civilian health and medical program of uniformed services (CHAMPUS):
TRICARE program—
Autism Services Enhanced Access Demonstration Project, 68130–68132

Drug Enforcement Administration
NOTICES
Registration revocations, restrictions, denials, reinstatements:
Sabbagh, Ammar, 68196–68197
Applications, hearings, determinations, etc.:
Boehringer Ingelheim Chemicals Inc., 68193
Cerilliant Corp., 68193–68195
Chattem Chemicals, Inc., 68195–68196
Chemic Laboratories, Inc., 68196

Economic Analysis Bureau
NOTICES
Reports and guidance documents; availability, etc.:
Data sharing activity; data provided to Bureau of Labor Statistics for statistical purposes, 68122–68123

Election Assistance Commission
NOTICES
Meetings; Sunshine Act, 68132

Energy Department
See Federal Energy Regulatory Commission

Environmental Protection Agency
RULES
Air quality implementation plans; approval and promulgation; various States:
Missouri, 68072–68075
Superfund program:
National oil and hazardous substances contingency plan priorities list
Correction, 68075
PROPOSED RULES
Air quality implementation plans; approval and promulgation; various States:
Missouri, 68118–68119
Wisconsin, 68119–68121
NOTICES
Air programs:
State implementation plans; adequacy status for transportation conformity purposes—
Wisconsin, 68160–68161
State operating permit programs—
Wisconsin, 68161–68162
Meetings:
Scientific Counselors Board, 68162–68163

Executive Office of the President
See Presidential Documents

Farm Credit Administration
RULES
Farm credit system:
Disclosure to shareholders—
Annual report; preparation and distribution, 68060–68062

Federal Aviation Administration
RULES
Standard instrument approach procedures, 68062–68064
PROPOSED RULES
Airworthiness directives:
Boeing, 68106–68107
Cirrus Design Corp., 68108–68111

NOTICES
Advisory circulars; availability, etc.:
Aircraft Certification Service, advisory circulars, policy documents, and technical standard orders, 68229–68230

Federal Energy Regulatory Commission
NOTICES
Environmental statements; availability, etc.:
Rockies Express Pipeline, LLC, 68138–68139
Hydroelectric applications, 68139–68160
Natural gas pipeline rate and refund report filing, 68160
Applications, hearings, determinations, etc.:
CenterPoint Energy Gas Transmission Co., 68133–68134
Columbia Gulf Transmission Co., 68134
Enogex Inc., 68135
Florida Gas Transmission Co., LLC, 68135
McClendon, Stan, 68135–68136
Pypha Energy LLC, 68136
Questar Overthrust Pipeline Co., 68136
Rockies Express Pipeline LLC, 68137
Tennessee Gas Pipeline Co., 68137–68138

Federal Reserve System
NOTICES
Banks and bank holding companies:
Formations, acquisitions, and mergers, 68163
Meetings; Sunshine Act, 68163–68164

Federal Trade Commission
NOTICES
Prohibited trade practices:
Great Atlantic and Pacific Tea Company Inc. et al., 68164–68166

Fish and Wildlife Service
NOTICES
Comprehensive conservation plans; availability, etc.:
Charles M. Russell and UL Bend National Wildlife Refuges, MT, 68174–68176
Endangered and threatened species and marine mammal permit applications, determinations, etc., 68176–68177
Wild Bird Conservation Act:
Green-winged king-parrot, etc.; cooperative breeding program, 68177

Food and Drug Administration
RULES
Human drugs:
Current good manufacturing practices—
Finished pharmaceuticals, 68064–68070
PROPOSED RULES
Human drugs:
Current good manufacturing practices—
Finished pharmaceuticals, 68113–68116
Finished pharmaceuticals; manufacturing, quality control, and documentation requirements; withdrawn, 68111–68113
NOTICES
Food additive petitions:
DSM Nutritional Products, Inc., 68166–68167

Health and Human Services Department
See Centers for Medicare & Medicaid Services
See Children and Families Administration
See Food and Drug Administration
See National Institutes of Health
See Substance Abuse and Mental Health Services Administration

Homeland Security Department
See Coast Guard
See Transportation Security Administration

Interior Department
See Fish and Wildlife Service
See Land Management Bureau
See National Park Service

International Trade Administration
NOTICES
Antidumping:
Stainless steel wire rods from—
India, 68123–68124
Uranium from—
Russian Federation, 68124–68127
Countervailing duties:
Pasta from—
Italy, 68128
Export trade certificates of review, 68128

Justice Department
See Antitrust Division
See Drug Enforcement Administration

Labor Department
NOTICES
Agency information collection activities; proposals, submissions, and approvals, 68197–68198

Land Management Bureau
NOTICES
Public land orders:
Montana; public meeting, 68177–68178

Library of Congress
See Copyright Office, Library of Congress

Maritime Administration
NOTICES
Agency information collection activities; proposals, submissions, and approvals, 68230
Coastwise trade laws; administrative waivers:
ASPIRE, 68231

National Aeronautics and Space Administration
NOTICES
Meetings:
NASA International Space Station Advisory Committee, 68199

National Foundation on the Arts and the Humanities
NOTICES
Agency information collection activities; proposals, submissions, and approvals, 68199–68200

National Highway Traffic Safety Administration
RULES
Motor vehicle safety standards:
Lamps, reflective devices and associated equipment, 68234–68439
Motor homes and recreation vehicle trailers over 10,000 pounds; cargo carrying capacity; tire selection and rims, 68442–68466
NOTICES
Meetings:
Emergency Medical Services Federal Interagency Committee, 68231–68232

National Institute of Standards and Technology
NOTICES
Meetings:
National Construction Safety Team Advisory Committee, 68128–68129

National Institutes of Health
NOTICES
Meetings:
National Institute of Allergy and Infectious Diseases, 68167
National Institute of Child Health and Human Development, 68169
National Institute of General Medical Sciences, 68167
National Institute of Mental Health, 68167–68168
National Institute of Neurological Disorders and Stroke, 68168–68169
National Institute on Aging, 68168
Reports and guidance documents; availability, etc.:
National Institute of Mental Health strategic plan, 68169

National Oceanic and Atmospheric Administration
RULES
Fishery conservation and management:
Northeastern United States fisheries—
Atlantic hagfish, 68096–68097
Summer flounder, 68095–68096
West Coast States and Western Pacific fisheries—
Pacific Coast groundfish, 68097–68105
International fisheries regulations:
Northwest Atlantic Fisheries Organization Regulatory Area; fish quotas and effort allocation, 68093–68095
NOTICES
Endangered and threatened species:
Johnson's seagrass; 5-year review, 68129–68130

National Park Service
NOTICES
Concession contracts and permits:
Expiring contracts; extension, 68178–68179
National Register of Historic Places; pending nominations, 68179–68180

Nuclear Regulatory Commission
RULES
Energy Policy Act of 2005; implementation:
Byproduct material; expanded definition; waiver termination, 68043
Radiation protection standards:
Occupational dose records, labeling containers, and total effective dose equivalent, 68043–68059
NOTICES
Environmental statements; availability, etc.:
Army Department; Armament Research, Development, and Engineering Center, Picatinny Arsenal, NJ, 68203–68205
Meetings:
Nuclear Waste and Materials Advisory Committee, 68205
Meetings; Sunshine Act, 68205–68206
Operating licenses, amendments; no significant hazards considerations; biweekly notices, 68206–68224
Applications, hearings, determinations, etc.:
Davis, Keith, 68200–68202
Dominion Nuclear North Anna, LLC, 68202–68203

Postal Service
NOTICES
Meetings; Sunshine Act, 68224–68225

Presidential Documents
PROCLAMATIONS
Special observances:
National Drunk and Drugged Driving Prevention Month (Proc. 8208), 68467–68470
World AIDS Day (Proc. 8207), 68041–68042

Securities and Exchange Commission
NOTICES
Self-regulatory organizations; proposed rule changes:
American Stock Exchange, LLC, 68225–68226
Chicago Board Options Exchange, Inc., 68226–68227
NASDAQ Stock Market LLC, 68228–68229

Small Business Administration
NOTICES
Agency information collection activities; proposals, submissions, and approvals, 68229
Disaster loan areas:
California, 68229

Substance Abuse and Mental Health Services Administration
NOTICES
Federal agency urine drug testing; certified laboratories meeting minimum standards; list, 68169–68171

Surface Transportation Board
NOTICES
Railroad operation, acquisition, construction, etc.:
BNSF Railway Co., 68232

Transportation Department
See Federal Aviation Administration
See Maritime Administration
See National Highway Traffic Safety Administration
See Surface Transportation Board

Transportation Security Administration
NOTICES
Transportation Worker Identification Credential Program:
Enrollment dates for the Ports of Tulsa, OK and Albany, NY, 68174

Treasury Department
See United States Mint

United States Mint
NOTICES
American eagle silver proof coin; price increase, 68232

Veterans Affairs Department
RULES
Medical benefits:
Medical care or services; reasonable charges, 68070–68072

Separate Parts In This Issue

Part II
Transportation Department, National Highway Traffic Safety Administration, 68234–68439

Part III
Transportation Department, National Highway Traffic Safety Administration, 68442–68466

Part IV

Executive Office of the President, Presidential Documents, 68467–68470

Reader Aids

Consult the Reader Aids section at the end of this issue for phone numbers, online resources, finding aids, reminders, and notice of recently enacted public laws.

To subscribe to the Federal Register Table of Contents LISTSERV electronic mailing list, go to http://listserv.access.gpo.gov and select Online mailing list archives, FEDREGTOC-L, Join or leave the list (or change settings); then follow the instructions.

CFR PARTS AFFECTED IN THIS ISSUE

A cumulative list of the parts affected this month can be found in the Reader Aids section at the end of this issue.

3 CFR

Proclamations:

8207 68041
8208 68469

10 CFR

Ch. 1 68043
19 68043
20 68043
50 68043

12 CFR

620 68060

14 CFR

97 68062

Proposed Rules:

39 (2 documents) 68106, 68108

21 CFR

210 68064
211 68064

Proposed Rules:

210 (2 documents) 68111, 68113
211 (2 documents) 68111, 68113

33 CFR

Proposed Rules:

117 68118

38 CFR

17 68070

40 CFR

52 68072
300 68075

Proposed Rules:

52 (2 documents) 68118, 68119

42 CFR

411 68075
424 68075
431 68077
440 68077
441 68077

49 CFR

564 68234
571 (2 documents) 68234, 68442

50 CFR

300 68093
648 (2 documents) 68095, 68096
660 68097

Federal Register
Vol. 72, No. 232
Tuesday, December 4, 2007

Presidential Documents

Title 3—

The President

Proclamation 8207 of November 29, 2007

World AIDS Day, 2007

By the President of the United States of America

A Proclamation

On World AIDS Day, we reaffirm our commitment to fighting and preventing HIV/AIDS in America and around the world. We also remember those who have lost their lives to this terrible disease and those who continue to suffer.

HIV/AIDS is a global challenge. In 2003, my Administration launched the President's Emergency Plan for AIDS Relief (PEPFAR), a $15 billion mobilization, to help support prevention, treatment, and care programs in some of the hardest hit countries around the world. PEPFAR's ABC approach—abstinence, being faithful, and using condoms—with abstinence as the only sure way to avoid the sexual transmission of HIV/AIDS, is helping stop the spread of this devastating disease.

In the United States as well, HIV/AIDS affects too many of our families, neighbors, and friends. We continue to fund research to develop new methods of treatment and prevention, and to emphasize voluntary HIV screening as a routine part of health care. The Ryan White CARE Act has provided Americans in need with better access to medical care, antiretroviral treatments, and counseling. With medicine, support, and their own daily courage, many citizens are managing a condition that was once often fatal.

The pandemic of HIV/AIDS can be defeated. The United States is taking the lead in this great effort, and we stand united with our international partners in combating this virus. We also recognize the essential role that faith-based and community organizations play in providing support and compassion to those living with the disease. By working together, we can give hope and comfort to millions.

NOW, THEREFORE, I, GEORGE W. BUSH, President of the United States of America, by virtue of the authority vested in me by the Constitution and laws of the United States, do hereby proclaim December 1, 2007, as World AIDS Day. On this day and throughout the year, the red ribbon helps raise awareness of the importance of fighting HIV/AIDS. This year, the White House will display this symbol from the North Portico to represent America's commitment to this struggle. I urge the Governors of the States and the Commonwealth of Puerto Rico, officials of the other territories subject to the jurisdiction of the United States, and the American people to join me in appropriate activities to remember those who have lost their lives to AIDS and to provide support and comfort to those living with this disease.

IN WITNESS WHEREOF, I have hereunto set my hand this twenty-ninth day of November, in the year of our Lord two thousand seven, and of the Independence of the United States of America the two hundred and thirty-second.

[FR Doc. 07–5934
Filed 12–3–07; 8:45 am]
Billing code 3195–01–P

Rules and Regulations

Federal Register
Vol. 72, No. 232
Tuesday, December 4, 2007

This section of the FEDERAL REGISTER contains regulatory documents having general applicability and legal effect, most of which are keyed to and codified in the Code of Federal Regulations, which is published under 50 titles pursuant to 44 U.S.C. 1510.

The Code of Federal Regulations is sold by the Superintendent of Documents. Prices of new books are listed in the first FEDERAL REGISTER issue of each week.

NUCLEAR REGULATORY COMMISSION

10 CFR Chapter I

RIN 3150–AH84

Expanded Definition of Byproduct Material; Notification of Waiver Termination

AGENCY: Nuclear Regulatory Commission.

ACTION: Notice of waiver termination.

SUMMARY: This document announces that on November 30, 2007, in accordance with Section 651(e) of the Energy Policy Act of 2005 and the provisions of the ''Plan for the Transition of Regulatory Authority Resulting from the Expanded Definition of Byproduct Material'' (transition plan) issued by the U.S. Nuclear Regulatory Commission (Commission or NRC) on October 19, 2007 (72 FR 59157), the Commission determined that the States listed below have a program to license byproduct material, as defined in Sections 11e.(3) and (4) of the Atomic Energy Act of 1954, as amended, that is adequate to protect the public health and safety. This determination is based on certifications provided to the Commission by Governors of these States.

Alabama, Arizona, Arkansas, California, Colorado, Florida, Georgia, Iowa, Illinois, Kansas, Kentucky, Louisiana, Massachusetts, Maine, Maryland, Minnesota, Mississippi, Nebraska, Nevada, New Hampshire, New Mexico, New York, North Carolina, North Dakota, Ohio, Oklahoma, Oregon, Rhode Island, South Carolina, Tennessee, Texas, Utah, Washington, and Wisconsin.

In accordance with Section 651(e)(4)(C)(iii) of the Energy Policy Act of 2005, the Agreements entered into between the Commission and each of these States under Section 274b. of the Atomic Energy Act of 1954, as amended, are considered to include byproduct material as defined in Sections 11e.(3) and (4) as of October 19, 2007.

Accordingly, on November 30, 2007, the Commission terminated the time-limited waivers of the Energy Policy Act of 2005 requirements granted by the Commission (70 FR 51581; August 31, 2005) to the each of these States. Users of the newly added byproduct material currently licensed or registered by these States will continue to be subject to the State regulatory authority.

FOR FURTHER INFORMATION CONTACT: Kim K. Lukes, Office of Federal and State Materials and Environmental Management Programs, U.S. Nuclear Regulatory Commission, Washington, DC 20555–0001, telephone (301) 415–6701 or e-mail *kxk2@nrc.gov*.

SUPPLEMENTARY INFORMATION: Copies of the Governors' certifications and the Commission's decision may be reviewed at the NRC Web site *http://www.nrc.gov*.

Dated at Rockville, Maryland, this 28th day of November 2007.

For the Nuclear Regulatory Commission.

Annette L. Vietti-Cook,

Secretary of the Commission.

[FR Doc. E7–23470 Filed 12–3–07; 8:45 am]

BILLING CODE 7590–01–P

NUCLEAR REGULATORY COMMISSION

10 CFR Parts 19, 20, and 50

RIN 3150–AH40

Occupational Dose Records, Labeling Containers, and the Total Effective Dose Equivalent

AGENCY: Nuclear Regulatory Commission.

ACTION: Final rule.

SUMMARY: The Nuclear Regulatory Commission (NRC or Commission) is amending its regulations related to the reporting of annual dose to workers, the definition of *Total Effective Dose Equivalent* (TEDE), the labeling of certain containers holding licensed material, and the determination of cumulative occupational radiation dose. This final rule limits the routine reporting of annual doses to those workers whose annual dose exceeds a specific dose threshold or who request a report. This final rule also modifies the labeling requirements for certain containers holding licensed material within posted areas in nuclear power facilities. This final rule also amends the definition of TEDE to be consistent with current Commission policy. Finally, this rule removes the requirement that licensees attempt to obtain cumulative exposure records for workers unless these individuals are being authorized to receive a planned special exposure. These revisions reduce the administrative and information collection burdens on NRC and Agreement State licensees without affecting the level of protection for either the health and safety of workers and the public, or for the environment.

DATES: *Effective Date:* This final rule is effective on January 3, 2008.

ADDRESSES: Publicly available documents related to this rulemaking may be viewed electronically on the public computers located at the NRC's Public Document Room (PDR), Room O1F21, One White Flint North, 11555 Rockville Pike, Rockville, Maryland. The PDR reproduction contractor will copy documents for a fee.

Publicly available documents created or received at the NRC are available electronically at the NRC's Electronic Reading Room at *http://www.nrc.gov/NRC/reading-rm/adams.html.* From this site, the public can gain entry into the NRC's Agencywide Document Access and Management System (ADAMS), which provides text and image files of NRC's public documents. If you do not have access to ADAMS or if there are problems in accessing the documents located in ADAMS, contact the NRC's PDR Reference staff at (800) 397–4209, (301) 415–4737, or by e-mail to *pdr@nrc.gov.*

FOR FURTHER INFORMATION CONTACT: Stewart Schneider, Office of Nuclear Reactor Regulation, U.S. Nuclear Regulatory Commission, Washington, DC 20555–0001; telephone (301) 415–4123; e-mail *sxs4@nrc.gov.*

SUPPLEMENTARY INFORMATION:

I. Background
II. Discussion
III. Summary and Analysis of Public Comments on the Proposed Rule
IV. Section-by-Section Analysis of Final Revisions
V. Agreement State Compatibility
VI. Availability of Documents
VII. Voluntary Consensus Standards
VIII. Environmental Impact: Categorical Exclusion
IX. Paperwork Reduction Act Statement

X. Regulatory Analysis
XI. Regulatory Flexibility Certification
XII. Backfit Analysis
XIII. Congressional Review Act

I. Background

The NRC Strategic Plan, Fiscal Year 2000–Fiscal Year 2005, included among NRC performance goals for nuclear reactor safety, a performance goal for reducing unnecessary regulatory burden on stakeholders. Similarly, the NRC Strategic Plan Fiscal Year 2004–Fiscal Year 2009 includes as an Effectiveness Strategy improving NRC regulations by adding needed requirements and eliminating unnecessary requirements. The Strategic Plan defines unnecessary regulatory burden as requirements that go beyond what is necessary and sufficient to provide reasonable assurance that the public health and safety, environment, and common defense and security will be protected.

To reduce unnecessary regulatory burden, the NRC issued a proposed rule on September 22, 2006 (71 FR 55382), to revise 10 CFR 19.13, ''Notifications and Reports to Individuals,'' 10 CFR 20.1905, ''Exemptions to Labeling Requirements,'' and 10 CFR 20.2104, ''Determination of Prior Occupational Dose.'' The NRC also proposed to revise the definition of TEDE in 10 CFR 20.1003, ''Definitions,'' and 10 CFR 50.2, ''Definitions,'' to be consistent with current Commission policy.

The NRC received 16 comment letters in response to the proposed rule. The commenters included a number of individuals; industry organizations; and power reactor, uranium recovery, and fuel facility licensees. A discussion of the issues raised by the commenters and the Commission's response is covered below in Section III.

II. Discussion

This final rule includes four principal amendments. These revisions are intended to reduce unnecessary regulatory burden on NRC and Agreement State licensees without affecting the level of protection for either the health and safety of workers and the public, or for the environment. In finalizing this rule, no revisions were made to the regulatory language that was published in the proposed rule (71 FR 55382; September 22, 2006).

A. Annual Dose Report to Workers

The first amendment revises paragraphs (b) and (d) of 10 CFR 19.13 and 10 CFR 20.2205, ''Reports to Individuals of Exceeding Dose Limits.''

Under 10 CFR 19.13(b), licensees must make dose information available to workers as shown in records maintained by the licensees. The final rule revises 10 CFR 19.13(b) so that licensees must provide an annual report to each individual monitored of the dose received in that monitoring year if (1) the individual's occupational dose exceeds 1 millisievert (mSv) (100 millirem (mrem)) TEDE or 1 mSv (100 mrem) to any individual organ or tissue; or (2) the individual requests his or her annual dose report. However, the NRC will not require licensees to provide unsolicited annual dose reports to those individuals whose annual dose does not exceed these limits. The criterion of 1 mSv (100 mrem) applies to the whole body, to any individual organ or tissue, to the lens of the eye, to the skin of the whole body, and to the skin of the extremities. If the dose to any one of these exceeds the criterion during a monitoring year, then the licensee must provide a dose report to the individual for that year.

The criterion of 1 mSv (100 mrem) was selected because it meets the Commission's regulatory objective to provide a significant reduction in administrative and reporting burdens on licensees. In addition, it is consistent with the occupational dose threshold for requiring instruction to workers under 10 CFR 19.12, ''Instruction to Workers.'' As discussed in the Supplementary Information to the proposed rule, recent occupational radiation exposure data submitted to the NRC under 10 CFR 20.2206, ''Reports of Individual Monitoring,'' indicates that about 80 percent of the individuals monitored annually received a TEDE that did not exceed 1 mSv (100 mrem). Based upon this information, the final rule will result in a significant reduction in administrative and reporting burdens on licensees.

The final rule does not change the Commission's requirements in 10 CFR Part 20, ''Standards for Protection Against Radiation,'' for monitoring, recordkeeping, or reporting to the Commission. Therefore, the final rule will not affect the level of protection for either the health and safety of workers and the public or for the environment.

Under the existing regulatory framework, the requirement to inform individuals of their routine annual doses, when determined through the results of individual monitoring and when such a report is provided to the Commission, appears multiple times in the regulations. This requirement appears in 10 CFR 19.13(d) through the reference to 10 CFR 20.2206, ''Reports of Individual Monitoring.'' It also appears in 10 CFR 20.2205 through the reference to 10 CFR 20.2206. To improve regulatory efficiency, this final rule removes the reference to 10 CFR 20.2206 in 10 CFR 19.13(d) and 10 CFR 20.2205, and consolidates the requirement to report annual dose to the individual into a single requirement in 10 CFR 19.13(b).

The NRC will also revise NRC Form 3, ''Notice to Employees,'' to instruct workers on how the licensee is to provide dose annually to workers consistent with the final rule.

B. Definition of Total Effective Dose Equivalent (TEDE)

The second amendment revises the definition of TEDE in 10 CFR 20.1003 and 10 CFR 50.2. Under the final rule, TEDE means the sum of the effective dose equivalent (for external exposures) and the committed effective dose equivalent (for internal exposures). The revised definition of TEDE will allow licensees to substitute ''effective dose equivalent (EDE)'' for ''deep-dose equivalent (DDE)'' for external exposures. Conforming changes are also made to 10 CFR 1201, ''Occupational Dose Limits for Adults.''

This revision will clarify and make the definition of TEDE consistent with Commission policy, as discussed in Regulatory Issue Summary (RIS) 2002–06, ''Evaluating Occupational Dose for Individuals Exposed to NRC-Licensed Material and Medical X-Rays,'' dated April 16, 2002, and subsequently clarified in RIS 2003–04, ''Use of the Effective Dose Equivalent in Place of the Deep Dose Equivalent in Dose Assessments,'' dated February 13, 2003, and RIS 2004–01, ''Method for Estimating Effective Dose Equivalent From External Radiation Sources Using Two Dosimeters,'' dated February 17, 2004. This policy explains that the EDE is the primary quantity in the definition of TEDE for external exposures but that licensees are required to use the DDE in place of the EDE when measuring dose from external exposure, unless the EDE is determined by a dosimetry method approved by the NRC.

In addition, 10 CFR 20.1201, paragraph (c) will be revised to add the requirement that when the external exposure is determined by measurement with an external personal monitoring device, the DDE must be used in place of the EDE, unless the EDE is determined by a dosimetry method approved by the NRC. In many external exposure monitoring situations, determining EDE from external exposures may not be practicable. The added administrative burden associated with determining EDE may not be warranted, or an applicable dosimetry method for determining EDE may not exist. The revised wording to 10 CFR

20.1201(c) clarifies that licensees can still use DDE in place of EDE for the external exposure in demonstrating compliance with the TEDE dose limit, consistent with the existing regulatory framework; however, the DDE must be for the part of the whole body receiving the highest exposure.

The final rule will not affect the level of protection for either the health and safety of workers and the public or for the environment because the revised definition of TEDE does not decrease the ability to determine dose.

The NRC will also revise NRC Form 4, ''Cumulative Occupational Dose History,'' and NRC Form 5, ''Occupational Dose Record for a Monitoring Period,'' so that the licensee can enter either the DDE or EDE in Field 11 which currently is labeled ''Deep Dose Equivalent (DDE).'' In addition, the instruction sheets for completing both forms will be revised to clarify the method to be used to fill in Field 11, ''Deep Dose Equivalent (DDE).'' Until these forms are revised, licensees should enter in Field 11 the EDE from external exposure if this dose is assessed by means other than a single dosimeter worn by the exposed individual. Otherwise, the DDE is to be entered.

C. Labeling Containers

The third amendment revises 10 CFR 20.1905 by adding an exemption for containers holding licensed material (other than sealed sources that are either specifically or generally licensed) within nuclear power facilities licensed under 10 CFR Part 50, ''Domestic Licensing of Production and Utilization Facilities,'' or 10 CFR Part 52, ''Early Site Permits; Standard Design Certifications; and Combined Licenses for Nuclear Power Plants,'' providing certain conditions are met. Licensees of these facilities need not label containers holding licensed material that are within an area posted under 10 CFR 20.1902, ''Posting Requirements,'' if the containers are conspicuously marked (to indicate that they may contain licensed material) commensurate with the radiological hazard and are accessible only to individuals who have sufficient instruction to minimize radiation exposure while handling or working in the vicinity of the containers. However, the final rule does require the containers to be appropriately labeled under the requirements of 10 CFR 20.1904, ''Labeling Containers,'' before being removed from the posted area.

Under the existing regulatory framework, some nuclear power reactor licensees interpreted 10 CFR 20.1904 to mean that they had to label all containers in a posted area, whether they contained licensed material or not, because every container has the potential for internal contamination. This conservative interpretation of the current regulations put an undue burden on these licensees. Thus, the final revision to 10 CFR 20.1905 requires containers to be conspicuously marked commensurate with the radiological hazard. The final rule exempts the licensee from providing detailed labeling information such as the radionuclide or radionuclides present, an estimate of the quantity of radioactivity, the date for which the activity is estimated, radiation levels, types of materials, and mass enrichment as required under 10 CFR 20.1905. One purpose of adding conspicuous markings on the containers is to indicate the potential for generating airborne contamination or high radiation dose rates if the containers were opened or mishandled. For example, these containers could be conspicuously marked by using a color-coding system to indicate high, medium, or low levels of activity or hazard. Containers such as 55-gallon steel drums holding contaminated gloves and booties could be marked with a color that represents low levels of activity or low potential for airborne contamination. At nuclear power facilities, containers located within a posted area are accessible only to individuals who have had instruction under 10 CFR 19.12 and who have been assigned a radiation work permit to control their activities. Consequently, workers will be instructed on the handling of marked containers before workers are given access to these containers.

The container marking system under this rule will reduce licensee administrative and information collection burdens, but serve the same health and safety functions as the current labeling requirements. Therefore, the final rule will not affect the level of protection for either the health and safety of workers and the public or for the environment.

D. Cumulative Occupational Radiation Dose

The fourth amendment removes the provision in 10 CFR 20.2104(a)(2) that requires licensees to attempt to obtain the records of cumulative occupational radiation dose for each worker requiring monitoring under 10 CFR 20.1502, ''Conditions Requiring Individual Monitoring of External and Internal Occupational Dose.'' Since the revision to 10 CFR part 20 (56 FR 23391; May 21, 1991), cumulative lifetime dose is no longer used in Part 20, except for cases involving planned special exposures. That revision made it unnecessary for licensees to attempt to obtain lifetime exposures for workers who are not participating in a planned special exposure program. This issue was discussed further in the Supplementary Information to the proposed rule (71 FR 55382; September 22, 2006).

The final rule does not change the criterion under 10 CFR 20.1206, ''Planned Special Exposures,'' that requires licensees to ascertain the exposure history of an individual's prior lifetime doses as required by 10 CFR 20.2104(b) before permitting an individual to participate in a planned special exposure.

The Commission believes that the final amendment to 10 CFR 20.2104(a)(2) will result in a significant reduction in administrative and information collection burdens on licensees. The final rule will not affect the level of protection for either the health and safety of workers and the public or for the environment, because the requirements to determine an individual's occupational radiation dose received during the current year or cumulative radiation dose prior to permitting a planned special exposure have not been amended.

In 10 CFR 20.2104, paragraphs (c) and (d) will also be revised to correct the omission of a reference to paragraph (b) in this section regarding planned special exposures. Paragraph (b) requires that prior to permitting an individual to participate in a planned special exposure, the licensee must determine the internal and external doses from all previous planned special exposures, and all doses in excess of the limits (including doses received during accidents and emergencies) received during the lifetime of the individual. This revision adds into paragraphs (c) and (d) that licensees obtain complete records of the worker's current and previously accumulated occupational dose in complying with the provisions of 10 CFR 20.2104(b).

III. Summary and Analysis of Public Comments on the Proposed Rule

The NRC received 16 comment letters in response to the proposed rule. The commenters included a number of individuals; industry organizations; and power reactor, uranium recovery, and fuel facility licensees. The majority of commenters supported NRC's approach. The significant comments discussed below are arranged by subject. No changes to the proposed rule language were made as a result of the comment letters.

A. Annual Dose Report to Workers

Ten commenters specifically addressed this issue. All agreed with the concept that there should be a defined dose threshold above which licensees are required to provide an annual dose report to monitored individuals. However, some took issue with the threshold proposed by the NRC.

Comment. Two commenters stated that in order to provide comfort or build trust, more employees are given dosimeters than necessary, and that the effort to provide dosimetry to individuals should not be complicated by a need to provide annual dose reports.

Response. The Commission's requirements on when to provide dosimetry to a worker are separate from the requirements to provide annual dose reports to workers. As explained in the Supplementary Information accompanying the proposed rule, the NRC agrees that many individuals required to be monitored receive very low doses but that, under the current regulations, employers still had to generate and provide reports of doses far below the regulatory limits in 10 CFR 20.1201(a).

Comment. One commenter said that there should be a reporting requirement at the termination of employment or if the employee develops a medical condition which could affect the employee's ability to receive occupational exposure because individuals seeking new employment need to be notified of their dose so that they can inform their new employer.

Response. 10 CFR 19.13(e) currently requires that a licensee provide at the request of a worker who is terminating employment with the licensee, a written report of the radiation dose received by that worker from the operations of the licensee during the current year or fraction thereof. Exposures received as part of medical procedures are not reported to the worker as part of the occupational exposure received at a licensed facility. In the case of a medical condition which could affect the worker's ability to receive occupational exposure, it is the worker's responsibility to notify the licensee of any condition that may interfere with the worker's duties. One example is a woman declaring her pregnancy in order to be exposed to a reduced dose level during the pregnancy. Therefore, the commenter's concerns are addressed by the current regulations.

Comment. One commenter believed that the criteria for reporting annual dose should be based on a percentage of the applicable limits to preserve the graded approach to controlling exposure that the NRC promotes in risk informed regulations, and recommended that licensees should not be required to report occupational doses to workers when their annual dose is less than 10 percent of the applicable dose limits.

Response. The NRC disagrees with basing the criteria on a percentage of the applicable limits. As explained in the Supplementary Information accompanying the proposed rule, the approach used is simpler because there is one reporting threshold instead of three (i.e., the whole body, lens of the eye, and skin of the whole body or skin of any extremity) and results in the same reduction in burden.

Comment. One commenter said that it is not clear why the NRC selected 1 mSv (100 mrem) to be identical with the criterion for requiring instruction to workers under 10 CFR 19.12. This commenter saw no advantage in using the same criterion for notification and instruction. This commenter also took issue with the NRC's position in the Supplementary Information to the proposed rule that raising the threshold from the proposed value of 1 mSv (100 mrem) would not significantly reduce administrative and information collection burdens on licensees. Another commenter believed it to be more logical to use 5 mSv (500 mrem) which is the threshold for requiring individual monitoring of external dose.

Response. The NRC disagrees with these commenters. An analysis of the occupational radiation exposure data in NUREG–0713, Volume 26, (''Occupational Radiation Exposure at Commercial Nuclear Power Reactors and Other Facilities 2004'' December 2005), indicates that about 80 percent (i.e., 94,534 individuals) of the 122,322 monitored individuals received a TEDE that did not exceed 1 mSv (100 mrem). Furthermore, 61,725 of the monitored individuals received no measurable exposure. Therefore, the threshold of 1 mSv (100 mrem) meets the Commission's regulatory objective of providing a significant reduction in administrative and reporting burden on licensees without adversely impacting public health and safety. The analysis also indicates that raising the threshold from 1 mSv (100 mrem) to 5 mSv (500 mrem) would not further reduce significantly administrative and reporting burdens on licensees.

Comment. A commenter objected to using a threshold of 1 mSv (100 mrem) for providing annual dose reports to workers because it results in different requirements for a facility where individuals are monitored and for a facility where individuals are not monitored. The commenter believed that the rule provides a strong incentive for a licensee to cease monitoring workers who might exceed 1 mSv (100 mrem) in a year but are unlikely to exceed 5 mSv (500 mrem), the level of exposure for which licensees are required to provide individual monitoring of external occupational dose under 10 CFR 20.1502.

Response. The NRC disagrees with the commenter's assertion that the threshold for reporting results in different requirements for licensed facilities. The Commission's requirements for recordkeeping and reporting of dose depend only on the licensee's decision to provide or to not provide individual monitoring. The NRC also disagrees with the commenter's assertion that the rule provides incentive for a licensee to cease monitoring workers who might exceed 1 mSv (100 mrem) in a year but are unlikely to exceed 5 mSv (500 mrem). The NRC believes that licensees will choose to continue to provide monitoring to these individuals for operational convenience because this practice helps alleviate worker concerns of a possible significant exposure.

Comment. One commenter recommended allowing licensees to choose a reporting criteria that is either the proposed requirement of 1 mSv (100 mrem) or some optimal intermediate administrative threshold that best relates to the licensee's conditions and practices.

Response. The NRC finds it unacceptable to allow licensees to select the threshold value because it will result in a nonuniform approach to providing reports to individuals.

Comment. One commenter recommended that both the reporting requirements and the monitoring requirements use the same dose criteria so as to not compromise programs for using dosimeters to confirm compliance. This commenter also stated that 1 mSv (100 mrem) per year is below the detection limit for thermoluminescence detectors that are used for dosimeter wear periods that are less than a month.

Response. The NRC disagrees with using the same dose criteria because the requirements for monitoring, recordkeeping, and reporting address different aspects of the licensee's operations. The Commission's requirements for recordkeeping and reporting of dose depend only on the licensee's decision to provide or to not provide individual monitoring.

Regarding the commenter's concern that 1 mSv (100 mrem) per year is below the detection limit for

thermoluminescence detectors, the reporting requirements reflect entries on NRC Form 5, which is the form currently used by licensees to obtain the annual dose information that is reported to the workers. Where monitoring was provided but the dose was not measurable, the licensee can enter ''ND'' for ''Not Detectable'' on NRC Form 5.

Comment. Two commenters stated that the final rule language needs to explicitly state that the reporting threshold applies to the whole body, to the lens of the eye, to the skin of the whole body, and the skin of the extremities.

Response. The NRC believes that the final rule language in 10 CFR 19.13(b) requires no further clarification. Requiring licensees to provide an annual report to each individual when the individual's occupational dose exceeds 1 mSv (100 mrem) TEDE or 1 mSv (100 mrem) to any individual organ or tissue is inclusive of the dose to any part of the body. If any dose value as reported on NRC Form 5 exceeds 1 mSv (100 mrem), then an annual dose report must be provided to the monitored individual. In addition, the revision to the reporting requirements in 10 CFR 19.13(b) does not change the methods for calculating doses to an individual.

Comment. One commenter stated that the Commission should consider a two-tiered threshold: (1) 100 mrem for whole body and lens of the eye, and (2) 1,000 mrem for extremities/organ, because there is a 10-fold difference in the dose limits involved. The commenter also believed that this approach would result in major administrative savings for medical and research workers.

Response. The NRC disagrees with this comment. Several approaches were evaluated for establishing a threshold value above which licensees are required to provide an annual dose report to a monitored individual. The approach selected for the final rule has the merit of simplicity while also achieving the intended aim of reducing unnecessary regulatory burden. The regulatory analysis conducted for the final rule (Section X, below) shows that the 1 mSv (100 mrem) annual reporting threshold by itself results in a significant burden reduction for licensees as a whole.

B. Definition of Total Effective Dose Equivalent (TEDE)

Five commenters specifically addressed this issue. Most of these commenters agreed with the proposed revision to the definition of TEDE in 10 CFR 20.1003 and 10 CFR 50.2.

Comment. One commenter stated that the NRC has no basis to approve dosimetry methods for determining the effective dose equivalent and recommended allowing use of the effective dose equivalent when the methodology is in accordance with a nationally recognized standard or the radiation control agency with jurisdiction.

Response. The NRC disagrees that there is no basis to approve dosimetry methods, and has published guidance on acceptable dosimetry methods in RIS 2004–01, ''Method for Estimating Effective Dose Equivalent From External Radiation Sources Using Two Dosimeters,'' RIS 2003–04, ''Use of the Effective Dose Equivalent in Place of the Deep Dose Equivalent in Dose Assessments,'' and RIS 2002–06, ''Evaluating Occupational Dose for Individuals Exposed to NRC-Licensed Material and Medical X-Rays.'' Further guidance will be provided, as warranted, when additional methods are determined acceptable by the NRC.

Comment. One commenter said that the Supplementary Information to the proposed rule did not address how the change to the definition of TEDE is consistent with the recommendations of the International Commission on Radiological Protection (ICRP) and the National Council on Radiation Protection and Measurements (NCRP).

Response. Total Effective Dose Equivalent (TEDE) in 10 CFR Part 20 is defined as the sum of two dosimetrically different quantities: The deep-dose equivalent (DDE) for external exposure and the effective dose equivalent (EDE) for internal exposure. This approach is not consistent with the basic radiation protection premise that risk is directly proportional to dose. The DDE is not, in many cases, proportional to risk and is often a poor indicator of the risk arising from radiation exposure. This approach of using mixed quantities to define the TEDE is also not consistent with the recommendations of national and international advisory groups such as the NCRP and the ICRP. These groups quantify the total dose by adding the EDEs for both internal and external exposures. The use of mixed quantities has caused significant difficulties to NRC licensees, and has led the Commission to permit substitution of EDE in place of DDE when calculating the TEDE, provided the dose from external exposure is not based on measurements using personnel dosimetry. This provision allows for the fact that the EDE cannot be measured in the field, and when measurements are necessary as the basis for quantifying the dose from external exposures, the DDE may be used as a surrogate quantity that was defined in such a manner that its magnitude provides a conservative numerical estimate for the EDE. The final redefinition of TEDE implements this policy formally, a policy that is now in effect and is being used by NRC licensees.

Comment. One commenter stated that NRC Forms 4 and 5 need to be revised because of the change to the definition of TEDE, and that the NRC provide options in guidance for reporting EDE versus DDE and for making appropriate calculations of the total organ dose equivalent and TEDE.

Response. The NRC agrees with the comment. NRC Forms 4 and 5 will be revised to reflect the changes to the definition of TEDE. In addition, the instruction sheets for completing both forms will be revised to clarify the method to be used to fill in Field 11, ''Deep Dose Equivalent (DDE).'' Guidance for estimating the EDE and DDE is provided in numerous NRC guidance documents.

C. Labeling Containers

Four commenters specifically addressed this issue. All of the commenters disagreed with the approach taken by the NRC in the proposed rule to limit the exemption to labeling requirements under 10 CFR 20.1905 to nuclear power reactor licensees, and believed that additional categories of licensees should be granted the exemption to labeling requirements for containers holding licensed material.

Comment. Two commenters stated that the container labeling exemption should be granted to university and medical licensees. One commenter indicated that power reactors have more types of radioactivity and a great range of activity because of the mixtures of fission and activation products, while university and medical areas have pure and well-defined materials used under controlled conditions, mostly employing low quantities of materials with short half lives. The commenter indicated that therefore a dichotomy in the rules for nuclear power plants and other licensees is unjustified. The other commenter stated that the current exemptions in 10 CFR 20.1905 pertain to labeling of containers with applicability to all licensees, and that limiting this exemption to nuclear power facilities for the reasons stated in the Supplementary Information to the proposed rule demonstrates an incomplete understanding of the safety measures in large medical and research facilities. The commenter stated if an undue burden has been placed on the nuclear power industry because of an overly conservative interpretation of the rules, the NRC should specifically be

tasked to broaden that interpretation, not exempt a single licensee category from a rule applicable to all other licensees.

Response. The NRC disagrees with granting the exemption from labeling requirements to university and medical licensees. The burden imposed on nuclear power plant licensees by the current regulation is due to an overly conservative interpretation because of the existence of a large number of structures in a protected area of a nuclear power plant that may be inappropriately considered to be containers holding licensed material, such as cable trays, and containers holding contaminated tools or protective clothing. This situation does not exist at other types of licensed facilities. In addition, although the NRC agrees with the commenter that university and medical licensees implement stringent radiation control programs, the level of redundancy in protective measures in these programs is not as extensive as that found at nuclear power plants. The NRC believes that removing one such measure at nuclear power plants, i.e., labeling containers holding licensed material, will be compensated for by the redundancy in their radiation protection programs. Such extensive redundancy is not normally found in university and medical radiation protection programs.

Comment. Two commenters recommended that the container labeling exemption be granted to all licensees under 10 CFR part 70, ''Domestic Licensing of Special Nuclear Material.'' One of these commenters believed that all Part 70 licensees now have this provision in their licenses. This commenter also noted that a Part 70 licensee's variance in radiological hazards is comparable to that of a Part 50 or Part 52 license.

Response. The NRC disagrees that there is a need to extend the exemption from labeling requirements to include Part 70 licensees. Currently, only Part 70 licensees subject to Subpart H requirements have a license condition that provides the exemption from the labeling requirements of this rule. The Commission has determined that for the remainder of the Part 70 licensees, this license condition is not required. The existing labeling requirements are not a burden to these licensees because they handle few containers holding radioactive material.

Comment. One commenter suggested that the exemption be expanded to include containers removed from a posted area as long as the container is under continuous direct or electronic surveillance while in transit between one posted area to another.

Response. The exemption from labeling requirements suggested by the commenter is already provided in 10 CFR 20.1905(c). That regulation specifies that a licensee is not required to label containers attended by an individual who takes the precautions necessary to prevent the exposure of individuals in excess of the limits established by 10 CFR Part 20.

D. Cumulative Occupational Radiation Dose

Ten commenters addressed this issue. Most of the commenters agreed with removing the provision in 10 CFR 20.2104(a)(2) that requires licensees to attempt to obtain the records of cumulative occupational radiation dose for each worker requiring monitoring under 10 CFR 20.1502.

Comment. Two commenters suggested that the cost savings to licensees from the revision to 10 CFR 20.2104 have been underestimated. Specifically, these commenters recommended that the NRC consider the savings to those licensees who will no longer have to provide prior dose records to a requesting licensee, stating that the savings of not having to provide prior dose records is $20 per new employee. This estimate is based on an assumption of a savings of $10 per request and on the fact that two licensees would be requested to provide the records per new employee.

Response. The NRC agrees with the comments and the regulatory analysis for the final rule found in Section X has been revised to use the suggested values.

Comment. One commenter expressed a concern that it is essential for the licensee to obtain current year dose records.

Response. The NRC agrees with the need for a licensee to determine and record the dose for an individual during the current year. The final rule does not revise the requirements in 10 CFR 20.2104(a) that require a licensee to determine the occupational radiation dose received by an individual during the current year. The final rule removes only the requirement that licensees attempt to obtain cumulative exposure records for workers, i.e., exposure records for previous years, unless these individuals are being authorized to receive a planned special exposure.

Comment. One commenter suggested that an additional revision be made to 10 CFR 19.13 to remove the language in paragraph (a) regarding using an individual's social security number as an appropriate identifier for reports. This commenter was concerned about the risk of identity theft.

Response. Based on recent Office of Management and Budget guidance, Federal agencies, including the NRC, are reviewing their uses of Social Security Numbers (SSNs) with the goal of eliminating unnecessary uses of SSNs. However, revision of 10 CFR 19.13(a) to remove the language specific to using the individual's social security number as an identifier is outside the scope of this rulemaking.

Comment. One commenter believed that removing the requirement in 10 CFR 20.2104(a)(2) to attempt to obtain the records of cumulative occupational radiation dose would eliminate lifetime dose records and the ability to do any retrospective, low dose occupational risk assessments.

Response. As explained in the Supplementary Information accompanying the proposed rule, occupational exposures were initially restricted by the cumulative lifetime dose received and, under certain circumstances, an individual could receive as much as 0.12 Sv (12 rems) in a year. However, following revision to 10 CFR Part 20 (56 FR 23391; May 21, 1991), cumulative lifetime dose is no longer used in the Commission's regulations to restrict occupational exposures. The reduced occupational dose limit of 0.05 Sv (5 rems) per year in the current 10 CFR 20.1201(a)(1)(i) essentially accomplishes the same goal as the previous dose limit of 0.03 Sv (3 rems) per calendar quarter constrained by the then age-dependent, cumulative lifetime dose limit. (The goal is an average cumulative dose rate of 0.05 Sv (5 rems) per year to the individual.) Therefore, it is no longer necessary for licensees to obtain records of cumulative occupational dose. However, 10 CFR Part 20 still requires licensees to maintain records of individual monitoring results and to submit to the NRC an annual report of the results of individual monitoring. The ability to do a retrospective dose assessment is not affected by this final rule. The revision to 10 CFR 20.2104(a)(2) does not change the Commission's requirements for monitoring individuals or for maintaining records of doses received by individuals at licensed facilities. Thus, the dose records for individuals whose exposure histories span more than one licensed facility will still be available for risk assessments.

Comment. One commenter stated that removing the requirement in 10 CFR 20.2104(a)(2) will not reduce future burden on licensees because if the NRC implements the proposed International

Commission on Radiological Protection (ICRP) recommendation on dose limits averaged over several years, then licensees will need to reconstruct a worker's prior dose records.

Response. A change in this area would not affect the ability of licensees to implement dose averaging if the Commission were to decide to adopt this practice in the future. The revision does not remove the requirement to record and report the doses received by monitored workers, rather, it simply removes the requirements for each licensee to compile the exposure history of each worker as recorded on FORM 5s unless the worker is being authorized to receive a planned special exposure. Should another purpose develop (such as dose averaging) that would justify such data compilation, it would be as easy to do as for a planned special exposure, because the records would still be available.

Comment. One commenter stated that the rule should be expanded to not require a licensee to obtain a worker's dose records prior to permitting the worker to participate in a planned special exposure, but to require the worker to retrieve this data. The commenter believed that this would alleviate an administrative burden on the licensee.

Response. This comment is outside the scope of this rulemaking. The final rule does not address the methods used to obtain a worker's dose history when that dose history is required prior to permitting the worker to participate in a planned special exposure. The final rule only removes the requirement for a licensee to obtain the records of cumulative occupational radiation dose except when authorizing a planned special exposure.

IV. Section-by-Section Analysis of Final Revisions

This final rule amends 10 CFR 19.13, 20.1003, 20.1201, 20.1905, 20.2104, 20.2205, and 50.2.

Section 19.13—Notifications and Reports to Individuals.

Paragraph (b) is revised to require a licensee to provide an annual dose report to an individual when the individual's occupational dose exceeds 1 mSv (100 mrem) TEDE or 1 mSv (100 mrem) to any individual organ or tissue, or when the individual requests a report of the individual's annual dose, and that all dose records shall be made available to workers onsite.

In order to consolidate the requirement to report annual dose to the individual into a single requirement in 10 CFR 19.13(b), paragraph (d) is revised to remove the reference to 10 CFR 20.2206.

Section 20.1003—Definitions.

In 10 CFR 20.1003, the definition of *Total Effective Dose Equivalent* (TEDE) is revised to state that TEDE is the sum of the effective dose equivalent (for external exposures) and the committed effective dose equivalent (for internal exposures).

Section 20.1201—Occupational Dose Limits for Adults.

Paragraph (c) is revised to add the requirement that when the external exposure is determined by measurement with an external personal monitoring device, the deep-dose equivalent must be used in place of the effective dose equivalent, unless the effective dose equivalent is determined by a dosimetry method approved by the NRC.

Section 20.1905—Exemptions to Labeling Requirements.

A new paragraph (g) is added to 10 CFR 20.1905 to provide an exemption for containers holding licensed material (other than sealed sources that are either specifically or generally licensed) that are in an area posted under the requirements of 10 CFR 20.1902 at a nuclear power facility. The final rule does not require the licensee to label the container according to 10 CFR 20.1904 if it is conspicuously marked (such as by color coding) commensurate with the radiological hazard and accessible only to individuals who have sufficient instruction to minimize radiation exposure while handling or working in the vicinity of the containers. The final rule also requires that the container must be appropriately labeled as required by 10 CFR 20.1904 before being removed from the posted area. This exemption to the labeling requirements for containers holding licensed material does not apply to non-power reactor and materials licensees, or for sealed sources.

Section 20.2104—Determination of Prior Occupational Dose.

Paragraph (a)(2) is removed to delete the requirement that licensees attempt to obtain the records of cumulative occupational radiation dose. The introductory text of paragraph (a) and paragraph (a)(1) are combined and designated as paragraph (a). Paragraphs (c) and (d) are also revised to add a reference to paragraph (b) in this section regarding planned special exposures.

Section 20.2205—Reports to Individuals of Exceeding Dose Limits.

Section 20.2205 is revised to remove the reference to 10 CFR 20.2206, in order to consolidate the requirement to report annual dose to the individual into a single requirement in 10 CFR 19.13(b).

Section 50.2—Definitions.

In 10 CFR 20.1003, the definition of *Total Effective Dose Equivalent* (TEDE) is revised to state that TEDE is the sum of the effective dose equivalent (for external exposures) and the committed effective dose equivalent (for internal exposures).

V. Agreement State Compatibility

Under the ''Policy Statement on Adequacy and Compatibility of Agreement State Programs,'' approved by the Commission on June 30, 1997, and published in the **Federal Register** (62 FR 46517; September 3, 1997), this rule is a matter of compatibility between NRC and the Agreement States, thereby providing consistency among the Agreement States and the NRC's requirements. The NRC analyzed the rule in accordance with the procedure established in Part III, ''Categorization Process for NRC Program Elements,'' of Handbook 5.9 to Management Directive 5.9, ''Adequacy and Compatibility of Agreement State Programs'' (which may be viewed at *http://nrc-stp.ornl.gov/*). The NRC has determined that the compatibility categories for the sections amended in this rule are the same as for the sections in the existing regulations, except for the new exemption (g) added to 10 CFR 20.1905.

The revisions to 10 CFR 19.13 and 20.2205 are classified as Compatibility Category C. A Compatibility Category C designation means the Agreement State should adopt the essential objectives of the requirement to avoid conflicts, duplications, or gaps.

The revisions to 10 CFR 20.1003 and 20.1201(c) are classified as Compatibility Category A. A Compatibility Category A designation means the requirement is a basic radiation protection standard or related definition, sign, label, or term necessary for a common understanding of radiation protection principles. Agreement State requirements designated Compatibility Category A should be essentially identical to NRC requirements.

The new exemption (g) added to 10 CFR 20.1905 is classified as Compatibility Category NRC. A Compatibility Category NRC designation means the Agreement State should not

adopt the requirement for purposes of compatibility. These are NRC program elements that address regulatory items that cannot be relinquished to Agreement States under the Atomic Energy Act or provisions of the regulations in title 10 of the CFR.

The revision to 10 CFR 20.2104(a) is classified as Compatibility Category D. A Compatibility Category D designation means the Agreement State is not required to adopt the requirement for compatibility.

VI. Availability of Documents

The NRC is making the documents identified below available to interested persons through one or more of the following methods.

Public Document Room (PDR). The NRC Public Document Room is located at 11555 Rockville Pike, Rockville, Maryland.

NRC's Agency-wide Documents Access and Management System (ADAMS). The NRC's PARS Library is located at *www.nrc.gov/reading-rm/adams.html*.

The NRC staff contact (NRC Staff). Stewart Schneider, U.S. Nuclear Regulatory Commission, Mail Stop O–12D3, Washington, DC 20555–0001; telephone (301) 415–4123; *sxs4@nrc.gov*.

Document	PDR	ADAMS	NRC staff
Final Rulemaking	X	X	X
Public Comments on Proposed Rule	X	X	X
Proposed Rulemaking (71 FR 55382; September 22, 2006)	X	X	X
NRC Form 3	X	X	X
NRC Form 4	X	X	X
NRC Form 5	X	X	X
RIS 2002–06	X	X	X
RIS 2003–04	X	X	X
RIS 2004–01	X	X	X
NUREG–0713, Vol. 26	X		X
NUREG–1350, Vol. 17	X		X
NUREG/BR–0184	X		X
NUREG/BR–0058, Rev. 4	X		X
Standards for Protection Against Radiation: Final Rule (56 FR 23391; May 21, 1991)	X	X	
NRC Strategic Plan, Fiscal Year 2000–Fiscal Year 2005	X	X	X

Copies of NUREGs may be purchased from The Superintendent of Documents, U.S. Government Printing Office, Mail Stop SSOP, Washington, DC 20402–0001; Internet: *bookstore.gpo.gov*; (202) 512–1800. Copies are also available from the National Technical Information Service, Springfield, VA 22161–0002; *http://www.ntis.gov*; 1–800–553–6847 or, locally, (703) 605–6000. Some publications in the NUREG series are included in the document collections in the Electronic Reading Room on NRC's Web site at *http://www.nrc.gov/reading-rm.html*.

VII. Voluntary Consensus Standards

The National Technology Transfer and Advancement Act of 1995, Pub. L. 104–113, requires that Federal agencies use technical standards that are developed or adopted by voluntary consensus standards bodies unless using such a standard is inconsistent with applicable law or is otherwise impractical. In this final rule, the NRC is revising requirements for the reporting of annual dose to workers, the definition of *Total Effective Dose Equivalent* (TEDE), the labeling of certain containers holding licensed material, and the determination of cumulative occupational radiation dose. This regulatory action does not constitute the establishment of a standard that contains generally applicable requirements.

VIII. Environmental Impact: Categorical Exclusion

The NRC has determined that the amendments to 10 CFR parts 19, 20, and 50 are the types of actions described in categorical exclusion 10 CFR 51.22(c). Therefore, neither an environmental impact statement nor an environmental assessment has been prepared for this regulatory action. Specifically, the revision to 10 CFR 19.13(b) to limit the routine reporting of annual doses to workers comes under the categorical exclusion in 10 CFR 51.22(c)(1), which covers all revisions to 10 CFR part 19. The amendments to the definition of TEDE in 10 CFR 20.1003 and 10 CFR 50.2 and to 10 CFR 20.1201(c) to add the requirement that the effective dose equivalent be determined by a dosimetry method approved by the NRC come under the categorical exclusion in 10 CFR 51.22(c)(2) because these revisions are of a minor nature and do not substantially modify existing regulations. For the amendments to 10 CFR 20.1905 to revise the requirements for labeling containers and to 10 CFR 20.2104 to remove the requirement to obtain lifetime exposure records, these revisions involve recordkeeping requirements and thus come under the categorical exclusion in 10 CFR 51.22(c)(3)(ii). Finally, because the amendment to 10 CFR 20.2205 involves a reporting requirement, this revision comes under the categorical exclusion in 10 CFR 51.22(c)(3)(iii).

IX. Paperwork Reduction Act Statement

This final rule amends information collection requirements contained in 10 CFR Parts 19, 20, and 50, and NRC Form 4 that are subject to the Paperwork Reduction Act of 1995 (44 U.S.C. 3501 et seq.). These requirements were approved by the Office of Management and Budget, approval numbers 3150–0044, 3150–0014, 3150–0011, and 3150–0005. The changes to 10 CFR Parts 19, 20, and 50, and NRC Form 4 do not contain a new or amended information collection requirements. Existing requirements were approved by the Office of Management and Budget, approval number(s) 3150–0044, 3150–0014, 3150–0011, and 3150–0005.

Because the rule will reduce the burden for existing information collection requirements, the public burden for the information collections in 10 CFR parts 19 and NRC Form 4 is expected to be decreased by 235 and 44 hours per licensee, respectively. This reduction includes the time required for reviewing instructions, searching existing data sources, gathering and maintaining the data needed and completing and reviewing the information collection. Send comments on any aspect of these information collections, including suggestions for further reducing the burden, to the Records and FOIA/Privacy Services Branch (T–5 F52), U.S. Nuclear Regulatory Commission, Washington,

DC 20555–0001, or by Internet electronic mail to *INFOCOLLECTS@NRC.GOV*; and to the Desk Officer, Office of Information and Regulatory Affairs, NEOB–10202, (3150–0044, 3150–0014, 3150–0011, and 3150–0005) Office of Management and Budget, Washington, DC 20503.

Public Protection Notification

The NRC may not conduct or sponsor, and a person is not required to respond to, a request for information or an information collection requirement unless the requesting document displays a currently valid OMB control number.

X. Regulatory Analysis

The Commission has prepared a regulatory analysis on this final rule and has included it in this **Federal Register** notice. The analysis examines the costs and benefits of the alternatives considered by the Commission. The Commission requested public comment on the draft regulatory analysis for the proposed rule (71 FR 55382; September 22, 2006). Two comments were received on the draft regulatory analysis and are discussed above in Section III. These comments were considered and the regulatory analysis revised appropriately.

1. Statement of the Problem and Objective

The NRC has determined that the regulations in 10 CFR 19.13, 20.1003, 20.1201, 20.1905, 20.2104, and 50.2 impose an undue regulatory burden on licensees. The final rule makes these regulations consistent with current Commission policy and reduces administrative and information collection burdens on NRC and Agreement State licensees. The final rule amends certain requirements for notification of workers, revises the definition of *Total Effective Dose Equivalent* (TEDE), amends certain container labeling requirements, and removes the requirement that licensees attempt to obtain the records of cumulative occupational radiation dose for certain individuals. These revisions do not affect the level of protection for either the health and safety of workers and the public or for the environment.

2. Identification of Regulatory Alternatives

This regulatory analysis evaluates the savings and costs of two regulatory alternatives. The following subsections describe these two alternatives.

2.1 No-Action Alternative

The no-action alternative is the status quo had this rule not been promulgated. Under that alternative, licensees would have been required to: (1) Provide annual dose reports to all monitored individuals, (2) determine the TEDE by summing the deep-dose equivalent (for external exposures) and the committed effective dose equivalent (for external doses), (3) use the current exemptions to labeling requirements for containers holding licensed material, and (4) attempt to obtain the records of lifetime occupational radiation dose for all individuals. The no-action alternative is the baseline for analyzing the rule alternative. The no-action alternative does not accomplish the stated objective.

2.2 Rule Alternative

Under the rule alternative, the NRC is revising its regulations in 10 CFR parts 19, 20, and 50 for: (1) Reporting dose to workers, (2) the definition of TEDE, (3) the labeling of certain containers holding licensed material, and (4) the requirement that licensees attempt to obtain the records of cumulative occupational radiation dose for all individuals. This alternative makes the regulations consistent with current Commission policy and reduces administrative and information collection burdens on NRC and Agreement State licensees. Because this action is being taken to ease burden, the rulemaking process is the only regulatory option appropriate to make the changes effective.

3. Analysis of Values and Impacts

3.1 Identification of Affected Attributes

The attributes that the rule could affect were identified by using the list of potential attributes provided in Chapter 5 of NUREG/BR–0184, ''Regulatory Analysis Technical Evaluation Handbook'' (January 1997).

Industry Implementation. This attribute is affected by three of the four principal revisions: The revisions to the requirements for the annual dose reports to workers, the labeling of containers holding licensed material, and the attempt to obtain the records of cumulative occupational radiation dose for an individual. In implementing these changes, licensees will incur the costs of revising procedures.

Industry Operation. This attribute is affected by three of the four principal revisions. Licensees will realize savings by only having to provide annual dose reports to individuals when their dose exceeds 1 mSv (100 mrem), by not having to label containers holding licensed material (except sealed sources that are already labeled) in a posted area in a nuclear power facility, and by not having to ascertain the exposure history of an individual's prior lifetime doses except to permit an individual to participate in a planned special exposure.

NRC Implementation. The NRC will incur costs to make minor revisions to NRC Form 3, ''Notice to Employees,'' to account for the revisions to the reporting of annual dose to workers. In addition, the NRC will incur costs to make minor revisions to NRC Form 4, ''Cumulative Occupational Dose History,'' and NRC Form 5, ''Occupational Dose Record for a Monitoring Period,'' and their instructions, to account for the revision to the definition of TEDE.

Regulatory Efficiency. All four of the principal revisions will enhance regulatory efficiency. The revisions are intended to reduce administrative and information collection burdens on NRC and Agreement State licensees without affecting the level of protection for either the health and safety of workers and the public or for the environment.

3.2 Methodology

The incremental savings and costs of the regulatory action are analyzed relative to the baseline described in Section 2.1 of this regulatory analysis. The savings come from any desirable changes in the affected attributes, while the costs come from any undesirable changes in the affected attributes.

Under Office of Management and Budget guidance and NUREG/BR–0058, ''Regulatory Analysis Guidelines of the U.S. Nuclear Regulatory Commission,'' Revision 4 (September 2004), the results of the analysis are presented using a discounted flow of funds at a 3 and 7 percent real discount rate.

Under 10 CFR 20.2206, seven categories of NRC licensees are required to submit to the NRC annual radiation exposure reports for monitored individuals: Commercial nuclear power reactors; industrial radiographers; fuel processors (including uranium enrichment), fabricators and reprocessors; manufacturers and distributors of byproduct material; independent spent fuel storage installations; facilities for land disposal of low-level waste; and geologic repositories for high-level waste. (No NRC licensees are currently involved in operating low-level waste disposal facilities or geologic repositories for high-level waste.) In addition, 10 CFR 20.2206(b) requires that licensees submit annual reports using NRC Form

5 or electronic media containing all the information required by NRC Form 5. For the above licensees, the value-impact analysis uses the occupational exposure data maintained in the NRC's Radiation Exposure Information and Reporting System (REIRS) database (NUREG–0713, Volume 26, ''Occupational Radiation Exposure at Commercial Nuclear Power Reactors and Other Facilities 2004'' (December 2005)). While more recent data has been issued, the values have not changed significantly from those used in the regulatory analysis for the proposed rule. To simplify the analysis, the seven categories of licensees are consolidated into two groups. The first group contains only commercial nuclear power reactor licensees (nuclear power reactor licensees) and the second group contains all of the other licensee categories listed above (REIRS materials licensees).

The seven categories of licensees specified in 10 CFR 20.2206 do not include all NRC licensees. Most NRC licensees (e.g., hospitals, medical facilities, universities, radiological services, disposal) are not required to submit annual radiation exposure reports for monitored individuals. These licensees (non-REIRS materials licensees) constitute the third group of licensees for whom a value-impact analysis was done. This group contains both Agreement State and NRC licensees. For this group of licensees, the NRC has no records of the number of monitored individuals or the annual doses they received (except in the rare case of an overexposure). Based on professional judgment, the NRC assumes that 500,000 individuals are monitored annually by non-REIRS materials licensees. In addition, it is assumed that about 70 percent of them receive an annual dose that does not exceed 1 mSv (100 mrem). This factor is derived from the data in NUREG–0713 for REIRS materials licensees and is assumed to apply to non-REIRS materials licensees.

The following assumptions and data were used to assess the incremental values and impacts associated with the regulatory action.

- Based on NUREG–0713, the number of nuclear power reactor licensees is 104 (NRC licensees only).
- Based on NUREG–0713, the number of REIRS materials licensees is 123 (NRC licensees only).
- Based on NUREG–1350, Volume 17, ''NRC Information Digest: 2005–2006 Edition'' (July 2005), there are approximately 17,298 Agreement State licensees. While more recent data has been issued, the values have not changed significantly from those used in the regulatory analysis for the proposed rule.
- The number of non-REIRS materials licensees (Agreement State and NRC licensees) was estimated as follows. A review of the NRC Licensing Tracking System database in October 2005 indicated that a total of 4,517 materials licensees are administered by the NRC. While more recent data has been issued, the values have not changed significantly from those used in the regulatory analysis for the proposed rule. Correcting for the 123 REIRS materials licensees in the database and accounting for Agreement State licensees, the total number of Agreement State and NRC licensees designated as non-REIRS materials licensees is approximately 21,692 licensees (17,298 Agreement State licensees + 4,517 NRC materials licensees − 123 REIRS materials licensees).
- The number of NRC licensees designated as non-REIRS materials licensees is 4,394 licensees (4,517 NRC materials licensees − 123 REIRS materials licensees).
- Based on NUREG–0713, the number of individuals working for all nuclear power reactor licensees is 110,290.
- The average number of individuals working at each of the 104 nuclear power plants is estimated to be 1,060.
- Based on NUREG–0713, the number of individuals working for all REIRS materials licensees is 12,032.
- Based on professional judgment, the NRC assumes that 500,000 individuals are monitored annually by non-REIRS materials licensees (Agreement State and NRC licensees).
- Based on NUREG–0713, 70 percent of the individuals monitored by nuclear power reactor licensees receive an annual dose that does not exceed 1 mSv (100 mrem).
- Based on NUREG–0713, 80 percent of the individuals monitored by REIRS materials licensees receive an annual dose that does not exceed 1 mSv (100 mrem).
- Based on NUREG–0713 and professional judgment, the NRC assumes that 80 percent of the individuals monitored by non-REIRS materials licensees receive an annual dose that does not exceed 1 mSv (100 mrem).
- The NRC estimates that procedural revisions will require 20 hours for each of the 104 nuclear power plants.
- For REIRS and non-REIRS materials licensees, the time needed to revise procedures ranges from 2 to 20 hours, depending on the size of the facility. This analysis uses 10 hours as the average time to revise procedures for these licensees.
- For nuclear power reactor licensees, it is assumed that the average life remaining for power reactor facilities is 49 years. For 3 and 7 percent real discount rates, the analysis uses present value multiplication factors of 25.50 and 13.77, respectively, following the guidance in NUREG/BR–0184.
- For REIRS and non-REIRS materials licensees, it is assumed that the average life remaining for the facilities is 20 years. For 3 and 7 percent real discount rates, the analysis uses factors of 14.9 and 10.6, respectively, following the guidance in NUREG/BR–0184.

3.3 Analysis

3.3.1 Annual Dose Report to Workers

Nuclear power reactor licensees.

In implementing the regulatory action, nuclear power reactor licensees will incur a one-time cost to revise procedures. The NRC estimates it will take 20 hours to revise the procedures for each of the 104 nuclear power plants. Assuming a staff rate of $105 per hour, the one-time cost of implementing the regulatory action will be $2,100 per nuclear power plant (20 hours × $105/hour) and $220,000 for the nuclear power industry (104 licensees × $2,100/licensee).

With respect to industry operation, there will be a savings from not having to provide unsolicited annual dose reports (NRC Form 5) to workers when their doses do not exceed 1 mSv (100 mrem). As discussed in the regulatory analysis for the proposed rule (71 FR 55382; September 22, 2006), the NRC estimated the annual savings to be $3,000 per nuclear power plant and $310,000 for the nuclear power industry ($3,000 × 104 licensees). For a flow of funds at a 3 percent real discount rate, the estimated savings per nuclear power plant and for the nuclear power industry are $77,000 ($3,000 × 25.50) and $8 million ($310,000 × 25.50), respectively. For a flow of funds at a 7 percent real discount rate, the estimated savings per nuclear power plant and for the nuclear power industry are $41,000 ($3,000 × 13.77) and $4.3 million ($310,000 × 13.77), respectively.

In order to provide an estimate of the ''hourly'' burden reduction, the NRC performed the following analysis. The NRC estimates it will take 5 minutes (0.083 hour) for a licensee to prepare an annual dose report for each worker. Using the 2004 data in NUREG–0713, it was determined that about 80 percent of the monitored individuals had an annual dose that did not exceed 1 mSv (100 mrem). It is further assumed that

90 percent of this population will not request an annual dose report. Assuming an average of 1,060 workers per nuclear power plant, the annual burden reduction from implementing the regulatory action is estimated to be 63 hours per nuclear power plant (1,060 workers × 0.083 hour × 0.8 × 0.9) and the total annual industry burden reduction is 6,600 hours (63 hours/licensee × 104 licensees).

REIRS materials licensees.

In implementing the regulatory action, REIRS materials licensees will incur a one-time cost to revise procedures. The NRC estimates it will take 10 hours to revise the procedures for each of the 123 REIRS materials licensees. Assuming a staff rate of $105 per hour, the one-time cost of implementing the regulatory action will be $1,050 per licensee (10 hours × $105/hour) and $130,000 for all licensees in this category (123 licensees × $1,050/licensee).

With respect to industry operation, using the 2004 data in NUREG–0713, it was determined that 8,254 workers (about 70 percent of the monitored individuals) had an annual dose that did not exceed 1 mSv (100 mrem). Assuming these workers are equally distributed among the 123 licensees in this group, about 67 workers per licensee will not receive an annual dose report. It is further assumed that 90 percent of this population will not request an annual dose report (NRC Form 5). The NRC estimates a savings of $10 per worker not receiving a dose report. Thus, the estimated annual savings is $600 per licensee (67 workers/licensee × $10/worker × 0.9) and $74,000 for all licensees in this category ($600/licensee × 123 licensees). For a flow of funds at a 3 percent real discount rate, the estimated savings per licensee and for all licensees in this category are $9,000 ($600 × 14.9) and $1.1 million ($74,000 × 14.9), respectively. For a flow of funds at a 7 percent real discount rate, the estimated savings per licensee and for all licensees in this category are $7,000 ($670 × 10.6) and $780,000 ($74,000 × 10.6), respectively.

In order to provide an estimate of the ''hourly'' burden reduction, the NRC performed the following analysis. The NRC estimates it will take 5 minutes (0.083 hour) for a licensee to prepare an annual dose report for each worker. Assuming that 90 percent of the 67 workers per licensee will not request a dose report, the annual burden reduction from implementing the regulatory action is estimated to be 5 hours per licensee (67 workers × 0.083 hour × 0.9) and 620 hours for all licensees in this category (5 hours/licensee × 123 licensees).

Non-REIRS materials licensees.

In implementing the regulatory action, non-REIRS materials licensees will incur a one-time cost to revise procedures. The NRC estimates it will take 10 hours to revise the procedures for each of the 21,692 non-REIRS materials licensees. Assuming a staff rate of $105 per hour, the one-time cost of implementing the regulatory action will be $1,050 per licensee (10 hours × $105/hour) and $23 million for all licensees in this category (21,692 licensees × $1,050/licensee).

With respect to industry operation, the NRC assumes 500,000 monitored workers, 21,692 non-REIRS licensees, 23 workers per licensee, and a savings of $10 for each worker who does not receive a dose report. In addition, the previously defined factor of 70 percent for REIRS materials licensees is used to estimate the fraction of workers who will not receive an annual dose report (NRC Form 5). Thus, 16 workers per licensee are assumed to not receive an annual dose report. It is further assumed that 90 percent of this population will not request an annual dose report. The estimated annual savings is $140 per licensee (16 workers/licensee × $10/worker × 0.9) and $3 million for all licensees in this category ($140/licensee × 21,692 licensees). For a flow of funds at a 3 percent real discount rate, the estimated savings per licensee and for all licensees in this category are $2,000 ($140 × 14.9) and $45 million ($3 million × 14.9), respectively. For a flow of funds at a 7 percent real discount rate, the estimated savings per licensee and for all licensees in this category are $1,500 ($140 × 10.6) and $32 million ($3 million × 10.6), respectively.

In order to provide an estimate of the ''hourly'' burden reduction, the NRC performed the following analysis. The NRC estimates it will take 5 minutes (0.083 hour) for a licensee to prepare an annual dose report for each worker. Assuming that 90 percent of the 16 workers per licensee will not request a dose report, the annual burden reduction from implementing the regulatory action is estimated to be 1.2 hours per licensee (16 workers × 0.083 hour × 0.9) and 26,000 hours for all licensees in this category (1.2 hours/licensee × 21,692 licensees). For NRC licensees only, the total annual burden reduction is estimated to be 5,300 hours (1.2 hours/licensee × 4,394 NRC licensees).

3.3.2 Definition of Total Effective Dose Equivalent (TEDE)

The costs and savings associated with the revised definition of TEDE are minimal. The revision clarifies that the TEDE is defined in terms of the effective dose equivalent (for external exposures) and the committed effective dose equivalent (for internal exposures). This revision eliminates the need for licensees to repeatedly request guidance from the NRC and, in some cases, to request a license amendment to clarify the definition.

3.3.3 Labeling Containers

The revision to 10 CFR 20.1905, ''Exemptions to labeling requirements,'' applies only to nuclear power reactor licensees. These licensees will incur one-time implementation costs to revise procedures. The NRC estimates it will take 20 hours to revise the procedures for each of the 104 nuclear power plants. Assuming a staff rate of $105 per hour, the one-time cost of implementing the regulatory action will be $2,100 per licensee (20 hours × $105/hour) and $220,000 for the nuclear power industry (104 licensees × $2,100/licensee).

With respect to industry operation, as discussed in the regulatory analysis for the proposed rule (71 FR 55382; September 22, 2006), the NRC estimated an annual savings of $30,000 per nuclear power plant from using the exemption to labeling requirements for containers holding licensed material within a posted area. For the entire nuclear power industry, the NRC estimates a savings of $3.1 million (104 licensees × $30,000/licensee). For a flow of funds at a 3 percent real discount rate, the estimated savings per nuclear power plant and for the nuclear power industry are $770,000 ($30,000 × 25.50) and $79 million ($3.1 million × 25.50), respectively. For a flow of funds at a 7 percent real discount rate, the estimated savings per nuclear power plant and for the nuclear power industry are $410,000 ($30,000 × 13.77) and $43 million ($3.1 million × 13.77), respectively.

In order to provide an estimate of the ''hourly'' burden reduction, the NRC performed the following analysis. Using an annual savings of $30,000 per nuclear power plant and a staff rate of $105 per hour, the annual burden reduction from implementing the regulatory action is estimated to be 290 hours per plant ($30,000/licensee ÷ $105/hour) and the total annual industry burden reduction is 30,000 hours (290 hours/licensee × 104 licensees).

3.3.4 Cumulative Occupational Radiation Dose

Nuclear power reactor licensees.

In implementing the regulatory action, nuclear power reactor licensees will incur a one-time cost to revise procedures. The NRC estimates it will take 20 hours to revise the procedures for each of the 104 nuclear power plants. Assuming a staff rate of $105 per hour, the one-time cost of implementing the regulatory action will be $2,100 per nuclear power plant (20 hours × $105/hour) and $220,000 for the nuclear power industry (104 licensees × $2,100/licensee).

With respect to industry operation, there will be a savings from not having to obtain the records of cumulative occupational radiation dose (NRC Form 4) for a worker, unless these individuals are being authorized to receive a planned special exposure. As discussed in the regulatory analysis for the proposed rule (71 FR 55382; September 22, 2006), the NRC estimated the annual savings to be $8,500 per nuclear power plant and $880,000 for the nuclear power industry ($8,500 × 104 licensees). Based on NUREG–0713, each nuclear power plant will annually obtain the dose records for 230 workers. Also, based on public comment, the NRC assumes that each worker has previously worked for two other licensees and that these licensees will incur costs to provide the worker's dose record to the requesting nuclear power plant licensee. The average cost to each licensee to provide a dose record is estimated to be $10. Thus, the estimated savings from not having to obtain the dose records for each worker is $60 (($8,500/nuclear power plant ÷ 230 workers) + (2 × $10/licensee providing the dose record)).[1] The estimated annual savings is $14,000 per nuclear power plant ($60/worker × 230 workers) and $1.5 million for the nuclear power industry ($14,000 × 104 licensees). For a flow of funds at a 3 percent real discount rate, the estimated savings per nuclear power plant and for the nuclear power industry are $360,000 ($14,000 × 25.50) and $38 million ($1.5 million × 25.50), respectively. For a flow of funds at a 7 percent real discount rate, the estimated savings per nuclear power plant and for the nuclear power industry are $190,000 ($14,000 × 13.77) and $21 million ($1.5 million × 13.77), respectively.

In order to provide an estimate of the ''hourly'' burden reduction, the NRC performed the following analysis. Using an annual savings of $14,000 per nuclear power plant and a staff rate of $105 per hour, the annual burden reduction from implementing the regulatory action is estimated to be 130 hours per plant ($14,000/licensee ÷ $105/hour) and the total annual industry burden reduction is 14,000 hours (130 hours/licensee × 104 licensees).

REIRS materials licensees.

In implementing the regulatory action, REIRS materials licensees will incur a one-time cost to revise procedures. The NRC estimates it will take 10 hours to revise the procedures for each of the 123 REIRS materials licensees. Assuming a staff rate of $105 per hour, the one-time cost of implementing the regulatory action will be $1,050 per licensee (10 hours × $105/hour) and $130,000 for all licensees in this category (123 licensees × $1,050/licensee).

With respect to industry operation, using the 2004 data in NUREG–0713, the number of individuals working for REIRS materials licensees is 12,032. Assuming these workers are equally distributed among the 123 licensees in this group, there are about 98 workers per licensee. For this analysis, the NRC assumes that 20 percent of all workers will be affected and that 0.5 hours is required by each REIRS materials licensee (i.e., the requesting licensee) to complete, review, and authorize each NRC Form 4, ''Cumulative Occupational Dose History.'' Based on public comment, the NRC assumes that each worker has previously worked for two other licensees and that these licensees will incur costs to provide the worker's dose record to the requesting licensee. The average cost to each licensee to provide a dose record is estimated to be $10. Using a staff rate of $105 per hour for the requesting licensee, the estimated savings from not having to request the dose records (including the responses) for each worker is $75 (($105/hour × 0.5 hour/licensee requesting the dose record) + (2 × $10/licensee providing the dose record)).[2] The NRC is not aware of any licensee having authorized a planned special exposure. For this analysis, it is assumed that 99 percent of the NRC Forms 4 will not be needed as the basis for authorizing a planned special exposure. Thus, the estimated annual savings to industry is $180,000 (98 workers/licensee × $75/worker × 0.2 × 0.99 × 123 licensees). For a flow of funds at a 3 percent real discount rate, the estimated savings for industry is $2.7 million ($180,000 × 14.9), respectively. For a flow of funds at a 7 percent real discount rate, the estimated savings for industry is $1.9 million ($180,000 × 10.6).

In order to provide an estimate of the ''hourly'' burden reduction, the NRC performed the following analysis. The annual burden reduction from implementing the regulatory action is estimated to be 10 hours per licensee ((98 workers/licensee × 0.5 hour/worker × 0.2 × 0.99) + (2 × 0.10 hour/licensee providing the dose record)) and 1,200 hours for industry (10 hours/licensee × 123 licensees).

Non-REIRS materials licensees.

In implementing the regulatory action, non-REIRS materials licensees will incur a one-time cost to revise procedures. The NRC estimates it will take 10 hours to revise the procedures for each of the 21,692 non-REIRS materials licensees. Assuming a staff rate of $105 per hour, the one-time cost of implementing the regulatory action will be $1,050 per licensee (10 hours × $105/hour) and $23 million for all licensees in this category (21,692 licensees × $1,050/licensee).

With respect to industry operation, the analysis assumes 500,000 individuals working under 21,692 non-REIRS licensees and an even distribution of workers per licensee (23 workers/licensee). The NRC also assumes that 20 percent of all workers will be affected and that 0.5 hours is required to complete, review, and authorize each NRC Form 4. Based on public comment, the NRC assumes that each worker has previously worked for two other licensees and that these licensees will incur costs to provide the worker's dose record to the requesting licensee. The average cost to each licensee to provide a dose record is estimated to be $10. Using a staff rate of $105 per hour for the requesting licensee, the estimated savings from not having to request the dose records (including the responses) for each worker is $75 (($105/hour × 0.5 hour/licensee requesting the dose record) + (2 × $10/licensee providing the dose record)).[3] The NRC is not aware of any

[1] To simplify the expression of annual burden reduction (hours), the hours attributed to the requesting nuclear power plant and responding licensees are combined and attributed solely to the nuclear power plant.

[2] To simplify the expression of annual burden reduction (hours), the hours attributed to the requesting REIRS materials licensee and responding licensees are combined and attributed solely to the REIRS materials licensee.

[3] To simplify the expression of annual burden reduction (hours), the hours attributed to the requesting non-REIRS materials licensee and responding licensees are combined and attributed solely to the non-REIRS materials licensee.

licensee having authorized a planned special exposure. For this analysis, it is assumed that 99 percent of the NRC Forms 4 will not be needed as the basis for authorizing a planned special exposure. Thus, the estimated annual savings to industry is $7.4 million (23 workers/licensee × $75/worker × 0.2 × 0.99 × 21,692 licensees). For a flow of funds at a 3 percent real discount rate, the estimated savings for industry is $110 million ($7.4 million × 14.9). For a flow of funds at a 7 percent real discount rate, the estimated savings for industry is $78 million ($7.4 million × 10.6).

In order to provide an estimate of the ''hourly'' burden reduction, the NRC performed the following analysis. The annual burden reduction from implementing the regulatory action is estimated to be 2.5 hours per licensee ((23 workers/licensee × 0.5 hour/worker × 0.2 × 0.99) + (2 × 0.10 hour/licensee providing the dose record)) and 54,000 hours for industry (2.5 hours/licensee × 21,692 licensees). For NRC licensees only, the total annual burden reduction is estimated to be 11,000 hours (2.5 hours/licensee × 4,394 NRC licensees).

3.3.5 NRC Implementation and Operating Impacts

Annual dose report to workers.

The NRC will incur costs to make minor revisions to NRC Form 3, ''Notice to Employees,'' to account for the revision to the reporting of annual dose to workers under 10 CFR 19.13(b). The one-time cost for this task is estimated to be $34,000 (320 staff-hours at $105 per hour). This is the only impact to the NRC for this action.

Definition of Total Effective Dose Equivalent (TEDE).

The NRC will incur costs to make minor revisions to NRC Form 4, ''Cumulative Occupational Dose History,'' and NRC Form 5, ''Occupational Dose Record for a Monitoring Period,'' and their instructions, to account for the revision to the definition of TEDE. The one-time cost to revise NRC Forms 4 and 5 and their instructions is estimated to be $34,000 (320 staff-hours at $105 per hour). This is the only impact to the NRC for this action.

Labeling Containers.

The NRC will incur no implementation or operating impacts due to the revision to the exemptions to labeling requirements for containers holding licensed material under 10 CFR 20.1905.

Cumulative Occupational Radiation Dose.

The NRC will incur no implementation impacts due to the revision to remove the requirement that licensees attempt to obtain cumulative occupational radiation dose records for workers unless these individuals are being authorized to receive a planned special exposure.

With respect to NRC operation, there will be a savings from not having inspectors review the information on NRC Form 4, or its equivalent, and supporting records maintained by licensees. For nuclear power reactor licensees, it is estimated that 1 hour of inspection time is spent reviewing such records at each of the 104 nuclear power plants. Assuming an NRC staff rate of $105 per hour, the estimated annual savings to the NRC is $11,000 (1 hour × 104 licensees × $105/hour). For a flow of funds at 3 and 7 percent real discount rates, the estimated savings to the NRC are $280,000 ($11,000 × 25.50) and $150,000 ($11,000 × 13.77), respectively. The annual burden reduction to the NRC from implementing the regulatory action is estimated to be 104 hours (1 hour × 104 licensees).

For each of the 123 REIRS materials licensees, it is estimated that 6 minutes (0.1 hour) of inspection time is spent reviewing NRC Form 4, or its equivalent, and supporting records. The NRC is not aware of any licensee having authorized a planned special exposure. For this analysis, it is assumed that 99 percent of the NRC Forms 4 will not need to be inspected as the basis for authorizing a planned special exposure. Assuming an NRC staff rate of $105 per hour, the estimated annual savings to the NRC is $1,300 (0.1 hour × 123 licensees × $105/hour × 0.99). For a flow of funds at 3 and 7 percent real discount rates, the estimated savings to the NRC are $19,000 ($1,300 × 14.9) and $14,000 ($1,300 × 10.6), respectively. The annual burden reduction to the NRC from implementing the regulatory action is estimated to be 12 hours (0.1 hour × 123 licensees × 0.99).

For each of the 4,394 NRC licensees designated as non-REIRS materials licensees, it is estimated that 6 minutes (0.1 hour) of inspection time is spent reviewing NRC Form 4, or its equivalent, and supporting records. As discussed above, it is assumed that 99 percent of the NRC Forms 4 will not need to be inspected as the basis for authorizing a planned special exposure. Assuming an NRC staff rate of $105 per hour, the estimated annual savings to the NRC is $46,000 (0.1 hour × 4,394 licensees × $105/hour × 0.99). For a flow of funds at 3 and 7 percent real discount rates, the estimated savings to the NRC are $685,000 ($46,000 × 14.9) and $490,000 ($46,000 × 10.6), respectively. The annual burden reduction to the NRC from implementing the regulatory action is estimated to be 435 hours (0.1 hour × 4,394 licensees × 0.99).

3.3.6 Other Government Implementation and Operating Impacts

The Agreement States will incur no implementation or operating impacts due to the revisions to the reporting of annual dose to workers, the definition of TEDE, or the labeling of containers holding licensed material. For the revisions to the reporting of annual dose to workers and the definition of TEDE, the only impacts are to the NRC to revise NRC Forms 3, 4, and 5. Also, because the revision to the labeling of containers applies only to nuclear power plants licensed by the NRC, there are no impacts to the Agreement States for this action.

Cumulative Occupational Radiation Dose.

For each of the 17,298 Agreement State licensees designated as non-REIRS materials licensees, it is estimated that 6 minutes (0.1 hour) of inspection time is spent reviewing NRC Form 4, or its equivalent, and supporting records. As discussed above, it is assumed that 99 percent of the NRC Forms 4 will not need to be inspected as the basis for authorizing a planned special exposure. Assuming an Agreement State staff rate of $105 per hour, the estimated annual savings to the Agreement States is $180,000 (0.1 hour × 17,298 licensees × $105/hour × 0.99). For a flow of funds at 3 and 7 percent real discount rates, the estimated savings to the Agreement States are $2.7 million ($180,000 × 14.9) and $1.9 million ($180,000 × 10.6), respectively. The annual burden reduction to the Agreement States from implementing the regulatory action is estimated to be 1,700 hours (0.1 hour × 17,298 licensees × 0.99).

4. Presentation of Results

Because each revision to the Commission's regulations will reduce burden on licensees, which is the objective of this rulemaking, the costs and benefits have been aggregated for this analysis. The results of the NRC's value-impact assessment for industry implementation and operation are summarized in the following table.

TABLE 1.—SUMMARY OF INDUSTRY IMPLEMENTATION AND OPERATING SAVINGS

[Costs]

Final regulatory action	Licensee category	Implementation savings (costs) ($1,000)	Operating savings (costs)	
			Using 7 percent discount rate ($1,000)	Using 3 percent discount rate ($1,000)
Annual Dose Report to Workers	Nuclear power reactor	(220)	4,300	8,000
	REIRS materials	(130)	780	1,100
	Non-REIRS materials	(23,000)	32,000	45,000
TEDE	Nuclear power reactor	n/a	minimal	minimal
	REIRS materials	n/a	minimal	minimal
	Non-REIRS materials	n/a	minimal	minimal
Labeling Containers	Nuclear power reactor	(220)	43,000	79,000
	REIRS materials	n/a	n/a	n/a
	Non-REIRS materials	n/a	n/a	n/a
Cumulative Occupational Radiation Dose	Nuclear power reactor	(220)	21,000	38,000
	REIRS materials	(130)	1,900	2,700
	Non-REIRS materials	(23,000)	78,000	110,000
Subtotals	Nuclear power reactor	(660)	68,300	125,000
	REIRS materials	(260)	2,680	3,800
	Non-REIRS materials	(46,000)	110,000	155,000
Total (rounded)		(47,000)	180,000	280,000

The results of the NRC's value-impact assessment for NRC implementation and operation are summarized in the following table.

TABLE 2.—SUMMARY OF NRC IMPLEMENTATION AND OPERATING SAVINGS

[Costs]

Final regulatory action	Licensee category	Implementation savings (costs) ($1,000)	Operating savings (costs)	
			Using 7 percent discount rate ($1,000)	Using 3 percent discount rate ($1,000)
Annual Dose Report to Workers	Nuclear power reactor			
	REIRS materials	(34)	n/a	n/a
	Non-REIRS materials			
TEDE	Nuclear power reactor			
	REIRS materials	(34)	n/a	n/a
	Non-REIRS materials			
Labeling Containers	Nuclear power reactor			
	REIRS materials	n/a	n/a	n/a
	Non-REIRS materials			
Cumulative Occupational Radiation Dose	Nuclear power reactor		150	280
	REIRS materials	n/a	14	19
	Non-REIRS materials		490	685
Total (rounded)		(68)	650	980

The results of the NRC's value-impact assessment for Agreement States implementation and operation are summarized in the following table.

TABLE 3.—SUMMARY OF AGREEMENT STATES IMPLEMENTATION AND OPERATING SAVINGS

[Costs]

Final regulatory action	Implementation savings (costs) ($1,000)	Operating savings (costs)	
		Using 7 percent discount rate ($1,000)	Using 3 percent discount rate ($1,000)
Annual Dose Report to Workers	n/a	n/a	n/a
TEDE	n/a	n/a	n/a
Labeling Containers	n/a	n/a	n/a
Cumulative Occupational Radiation Dose	n/a	1,900	2,700
Total (rounded)	n/a	1,900	2,700

The results of the NRC's assessment of annual burden reduction in hours per licensee and industry are summarized in the following table.

TABLE 4.—SUMMARY OF ANNUAL BURDEN REDUCTION PER LICENSEE AND INDUSTRY

Final regulatory action	Licensee category	Annual burden reduction (hours)	
		Licensee	Industry
Annual Dose Report to Workers	Nuclear power reactor	63	6,600
	REIRS materials	5	620
	Non-REIRS materials	1.2	26,000
TEDE	Nuclear power reactor	n/a	n/a
	REIRS materials	n/a	n/a
	Non-REIRS materials	n/a	n/a
Labeling Containers	Nuclear power reactor	290	30,000
	REIRS materials	n/a	n/a
	Non-REIRS materials	n/a	n/a
Cumulative Occupational Radiation Dose	Nuclear power reactor	130	14,000
	REIRS materials	10	1,200
	Non-REIRS materials	2.5	54,000
Subtotals	Nuclear power reactor	483	50,600
	REIRS materials	15	1,820
	Non-REIRS materials	3.7	80,000
Total (rounded)		500	130,000

The results of the NRC's assessment of annual burden reduction in hours per NRC and Agreement States are summarized in the following table.

TABLE 5.—SUMMARY OF ANNUAL BURDEN REDUCTION PER NRC AND AGREEMENT STATES

Final regulatory action	Annual burden reduction (hours)	
	NRC	Agreement states
Annual Dose Report to Workers	n/a	n/a
TEDE	n/a	n/a
Labeling Containers	n/a	n/a
Cumulative Occupational Radiation Dose	550	1,700
Total	550	1,700

The total implementation cost to the NRC for the regulatory action is $68,000. The total operating impact to the NRC for a flow of funds at 3 and 7 percent real discount rates is an estimated savings of $980,000 and $650,000, respectively.

There are no implementation impacts to the Agreement States for the regulatory action. The total operating impact to the Agreement States for a flow of funds at 3 and 7 percent real discount rates is an estimated savings of $2.7 million and $1.9 million, respectively.

The net present value of the regulatory action is $237 million at a 3

percent real discount rate [industry operation ($280 million) + NRC operation ($980,000) + Agreement State Operation (2.7 million)]—[NRC implementation ($68,000) + industry implementation ($47 million)]. The net present value of the regulatory action is $135 million at a 7 percent real discount rate [industry operation ($180 million) + NRC operation ($650,000) + Agreement State Operation (1.9 million)]—[NRC implementation ($68,000) + industry implementation ($47 million)].

The total reduction in annual burden from implementing the regulatory action is estimated to be 132,000 hours [industry (130,000 hours) + NRC (550 hours) + Agreement States (1,700 hours)].

5. Decision Rationale

The net present value of this regulatory action is $237 million and $135 million for 3 and 7 percent real discount rates, respectively. The total industry reduction in annual burden from implementing the regulatory action is estimated to be 132,000 hours. These savings are obtained by reducing administrative and information collection requirements on licensees. The Commission is implementing this rule because the changes improve the effectiveness of the Commission's regulations and reduce unnecessary regulatory burden without affecting the level of protection for either the health and safety of workers and the public or for the environment.

6. Implementation Schedule

The final rule will become effective 30 days after its publication in the **Federal Register**. No impediments to the implementation of the recommended alternative have been identified.

XI. Regulatory Flexibility Certification

As required by the Regulatory Flexibility Act of 1980, 5 U.S.C. 605(b), the Commission certifies that this rule will not have a significant economic impact upon a substantial number of small entities. Although three of the changes (i.e., the reporting of annual dose to workers, the definition of TEDE, and the determination of cumulative occupational radiation dose) in the final rule pertain to all 21,692 licensees regulated by the NRC and Agreement States, licensees, including the affected small entities, could elect to continue their current practices and remain in compliance with the final regulations. Licensees will incur the costs of changing their procedures only if they determine that the changes will be cost effective; therefore, the NRC has determined that the changes will not have a significant economic impact on licensees defined as small entities. The change related to labeling containers affects only licensees authorized to operate nuclear power reactors. These licensees do not fall within the scope of the definition of ''small entities'' in the Regulatory Flexibility Act or the scope of the size standards established by the NRC in 10 CFR 2.810.

XII. Backfit Analysis

The NRC has determined that the backfit rule does not apply to this rule and that a backfit analysis is not required for this rule because these amendments do not involve any provisions that would impose backfits as defined in 10 CFR chapter I.

XIII. Congressional Review Act

In accordance with the Congressional Review Act of 1996, the NRC has determined that this action is a major rule and has verified this determination with the Office of Information and Regulatory Affairs of OMB.

List of Subjects

10 CFR Part 19

Criminal penalties, Environmental protection, Nuclear materials, Nuclear power plants and reactors, Occupational safety and health, Radiation protection, Reporting and recordkeeping requirements, Sex discrimination.

10 CFR Part 20

Byproduct material, Criminal penalties, Licensed material, Nuclear materials, Nuclear power plants and reactors, Occupational safety and health, Packaging and containers, Radiation protection, Reporting and recordkeeping requirements, Source material, Special nuclear material, Waste treatment and disposal.

10 CFR Part 50

Antitrust, Classified information, Criminal penalties, Fire protection, Intergovernmental relations, Nuclear power plants and reactors, Radiation protection, Reactor siting criteria, Reporting and recordkeeping requirements.

■ For the reasons set out in the preamble and under the authority of the Atomic Energy Act of 1954, as amended; the Energy Reorganization Act of 1974, as amended; and 5 U.S.C. 553, the NRC is proposing to adopt the following amendments to 10 CFR Parts 19, 20, and 50.

PART 19—NOTICES, INSTRUCTIONS AND REPORTS TO WORKERS: INSPECTION AND INVESTIGATIONS

■ 1. The authority citation for part 19 continues to read as follows:

Authority: Secs. 53, 63, 81, 103, 104, 161, 186, 68 Stat. 930, 933, 935, 936, 937, 948, 955, as amended, sec. 234, 83 Stat. 444, as amended, sec. 1701, 106 Stat. 2951, 2952, 2953 (42 U.S.C. 2073, 2093, 2111, 2133, 2134, 2201, 2236, 2282, 2297f); sec. 201, 88 Stat. 1242, as amended (42 U.S.C. 5841); Pub. L. 95–601, sec. 10, 92 Stat. 2951 (42 U.S.C. 5851); sec. 1704, 112 Stat. 2750 (44 U.S.C. 3504 note).

Section 19.32 is also issued under sec. 401, 88 Stat. 1254 (42 U.S.C. 5891).

■ 2. In § 19.13, paragraphs (b) and (d) are revised to read as follows:

§ 19.13 Notifications and reports to individuals.

* * * * *

(b) Each licensee shall make dose information available to workers as shown in records maintained by the licensee under the provisions of 10 CFR 20.2106. The licensee shall provide an annual report to each individual monitored under 10 CFR 20.1502 of the dose received in that monitoring year if:

(1) The individual's occupational dose exceeds 1 mSv (100 mrem) TEDE or 1 mSv (100 mrem) to any individual organ or tissue; or

(2) The individual requests his or her annual dose report.

* * * * *

(d) When a licensee is required by §§ 20.2202, 20.2203 or 20.2204 of this chapter to report to the Commission any exposure of an individual to radiation or radioactive material, the licensee shall also provide the individual a report on his or her exposure data included in the report to the Commission. This report must be transmitted no later than the transmittal to the Commission.

* * * * *

PART 20—STANDARDS FOR PROTECTION AGAINST RADIATION

■ 3. The authority citation for part 20 continues to read as follows:

Authority: Secs. 53, 63, 65, 81, 103, 104, 161, 182, 186, 68 Stat. 930, 933, 935, 936, 937, 948, 953, 955, as amended, sec. 1701, 106 Stat. 2951, 2952, 2953 (42 U.S.C. 2073, 2093, 2095, 2111, 2133, 2134, 2201, 2232, 2236, 2297f), secs. 201, as amended, 202, 206, 88 Stat. 1242, as amended, 1244, 1246 (42 U.S.C. 5841, 5842, 5846); sec. 1704, 112 Stat. 2750 (44 U.S.C. 3504 note); sec. 651(e), Pub. L. 109–58, 119 Stat. 806–810 (42 U.S.C. 2014, 2021, 2021b, 2111).

■ 4. In § 20.1003, the definition of *Total Effective Dose Equivalent* is revised to read as follows:

§ 20.1003 Definitions.

* * * * *

Total Effective Dose Equivalent (TEDE) means the sum of the effective dose equivalent (for external exposures) and the committed effective dose equivalent (for internal exposures).

* * * * *

■ 5. In § 20.1201, paragraph (c) is revised to read as follows:

§ 20.1201 Occupational dose limits for adults.

* * * * *

(c) When the external exposure is determined by measurement with an external personal monitoring device, the deep-dose equivalent must be used in place of the effective dose equivalent, unless the effective dose equivalent is determined by a dosimetry method approved by the NRC. The assigned deep-dose equivalent must be for the part of the body receiving the highest exposure. The assigned shallow-dose equivalent must be the dose averaged over the contiguous 10 square centimeters of skin receiving the highest exposure. The deep-dose equivalent, lens-dose equivalent, and shallow-dose equivalent may be assessed from surveys or other radiation measurements for the purpose of demonstrating compliance with the occupational dose limits, if the individual monitoring device was not in the region of highest potential exposure, or the results of individual monitoring are unavailable.

* * * * *

■ 6. In § 20.1905, paragraph (f) is revised and paragraph (g) is added to read as follows:

§ 20.1905 Exemptions to labeling requirements.

* * * * *

(f) Installed manufacturing or process equipment, such as reactor components, piping, and tanks; or

(g) Containers holding licensed material (other than sealed sources that are either specifically or generally licensed) at a facility licensed under Parts 50 or 52 of this chapter, not including non-power reactors, that are within an area posted under the requirements in § 20.1902 if the containers are:

(1) Conspicuously marked (such as by providing a system of color coding of containers) commensurate with the radiological hazard;

(2) Accessible only to individuals who have sufficient instruction to minimize radiation exposure while handling or working in the vicinity of the containers; and

(3) Subject to plant procedures to ensure they are appropriately labeled, as specified at § 20.1904 before being removed from the posted area.

■ 7. In § 20.2104, paragraph (a), the introductory text of paragraph (c), and paragraph (d) are revised to read as follows:

§ 20.2104 Determination of prior occupational dose.

(a) For each individual who is likely to receive an annual occupational dose requiring monitoring under § 20.1502, the licensee shall determine the occupational radiation dose received during the current year.

* * * * *

(c) In complying with the requirements of paragraphs (a) or (b) of this section, a licensee may—

* * * * *

(d) The licensee shall record the exposure history of each individual, as required by paragraphs (a) or (b) of this section, on NRC Form 4, or other clear and legible record, including all of the information required by NRC Form 4.[4] The form or record must show each period in which the individual received occupational exposure to radiation or radioactive material and must be signed by the individual who received the exposure. For each period for which the licensee obtains reports, the licensee shall use the dose shown in the report in preparing the NRC Form 4. For any period in which the licensee does not obtain a report, the licensee shall place a notation on the NRC Form 4 indicating the periods of time for which data are not available.

* * * * *

■ 8. Section 20.2205 is revised to read as follows:

440.250 [Amended]

§ 20.2205 Reports to individuals of exceeding dose limits.

When a licensee is required by §§ 20.2203 or 20.2204 to report to the Commission any exposure of an identified occupationally exposed individual, or an identified member of the public, to radiation or radioactive material, the licensee shall also provide the individual a report on his or her exposure data included in the report to Commission. This report must be transmitted no later than the transmittal to the Commission.

[4] Licensees are not required to partition historical dose between external dose equivalent(s) and internal committed dose equivalent(s). Further, occupational exposure histories obtained and recorded on NRC Form 4 before January 1, 1994, might not have included effective dose equivalent, but may be used in the absence of specific information on the intake of radionuclides by the individual.

PART 50—DOMESTIC LICENSING OF PRODUCTION AND UTILIZATION FACILITIES

■ 9. The authority citation for part 50 continues to read as follows:

Authority: Secs. 102, 103, 104, 105, 161, 182, 183, 186, 189, 68 Stat. 936, 937, 938, 948, 953, 954, 955, 956, as amended, sec. 234, 83 Stat. 444, as amended (42 U.S.C. 2132, 2133, 2134, 2135, 2201, 2232, 2233, 2236, 2239, 2282); secs. 201, as amended, 202, 206, 88 Stat. 1242, as amended, 1244, 1246 (42 U.S.C. 5841, 5842, 5846); sec. 1704, 112 Stat. 2750 (44 U.S.C. 3504 note); sec. 651(e), Pub. L. 109–58, 119 Stat. 806–810 (42 U.S.C. 2014, 2021, 2021b, 2111). Section 50.7 also issued under Pub. L. 95–601, sec. 10, 92 Stat. 2951 (42 U.S.C. 5841). Section 50.10 also issued under secs. 101, 185, 68 Stat. 955, as amended (42 U.S.C. 2131, 2235); sec. 102, Pub. L. 91–190, 83 Stat. 853 (42 U.S.C. 4332). Sections 50.13, 50.54(dd), and 50.103 also issued under sec. 108, 68 Stat. 939, as amended (42 U.S.C. 2138).

Sections 50.23, 50.35, 50.55, and 50.56 also issued under sec. 185, 68 Stat. 955 (42 U.S.C. 2235). Sections 50.33a, 50.55a and Appendix Q also issued under sec. 102, Pub. L. 91–190, 83 Stat. 853 (42 U.S.C. 4332). Sections 50.34 and 50.54 also issued under sec. 204, 88 Stat. 1245 (42 U.S.C. 5844). Sections 50.58, 50.91, and 50.92 also issued under Pub. L. 97–415, 96 Stat. 2073 (42 U.S.C. 2239). Section 50.78 also issued under sec. 122, 68 Stat. 939 (42 U.S.C. 2152). Sections 50.80–50.81 also issued under sec. 184, 68 Stat. 954, as amended (42 U.S.C. 2234). Appendix F also issued under sec. 187, 68 Stat. 955 (42 U.S.C. 2237).

■ 10. In § 50.2, the definition of *Total Effective Dose Equivalent* is revised to read as follows:

§ 50.2 Definitions.

* * * * *

Total Effective Dose Equivalent (TEDE) means the sum of the effective dose equivalent (for external exposures) and the committed effective dose equivalent (for internal exposures).

* * * * *

Dated at Rockville, Maryland, this 28th day of November 2007.

For the Nuclear Regulatory Commission.

Annette L. Vietti-Cook,

Secretary of the Commission.

[FR Doc. E7–23469 Filed 12–3–07; 8:45 am]

BILLING CODE 7590–01–P

FARM CREDIT ADMINISTRATION

12 CFR Part 620

RIN 3052–AC37

Disclosure to Shareholders; Annual Report to Shareholders

AGENCY: Farm Credit Administration.

ACTION: Final rule.

SUMMARY: The Farm Credit Administration (FCA, Agency, we) issues this final rule amending our regulations to allow Farm Credit System (System) institutions 90 calendar days to prepare and distribute annual reports to shareholders, while retaining the 75 calendar day requirement for electronic reporting and distribution to the FCA.

DATES: *Effective Date:* This regulation will be effective 30 days after publication in the **Federal Register** during which either or both Houses of Congress are in session. We will publish a notice of the effective date in the **Federal Register**.

FOR FURTHER INFORMATION CONTACT:
Christopher D. Wilson, Policy Analyst, Office of Regulatory Policy, Farm Credit Administration, McLean, VA 22102–5090, (703) 883–4414, TTY (703) 883–4434, or
Bob Taylor, Attorney Advisor, Office of General Counsel, Farm Credit Administration, McLean, VA 22102–5090, (703) 883–4020, TTY (703) 883–4020.

SUPPLEMENTARY INFORMATION:

I. Objectives

Our objectives in this final rule are to:

- Extend the time for System institutions to prepare and distribute their annual reports to shareholders from 75 calendar days to 90 calendar days; and
- Promote high quality and timely reporting and disclosure by System institutions to shareholders and the FCA.

II. Background

A. Annual Report Distribution Under FCA Regulations

Part 620, Disclosure to Shareholders, establishes the requirements for financial reports for Farm Credit banks and associations. In pertinent part, § 620.4 establishes the time requirement for System institutions to prepare and provide to their shareholders an annual report. System institutions have historically distributed or made annual reports available to shareholders in hard copy.

In December 2006, the FCA published a final rule amending § 620.4 to require that System institutions provide annual reports to shareholders within 75 calendar days from the close of the fiscal year. Prior to that time, System institutions had a 90-day deadline. The FCA noted that significant technological developments had occurred over the past decade that had increased the market's appetite for timelier disclosures of financial information. Consistent with changing industry practices, the FCA believed that accelerated reporting would improve information flow and facilitate shareholder and investor decisionmaking. The rule became effective on February 16, 2007. Compliance with the final rule would take effect by the start of the fiscal year immediately following the effective date of the rule. Thus, the 2007 annual report was to be the first annual report distributed under the accelerated filing requirements.

B. System's Concerns

After the rule became final, System institutions raised several concerns regarding the new 75-day filing requirement. Specifically, System institutions stated that they believed the 75-day requirement only applied to the electronic filing of the report with the FCA and not to the report provided to shareholders. They also collectively stated that it would be burdensome for them to comply with the 75 calendar day accelerated distribution requirement for the annual report to shareholders because of the prohibitive costs and time needed for: (1) The external audit and review process; (2) the audit committee review; and (3) the printing and distribution of the annual report. Furthermore, System institutions indicated that the accelerated filing requirement could adversely affect the timeliness, accuracy, and high quality that have been standard with such disclosures.

III. Proposed Rule on Annual Report to Shareholders

After reviewing the System's concerns, we published a proposed rule in the **Federal Register** on August 14, 2007, with a 30-day comment period that ended on September 13, 2007. *See* 72 FR 45390, Aug. 14, 2007. The proposed rule would allow a System institution up to 90 calendar days from the close of its fiscal year to prepare and provide a copy of the annual report to shareholders, while retaining the 75 calendar day accelerated filing requirement to send an electronic copy of the report to us. To ensure accelerated disclosure, the proposed rule would require that each System institution: (1) Send the report electronically to the FCA within 75 calendar days from the close of the institution's fiscal year and, at the same time, publish a copy of its annual report on its Web site; and (2) provide prior written notification to its shareholders that the institution will publish its annual report on the institution's Web site when the report is sent electronically to the FCA. Furthermore, we stated that the copy of the annual report provided to the shareholders must be substantively identical with the annual report sent to the FCA.

We believed that the bifurcated approach resolved any ambiguities from the prior rulemaking and appropriately addressed the System's concerns of providing attractive, high quality, annual reports to shareholders, while meeting the goal of accelerated filing and disclosure.

IV. Comments on the Proposed Rule

We received comments on the proposed rule from four System institutions, the Federal Farm Credit Banks Funding Corporation (Funding Corporation) on behalf of the System's Accounting Standards Workgroup, two System banks, and a System association. Overall, commenters generally supported the proposed rule, but expressed some concerns and suggested several changes to the proposed rule. We address the substantive comments below.

A. Publish the Annual Report on an Institution's Web Site

The Funding Corporation stated that it believed that not all associations have Web sites and wanted the FCA to clarify what such an institution should do.

We discovered that two small associations do not appear to have an online presence. We agree with the commenter that there is a question of how these institutions will comply with the rule. Because there are only two System institutions without a Web site, we do not believe that we need to change the rule as proposed. For these two institutions only, they could: (1) Develop their own Web sites; (2) publish their annual report on another Web site that is available to the shareholders without an access cost; or (3) make it available by other equivalent means. For example, these two institutions could determine whether they could publish their annual reports on the district bank's or the Farm Credit Council's Web site. The institutions would still be required to comply with all other provisions of the rule, including providing a notice to their shareholders where the annual report

will be made available and sending a substantively identical copy of the annual report to both the FCA and the shareholders. Also, we note that under § 620.2(b), each institution must make its annual report available for public inspection at the institution and at the FCA office where the report is filed.

B. Prior Written Notification to Shareholders

We received identical comments from two commenters on § 620.4(a)(3), which requires each System institution to provide prior written notification to its shareholders that the institution will publish its annual report on its Web site when the report is sent electronically to the FCA. Commenters asserted: (1) That the requirement to provide prior written notification to shareholders would be unreasonably burdensome and not confer any potential benefits to shareholders; and (2) it was unclear how often written notification must be provided.

As to the first comment, we have assessed the potential benefits of enhanced shareholder decisionmaking versus the costs of providing timelier financial and operating disclosures. Although associations may have some added burden from prior written notification, we fully expect that any such added burden to be minimal and far outweighed by the benefits to shareholders. As discussed below, System institutions have many options on how to comply with the requirement of prior written notification.

As to the second comment on how often written notice is required, we again state that written notice must occur only once. In the proposed rule, we stated that the prior written notice must be prominent and conspicuous so that there is effective shareholder notice. This means that a System institution must provide each shareholder effective notice only one time. Institutions have the flexibility to determine the most appropriate or cost-effective way(s) to implement this requirement, including written notification in the Annual Meeting Information Statement, in the preceding fiscal year annual report, when a loan is made, sending a postcard to all shareholders, or including the notice with correspondence to shareholders (*e.g.*, annual tax statements, newsletters, etc.)

C. Communicating Notice of Web Site Availability

Commenters also questioned the need to require System institutions to notify shareholders of the Web site availability of annual reports. The commenters stated that posting annual reports on an institution's Web site does not fulfill the regulatory obligation to deliver the reports to shareholders. Finally, they further stated that the individuals most likely to use early Web site access to the annual reports are those who would consult the Web site for information anyway.

We believe that the accelerated filing and posting on the Web site of the annual report improves information flow and facilitates shareholder and investor decisionmaking. The use of the Internet and electronic reporting have become industry standards. Although requiring a System institution to post annual reports on its Web site does not fulfill all regulatory obligations, it does facilitate achieving the desired objective of timelier disclosures and improved information flow between associations and their shareholders and investors. Accordingly, a System institution should also include the Web site address with the written notification.

D. Persons Entitled to Notice

Two commenters said that the proposed rule requires that notice be provided to ''shareholders and other interested persons,'' but does not define the term ''other interested persons.'' The commenters suggested that we either define or delete this term.

We agree with the commenters that, as currently written, the term ''other interested persons'' may be unclear. Thus, we are eliminating reference to that term. The final rule will require that notice be provided to ''shareholders.''

V. Description of Final Rule

A. Section 620.4—Preparing and Providing the Annual Report

Section 620.4 establishes the requirement for each System institution to prepare and provide a copy of its annual reports to its shareholders. Existing paragraph (a) of this section requires that each System institution prepare and provide to its shareholders an annual report within 75 days of the end of its fiscal year. In the proposed rule, we proposed to revise § 620.4 to require that each institution of the Farm Credit System: (1) Prepare and send us an electronic copy of its annual report within 75 calendar days of the end of its fiscal year; (2) publish a copy of its annual report on its Web site when it sends us the electronic copy; (3) provide prior written notification to its shareholders and other interested persons that the institution will publish its annual report on the institution's Web site when it is sent electronically to us; and, (4) within 90 calendar days of the end of its fiscal year, prepare and provide to its shareholders an annual report that is substantively identical to the copy of report that it sent to us.

After careful consideration of the substantive comments received, we adopt the modified provisions as final.

B. Technical Amendment

We are not making a technical amendment because there is no need for it.

VI. Regulatory Flexibility Act

Pursuant to section 605(b) of the Regulatory Flexibility Act (5 U.S.C. 601 *et seq.*), the FCA hereby certifies that the final rule will not have a significant economic impact on a substantial number of small entities. Each of the banks in the System, considered together with its affiliated associations, has assets and annual income in excess of the amounts that would qualify them as small entities. Therefore, System institutions are not ''small entities'' as defined in the Regulatory Flexibility Act.

List of Subjects in 12 CFR Part 620

Accounting, Agriculture, Banks, banking, Reporting and recordkeeping requirements, Rural areas.

■ For the reasons stated in the preamble, we are amending part 620 of chapter VI, title 12 of the Code of Federal Regulations as follows:

PART 620—DISCLOSURE TO SHAREHOLDERS

■ 1. The authority citation for part 620 continues to read as follows:

Authority: Secs. 4.19, 5.9, 5.17, 5.19, 8.11 of the Farm Credit Act (12 U.S.C. 2207, 2243, 2252, 2254, 2279aa–11); sec. 424 of Pub. L. 100–233, 100 Stat. 1568, 1656.

Subpart B—Annual Report to Shareholders

■ 2. Revise § 620.4(a) to read as follows:

§ 620.4 Preparing and providing the annual report.

* * * * *

(a) Each institution of the Farm Credit System must:

(1) Prepare and send to the Farm Credit Administration an electronic copy of its annual report within 75 calendar days of the end of its fiscal year;

(2) Publish a copy of its annual report on its Web site when it sends the report electronically to the Farm Credit Administration;

(3) Provide prior written notification to its shareholders that the institution

will publish its annual report on the institution's Web site when the report is sent electronically to the Farm Credit Administration; and

(4) Within 90 calendar days of the end of its fiscal year, prepare and provide to its shareholders an annual report substantively identical to the copy of the report sent to the Farm Credit Administration under paragraph (a)(1) of this section.

* * * * *

Dated: November 28, 2007.

Roland E. Smith,

Secretary, Farm Credit Administration Board.

[FR Doc. E7–23502 Filed 12–3–07; 8:45 am]

BILLING CODE 6705–01–P

DEPARTMENT OF TRANSPORTATION

Federal Aviation Administration

14 CFR Part 97

[Docket No. 30580; Amdt. No. 3245]

Standard Instrument Approach Procedures, and Takeoff Minimums and Obstacle Departure Procedures; Miscellaneous Amendments

AGENCY: Federal Aviation Administration (FAA), DOT.

ACTION: Final rule.

SUMMARY: This Rule establishes, amends, suspends, or revokes Standard Instrument Approach Procedures (SIAPs) and associated Takeoff Minimums and Obstacle Departure Procedures for operations at certain airports. These regulatory actions are needed because of the adoption of new or revised criteria, or because of changes occurring in the National Airspace System, such as the commissioning of new navigational facilities, adding new obstacles, or changing air traffic requirements. These changes are designed to provide safe and efficient use of the navigable airspace and to promote safe flight operations under instrument flight rules at the affected airports.

DATES: This rule is effective December 4, 2007. The compliance date for each SIAP, associated Takeoff Minimums, and ODP is specified in the amendatory provisions.

The incorporation by reference of certain publications listed in the regulations is approved by the Director of the Federal Register as of December 4, 2007.

ADDRESSES: Availability of matters incorporated by reference in the amendment is as follows:

For Examination—

1. FAA Rules Docket, FAA Headquarters Building, 800 Independence Avenue, SW., Washington, DC 20591;

2. The FAA Regional Office of the region in which the affected airport is located;

3. The National Flight Procedures Office, 6500 South MacArthur Blvd., Oklahoma City, OK 73169 or,

4. The National Archives and Records Administration (NARA). For information on the availability of this material at NARA, call 202–741–6030, or go to: *http://www.archives.gov/federal_register/code_of_federal_regulations/ibr_locations.html.*

Availability—All SIAPs and Takeoff Minimums and ODPs are available online free of charge. Visit *nfdc.faa.gov* to register. Additionally, individual SIAP and Takeoff Minimums and ODP copies may be obtained from:

1. FAA Public Inquiry Center (APA–200), FAA Headquarters Building, 800 Independence Avenue, SW., Washington, DC 20591; or

2. The FAA Regional Office of the region in which the affected airport is located.

FOR FURTHER INFORMATION CONTACT: Harry. J. Hodges, Flight Procedure Standards Branch (AFS–420), Flight Technologies and Programs Division, Flight Standards Service, Federal Aviation Administration, Mike Monroney Aeronautical Center, 6500 South MacArthur Blvd., Oklahoma City, OK 73169 (Mail Address: P.O. Box 25082, Oklahoma City, OK 73125) telephone: (405) 954–4164.

SUPPLEMENTARY INFORMATION: This rule amends Title 14 of the Code of Federal Regulations, Part 97 (14 CFR part 97), by establishing, amending, suspending, or revoking SIAPs, Takeoff Minimums and/or ODPs. The complete regulatory description of each SIAP and its associated Takeoff Minimums or ODP for an identified airport is listed on FAA form documents which are incorporated by reference in this amendment under 5 U.S.C. 552(a), 1 CFR part 51, and 14 CFR part 97.20. The applicable FAA Forms are FAA Forms 8260–3, 8260–4, 8260–5, 8260–15A, and 8260–15B when required by an entry on 8260–15A.

The large number of SIAPs, Takeoff Minimums and ODPs, in addition to their complex nature and the need for a special format make publication in the **Federal Register** expensive and impractical. Furthermore, airmen do not use the regulatory text of the SIAPs, Takeoff Minimums or ODPs, but instead refer to their depiction on charts printed by publishers of aeronautical materials. Thus, the advantages of incorporation by reference are realized and publication of the complete description of each SIAP, Takeoff Minimums and ODP listed on FAA forms is unnecessary. This amendment provides the affected CFR sections and specifies the types of SIAPs and the effective dates of the SIAPs, the associated Takeoff Minimums, and ODPs. This amendment also identifies the airport and its location, the procedure, and the amendment number.

The Rule

This amendment to 14 CFR part 97 is effective upon publication of each separate SIAP, Takeoff Minimums and ODP as contained in the transmittal. Some SIAP and Takeoff Minimums and textual ODP amendments may have been issued previously by the FAA in a Flight Data Center (FDC) Notice to Airmen (NOTAM) as an emergency action of immediate flight safety relating directly to published aeronautical charts. The circumstances which created the need for some SIAP and Takeoff Minimums and ODP amendments may require making them effective in less than 30 days. For the remaining SIAPs and Takeoff Minimums and ODPs, an effective date at least 30 days after publication is provided.

Further, the SIAPs and Takeoff Minimums and ODPs contained in this amendment are based on the criteria contained in the U.S. Standard for Terminal Instrument Procedures (TERPS). In developing these SIAPs and Takeoff Minimums and ODPs, the TERPS criteria were applied to the conditions existing or anticipated at the affected airports. Because of the close and immediate relationship between these SIAPs, Takeoff Minimums and ODPs, and safety in air commerce, I find that notice and public procedure before adopting these SIAPs, Takeoff Minimums and ODPs are impracticable and contrary to the public interest and, where applicable, that good cause exists for making some SIAPs effective in less than 30 days.

Conclusion

The FAA has determined that this regulation only involves an established body of technical regulations for which frequent and routine amendments are necessary to keep them operationally current. It, therefore—(1) is not a ''significant regulatory action'' under Executive Order 12866; (2) is not a ''significant rule'' under DOT Regulatory Policies and Procedures (44 FR 11034; February 26, 1979); and (3)

does not warrant preparation of a regulatory evaluation as the anticipated impact is so minimal. For the same reason, the FAA certifies that this amendment will not have a significant economic impact on a substantial number of small entities under the criteria of the Regulatory Flexibility Act.

List of Subjects in 14 CFR Part 97

Air Traffic Control, Airports, Incorporation by reference, and Navigation (Air).

Issued in Washington, DC on November 16, 2007.

James J. Ballough,

Director, Flight Standards Service.

Adoption of the Amendment

■ Accordingly, pursuant to the authority delegated to me, under Title 14, Code of Federal Regulations, Part 97 (14 CFR part 97) is amended by establishing, amending, suspending, or revoking Standard Instrument Approach Procedures and/or Takeoff Minimums and/or Obstacle Departure Procedures effective at 0901 UTC on the dates specified, as follows:

PART 97—STANDARD INSTRUMENT APPROACH PROCEDURES

■ 1. The authority citation for part 97 continues to read as follows:

Authority: 49 U.S.C. 106(g), 40103, 40106, 40113, 40114, 40120, 44502, 44514, 44701, 44719, 44721–44722.

■ 2. Part 97 is amended to read as follows:

Effective 20 DEC 2007

Phoenix, AZ, Phoenix Sky Harbor Intl, ILS OR LOC RWY 7R, Amdt 1C
Oxnard, CA, Oxnard, ILS RWY 25, Amdt 12
Atlanta, GA, Peachtree City-Falcon Field, RNAV (GPS) RWY 13, Orig
Atlanta, GA, Peachtree City-Falcon Field, RNAV (GPS) RWY 31, Orig
Atlanta, GA, Peachtree City-Falcon Field, VOR/DME RNAV OR GPS RWY 31, Orig-D, (CANCELLED)
Jefferson, GA, Jackson County, RNAV (GPS) RWY 16, Orig-A
Jefferson, GA, Jackson County, RNAV (GPS) RWY 34, Orig-A
Jefferson City, MO, Jefferson City Memorial, RNAV (GPS) RWY 12, Orig
Jefferson City, MO, Jefferson City Memorial, GPS RWY 12, Orig-A, CANCELLED
Mosby, MO, Midwest National Air Center, ILS OR LOC/DME RWY 18, Orig
Mosby, MO, Midwest National Air Center, RNAV (GPS) RWY 18, Amdt 1
Mosby, MO, Midwest National Air Center, RNAV (GPS) RWY 36, Amdt 1A
Mosby, MO, Midwest National Air Center, NDB RWY 18, Amdt 2, CANCELLED
Mosby, MO, Midwest National Air Center, Takeoff Minimums and Obstacles DP, Amdt 1
Grand Island, NE, Central Nebraska Regional, VOR/DME RWY 31, Amdt 8
Grand Island, NE, Central Nebraska Regional, Takeoff Minimums and Obstacle DP, Orig
Scottsbluff, NE, Western Neb RGNL/William B Heilig Field, ILS OR LOC/DME RWY 12, Orig
Scottsbluff, NE, Western Neb RGNL/William B Heilig Field, RNAV (GPS) RWY 5, Orig
Scottsbluff, NE, Western Neb RGNL/William B Heilig Field, RNAV (GPS) RWY 12, Amdt 1
Scottsbluff, NE, Western Neb RGNL/William B Heilig Field, RNAV (GPS) RWY 23, Orig
Scottsbluff, NE, Western Neb RGNL/William B Heilig Field, RNAV (GPS) RWY 30, Amdt 1
Scottsbluff, NE, Western Neb RGNL/William B Heilig Field, LOC/DME RWY 12, Orig, CANCELLED
Scottsbluff, NE, Western Neb RGNL/William B Heilig Field, VOR/DME RWY 5, Amdt 5
Scottsbluff, NE, Western Neb RGNL/William B Heilig Field, VOR OR TACAN RWY 23, Amdt 12
Manchester, NH, Manchester, RNAV (GPS) RWY 24, Amdt 1
Manchester, NH, Manchester, Takeoff Minimums and Obstacle DP, Amdt 7
Jackson, OH, James A. Rhodes, Takeoff Minimums and Obstacle Departure, Amdt 4
Bartlesville, OK, Bartlesville Muni, RNAV (GPS) RWY 17, Orig
Bartlesville, OK, Bartlesville Muni, RNAV (GPS) RWY 35, Orig
Bartlesville, OK, Bartlesville Muni, LOC RWY 17, Amdt 3
Bartlesville, OK, Bartlesville Muni, VOR/DME RWY 35, Amdt 6
Bartlesville, OK, Bartlesville Muni, VOR RWY 17, Amdt 11
Bartlesville, OK, Bartlesville Muni, GPS RWY 17, Orig-B, CANCELLED
Bartlesville, OK, Bartlesville Muni, GPS RWY 35, Orig-B, CANCELLED
Bartlesville, OK, Bartlesville Muni, Takeoff Minimums and Obstacle DP, Orig
Myerstown, PA, Deck, RNAV (GPS) RWY 19, Orig-A
Somerset, PA, Somerset County, RNAV (GPS) RWY 7, Orig
Somerset, PA, Somerset County, RNAV (GPS) RWY 25, Orig
Somerset, PA, Somerset County, GPS RWY 7, Orig-B, CANCELLED
Somerset, PA, Somerset County, GPS RWY 25, Orig-B, CANCELLED
Somerset, PA, Somerset County, Takeoff Minimums and Obstacle DP, Amdt 2
Newport, RI, Newport State, Takeoff Minimums and Obstacle DP, Amdt 3
Arlington, TX, Arlington Muni, ILS OR LOC/DME RWY 34, Orig
Dallas-Fort Worth, TX, Dallas-Fort Worth Intl, Converging ILS RWY 17C, Amdt 6
Dallas-Fort Worth, TX, Dallas-Fort Worth Intl, Converging ILS RWY 17R, Amdt 8
Dallas-Fort Worth, TX, Dallas-Fort Worth Intl, Converging ILS RWY 18L, Amdt 1
Dallas-Fort Worth, TX, Dallas-Fort Worth Intl, Converging ILS Y RWY 18L, Orig-A, CANCELLED
Dallas-Fort Worth, TX, Dallas-Fort Worth Intl, Converging ILS RWY 18R, Amdt 5
Dallas-Fort Worth, TX, Dallas-Fort Worth Intl, Converging ILS RWY 35C, Amdt 1
Dallas-Fort Worth, TX, Dallas-Fort Worth Intl, Converging ILS RWY 35L, Amdt 3
Dallas-Fort Worth, TX, Dallas-Fort Worth Intl, Converging ILS RWY 36L, Amdt 1
Dallas-Fort Worth, TX, Dallas-Fort Worth Intl, Converging ILS RWY 36R, Amdt 2
Dallas-Fort Worth, TX, Dallas-Fort Worth Intl, ILS OR LOC RWY 17C, ILS RWY 17C (CAT II), ILS RWY 17C (CAT III), Amdt 9
Dallas-Fort Worth, TX, Dallas-Fort Worth Intl, ILS OR LOC RWY 17L, ILS RWY 17L (CAT II), ILS RWY 17L (CAT III), Amdt 5
Dallas-Fort Worth, TX, Dallas-Fort Worth Intl, ILS OR LOC RWY 17R, Amdt 22
Dallas-Fort Worth, TX, Dallas-Fort Worth Intl, ILS OR LOC RWY 18L, Amdt 1
Dallas-Fort Worth, TX, Dallas-Fort Worth Intl, ILS OR LOC Y RWY 18L, Orig-A, CANCELLED
Dallas-Fort Worth, TX, Dallas-Fort Worth Intl, ILS OR LOC RWY 18R, ILS RWY 18R (CAT II), ILS RWY (CAT III), Amdt 7
Dallas-Fort Worth, TX, Dallas-Fort Worth Intl, ILS OR LOC RWY 35C, ILS RWY 35C (CAT II), ILS RWY 35C (CAT III), Amdt 1
Dallas-Fort Worth, TX, Dallas-Fort Worth Intl, ILS OR LOC RWY 35L, Amdt 4
Dallas-Fort Worth, TX, Dallas-Fort Worth Intl, ILS OR LOC RWY 35R, ILS RWY 35R (CAT II), ILS RWY 35R (CAT III), Amdt 3
Dallas-Fort Worth, TX, Dallas-Fort Worth Intl, ILS OR LOC RWY 36L, Amdt 1
Dallas-Fort Worth, TX, Dallas-Fort Worth Intl, ILS OR LOC RWY 36R, Amdt 4
Dallas-Fort Worth, TX, Dallas-Fort Worth Intl, RNAV (GPS) RWY 17C, Amdt 1
Dallas-Fort Worth, TX, Dallas-Fort Worth Intl, RNAV (GPS) RWY 17L, Amdt 3
Dallas-Fort Worth, TX, Dallas-Fort Worth Intl, RNAV (GPS) RWY 17R, Amdt 1
Dallas-Fort Worth, TX, Dallas-Fort Worth Intl, RNAV (GPS) RWY 35C, Amdt 2
Dallas-Fort Worth, TX, Dallas-Fort Worth Intl, RNAV (GPS) RWY 35L, Amdt 1
Dallas-Fort Worth, TX, Dallas-Fort Worth Intl, RNAV (GPS) RWY 35R, Amdt 2
Dallas-Fort Worth, TX, Dallas-Fort Worth Intl, RNAV (GPS) RWY 36L, Amdt 1
Dallas-Fort Worth, TX, Dallas-Fort Worth Intl, RNAV (GPS) RWY 36R, Amdt 1

Effective 17 JAN 2008

Jamestown, KY, Russell County, Takeoff Minimums and Obstacle DP, Orig
Tupelo, MS, Tupelo Regional, Takeoff Minimums and Obstacle DP, Orig
The Dalles, OR, Columbia Gorge Rgnl/The Dalles Muni, RNAV (GPS)-A, Orig-A
Greenwood, SC, Greenwood County, Takeoff Minimums and Obstacle DP, Orig
Evanston, WY, Evanston-Uinta County Burns Field, ILS OR LOC/DME RWY 23, Amdt 1
Evanston, WY, Evanston-Uinta County Burns Field, RNAV (GPS) RWY 23, Amdt 4

Effective 14 FEB 2008

Fayette, AL, Richard Arthur Field, RNAV (GPS) RWY 18, Orig
Fayette, AL, Richard Arthur Field, RNAV (GPS) RWY 36, Orig
Fayette, AL, Richard Arthur Field, NDB RWY 18, Amdt 1
Fayette, AL, Richard Arthur Field, Takeoff Minimums and Obstacle DP, Amdt 1
Atwater, CA, Castle, VOR/DME RWY 13, Orig-A, CANCELLED

Monte Vista, CO, Monte Vista Muni, RNAV (GPS)-B, Orig
Monte Vista, CO, Monte Vista Muni, VOR/DME-A, Amdt 3
La Belle, FL, La Belle Muni, RNAV (GPS) RWY 14, Orig
La Belle, FL, La Belle Muni, RNAV (GPS) RWY 32, Orig
La Belle, FL, La Belle Muni, Takeoff Minimums and Obstacle DP, Orig
Taunton, MA, Taunton Muni-King Field, Takeoff Minimums and Obstacle DP, Amdt 2
Buffalo, NY, Buffalo Niagara Intl, NDB RWY 23, Orig, CANCELLED
Plattsburgh, NY, Clinton Co, VOR/DME OR GPS-A, Amdt 2A, CANCELLED
Plattsburgh, NY, Clinton Co, VOR OR GPS RWY 19, Amdt 3A, CANCELLED
Plattsburgh, NY, Clinton Co, ILS RWY 1, Amdt 4B, CANCELLED
Plattsburgh, NY, Clinton Co, Takeoff Minimums and Obstacle DP, Amdt 3, CANCELLED
Barnwell, SC, Barnwell RGNL, NDB RWY 17, Orig, CANCELLED
Charleston, WV, Yeager, Takeoff Minimums and Obstacle DP, Amdt 7

The FAA published an Amendment in Docket No. 30578, Amdt No. 3243 to Part 97 of the Federal Aviation Regulations (Vol 72, FR No. 221, Page 64536; dated November 16, 2007) under section 97.29 effective 20 December 2007, which is hereby rescinded as follows:

Yakima, WA, Yakima Air Terminal/Mcallister Field, ILS RWY 27, Amdt 26D.

[FR Doc. E7–23047 Filed 12–3–07; 8:45 am]

BILLING CODE 4910–13–P

DEPARTMENT OF HEALTH AND HUMAN SERVICES

Food and Drug Administration

21 CFR Parts 210 and 211

[Docket No. 2007N–0280]

Amendment to the Current Good Manufacturing Practice Regulations for Finished Pharmaceuticals

AGENCY: Food and Drug Administration, HHS.

ACTION: Direct final rule.

SUMMARY: The Food and Drug Administration (FDA) is amending certain regulations as the first phase of an incremental approach to modifying the current good manufacturing practice (CGMP) regulations for finished pharmaceuticals. We are amending the regulations to modernize or clarify some of the CGMP requirements, as well as harmonize some of the CGMP requirements with those of other foreign regulators and other FDA regulations. These amendments are also consistent with current industry practice. We are taking this action as part of our continuing effort to revise outdated regulations without diminishing public health protection. We are issuing a direct final rule for this action because FDA expects there will be no significant adverse comments on these amendments. Elsewhere in this issue of the **Federal Register**, we are publishing a companion proposed rule, under our usual notice-and-comment rulemaking procedures, to provide a procedural framework to finalize the rule in the event the agency receives any significant adverse comments and withdraws this direct final rule. The companion proposed rule and direct final rule are substantively identical.

DATES: This rule is effective April 17, 2008. Submit written or electronic comments on or before February 19, 2008. If we receive no significant adverse comments during the specified comment period, we intend to publish a notice in the **Federal Register** no later than March 18, 2008, confirming the effective date of the direct final rule. If we receive any timely significant adverse comments during the comment period, we will publish a notice of significant adverse comment in the **Federal Register** withdrawing this direct final rule before its effective date.

ADDRESSES: You may submit comments, identified by Docket No. 2007N–0280, by any of the following methods:

Electronic Submissions

Submit electronic comments in the following ways:

- Federal eRulemaking Portal: *http://www.regulation.gov*. Follow the instructions for submitting comments.
- Agency Web site: *http://www.fda.gov/dockets/ecomments*. Follow the instructions for submitting comments on the agency Web site.

Written Submissions

Submit written submissions in the following ways:

- FAX: 301–827–6870.
- Mail/Hand delivery/Courier [For paper, disk, or CD–ROM submissions]: Division of Dockets Management (HFA–305), Food and Drug Administration, 5630 Fishers Lane, rm. 1061, Rockville, MD 20852.

To ensure more timely processing of comments, FDA is no longer accepting comments submitted to the agency by e-mail. FDA encourages you to continue to submit electronic comments by using the Federal eRulemaking Portal or the agency Web site, as described previously, in the **ADDRESSES** portion of this document under *Electronic Submissions*.

Instructions: All submissions received must include the agency name and Docket No(s). and Regulatory Information Number (RIN) (if a RIN number has been assigned) for this rulemaking. All comments received may be posted without change to *http://www.fda.gov/ohrms/dockets/default.htm*, including any personal information provided.

For additional information on submitting comments, see the ''Comments'' heading of the **SUPPLEMENTARY INFORMATION** section of this document.

Docket: For access to the docket to read background documents or comments received, go to *http://www.fda.gov/ohrms/dockets/default.htm* and insert the docket number(s), found in brackets in the heading of this document, into the ''Search'' box and follow the prompts and/or go to the Division of Dockets Management, 5630 Fishers Lane, rm. 1061, Rockville, MD 20852.

FOR FURTHER INFORMATION CONTACT:

Mary Malarkey, Center for Biologics Evaluation and Research (HFM–600), Food and Drug Administration, 1401 Rockville Pike, Rockville, MD 20852–1448, 301–827–6190, or

Dennis Bensley, Center for Veterinary Medicine (HFV–140), Food and Drug Administration, 7500 Standish Pl., Rockville, MD 20855, 301–827–6956, or

Frederick Blumenschein, Center for Drug Evaluation and Research (HFD–326), Food and Drug Administration, 11919 Rockville Pike, Rockville, MD 20852, 301–827–9022.

SUPPLEMENTARY INFORMATION:

I. Background

Since the development of the CGMP regulations in 1962, FDA has balanced the need for easily understood minimum standards with the need to encourage innovation and the development of improved manufacturing technologies. We strive to give manufacturers latitude to determine how to achieve the level of control necessary for CGMP compliance, recognizing that, in some instances, more direction from FDA is necessary to provide a uniform standard for the entire industry or because of the potential for harm, or the narrow range of acceptable means to accomplish a particular CGMP objective. FDA periodically reassesses and revises the CGMP regulations to accommodate advances in technology that further safeguard the drug manufacturing process and the public health. As technology and scientific knowledge related to CGMP evolve, so does

understanding of the material, equipment, and process variables, as well as the operational procedures and oversight methods that must be defined and controlled to achieve assurance of drug product quality.

In 1996, as part of this reassessment process, FDA proposed a significant revision to the CGMP regulations for finished pharmaceuticals to clarify certain manufacturing, quality control, and documentation requirements, and to ensure that the regulations more accurately encompass current industry practice (61 FR 20103, May 3, 1996) (1996 proposed rule). Subsequently, as a part of the risk-based pharmaceutical CGMPs for the 21st century initiative, FDA created a CGMP Harmonization Analysis Working Group (CGMP Working Group) to analyze related CGMP requirements in effect in the United States and internationally, including those related to quality systems. The CGMP Working Group compared parts 210 and 211 (21 CFR parts 210 and 211) to the GMPs of the European Union (EU), as well as other FDA regulations (e.g., the Quality Systems Regulation, 21 CFR part 820) to identify the differences and consider the value of supplementing or changing the current regulations. Based on the CGMP Working Group's analysis, we decided to take an incremental approach to modifying parts 210 and 211 (see *http://www.fda.gov/cder/gmp/gmp2004/GMP_finalreport2004.htm#_Toc84065744*).

Because of this change in approach, FDA decided not to finalize the 1996 proposed rule. Therefore, elsewhere in this issue of the **Federal Register**, we are publishing a notice withdrawing the 1996 proposed rule.

This direct final rule is intended to clarify and modernize the CGMP regulations, as well as harmonize the regulations with international GMP requirements and other FDA regulations. This direct final rule represents the first increment of modifications to parts 210 and 211. We believe that these updating changes are noncontroversial.

II. Description of the Direct Final Rule

A. Plumbing

This rule deletes from § 211.48(a) the current requirement of adherence to a specific U.S. Environmental Protection Agency (EPA) water standard and instead simply requires that the plumbing system contain water that is ''safe for human consumption.'' In an effort to improve harmonization with foreign regulations (particularly the European Union and Japan) and to make the U.S. regulation more consistent with that of the United States Pharmacopeia standard, which is satisfied by compliance with the regulations of the European Union (EU) and Japan, this revision requires that water supplied by the plumbing system and used to prepare water for pharmaceutical purposes be ''safe for human consumption,'' and continues the requirement that it ''be supplied under continuous positive pressure in a plumbing system free of defects that could contribute contamination to any drug product.'' Compliance with the standards set forth in the regulations currently prescribed by the EPA would be acceptable under this revision, as would compliance with the standards set forth in the current regulations of the EU or Japan for potable water used to prepare water for pharmaceutical purposes.

B. Aseptic Processing

The current regulations related to aseptic processing have not been updated to reflect current industry standards and practices. In September 2004, we issued ''Guidance for Industry: Sterile Drug Products Produced by Aseptic Processing—Current Good Manufacturing Practice'' (see *http://www.fda.gov/cder/guidance/5882.fnl.htm''*). The issuance of this document was the culmination of several years of work, including soliciting input from external stakeholders, such as described below.

In 2002, we began work on a draft guidance that was intended to replace the 1987 Guideline on Sterile Drug Products Produced by Aseptic Processing. A concept paper was presented to FDA's Advisory Committee on Pharmaceutical Science on October 22, 2002, for comment. Among other things, the Committee recommended that we work with the Pharmaceutical Quality Research Institute (PQRI) for resolution of major issues. The PQRI Aseptic Processing Working Group (Aseptic Processing Working Group), composed of members from FDA, industry, and academia, was formed to provide scientifically based input targeting specific aseptic processing topics (e.g., media fills). PQRI performed a survey of the industry on these topics, the results of which were presented to the Aseptic Processing Working Group for consideration. The Aseptic Processing Working Group also considered scientific publications and other regulatory documents in preparing recommendations concerning specific aseptic processing topics. These recommendations were discussed by the Aseptic Processing Working Group on February 27 and 28, 2003 (*www.pqri.org/commworking/minutes/mtc.asp*) and presented to the Manufacturing Subcommittee of FDA's Advisory Committee on Pharmaceutical Science on May 22, 2003.

In its September 2003, ''Pharmaceutical CGMPs for the 21st Century—A Risk-Based Approach: Second Progress Report and Implementation Plan,'' FDA announced the issuance of the draft guidance. See *http://www.fda.gov/cder/gmp/2ndProgressRept_Plan.htm*. At the time, the agency noted that the guidance was intended to clarify regulatory expectations, including relevant regulatory standards for sterile drug products. FDA believed the guidance would help reduce the incidence of manufacturing problems with sterile drug products and related drug shortages. The guidance was also consistent with agency efforts to harmonize with international regulatory standards and develop more science-based guidance documents. As noted previously, FDA issued the final guidance in September 2004.

After the GMP Harmonization Analysis Working Group completed its formal analysis comparing parts 210 and 211 with the GMPs of the EU as well as with other FDA current good manufacturing practice regulations, it recommended that part 211 be modernized by adding more clarification about aseptic processing in an effort to harmonize with current industry standards and practices. Therefore, we are now amending several regulations related to aseptic processing to clarify the regulatory requirements to reflect currently accepted industry practice as well as, in some cases, to harmonize with international regulatory standards. The revision to § 211.113(b) applies specifically to validation of aseptic processes, but the revisions to the other four sections discussed below apply, as appropriate, to both aseptic and other types of processes and operations. These revisions clarify and reflect longstanding agency interpretation of these regulations and industry practices. The agency notes that these clarifications of the regulations with respect to aseptic processing do not affect the applicability of the final guidance issued in September 2004. The guidance's recommendations on the ways in which manufacturers can satisfy certain aseptic processing regulatory requirements still apply.

Section 211.67(a) *Equipment cleaning and maintenance* is being revised to add the phrase ''and/or sterilized'' after the word ''sanitized'' in the current

regulation. This change updates the terminology to reflect the fact that, in the context of sterile drug products, the appropriate form of sanitization would be sterilization. This is consistent with our interpretation of this regulation for more than 20 years and reflects the currently accepted industry practice.

Section 211.84(d)(6) *Testing and approval or rejection of components* drug product containers, and closures, is being revised to change the phrase ''that is liable to microbiological contamination,'' to ''with potential for microbiological contamination.'' We believe this revision provides additional clarity without changing the meaning or intent of the regulation.

Section 211.94(c) *Drug product containers and closures* is being revised to clarify that validation is required for the processes used to remove pyrogenic properties (depyrogenation processes). The revision reflects currently accepted industry practice and the agency's longstanding interpretation of this regulation. To assure that certain drug products are suitable for their intended use, drug product containers and closures are required to be sterilized and depyrogenated to remove microbial contamination and pyrogens or endotoxin. It has been longstanding industry practice to validate the sterilization and depyrogenation processes used for drug product containers and closures to assure consistent removal of microbial contamination and pyrogens or endotoxin. Lack of evidence of such validation and inadequacies in the validation studies have been cited in FDA actions throughout the years based on this regulation. Accordingly, this rule simply clarifies § 211.94(c) by adding a new sentence at the end which states; ''Such depyrogenation processes shall be validated.''

Paragraph (a) of § 211.110 *Sampling and testing of in-process materials and drug products* is being revised to include bioburden process control procedures and tests, where appropriate. The existing regulation provides five examples of control procedures and tests that must be addressed, where appropriate, to monitor the output and to validate the performance of manufacturing processes that may be responsible for causing variation in the characteristics of in-process material and drug product. The existing regulation also acknowledges that the examples are not an all inclusive list of necessary process control procedures and tests. For in-process materials and drug products that are produced by aseptic processing, testing for bioburden is a well established industry standard to ensure that the finished dosage form will be sterile and that the process is not shifting from established limits that may affect control. The revised regulation will add bioburden testing as the sixth example of process control procedures.

Paragraph (b) of § 211.113 *Control of microbiological contamination* is being revised to include validation of aseptic processes for drug products that are purported to be sterile. The current regulation mentions only validation of sterilization processes, not aseptic processes. Even before 1987, when the Guideline for Sterile Drug Products Produced by Aseptic Processing was issued, industry routinely conducted validation studies that substituted microbiological media for the actual product to demonstrate that its aseptic processes were validated. These parts of validation studies are often referred to as media fills. We believe that this revision clarifies existing practices and serves to harmonize the CGMP requirements with Annex 1 of the EU GMPs, which requires such validation.

C. Asbestos Filters

Our current regulations for filters used in processing liquid injectable products need to be updated. The current regulations require manufacturers, before using asbestos-containing filters, to submit proof to FDA that an alternative filter will or is more likely to result in product contamination. However, we are not aware that asbestos filters are currently commercially manufactured for pharmaceutical use or that they are currently used in the production of pharmaceuticals. Indeed, their use would no longer be considered a good manufacturing practice. Therefore, we are revising §§ 210.3(b)(6) and 211.72 to remove an outdated regulation permitting limited use of asbestos-containing filters. This revision also provides consistency with international standards.

We removed from the definition of ''non-fiber releasing filter,'' the statement that ''All filters composed of asbestos are deemed to be fiber-releasing filters''; because the revised regulation does not permit any use of asbestos-containing filters. Thus, this sentence is no longer necessary. Because other nonasbestos, fiber-releasing filters may still be used, the revised regulation retains the current requirement that allows the use of fiber-releasing filters only when necessary, and only if another filter is also used specifically to reduce the amount of shed fibers in the finished pharmaceutical.

It is noteworthy that the current CGMP regulation at paragraph (a) of § 211.65 *Equipment construction*, requires equipment, including filters, to be constructed so that ''surfaces that contact components, in-process materials, or drug products shall not be reactive, additive, or absorptive so as to alter the safety, identity, strength, quality, or purity of the drug product beyond the official or other established requirements.'' We are not changing this requirement, which also restricts the amount and type of objectionable particulates in drug products resulting from contact with equipment.

D. Verification by Second Individual

Under the current CGMP regulations, several regulations include requirements that certain activities be performed by one person and checked as specified by a second person. Section 211.101(c) requires that each container of component dispensed for use in manufacturing be examined by a second person to assure that it was released by the quality control unit, that the weight or measure is correct as stated in the batch production records, and that the containers are properly identified. Section 211.101(d) requires that each component shall be added to the batch by one person and verified by a second person. Section 211.103 requires that specified yield calculations shall be performed by one person and independently verified by a second person. Section 211.182 requires that the persons performing and double-checking the cleaning and maintenance of major equipment shall date and sign or initial equipment logs indicating that the work was performed. Finally, § 211.188(b)(11) requires that batch production and control records shall include identification of the persons performing and directly supervising or checking each significant step in the operation.

When the CGMP regulations were amended in 1978, FDA issued § 211.68, which provides that automatic, mechanical, or electronic equipment or other types of equipment, including computers, or related systems that will perform a function satisfactorily, may be used in the manufacture, processing, packing, and holding of a drug product, subject to certain requirements that the controls used are designed to assure proper performance of such equipment, to assure that changes to records are made only by authorized personnel, to check the input and output for accuracy, and to provide for appropriate backup of data.

FDA has periodically been asked whether the requirements for

verification by a second individual in §§ 211.101(c) and (d), 211.103, 211.182, and 211.188(b)(11) are applicable in situations where operations are performed by various types of automated equipment rather than by an individual. When these regulations were adopted in 1978, the preamble addressed this issue in response to several comments about the second checking requirements of § 211.101 for charge-in of components when automated systems are used. We specifically noted that the use of automated systems is permitted under section 211.68 and that the requirement of 211.101 would be met if the second individual verifies that the automated system is working properly (43 FR 45013 to 45087 at 45051, September 29, 1978). Thus, in this situation, the first individual is replaced by a machine or other automated process, and only one person is necessary to verify that the automated system is functioning as intended.

Due to periodic questions received by FDA about the performance and checking requirements required by §§ 211.101(c) and (d), 211.103, 211.182, and 211.188(b)(11) when the operations are performed by automated equipment, such as the widespread and increasing use of computer-controlled operations, we are revising these sections. The revisions will clarify our long-standing interpretation and policy that verification by a second individual may not be necessary when automatic equipment is used under § 211.68. Rather, in these situations, only one person is needed to verify that the automated equipment is functioning adequately. In cases where there is an operator for the automated equipment, the verifying individual may be, but is not required to be, the operator.

Thus, we are amending §§ 211.101(c) and (d), 211.103, 211.182, and 211.188(b)(11) to indicate that the use of automated equipment under § 211.68 may eliminate the need for verification by a second individual and that in those situations only one person is needed to verify that the automated equipment is functioning properly. In addition, we are amending section 211.68 to provide a consistent clarification of this point.

E. Miscellaneous Minor Changes Based on 1996 Proposal

We are revising § 211.82(b) by replacing the phrase ''as appropriate'' by the phrase ''whichever is appropriate'' to eliminate any ambiguity in the regulation and to emphasize that it is, in fact, accepted industry practice to conduct some testing or examination before the components, drug product containers, or closures are released from quarantine.

We are revising § 211.84(c)(1) by replacing the phrases ''where necessary, by appropriate means'' with ''when necessary in a manner to prevent introduction of contaminants into the component.'' This change will clarify that the act of cleaning is done for a particular purpose, to prevent the introduction of contaminants, and must be done unless such cleaning is not necessary to prevent such an introduction of contaminants.

In addition, two editorial changes are being made to § 211.84(d)(3) by replacing the word ''conformance'' with ''conformity'' and ''procedure'' with ''specifications.'' Similarly, two minor editorial changes are being made to the first sentence of § 211.160(b)(1) by replacing the word ''conformance'' with ''conformity'' and ''appropriate'' with ''applicable.'' We believe that these revisions provide clarity without changing the meaning or intent of the regulations.

III. Direct Final Rulemaking

In the **Federal Register** of November 21, 1997 (62 FR 62466), FDA published a notice of availability of a guidance document that explains when and how we intend to employ direct final rulemaking. We have determined that this rule is appropriate for direct final rulemaking because we believe that it includes only noncontroversial amendments and we anticipate no significant adverse comments. Consistent with our procedures on direct final rulemaking, FDA is publishing elsewhere in this issue of the **Federal Register** a companion proposed rule to revise the CGMP regulations for finished pharmaceuticals. The companion proposed rule provides a procedural framework within which the rule may be finalized in the event that the direct final rule is withdrawn as a result of any significant adverse comments. The comment period for the direct final rule runs concurrently with the companion proposed rule. Any comments received in response to either of these rules will be considered as comments to the other.

We are providing a comment period on the direct final rule of 75 days after the date of the publication in the **Federal Register**. If we receive any significant adverse comments, we intend to withdraw this direct final rule before its effective date by publication of a notice in the **Federal Register**. A significant adverse comment is defined as a comment that explains why the rule would be inappropriate, including challenges to the rule's underlying premise or approach, or would be ineffective or unacceptable without a change. In determining whether an adverse comment is significant and warrants terminating a direct final rulemaking, we will consider whether the comment raises an issue serious enough to warrant a substantive response in a notice-and-comment process in accordance with section 553 of the Administrative Procedure Act (5 U.S.C. 553). Comments that are frivolous, insubstantial, or outside the scope of the rule will not be considered significant or adverse under this procedure. A comment recommending a regulation change in addition to those in the rule would not be considered a significant adverse comment unless the comment states why the rule would be ineffective without the additional change. In addition, if a significant adverse comment applies to an amendment, paragraph, or section of this rule and that provision can be severed from the remainder of the rule, we may adopt as final those provisions of the rule that are not the subjects of a significant adverse comment.

If any significant adverse comments are received during the comment period, FDA will publish, within 30 days after the close of the comment period, a notice of significant adverse comment and will withdraw the direct final rule. If we withdraw the direct final rule, any comments received will be applied to the proposed rule and will be considered in developing a final rule using the usual notice-and-comment procedures.

If FDA receives no significant adverse comments during the specified comment period, FDA intends to publish a document confirming the effective date of the direct final rule within 30 days after the comment period ends.

IV. Analysis of Impacts

A. Review Under Executive Order 12866, the Regulatory Flexibility Act, and the Unfunded Mandates Reform Act of 1995

FDA has examined the impacts of this direct final rule under Executive Order 12866 and the Regulatory Flexibility Act (5 U.S.C. 601–612), and the Unfunded Mandates Reform Act of 1995 (Public Law 104–4). Executive Order 12866 directs agencies to assess all costs and benefits of available regulatory alternatives and, when regulation is necessary, to select regulatory approaches that maximize net benefits (including potential economic, environmental, public health and safety, and other advantages; distributive

impacts; and equity). The agency believes that this direct final rule is not a significant regulatory action as defined by the Executive order, because the rule generally either clarifies the agency's longstanding interpretation of, or increases latitude for manufacturers in complying with, preexisting CGMP requirements. The Regulatory Flexibility Act requires agencies to analyze regulatory options that would minimize any significant impact of a rule on small entities. Because this direct final rule does not impose any new regulatory obligations, the agency certifies that it would not have a significant economic impact on a substantial number of small entities.

Section 202(a) of the Unfunded Mandates Reform Act of 1995 requires that agencies prepare a written statement, which includes an assessment of anticipated costs and benefits, before proposing ''any rule that includes any Federal mandate that may result in the expenditure by State, local, and tribal governments, in the aggregate, or by the private sector, of $100,000,000 or more (adjusted annually for inflation) in any one year.'' The current threshold after adjustment for inflation is $122 million, using the most current (2005) Implicit Price Deflator for the Gross Domestic Product. FDA does not expect this direct final rule to result in any 1-year expenditure that would meet or exceed this amount.

The purpose of this direct final rule is to update the codified language to reflect current practice and to harmonize requirements in the CGMP regulations with international GMP requirements and other FDA regulations. It would not impose any additional requirements; therefore, industry would not incur incremental compliance costs for these changes.

B. Environmental Impact

Issuing these clarifying amendments to the CGMP regulations will not have a significant impact on the human environment. Therefore, an environmental impact statement is not required.

C. Federalism

FDA has analyzed this direct final rule in accordance with the principles set forth in Executive Order 13132. FDA has determined that the rule does not contain policies that have substantial direct effects on the States, on the relationship between the National Government and the States, or on the distribution of power and responsibilities among the various levels of government. Accordingly, the agency has concluded that the rule does not contain policies that have federalism implications as defined in the Executive Order and, consequently, a federalism summary impact statement is not required.

V. Paperwork Reduction Act of 1995

The provisions of this direct final rule contain requirements that were submitted for review and approval to the Director of the Office of Management and Budget (OMB), as required by section 3507(d) of the Paperwork Reduction Act of 1995. The requirements were approved and assigned OMB control number 0910–0139.

VI. Request for Comments

Interested persons may submit to the Division of Dockets Management (see **ADDRESSES**) written or electronic comments regarding this direct final rule. Submit a single copy of electronic comments or two paper copies of any mailed comments, except that any individuals may submit one paper copy. Comments are to be identified with the docket number found in brackets in the heading of this document. Received comments may be seen in the Division of Dockets Management between 9 a.m. and 4 p.m., Monday through Friday.

List of Subjects

21 CFR Part 210

Drugs, Packaging and containers.

21 CFR Part 211

Drugs, Labeling, Laboratories, Packaging and Containers, Prescription drugs, Reporting and recordkeeping requirements, Warehouses.

■ Therefore, under the Federal Food, Drug, and Cosmetic Act and under authority delegated to the Commissioner of Food and Drugs, 21 CFR parts 210 and 211 are amended as follows:

PART 210—CURRENT GOOD MANUFACTURING PRACTICE IN MANUFACTURING, PROCESSING, PACKING, OR HOLDING OF DRUGS; GENERAL

■ 1. The authority citation for 21 CFR part 210 continues to read as follows;

Authority: 21 U.S.C. 321, 351, 352, 355, 360b, 371, 374; 42 U.S.C. 216, 262, 263a, 264.

■ 2. Section 210.3 is amended by revising paragraph (b)(6) to read as follows:

§ 210.3 Definitions.

(b) * * *

(6) *Nonfiber releasing filter* means any filter, which after appropriate pretreatment such as washing or flushing, will not release fibers into the component or drug product that is being filtered.

* * * * *

PART 211—CURRENT GOOD MANUFACTURING PRACTICE FOR FINISHED PHARMACEUTICALS

■ 3. The authority citation for 21 CFR part 211 continues to read as follows:

Authority: 21 U.S.C. 321, 351, 352, 355, 360b, 371, 374; 42 U.S.C. 216, 262, 263a, 264.

■ 4. Section 211.48 is amended by revising paragraph (a) to read as follows:

§ 211.48 Plumbing.

(a) Water supplied by the plumbing system of the facility must be safe for human consumption. This water shall be supplied under continuous positive pressure in a plumbing system free of defects that could contribute contamination to any drug product.

* * * * *

■ 5. Section 211.67 is amended by revising paragraph (a) to read as follows:

§ 211.67 Equipment cleaning and maintenance.

(a) Equipment and utensils shall be cleaned, maintained, and sanitized and/or sterilized at appropriate intervals to prevent malfunctions or contamination that would alter the safety, identity, strength, quality, or purity of the drug product beyond the official or other established requirements.

* * * * *

■ 6. Section 211.68 is amended by adding paragraph (c) to read as follows:

§ 211.68 Automatic, mechanical, and electronic equipment.

* * * * *

(c) Such automated equipment used for performance of operations addressed by §§ 211.101(c) or (d), 211.103, 211.182, or 211.188(b)(11) can satisfy the requirements included in those sections for the performance of an operation by one person and checking by another person if such equipment is used in conformity with this section and one person verifies that the operations addressed in those sections are performed accurately by such equipment.

■ 7. Section 211.72 is revised to read as follows:

§ 211.72 Filters.

Filters for liquid filtration used in the manufacture, processing, or packing of injectable drug products intended for human use shall not release fibers into such products. Fiber-releasing filters may not be used in the manufacture, processing, or packing of these

injectable drug products unless it is not possible to manufacture such drug products without the use of such filters. If use of a fiber-releasing filter is necessary, an additional nonfiber-releasing filter of 0.22 micron maximum mean porosity (0.45 micron if the manufacturing conditions so dictate) shall subsequently be used to reduce the content of particles in the injectable drug product.

■ 8. Section 211.82 is amended by revising paragraph (b) to read as follows:

§ 211.82 Receipt and storage of untested components, drug product containers, and closures.

* * * * *

(b) Components, drug product containers, and closures shall be stored under quarantine until they have been tested or examined, whichever is appropriate, and released. Storage within the area shall conform to the requirements of § 211.80.

■ 9. Section 211.84 is amended by revising paragraphs (c)(1), (d)(3), and (d)(6) to read as follows:

§ 211.84 Testing and approval or rejection of components, drug product containers, and closures.

* * * * *

(c) * * *

(1) The containers of components selected shall be cleaned when necessary in a manner to prevent introduction of contaminants into the component.

* * * * *

(d) * * *

(3) Containers and closures shall be tested for conformity with all appropriate written specifications. In lieu of such testing by the manufacturer, a certificate of testing may be accepted from the supplier, provided that at least a visual identification is conducted on such containers/closures by the manufacturer and provided that the manufacturer establishes the reliability of the supplier's test results through appropriate validation of the supplier's test results at appropriate intervals.

* * * * *

(6) Each lot of a component, drug product container, or closure with potential for microbiological contamination that is objectionable in view of its intended use shall be subjected to microbiological tests before use.

* * * * *

■ 10. Section 211.94 is amended by revising paragraph (c) to read as follows:

§ 211.94 Drug product containers and closures.

* * * * *

(c) Drug product containers and closures shall be clean and, where indicated by the nature of the drug, sterilized and processed to remove pyrogenic properties to assure that they are suitable for their intended use. Such depyrogenation processes shall be validated.

* * * * *

■ 11. Section 211.101 is amended by revising paragraphs (c) and (d) to read as follows:

§ 211.101 Charge-in of components.

* * * * *

(c) Weighing, measuring, or subdividing operations for components shall be adequately supervised. Each container of component dispensed to manufacturing shall be examined by a second person to assure that:

(1) The component was released by the quality control unit;

(2) The weight or measure is correct as stated in the batch production records;

(3) The containers are properly identified. If the weighing, measuring, or subdividing operations are performed by automated equipment under § 211.68, only one person is needed to assure conditions of paragraphs (c)(1), (c)(2), and (c)(3) of this section have been met.

(d) Each component shall either be added to the batch by one person and verified by a second person or, if the components are added by automated equipment under § 211.68, only verified by one person.

■ 12. Section 211.103 is revised to read as follows:

§ 211.103 Calculation of yield.

Actual yields and percentages of theoretical yield shall be determined at the conclusion of each appropriate phase of manufacturing, processing, packaging, or holding of the drug product. Such calculations shall either be performed by one person and independently verified by a second person, or, if the yield is calculated by automated equipment under § 211.68, be independently verified by one person.

■ 13. Section 211.110 is amended by revising paragraph (a) introductory text and by adding paragraph (a)(6) to read as follows:

§ 211.110 Sampling and testing of in-process materials and drug products.

(a) To assure batch uniformity and integrity of drug products, written procedures shall be established and followed that describe the in-process controls, and tests, or examinations to be conducted on appropriate samples of in-process materials of each batch. Such control procedures shall be established to monitor the output and to validate the performance of those manufacturing processes that may be responsible for causing variability in the characteristics of in-process material and the drug product. Such control procedures shall include, but are not limited to, the following, where appropriate:

* * * * *

(6) Bioburden testing.

* * * * *

■ 14. Section 211.113 is amended by revising paragraph (b) to read as follows:

§ 211.113 Control of microbiological contamination.

* * * * *

(b) Appropriate written procedures, designed to prevent microbiological contamination of drug products purporting to be sterile, shall be established and followed. Such procedures shall include validation of all aseptic and sterilization processes.

■ 15. Section 211.160 is amended by revising paragraph (b)(1) to read as follows:

211.160 General requirements.

* * * * *

(b) * * *

(1) Determination of conformity to applicable written specifications for the acceptance of each lot within each shipment of components, drug product containers, closures, and labeling used in the manufacture, processing, packing, or holding of drug products. The specifications shall include a description of the sampling and testing procedures used. Samples shall be representative and adequately identified. Such procedures shall also require appropriate retesting of any component, drug product container, or closure that is subject to deterioration.

* * * * *

■ 16. Section 211.182 is revised to read as follows:

§ 211.182 Equipment cleaning and use log.

A written record of major equipment cleaning, maintenance (except routine maintenance such as lubrication and adjustments), and use shall be included in individual equipment logs that show the date, time, product, and lot number of each batch processed. If equipment is dedicated to manufacture of one product, then individual equipment logs are not required, provided that lots or batches of such product follow in numerical order and are manufactured in numerical sequence. In cases where dedicated equipment is employed, the records of cleaning, maintenance, and

use shall be part of the batch record. The persons performing and double-checking the cleaning and maintenance (or, if the cleaning and maintenance is performed using automated equipment under § 211.68, only the person verifying the cleaning and maintenance done by the automated equipment) shall date and sign or initial the log indicating that the work was performed. Entries in the log shall be in chronological order.

■ 17. Section 211.188 is amended by revising paragraph (b)(11) to read as follows:

§ 211.188 Batch production and control records.

* * * * *

(b) * * *

(11) Identification of the persons performing and directly supervising or checking each significant step in the operation, or if a significant step in the operation is performed by automated equipment under § 211.68, the identification of the person checking the significant step performed by the automated equipment.

* * * * *

Dated: November 26, 2007.

Jeffrey Shuren,

Assistant Commissioner for Policy.

[FR Doc. E7–23294 Filed 12–3–07; 8:45 am]

BILLING CODE 4160–01–S

DEPARTMENT OF VETERANS AFFAIRS

38 CFR Part 17

RIN 2900–AM35

Reasonable Charges for Medical Care or Services

AGENCY: Department of Veterans Affairs.

ACTION: Final rule.

SUMMARY: This final rule amends the Department of Veterans Affairs (VA) medical regulations concerning ''reasonable charges'' for medical care or services provided or furnished by VA to certain veterans for nonservice-connected disabilities. It changes the process for determining interim billing charges when a new Diagnosis Related Group (DRG) code or Current Procedural Terminology/Healthcare Common Procedure Coding System (CPT/HCPCS) code identifier is assigned to a particular type or item of medical care or service and VA has not yet established a charge for the new identifier. This process is designed to provide interim billing charges that are very close to what the new billing charges would be when the charges for the new identifiers are established in accordance with the regulations. This final rule also changes the regulations by removing all of the provisions for discounts of billed charges. This will eliminate or reduce duplicate discounting and thereby prevent unintended underpayments to the government.

DATES: *Effective Date:* January 3, 2008.

FOR FURTHER INFORMATION CONTACT: Romona Greene, Manager of Rates and Charges, VHA Chief Business Office (168), Veterans Health Administration, Department of Veterans Affairs, 810 Vermont Avenue, NW., Washington, DC 20420, (202) 254–0361.

SUPPLEMENTARY INFORMATION: In a document published in the **Federal Register** on February 13, 2007 (72 FR 6696), VA proposed to amend VA's medical regulations that were established under the authority of 38 U.S.C. 1729 and that are set forth in 38 CFR 17.101 (referred to below as ''the regulations''). The regulations establish methodologies for determining reasonable charges for medical care or services provided or furnished by VA to certain veterans. VA proposed to make the changes described in the **SUMMARY** portion of this document.

VA provided a 30-day comment period that ended March 15, 2007. Two comments were received. One comment did not directly express agreement or disagreement with the proposed rule, but provided information about Medicare requirements. We reviewed that information and determined that the proposed rule is consistent with those Medicare provisions. Accordingly, we are making no change from the proposed rule based on that comment. We discuss below the second comment, and include background concerning provisions of the proposed rule related to that comment.

Under the provisions of 38 U.S.C. 1729, VA has the right to recover or collect reasonable charges for such medical care and services from a third party to the extent that the veteran or a provider of the care or services would be eligible to receive payment for:

1. A nonservice-connected disability for which the veteran is entitled to care (or the payment of expenses of care) under a health plan contract;

2. A nonservice-connected disability incurred incident to the veteran's employment and covered under a worker's compensation law or plan that provides reimbursement or indemnification for such care and services; or

3. A nonservice-connected disability incurred as a result of a motor vehicle accident in a State that requires automobile accident reparations (no-fault) insurance.

However, consistent with the statutory authority in 38 U.S.C. 1729(c)(2)(B), a third-party payer liable for such medical care and services under a health plan contract has the option of paying, to the extent of its coverage, either the billed charges or the amount the third-party payer demonstrates it would pay for care or services furnished by providers other than entities of the United States for the same care or services in the same geographic area.

Except for charges for prescription drugs, the regulations were promulgated to describe methodologies for establishing VA charges that replicate, insofar as possible, the 80th percentile of community charges (see the preamble to VA's proposed rule ''Reasonable Charges for Medical Care or Services; 2003 Methodology Changes'' published in the **Federal Register** at 68 FR 56876 (Oct. 2, 2003)). VA's methodologies for determining reasonable charges for prescription drugs are based on VA costs and are described in 38 CFR 17.102.

Prior to the effective date of this final rule, the regulations included provisions for certain discounts to be applied to billed charges. The discounts were intended to reflect industry standards. VA proposed to eliminate discounts for VA billed charges to avoid unintended duplicate discounting. This was necessary because after VA applied discounts to the billed charges, virtually all third party-payers applied the same discounts a second time (discounts are included in industry software), thereby reducing the billed charges below what was intended by the regulations. VA accordingly proposed to make a number of changes to the regulations to eliminate VA discounts, including changing the regulations at § 17.101(f)(5)(ii) to increase the charges for the professional services of the following providers to 100 percent of the amount that would be charged if the care had been provided by a physician:

- Nurse practitioner,
- Clinical nurse specialist,
- Physician Assistant,
- Clinical psychologist,
- Clinical social worker,
- Dietitian, and
- Clinical pharmacist.

The second comment noted that Public Law 109–461 recently added marriage and family therapists to the groups eligible to provide care under the VA healthcare system and requested

that this group be added accordingly to the list in § 17.101(f)(5)(ii). The second comment otherwise fully supported the proposed rule.

Section 201 of Public Law 109–461 amended 38 U.S.C. 7401 and 7402 to add provisions under which qualified marriage and family therapists are identified as eligible to provide care under the VA healthcare system. Section 201 also amended 38 U.S.C. 7401 and 7402 to add provisions under which qualified licensed professional mental health counselors are similarly identified as eligible to provide care under the VA healthcare system. VA has concluded that these statutory provisions make it appropriate to make changes from the proposed rule in the final rule to include provisions concerning both categories: Providers that are marriage and family therapists, and providers that are licensed professional mental health counselors. Third party payers apply discounts from the physician rate for marriage and family therapists and for licensed professional mental health counselors, as third party payers similarly do for the other providers included in the lists in current and proposed § 17.101(f)(5)(ii). Accordingly, after considering the second comment, we are making a change from the proposed rule in the final rule by adding marriage and family therapists and licensed professional mental health counselors to the list of providers in § 17.101(f)(5)(ii). Charges for professional services of the providers included in that list will be 100 percent of the amount that would be charged if the care had been provided by a physician.

This final rule is making other changes from the proposed rule that are nonsubstantive. In the § 17.101(g) introductory paragraph, VA proposed to amend a sentence by removing ''50 percent'' and replacing it with ''100 percent''. That sentence says in the current regulations that certain charges ''will be 50 percent of the charges otherwise determined as set forth in this paragraph.'' This final rule further amends the sentence by removing ''otherwise'' since that term would no longer be needed.

This final rule also makes a nonsubstantive change from the proposed rule's provisions for the authority citation for 38 CFR part 17, so that the final rule will, as intended by the proposed rule, reflect the current language in the part 17 authority citation.

In addition, the final rule makes nonsubstantive changes from the proposed rule for purposes of clarity or grammar. Other than nonsubstantive changes in capitalization or punctuation, those changes from the proposed rule are in § 17.101(a)(8)(i) to refer to ''billing charge'' rather than ''billable charge'', in § 17.101(a)(8)(iii) to refer to ''VA's billing charge'' rather than ''VA's charge'', in § 17.101(a)(8)(vii) to refer to ''the interim charge'' to use the same phrase as in the similar context in paragraphs (a)(8)(iv) and (a)(8)(v) of that section, and in § 17.101(a)(8)(vii) to add for clarity ''under this section'', which is used in the current regulations in the analogous provisions of § 17.101(a)(8)(v) of the regulations but was not in the proposed rule.

Based on the rationale set forth in the proposed rule and in this document, VA is adopting the provisions of the proposed rule as a final rule with the changes discussed above.

Unfunded Mandates

The Unfunded Mandates Reform Act of 1995 requires, at 2 U.S.C. 1532, that agencies prepare an assessment of anticipated costs and benefits before issuing any rule that may result in an expenditure by State, local, and tribal governments, in the aggregate, or by the private sector, of $100 million or more (adjusted annually for inflation) in any given year. This rule would have no such effect on State, local, and tribal governments, or on the private sector.

Paperwork Reduction Act

This document contains no collections of information under the Paperwork Reduction Act (44 U.S.C. 3501–3521).

Executive Order 12866

Executive Order 12866 directs agencies to assess all costs and benefits of available regulatory alternatives and, when regulation is necessary, to select regulatory approaches that maximize net benefits (including potential economic, environmental, public health and safety, and other advantages; distributive impacts; and equity). The Order classifies a rule as a significant regulatory action requiring review by the Office of Management and Budget if it meets any one of a number of specified conditions, including: Having an annual effect on the economy of $100 million or more, creating a serious inconsistency or interfering with an action of another agency, materially altering the budgetary impact of entitlements or the rights of entitlement recipients, or raising novel legal or policy issues. VA has examined the economic, legal, and policy implications of this rule and has concluded that it is a significant regulatory action under Executive Order 12866.

Regulatory Flexibility Act

The Secretary hereby certifies that this rule will not have a significant economic impact on a substantial number of small entities as they are defined in the Regulatory Flexibility Act, 5 U.S.C. 601–612. This rule would affect mainly large insurance companies. The rule might have an insignificant impact on a few small entities that do an inconsequential amount of their business with VA. Accordingly, pursuant to 5 U.S.C. 605(b), this rule is exempt from the initial and final regulatory flexibility analysis requirements of sections 603 and 604.

Catalog of Federal Domestic Assistance

The Catalog of Federal Domestic Assistance numbers and titles for the programs affected by this document are 64.005, Grants to States for Construction of State Home Facilities; 64.007, Blind Rehabilitation Centers; 64.008, Veterans Domiciliary Care; 64.009, Veterans Medical Care Benefits; 64.010, Veterans Nursing Home Care; 64.011, Veterans Dental Care; 64.012, Veterans Prescription Service; 64.013, Veterans Prosthetic Appliances; 64.014, Veterans State Domiciliary Care; 64.015, Veterans State Nursing Home Care; 64.016, Veterans State Hospital Care; 64.018, Sharing Specialized Medical Resources; 64.019, Veterans Rehabilitation Alcohol and Drug Dependence; and 64.022, Veterans Home Based Primary Care.

List of Subjects in 38 CFR Part 17

Administrative practice and procedure, Alcohol abuse, Alcoholism, Claims, Day care, Dental health, Drug abuse, Foreign relations, Government contracts, Grant programs-health, Grant programs-veterans, Health care, Health facilities, Health professions, Health records, Homeless, Medical and dental schools, Medical devices, Medical research, Mental health programs, Nursing homes, Philippines, Reporting and recordkeeping requirements, Scholarships and fellowships, Travel and transportation expenses, Veterans.

Approved: August 27, 2007.

Gordon H. Mansfield,

Deputy Secretary of Veterans Affairs.

■ For the reasons set out in the preamble, VA amends 38 CFR part 17 as set forth below:

PART 17—MEDICAL

■ 1. The authority citation for part 17 continues to read as follows:

Authority: 38 U.S.C. 501, 1721, and as stated in specific sections.

■ 2. Amend § 17.101 by:

■ a. In paragraph (g) introductory text, removing ''50 percent of the charges otherwise'' and adding, in its place, ''100 percent of the charges''.

■ b. Revising paragraphs (a)(8), (e)(5), (f)(4), and (f)(5)(ii).

The revisions read as follows:

§ 17.101 Collection or recovery by VA for medical care or services provided or furnished to a veteran for a nonservice-connected disability.

(a) * * *

(8) *Charges when a new DRG or CPT/HCPCS code identifier does not have an established charge.* When VA does not have an established charge for a new DRG or CPT/HCPCS code to be used in determining a billing charge under the applicable methodology in this section, then VA will establish an interim billing charge or establish an interim charge to be used for determining a billing charge under the applicable methodology in paragraphs (a)(8)(i) through (a)(8)(viii) of this section.

(i) If a new DRG or CPT/HCPCS code identifier replaces a DRG or CPT/HCPCS code identifier, the most recently established charge for the identifier being replaced will continue to be used for determining a billing charge under paragraphs (b), (e), (f), (g), (h), (i), (k), or (l) of this section until such time as VA establishes a charge for the new identifier.

(ii) If medical care or service is provided or furnished at VA expense by a non-VA provider and a charge cannot be established under paragraph (a)(8)(i) of this section, then VA's billing charge for such care or service will be the amount VA paid to the non-VA provider without additional calculations under this section.

(iii) If a new CPT/HCPCS code has been established for a prosthetic device or durable medical equipment subject to paragraph (l) of this section and a charge cannot be established under paragraphs (a)(8)(i) or (ii) of this section, VA's billing charge for such prosthetic device or durable medical equipment will be 1 and ½ times VA's average actual cost without additional calculations under this section.

(iv) If a new medical identifier DRG code has been assigned to a particular type of medical care or service and a charge cannot be established under paragraphs (a)(8)(i) through (iii) of this section, then until such time as VA establishes a charge for the new medical identifier DRG code, the interim charge for use in paragraph (b) of this section will be the average charge of all medical DRG codes that are within plus or minus 10 of the numerical relative weight assigned to the new medical identifier DRG code.

(v) If a new surgical identifier DRG code has been assigned to a particular type of medical care or service and a charge cannot be established under paragraphs (a)(8)(i) through (iv) of this section, then until such time as VA establishes a charge for the new surgical identifier DRG code, the interim charge for use in paragraph (b) of this section will be the average charge of all surgical DRG codes that are within plus or minus 10 of the numerical relative weight assigned to the new surgical identifier DRG code.

(vi) If a new identifier CPT/HCPCS code is assigned to a particular type or item of medical care or service and a charge cannot be established under paragraphs (a)(8)(i) through (v) of this section, then until such time as VA establishes a charge for the new identifier for use in paragraphs (e), (f), (g), (h), (i), (k), or (l) of this section, VA's billing charge will be the Medicare allowable charge multiplied by 1 and ½, without additional calculations under this section.

(vii) If a new identifier CPT/HCPCS code is assigned to a particular type or item of medical care or service and a charge cannot be established under paragraphs (a)(8)(i) through (vi) of this section, then until such time as VA establishes a charge for the new identifier, the interim charge for use in paragraphs (e), (f), (g), (h), (i), (k), or (l) of this section will be the charge for the CPT/HCPCS code that is closest in characteristics to the new CPT/HCPCS code.

(viii) If a charge cannot be established under paragraphs (a)(8)(i) through (a)(8)(vii) of this section, then VA will not charge under this section for the care or service.

* * * * *

(e) * * *

(5) *Multiple surgical procedures.* When multiple surgical procedures are performed during the same outpatient encounter by a provider or provider team as indicated by multiple surgical CPT/HCPCS procedure codes, then each CPT/HCPCS procedure code will be billed at 100 percent of the charges established under this section.

(f) * * *

(4) *Charge adjustment factors for specified CPT/HCPCS code modifiers.* Surcharges are calculated in the following manner: From the Part B component of the Medicare Standard Analytical File 5 percent Sample, the ratio of weighted average billed charges for CPT/HCPCS codes with the specified modifier to the weighted average billed charge for CPT/HCPCS codes with no charge modifier is calculated, using the frequency of procedure codes with the modifier as weights in both weighted average calculations. The resulting ratios constitute the surcharge factors for specified charge-significant CPT/HCPCS code modifiers.

(5) * * *

(ii) *Charges for professional services.* Charges for the professional services of the following providers will be 100 percent of the amount that would be charged if the care had been provided by a physician:

(A) Nurse practitioner.

(B) Clinical nurse specialist.

(C) Physician Assistant.

(D) Clinical psychologist.

(E) Clinical social worker.

(F) Dietitian.

(G) Clinical pharmacist.

(H) Marriage and family therapist.

(I) Licensed professional mental health counselor.

* * * * *

[FR Doc. E7–23505 Filed 12–3–07; 8:45 am]

BILLING CODE 8320–01–P

ENVIRONMENTAL PROTECTION AGENCY

40 CFR Part 52

[EPA–R07–OAR–2007–1055; FRL–8502–2]

Approval and Promulgation of Implementation Plans; State of Missouri; General Conformity

AGENCY: Environmental Protection Agency (EPA).

ACTION: Direct final rule.

SUMMARY: EPA is taking direct final action to approve a revision to the Missouri State Implementation Plan (SIP) to amend the General Conformity Rule to include de minimis emission levels for Particulate Matter 2.5 ($PM_{2.5}$). This update ensures consistency with the Federal General Conformity Rule.

DATES: This direct final rule will be effective February 4, 2008, without further notice, unless EPA receives adverse comment by January 3, 2008. If adverse comment is received, EPA will publish a timely withdrawal of the direct final rule in the **Federal Register** informing the public that the rule will not take effect.

ADDRESSES: Submit your comments, identified by Docket ID No. EPA–R07–OAR–2007–1055, by one of the following methods:

1. *http://www.regulations.gov.* Follow the on-line instructions for submitting comments.

2. *E-mail: shepard.barbara@epa.gov.*

3. *Mail:* Barbara Shepard, Environmental Protection Agency, Region 7, Air Planning and Development Branch, 901 North 5th Street, Kansas City, KS 66101.

4. *Hand Delivery or Courier:* Deliver your comments to Barbara Shepard, Environmental Protection Agency, Region 7, Air Planning and Development Branch, 901 North 5th Street, Kansas City, KS 66101.

Instructions: Direct your comments to Docket ID No. EPA–R07–OAR–2007–1055. EPA's policy is that all comments received will be included in the public docket without change and may be made available online at *http://www.regulations.gov*, including any personal information provided, unless the comment includes information claimed to be Confidential Business Information (CBI) or other information whose disclosure is restricted by statute. Do not submit through *http://www.regulations.gov* or e-mail information that you consider to be CBI or otherwise protected. The *http://www.regulations.gov* Web site is an ''anonymous access'' system, which means EPA will not know your identity or contact information unless you provide it in the body of your comment. If you send an e-mail comment directly to EPA without going through *http://www.regulations.gov*, your e-mail address will be automatically captured and included as part of the comment that is placed in the public docket and made available on the Internet. If you submit an electronic comment, EPA recommends that you include your name and other contact information in the body of your comment and with any disk or CD–ROM you submit. If EPA cannot read your comment due to technical difficulties and cannot contact you for clarification, EPA may not be able to consider your comment. Electronic files should avoid the use of special characters, any form of encryption, and be free of any defects or viruses.

Docket: All documents in the electronic docket are listed in the *http://www.regulations.gov* index. Although listed in the index, some information is not publicly available, i.e., CBI or other information whose disclosure is restricted by statute. Certain other material, such as copyrighted material, is not placed on the Internet and will be publicly available only in hard copy form. Publicly available docket materials are available either electronically in *http://www.regulations.gov* or in hard copy at the Environmental Protection Agency, Region 7, Air Planning and Development Branch, 901 North 5th Street, Kansas City, KS 66101. The Regional Office's official hours of business are Monday through Friday, 8 to 4:30 excluding Federal holidays. The interested persons wanting to examine these documents should make an appointment with the office at least 24 hours in advance.

FOR FURTHER INFORMATION CONTACT: Barbara Shepard at (913) 551–7759, or by e-mail at *shepard.barbara@epa.gov.*

SUPPLEMENTARY INFORMATION: Throughout this document whenever ''we,'' ''us'' or ''our'' is used, we mean EPA. This **SUPPLEMENTARY INFORMATION** section is arranged as follows:

I. General Conformity
II. Background for This Action
III. State Submittal and EPA Evaluation
IV. Public Comment and Final Action
V. Statutory and Executive Order Reviews

I. General Conformity

General conformity is required under section 176(c) of the Clean Air Act (CAA or Act) to prevent the air quality impacts of Federal actions from causing or contributing to a violation of the National Ambient Air Quality Standards (NAAQS) or interfering with the purpose of a SIP. Conformity currently applies to areas that are designated nonattainment, and to certain areas that have been redesignated to attainment after 1990 (maintenance areas).

The general conformity regulation is found in 40 CFR part 93 and provisions related to conformity SIPs are found in 40 CFR 51.390.

II. Background for This Action

In the CAA, Congress recognized that actions taken by Federal agencies could affect states', tribes', and local agencies' abilities to attain and maintain the NAAQS. Section 176(c) of the CAA requires Federal agencies ensure that their actions conform to the applicable SIP for attaining and maintaining the NAAQS. EPA published the General Conformity Regulations in 1993 to cover all Federal actions not related to highway and mass transit funding and approval to implement a portion of section 176(c). The General Conformity Regulations define NAAQS as ''those standards established pursuant to section 109 of the Act and include standards for carbon monoxide, lead, nitrogen dioxide, ozone, particulate matter, and sulfur dioxide.'' Since 1993, EPA has reviewed and revised the NAAQS for particulate matter to include a new $PM_{2.5}$ standard (particulate matter with an aerodynamic diameter of up to 2.5 microns). General conformity requirements are applicable to areas designated nonattainment for this standard, and to certain areas redesignated from nonattainment to attainment (maintenance areas). In July 1997, EPA promulgated a new NAAQS established pursuant to section 109 of the CAA for $PM_{2.5}$. On April 5, 2005, the EPA designated areas as nonattainment for $PM_{2.5}$, and subsequently proposed regulations to implement the new particulate matter standard. Section 176(c)(6) states that the conformity requirements of 176(c) do not apply to an area newly designated nonattainment for a new NAAQS until one year after the designation. The EPA made $PM_{2.5}$ designations on April 5, 2005; thus, the applicable general conformity requirements were not effective in these areas until April 5, 2006. The proposed rule published on April 5, 2006, solicited comments on establishing 100 tons per year of $PM_{2.5}$ direct or precursor emissions as the de minimis threshold for General Conformity applicability.

On July 17, 2006, EPA published a final rule (71 FR 40420), $PM_{2.5}$ De Minimis Emission Levels for General Conformity Applicability, which amended the regulations relating to the CAA requirement that Federal actions conform to the appropriate state, tribal or Federal implementation plan for attaining clean air (''general conformity''). This action revised the tables in subparagraphs (b)(1) and (b)(2) of 40 CFR 51.853 and 40 CFR 93.153 by adding the de minimis emissions levels for $PM_{2.5}$ and established the previously proposed 100 tons per year as the de minimis emission level for direct $PM_{2.5}$ and each of its precursors in nonattainment and maintenance areas.

III. State Submittal and EPA Evaluation

The SIP revision submitted to EPA on September 10, 2007, amends the state rule, Conformity of General Federal Actions to State Implementation Plans (10 Code of State Regulations (CSR) 10–6.300), to be consistent with the Federal conformity requirements described above. This revision added de minimis emissions levels for $PM_{2.5}$ to the state's rule and updated the state's tables for de minimis emissions levels for direct $PM_{2.5}$ and the relevant precursors in nonattainment and maintenance areas.

This Missouri rule implements Section 176(c) of the CAA, as amended (42 U.S.C. 7401–7671q) and regulations under 40 CFR part 51, subpart W, with respect to conformity of general Federal actions to the applicable implementation plan. Missouri rule 10 CSR 10–6.300 at Subsection (2)(B)26.C,

was revised to identify precursors of $PM_{2.5}$ consistent with the Federal rule. The state rule identifies the following precursors: Sulfur dioxide, nitrogen oxides (unless the state and EPA have determined they are not significant precursors), and volatile organic compounds and ammonia (only where the state or EPA has determined they are significant precursors). Rule 10 CSR 10–6.300, Subsection (3)(B) was revised to add a requirement that a conformity determination must be made for each criteria pollutant or precursor where the total of direct and indirect emissions of the criteria pollutant or precursor in a nonattainment or maintenance area caused by a Federal action would equal or exceed any of the rates in paragraph (3)(B)1. or 2. of the rule. Subsection (3)(B) of 10 CSR 10–6.300 revised tables in subparagraphs (B)1. and (B)2. by incorporating the Federally established 100 tons per year as the de minimis emission level for direct $PM_{2.5}$, and each of its precursors in nonattainment and maintenance areas.

The submittal documents public notice and hearing for this SIP revision in compliance with CAA section 110(l) and 40 CFR 51.102.

We have reviewed the submittal to assure consistency with the current CAA, and EPA regulations (40 CFR part 93 and 40 CFR 51.390) governing state procedures for general conformity and interagency consultation and have concluded that the submittal is approvable. Details of our review are set forth in a technical support document, which has been included in the docket for this action.

IV. Public Comment and Final Action

Under section 110(k) of the Act, and for the reasons set forth above, EPA is taking action to approve the revision to the Missouri SIP which adds de minimis emissions levels for $PM_{2.5}$ and precursors, for general conformity purposes.

We do not expect objection to this approval, so we are finalizing it without proposing it in advance. However, in the Proposed Rules section of this **Federal Register**, we are simultaneously proposing approval of the same submittal. If we receive adverse comments by January 3, 2008, we will publish a timely withdrawal in the **Federal Register** to notify the public that the direct final approval will not take effect and we will address the comments in a subsequent final action based on the proposal. If we do not receive timely adverse comments, the direct final approval will be effective without further notice on February 4, 2008. This will incorporate these general conformity procedures into the Federally-enforceable SIP and thereby replace the previous version. Please note that if EPA receives adverse comment on an amendment, paragraph, or section of this rule and if that provision may be severed from the remainder of the rule, EPA may adopt as final those provisions of the rule that are not the subject of an adverse comment.

V. Statutory and Executive Order Reviews

Under Executive Order 12866 (58 FR 51735, October 4, 1993), this action is not a ''significant regulatory action'' and therefore is not subject to review by the Office of Management and Budget. For this reason, this action is also not subject to Executive Order 13211, ''Actions Concerning Regulations That Significantly Affect Energy Supply, Distribution, or Use'' (66 FR 28355, May 22, 2001). This action merely approves state law as meeting Federal requirements and imposes no additional requirements beyond those imposed by state law. Accordingly, the Administrator certifies that this rule will not have a significant economic impact on a substantial number of small entities under the Regulatory Flexibility Act (5 U.S.C. 601 *et seq.*). Because this rule approves pre-existing requirements under state law and does not impose any additional enforceable duty beyond that required by state law, it does not contain any unfunded mandate or significantly or uniquely affect small governments, as described in the Unfunded Mandates Reform Act of 1995 (Pub. L. 104–4).

This rule also does not have tribal implications because it will not have a substantial direct effect on one or more Indian tribes, on the relationship between the Federal Government and Indian tribes, or on the distribution of power and responsibilities between the Federal Government and Indian tribes, as specified by Executive Order 13175 (65 FR 67249, November 9, 2000). This action also does not have Federalism implications because it does not have substantial direct effects on the States, on the relationship between the national government and the States, or on the distribution of power and responsibilities among the various levels of government, as specified in Executive Order 13132 (64 FR 43255, August 10, 1999). This action merely approves state law implementing a Federal standard, and does not alter the relationship or the distribution of power and responsibilities established in the CAA. This rule also is not subject to Executive Order 13045 ''Protection of Children from Environmental Health Risks and Safety Risks'' (62 FR 19885, April 23, 1997), because it approves a state rule implementing a Federal standard.

In reviewing SIP submissions, EPA's role is to approve state choices, provided that they meet the criteria of the CAA. In this context, in the absence of a prior existing requirement for the State to use voluntary consensus standards (VCS), EPA has no authority to disapprove a SIP submission for failure to use VCS. It would thus be inconsistent with applicable law for EPA when it reviews a SIP submission to use VCS in place of a SIP submission that otherwise satisfies the provisions of the CAA. Thus, the requirements of section 12(d) of the National Technology Transfer and Advancement Act of 1995 (15 U.S.C. 272 note) do not apply. This rule does not impose an information collection burden under the provisions of the Paperwork Reduction Act of 1995 (44 U.S.C. 3501 *et seq.*).

The Congressional Review Act, 5 U.S.C. 801 *et seq.*, as added by the Small Business Regulatory Enforcement Fairness Act of 1996, generally provides that before a rule may take effect, the agency promulgating the rule must submit a rule report, which includes a copy of the rule, to each House of the Congress and to the Comptroller General of the United States. EPA will submit a report containing this rule and other required information to the U.S. Senate, the U.S. House of Representatives, and the Comptroller General of the United States prior to publication of the rule in the **Federal Register**. A major rule cannot take effect until 60 days after it is published in the **Federal Register**. This action is not a ''major rule'' as defined by 5 U.S.C. 804(2).

Under section 307(b)(1) of the CAA, petitions for judicial review of this action must be filed in the United States Court of Appeals for the appropriate circuit by *February 4, 2008.* Filing a petition for reconsideration by the Administrator of this final rule does not affect the finality of this rule for the purposes of judicial review nor does it extend the time within which a petition for judicial review may be filed, and shall not postpone the effectiveness of such rule or action. This action may not be challenged later in proceedings to enforce its requirements. (See section 307(b)(2).)

List of Subjects in 40 CFR Part 52

Environmental protection, Air pollution control, Carbon monoxide, Incorporation by reference, Intergovernmental relations, Nitrogen dioxide, Ozone, Particulate matter,

Reporting and recordkeeping requirements, Volatile organic compounds.

Dated: November 26, 2007.

William Rice,

Acting Regional Administrator, Region 7.

■ Chapter I, Title 40 of the Code of Federal Regulations is amended as follows:

PART 52—[AMENDED]

■ 1. The authority citation for part 52 continues to read as follows:

Authority: 42 U.S.C. 7401 *et seq.*

Subpart AA—Missouri

■ 2. In § 52.1320 the table in paragraph (c) is amended by revising the entry for 10–6.300 under Chapter 6 to read as follows:

§ 52.1320 Identification of Plan.

* * * * *

(c) * * *

EPA-APPROVED MISSOURI REGULATIONS

Missouri citation	Title	State effective date	EPA approval date	Explanation
	Missouri Department of Natural Resources			
*	* * * *	*	*	*
Chapter 6—Air Quality Standards, Definitions, Sampling and Reference Methods, and Air Pollution Control Regulations for the State of Missouri				
*	* * * *	*	*	*
10–6.300	Conformity of General Federal Actions to State Implementation Plans.	9/30/07	12/04/07 [*insert FR page number where the document begins*].	
*	* * * *	*	*	*

* * * * *

[FR Doc. E7–23484 Filed 12–3–07; 8:45 am]

BILLING CODE 6560–50–P

ENVIRONMENTAL PROTECTION AGENCY

40 CFR Part 300

[EPA–R04–SFUND–2007–0719; FRL–8501–8]

National Oil and Hazardous Substances Pollution Contingency Plan; National Priorities List

AGENCY: Environmental Protection Agency.

ACTION: Direct final notice of deletion of the Standard Auto Bumper Site from the National Priorities List; correction.

SUMMARY: This document corrects the direct final notice of deletion of the Standard Auto Bumper Site from the National Priorities List, published in the **Federal Register** of August 27, 2007. This correction clarifies that all Institutional Controls (ICs) are in place and recorded at the site.

DATES: Effective December 4, 2007.

FOR FURTHER INFORMATION CONTACT: Michael Taylor, Remedial Project Manager, Superfund Division, U.S. Environmental Protection Agency, Region 4, 61 Forsyth Street, SW., Atlanta, Georgia 30303–8960, Phone: (404) 562–8762, Electronic Mail: *taylor.michael@epa.gov*

Correction

In the direct final notice of deletion FRL–8458–7, beginning on page 48942 in the issue of August 27, 2007, make the following correction in the Basis for Site Deletion section, under Response Actions. On page 48945 in the second column, the first paragraph is corrected to read as follows:

All institutional controls (ICs) are in place and recorded at the site. All appropriate Fund-financed response under CERCLA has been implemented. No further response action is necessary.

Dated: November 13, 2007.

J.I. Palmer, Jr.,

Regional Administrator, Region 4.

[FR Doc. E7–23499 Filed 12–3–07; 8:45 am]

BILLING CODE 6560–50–P

DEPARTMENT OF HEALTH AND HUMAN SERVICES

Centers for Medicare & Medicaid Services

42 CFR Parts 411 and 424

[CMS–1810–CN2]

RIN 0938–AK67

Medicare Program, Physicians' Referrals to Health Care Entities With Which They Have Financial Relationships (Phase III), Correction

AGENCY: Centers for Medicare & Medicaid Services (CMS), HHS.

ACTION: Correction of final rule.

SUMMARY: This document corrects technical and typographical errors that appeared in the final rule published in the **Federal Register** on September 5, 2007 entitled ''Medicare Program, Physicians'' Referrals to Health Care Entities With Which They Have Financial Relationships (Phase III).''

DATES: *Effective Date:* December 4, 2007.

FOR FURTHER INFORMATION CONTACT: Lisa Ohrin, (410) 786–4565.

SUPPLEMENTARY INFORMATION:

I. Background

In FR Doc. 07–4252 of September 5, 2007 (72 FR 51012), there were a

number of technical and typographical errors that are identified and corrected in the Correction of Errors section below. The provisions of this correction notice are effective as if they had been included in the final rule published September 5, 2007. Accordingly, the corrections are effective December 4, 2007.

II. Correction of Errors

In FR Doc. 07–4252 of September 5, 2007 (72 FR 51012), make the following corrections:

A. Corrections to the Preamble

1. On page 51016, 3rd column, 2nd full paragraph, lines 18 and 19, the phrase ''productivity bonus or profit share consistent with the special rules'' is corrected to read ''productivity bonus consistent with the special rules''.

2. On page 51018, 1st column, 3rd full paragraph, line 11, the phrase ''other entity.'' is corrected to read ''other entity).''.

3. On page 51019,

a. First column, 1st partial paragraph,

(1) Line 6, the phrase ''proposed rulemaking, we proposed to'' is corrected to read, ''proposed rulemaking (72 FR 42628), we proposed to''.

(2) Line 11, the phrase '' services', '' is corrected to read '' services,' ''.

b. Third column, 1st full paragraph, line 12 the phrase ''personally refills an implanted pump ''is corrected to read ''personally refills an implantable pump''.

4. On page 51021, 2nd column, 1st partial paragraph, line 2, the phrase ''requirements of a consultation) are not'' is corrected to read ''requirements of a consultation) is not''.

5. On page 51024, 3rd column, 1st partial paragraph, line 46, the phrase ''every 3-years'' is corrected to read ''every 3 years''.

6. On page 51025, 2nd column, 2nd full paragraph, lines 13 and 14, the phrase ''current 90-days'' is corrected to read ''current 90 days''.

7. On page 51028, 1st column,

a. First full paragraph, lines 21 and 22, the phrase ''such arrangements would have been analyzed under the as'' is corrected to read ''such arrangements would have been analyzed as''.

b. Second full paragraph, line 24, the phrase ''market value arrangement) under'' is corrected to read ''market value compensation arrangement) under''.

8. On page 51032, 3rd column,

a. First full paragraph, line 3, the phrase ''at least 8 hour'' is corrected to read ''at least 8 hours''.

b. Fifth paragraph, lines 8 and 9, the phrase ''The in-office ancillary exception'' is corrected to read ''The in-office ancillary services exception''.

9. On page 51033, 2nd column, 1st full paragraph, lines 11 and 12, the phrase ''ordering, or by a member of the group practice when furnished,'' with ''ordering the DHS, or by a member of the group practice when the DHS is furnished,''.

10. On page 51035, 1st column, 4th paragraph, line 14, the phrase ''group practice; or by an entity that is'' is corrected to read ''group practice; or an entity that is''.

11. On page 51037, 1st column, 1st partial paragraph, lines 4 and 5, the phrase ''furnished by the academic medical center'' is corrected to read ''furnished by the academic medical center as the result of a referral from that physician''.

12. On page 51043, 1st column, 3rd full paragraph, lines 4 and 5, the citation ''(69 FR 16084–81605)'' is corrected to read ''(69 FR 16084–16085)''.

13. On page 51050, 3rd column, 2nd full paragraph, lines 4 through 7, the phrase ''people reside in the ''hole'' zip code, the hospital may recruit a physician to establish a practice into the ''hole'' zip code.'' is corrected to read ''inpatients reside in the ''hole'' zip code, the hospital may recruit a physician to establish a practice in the ''hole'' zip code''.

14. On page 51055, 1st column, 1st partial paragraph, line 23, the phrase ''within 6-months'' is corrected to read ''within 6 months''.

15. On page 51058,

a. First column, 4th paragraph,

(1) Line 13, the figure ''CY–2005'' is corrected to read ''CY 2005''

(2) Line 14, the phrase ''CY–2006, and $329 for CY–2007.'' is corrected to read ''CY 2006, and $329 for CY 2007.''.

b. Third column, 1st full paragraph, line 2, the figure ''CY–2007)'' is corrected to read ''CY 2007)''.

16. On page 51062, 3rd column, first full paragraph,

a. Lines 26 through 32, the phrase ''created by virtue of the ownership interest that does not meet an ownership exception (which, thus, creates a compensation arrangement), in the chain of relationships that runs: hospital-radiology venture-physicians.'' is corrected to read ''created by virtue of the chain of relationships that runs: hospital (contracts with) radiology venture (owned by) physicians.''

b. Lines 36 through 38, the phrase ''With respect to the second indirect compensation arrangement, the inquiry would be whether the compensation'' is corrected to read ''The inquiry would be whether the compensation''.

17. On page 51063, second column, third full paragraph, line 16, the citation ''§ 411.355(q)'' is corrected to read ''§ 411.357(q)''.

18. On page 51064, 1st column, fourth full paragraph, lines 2 and 3, the phrase ''the entitys *bona fide* medical staff or in the entitys local'' is corrected to read ''the entity's *bona fide* medical staff or in the entity's local''.

19. On page 51066, 2nd column, 1st full paragraph, lines 23 through 28, the sentence ''(We note that the exception for retention payments applies to federally qualified health centers and rural health clinics in the same manner as it applies to hospitals.)'' is corrected to read ''(We note that the exception for retention payments applies to remuneration provided by federally qualified health centers and rural health clinics in the same manner as it applies to remuneration provided by hospitals.)''.

20. On page 51068, 1st column, the section heading ''*U. Community-Wide Health Information System*'' is corrected to read ''*U. Community-Wide Health Information Systems*''.

B. Corrections to the Regulations Text

1. On page 51087, 3rd column, 3rd full paragraph, lines 8 through 11, the phrase ''For purposes of applying the exceptions in § 411.355 and § 411.357 to arrangements described in paragraphs (c)(1)(i) and (c)(2)(i),'' is corrected to read ''For purposes of applying the exceptions in § 411.355 and § 411.357 to arrangements in which a physician stands in the shoes of his or her physician organization,''.

2. On page 51091, 1st column, 9th full paragraph, line 5, the phrase ''claims submission;'' is corrected to read ''claims submission.''

3. On page 51093, 2nd column, 9th full paragraph, lines 2 through 4, the phrase ''paragraph (e)(1) is also signed by the party to whom the payments are directly made.'' is corrected to read ''paragraph (e)(1) is also signed by the physician practice.''

4. On page 51094, 2nd column, 8th full paragraph, line 5, the phrase ''specifically addressed by another'' is corrected to read ''specifically excepted by another''.

5. On page 51096, 2nd column,

a. Eleventh paragraph, 1st line, the phrase ''(C) A certification that the future'' is corrected to read ''(C) A statement that the future''.

b. Twelfth paragraph, line 2, the phrase ''anticipates relocating his or medical'' is corrected to read ''anticipates relocating his or her medical''.

II. Waiver of Proposed Rulemaking and 30-Day Delay in the Effective Date

We ordinarily publish a notice of proposed rulemaking in the **Federal Register** to provide a period for public comment before the provisions of a rule take effect in accordance with section 553(b) of the Administrative Procedure Act (APA) (5 U.S.C. 553(b)). However, we can waive this notice and comment procedure if the Secretary finds, for good cause, that the notice and comment process is impracticable, unnecessary, or contrary to the public interest, and incorporates a statement of the finding and the reasons therefore in the notice.

Section 553(d) of the APA ordinarily requires a 30-day delay in effective date of final rules after the date of their publication in the **Federal Register**. This 30-day delay in effective date can be waived, however, if an agency finds for good cause that the delay is impracticable, unnecessary, or contrary to the public interest, and the agency incorporates a statement of the findings and its reasons in the rule issued.

Therefore, for reasons noted below, we find good cause to waive proposed rulemaking and the 30-day delayed effective date for the corrections in this notice. This notice merely corrects typographical and technical errors in the preamble and regulations text of the September 5, 2007 final rule and does not make substantive changes to the policies that were adopted in the final rule. Therefore, we find that undertaking further notice and comment procedures to incorporate these corrections into the final rule and delaying the effective date of these changes is unnecessary and contrary to the public interest.

(Catalog of Federal Domestic Assistance Program No. 93.773, Medicare—Hospital Insurance, and Program No. 93.774, Medicare—Supplementary Medical Insurance Program)

Dated: November 27, 2007.

Ann C. Agnew,

Executive Secretary to the Department.

[FR Doc. 07–5905 Filed 11–30–07; 8:45 am]

BILLING CODE 4120–01–P

DEPARTMENT OF HEALTH AND HUMAN SERVICES

Centers for Medicare & Medicaid Services

42 CFR Parts 431, 440, and 441

[CMS–2237–IFC]

RIN 0938–AO50

Medicaid Program; Optional State Plan Case Management Services

AGENCY: Centers for Medicare & Medicaid Services (CMS), HHS.

ACTION: Interim final rule with comment period.

SUMMARY: This interim final rule with comment period revises current Medicaid regulations to incorporate changes made by section 6052 of the Deficit Reduction Act of 2005. In addition, it incorporates provisions of the Consolidated Omnibus Budget Reconciliation Act of 1985, the Omnibus Budget Reconciliation Act of 1986, the Tax Reform Act of 1986, the Omnibus Budget Reconciliation Act of 1987, and the Technical and Miscellaneous Revenue Act of 1988, concerning case management and targeted case management services. This interim final rule with comment period will provide for optional coverage of case management services or targeted case management services furnished according to section 1905(a)(19) and section 1915(g) of the Social Security Act. This interim final rule with comment period clarifies the situations in which Medicaid will pay for case management activities and also clarifies when payment will not be consistent with proper and efficient operation of the Medicaid program, and is not available.

DATES: *Effective Date:* The effective date of this rule is March 3, 2008.

Comment date: To be assured consideration, comments must be received at one of the addresses provided below, no later than 5 p.m. on February 4, 2008.

ADDRESSES: In commenting, please refer to file code CMS–2237–IFC. Because of staff and resource limitations, we cannot accept comments by facsimile (FAX) transmission.

You may submit comments in one of four ways (no duplicates, please):

1. *Electronically.* You may submit electronic comments on specific issues in this regulation to *http://www.cms.hhs.gov/eRulemaking.* Click on the link ''Submit electronic comments on CMS regulations with an open comment period.'' (Attachments should be in Microsoft Word, WordPerfect, or Excel; however, we prefer Microsoft Word.)

2. *By regular mail.* You may mail written comments (one original and two copies) to the following address ONLY: Centers for Medicare & Medicaid Services, Department of Health and Human Services, *Attention:* CMS–2237–IFC, P.O. Box 8016, Baltimore, MD 21244–8016.

Please allow sufficient time for mailed comments to be received before the close of the comment period.

3. *By express or overnight mail.* You may send written comments (one original and two copies) to the following address ONLY: Centers for Medicare & Medicaid Services, Department of Health and Human Services, *Attention:* CMS–2237–IFC, Mail Stop C4–26–05, 7500 Security Boulevard, Baltimore, MD 21244–1850.

4. *By hand or courier.* If you prefer, you may deliver (by hand or courier) your written comments (one original and two copies) before the close of the comment period to one of the following addresses. If you intend to deliver your comments to the Baltimore address, please call telephone number (410) 786–7195 in advance to schedule your arrival with one of our staff members. Room 445–G, Hubert H. Humphrey Building, 200 Independence Avenue, SW., Washington, DC 20201; or 7500 Security Boulevard, Baltimore, MD 21244–1850.

(Because access to the interior of the HHH Building is not readily available to persons without Federal Government identification, commenters are encouraged to leave their comments in the CMS drop slots located in the main lobby of the building. A stamp-in clock is available for persons wishing to retain a proof of filing by stamping in and retaining an extra copy of the comments being filed.)

Comments mailed to the addresses indicated as appropriate for hand or courier delivery may be delayed and received after the comment period.

For information on viewing public comments, see the beginning of the **SUPPLEMENTARY INFORMATION** section.

FOR FURTHER INFORMATION CONTACT: Jean Close, (410) 786–5831.

SUPPLEMENTARY INFORMATION:

Submitting Comments: We welcome comments from the public on all issues set forth in this rule to assist us in fully considering issues and developing policies. You can assist us by referencing the file code CMS–2237–IFC and the specific ''issue identifier'' that precedes the section on which you choose to comment.

Inspection of Public Comments: All comments received before the close of the comment period are available for viewing by the public, including any personally identifiable or confidential business information that is included in a comment. We post all comments received before the close of the comment period on the following Web site as soon as possible after they have been received: *http://www.cms.hhs.gov/eRulemaking.* Click on the link ''Electronic Comments on CMS Regulations'' on that Web site to view public comments.

Comments received timely also will be available for public inspection as they are received, generally beginning approximately 3 weeks after publication of a document, at the headquarters of the Centers for Medicare & Medicaid Services, 7500 Security Boulevard, Baltimore, Maryland 21244, Monday through Friday of each week from 8:30 a.m. to 4 p.m. To schedule an appointment to view public comments, phone 1–800–743–3951.

I. Background

[If you choose to comment on issues in this section, please include the caption ''Background'' at the beginning of your comments.]

Case management is commonly understood to be an activity that assists individuals in gaining access to necessary care and services appropriate to their needs. Many individuals, because of their age, condition, illness, living arrangement, or other factors, may benefit from receiving direct assistance in gaining access to services. In the context of this regulation, it is the individual's access to care and services that is the subject of this management—not the individual. Because case management has been subject to so many different interpretations over the years, many Medicaid agencies now refer to case management as ''care management,'' ''service coordination,'' ''care coordination'' or some other term related to planning and coordinating access to health care and other services on behalf of an individual. Because section 1915 of the Social Security Act (the Act) uses the term ''case management,'' we will use this term throughout this document.

In 1981, the Congress amended the Act to authorize Medicaid coverage of case management services under two provisions. Under section 1915(b) of the Act, States were authorized to develop primary care case management systems in order to direct individuals to appropriate Medicaid services. Under section 1915(c) of the Act, States were authorized to furnish case management as a distinct service under home and community-based services waivers. Case management is widely used under both authorities because of its value in ensuring that individuals receiving Medicaid benefits are assisted in making necessary decisions about the care they need and in locating service providers.

The regulations set forth in this interim final regulation implement in 42 CFR parts 431, 440, and 441 the case management services provisions authorized by sections 1905(a)(19) of the Act and 1915(g) of the Act. The definition of case management in the Deficit Reduction Act was effective on January 1, 2006. The provisions of this rule are effective 90 days after the date of publication of this rule.

II. Legislative History

A. Changes Made by the Consolidated Omnibus Budget Reconciliation Act of 1985

Section 9508 of the Consolidated Omnibus Budget Reconciliation Act of 1985 (COBRA) (Pub. L. 99–272), enacted on April 7, 1986, amended the Act concerning the provision of targeted case management services. Specifically, section 9508 of COBRA added a new section 1915(g) to the Act that—

- Provided that a State may elect to furnish case management, targeted to specified groups, as a service covered under the State plan;
- Defined case management services as services that will assist individuals, eligible under the State plan, in gaining access to needed medical, social, educational, and other services;
- Provided an exception to the statewideness requirement of section 1902(a)(1) of the Act by allowing a State to limit its provision of case management services to individuals who reside in particular geographic areas or political subdivisions within the State;
- Provided an exception to the comparability requirement of section 1902(a)(10)(B) of the Act by allowing a State to furnish case management services to any specific group (targeted case management); and
- Required that there be no restriction on free choice of providers of case management services that would violate section 1902(a)(23) of the Act.

B. Changes Made by the Omnibus Budget Reconciliation Act of 1986

Section 9411(b) of the Omnibus Budget Reconciliation Act of 1986 Pub. L. 99–509, enacted on October 21, 1986, amended section 1915(g) of the Act by clarifying that a State may limit the provision of case management services to individuals with acquired immune deficiency syndrome (AIDS), AIDS-related conditions, or with either. Section 1915(g) of the Act also was amended to clarify that a State may limit case management services to individuals with chronic mental illness.

C. Changes Made by the Tax Reform Act of 1986

Section 1895(c)(3) of the Tax Reform Act of 1986 (Pub. L. 99–514), enacted on October 22, 1986, amended the statute to permit States to furnish non-targeted case management services under a State Medicaid plan. This law amended section 1905(a) of the Act by adding a new paragraph (19) that included case management services, as defined in section 1915(g)(2) of the Act, in the list of optional services a State may include in its Medicaid plan (the existing paragraph (19) was redesignated as paragraph (20)).

D. Changes Made by the Omnibus Budget Reconciliation Act of 1987

Section 4118(i) of the Omnibus Budget Reconciliation Act of 1987 (OBRA '87) Pub. L. 100–203, enacted on December 22, 1987, amended section 1915(g)(1) of the Act to allow States to limit the providers of case management services available for individuals with developmental disabilities or chronic mental illness to ensure that the case managers for those individuals are capable of ensuring that those individuals receive needed services.

E. Changes Made by the Technical and Miscellaneous Revenue Act of 1988

Section 8435 of the Technical and Miscellaneous Revenue Act of 1988 (Pub. L. 100–647), enacted on November 10, 1988, prohibited the Secretary from denying approval of a State plan amendment to provide case management services on the basis that a State is required to provide those services under State law or on the basis that the State had paid or is paying for those services from other non-Federal revenue sources before or after April 7, 1986. This provision also specified that the Secretary was not required to make payment under Medicaid for case management services that are furnished without charge to the users of such services.

F. Changes Made by the Deficit Reduction Act of 2005

Section 6052 of the Deficit Reduction Act (DRA) of 2005 (Pub. L. 109–171), enacted on February 8, 2006, addresses Reforms of Case Management and Targeted Case Management under Medicaid. This section redefined the

term ''case management services'' to mean services that will ''assist individuals eligible under the State plan in gaining access to needed medical, social, educational, and other services'' and to include the following components:

• Assessment of an eligible individual to determine service needs, including activities that focus on needs identification, to determine the need for any medical, educational, social, or other services. These activities are defined to include the following:

—Taking client history.
—Identifying the needs of the individual, and completing related documentation.
—Gathering information from other sources, such as family members, medical providers, social workers, and educators, if necessary, to form a complete assessment of the eligible individual.

• Development of a specific care plan based on the information collected through the assessment described above. The care plan specifies the goals of providing case management to the eligible individual and actions to address the medical, social, educational, and other services needed by the eligible individual, including activities such as ensuring the active participation of the eligible individual and working with the individual (or the individual's authorized health care decision maker) and others to develop such goals and identify a course of action to respond to the assessed needs of the eligible individual.

• Referral and related activities to help an individual obtain needed services, including activities that help link the eligible individual with medical, social, educational providers, or other programs and services that are capable of providing needed services, such as making referrals to providers for needed services and scheduling appointments for the individual.

• Monitoring and follow-up activities, including activities and contacts that are necessary to ensure that the care plan is effectively implemented and adequately addresses the needs of the eligible individual. Monitoring and follow-up activities may be with the individual, family members, providers, or other entities. These activities may be conducted as frequently as necessary to help determine such matters as:

—Whether services are being furnished in accordance with the individual's care plan.
—Whether the services in the care plan are adequate to meet the needs of the individual.
—Whether there are changes in the needs or status of the individual.

If there are changes in the needs or status of the individual, monitoring and follow-up activities include making necessary adjustments in the care plan and service arrangements with providers.

Section 6052 of the DRA also clarifies that the term ''case management'' does not include the ''direct delivery of an underlying medical, educational, social, or other service to which an eligible individual has been referred'' by adding clause section 1915(g)(2)(A)(iii) of the Act. In addition, with respect to foster care, the statute gives examples of some types of activities that are not covered. With respect to the direct delivery of foster care services, the following activities are not considered to qualify as components of Medicaid case management services:

• Research gathering and completion of documentation required by the foster care program;
• Assessing adoption placements;
• Recruiting or interviewing potential foster care parents;
• Serving legal papers;
• Home investigations;
• Providing transportation;
• Administering foster care subsidies; or
• Making placement arrangements.

The DRA also added a new section 1915(g)(2)(B) to the Act, defining the term ''targeted case management services'' as case management services that are furnished without regard to the requirements of section 1902(a)(1) of the Act, regarding statewide availability of services, and section 1902(a)(10)(B) of the Act, regarding comparability of services. Although the ability to provide these services without regard to section 1902(a)(1) of the Act and section 1902(a)(10)(B) of the Act is not new, this paragraph clarifies that the State can ''target'' case management services to specific classes of individuals, or to individuals who reside in specified areas of the State (or both).

Section 6052 of the DRA also added a new section 1915(g)(3) to the Act, to clarify that when a case manager contacts individuals who are not eligible for Medicaid, or who are Medicaid eligible but not included in the eligible target population in the State, that contact may qualify as Medicaid case management services. The contact is considered an allowable case management activity when the purpose of the contact is directly related to the management of the eligible individual's care. It is not considered an allowable case management activity if those contacts relate directly to the identification and management of the non-eligible or non-targeted individual's needs and care.

Section 6052 of the DRA added a new section 1915(g)(4) to the Act to discuss the circumstances under which Federal financial participation (FFP) is available for case management or targeted case management services. With a few exceptions described in the following paragraph, in accordance with section 1902(a)(25) of the Act, FFP only is available for the cost of case management or targeted case management services if there are no other third parties liable to pay for those services, including as reimbursement under a medical, social, educational, or other program. When the costs of any part of case management or targeted case management services are reimbursable under another federally funded program, a State is directed to allocate the costs between the other program(s) and Medicaid in accordance with OMB Circular (No. A–87) (or any related or successor guidance or regulations regarding allocation of costs among Federally funded programs) under an approved cost allocation program.

It should be noted that per section 1903(c) of the Act, nothing in this rule would prohibit or restrict payment for medical assistance for covered Medicaid services furnished to a child with a disability because such services are included in the child's Individualized Education Program (IEP) or Individual Family Service Plan (IFSP). Likewise, payment for those services that are included in the IEP or IFSP would not be available when those services are not covered Medicaid services.

Section 6052 of the DRA also clarified, in a new section 1915(g)(5) of the Act, that nothing in section 1915(g) of the Act shall be construed as affecting the application of rules with respect to third party liability under programs or activities carried out under title XXVI of the Public Health Service Act (the HIV Health Care Services Program) or the Indian Health Service.

This rule implements in Federal regulations the statutory provisions permitting coverage of case management and targeted case management as optional services under a State Medicaid plan, in accordance with sections 1905(a)(19) and 1915(g) of the Act, as amended by the DRA, and all other relevant statutory provisions.

III. Provisions of the Interim Final Rule

[If you choose to comment on issues in this section, please indicate the caption ''Provisions of the Interim Final

Rule'' at the beginning of your comments.]

To incorporate the policies and implement the statutory provisions described above, we are making the following revisions to 42 CFR chapter IV, subchapter C, Medical Assistance Programs.

A. Freedom of Choice Exception To Permit Limitation of Case Management Providers for Certain Target Groups—§ 431.51(c)

While the freedom of choice requirement is beneficial to the Medicaid population as a whole, in OBRA '87, the Congress recognized that this requirement might not adequately protect the interests of persons with a developmental disability or chronic mental illness. In several States (or political subdivision), a particular agency may be designated under State law or regulation to serve as the exclusive source of case management services with respect to these populations. Therefore, section 4118(i) of OBRA '87 amended section 1915(g)(1) of the Act to provide States with some latitude to restrict the availability of case management providers to these targeted groups to assure that case management providers are capable of ensuring that Medicaid eligible individuals will receive needed services.

Consistent with section 1915(g) of the Act, as amended by section 4118(i) of OBRA '87, when a target group consists solely of individuals with developmental disabilities or chronic mental illness, including a subgroup of those individuals (for example, children with mental illness), States may limit provider participation to specific persons or entities by setting forth qualifying criteria that assure the ability of the case managers to connect individuals with needed services. We note, however, that a State's decision to restrict case managers for these populations does not impinge on targeted individuals' rights to choose freely among those individuals or entities that the State has found qualified and eligible to provide targeted case management services. Absent a waiver to the contrary, those individuals also maintain their right to choose qualified providers of all other Medicaid services they receive.

We are amending § 431.51 by revising paragraphs (c)(2) and (c)(3) and adding a new paragraph (c)(4) to afford States the option of limiting providers of case management services available to furnish services defined in § 440.169 for targeted groups that consist solely of individuals with developmental disabilities or chronic mental illness. This implements the statutory provisions at section 1915(g)(1) of the Act.

B. Statewideness and Comparability Exception to Permitting Targeting—§ 431.54

While a State can provide case management services under its State plan to all Medicaid eligible individuals, it is not required to do so. Under section 1915(g)(1) of the Act, a State is not bound by the ''statewideness'' requirement of section 1902(a)(1) of the Act. (The ''statewideness'' requirement of section 1902(a)(1) of the Act provides, in part, that the provisions of a State plan be in effect in all political subdivisions of the State.) Thus, States may limit the provision of case management services to any defined location of the State (that is, city, county, community, etc.).

Section 1915(g)(1) of the Act also permits States to target case management services to individuals with particular diseases or conditions, without regard to the ''comparability'' provision in section 1902(a)(10)(B) of the Act. (The ''comparability'' provision generally requires States to make Medicaid services available in the same amount, duration, and scope to all individuals within the categorically needy group or covered medically needy group. The comparability provision also requires that the Medicaid services available to any individual in a categorically needy group are not less in amount, duration, and scope than those Medicaid services available to an individual in a medically needy group.) Thus, a State may limit case management services to any specific identifiable group, such as individuals with human immunodeficiency virus (HIV), acquired immune deficiency syndrome (AIDS), AIDS-related conditions, or chronic mental illness. A State's flexibility to target case management services to a specific group sets these services apart from most other services available under the Medicaid program.

In identifying the groups eligible to receive targeted case management services, States are not required to distinguish eligible individuals by traditional Medicaid concepts of eligibility groups (that is, mandatory categorically needy, optional categorically needy, medically needy), although this avenue continues to be available to States, should they choose it. Instead, States may target case management services by age, type or degree of disability, illness or condition, or any other identifiable characteristic or combination of characteristics. There is no limit on the number of groups to whom case management services may be targeted.

We note that the exception to the comparability requirement applies only to the provision of targeted case management services under section 1915(g) of the Act. The comparability requirements of section 1902(a)(10)(B) of the Act continue to apply to all other Medicaid services for which an individual may be eligible, unless these services are subject to comparability exceptions in their own right. In other words, receipt of case management services does not in any way alter an individual's eligibility to receive other services under the State plan.

In § 431.54, we are revising paragraph (a) and adding a new paragraph (g) that includes targeted case management services as an exception to the comparability requirements in § 440.250 and to the statewide operation requirement in § 431.50(b). This implements the targeting provisions at section 1915(g)(1) of the Act.

C. Definition of Case Management Services—§ 440.169

Consistent with the provisions of section 1915(g)(2) of the Act, as added by the DRA, we will define case management services in § 440.169(a) generally as services that assist individuals eligible under the plan in gaining access to needed medical, social, educational, and other services. The intent of case management is to assist the individual in gaining access to needed services, consistent with the requirements of the law and these regulations. ''Other services'' to which an individual eligible under the plan may gain access may include services such as housing and transportation.

In § 440.169(b), we define targeted case management services as case management services furnished to particular defined target groups or in any defined locations without regard to requirements related to statewide provision of services or comparability.

The integrated medical direction and management of services furnished to inpatients in a medical institution already includes case management activities. Therefore, including separate coverage for institutionalized individuals will in general, result in duplicative coverage and payment. Individuals with complex and chronic medical needs and individuals transitioning to a community setting after a significant period of time in a hospital, nursing facility, or intermediate care facility for individuals with mental retardation, however,

require case management that is beyond the scope of work of institutional discharge planners. These case management services facilitate the process of transitioning individuals from institutional care to community services. For example, individuals may require assistance locating community services. Thus, services we define as case management services for transitioning individuals from medical institutions to the community will be included as a separately covered case management service.

In § 440.169(c), we define case management services for the transitioning of individuals from institutions to the community. Individuals (except individuals ages 22 to 64 who reside in an institution for mental diseases (IMD) or individuals who are inmates of public institutions) may be considered to be transitioning to the community during the last 60 consecutive days (or a shorter period specified by the State) of a covered, long-term, institutional stay that is 180 consecutive days or longer in duration. For a covered, short-term, institutional stay of less than 180 consecutive days, individuals may be considered to be transitioning to the community during the last 14 days before discharge. We use these time requirements to distinguish case management services that are not within the scope of discharge planning activities from case management required for transitioning individuals with complex, chronic, medical needs to the community. As specified in § 441.18(a)(8)(vii)(D) and (E), FFP would not be payable until the date that an individual leaves the institution, is enrolled with the community case management provider, and receiving medically necessary services in a community setting.

In sum, we are defining the case management benefit to include only services to individuals who are residing in a community setting or transitioning to a community setting following an institutional stay.

Our proposed exclusion of FFP for case management services or targeted case management services provided to individuals under age 65 who reside in an IMD or to individuals involuntarily living in the secure custody of law enforcement, judicial, or penal systems is consistent with the statutory requirements in paragraphs (A) and (B) following paragraph section 1905(a)(28) of the Act. The statute indicates that ''except as otherwise provided in paragraph (16), such term [medical assistance] does not include (A) any such payments with respect to care or services for any individual who is an inmate of a public institution. An individual is considered to be living in secure custody if serving time for a criminal offense in, or confined involuntarily to, State or Federal prisons, local jails, detention facilities, or other penal facilities. A facility is a public institution when it is under the responsibility of a governmental unit or over which a governmental unit exercises administrative control. Case management services could be reimbursed on behalf of Medicaid-eligible individuals paroled, on probation, on home release, in foster care, in a group home, or other community placement, that are not part of the public institution system, when the services are identified due to a medical condition targeted under the State's Plan, and are not used in the administration of other non-medical programs.

At paragraph (B), following paragraph section 1905(a)(28) of the Act, the statute indicates that medical assistance does not include ''any such payments with respect to care or services for any individual who has not attained 65 years of age and who is a patient in an institution for mental diseases.'' Paragraph (16) includes in the definition of ''medical assistance'' ''* * * inpatient psychiatric hospital services for individuals under age 21 * * *''. Section 1905(h) of the Act defines ''inpatient psychiatric hospital services'' to include inpatient services in inpatient settings other than psychiatric hospitals, as specified by the Secretary in regulations. The Secretary has specified in regulations at § 440.160 that such settings include ''a psychiatric facility which is accredited by the Joint Commission on Accreditation of Healthcare Organizations, the Council on Accreditation of Services for Families and Children, the Commission on Accreditation of Rehabilitation Facilities, or by any other accrediting organization with comparable standards, that is recognized by the State.'' Thus, the term ''inpatient hospital services for individuals under age 21'' includes services furnished in accredited psychiatric residential treatment facilities, currently known as ''PRTFs,'' providing inpatient psychiatric services for individuals under age 21 that are not hospitals.

However, the statutory wording of the exception to the IMD exclusion makes it clear that medical assistance includes payment only for *inpatient hospital services* furnished to residents under age 21 in an inpatient psychiatric hospital or, by regulation, to residents under age 21 in an accredited PRTF. FFP does not extend to other services furnished to individuals under age 21 residing in these settings. However, we are clarifying in this rule that FFP is available for community case management services to transition an individual receiving inpatient psychological services for individuals under age 21 (authorized under section 1905(a)(16) of the Act), after discharge from a medical institution to the community. FFP would not be payable until the date that an individual leaves the institution, is enrolled with the community case management provider, and receiving medically necessary services in a community setting.

At § 440.169(d), we specify that case management includes the following elements specified in section 1915(g)(2)(A)(ii) of the Act:

1. Assessment and periodic reassessment of an eligible individual to determine service needs, including activities that focus on needs identification, to determine the need for any medical, educational, social, or other services. Such assessment activities include:

- Taking client history.
- Identifying the needs of the individual and completing related documentation.
- Gathering information from other sources such as family members, medical providers, social workers, and educators, if necessary, to form a complete assessment of the eligible individual.

Because the statute defines case management services as those services that will assist individuals eligible under the plan in gaining access to needed medical, social, educational, and other services, we believe that an assessment of an individual's needs should be comprehensive and address all needs of the individual. Thus, we are requiring in § 440.169(d)(1) that the assessment be comprehensive in order to address all areas of need, the individual's strengths and preferences, and consider the individual's physical and social environment. Performance of a comprehensive assessment can minimize the need for an individual to be covered under multiple case management plans and have multiple case managers, and can reduce the likelihood of service duplication and inefficiencies.

Assessment includes periodic reassessment to determine whether an individual's needs and/or preferences have changed. At this time, we will not put forth Federal standards for the frequency of reassessment, but recommend that face-to-face reassessments be conducted at least

annually or more frequently if changes occur in an individual's condition.

2. Development and periodic revision of a specific care plan based on the information collected through an assessment or reassessment, that specifies the goals and actions to address the medical, social, educational, and other services needed by the eligible individual, including activities such as ensuring the active participation of the eligible individual and working with the individual (or the individual's authorized health care decision maker) and others to develop those goals and identify a course of action to respond to the assessed needs of the eligible individual.

Because the assessment of an individual's needs must be comprehensive, the care plan also must be comprehensive to address these needs. However, while the assessment and care plan must be comprehensive and address all of the individual's needs, an individual may decline to receive services in the care plan to address these needs. Section 1902(a)(23) of the Act requires that recipients have free choice of qualified providers. This means that the individual cannot be required to receive services from a particular provider—or from any provider—if the individual chooses. If an individual declines services listed in the care plan, this must be documented in the individual's case records.

• Referral and related activities (such as scheduling appointments for the individual) to help an individual obtain needed services, including activities that help link eligible individuals with medical, social, educational providers, or other programs and services that are capable of providing needed services to address identified needs and achieve goals specified in the care plan.

• Referral and related activities do not include providing transportation to the service to which the individual is referred, escorting the individual to the service, or providing child care so that an individual may access the service. The case management referral activity is completed once the referral and linkage has been made. It does not include the direct services, program, or activity to which the individual is linked.

• Monitoring and follow-up activities, including activities and contacts that are necessary to ensure that the care plan is effectively implemented and adequately addresses the needs of the eligible individual. Monitoring and follow-up activities may be with the individual, family members, providers, or other entities or individuals. These activities may be conducted as frequently as necessary to help determine whether:

—The services are being furnished in accordance with the individual's care plan.

—The services in the care plan are adequate to meet the needs of the individual.

—There are changes in the needs or status of the individual. If there are changes in the needs or status of the individual, monitoring and follow-up activities include making necessary adjustments in the care plan and service arrangements with providers.

Monitoring may involve either face-to-face or telephone contact. We are requiring that monitoring occur at a frequency established by the State, but no less frequently than annually.

In the course of providing case management services, case managers can use a person-centered approach. A person-centered approach is a process used to develop, implement, and manage a care plan that attempts to fulfill the objectives and personal preferences of the individual or the legal representative of that individual. The process focuses on the person rather than the system; directly involves the person (or the legal representative of that individual) in the plan development, all aspects of implementation and management; and is tailored to meet individualized needs. Varying levels of person-centered planning, including choice not to participate, may be selected by the individual (or by the individual's legal representative). The individual or legal representative can participate throughout all components of case management and direct who may participate in the care plan development process along with the case manager and the individual or the individual's legal representative.

Case management services must be provided by a single Medicaid case management provider. This provision is consistent with the requirement that the case management includes a comprehensive assessment and care plan. Thus, when an individual could be served under more than one targeted case management plan amendment because he falls within the scope of more than one target group (for example when the individual has both mental retardation and a mental illness and the State has target groups for both conditions), a decision must be made concerning the appropriate target group so that the individual will have one case management provider. That provider will be responsible for ensuring that the comprehensive assessment and care plan address the individual's needs stemming from mental retardation and from the mental illness. In doing so, the case management provider must coordinate with service providers in both systems of care to ensure that the individual's needs are met. We intend to provide for a delayed compliance date so that States will have a transition period of the lesser of 2 years or 1 year after the close of the first regular session of the State Legislature that begins after this regulation becomes final before we will take enforcement action on the requirement for one case manager to provide comprehensive services to individuals. We will be available to States as needed for technical assistance during this transition period.

We note that section 1915(g)(2) of the Act specifically defines case management services in terms of services furnished to individuals who are eligible under the State plan. This provision reinforces basic program requirements found in section 1905(a) of the Act that require medical assistance to be furnished only to eligible individuals. An ''eligible individual'' is a person who is eligible for Medicaid and eligible for case management services (including targeted case management services) as defined in the Medicaid State plan, at the time the services are furnished. Case management as medical assistance under the State plan cannot be used to assist an individual, who has not yet been determined eligible for Medicaid, to apply for or obtain this eligibility. (Those activities may be an administrative expense of the State's operation of its Medicaid program, rather than a medical assistance service.)

While the provision of case management services to non-Medicaid eligible individuals cannot be covered, we are including a regulatory provision at § 440.169(e) to make clear that the effective case management of eligible individuals may require some contact with non-eligible individuals. For instance, in completing the assessment for a Medicaid eligible child for whom targeted case management is available, it may be appropriate for a case manager to interview the child's parents and/or other family members who are not eligible for Medicaid, or who are not, themselves, part of a target population specified in the State plan. Contacts with family members that are for the purpose of helping the Medicaid-eligible individual access services can be covered by Medicaid. It also may be appropriate to have non-eligible family members involved in all components of case management because they may be able to help identify needs and supports to assist the eligible individual in

obtaining services, provide case managers with useful feedback, and alert case managers to changes in the individual's needs.

A case manager's contacts with individuals who are not eligible for Medicaid, or who are not included in the group who receives targeted case management services, can be considered allowable activities, eligible for FFP, when the purpose of the contact is directly related to the management of the eligible individual's care. However, these activities will not be considered allowable if they relate directly to the identification and management of the non-eligible, or non-targeted individual's needs and care. Contacts that relate to the case management of non-eligible individuals, that is, assessment of their needs, referring them to service providers, and monitoring their progress, cannot be covered by Medicaid due to the fact they are not Medicaid eligible or not covered under the case management target population. If these other family members or other individuals also are Medicaid eligible and covered under a target group included in the State plan, Medicaid could pay for case management services furnished to them. In addition, these individuals could receive other medically necessary services for which they may qualify.

D. Comparability Exception To Permit Targeting—§ 440.250

We will revise § 440.250 by adding a new paragraph (r) to provide for an exception to the comparability requirements under § 440.240 for targeted case management services.

E. Technical Change to Statement of Statutory Basis—§ 441.10

In part 441, subpart A, we will revise § 441.10 to add a new paragraph (m), which provides a statutory basis for the provision of case management and targeted case management services.

F. Limitations on Case Management Services—§ 441.18

At § 441.18(a)(1), we are specifying that, with the exception discussed above at § 431.51, individuals must have the free choice of any qualified provider. Section 9508 of COBRA amended section 1915(g) of the Act to require that there be no restriction on a recipient's free choice of providers, in violation of section 1902(a)(23) of the Act. Based on COBRA's legislative history, we believe the Congress intended that individuals receiving case management services under section 1915(g) of the Act not be locked into designated providers, whether for case management services, or for other services. (See H. Rept. No. 453, 99th Cong., 1st Sess. 546 (1985).) Therefore, except as described in § 441.18(b), individuals eligible to receive case management (or targeted case management) services must be free to choose their case management provider from among those that have qualified to participate in Medicaid and are willing to provide the services.

States must establish qualifications for providers of case management services in the State plan. These qualifications relate to minimum age requirements, education, work experience, training, and other requirements, such as licensure or certification, which the State may establish. The Act does not set any minimum educational or professional qualifications for the provision of case management services. Therefore, States have flexibility to establish qualifications that are reasonably related to the demands of the Medicaid case management services to be furnished and the population being served. For example, it is reasonable to expect that the qualifications for case managers serving children who are ventilator-dependent to be different than those qualifications for case managers serving persons with intellectual disabilities. While the case manager must possess the knowledge and skills to conduct a comprehensive assessment and to assist the individual or the individual's legal representative with the development of a comprehensive care plan, this does not mean that the case manager must have experience with the program requirements of every medical, social, educational, or other program to which an individual may be referred; it means that the case manager must be familiar with the general needs of the population being served and must be able to connect and coordinate with medical, social, educational, and other programs that serve the population. If the case manager also provides other services under the plan, the State must ensure that a conflict of interest does not exist that will result in the case manager making self-referrals.

We are also including at § 441.18(a)(2) and § 441.18(a)(3) provisions to ensure that the provision of case management is neither coerced nor a method to restrict access to care or free choice of qualified providers. The receipt of case management services must be at the option of individuals included in a specific target group. This requirement is also consistent with section 1902(a)(19) of the Act. A recipient cannot be compelled to receive case management services for which he or she might be eligible. Requiring an individual to receive case management services against his or her will would not be in the best interest of the individual and, thus, will violate sections 1902(a)(19) and 1902(a)(23) of the Act. A State also cannot condition receipt of case management services on the receipt of other services since this also serves as a restriction on the individual's access to case management services.

Section 1915(g)(1) of the Act prohibits the use of case management services in any fashion that will restrict an individual's access to other care and services furnished under the State plan, which will violate section 1902(a)(23) of the Act. The purpose of case management services authorized by section 1915(g) of the Act is to help an individual gain access to services, not hinder this access. Permitting case managers to function as gatekeepers under this optional State plan service will allow case managers to restrict access to services—that is, to the extent to which authorization may be denied, access also may be denied. Because this concept is contrary to the statutory definition of case management services, providers of case management services (including targeted case management services) furnished under this section are prohibited from serving as gatekeepers under Medicaid. (States may use a section 1915(b) waiver or primary care case management (PCCM) services under section 1905(a)(25) for this purpose.) Similarly, a State cannot require that an individual receive case management services as a prerequisite for receiving other Medicaid services.

In § 441.18(a)(4), we require that the State's plan provide that case management services will not duplicate payments made to public agencies or private entities under the State plan and other program authorities. In authorizing States to offer case management services, the Congress recognized that there was some potential for duplicate payments. This recognition led to an explicit statement in the legislative history of COBRA that prohibited the duplication of payments. (See H. Rept. No. 453, 99th Cong., 1st Sess. 546 (1985).) The Congress clarified its prohibition on the duplication of funding in section 8435 of the Technical and Miscellaneous Revenue Act of 1988. This provision prohibits the Secretary from denying approval of a case management State plan amendment on the basis that the State is required to provide those services under State law, or on the basis that the State had paid for those services from other non-Federal funds. In other words, the duplication of payment prohibition does

not preclude States from using Medicaid to pay for case management services that previously had been funded solely with State and/or local dollars. The amendment also specifies, however, that the Secretary is not required to make payment under Medicaid for case management services that are furnished without charge to users of the services.

When an individual could be served under more than one targeted case management plan amendment because he falls within the scope of more than one target group, a decision must be made concerning the appropriate target group so that the individual will have one case manager responsible for his services and duplicate payment for the same purpose will not be made.

While FFP would not be available for case management services that duplicates payments made under other program authorities, section 1903(c) of the Act provides an exception for medical assistance for covered Medicaid services, including case management services, furnished to a child with a disability because such services are included in an individualized education program or individualized family service plan.

In section 441.18(a)(5), we would require case management services to be provided on a one-to-one basis to eligible individuals by one case manager. We are including this requirement to implement the provisions of section 1915(g)(2)(A)(ii) that sets forth a unified care planning process for case management to respond to the needs of eligible individuals based on a comprehensive assessment. The statute describes a step-by-step process, each component built upon the previous one, to ensure that the care plan is effectively implemented and adequately addresses all of the assessed needs of the eligible individual. Having one case manager is necessary to ensure accountability and coordination in assisting individuals in gaining access to services to address all components of assessed need. Fragmenting the service would reduce the quality of case management; the point of case management is to address the complexities of coordinated service delivery for individuals with medical needs. The case manager should be the focus for coordinating and overseeing the effectiveness of all providers and programs in responding to the assessed need.

We are including § 441.18(a)(6) to prohibit providers of case management services from exercising the State Medicaid agency's authority to authorize or deny the provision of other services under the plan. Although a State Medicaid agency may place great weight on the informed recommendation of a case manager, it must not rely solely on case management recommendations in making decisions about the medical necessity of other Medicaid services that the individual may receive. The decision to authorize the provision of a service must remain with the State Medicaid agency as required by § 431.10(e). Costs related to these activities, such as prior authorization or determination of medical necessity, which are necessary for the proper and efficient administration of the Medicaid State plan, must be claimed as a direct administrative expense by the Medicaid agency and may not be included in the development of a case management rate.

If a State plan provides for case management services (including targeted case management services), the State must require providers to maintain case records that document the information required by § 441.18(a)(7). These case records must document, for each individual receiving case management, the name of the individual; the dates of case management services; the name of the provider agency (if relevant) and person chosen by the individual to provide the case management services; the nature, content, units of case management services received and whether the goals specified in the care plan have been achieved; whether the individual has declined services in the care plan; timelines for providing services and reassessment; and the need for, and occurrences of, coordination with case managers of other programs.

States that opt to furnish case management services must do so by amending their State plans in accordance with § 441.18(a)(8) and § 441.18(a)(9). FFP is not available for case management as a medical assistance service under sections 1905(a)(19) and 1915(g) of the Act in the absence of an approved amendment to the State's Medicaid plan. A State's amendment to its State plan must contain all information necessary for CMS to determine whether the plan can be approved to serve as a basis for FFP. Each amendment must—

- Specify whether case management will be targeted, and if so, define the targeted group (and/or subgroup);
- Identify the geographic area to be served;
- Describe the services to be furnished including types of monitoring;
- Specify the frequency of assessments and monitoring and provide a justification for the frequencies (given that targeted groups may vary in their need for case management services);
- Specify the qualifications of the service providers;
- Specify the methodology under which case management providers will be paid and rates are calculated;
- Specifies if case management services are being provided to Medicaid-eligible individuals who are in institutions to facilitate transitioning to the community. In this case, the amendment must specify if case management services are being provided to individuals with long-term stays of 180 consecutive days or longer or to individuals with short-term stays of less than 180 consecutive days. Furthermore, when States choose to provide case management services to individuals in institutions to facilitate transitioning to the community, the State plan must specify the time period or other conditions under which case management may be provided in this manner. The time period that case management is provided in an institution must not exceed an individual's length of stay. In addition, the State plan must specify the case management activities and include an assurance that these activities are coordinated with and do not duplicate institutional discharge planning; include an assurance that the amount, duration, and scope of the case management activities would be documented in an individual's plan of care which includes case management activities prior to and post-discharge, to facilitate a successful transition to community living; specify that case management is only provided by and reimbursed to community case management providers; specify that FFP is only available to community providers and will not be claimed on behalf of an individual until the individual is discharged from the institution and enrolled in community services; and describe the system and process the State will use to monitor providers' compliance with these provisions.
- In addition, if the State plan provides for targeted case management, the State must submit a State plan amendment for each target group that will receive case management services. A separate amendment also must be submitted for each subgroup within a group if any of these elements differ for that subgroup.

While a State has some flexibility to establish the methodology and rates it will use to reimburse providers of case management or targeted case

management services, a State cannot employ a methodology or rate that results in payment for a bundle of services. Per diem rates, weekly rates, and monthly rates represent a bundled payment methodology that is not consistent with section 1902(a)(30)(A) of the Act, which requires that States have methods and procedures to assure that payments are consistent with efficiency, economy, and quality of care. A bundled payment methodology exists when a State pays a single rate for more than one service furnished to an eligible individual during a fixed period of time. The payment is the same regardless of the number of services furnished or the specific costs, or otherwise available rates. Since these bundled (daily, weekly, or monthly) rates are not reflective of the actual types or numbers of services provided or the actual costs of providing the services, they are not accurate or reasonable payments and may result in higher payments than would be made on a fee-for-service basis for each individual service. A bundled rate is inconsistent with economy, since the rate is not designed to accurately reflect true costs or reasonable fee-for-service rates, and with efficiency, since it requires substantially more Federal oversight resources to establish the accuracy and reasonableness of State expenditures. We therefore expect that case management and targeted case management services reimbursed on a fee-for-service basis, as opposed to a capitated basis, will be reimbursed based on units of time. Because of the nature of case management, which can include contacts of brief duration, we believe that the most efficient and economical unit of service is a unit of 15 minutes or less. Accordingly, we are requiring in § 441.18(a)(8)(vi) that the unit of service for case management and targeted case management services be 15 minutes or less.

In § 441.18(b) we require that, if a State limits qualified providers of case management services for target groups with developmental disability or chronic mental illness, in accordance with § 431.51(a)(4), the plan must identify the limitations being imposed on the providers and specify how these limitations enable providers to ensure that individuals within the target groups receive needed services.

At § 441.18(c)(1), we specify that the case management benefit does not include, and FFP is not available for, activities that are an integral component of another covered Medicaid service. To include those activities as a separate benefit will result in duplicate coverage and payment. This activity would not be consistent with proper and efficient operation of the program. For example, when an individual receives services from a physician and the physician refers the individual to a home health agency for services, that referral is integral to the physician's service and FFP will not be available for that activity as a case management service.

Individuals participating in a managed care plan receive case management services as an integral part of the managed care services. This case management is for the purpose of managing the medical services provided by or through the plan and does not extend to helping an individual gain access to social, educational, and other services the individual may need. Thus, an individual receiving services through a managed care plan may also receive case management or targeted case management services when the individual is eligible for those services. For example, an individual with AIDS served by a managed care plan may also be served under a case management plan targeted to persons with AIDS/HIV. However, FFP is not available for case management of medical services that are also managed by the individual's managed care plan. In this situation, it is expected that the Medicaid case manager would coordinate with the managed care plan as appropriate. At § 441.18(c)(2) through § 441.18(c)(5), we set forth limitations authorized by the DRA on the case management benefit. The regulation text at § 441.18(c) includes the statutory principle set forth at section 1915(g)(2)(A)(iii) of the Act providing that the case management benefit does not include services that involve the direct delivery of underlying medical, educational, social, or other services to which an eligible individual has been referred.

The statutory definition of case management established by the DRA draws a distinction between services that assist an individual in accessing needed services and the actual services to which access is gained. Case management services include only those activities that help an individual gain access to needed medical, social, educational, and other services. Case managers can assist individuals in gaining access to needed services, regardless of the funding source of the service to which the individual is referred. By including more than medical care, States can implement a holistic approach to the delivery of services by using case management to identify all of an individual's care needs and coordinate access to services that address these needs.

Case management does not include the actual direct services the individual obtains. For this reason, if a case manager provides a direct service, such as counseling, during the course of a case management visit, the direct service cannot be reimbursed as part of the case management service. This service may be covered under another Medicaid service category, such as rehabilitation services, if the service is covered under the State's Medicaid program, the case management provider also is a qualified provider of that service, and the individual chooses to receive the service from the case manager. The performance of diagnostic tests also is a direct service. While diagnostic tests may provide information that inform the assessment and care development process, they do not constitute an assessment activity under section 1915(g)(2) of the Act that is covered under the case management benefit. These services, however, may be covered under another medical assistance category if provided in the State plan. Similarly, referral and related activities do not include the provision of transportation or escort services, nor do they include the provision of day care services so that an eligible individual with children can access needed services. These are direct services rather than coverable case management activities.

The nature of the case management benefit to ''assist eligible individuals to gain access to needed services'' and the similarity of its 1985 definition to the purpose of other programs also has led many to confuse the Medicaid benefit with the actual administration of non-Medicaid programs. This is particularly true when a large number or percentage of the participants in these non-Medicaid programs also are eligible for Medicaid (and thus, potentially included in a target group eligible to receive targeted case management services). Concerns in this area have been raised through audits, the review of State plan amendments and by the Government Accountability Office (Report GAO–05–748, entitled ''States Use of Contingency Fee Consultants to Maximize Federal Reimbursements Highlights Need for Improved Federal Oversight,'' June 2005). The following are examples of targeted case management State plans that were inconsistent with Federal policy, resulting in excessive Federal Medicaid outlays. These examples illustrate the need for the specific definitions and guidance contained in this rule.

- In one State, in fiscal year 2003, the State received an estimated $17 million in Federal reimbursement for targeted case management claims from juvenile justice and child welfare agencies of

which about $12 million was for services that were integral to non-Medicaid programs.

• A State agency claimed $86.6 million Federal share in fiscal years 2002 and 2003 for unallowable targeted case management services furnished by a social services agency. Contrary to Federal requirements, the rates charged to Medicaid included social workers' salary costs for child protection and welfare services.

• In a CMS audit of a State's counties that provided targeted case management services, 72 percent of encounters in one county were incorrectly claimed during a 1-year period. These encounters either did not meet the definition of targeted case management at section 1915(g)(2) of the Act or were claimed for clients that were ineligible for Medicaid.

These past abuses and other occurrences of cost shifting from State foster care programs led to the reforms in case management and targeted case management made by section 6052 of the DRA. In the DRA, the Congress specifically precluded the use of the Medicaid case management benefit for the direct delivery of an underlying medical, social, educational, or other service funded by other programs. In addition, the Congress provided examples with respect to foster care of services that are excluded from case management services. The inclusion of examples for foster care does not limit the general prohibition on including the direct services of other programs from case management services under Medicaid as well. For example, the exclusion extends to—

• Child Welfare/Child Protective Services. States provide child protective services to children at risk of abuse or neglect. These services include investigation of allegations of abuse or neglect, identification of risk factors, provision of services to children and families in their own homes, monitoring of at-risk children, placement of children into foster care or adoptive homes, and evaluation of interventions. Child protective services includes development and oversight of a service plan for the child and family with the goal of moving the child toward permanency either through family reunification, adoption, or other permanent living arrangement. Because these services have their own goals'protecting vulnerable children and moving them toward a safe and stable living situation—we believe child protective services are the direct services of State child welfare programs and are not Medicaid case management. These activities of child welfare/child protective services are separate and apart from the Medicaid program. Thus, Medicaid case management services must not be used to fund the services of State child welfare/child protective services workers. Further, Medicaid may not pay for case management services furnished by contractors to the State child welfare/child protective services agency, even if they would otherwise be qualified Medicaid providers, because they are furnishing direct services of the programs of that agency. However, children receiving child welfare/child protective services may still qualify to receive Medicaid targeted case management services, when these services are provided according to the Medicaid State plan program by a qualified Medicaid provider who is not furnishing direct services of other programs. For example, a Medicaid eligible child with a mental disorder receiving child protective services may also qualify to receive case management services targeted to children with mental disorders.

• Parole and Probation. States often use parole and probation as methods by which offenders can be eased back into the mainstream society. The supervision, counseling, and oversight required by these programs assist individuals in learning—or re-learning—how to live within the legal bounds that society places on the behavior of its members. Both parole and probation are, however, functions of the administration of the justice system, and exist independent of the Medicaid program. These functions have their own goals (for example, conformance to law, adherence to conditions imposed by a court) which may coincide with goals of the Medicaid program, but exist separate and independent from it. Because probation and parole functions are necessary and integral components of the administration of another system, we believe that parole and probation functions are the direct services of corrections programs and are not Medicaid case management. Thus, we are prohibiting the use of parole or probation officers (or other employees or contractors of the justice system or court) as case management providers under Medicaid. Individuals who are on parole or probation may still qualify to receive Medicaid case management or targeted case management services for which they otherwise qualify (for example, a Medicaid-eligible individual with a traumatic brain injury could qualify to receive case management targeted to a group of persons with brain injuries). However, claims for Medicaid case management must not include the administration of the State's parole or probation system.

• Public Guardianship. Persons who have been determined to need guardians, because they are found incapable of handling their own affairs, may qualify for Medicaid case management when they are also part of a group to whom this service is provided (for example, persons with developmental disabilities). The public guardianship function, however, is also a State or locally administered activity that is independent of the Medicaid program. There is a fundamental difference between guardians (or conservators, or other similarly appointed individuals) and case managers. Case managers may assist decision-makers in reaching conclusions about the needs of an individual and the services that may best meet those needs, but they do not make these decisions on behalf of that individual. That is the function of a guardian (or conservator, or other similarly appointed individual). Case managers may, therefore, assist guardians and others, in enabling an individual to gain access to needed services, but they may not be used to replace or fund the function of this fundamentally non-Medicaid activity.

• Special Education. The Individuals with Disabilities Education Act (IDEA) ensures every child with a disability has available a free appropriate public education (FAPE) that includes special education and related services. Part B of the IDEA requires the development and implementation of an individualized education program (IEP) that addresses the unique needs of each child aged 3 through 21 with a disability. Part C of the IDEA requires the development and implementation of an individualized family service plan (IFSP) to address the unique developmental needs of an infant or toddler under 3 years of age with a disability. The IEP identifies the special education and related services needed for the child with a disability. An IFSP identifies the early intervention services and other services needed for an infant or toddler with a disability and his or her family.

While some of the services identified on a child's IEP (e.g., a related service such as physical therapy) may be covered under Medicaid, the development, review, and implementation of the IEP is part of a process that is required by Part B of the IDEA. This process should not be confused with Medicaid case management (or targeted case management) services, which also may be needed by the child. Similarly, under Part C, the IFSP may identify a need for

case management as well as other services and activities some of which may be covered under Medicaid and others that, while a necessary component of the Part C program, are not covered under Medicaid. One distinction between the IEP and IFSP is that the IFSP process for an infant or toddler with a disability under the age of three requires a service coordinator from the outset, some of whose activities may be Medicaid-funded case management (or targeted case management) services. Case management activities in this context could include taking the infant or toddler's history, identifying service needs, and gathering information from other sources to form a comprehensive assessment. Case management would not include administrative functions that are purely IDEA functions such as scheduling IFSP team meetings, and providing the requisite prior written notice.

An IEP or IFSP may identify the need for case management to coordinate access to a broad range of medical service providers from several disciplines, and also may identify needs for case management to gain access to non-medical services. As with other Medicaid covered services (such as physical, occupational, or speech therapy) identified on the IEP or IFSP, such case management services may be covered under Medicaid when furnished to a Medicaid-eligible child by a Medicaid qualified provider who assists in gaining access to and coordinating all needed services. To facilitate coordinated care, case management is a covered Medicaid service only when a single case manager comprehensively addresses all of the individual's service needs.

• While Medicaid funding could be available for the costs of a Medicaid-qualified case manager who may be operating in a school or early intervention program in assisting IDEA-eligible children in gaining access to needed services, including those identified in their IEP or IFSP, coordinating the provision of those services, and facilitating the timely delivery of services, Medicaid case management services must remain separate and apart from the administration of the IDEA programs. Medicaid may pay for those case management services where IDEA and Medicaid overlap, but not for administrative activities that are required by IDEA but not needed to assist individuals in gaining access to needed services. These would include activities such as writing an IEP or IFSP, providing required notices to parents, preparing for or conducting IEP or IFSP meetings, or scheduling or attending IEP or IFSP meetings. Section 504 of the Rehabilitation Act (RA) of 1973 requires school districts to provide to students with disabilities, appropriate educational services designed to meet the individual needs of such students to the same extent as the needs of students without disabilities are met; that is, to provide an equal opportunity for students with disabilities to participate in or benefit from educational aids, benefits, or services. We are clarifying in this regulation that FFP is not available for any case management activities not included in an IEP or IFSP but performed solely based on obligations under section 504 of the RA to ensure equal access to the educational program or activity.

In accordance with section 1903(c) of the Act, nothing in this rule would prohibit or restrict payment for medical assistance for covered Medicaid services furnished to a child with a disability because such services are included in the child's Individualized Education Program (IEP) or Individual Family Service Plan (IFSP). Likewise, payment for those services that are included in the IEP or IFSP would not be available when those services are not covered Medicaid services. In addition, Medicaid funds must not be used to replace or otherwise supplant funds used for activities related to the administration of the IDEA for infants and young children such as Child Find.

Therefore, at § 441.18(c)(2), we state the general prohibition established by the DRA in section 1915(g)(2)(A)(iii) of the Act on including as Medicaid case management the direct delivery of services, as well as include a list of programs to which we are applying this prohibition in this regulation (parole and probation, public guardianship, special education, child welfare/child protective services, and foster care). We also include in § 441.18(c)(3) the specific statutory examples with respect to foster care—

• Research gathering and completion of documentation required by the foster care program;
• Assessing adoption placements;
• Recruiting or interviewing potential foster care parents;
• Serving legal papers;
• Home investigations;
• Providing transportation;
• Administering foster care subsidies; or
• Making placement arrangements.

These examples of direct delivery of foster care activities are all administrative activities that are integral to the delivery of services through the foster care program. For the reasons discussed above, since the statute cites these administrative activities as examples, rather than as an all-inclusive list, at § 441.18(c)(3), we are interpreting the exclusion of administrative activities to extend to all administrative activities integral to the administration of the foster care program. Other foster care activities subject to this payment exclusion include case management; referral to services; overseeing foster care placements; the training, supervision, and compensation of foster care parents; and attendance at court appearances related to foster care. Since the activities of foster care programs are separate and apart from the Medicaid program, Medicaid case management services must not be used to fund the services of foster care workers. The following is an example of how this payment exclusion will be applied: When a title IV–E eligible child in foster care is referred by a caseworker to the Medicaid program for medical services or mental health services covered by the Medicaid program, that administrative activity neither can be allocated and claimed to the Medicaid program as an administrative expense of the Medicaid program nor can those costs be claimed as a case management medical assistance service. The State may, instead, claim these costs under the title IV–E program to the extent allowable (see 45 CFR 1356.60(c)(2) and ACF Child Welfare Policy Manual Section 8.1B). FFP for the medical services to which a Medicaid-eligible child who resides in foster care was referred would be available under the Medicaid program.

Furthermore, case management activities included under therapeutic foster care programs will be subject to this payment exclusion since these activities are inherent to the foster care program. FFP for medical services to a Medicaid eligible child with medical care needs who resides in therapeutic foster care would still be available, provided all Medicaid requirements were met.

At § 441.18(c)(4), we also apply this exclusion from the definition of case management the administrative activities integral to other non-medical programs, based on the general exclusion from case management of services delivered under other programs in section 1915(g)(2)(A)(iii) of the Act.

At § 441.18(c)(4), we, thus, will exclude from the case management benefit the administrative activities of any other non-medical program, specifically including activities that constitute the administration of special education programs under IDEA, the

parole and probation functions conducted by or under the authority of State or local courts or other justice entities, legal services provided by any entity, child welfare/child protective services and activities concerning guardianship of a person or the person's assets performed by or under the auspices of offices of public guardianship, or activities by any individual who has been appointed to perform guardianship, conservatorship (or other similar duties) on behalf of a Medicaid recipient by a court.

It is important to note that the exclusion of Medicaid funding for case management activities that are used in the administration of other non-medical programs does not, in any way, compromise Medicaid recipients' eligibility for medically necessary services under the plan, including medically necessary case management (and targeted case management) services that are not used to administer other programs. Thus, a Medicaid eligible child with a developmental disability, who receives foster care services, will qualify for Medicaid case management services targeted towards individuals with intellectual or other developmental disabilities that are not furnished through the foster care program. Similarly, a Medicaid-eligible child with chronic asthma receiving foster care services will receive medically necessary treatment services for that condition funded by Medicaid. Both of these children, who also receive foster care services, will continue to qualify for Medicaid-funded services. Thus, FFP will be available under the Medicaid program for medically necessary services. Similarly, an adult who tests positive for the human immunodeficiency virus (HIV) and is also on parole may continue to be eligible for medically necessary case management services targeted to individuals with HIV that are not furnished through a non-medical State program or for medically necessary treatment services.

In § 441.18(c)(5)), we clarify that activities that meet the definition in § 440.169 for case management services and under the approved State plan cannot be claimed as administrative activities, under § 433.15(b).

Certain activities may be properly claimed as administrative costs when the activities are directly related to the proper and efficient administration of the Medicaid State plan. Sometimes these activities are commonly referred to, by States and others, as ''administrative case management''; although, statute and regulation do not include such terminology. These administrative activities are performed by State agency staff and may involve facilitating access to and coordinating Medicaid program services. Some examples of these administrative activities include Medicaid eligibility determinations and re-determinations; Medicaid intake processing; Medicaid preadmission screening for inpatient care; prior authorization for Medicaid services; utilization review; and Medicaid outreach. These examples are not meant to be all-inclusive and CMS may make determinations regarding whether these or other activities are necessary for the proper and efficient administration of the State plan.

A State may not claim costs for administrative activities for the proper and efficient administration of the State plan if the activities are an integral part or extension of a direct medical service. In addition, unlike case management claimed as a service cost which can extend to coordinating with programs outside of Medicaid, administrative activities are strictly related to enhancing access to Medicaid services.

States may not claim, as administrative activities, the costs related to general public health initiatives, overhead costs, or operating costs of an agency whose purpose is other than the administration of the Medicaid program. Activities directed toward services not included under the Medicaid program, although these services may be valuable to Medicaid beneficiaries, are not necessary for the administration of the Medicaid program, and therefore are not allowable administrative costs. In addition, with regard to any allowable administrative claims, payment may only be made for the percentage of time spent which is actually attributable to Medicaid eligible individuals.

The allocation methodology for costs claimed for the proper and efficient administration of the State plan must be specified in the State's approved public assistance cost allocation plan in accordance with subpart E of 45 CFR part 95 and ASMB C–10.

When the costs of any part of case management or targeted case management are reimbursable under another federally funded program, a State is directed by section 1915(g)(4)(B) of the Act to allocate costs which are reimbursable under the other Federal program in accordance with OMB Circular No. A–87 (or any related or successor guidance or regulations regarding allocation of costs among federally funded programs) under an approved cost allocation program. (OMB Circular No. A–87, which details the cost principles for State, local, and Indian Tribal Governments for the administration of Federal awards, pertains to all Federal agencies whose programs, including Medicaid, are administered by a State public assistance agency.) This requirement is set forth in § 441.18(d). OMB Circular A–87, Attachment A, paragraph C.3.a requires allocation of costs among benefiting cost objectives (programs).

IV. Response to Comments

Because of the large number of public comments we normally receive on **Federal Register** documents, we are not able to acknowledge or respond to them individually. We will consider all comments we receive by the date and time specified in the **DATES** section of this preamble, and, when we proceed with a subsequent document, we will respond to the comments in the preamble to that document.

V. Waiver of Proposed Rulemaking

Ordinarily, we will publish a notice of proposed rulemaking and afford a period for public comments in accordance with the provisions of the Administrative Procedure Act, 5 U.S.C. 553. Further, we generally provide for final rules to be effective no sooner than 30 days after the date of publication unless we find good cause to waive the delay. Section 6052(b) of the DRA authorizes the Secretary to promulgate regulations to carry out the new statutory provisions at section 1915(g)(2) of the Act ''which may be effective and final immediately on an interim basis as of the date of the interim final regulation.'' In light of the importance of clarifying the definition of case management and ensuring the fiscal integrity of the Medicaid program, we have elected to use this authority to issue this rule as an interim final rule with comment period. Section 6052(b) of the DRA further provides that there must be a period for receipt of public comments after the date of publication of an interim final rule, and that the Secretary may revise the regulation after completion of the period of public comment. We are complying with this requirement to provide for a period of public comment.

This rule has been determined to be a major rule as defined in the Congressional Review Act, 5 U.S.C. § 804(2). These regulations are effective March 3, 2008.

VI. Collection of Information Requirements

Under the Paperwork Reduction Act (PRA) of 1995, we are required to provide 30-day notice in the **Federal Register** and solicit public comment

before a collection of information requirement is submitted to the Office of Management and Budget (OMB) for review and approval. In order to fairly evaluate whether an information collection should be approved by OMB, section 3506(c)(2)(A) of the PRA of 1995 requires that we solicit comment on the following issues:

- The need for the information collection and its usefulness in carrying out the proper functions of our agency.
- The accuracy of our estimate of the information collection burden.
- The quality, utility, and clarity of the information to be collected.
- Recommendations to minimize the information collection burden on the affected public, including automated collection techniques.

We are soliciting public comment on each of these issues for the following sections of this document that contain information collection requirements (ICRs):

Section 440.169 Case Management Services

Section 440.169(d) states that case managers assist eligible individuals by providing services such as taking client history; identifying the needs of the individual, and completing related documentation; and gathering information from other sources such as family members, medical providers, social workers, and educators (if necessary) to form a complete assessment of the eligible individual. The case manager must then develop a specific care plan based on the information collected through the assessment.

The burden associated with this requirement is the time and effort put forth by the case manager to gather the information and develop a specific care plan. While this requirement is subject to the PRA, we believe this requirement meets the requirements of 5 CFR 1320.3(b)(2), and as such, the burden associated with this requirement is exempt from the PRA.

Section 441.18 Case Management Services

Section 441.18(a) requires that if a State plan provides for case management services, as defined in § 440.169, the State must require providers to maintain case records that document for all individuals receiving case management the name of the individual; the date of the case management service; the name of the provider agency and the person providing the case management service; and the nature, content, and units of case management service. Details of what the case records must include are located at § 441.18(a)(7).

The burden associated with this requirement is the time and effort required for a provider to maintain case records. While this requirement is subject to the PRA, we believe this requirement meets the requirements of 5 CFR 1320.3(b)(2), and as such, the burden associated with this requirement is exempt from the PRA.

If you comment on these information collection and record keeping requirements, please mail copies directly to the following:

Centers for Medicare & Medicaid Services, Office of Strategic Operations and Regulatory Affairs, Division of Regulations Development, Attn.: Melissa Musotto, CMS–2237–IFC, Room C5–14–03, 7500 Security Boulevard, Baltimore, MD 21244–1850.

Office of Information and Regulatory Affairs, Office of Management and Budget, *Attn.:* Katherine Astrich, CMS Desk Officer, CMS–2237–IFC, *katherine_astrich@omb.eop.gov.* Fax (202) 395–6974.

VII. Regulatory Impact Analysis

[If you choose to comment on issues in this section, please indicate the caption ''Regulatory Impact'' at the beginning of your comments.]

We have examined the impacts of this rule as required by Executive Order 12866 (September 1993, Regulatory Planning and Review), the Regulatory Flexibility Act (RFA) (September 19, 1980, Pub. L. 96–354), section 1102(b) of the Social Security Act, the Unfunded Mandates Reform Act of 1995 (Pub. L. 104–4), and Executive Order 13132.

Executive Order 12866 (as amended by Executive Order 13258, which merely reassigns responsibility of duties) directs agencies to assess all costs and benefits of available regulatory alternatives and, if regulation is necessary, to select regulatory approaches that maximize net benefits (including potential economic, environmental, public health and safety effects, distributive impacts, and equity). A regulatory impact analysis (RIA) must be prepared for major rules with economically significant effects ($100 million or more in any 1 year).

Section 804(2) of title 5, United States Code (as added by section 251 of Pub. L. 104–121), specifies that a ''major rule'' is any rule that the Office of Management and Budget finds is likely to result in—

- An annual effect on the economy of $100 million or more;
- A major increase in costs or prices for consumers, individual industries, Federal, State, or local government agencies, or geographic regions; or
- Significant adverse effects on competition, employment, investment productivity, innovation, or on the ability of United States based enterprises to compete with foreign based enterprises in domestic and export markets.

The RFA requires agencies to analyze options for regulatory relief of small businesses. For purposes of the RFA, small entities include small businesses, nonprofit organizations, and small governmental jurisdictions. Most hospitals and most other providers and suppliers are small entities, either by nonprofit status or by having revenues of $6 million to $29 million in any 1 year. This rule affects only States directly. For purposes of the RFA, we do not consider States or individuals to be small entities. Therefore, the Secretary certifies that this rule will not have a significant economic impact on a substantial number of small entities.

Section 1915(g) of the Act provides for Medicaid coverage of a new optional State plan service, case management services, and permits those services to be targeted. This regulation incorporates that statutory provision in the Federal regulations.

Under section 1915(g) of the Act, States may, without securing a waiver, furnish case management services, or targeted case management services to specified Medicaid groups on a statewide basis or in a particular geographic area of the State by requesting approval of a State plan amendment. If a State elects to furnish case management services (or targeted case management services), FFP will be available to the State to assist individuals receiving Medicaid in gaining access to needed medical, social, educational, and other services. Thus, the Medicaid case management service adds value to services that would otherwise be received through Medicaid and other programs in the absence of Medicaid case management services. For example, case management services provided to women with a high risk pregnancy can prevent low birth weight infants and case management of chronic problems can reduce hospital emergency room visits. Individuals retain the right to select among qualified medical providers of case management (or targeted case management) services.

Ambiguity concerning what services are reimbursable as case management and targeted case management services has resulted in questionable cost shifting of services onto Medicaid, which increases costs. Although the Medicaid program will continue to pay

for case management and targeted case management services, this regulation clarifies and conforms to current statutory requirements of the regulatory definition. In fiscal year 2006, Federal and State expenditures for targeted case management services were $2,842 million. Table 1 contains the Federal and State expenditures for targeted case management. These amounts do not reflect changes that may have occurred in other services during the projection period as a result of the provision of case management services.

TABLE 1.—MEDICAID TARGETED CASE MANAGEMENT SPENDING

	2001	2002	2003	2004	2005	2006
Federal	1,176	1,384	1,641	1,628	1,620	1,643
State	837	1,020	1,118	1,092	1,185	1,199
Total	2,012	2,405	2,759	2,720	2,805	2,842

Source: CMS–64 Data
Data is reported by Federal fiscal year
All amounts in millions of dollars

Section 6052 of DRA 2005 specifies that FFP is only available for case management services or targeted case management services if there are no other third parties liable to pay for those services, including as reimbursement under a medical, social, educational, or other program. Due to this regulation, it is estimated that Federal Medicaid spending on case management and targeted case management services will be reduced by $1,280 million between FY 2008 and FY 2012. This reduction in spending is expected to occur as case management services spending that could be paid for by other third parties or other Federal programs, but received by the States as FFP, will no longer be reimbursable.

Due to this regulation, the Assistant Secretary for Resources and Technology estimates that Federal spending on title IV-E foster care services will increase by $369 million between FY 2008 and FY 2012. This increase is expected to occur because State foster care program expenditures on case management will no longer be reimbursed as Medicaid expenditures and would instead need to be paid by other Federal programs or payment sources.

We are unable to estimate additional net costs/savings that might result from case management under section 1915(g) of the Act for the following reasons. The use of case management services may result in increased access to other services, including those covered under Medicaid. Conversely, provision of case management services may work to lower both Federal and State costs by encouraging the use of cost-effective medical care through transitioning individuals out of institutions, referrals to qualified providers, and by discouraging inappropriate utilization of costly services such as emergency room care for routine procedures. The use of case management services also may eliminate unnecessary care and over-utilization of services. Further, by facilitating early treatment, the use of case management services can preclude the need for more costly ''last resort'' treatment alternatives.

Because it is estimated that Federal Medicaid spending on case management and targeted case management services will be reduced by $1,280 million between FY 2008 and FY 2012 (and thus the annual effect on the economy is $100 million or more), we have determined that this interim final rule with comment period is a major rule under Executive Order 12866. The Secretary certifies that this rule will not have a significant economic impact on a substantial number of small entities.

In addition, section 1102(b) of the Act requires us to prepare a regulatory impact analysis if a rule may have a significant impact on the operations of a substantial number of small rural hospitals. This analysis must conform to the provisions of section 604 of the RFA. For purposes of section 1102(b) of the Act, we define a small rural hospital as a hospital that is located outside of a Core-Based Statistical Area and has fewer than 100 beds. We have determined that this interim final rule with comment period will not have a significant effect on the operations of a substantial number of small rural hospitals because there will be no change in the administration of the provisions related to small rural hospitals. Therefore, the Secretary certifies that this rule will not have a significant impact on small rural hospitals and, accordingly, we are not preparing an analysis for section 1102(b) of the Act.

Section 202 of the Unfunded Mandates Reform Act of 1995 also requires that agencies assess anticipated costs and benefits before issuing any rule whose mandates require spending in any 1 year of $100 million in 1995 dollars, updated annually for inflation. That threshold level is currently approximately $120 million. This interim final rule with comment period has no consequential effect on State, local, or tribal governments or on the private sector.

Executive Order 13132 establishes certain requirements that an agency must meet when it promulgates a proposed rule (and subsequent final rule) that imposes substantial direct requirement costs on State and local governments, preempts State law, or otherwise has Federalism implications. Since this regulation does not impose any costs on State or local governments, the requirements of E.O. 13132 are not applicable.

Accounting Statement

As required by OMB Circular A–4 (available at *http://www.whitehouse.gov/omb/circulars/a004/a-4.pdf*), in table 2, we have prepared an accounting statement showing the classification of the savings associated with the provisions of this interim final rule with comment period. Tables 2 and 3 provide our best estimate of the savings to the Federal Government as a result of the changes presented in this interim final rule with comment period based on the estimate in the President's FY 2008 Budget that Federal Medicaid spending on case management and targeted case management services will be reduced by approximately $210 million in FY 2008 and will be reduced by $1,280 million between FY 2008 and FY 2012. All savings are classified as transfers from the State Government to Federal Government.

TABLE 2.—ACCOUNTING STATEMENT: CLASSIFICATION OF ESTIMATED SAVINGS, FROM FY 2008 TO FY 2012 (IN MILLIONS)

Category	Primary estimates	Year dollar	Units discount rate (percent)	Period covered
Federal Annualized Monetized (millions/year)	$252.6	2008	7	2008–2012
	254.5	.....	.....	.....
	.....	2008	.....	2008–2012
	256.0	.....	.....	.....
	.....	2008	0	2008–2012
From Whom to Whom?	State Government to Federal Government			

TABLE 3.—ANNUAL DISCOUNTED TRANSFERS—CASE MANAGEMENT RULE (IN MILLIONS)

Discount rate (percent)	2008	2009	2010	2011	2012	Total
0	210	230	250	280	310	1,280
3	204	217	229	249	267	1,166
7	196	201	204	214	221	1,036

In accordance with the provisions of Executive Order 12866, this regulation was reviewed by the Office of Management and Budget.

List of Subjects

42 CFR Part 431

Grant programs-health, Health facilities, Medicaid, Privacy, Reporting and recordkeeping requirements.

42 CFR Part 440

Grant programs-health, Medicaid.

42 CFR Part 441

Family planning, Grant programs-health, Infants and children, Medicaid, Penalties, Prescription drugs, Reporting and recordkeeping requirements.

■ For the reasons set forth in the preamble, the Centers for Medicare & Medicaid Services amends 42 CFR chapter IV, subchapter C as set forth below:

PART 431—STATE ORGANIZATION AND GENERAL ADMINISTRATION

■ 1. The authority citation for part 431 continues to read as follows:

Authority: Sec. 1102 of the Social Security Act (42 U.S.C. 1302).

■ 2. Section 431.51 is amended by—
■ A. Republishing the introductory text to paragraph (c).
■ B. Removing the colon and the word ''or'' at the end of paragraph (c)(2) and adding a semicolon and the word ''or'' in its place.
■ C. Removing the period at the end of paragraph (c)(3) and adding in its place a semicolon and the word ''or''.
■ D. Adding a new paragraph (c)(4).
The revisions read as follows:

§ 431.51 Free choice of providers.

* * * * *

(c) *Exceptions.* Paragraph (b) of this section does not prohibit the agency from—

* * * * *

(4) Limiting the providers who are available to furnish targeted case management services defined in § 440.169 of this chapter to target groups that consist solely of individuals with developmental disabilities or with chronic mental illness. This limitation may only be permitted so that the providers of case management services for eligible individuals with developmental disabilities or with chronic mental illness are capable of ensuring that those individuals receive needed services.

* * * * *

■ 3. Section 431.54 is amended by—
■ A. Revising paragraph (a).
■ B. Adding a new paragraph (g).
The revision and addition read as follows:

§ 431.54 Exceptions to certain State plan requirements.

(a) *Statutory basis*—(1) Section 1915(a) of the Act provides that a State shall not be deemed to be out of compliance with the requirements of sections 1902(a)(1), (10), or (23) of the Act solely because it has elected any of the exceptions set forth in paragraphs (b) and (d) through (f) of this section.

(2) Section 1915(g) of the Act provides that a State may provide, as medical assistance, targeted case management services under the plan without regard to the requirements of sections 1902(a)(1) and 1902(a)(10)(B) of the Act.

* * * * *

(g) *Targeted case management services.* The requirements of § 431.50(b) relating to the statewide operation of a State plan and § 440.240 of this chapter related to comparability of services do not apply with respect to targeted case management services defined in § 440.169 of this chapter.

PART 440—SERVICES: GENERAL PROVISIONS

■ 6. The authority citation for part 440 continues to read as follows:

Authority: Sec. 1102 of the Social Security Act (42 U.S.C. 1302).

■ 7. A new § 440.169 is added to subpart A to read as follows:

§ 440.169 Case management services.

(a) *Case management services* means services furnished to assist individuals, eligible under the State plan who reside in a community setting or are transitioning to a community setting, in gaining access to needed medical, social, educational, and other services, in accordance with § 441.18 of this chapter.

(b) T*argeted case management services* means case management services furnished without regard to the requirements of § 431.50(b) of this chapter (related to statewide provision of services) and § 440.240 (related to comparability). Targeted case management services may be offered to individuals in any defined location of the State or to individuals within targeted groups specified in the State plan.

(c) For purposes of case management services, individuals (except individuals between ages 22 and 64 in an IMD or

individuals who are inmates of public institutions) may be considered to be transitioning to a community setting during the last 60 consecutive days (or a shorter time period as specified by the State) of a covered long-term, institutional stay that is 180 consecutive days or longer in duration. For a covered, short-term, institutional stay of less than 180 consecutive days, individuals may be considered to be transitioning to a community setting during the last 14 days prior to discharge.

(d) The assistance that case managers provide in assisting eligible individuals obtain services includes—

(1) Comprehensive assessment and periodic reassessment of individual needs, to determine the need for any medical, educational, social, or other services. These assessment activities include the following:

(i) Taking client history.

(ii) Identifying the needs of the individual, and completing related documentation.

(iii) Gathering information from other sources, such as family members, medical providers, social workers, and educators (if necessary) to form a complete assessment of the eligible individual.

(2) Development (and periodic revision) of a specific care plan based on the information collected through the assessment, that includes the following:

(i) Specifies the goals and actions to address the medical, social, educational, and other services needed by the eligible individual.

(ii) Includes activities such as ensuring the active participation of the eligible individual and working with the individual (or the individual's authorized health care decision maker) and others to develop those goals.

(iii) Identifies a course of action to respond to the assessed needs of the eligible individual.

(3) Referral and related activities (such as scheduling appointments for the individual) to help the eligible individual obtain needed services, including activities that help link the individual with medical, social, and educational providers or other programs and services that are capable of providing needed services to address identified needs and achieve goals specified in the care plan.

(4) Monitoring and follow-up activities, including activities and contacts that are necessary to ensure that the care plan is effectively implemented and adequately addresses the needs of the eligible individual and which may be with the individual, family members, service providers, or other entities or individuals and conducted as frequently as necessary, and including at least one annual monitoring, to help determine whether the following conditions are met:

(i) Services are being furnished in accordance with the individual's care plan.

(ii) Services in the care plan are adequate.

(iii) There are changes in the needs or status of the eligible individual. Monitoring and follow-up activities include making necessary adjustments in the care plan and service arrangements with providers.

(e) Case management may include contacts with non-eligible individuals that are directly related to the identification of the eligible individual's needs and care, for the purposes of helping the eligible individual access services, identifying needs and supports to assist the eligible individual in obtaining services, providing case managers with useful feedback, and alerting case managers to changes in the eligible individual's needs.

§ 440.250 [Amended]

■ 8. Section 440.250 is amended by—

■ A. Adding and reserving paragraph (q).

■ B. Adding a new paragraph (r).

The addition reads as follows:

§ 440.250 Limits on comparability of services.

* * * * *

(q) [Reserved]

(r) If specified in the plan, targeted case management services may be limited to the following:

(1) Certain geographic areas within a State, without regard to the statewide requirements in § 431.50 of this chapter.

(2) Targeted groups specified by the State.

PART 441—SERVICES: REQUIREMENTS AND LIMITS APPLICABLE TO SPECIFIC SERVICES

■ 9. The authority citation for part 441 continues to read as follows:

Authority: Sec. 1102 of the Social Security Act (42 U.S.C. 1302).

■ 2. Section 441.10 is amended by adding a new paragraph (m) to read as follows:

§ 441.10 Basis.

* * * * *

(m) Section 1905(a)(19) and 1915(g) of the Act for case management services as set forth in § 441.18 and section 8435 of the Technical and Miscellaneous Revenue Act of 1988.

■ 10. A new § 441.18 is added to subpart A to read as follows:

§ 441.18 Case management services.

(a) If a State plan provides for case management services (including targeted case management services), as defined in § 440.169 of this chapter, the State must meet the following requirements:

(1) Allow individuals the free choice of any qualified Medicaid provider within the specified geographic area identified in the plan when obtaining case management services, in accordance with § 431.51 of this chapter, except as specified in paragraph (b) of this section.

(2) Not use case management (including targeted case management) services to restrict an individual's access to other services under the plan.

(3) Not compel an individual to receive case management services, condition receipt of case management (or targeted case management) services on the receipt of other Medicaid services, or condition receipt of other Medicaid services on receipt of case management (or targeted case management) services.

(4) Indicate in the plan that case management services provided in accordance with section 1915(g) of the Act will not duplicate payments made to public agencies or private entities under the State plan and other program authorities;

(5) Provide comprehensive case management services, on a one-to-one basis, to an individual through one case manager.

(6) Prohibit providers of case management services from exercising the agency's authority to authorize or deny the provision of other services under the plan.

(7) Require providers to maintain case records that document for all individuals receiving case management as follows:

(i) The name of the individual.

(ii) The dates of the case management services.

(iii) The name of the provider agency (if relevant) and the person providing the case management service.

(iv) The nature, content, units of the case management services received and whether goals specified in the care plan have been achieved.

(v) Whether the individual has declined services in the care plan.

(vi) The need for, and occurrences of, coordination with other case managers.

(vii) A timeline for obtaining needed services.

(viii) A timeline for reevaluation of the plan.

(8) Include a separate plan amendment for each group receiving case management services that includes the following:

(i) Defines the group (and any subgroups within the group) eligible to receive the case management services.

(ii) Identifies the geographic area to be served.

(iii) Describes the case management services furnished, including the types of monitoring.

(iv) Specifies the frequency of assessments and monitoring and provides a justification for those frequencies.

(v) Specifies provider qualifications that are reasonably related to the population being served and the case management services furnished.

(vi) Specifies the methodology under which case management providers will be paid and rates are calculated that employs a unit of service that does not exceed 15 minutes.

(vii) Specifies if case management services are being provided to Medicaid-eligible individuals who are in institutions (except individuals between ages 22 and 64 who are served in IMDs or individuals who are inmates of public institutions).

(viii) Specifies if case management services are being provided to individuals with long-term stays of 180 consecutive days or longer or to individuals with short-term stays of less than 180 consecutive days. When States choose to provide case management services to individuals in institutions to facilitate transition to the community, the State plan must include the following requirements:

(A) Specify the time period or other conditions under which case management may be provided in this manner. The time period that case management is provided in an institution must not exceed an individual's length of stay;

(B) Specify the case management activities and include an assurance that these activities are coordinated with and do not duplicate institutional discharge planning;

(C) Include an assurance that the amount, duration, and scope of the case management activities would be documented in an individual's plan of care which includes case management activities prior to and post-discharge, to facilitate a successful transition to community living; and

(D) Specify that case management is only provided by and reimbursed to community case management providers;

(E) Specify that Federal Financial Participation is only available to community providers and will not be claimed on behalf of an individual until discharge from the medical institution and enrollment in community services; and

(F) Describe the system and process the State will use to monitor providers' compliance with these provisions.

(9) Include a separate plan amendment for each subgroup within a group if any of the following differs among the subgroups:

(i) The case management services to be furnished;

(ii) The qualifications of case management providers; or

(iii) The methodology under which case management providers will be paid.

(b) If the State limits qualified providers of case management services for target groups of individuals with developmental disability or chronic mental illness, in accordance with § 431.51(a)(4) of this chapter, the plan must identify any limitations to be imposed on the providers and specify how these limitations enable providers to ensure that individuals within the target groups receive needed services.

(c) Case management does not include, and FFP is not available in expenditures for, services defined in § 440.169 of this chapter when any of the following conditions exist:

(1) Case management activities are an integral component of another covered Medicaid service.

(2) The case management activities constitute the direct delivery of underlying medical, educational, social, or other services to which an eligible individual has been referred, including, but not limited to, services under parole and probation programs, public guardianship programs, special education programs, child welfare/child protective services, and foster care programs.

(3) The activities are integral to the administration of foster care programs, including but not limited to the following:

(i) Research gathering and completion of documentation required by the foster care program.

(ii) Assessing adoption placements.

(iii) Recruiting or interviewing potential foster care parents.

(iv) Serving legal papers.

(v) Home investigations.

(vi) Providing transportation.

(vii) Administering foster care subsidies.

(viii) Making placement arrangements.

(4) The activities, for which an individual may be eligible, are integral to the administration of another non-medical program, such as a guardianship, child welfare/child protective services, parole, probation, or special education program except for case management that is included in an individualized education program or individualized family service plan consistent with section 1903(c) of the Act.

(5) Activities that meet the definition of case management services in § 440.169 and under the approved State plan cannot be claimed as administrative activities under § 433.15(b).

(d) After the State assesses whether the activities are within the scope of the case management benefit (applying the limitations described above), in determining the allowable costs for case management (or targeted case management) services that are also furnished by another federally-funded program, the State must use cost allocation methodologies, consistent with OMB Circular A–87, CMS policies, or any subsequent guidance and reflected in an approved cost allocation plan.

(Catalog of Federal Domestic Assistance Program, No. 93.778, Medical Assistance Program.)

Dated: June 23, 2006.

Mark B. McClellan,

Administrator, Centers for Medicare & Medicaid Services.

Approved: August 27, 2007.

Michael O. Leavitt,

Secretary.

[FR Doc. 07–5903 Filed 11–30–07; 8:45 am]

BILLING CODE 4120–01–P

DEPARTMENT OF COMMERCE

National Oceanic and Atmospheric Administration

50 CFR Part 300

RIN 0648–XD77

Notification of U.S. Fish Quotas and an Effort Allocation in the Northwest Atlantic Fisheries Organization (NAFO) Regulatory Area

AGENCY: National Marine Fisheries Service (NMFS), National Oceanic and Atmospheric Administration (NOAA), Commerce.

ACTION: Final rule.

SUMMARY: NMFS announces that fish quotas and an effort allocation are available for harvest by U.S. fishermen in the Northwest Atlantic Fisheries Organization (NAFO) Regulatory Area. This action is necessary to make

available to U.S. fishermen a fishing privilege on an equitable basis.

DATES: All fish quotas and the effort allocation are effective January 1, 2008, through December 31, 2008. Expressions of interest regarding U.S. fish quota allocations for all species except 3L shrimp will be accepted throughout 2008. Expressions of interest regarding the U.S. 3L shrimp quota allocation and the 3M shrimp effort allocation will be accepted through December 19, 2007.

ADDRESSES: Expressions of interest regarding the U.S. effort allocation and quota allocations should be made in writing to Patrick E. Moran in the NMFS Office of International Affairs, at 1315 East–West Highway, Silver Spring, MD 20910 (phone: 301–713–2276, fax: 301–713–2313, e–mail: *pat.moran@noaa.gov*).

Information relating to NAFO fish quotas, NAFO Conservation and Enforcement Measures, and the High Seas Fishing Compliance Act (HSFCA) Permit is available from Allison McHale, at the NMFS Northeast Regional Office at One Blackburn Drive, Gloucester, MA 01930 (phone: 978–281–9103, fax: 978–281–9135, e–mail: *allison.mchale@noaa.gov*) and from NAFO on the World Wide Web at *http://www.nafo.ca*.

FOR FURTHER INFORMATION CONTACT: Patrick E. Moran, 301–713–2276.

SUPPLEMENTARY INFORMATION:

Background

NAFO has established and maintains conservation measures in its Regulatory Area that include one effort limitation fishery as well as fisheries with total allowable catches (TACs) and member nation quota allocations. The principal species managed are cod, flounder, redfish, American plaice, halibut, capelin, shrimp, and squid. At the 2007 NAFO Annual Meeting, the United States received fish quota allocations for three NAFO stocks and an effort allocation for one NAFO stock to be fished during 2008. The species, location, and allocation (in metric tons or effort) of these U.S. fishing opportunities, as found in Annexes I.A, I.B, and I.C of the 2008 NAFO Conservation and Enforcement Measures, are as follows:

(1) Redfish	NAFO Division 3M	69 mt
(2) Squid (*Illex*)	NAFO Subareas 3 & 4	453 mt
(3) Shrimp	NAFO Division 3L	278 mt
(4) Shrimp	NAFO Division 3M	1 vessel/100 days

Additionally, U.S. vessels may be authorized to fish any available portion of the 385 mt allocation of oceanic redfish in NAFO Subarea 2 and Divisions 1F and 3K available to NAFO members that are not also members of the Northeast Atlantic Fisheries Commission. Fishing opportunities may also be authorized for U.S. fishermen in the ''Others'' category for: Division 3LNO yellowtail flounder (78 mt); Division 3NO white hake (500 mt); Division 3LNO skates (500 mt); and Division 3O redfish (100 mt). Procedures for obtaining NMFS authorization are specified below.

U.S. Fish Quota Allocations

Expressions of interest to fish for any or all of the U.S. fish quota allocations and ''Others'' category allocations in NAFO will be considered from U.S. vessels in possession of a valid HSFCA permit authorizing fishing in the NAFO Regulatory Area. All expressions of interest should be directed in writing to Patrick E. Moran (see **ADDRESSES**). Letters of interest from U.S. vessel owners should include the name, registration, and home port of the applicant vessel as required by NAFO in advance of fishing operations. In addition, any available information on intended target species and dates of fishing operations should be included. To ensure equitable access by U.S. vessel owners, NMFS may promulgate regulations designed to choose one or more U.S. applicants from among expressions of interest.

Note that vessels issued valid HSFCA permits under 50 CFR part 300 to fish in the NAFO Regulatory Area are exempt from multispecies permit, mesh size, effort–control, and possession limit restrictions, specified in 50 CFR 648.4, 648.80, 648.82 and 648.86, respectively, while transiting the U.S. exclusive economic zone (EEZ) with multispecies on board the vessel, or landing multispecies in U.S. ports that were caught while fishing in the NAFO Regulatory Area, provided:

(1) The vessel operator has a letter of authorization issued by the Regional Administrator on board the vessel;

(2) For the duration of the trip, the vessel fishes, except for transiting purposes, exclusively in the NAFO Regulatory Area and does not harvest fish in, or possess fish harvested in, or from, the U.S. EEZ;

(3) When transiting the U.S. EEZ, all gear is properly stowed in accordance with one of the applicable methods specified in 50 CFR 648.23(b); and

(4) The vessel operator complies with the HSFCA permit and all NAFO conservation and enforcement measures while fishing in the NAFO Regulatory Area.

U.S. 3M Effort Allocation

Expressions of interest in harvesting the U.S. portion of the 2008 NAFO 3M shrimp effort allocation (1 vessel/100 days) will be considered from owners of U.S. vessels in possession of a valid HSFCA permit. All expressions of interest should be directed in writing to Patrick E. Moran (see **ADDRESSES**).

Letters of interest from U.S. vessel owners should include the name, registration and home port of the applicant vessel as required by NAFO in advance of fishing operations. In the event that multiple expressions of interest are made by U.S. vessel owners, NMFS may promulgate regulations designed to choose one U.S. applicant from among expressions of interest.

NAFO Conservation and Management Measures

Relevant NAFO Conservation and Enforcement Measures include, but are not limited to, maintenance of a fishing logbook with NAFO–designated entries; adherence to NAFO hail system requirements; presence of an on–board observer; deployment of a functioning, autonomous vessel monitoring system; and adherence to all relevant minimum size, gear, bycatch, and other requirements. Further details regarding these requirements are available from the NMFS Northeast Regional Office, and can also be found in the current NAFO Conservation and Enforcement Measures on the Internet (see **ADDRESSES**).

Chartering Arrangements

In the event that no adequate expressions of interest in harvesting the U.S. portion of the 2008 NAFO 3L shrimp quota allocation and/or 3M shrimp effort allocation are made on behalf of U.S. vessels, expressions of interest will be considered from U.S. fishing interests intending to make use of vessels of other NAFO Parties under chartering arrangements to fish the 2008 U.S. quota allocation for 3L shrimp and/or the effort allocation for 3M shrimp. Under NAFO rules in effect through 2008, a vessel registered to another NAFO Contracting Party may be chartered to fish the U.S. effort allocation provided that written consent for the charter is obtained from the vessel's flag state and the U.S. allocation is transferred to that flag state. NAFO Parties must be notified of such a

chartering operation through a mail notification process.

A NAFO Contracting Party wishing to enter into a chartering arrangement with the United States must be in full current compliance with the requirements outlined in the NAFO Convention and Conservation and Enforcement Measures including, but not limited to, submission of the following reports to the NAFO Executive Secretary: provisional monthly catches within 30 days following the calendar month in which the catches were made; provisional daily catches of shrimp taken from Division 3L; provisional monthly fishing days in Division 3M within 30 days following the calendar month in which the catches were made; observer reports within 30 days following the completion of a fishing trip; and an annual statement of actions taken in order to comply with the NAFO Convention. Furthermore, the United States may also consider a Contracting Party's previous compliance with the NAFO incidental catch limits, as outlined in the NAFO Conservation and Enforcement Measures, before entering into a chartering arrangement.

Expressions of interest from U.S. fishing interests intending to make use of vessels from another NAFO Contracting Party under chartering arrangements should include information required by NAFO regarding the proposed chartering operation, including: the name, registration and flag of the intended vessel; a copy of the charter; the fishing opportunities granted; a letter of consent from the vessel's flag state; the date from which the vessel is authorized to commence fishing on these opportunities; and the duration of the charter (not to exceed six months). More details on NAFO requirements for chartering operations are available from NMFS (see **ADDRESSES**). In addition, expressions of interest for chartering operations should be accompanied by a detailed description of anticipated benefits to the United States. Such benefits might include, but are not limited to, the use of U.S. processing facilities/personnel; the use of U.S. fishing personnel; other specific positive effects on U.S. employment; evidence that fishing by the chartered vessel actually would take place; and documentation of the physical characteristics and economics of the fishery for future use by the U.S. fishing industry.

In the event that multiple expressions of interest are made by U.S. fishing interests proposing the use of chartering operations, the information submitted regarding benefits to the United States will be used in making a selection. In the event that applications by U.S. fishing interests proposing the use of chartering operations are considered, all applicants will be made aware of the allocation decision as soon as possible. Once the allocation has been awarded for use in a chartering operation, NMFS will immediately take appropriate steps to notify NAFO and transfer the U.S. 3L shrimp quota allocation and/or the 3M shrimp effort allocation to the appropriate Contracting Party.

After reviewing all requests for allocations submitted, NMFS may decide not to grant any allocations if it is determined that no requests meet the criteria described in this notice. All individuals/companies submitting expressions of interest to NMFS will be contacted if an allocation has been awarded. Please note that if the U.S. portion of the 2008 NAFO 3L shrimp quota allocation and/or 3M shrimp effort allocation is awarded to a U.S. vessel or a specified chartering operation, it may not be transferred without the express, written consent of NMFS.

Dated: November 27, 2007.

Rebecca Lent

Director, Office of International Affairs, National Marine Fisheries Service.

[FR Doc. E7–23518 Filed 12–3–07; 8:45 am]

BILLING CODE 3510–22–S

DEPARTMENT OF COMMERCE

National Oceanic and Atmospheric Administration

50 CFR Part 648

[Docket No. 061020273–7001–03]

RIN 0648–XE14

Fisheries of the Northeastern United States; Summer Flounder Fishery; Commercial Quota Harvested for Connecticut

AGENCY: National Marine Fisheries Service (NMFS), National Oceanic and Atmospheric Administration (NOAA), Commerce.

ACTION: Temporary rule; closure.

SUMMARY: NMFS announces that the 2007 summer flounder commercial quota allocated to the State of Connecticut has been harvested. Vessels issued a commercial Federal fisheries permit for the summer flounder fishery may not land summer flounder in Connecticut for the remainder of calendar year 2007, unless additional quota becomes available through a transfer from another state. Regulations governing the summer flounder fishery require publication of this notification to advise Connecticut that the quota has been harvested and to advise vessel permit holders and dealer permit holders that no commercial quota is available for landing summer flounder in Connecticut.

DATES: Effective 0001 hours, December 4, 2007, through 2400 hours, December 31, 2007.

FOR FURTHER INFORMATION CONTACT: Emily Bryant, Fishery Management Specialist, (978) 281–9244.

SUPPLEMENTARY INFORMATION: Regulations governing the summer flounder fishery are found at 50 CFR part 648. The regulations require annual specification of a commercial quota that is apportioned on a percentage basis among the coastal states from North Carolina through Maine. The process to set the annual commercial quota and the percent allocated to each state is described in § 648.100.

The initial total commercial quota for summer flounder for the 2007 calendar year was set equal to 7,789,800 lb (3,533 mt) (71 FR 75134, December 14, 2006). This quota was increased through an emergency action to 10,267,098 lb (4,658 mt) (72 FR 2458, January 19, 2007). The percent allocated to vessels landing summer flounder in Connecticut is 2.25708 percent, resulting in a commercial quota of 231,739 lb (106 mt). The 2007 allocation was reduced to 226,464 lb (103 mt) when research set-aside was deducted and then reduced to 209,994 (96 mt) after the 2006 overages had been applied.

Section 648.101(b) requires the Administrator, Northeast Region, NMFS (Regional Administrator) to monitor state commercial quotas and to determine when a state's commercial quota has been harvested. NMFS then publishes a notification in the **Federal Register** to advise the state and to notify Federal vessel and dealer permit holders that, effective upon a specific date, the state's commercial quota has been harvested and no commercial quota is available for landing summer flounder in that state. The Regional Administrator has determined, based upon dealer reports and other available information, that Connecticut has harvested its quota for 2007.

The regulations at § 648.4(b) provide that Federal permit holders agree, as a condition of the permit, not to land summer flounder in any state that the Regional Administrator has determined no longer has commercial quota available. Therefore, effective 0001 hours, December 4, 2007, further

landings of summer flounder in Connecticut by vessels holding summer flounder commercial Federal fisheries permits are prohibited for the remainder of the 2007 calendar year, unless additional quota becomes available through a transfer and is announced in the **Federal Register**. Effective 0001 hours, December 4, 2007, federally permitted dealers are also notified that they may not purchase summer flounder from federally permitted vessels that land in Connecticut for the remainder of the calendar year, or until additional quota becomes available through a transfer from another state.

Classification

This action is required by 50 CFR part 648 and is exempt from review under Executive Order 12866.

Authority: 16 U.S.C. 1801 *et seq.*

Dated: November 28, 2007.

Emily H. Menashes,

Acting Director, Office of Sustainable Fisheries, National Marine Fisheries Service.

[FR Doc. E7–23509 Filed 12–3–07; 8:45 am]

BILLING CODE 3510–22–S

DEPARTMENT OF COMMERCE

National Oceanic and Atmospheric Administration

50 CFR Part 648

[Docket No. 071106654–7655–01]

RIN 0648–AW20

Fisheries of the Northeastern United States; Regulatory Amendment to Modify Recordkeeping and Reporting and Observer Requirements; Correction

AGENCY: National Marine Fisheries Service (NMFS), National Oceanic and Atmospheric Administration (NOAA), Commerce.

ACTION: Final rule; correcting amendment.

SUMMARY: On April 23, 2007, NMFS published in the **Federal Register** a final rule to implement measures requiring observers for participating hagfish vessels in the **Federal Register** as part of the hagfish information collection program. On June 13, 2007, NMFS published a separate final rule that inadvertently deleted these regulations implemented in the April 23, 2007, rule. This correcting amendment corrects this error by reinstating the language regarding hagfish observer requirements.

DATES: Effective December 4, 2007.

FOR FURTHER INFORMATION CONTACT: Emily Bryant, Fishery Management Specialist, (978) 281–9244.

SUPPLEMENTARY INFORMATION: On October 3, 2006, the New England Fishery Management Council (Council) sent NMFS a request to prepare an information collection program for the Atlantic hagfish fishery under the provisions of section 402(a) of the Magnuson-Stevens Fishery Conservation and Management Act (Magnuson-Stevens Act). On April 23, 2007, in response to the Council's request, NMFS published a final rule to implement measures to modify the existing reporting and recordkeeping requirements for federally permitted seafood dealers/processors and the observer requirements for participating hagfish vessels in the **Federal Register** (72 FR 20036). The adjustments made to the at-sea sea sampler/observer coverage regulations at 50 CFR 648.11 through the April 23, 2007, final rule were inadvertently deleted when another final rule that revised the same section of regulations was published in the **Federal Register** on June 13, 2007 (72 FR 32549). This correcting amendment corrects this error by reinstating language previously added to 50 CFR 648.11, stating that under the hagfish information collection program, any vessel owner/operator that fishes for, catches, or lands hagfish, or intends to fish for, catch, or land hagfish in or from the exclusive economic zone (EEZ) will be required to carry an observer when requested by the Regional Administrator. This language is reinstated so as to maintain the regulatory text implementing Amendment 13 of the Atlantic Sea Scallop Fishery Management Plan.

Classification

Pursuant to 5 U.S.C. 553(b)(B), the Assistant Administrator finds good cause to waive prior notice and opportunity for additional public comment for this action because any delay of this action would be contrary to the public interest. As explained above, this rule reinstates regulatory text that had already been implemented but was unintentionally and inadvertently deleted during the implementation of another unrelated rule. Observer coverage is particularly important to determine potentially high discard rates that have been reported to occur in the hagfish fishery in order to determine what management measures may be necessary to reduce such discard. Further, without data collected from the observer program, the status of the stock can not be adequately determined and it is not possible to capture accurately the geographic and seasonal aspects of the fishery, which reflect overseas demand, and ensure that the resource may be sustained for future years. Without this information, future management efforts cannot be developed and, therefore, will be delayed unnecessarily. Such a delay may negatively impact commercial fishermen that fish for hagfish, who have reported that regional depletion in the fishery is occurring. Moreover, pursuant to 5 U.S.C. 553(d), the Assistant Administrator finds good cause to waive the 30-day delay in effective date for the reasons given above. Without data collected from the observer program, the status of the stock can not be adequately determined and it is not possible to capture accurately the geographic and seasonal aspects of the fishery, which reflect overseas demand, and ensure that the resource may be sustained for future years. Without this information, future management efforts cannot be developed and, therefore, will be delayed unnecessarily. Delaying the rule for 30 days may negatively impact fishermen who fish for hagfish and have observed regional depletion occurring in this fishery. In addition, the final rule that had added the subsequently deleted text had already been subjected to a 30-day delay in implementation and, therefore, an additional delay to correct the deletion is unnecessarily duplicative.

List of Subjects in 50 CFR Part 648

Fisheries, Fishing, Reporting and recordkeeping requirements.

Dated: November 28, 2007.

Samuel D. Rauch III,

Deputy Assistant Administrator For Regulatory Programs, National Marine Fisheries Service.

■ For the reasons set out in the preamble, 50 CFR part 648 is corrected by making a correcting amendment as follows:

PART 648—FISHERIES OF THE NORTHEASTERN UNITED STATES

1. The authority citation for part 648 continues to read as follows:

Authority: 16 U.S.C. 1801 *et seq.*

■ 2. In § 648.11, paragraph (a) is revised to read as follows:

§ 648.11 At-sea sampler/observer coverage.

(a) The Regional Administrator may request any vessel holding a permit for Atlantic sea scallops, NE multispecies, monkfish, skates, Atlantic mackerel, squid, butterfish, scup, black sea bass, bluefish, spiny dogfish, Atlantic herring, tilefish, or Atlantic deep-sea red crab; or

a moratorium permit for summer flounder; to carry a NMFS-certified fisheries observer. A vessel holding a permit for Atlantic sea scallops is subject to the additional requirements specific in paragraph (g) of this section. Also, any vessel or vessel owner/operator that fishes for, catches or lands hagfish, or intends to fish for, catch, or land hagfish in or from the exclusive economic zone must carry a NMFS-certified fisheries observer when requested by the Regional Administrator in accordance with the requirements of this section.

* * * * *

[FR Doc. E7–23513 Filed 12–3–07; 8:45 am]

BILLING CODE 3510–22–S

DEPARTMENT OF COMMERCE

National Oceanic and Atmospheric Administration

50 CFR Part 660

[Docket No. 060824226–6322–02]

RIN 0648–AW27

Magnuson-Stevens Act Provisions; Fisheries Off West Coast States; Pacific Coast Groundfish Fishery; Biennial Specifications and Management Measures; Inseason Adjustments

AGENCY: National Marine Fisheries Service (NMFS), National Oceanic and Atmospheric Administration (NOAA), Commerce.

ACTION: Final rule; inseason adjustments to biennial groundfish management measures; request for comments.

SUMMARY: This final rule announces inseason changes to management measures in the commercial Pacific Coast groundfish fishery. These actions, which are authorized by the Pacific Coast Groundfish Fishery Management Plan (FMP), are intended to allow fisheries to access more abundant groundfish stocks while protecting overfished and depleted stocks.

DATES: Effective 0001 hours (local time) December 4, 2007. Comments on this final rule must be received no later than 5 p.m., local time on January 3, 2008.

ADDRESSES: You may submit comments, identified by RIN 0648–AW27 by any one of the following methods:

- Electronic Submissions: Submit all electronic public comments via the Federal eRulemaking Portal *http://www.regulations.gov*.
- Fax: 206–526–6736, Attn: Gretchen Arentzen
- Mail: D. Robert Lohn, Administrator, Northwest Region, NMFS, 7600 Sand Point Way NE, Seattle, WA 98115–0070, Attn: Gretchen Arentzen.

Instructions: All comments received are a part of the public record and will generally be posted to *http://www.regulations.gov* without change. All Personal Identifying Information (for example, name, address, etc.) voluntarily submitted by the commenter may be publicly accessible. Do not submit Confidential Business Information or otherwise sensitive or protected information.

NMFS will accept anonymous comments. Attachments to electronic comments will be accepted in Microsoft Word, Excel, WordPerfect, or Adobe PDF file formats only.

FOR FURTHER INFORMATION CONTACT: Gretchen Arentzen (Northwest Region, NMFS), phone: 206–526–6147, fax: 206–526–6736 and e-mail *gretchen.arentzen@noaa.gov*.

SUPPLEMENTARY INFORMATION:

Electronic Access

This final rule is accessible via the Internet at the Office of the **Federal Register**'s Website at *http://www.gpoaccess.gov/fr/index.html*. Background information and documents are available at the Pacific Fishery Management Council's (Council's) website at *http://www.pcouncil.org/*.

Background

The Pacific Coast Groundfish FMP and its implementing regulations at title 50 in the Code of Federal Regulations (CFR), part 660, subpart G, regulate fishing for over 90 species of groundfish off the coasts of Washington, Oregon, and California. Groundfish specifications and management measures are developed by the Pacific Fishery Management Council (Council), and are implemented by NMFS. A proposed rule to implement the 2007–2008 specifications and management measures for the Pacific Coast groundfish fishery and Amendment 16–4 of the FMP was published on September 29, 2006 (71 FR 57764). The final rule to implement the 2007–2008 specifications and management measures for the Pacific Coast Groundfish Fishery was published on December 29, 2006 (71 FR 78638). These specifications and management measures were codified in the CFR (50 CFR part 660, subpart G). The final rule was subsequently amended on: March 20, 2007 (72 FR 13043); April 18, 2007 (72 FR 19390); July 5, 2007 (72 FR 36617); August 3, 2007 (72 FR 43193); September 18, 2007 (72 FR 53165); and October 4, 2007 (72 FR 56664).

Changes to current groundfish management measures implemented by this action were recommended by the Council, in consultation with Pacific Coast Treaty Indian Tribes and the States of Washington, Oregon, and California, at its November 5–9, 2007, meeting in San Diego, California. At that meeting, the Council recommended adjusting current groundfish management measures to respond to updated fishery information and other inseason management needs in order to allow access to groundfish without exceeding the 2007 optimum yields (OYs) for the target species or the 2007 OYs for overfished and depleted stocks.

For the remainder of 2007, the Council recommended increasing the 2-month cumulative limits for sablefish in the limited entry non-whiting trawl fishery for large and small footrope trawl gear north of 40°10.00′ N. lat., increasing trip limits for sablefish in the limited entry non-whiting trawl fishery south of 40°10.00′ N. lat., and increasing the open access sablefish daily trip limits between 40°10.00′ N. lat. and 36° N. lat.

The Council also recommended adjusting management measures beginning January 1, 2008; these measures will be implemented in a separate rulemaking.

NMFS has considered the recommendations for the remainder of 2007, and is implementing them as described below. Pacific Coast groundfish landings will be monitored throughout the remainder of the biennium, and further adjustments to trip limits or management measures may be made as necessary to allow achievement of, or to avoid exceeding, optimum yields (OYs).

Commercial Sablefish Fishery Management Measures

The Council considered adjustments to 2007 sablefish trip limits in the limited entry non-whiting trawl fishery and in the open access daily trip limit (DTL) fishery. At the Council's November 2007 meeting, an advisory body to the Council, the Groundfish Management Team (GMT), reviewed the best available data on estimates of landed catch and total mortality for the sablefish in the limited entry trawl and open access fisheries. These data, which estimated catch through the end of October, were compared to catch and mortality estimates modeled for these fisheries and were used to update catch predictions through the end of the year. Based on the Pacific Fishery Information Network's (PacFIN's) Quota

Species Monitoring (QSM) data, landed catch and total mortality data to date for 2007 have been lower than expected for: sablefish taken with large and small footrope trawl gear north of 40°10′ N. lat.; sablefish taken with trawl gear south of 40°10′ N. lat., and in the open access sablefish DTL fishery north of 36° N. lat. The Council considered increases to sablefish trip limits in these fisheries and the potential impacts on overall catch levels and overfished species.

The most recently updated catch projections for 2007 indicate 89 percent (2,380 mt out of 2,651 mt) of the trawl allocation of sablefish north of 36°, and 77 percent (350 mt out of 456 mt) of the open access allocation of sablefish is expected to be taken through the end of the year. This action would not increase estimated impacts on overfished species because estimated mortality for overfished species for 2007 assume that these sectors will achieve their sablefish allocations. Therefore, the Council recommended and NMFS is implementing: an increase in the limited entry trawl limits for large and small footrope trawl gear north of 40°10.00′ N. lat. from 22,000 lb (9,979 kg) per two months to 30,000 lb (13,608 kg) per two months; an increase in the sablefish trawl trip limits south of 40°10′ N. lat. from 22,000 lb (9,979 kg) per two months to 30,000 lb (13,608 kb) per two months; and an increase in the open access sablefish daily trip limits between 40°10.00′ N. lat. and 36° N. lat. from ''300 lb (136 kg) per day, or 1 landing per week of up to 700 lb (318 kg), not to exceed 2,100 lb (953 kg) per two months'' to ''300 lb (136 kg) per day, or 1 landing per week of up to 1,000 lb (454 kg), not to exceed 3,000 lb (1,360 kg) per two months'', beginning December 1 through the remainder of 2007.

Classification

These actions are taken under the authority of 50 CFR 660.370(c) and are exempt from review under Executive Order 12866.

These actions are authorized by the Pacific Coast groundfish FMP and its implementing regulations, and are based on the most recent data available. The aggregate data, upon which these actions are based, are available for public inspection at the Office of the Administrator, Northwest Region, NMFS, (see **ADDRESSES**) during business hours.

For the following reasons, NMFS finds good cause to waive prior public notice and comment on the revisions to groundfish management measures under 5 U.S.C. 553(b)(3)(B) because notice and comment would be impracticable and contrary to the public interest. Also for the same reasons, NMFS finds good cause to waive the 30-day delay in effectiveness pursuant to 5 U.S.C. 553(d)(1) and 5 U.S.C. 553(d)(3).

The data upon which these recommendations were based was provided to the Council and the Council made its recommendations at its November 5–9, 2007, meeting in San Diego, California. The Council recommended that these changes be implemented on or as close as possible to December 1, 2007. There was not sufficient time after that meeting to draft this document and undergo proposed and final rulemaking before these actions need to be in effect. For the actions to be implemented in this notice, affording the time necessary for prior notice and opportunity for public comment would be impractical and contrary to the public interest because it would prevent the Agency from managing fisheries using the best available science to approach without exceeding the OYs for federally managed species. The adjustments to management measures in this document affect commercial groundfish fisheries off Washington, Oregon, and California.

Changes to the sablefish cumulative limits for the rest of 2007 in the non-whiting commercial fisheries must be implemented as soon as possible to relieve a restriction by allowing fishermen increased opportunities to harvest available healthy stocks. Changes to sablefish cumulative limits for the following fisheries must be implemented as close as possible to December 1, 2007: (1) limited entry trawl fishery north and south of 40°10.00′ N. lat.; and (2) open access daily trip limit fishery between 40°10.00′ N. lat. and 36° N. lat. It would be contrary to the public interest to wait to implement these trip limit changes until after public notice and comment, because making these regulatory changes as soon as possible relieves an unnecessary regulatory restriction for fisheries that are important to coastal communities. For the same reasons, allowing a 30-day delay in effectiveness would be contrary to the public interest.

Delaying these changes would keep management measures in place that are not based on the best available data, which could risk fisheries exceeding OYs, or deny fishermen access to available harvest. Such delay would impair achievement of one of the Pacific Coast Groundfish FMP objectives of providing for year-round harvest opportunities or extending fishing opportunities as long as practicable during the fishing year.

List of Subjects in 50 CFR Part 660

Administrative practice and procedure, Fisheries, Fishing, Reporting and recordkeeping requirements.

Dated: November 28, 2007.

Emily H. Menashes

Acting Director, Office of Sustainable Fisheries, National Marine Fisheries Service.

■ For the reasons set out in the preamble, 50 CFR part 660 is amended as follows:

PART 660—FISHERIES OFF WEST COAST STATES

■ 1. The authority citation for part 660 continues to read as follows:

Authority: 16 U.S.C. 1801 *et seq.*

■ 2. Tables 3 (North) and 3 (South) to part 660, subpart G are revised to read as follows:

Table 3 (North) to Part 660, Subpart G -- 2007-2008 Trip Limits for Limited Entry Trawl Gear North of 40°10' N. Lat.

Other Limits and Requirements Apply -- Read § 660.301 - § 660.399 before using this table

112007

	JAN-FEB	MAR-APR	MAY-JUN	JUL-AUG	SEP-OCT	NOV-DEC
Rockfish Conservation Area (RCA)[6/]:						
North of 48°10.00' N. lat.	75 fm - modified 250 fm 7/	75 fm - 250 fm	shore - 150 fm		shore - 200 fm; 75 fm - 200 fm	75 fm - modified 200 fm 7/
48°10.00' N. lat. - 46°38.17' N. lat.			75 fm - 150 fm		75 fm - 200 fm	
46°38.17' N. lat. - 46°16.00 N. lat.			60 fm -150 fm		60 fm -200 fm	
46°16.00 N. lat. - 45°03.83 N. lat.			75 fm - 150 fm	75 fm - 200 fm		
45°03.83' N. lat. - 43°20.83' N. lat.			75 fm - 200 fm			
43°20.83' N. lat. - 42°40.50' N. lat.			shore - 200fm		75 fm - 200 fm	
42°40.50' N. lat. -40°10.00' N. lat.			75 fm - 200 fm			

Selective flatfish trawl gear is required shoreward of the RCA; all trawl gear (large footrope, selective flatfish trawl, and small footrope trawl gear) is permitted seaward of the RCA. Large footrope trawl gear is prohibited shoreward of the RCA. Midwater trawl gear is permitted only for vessels participating in the primary whiting season.

See § 660.370 and § 660.381 for Additional Gear, Trip Limit, and Conservation Area Requirements and Restrictions. See §§ 660.390-660.394 and §§ 660.396-660.399 for Conservation Area Descriptions and Coordinates (including RCAs, YRCA, CCAs, Farallon Islands, Cordell Banks, and EFHCAs).

State trip limits and seasons may be more restrictive than federal trip limits, particularly in waters off Oregon and California.

		JAN-FEB	MAR-APR	MAY-JUN	JUL-AUG	SEP-OCT	NOV-DEC
1	**Minor slope rockfish[2/] & Darkblotched rockfish**	4,000 lb/ 2 months		1,500 lb/ 2 months			
2	**Pacific ocean perch**	3,000 lb/ 2 months					
3	**DTS complex**						
4	Sablefish						
5	large & small footrope gear	13,000 lb/ 2 months		15,000 lb/ 2 months		22,000 lb/ 2 months	30,000 lb/ 2 months
6	selective flatfish trawl gear	5,000 lb/ 2 months	8,000 lb/ 2 months	5,000 lb/ 2 months			
7	multiple bottom trawl gear [8/]	5,000 lb/ 2 months	8,000 lb/ 2 months	5,000 lb/ 2 months			
8	Longspine thornyhead						
9	large & small footrope gear	22,000 lb/ 2 months			25,000 lb/ 2 months		
10	selective flatfish trawl gear	3,000 lb/ 2 months					
11	multiple bottom trawl gear [8/]	3,000 lb/ 2 months					
12	Shortspine thornyhead						
13	large & small footrope gear	7,500 lb/ 2 months		10,000 lb/ 2 months		12,000 lb/ 2 months	
14	selective flatfish trawl gear	3,000 lb/ 2 months					
15	multiple bottom trawl gear [8/]	3,000 lb/ 2 months					
16	Dover sole						
17	large & small footrope gear	80,000 lb/ 2 months		60,000 lb/ 2 months		95,000 lb/ 2 months	
18	selective flatfish trawl gear	40,000 lb/ 2 months		38,000 lb/ 2 months			25,000 lb/ 2 months
19	multiple bottom trawl gear [8/]	40,000 lb/ 2 months		38,000 lb/ 2 months			25,000 lb/ 2 months

TABLE 3 (North)

Table 3 (North). Continued

20	**Whiting**						TABLE 3 (North) con't
21	midwater trawl	Before the primary whiting season: CLOSED. -- During the primary season: mid-water trawl permitted in the RCA. See §660.373 for season and trip limit details. -- After the primary whiting season: CLOSED.					
22	large & small footrope gear	Before the primary whiting season: 20,000 lb/trip. -- During the primary season: 10,000 lb/trip. -- After the primary whiting season: 10,000 lb/trip.					
23	**Flatfish** (except Dover sole)						
24	Arrowtooth flounder						
25	large & small footrope gear	100,000 lb/ 2 months		Arrowtooth included within other flatfish limits - - see below			
26	selective flatfish trawl gear	90,000 lb/ 2 months					
27	multiple bottom trawl gear [8/]	90,000 lb/ 2 months					
28	Other flatfish [3/], English sole, starry flounder, & Petrale sole						
29	large & small footrope gear for Other flatfish [3/], English sole, & starry flounder	110,000 lb/ 2 months	110,000 lb/ 2 months, no more than 30,000 lb/ 2 months of which may be petrale sole.	110,000 lb/ 2 months (including arrowtooth), no more than 20,000 lb/ 2 months of which may be petrale sole.	150,000 lb/ 2 mo (including arrowtooth), no more than 20,000 lb/ 2 mo of which may be petrale sole.	150,000 lb/ 2 months (including arrowtooth)	
30	large & small footrope gear for Petrale sole	50,000 lb/ 2 months				40,000 lb/ 2 months	
31	selective flatfish trawl gear for Other flatfish [3/], English sole, & starry flounder	90,000 lb/ 2 months, no more than 16,000 lb/ 2 months of which may be petrale sole.	90,000 lb/ 2 months, no more than 25,000 lb/ 2 months of which may be petrale sole.	70,000 lb/ 2 months (including arrowtooth), no more than 20,000 lb/ 2 months of which may be petrale sole.	70,000 lb/ 2 months (including arrowtooth), no more than 15,000 lb/ 2 months of which may be petrale sole.	30,000 lb/ 2 months (including arrowtooth), no more than 8,000 lb/ 2 months of which may be petrale sole.	
32	selective flatfish trawl gear for Petrale sole						
33	multiple bottom trawl gear [8/]	90,000 lb/ 2 months, no more than 16,000 lb/ 2 months of which may be petrale sole.	90,000 lb/ 2 months, no more than 25,000 lb/ 2 months of which may be petrale sole.	70,000 lb/ 2 months (including arrowtooth), no more than 20,000 lb/ 2 months of which may be petrale sole.	70,000 lb/ 2 months (including arrowtooth), no more than 15,000 lb/ 2 months of which may be petrale sole.	30,000 lb/ 2 months (including arrowtooth), no more than 8,000 lb/ 2 months of which may be petrale sole.	
34	**Minor shelf rockfish [1/], Shortbelly, Widow & Yelloweye rockfish**						
35	midwater trawl for Widow rockfish	Before the primary whiting season: CLOSED. -- During primary whiting season: In trips of at least 10,000 lb of whiting, combined widow and yellowtail limit of 500 lb/ trip, cumulative widow limit of 1,500 lb/ month. Mid-water trawl permitted in the RCA. See §660.373 for primary whiting season and trip limit details. -- After the primary whiting season: CLOSED.					
36	large & small footrope gear	300 lb/ 2 months					
37	selective flatfish trawl gear	300 lb/ month		1,000 lb/ month, no more than 200 lb/ month of which may be yelloweye rockfish		300 lb/ month	
38	multiple bottom trawl gear [8/]	300 lb/ month		300 lb/ 2 months, no more than 200 lb/ month of which may be yelloweye rockfish		300 lb/ month	

Table 3 (North). Continued

39	**Canary rockfish**				
40	large & small footrope gear	CLOSED			
41	selective flatfish trawl gear	100 lb/ month	300 lb/ month	100 lb/ month	
42	multiple bottom trawl gear [8/]	CLOSED			
43	**Yellowtail**				
44	midwater trawl	Before the primary whiting season: CLOSED. -- During primary whiting season: In trips of at least 10,000 lb of whiting: combined widow and yellowtail limit of 500 lb/ trip, cumulative yellowtail limit of 2,000 lb/ month. Mid-water trawl permitted in the RCA. See §660.373 for primary whiting season and trip limit details. -- After the primary whiting season: CLOSED.			
45	large & small footrope gear	300 lb/ 2 months			
46	selective flatfish trawl gear	2,000 lb/ 2 months			
47	multiple bottom trawl gear [8/]	300 lb/ 2 months			
48	**Minor nearshore rockfish & Black rockfish**				
49	large & small footrope gear	CLOSED			
50	selective flatfish trawl gear	300 lb/ month			
51	multiple bottom trawl gear [8/]	CLOSED			
52	**Lingcod** [4/]				
53	large & small footrope gear	1,200 lb/ 2 months	4,000 lb/ 2 months		
54	selective flatfish trawl gear		1,200 lb/2 months		
55	multiple bottom trawl gear [8/]				
56	**Pacific cod**	30,000 lb/ 2 months	70,000 lb/ 2 months		30,000 lb/ 2 months
57	**Spiny dogfish**	200,000 lb/ 2 months	150,000 lb/ 2 months	100,000 lb/ 2 months	
58	**Other Fish** [5/]	Not limited			

TABLE 3 (North) con't

1/ Bocaccio, chilipepper and cowcod are included in the trip limits for minor shelf rockfish.
2/ Splitnose rockfish is included in the trip limits for minor slope rockfish.
3/ "Other flatfish" are defined at § 660.302 and include butter sole, curlfin sole, flathead sole, Pacific sanddab, rex sole, rock sole, and sand sole.
4/ The minimum size limit for lingcod is 24 inches (61 cm) total length.
5/ "Other fish" are defined at § 660.302 and include sharks, skates, ratfish, morids, grenadiers, and kelp greenling. Cabezon is included in the trip limits for "other fish."
6/ The Rockfish Conservation Area is a gear and/or sector specific closed area generally described by depth contours but specifically defined by lat/long coordinates set out at §§ 660.391-660.394.
7/ The "modified 200 fm" line is modified to exclude certain petrale sole areas from the RCA.
8/ If a vessel has both selective flatfish gear and large or small footrope gear on board during a cumulative limit period (either simultaneously or successively), the most restrictive cumulative limit for any gear on board during the cumulative limit period applies for the entire cumulative limit period.

To convert pounds to kilograms, divide by 2.20462, the number of pounds in one kilogram.

Table 3 (South) to Part 660, Subpart G -- 2007-2008 Trip Limits for Limited Entry Trawl Gear South of 40°10' N. Lat.

Other Limits and Requirements Apply -- Read § 660.301 - § 660.399 before using this table

112007

		JAN-FEB	MAR-APR	MAY-JUN	JUL-AUG	SEP-OCT	NOV-DEC
	Rockfish Conservation Area (RCA)[6/]:						
	40°10' - 38° N. lat.	100 fm - modified 200 fm [7/]	100 fm - 150 fm				100 fm - modified 200 fm [7/]
	38° - 34°27' N. lat.	100 fm - 150 fm					
	South of 34°27' N. lat.	100 fm - 150 fm along the mainland coast; shoreline - 150 fm around islands					
	All trawl gear (large footrope, selective flatfish trawl, and small footrope trawl gear) is permitted seaward of the RCA. Large footrope trawl gear is prohibited shoreward of the RCA. Midwater trawl gear is permitted only for vessels participating in the primary whiting season.						
	See § 660.370 and § 660.381 for Additional Gear, Trip Limit, and Conservation Area Requirements and Restrictions. See §§ 660.390-660.394 and §§ 660.396-660.399 for Conservation Area Descriptions and Coordinates (including RCAs, YRCA, CCAs, Farallon Islands, Cordell Banks, and EFHCAs).						
	State trip limits and seasons may be more restrictive than federal trip limits, particularly in waters off Oregon and California.						
1	**Minor slope rockfish[2/] & Darkblotched rockfish**						
2	40°10' - 38° N. lat.	15,000 lb/ 2 months			10,000 lb/ 2 months		15,000 lb/ 2 months
3	South of 38° N. lat.	40,000 lb/ 2 months				55,000 lb/ 2 months	
4	**Splitnose**						
5	40°10' - 38° N. lat.	15,000 lb/ 2 months			10,000 lb/ 2 months		15,000 lb/ 2 months
6	South of 38° N. lat.	40,000 lb/ 2 months					
7	**DTS complex**						
8	Sablefish	14,000 lb/ 2 months				22,000 lb/ 2 months	30,000 lb/ 2 months
9	Longspine thornyhead	22,000 lb/ 2 months				25,000 lb/ 2 months	
10	Shortspine thornyhead	7,500 lb/ 2 months				13,000 lb/ 2 months	
11	Dover sole	70,000 lb/ 2 months			80,000 lb/ 2 months	95,000 lb/ 2 months	
12	**Flatfish** (except Dover sole)						
13	Other flatfish[3/], English sole, & starry flounder						
14	40°10' - 38° N. lat.	110,000 lb/ 2 months	Other flatfish, English sole, starry flounder & Petrale sole: 110,000 lb/ 2 months, no more than 30,000 lb/ 2 months of which may be petrale sole.	Other flatfish, English sole, starry flounder, arrowtooth flounder & Petrale sole: 110,000 lb/ 2 months, no more than 25,000 lb/ 2 months of which may be petrale sole.		Other flatfish, English sole, starry flounder, arrowtooth flounder & Petrale sole: 150,000 lb/ 2 mo, no more than 25,000 lb/ 2 mo of which may be petrale sole.	150,000 lb/ 2 months (including arrowtooth)
15	South of 38° N. lat.						
16	Petrale sole	50,000 lb/ 2 months					50,000 lb/ 2 months
17	Arrowtooth flounder						
18	40°10' - 38° N. lat.	10,000 lb/ 2 months		Arrowtooth included within other flatfish limits - - see above			
19	South of 38° N. lat.						
20	**Whiting**						
21	midwater trawl	Before the primary whiting season: CLOSED. -- During the primary season: mid-water trawl permitted in the RCA. See §660.373 for season and trip limit details. -- After the primary whiting season: CLOSED.					
22	large & small footrope gear	Before the primary whiting season: 20,000 lb/trip. -- During the primary season: 10,000 lb/trip. -- After the primary whiting season: 10,000 lb/trip.					

TABLE 3 (South)

Table 3 (South). Continued

						TABLE 3 (South) con't
23	**Minor shelf rockfish[1/], Chilipepper, Shortbelly, Widow, & Yelloweye rockfish**					
24	large footrope or midwater trawl for Minor shelf rockfish & Shortbelly	300 lb/ month				
25	large footrope or midwater trawl for Chilipepper	2,000 lb/ 2 months	12,000 lb/ 2 months	8,000 lb/ 2 months		
26	large footrope or midwater trawl for Widow & Yelloweye	CLOSED				
27	small footrope trawl for Minor Shelf, Shortbelly, Widow & Yelloweye	300 lb/ month				
28	small footrope trawl for Chilipepper	500 lb/ month		800 lb/ month		
29	**Bocaccio**					
30	large footrope or midwater trawl	300 lb/ 2 months				
31	small footrope trawl	CLOSED				
32	**Canary rockfish**					
33	large footrope or midwater trawl	CLOSED				
34	small footrope trawl	100 lb/ month	300 lb/ month	100 lb/ month		
35	**Cowcod**	CLOSED				
36	**Minor nearshore rockfish & Black rockfish**					
37	large footrope or midwater trawl	CLOSED				
38	small footrope trawl	300 lb/ month				
39	**Lingcod[4/]**					
40	large footrope or midwater trawl	1,200 lb/ 2 months	4,000 lb/ 2 months			
41	small footrope trawl		1,200 lb/ 2 months			
42	**Pacific cod**	30,000 lb/ 2 months	70,000 lb/ 2 months		30,000 lb/ 2 months	
43	**Spiny dogfish**	200,000 lb/ 2 months	150,000 lb/ 2 months	100,000 lb/ 2 months		
44	**Other Fish[5/] & Cabezon**	Not limited				

1/ Yellowtail is included in the trip limits for minor shelf rockfish.
2/ POP is included in the trip limits for minor slope rockfish
3/ "Other flatfish" are defined at § 660.302 and include butter sole, curlfin sole, flathead sole, Pacific sanddab, rex sole, rock sole, and sand sole.
4/ The minimum size limit for lingcod is 24 inches (61 cm) total length.
5/ Other fish are defined at § 660.302 and include sharks, skates, ratfish, morids, grenadiers, and kelp greenling.
6/ The Rockfish Conservation Area is a gear and/or sector specific closed area generally described by depth contours but specifically defined by lat/long coordinates set out at §§ 660.391-660.394.
7/ The "modified 200 fm" line is modified to exclude certain petrale sole areas from the RCA.
To convert pounds to kilograms, divide by 2.20462, the number of pounds in one kilogram.

■ 3. Table 5 (South) to part 660, subpart G is revised to read as follows:

Table 5 (South) to Part 660, Subpart G -- 2007-2008 Trip Limits for Open Access Gears South of 40°10' N. Lat.

Other Limits and Requirements Apply -- Read § 660.301 - § 660.399 before using this table 112007

		JAN-FEB	MAR-APR	MAY-JUN	JUL-AUG	SEP-OCT	NOV-DEC
	Rockfish Conservation Area (RCA)[6/]:						
	40°10' - 34°27' N. lat.	30 fm - 150 fm					
	South of 34°27' N. lat.	60 fm - 150 fm (also applies around islands)					
	See § 660.370 and § 660.383 for Additional Gear, Trip Limit, and Conservation Area Requirements and Restrictions. See §§ 660.390-660.394 and §§ 660.396-660.399 for Conservation Area Descriptions and Coordinates (including RCAs, YRCA, CCAs, Farallon Islands, Cordell Banks, and EFHCAs).						
	State trip limits and seasons may be more restrictive than federal trip limits, particularly in waters off Oregon and California.						
1	**Minor slope rockfish[1/] & Darkblotched rockfish**						
2	40°10' - 38° N. lat.	Per trip, no more than 25% of weight of the sablefish landed					
3	South of 38° N. lat.	10,000 lb/ 2 months					
4	**Splitnose**	200 lb/ month					
5	**Sablefish**						
6	40°10' - 36° N. lat.	300 lb/ day, or 1 landing per week of up to 700 lb, not to exceed 2,100 lb/ 2 months					300 lb/ day, or 1 landing per week of up to 1,000 lb, not to exceed 3,000 lb/ 2 months
7	South of 36° N. lat.	300 lb/ day, or 1 landing per week of up to 700 lb			350 lb/ day, or 1 landing per week of up to 1,050 lb		
8	**Thornyheads**						
9	40°10' - 34°27' N. lat.	CLOSED					
10	South of 34°27' N. lat.	50 lb/ day, no more than 1,000 lb/ 2 months					
11	**Dover sole**	3,000 lb/month, no more than 300 lb of which may be species other than Pacific sanddabs. South of 42° N. lat., when fishing for "other flatfish," vessels using hook-and-line gear with no more than 12 hooks per line, using hooks no larger than "Number 2" hooks, which measure 11 mm (0.44 inches) point to shank, and up to two 1 lb (0.45 kg) weights per line are not subject to the RCAs.					
12	**Arrowtooth flounder**						
13	**Petrale sole**						
14	**English sole**						
15	**Starry flounder**						
16	**Other flatfish[2/]**						
17	**Whiting**	300 lb/ month					
18	**Minor shelf rockfish[1/], Shortbelly, Widow & Chilipepper rockfish**						
19	40°10' - 34°27' N. lat.	300 lb/ 2 months	CLOSED		200 lb/ 2 months	300 lb/ 2 months	
20	South of 34°27' N. lat.	750 lb/ 2 months			750 lb/ 2 months		
21	**Canary rockfish**	CLOSED					
22	**Yelloweye rockfish**	CLOSED					
23	**Cowcod**	CLOSED					
24	**Bocaccio**						
25	40°10' - 34°27' N. lat.	200 lb/ 2 months	CLOSED		100 lb/ 2 months	200 lb/ 2 months	
26	South of 34°27' N. lat.	100 lb/ 2 months			100 lb/ 2 months		

TABLE 5 (South)

Table 5 (South). Continued

27	**Minor nearshore rockfish & Black rockfish**							
28	Shallow nearshore	600 lb/ 2 months	CLOSED	800 lb/ 2 months	900 lb/ 2 months	800 lb/ 2 months	600 lb/ 2 months	
29	Deeper nearshore							
30	40°10' - 34°27' N. lat.	700 lb/ 2 months	CLOSED	700 lb/ 2 months		600 lb/ 2 months	700 lb/ 2 months	
31	South of 34°27' N. lat.	500 lb/ 2 months		600 lb/ 2 months				
32	California scorpionfish	600 lb/ 2 months	CLOSED	600 lb/ 2 months	800 lb/ 2 months		600 lb/ 2 months	
33	**Lingcod**[3/]	CLOSED		400 lb/ month				CLOSED
34	**Pacific cod**	1,000 lb/ 2 months						
35	**Spiny dogfish**	200,000 lb/ 2 months		150,000 lb/ 2 months	100,000 lb/ 2 months			
36	**Other Fish**[4/] **& Cabezon**	Not limited						
37	**RIDGEBACK PRAWN AND, SOUTH OF 38°57.50' N. LAT., CA HALIBUT AND SEA CUCUMBER NON-GROUNDFISH TRAWL**							
38	**NON-GROUNDFISH TRAWL Rockfish Conservation Area (RCA) for CA Halibut, Sea Cucumber & Ridgeback Prawn:**							
39	40°10' - 38° N. lat.	100 fm - modified 200 fm [6/]	100 fm - 150 fm				100 fm - modified 200 fm [6/]	
40	38° - 34°27' N. lat.	100 fm - 150 fm						
41	South of 34°27' N. lat.	100 fm - 150 fm along the mainland coast; shoreline - 150 fm around islands						
42		Groundfish: 300 lb/trip. Trip limits in this table also apply and are counted toward the 300 lb groundfish per trip limit. The amount of groundfish landed may not exceed the amount of the target species landed, except that the amount of spiny dogfish landed may exceed the amount of target species landed. Spiny dogfish are limited by the 300 lb/trip overall groundfish limit. The daily trip limits for sablefish coastwide and thornyheads south of Pt. Conception and the overall groundfish "per trip" limit may not be multiplied by the number of days of the trip. Vessels participating in the California halibut fishery south of 38°57.50' N. lat. are allowed to (1) land up to 100 lb/day of groundfish without the ratio requirement, provided that at least one California halibut is landed and (2) land up to 3,000 lb/month of flatfish, no more than 300 lb of which may be species other than Pacific sanddabs, sand sole, starry flounder, rock sole, curlfin sole, or California scorpionfish (California scorpionfish is also subject to the trip limits and closures in line 31).						
43	**PINK SHRIMP NON-GROUNDFISH TRAWL GEAR** *(not subject to RCAs)*							
44	South	**Effective April 1 - October 31:** Groundfish: 500 lb/day, multiplied by the number of days of the trip, not to exceed 1,500 lb/trip. The following sublimits also apply and are counted toward the overall 500 lb/day and 1,500 lb/trip groundfish limits: lingcod 300 lb/ month (minimum 24 inch size limit); sablefish 2,000 lb/ month; canary, thornyheads and yelloweye rockfish are PROHIBITED. All other groundfish species taken are managed under the overall 500 lb/day and 1,500 lb/trip groundfish limits. Landings of these species count toward the per day and per trip groundfish limits and do not have species-specific limits. The amount of groundfish landed may not exceed the amount of pink shrimp landed.						

TABLE 5 (South) con't

1/ Yellowtail rockfish is included in the trip limits for minor shelf rockfish and POP is included in the trip limits for minor slope rockfish.
2/ "Other flatfish" are defined at § 660.302 and include butter sole, curlfin sole, flathead sole, Pacific sanddab, rex sole, rock sole, and sand sole.
3/ The size limit for lingcod is 24 inches (61 cm) total length.
4/ "Other fish" are defined at § 660.302 and include sharks, skates, ratfish, morids, grenadiers, and kelp greenling.
5/ The Rockfish Conservation Area is a gear and/or sector specific closed area generally described by depth contours but specifically defined by lat/long coordinates set out at §§ 660.391-660.394, except that the 20-fm depth contour off California is defined by the depth contour and not coordinates.
6/ The "modified 200 fm" line is modified to exclude certain petrale sole areas from the RCA.
To convert pounds to kilograms, divide by 2.20462, the number of pounds in one kilogram.

[FR Doc. 07–5925 Filed 12–3–07; 8:45 am]
BILLING CODE 3510–22–C

Proposed Rules

Federal Register

Vol. 72, No. 232

Tuesday, December 4, 2007

This section of the FEDERAL REGISTER contains notices to the public of the proposed issuance of rules and regulations. The purpose of these notices is to give interested persons an opportunity to participate in the rule making prior to the adoption of the final rules.

DEPARTMENT OF TRANSPORTATION

Federal Aviation Administration

14 CFR Part 39

[Docket No. FAA–2007–0267; Directorate Identifier 2007–NM–245–AD]

RIN 2120–AA64

Airworthiness Directives; Boeing Model 747–400 and 747–400D Series Airplanes

AGENCY: Federal Aviation Administration (FAA), Department of Transportation (DOT).

ACTION: Notice of proposed rulemaking (NPRM).

SUMMARY: The FAA proposes to adopt a new airworthiness directive (AD) for certain Boeing Model 747–400 and 747–400D series airplanes. This proposed AD would require a general visual inspection of the power feeder wire bundle of the auxiliary power unit (APU) where it crosses the hydraulic system 4 return tube to determine if parts are installed to provide separation between the wire bundle and hydraulic tube. This proposed AD would also require related investigative and corrective actions if necessary. This proposed AD results from a report that the power feeder wire bundle of the APU was found touching the hydraulic system return tube during inspection of an airplane. We are proposing this AD to prevent insufficient clearance between the wire bundle and hydraulic tube that could lead to chafing of the wire bundle, which could cause arcing and a consequent hydraulic fluid fire in an area outside of the smoke detection and fire extinguishing zone; this condition could result in an uncontrolled fire on the airplane.

DATES: We must receive comments on this proposed AD by January 18, 2008.

ADDRESSES: You may send comments by any of the following methods:

- *Federal eRulemaking Portal:* Go to *http://www.regulations.gov.* Follow the instructions for submitting comments.
- *Fax:* 202–493–2251.
- *Mail:* U.S. Department of Transportation, Docket Operations, M–30, West Building Ground Floor, Room W12–140, 1200 New Jersey Avenue, SE., Washington, DC 20590.
- *Hand Delivery:* U.S. Department of Transportation, Docket Operations, M–30, West Building Ground Floor, Room W12–140, 1200 New Jersey Avenue, SE., Washington, DC 20590, between 9 a.m. and 5 p.m., Monday through Friday, except Federal holidays.

For service information identified in this AD, contact Boeing Commercial Airplanes, P.O. Box 3707, Seattle, Washington 98124–2207.

Examining the AD Docket

You may examine the AD docket on the Internet at *http://www.regulations.gov;* or in person at the Docket Management Facility between 9 a.m. and 5 p.m., Monday through Friday, except Federal holidays. The AD docket contains this proposed AD, the regulatory evaluation, any comments received, and other information. The street address for the Docket Office (telephone 800–647–5527) is in the **ADDRESSES** section. Comments will be available in the AD docket shortly after receipt.

FOR FURTHER INFORMATION CONTACT: Georgios Roussos, Aerospace Engineer, Systems and Equipment Branch, ANM–130S, FAA, Seattle Aircraft Certification Office, 1601 Lind Avenue, SW., Renton, Washington 98057–3356; telephone (425) 917–6482; fax (425) 917–6590.

SUPPLEMENTARY INFORMATION:

Comments Invited

We invite you to send any written relevant data, views, or arguments about this proposed AD. Send your comments to an address listed under the **ADDRESSES** section. Include ''Docket No. FAA–2007–0267; Directorate Identifier 2007–NM–245–AD'' at the beginning of your comments. We specifically invite comments on the overall regulatory, economic, environmental, and energy aspects of this proposed AD. We will consider all comments received by the closing date and may amend this proposed AD because of those comments.

We will post all comments we receive, without change, to *http://www.regulations.gov,* including any personal information you provide. We will also post a report summarizing each substantive verbal contact we receive about this proposed AD.

Discussion

We have received a report indicating that the power feeder wire bundle of the auxiliary power unit (APU) was found touching the hydraulic system return tube during inspection of an in-production Boeing Model 747–400 series airplane. Boeing subsequently surveyed several in-service airplanes and found that most of the airplanes had less than the allowable minimum clearance between the wire bundle and hydraulic tube. The wire bundle and hydraulic tube are installed in the aft bulk cargo compartment above the ceiling lining, in an area outside of the smoke detection and fire extinguishing zone. Insufficient clearance between the wire bundle and hydraulic tube could lead to chafing of the wire bundle, which could cause arcing and a consequent hydraulic fluid fire. This condition, if not corrected, could result in an uncontrolled fire on the airplane.

Relevant Service Information

We have reviewed Boeing Special Attention Service Bulletin 747–24–2257, Revision 1, dated August 2, 2007. The service bulletin describes procedures for doing a general visual inspection of the power feeder wire bundle of the APU where it crosses the hydraulic system 4 return tube to determine if parts are installed to provide separation between the wire bundle and hydraulic tube. The service bulletin also describes procedures for doing related investigative actions and corrective actions if necessary. The related investigative actions include the following actions:

- Measuring the clearance between the wire bundle and hydraulic tube to ensure that the clearance is a minimum of 0.5 inch, if the wire bundle is clamped directly above the hydraulic tube.
- Doing a general visual inspection for damage to the wire bundle where it crosses the hydraulic tube, if two loop clamps and a spacer are installed to provide separation, if a plastic tie strap and mount and loop clamp are installed to provide separation, or if no parts are installed to provide separation.
- Doing a general visual inspection for damage to the hydraulic tube where the wire bundle crosses the hydraulic

tube, if the wire bundle is found damaged. The corrective actions include the following actions:

- Adjusting the position of the wire bundle to maximize its separation from the hydraulic tube, if the clearance is less than 0.5 inch.
- Removing any parts installed to provide separation between the wire bundle and hydraulic tube.
- Repairing the damaged wire bundle.
- Repairing the damaged hydraulic tube or replacing it with a new hydraulic tube.
- Installing a tetrafluoroethylene sleeve on the wire bundle and attaching the wire bundle and hydraulic tube with two loop clamps and a spacer.

Accomplishing the actions specified in the service information is intended to adequately address the unsafe condition.

FAA's Determination and Requirements of the Proposed AD

We have evaluated all pertinent information and identified an unsafe condition that is likely to exist or develop on other airplanes of this same type design. For this reason, we are proposing this AD, which would require accomplishing the actions specified in the service information described previously.

Costs of Compliance

There are about 462 airplanes of the affected design in the worldwide fleet. This proposed AD would affect about 61 airplanes of U.S. registry. The proposed inspection would take about 1 work hour per airplane, at an average labor rate of $80 per work hour. Based on these figures, the estimated cost of the proposed AD for U.S. operators is $4,880, or $80 per airplane.

Authority for This Rulemaking

Title 49 of the United States Code specifies the FAA's authority to issue rules on aviation safety. Subtitle I, Section 106, describes the authority of the FAA Administrator. Subtitle VII, Aviation Programs, describes in more detail the scope of the Agency's authority.

We are issuing this rulemaking under the authority described in Subtitle VII, Part A, Subpart III, Section 44701, ''General requirements.'' Under that section, Congress charges the FAA with promoting safe flight of civil aircraft in air commerce by prescribing regulations for practices, methods, and procedures the Administrator finds necessary for safety in air commerce. This regulation is within the scope of that authority because it addresses an unsafe condition that is likely to exist or develop on products identified in this rulemaking action.

Regulatory Findings

We have determined that this proposed AD would not have federalism implications under Executive Order 13132. This proposed AD would not have a substantial direct effect on the States, on the relationship between the national Government and the States, or on the distribution of power and responsibilities among the various levels of government.

For the reasons discussed above, I certify that the proposed regulation:

1. Is not a ''significant regulatory action'' under Executive Order 12866;

2. Is not a ''significant rule'' under the DOT Regulatory Policies and Procedures (44 FR 11034, February 26, 1979); and

3. Will not have a significant economic impact, positive or negative, on a substantial number of small entities under the criteria of the Regulatory Flexibility Act.

We prepared a regulatory evaluation of the estimated costs to comply with this proposed AD and placed it in the AD docket. See the **ADDRESSES** section for a location to examine the regulatory evaluation.

List of Subjects in 14 CFR Part 39

Air transportation, Aircraft, Aviation safety, Safety.

The Proposed Amendment

Accordingly, under the authority delegated to me by the Administrator, the FAA proposes to amend 14 CFR part 39 as follows:

PART 39—AIRWORTHINESS DIRECTIVES

1. The authority citation for part 39 continues to read as follows:

Authority: 49 U.S.C. 106(g), 40113, 44701.

§ 39.13 [Amended]

2. The Federal Aviation Administration (FAA) amends § 39.13 by adding the following new airworthiness directive (AD):

Boeing: Docket No. FAA–2007–0267; Directorate Identifier 2007–NM–245–AD.

Comments Due Date

(a) The FAA must receive comments on this AD action by January 18, 2008.

Affected ADs

(b) None.

Applicability

(c) This AD applies to Boeing Model 747–400 and 747–400D series airplanes, certificated in any category; as identified in Boeing Special Attention Service Bulletin 747–24–2257, Revision 1, dated August 2, 2007.

Unsafe Condition

(d) This AD results from a report that the power feeder wire bundle of the auxiliary power unit (APU) was found touching the hydraulic system return tube during inspection of an airplane. We are issuing this AD to prevent insufficient clearance between the wire bundle and hydraulic tube that could lead to chafing of the wire bundle, which could cause arcing and a consequent hydraulic fluid fire in an area outside of the smoke detection and fire extinguishing zone; this condition could result in an uncontrolled fire on the airplane.

Compliance

(e) You are responsible for having the actions required by this AD performed within the compliance times specified, unless the actions have already been done.

Inspection and Related Investigative and Corrective Actions

(f) Within 24 months after the effective date of this AD, do a general visual inspection of the power feeder wire bundle of the APU where it crosses the hydraulic system 4 return tube to determine if parts are installed to provide separation between the wire bundle and hydraulic tube, and do all the related investigative and corrective actions as applicable, by accomplishing all of the actions specified in the Accomplishment Instructions of Boeing Special Attention Service Bulletin 747–24–2257, Revision 1, dated August 2, 2007. The related investigative and corrective actions must be accomplished before further flight after the inspection.

Credit for Actions Done According to Previous Issue of Service Bulletin

(g) Actions done before the effective date of this AD in accordance with Boeing Special Attention Service Bulletin 747–24–2257, dated May 18, 2006, are acceptable for compliance with the corresponding requirements of paragraph (f) of this AD.

Alternative Methods of Compliance (AMOCs)

(h)(1) The Manager, Seattle Aircraft Certification Office, FAA, has the authority to approve AMOCs for this AD, if requested in accordance with the procedures found in 14 CFR 39.19.

(2) To request a different method of compliance or a different compliance time for this AD, follow the procedures in 14 CFR 39.19. Before using any approved AMOC on any airplane to which the AMOC applies, notify your appropriate principal inspector (PI) in the FAA Flight Standards District Office (FSDO), or lacking a PI, your local FSDO.

Issued in Renton, Washington, on November 23, 2007.

Ali Bahrami,

Manager, Transport Airplane Directorate, Aircraft Certification Service.

[FR Doc. E7–23460 Filed 12–3–07; 8:45 am]

BILLING CODE 4910–13–P

DEPARTMENT OF TRANSPORTATION

Federal Aviation Administration

14 CFR Part 39

[Docket No. FAA–2007–28246; Directorate Identifier 2007–CE–048–AD]

RIN 2120–AA64

Airworthiness Directives; Cirrus Design Corporation Models SR20 and SR22 Airplanes

AGENCY: Federal Aviation Administration (FAA), DOT.

ACTION: Supplemental notice of proposed rulemaking (NPRM); Reopening of the comment period.

SUMMARY: We are revising an earlier proposed airworthiness directive (AD) that applies to certain Cirrus Design Corporation (CDC) Models SR20 and SR22 airplanes. The earlier NPRM would have required you to inspect and, as necessary, adjust the aileron and rudder rigging and would have required you to modify, inspect, and, as necessary, adjust the rudder-aileron interconnect system. The earlier NPRM resulted from a jamming of the aileron and rudder controls on a Model SR20 airplane, which resulted in loss of rudder and aileron flight controls. Since issuance of the NPRM, CDC revised the service information as a result of comments received on the NPRM, and the FAA has determined the changes to the service information are necessary to address the unsafe condition. The changes in the revised service information include the addition of airplanes to the Applicability; a requirement to check rudder, aileron, and rudder-aileron interconnect rigging; a requirement to replace the attaching hardware and clamp at the end of the rudder-aileron interconnect arm; and an increase in work-hours to do the proposed actions. This proposed AD would require you to use the revised service information and would require you to report any out-of-rig condition found. Since these actions impose an additional burden over that proposed in the NPRM, we are reopening the comment period to allow the public the chance to comment on these additional actions.

DATES: We must receive comments on this proposed AD by January 3, 2008.

ADDRESSES: Use one of the following addresses to comment on this proposed AD:

- *Federal eRulemaking Portal:* Go to *http://www.regulations.gov.* Follow the instructions for submitting comments.
- *Fax:* (202) 493–2251.
- *Mail:* U.S. Department of Transportation, Docket Operations, M–30, West Building Ground Floor, Room W12–140, 1200 New Jersey Avenue, SE., Washington, DC 20590.
- *Hand Delivery:* U.S. Department of Transportation, Docket Operations, M–30, West Building Ground Floor, Room W12–140, 1200 New Jersey Avenue, SE., Washington, DC 20590, between 9 a.m. and 5 p.m., Monday through Friday, except Federal holidays.

For service information identified in this proposed AD, contact Cirrus Design Corporation, 4515 Taylor Circle, Duluth, Minnesota 55811; telephone: (218) 727–2737; Internet address: *http://www.cirrusdesign.com.*

FOR FURTHER INFORMATION CONTACT: Wess Rouse, Aerospace Engineer, 2300 East Devon Avenue, Room 107, Des Plaines, Illinois 60018; telephone: (847) 294–8113; fax: (847) 294–7834.

SUPPLEMENTARY INFORMATION:

Comments Invited

We invite you to send any written relevant data, views, or arguments regarding this proposed AD. Send your comments to an address listed under the **ADDRESSES** section. Include the docket number, ''FAA–2007–28246; Directorate Identifier 2007–CE–048–AD'' at the beginning of your comments. We specifically invite comments on the overall regulatory, economic, environmental, and energy aspects of the proposed AD. We will consider all comments received by the closing date and may amend the proposed AD in light of those comments.

We will post all comments we receive, without change, to *http://www.regulations.gov,* including any personal information you provide. We will also post a report summarizing each substantive verbal contact we receive concerning this proposed AD.

Discussion

On June 14, 2007, we issued a proposal to amend part 39 of the Federal Aviation Regulations (14 CFR part 39) to include an AD that would apply to certain CDC Models SR20 and SR22 airplanes. This proposal was published in the **Federal Register** as a notice of proposed rulemaking (NPRM) on June 21, 2007 (72 FR 34198). The NPRM proposed to require you to inspect and, as necessary, adjust the aileron and rudder rigging and would require you to modify, inspect, and, as necessary, adjust the rudder-aileron interconnect system.

Comments

We provided the public the opportunity to participate in developing this AD. The following presents the comments received on the proposal and FAA's response to each comment:

Comment Issue No. 1: Language in the Summary of the NPRM Implies That the Control Jamming Event Only Occurs on the Ground

Mr. Gene Hudson and Ms. Bridgette Doremire state that language in the Summary of the NPRM improperly implies that the control jamming event only occurs on the ground. They contend that such language might encourage owners and operators to underestimate the risk. Hudson recommends deleting the language from the Summary.

We agree that the language of the Summary could imply that the control jamming event only occurs on the ground. To eliminate this implication, we will delete the language in the Summary that implies that the control jamming event only occurs on the ground.

Comment Issue No. 2: Remove Text From the Service Information That States the Control Jamming Event Has Not Been Seen on Aircraft With Flight Control Systems Rigged to Specifications

Hudson and Doremire state the service information text is misleading and implies that the jamming of the flight controls will only occur if the flight controls have been improperly rigged after leaving the factory. They claim that evidence exists of airplanes being improperly rigged at the factory or of flight controls jamming in the field after aircraft are rigged at the factory. Hudson recommends deleting the text from the service information or not referencing the service information in the proposed AD if the service information includes the misleading text.

We do not agree with the commenters. Although it is not known how the controls became improperly rigged, this is the reason the jamming occurred. The aileron and rudder controls have not jammed on a properly rigged airplane. The CDC has changed the rigging procedure to give more detailed instructions regarding the rigging procedure.

We are not changing the proposed AD as a result of this comment.

Comment Issue No. 3: Include Text in the Proposed AD That the Jamming Condition Can Occur at Positions Other Than Full Cross Control

Hudson and Doremire contend that the jamming condition can occur at positions other than full cross control.

The commenters claim that they have inspected several airplanes and have noted interference conditions during cross-control deflections at less than half-travel. We infer that the commenters want language in the proposed AD to reflect that the jamming condition can occur at positions other than full cross control.

There has been no evidence provided to show that there is a problem until full cross-control. The airplane that we inspected showed no interference until full cross control. One of the airplanes that the commenters discussed was reviewed by representatives of the FAA, CDC, and the National Transportation Safety Board (NTSB). It was determined that the airplane's rudder was improperly rigged. The CDC has revised procedures for rudder rigging to give more detailed instructions in the manufacturer's service bulletin.

We are not changing the proposed AD as a result of this comment.

Comment Issue No. 4: Proposed AD Gives the False Impression That the Jamming Condition Has Been Identified on Only One Airplane

Hudson and Doremire state that the proposed AD gives the impression that the jamming condition has been identified on only 1 airplane. Doremire claims to have seen the jamming condition on 12 airplanes. Hudson also states that a posting on an Internet Web site indicates that aircraft owners believe that the problem has only been found on 1 airplane.

The jammed condition initially occurred on 1 airplane. However, subsequent inspections have shown improper rigging on other airplanes.

We will revise the proposed AD to identify the occurrence of improper rigging on several airplanes.

Comment Issue No. 5: Issue the Proposed AD as an Emergency AD and Ground Any Airplane That Has Not Incorporated the Modifications Required by the AD

Hudson and Doremire contend that the urgency of the rudder-aileron interconnect problem has been understated. They want this AD action to be an Emergency AD and include the immediate grounding of any airplane that has not incorporated the modifications required by the AD.

Our risk assessment shows the rudder-aileron interconnect problem warrants NPRM AD action.

We are not changing the proposed AD as a result of this comment.

Comment Issue No. 6: Inspect for Clamp and Bungee Clamp Interference With Adjacent Control Cables; Implement a Solution to the Control System Interference

Hudson and Doremire state that there is a significant risk for flight control cable fraying with repeated clamp chafing, especially in airplanes used in flight training. Further, airplanes have potentially experienced chafing while doing normal crosswind takeoffs and landings. They recommend revising the proposed AD to require an inspection for clamp and bungee clamp interference with adjacent control cables, including a specific check for rudder, aileron, and elevator control cable fraying in the 12 inches adjacent to the forward and aft bungee clamps and the interconnect arm rudder clamp.

The commenters also recommend revising the proposed AD to implement a solution to the control system interference to prevent possible contact between the moving parts of the system throughout the full range of possible control travel.

We agree with the commenters that interference of the control cable mechanism should not occur. The manufacturer's service bulletin has been revised to add design changes to further increase clearances. In addition, more detailed rigging and inspection instructions have been added. Additionally, the revised service bulletin adds a redesigned clamp for the end of the interconnect arm.

We are incorporating the revised service bulletin into the proposed AD.

Comment Issue No. 7: Restrict Affected Aircraft From Forward and Side Slips, Power On and Off Stalls, Unusual Attitudes, Steep Turns, Slow Flight, and Any Takeoffs or Landings in Crosswind Conditions

Doremire strongly recommends restricting all affected aircraft from forward slips, side slips, power on and off stalls, unusual attitudes, steep turns, slow flight, and any takeoffs or landings in crosswind conditions. The commenter states that such restrictions would prevent in-flight loss of control.

The FAA disagrees with the recommendation. The restrictions that the commenter proposes will ground all CDC airplanes until incorporation of the AD actions. The data submitted so far shows that the binding of the controls has only occurred on misrigged airplanes and can be overcome by additional control forces. The risk assessment performed does not support these proposed restrictions.

We are not changing the proposed AD as a result of this comment.

Comment Issue No. 8: Special Flight Permit Limitations

Hudson recommends removal of the interconnect bungee as a condition for the issuance of a special flight permit. We conclude that the commenter recommends the requirement of a special flight permit with the above restriction.

We disagree that the restriction should be added to the AD. Evidence warranting this restriction for a special flight permit has not been shown. In the event that an aircraft has experienced a binding event, the aircraft should not be flown until the binding event is addressed/corrected. The Principal Inspector and/or Flight Standards District Office (FSDO) may always add this restriction on a case-by-case basis when issuing a special flight permit.

We are not changing the proposed AD as a result of this comment.

Comment Issue No. 9: Require Incorporation of Service Bulletin No. SB 2X–27–14 R3 Within the Listed Compliance Time and Allow an Extended Compliance Time for Those Who Have Already Done Service Bulletin No. SB2X–27–14 R2

CDC comments that aircraft complying with Service Bulletin No. SB2X–27–14 R2 minimizes the probability for the locking condition and meets the primary objective of the proposed AD. They request the proposed AD allow for an extended compliance period for those who have already done Service Bulletin No. SB2X–27–14 R2.

We disagree with CDC. The instructions listed in Service Bulletin No. SB2X–27–14 R2 do not include adequate rigging instructions for the rudder. Further, it is not known if the modified airplanes were rigged correctly. Also, additional improvements to the rudder/ailerons interconnect system were made that were not included in Service Bulletin No. SB2X–27–14 R2. The FAA has determined that the changes incorporated into Service Bulletin No. SB 2X–27–14 R3 are necessary to address the unsafe condition.

We are not changing the proposed AD as a result of this comment.

FAA's Determination and Requirements of This Proposed AD

We have carefully reviewed the available data and determined that the unsafe condition referenced in this document exists or could develop on other products of the same type design; and we should take AD action to correct this unsafe condition.

Certain changes described above in the comments expand the scope of the earlier NPRM. As a result, we have determined that it is necessary to reopen the comment period to provide additional opportunity for the public to comment on the proposed AD.

The Supplemental NPRM

Since issuance of the NPRM, CDC has issued Cirrus Service Bulletin No. SB 2X–27–14 R3, Revised: October 10, 2007.

The revised service information includes instructions that add new attaching parts, including an improved bungee clamp that replaces the existing Adel clamp at the end of the rudder-aileron interconnect arm; re-orient existing cable clamps 180 degrees at the RH rudder cable; clarify security of attaching parts and orientation of bungee cord ends; change the serial number effectivity for the Model SR20 airplane; and increase work-hours necessary to do the proposed action.

The FAA has determined that the changes incorporated into the service bulletin are necessary to address the unsafe condition. The added proposed AD actions following the revised service bulletin go beyond the scope of what was originally proposed in the NPRM. Therefore, we are reopening the comment period and allowing the public the chance to comment on these additional actions.

Costs of Compliance

We estimate that this proposed AD affects 2,435 airplanes in the U.S. registry.

We estimate the following costs to do the proposed check of the rudder, aileron, and rudder-aileron interconnect rigging, and replacement of the attaching hardware for the rudder-aileron interconnect arm and RH aileron cable clamps:

Labor cost	Parts cost	Total cost per airplane	Total cost on U.S. operators
1.5 work-hours x $80 per hour = $120	$18	$138	$336,030

CDC will provide warranty credit to the extent noted in Service Bulletin SB 2X–27–14 R3, Issued: May 9, 2007, Revised: October 10, 2007.

Authority for This Rulemaking

Title 49 of the United States Code specifies the FAA's authority to issue rules on aviation safety. Subtitle I, Section 106, describes the authority of the FAA Administrator. Subtitle VII, Aviation Programs, describes in more detail the scope of the Agency's authority.

We are issuing this rulemaking under the authority described in Subtitle VII, Part A, Subpart III, Section 44701, ''General requirements.'' Under that section, Congress charges the FAA with promoting safe flight of civil aircraft in air commerce by prescribing regulations for practices, methods, and procedures the Administrator finds necessary for safety in air commerce. This regulation is within the scope of that authority because it addresses an unsafe condition that is likely to exist or develop on products identified in this rulemaking action.

Regulatory Findings

We have determined that this proposed AD would not have federalism implications under Executive Order 13132. This proposed AD would not have a substantial direct effect on the States, on the relationship between the national Government and the States, or on the distribution of power and responsibilities among the various levels of government.

For the reasons discussed above, I certify that the proposed regulation:

1. Is not a ''significant regulatory action'' under Executive Order 12866;

2. Is not a ''significant rule'' under the DOT Regulatory Policies and Procedures (44 FR 11034, February 26, 1979); and

3. Will not have a significant economic impact, positive or negative, on a substantial number of small entities under the criteria of the Regulatory Flexibility Act.

We prepared a regulatory evaluation of the estimated costs to comply with this proposed AD and placed it in the AD docket.

Examining the AD Docket

You may examine the AD docket that contains the proposed AD, the regulatory evaluation, any comments received, and other information on the Internet at *http://dms.dot.gov;* or in person at the Docket Management Facility between 9 a.m. and 5 p.m., Monday through Friday, except Federal holidays. The Docket Office (telephone (800) 647–5227) is located at the street address stated in the **ADDRESSES** section. Comments will be available in the AD docket shortly after receipt.

List of Subjects in 14 CFR Part 39

Air transportation, Aircraft, Aviation safety, Safety.

The Proposed Amendment

Accordingly, under the authority delegated to me by the Administrator, the FAA proposes to amend 14 CFR part 39 as follows:

PART 39—AIRWORTHINESS DIRECTIVES

1. The authority citation for part 39 continues to read as follows:

Authority: 49 U.S.C. 106(g), 40113, 44701.

§ 39.13 [Amended]

2. The FAA amends § 39.13 by adding the following new AD:

Cirrus Design Corporation: Docket No. FAA–2007–28246; Directorate Identifier 2007–CE–048–AD.

Comments Due Date

(a) We must receive comments on this airworthiness directive (AD) action by January 3, 2008.

Affected ADs

(b) None.

Applicability

(c) This AD applies to Model SR20 airplanes, serial numbers (SN) 1005 through 1861, and Model SR22 airplanes, SN 0002 through 2333, SN 2335 through 2419, and SN 2421 through 2437, that are certificated in any category.

Unsafe Condition

(d) This AD results from an incident of jamming of the aileron and rudder controls on a Model SR20 airplane and the possibility of the occurrence on other airplanes. In addition, other Models SR20 and SR22 airplanes have been found with misrigging of the flight controls that could lead to jamming. We are issuing this AD to prevent the possibility of jamming of the rudder-aileron interconnect system, which may result in loss of rudder and aileron flight controls.

Compliance

(e) To address this problem, you must do the following, unless already done:

Actions	Compliance	Procedures
(1) Inspect/check the rudder, aileron, and rudder-aileron interconnect rigging; correct any out-of-rig condition; and replace the attaching hardware for the rudder-aileron interconnect arm.	At whichever occurs first: (i) Within the next 25 hours time-in-service (TIS) after the effective date of this AD; or (ii) Within the next 3 months after the effective date of this AD.	Follow Cirrus Service Bulletin No. SB 2X–27–14 R3, Issued: May 9, 2007, Revised: October 10, 2007.
(2) *Only if you find an out-of-rig condition:* Report to the FAA any out-of-rig conditions discovered as a result of the inspection required by paragraph (e)(1) of this AD on the form in Figure 1 of this AD. The Office of Management and Budget (OMB) approved the information contained in this regulation under the provisions of the Paperwork Reduction Act and assigned OMB Control Number 2120–0056.	At whichever occurs later: (i) Within 10 days after the inspection required in paragraph (e)(1) of this AD; or (ii) Within 10 days after the effective date of this AD.	Send the form (Figure 1 of this AD) to FAA, Manufacturing Inspection District Office, 6020 28th Avenue South, Room 103, Minneapolis, Minnesota, 55450–2700; telephone (612) 713–4366; facsimile (612) 713–4365.

Note: Temporary revisions to the airplane maintenance manuals (AMM), SR20 AMM Temporary Revision No. 27–1 and SR22 AMM Temporary Revision No. 27–1, both dated October 10, 2007, contain information pertaining to this subject.

DOCKET NO. FAA–2007–28246 INSPECTION REPORT

[Report only if you find an out-of-rig condition]

1. Inspection Performed By:	2. Telephone:
3. Aircraft Model:	4. Airplane Serial Number:
5. Aircraft Total Hours Time-in-Service:	6. Date of inspection required in paragraph (e)(1) of this AD:
7a. Do any of the aircraft logs contain entries describing flight control system maintenance, preventative maintenance, or alteration: ____Yes ____No	7b. If Yes, copy the log book entry(s) and include the date of the entry.

8. Inspection Results: (Report only if an out-of-rig condition is found, and describe the out-of-rig condition as accurate and detailed as possible):

9. Corrective Action Taken:

Send to:

Federal Aviation Administration
Manufacturing Inspection District Office 6020 28th Avenue South, Room 103
Minneapolis, Minnesota 55450–2700

Telephone (612) 713–4366
Facsimile (612) 713–4365

Alternative Methods of Compliance (AMOCs)

(g) The Manager, Chicago Aircraft Certification Office (ACO), FAA, has the authority to approve AMOCs for this AD, if requested using the procedures found in 14 CFR 39.19. Send information to ATTN: Wess Rouse, Aerospace Engineer, 2300 East Devon Avenue, Room 107, Des Plaines, Illinois 60018; telephone: (847) 294–8113; fax: (847) 294–7834. Before using any approved AMOC on any airplane to which the AMOC applies, notify your appropriate principal inspector (PI) in the FAA Flight Standards District Office (FSDO), or lacking a PI, your local FSDO.

Related Information

(h) To get copies of the service information referenced in this AD, contact Cirrus Design Corporation, 4515 Taylor Circle, Duluth, Minnesota 55811; telephone: (218) 727–2737; Internet address: *http://www.cirrusdesign.com.* To view the AD docket, go to the U.S. Department of Transportation, Docket Operations, M–30, West Building Ground Floor, Room W12–140, 1200 New Jersey Avenue, SE., Washington, DC 20590, or on the Internet at *http://dms.dot.gov.* The docket number is Docket No. FAA–2007–28246; Directorate Identifier 2007–CE–048–AD.

Issued in Kansas City, Missouri, on November 28, 2007.

Patrick R. Mullen,

Acting Manager, Small Airplane Directorate, Aircraft Certification Service.

[FR Doc. E7–23456 Filed 12–3–07; 8:45 am]

BILLING CODE 4910–13–P

DEPARTMENT OF HEALTH AND HUMAN SERVICES

Food and Drug Administration

21 CFR Parts 210 and 211

[Docket No. 1995N–0362]

Current Good Manufacturing Practice; Amendment of Certain Requirements For Finished Pharmaceuticals; Withdrawal

AGENCY: Food and Drug Administration, HHS

ACTION: Proposed rule; withdrawal.

SUMMARY: The Food and Drug Administration (FDA) is announcing the

withdrawal of a proposed rule published in the **Federal Register** of May 3, 1996 (61 FR 20103) (the May 1996 proposed rule). The May 1996 proposed rule would have amended certain requirements of the current good manufacturing practice (CGMP) regulations for finished pharmaceuticals. These proposed changes would have clarified certain manufacturing, quality control, and documentation requirements and would have updated the requirements for process and methods validation. In light of more recent scientific and technical advances and evolving quality systems and risk management concepts, FDA concludes that, at this time, it is appropriate to withdraw the May 1996 proposed rule and newly evaluate the issues raised in that proposal.

DATES: The proposed rule is withdrawn on December 4, 2007.

FOR FURTHER INFORMATION CONTACT:

Mary Malarkey, Center for Biologics Evaluation and Research (HFM–600), Food and Drug Administration, 1401 Rockville Pike, Rockville, MD 20852–1448, 301–827–6190, or

Dennis Bensley, Center for Veterinary Medicine (HFV–140), Food and Drug Administration, 7500 Standish Pl., Rockville, MD 20855, 301–827–6956, or

Frederick Blumenschein, Center for Drug Evaluation and Research (HFD–326), Food and Drug Administration, 11919 Rockville Pike, Rockville, MD 20852, 301–827–9022.

SUPPLEMENTARY INFORMATION:

I. Background

In the **Federal Register** of May 3, 1996 (61 FR 20103), FDA proposed to amend certain requirements of the CGMP regulations for finished pharmaceuticals in parts 210 and 211 (21 CFR parts 210 and 211) to clarify certain manufacturing, quality control, and documentation requirements so that the regulations would more accurately reflect the prevailing CGMP. FDA received approximately 1,500 comments on the proposed rule. (See section III of this document, Comments on the May 1996 Proposed Rule).

After publication of the May 1996 proposed rule, FDA began to reconsider its approach to regulation of CGMP, consistent with changes occurring in other industries and in other countries. This change in approach is summarized in the following paragraphs.

In August 2002, FDA announced a significant new initiative to enhance and modernize regulation of pharmaceutical manufacturing quality, the Pharmaceutical CGMPs for the 21st Century initiative (21st Century initiative). As a part of the 21st Century initiative, FDA created a CGMP Harmonization Analysis working group to analyze internal and external CGMP requirements, including those related to quality systems. The working group performed a formal analysis of parts 210 and 211 compared with other regulations, such as the FDA Medical Device Quality System Requirements, the FDA Food Hazard Analysis and Critical Control Points requirements, and the drug GMPs of the European Union, to identify the differences and consider the value of adding or changing the current regulations in light of these more recently developed and related product manufacturing standards.

Based on the working group's analysis, the agency decided that a different approach to revising the CGMP regulations was appropriate, and has decided to withdraw the proposed rule.

II. New Approach to Revising FDA's CGMP Regulations

The emphasis of the new approach to CGMP arising from the 21st Century Initiative will be to encourage timely detection of and response to emerging adverse trends or indications that product quality has been compromised, to provide further clarity and modernize the regulations, and to harmonize various aspects of parts 210 and 211 both internationally and with other agency regulations.[1]

The agency has determined that the current CGMP regulations (parts 210 and 211) provide a degree of flexibility that will permit the agency to continue to modernize its approach to regulation of CGMP. The agency has also concluded that, as stated in the final report on the 21st Century initiative, given this new approach to regulation of pharmaceutical CGMP, it would be preferable to revise the CGMP regulations in an incremental fashion, rather than using the comprehensive approach taken in the May 1996 proposed rule. After careful consideration, FDA concludes that at this time, it is appropriate to withdraw the May 1996 proposed rule and newly evaluate the issues raised in that proposal in the context of more recent scientific and technical advances and quality systems and risk management concepts.

[1]See Pharmaceutical CGMPs for the 21st Century—A Risk Based Approach; Final Report, September, 2004; available at *http://www.fda.gov/cder/gmp/gmp2004/GMP_finalreport2004.htm.*

We plan to revise the CGMP regulations using a more incremental approach. As part of the FDA's incremental approach to revising our CGMP regulations, we are publishing a direct final rule (and a companion proposed rule) elsewhere in this issue of the **Federal Register** that will, when finalized, clarify and modernize certain provisions in parts 210 and 211. That direct final rule and proposed rule include some of the minor changes to CGMP that were originally proposed in 1996.

III. Comments on the May 1996 Proposed Rule

FDA received approximately 1,500 comments on the May 1996 proposed rule from 116 pharmaceutical companies, attorneys, consultants, trade associations, and generic companies. The most significant topics on which FDA received comments are summarized as follows:

- Approximately 298 comments addressed the proposed new section on process validation (§ 211.220). The volume and variety of comments and suggestions indicated to FDA that the new section, as proposed, did not provide the clarification intended.
- Approximately 102 comments were directed at the proposed changes to § 211.110 on sampling and testing of in-process materials and drug products, which would have added new in-process sampling and validation requirements with respect to blend uniformity. The bulk of these comments questioned the need for additional testing and sampling requirements in § 211.110, because other sections of the current rule already require scientifically sound sampling plans and representative samples.
- Approximately 112 comments discussed proposed revisions to § 211.192 on the production, control, and laboratory review, and investigation of discrepancies. The May 1996 proposed rule required written procedures to be established for the review of certain records and investigation of unexplained discrepancies. Many of these comments recommended that these investigations and reviews should be used to proactively prevent (potential) future problems rather than being used only to retroactively identify manufacturing discrepancies.
- A number of comments to the rule were submitted by the compressed medical gas industry, which communicated concerns regarding the applicability to the compressed medical gas industry of the proposed changes to CGMP.

• Approximately 70 comments were received regarding the proposed new § 211.240 on control of chemical and physical contaminants. Many of the comments stated that the rule should be revised to better describe how contaminants will be identified and to provide allowances for threshold levels or limits of contaminants.

Overall, the comments were constructive, informative, and addressed nearly every area of the May 1996 proposed rule. Although we do not plan to publish specific responses to each of these comments, we will take these comments into account as we proceed to make incremental changes to parts 210 and 211.

IV. Withdrawal of the Proposed Rule

For the reasons described in this document, FDA is withdrawing the proposed rule published on May 3, 1996 (61 FR 20103).

Dated: November 26, 2007.

Jeffrey Shuren,

Assistant Commissioner for Policy.

[FR Doc. E7–23271 Filed 12–3–07; 8:45 am]

BILLING CODE 4160–01–S

DEPARTMENT OF HEALTH AND HUMAN SERVICES

Food and Drug Administration

21 CFR Parts 210 and 211

[Docket No. 2007N–0280]

Amendment to the Current Good Manufacturing Practice Regulations for Finished Pharmaceuticals; Companion Document to the Direct Final Rule

AGENCY: Food and Drug Administration, HHS.

ACTION: Proposed rule.

SUMMARY: The Food and Drug Administration (FDA) is publishing this companion proposed rule to the direct final rule, published elsewhere in this issue of the **Federal Register**, which is intended to amend certain sections of the regulations as the first phase of an incremental approach to modifying the current good manufacturing practice (CGMP) regulations for finished pharmaceuticals.

DATES: Submit written or electronic comments on or before February 19, 2008.

ADDRESSES: You may submit comments, identified by Docket No. 2007N–0280, by any of the following methods:

Electronic Submissions

Submit electronic comments in the following ways:

• Federal eRulemaking Portal: *http://www.regulations.gov*. Follow the instructions for submitting comments.

• Agency Web site: *http://www.fda.gov/dockets/ecomments*. Follow the instructions for submitting comments on the agency Web site.

Written Submissions

Submit written submissions in the following ways:

• FAX: 301–827–6870.

• Mail/Hand delivery/Courier [For paper, disk, or CD–ROM submissions]: Division of Dockets Management (HFA–305), Food and Drug Administration, 5630 Fishers Lane, rm. 1061, Rockville, MD 20852.

To ensure more timely processing of comments, FDA is no longer accepting comments submitted to the agency by e-mail. FDA encourages you to continue to submit electronic comments by using the Federal eRulemaking Portal or the agency Web site, as described previously, in the **ADDRESSES** portion of this document under *Electronic Submissions*.

Instructions: All submissions received must include the agency name and Docket No(s). and Regulatory Information Number (RIN) (if a RIN number has been assigned) for this rulemaking. All comments received may be posted without change to *http://www.fda.gov/ohrms/dockets/default.htm*, including any personal information provided. For additional information on submitting comments, see the ''Comments'' heading of the **SUPPLEMENTARY INFORMATION** section of this document.

Docket: For access to the docket to read background documents or comments received, go to *http://www.fda.gov/ohrms/dockets/default.htm* and insert the docket number(s), found in brackets in the heading of this document, into the ''Search'' box and follow the prompts and/or go to the Division of Dockets Management, 5630 Fishers Lane, rm. 1061, Rockville, MD 20852.

FOR FURTHER INFORMATION CONTACT:

Mary Malarkey, Center for Biologics Evaluation and Research (HFM–600), Food and Drug Administration, 1401 Rockville Pike, Rockville, MD 20852–1448, 301–827–6190, or

Dennis Bensley, Center for Veterinary Medicine (HFV–140), Food and Drug Administration, 7500 Standish Pl., Rockville, MD 20855, 301–827–6956, or

Frederick Blumenschein, Center for Drug Evaluation and Research (HFD–326), Food and Drug Administration, 11919 Rockville Pike, Rockville, MD 20852, 301–827–9022.

SUPPLEMENTARY INFORMATION:

I. Background

Since the development of the CGMP regulations in 1962, FDA has balanced the need for easily understood minimum standards with the need to encourage innovation and the development of improved manufacturing technologies. We strive to give manufacturers latitude to determine how to achieve the level of control necessary for CGMP compliance, recognizing that, in some instances, more direction from FDA is necessary to provide a uniform standard to the entire industry or because of the potential for harm or the narrow range of acceptable means to accomplish a particular CGMP objective. FDA periodically reassesses and revises the CGMP regulations to accommodate advances in technology that further safeguard the drug manufacturing process and the public health. As technology and scientific knowledge related to CGMP evolve, so does understanding of the material, equipment, and process variables, as well as the operational procedures and oversight methods that must be defined and controlled to achieve assurance of drug product quality.

In 1996, as part of this reassessment process, FDA proposed to amend certain requirements of the CGMP regulations for finished pharmaceuticals to clarify certain manufacturing, quality control, and documentation requirements, and to ensure that the regulations more accurately encompass current industry practice (61 FR 20103, May 3, 1996) (1996 proposed rule)). Subsequently, as a part of the risk-based pharmaceutical CGMPs for the 21st century initiative, FDA created a CGMP Harmonization Analysis Working Group (CGMP Working Group) to analyze related CGMP requirements in effect in the United States and internationally, including those related to quality systems. The CGMP Working Group compared parts 210 amd 211 (21 CFR parts 210 and 211) with the GMPs of the European Union (EU), as well as other FDA regulations (e.g., the Quality Systems Regulation, 21 CFR part 820) to identify the differences and consider the value of supplementing or changing the current regulations. Based on the CGMP Working Group's analysis, we decided to take an incremental approach to modifying parts 210 and 211 (see *http://www.fda.gov/cder/gmp/gmp2004/GMP_finalreport2004.htm#_Toc84065744*).

Because of this change in approach, FDA decided not to finalize the 1996

proposed rule. Therefore, elsewhere in this issue of the **Federal Register**, we are publishing a notice withdrawing the 1996 proposed rule.

The amendments being proposed in this rule are intended to clarify and modernize the CGMP regulations, as well as harmonize the regulations with international GMP requirements and other FDA regulations. This proposed rule represents the first increment of modifications to parts 210 and 211.

II. Additional Information

This proposed rule is a companion to the direct final rule published in the final rule section of this issue of the **Federal Register**. The proposed rule and the direct final rule are substantively identical. This companion proposed rule provides the procedural framework to proceed with standard notice-and-comment rulemaking if the direct final rule receives significant adverse comment and is withdrawn. A significant adverse comment is one that explains why the rule would be inappropriate, including challenges to the rule's underlying premise or approach, or would be ineffective or unacceptable without a change. The comment period for the companion proposed rule runs concurrently with the comment period of the direct final rule. Any comments received on this companion proposed rule will also be treated as comments on the direct final rule and vice versa.

For additional information, see the corresponding direct final rule published in the final rules section of this issue of the **Federal Register**. All persons who may wish to comment should review the rationale for these amendments set out in the preamble discussion of the direct final rule. A comment recommending a rule change in addition to this rule will not be considered a significant adverse comment unless the comment states why this rule would be ineffective without the additional change. If no significant adverse comment is received in response to the direct final rule, no further action will be taken related to this companion proposed rule. Instead, we will publish a confirmation notice within 30 days after the comment period ends, and we intend the direct final rule to become effective 30 days after publication of the confirmation notice. If we receive significant adverse comments, we will withdraw the direct final rule. We will proceed to respond to all of the comments received regarding the direct final rule, treating those comments as comments to this proposed rule. The agency will address the comments in a subsequent final rule. We will not provide additional opportunity for comment.

III. Analysis of Impacts

A. Review Under Executive Order 12866, the Regulatory Flexibility Act, and the Unfunded Mandates Reform Act of 1995

FDA has examined the impacts of this proposed rule under Executive Order 12866 and the Regulatory Flexibility Act (5 U.S.C. 601–612), and the Unfunded Mandates Reform Act of 1995 (Public Law 104–4). Executive Order 12866 directs agencies to assess all costs and benefits of available regulatory alternatives and, when regulation is necessary, to select regulatory approaches that maximize net benefits (including potential economic, environmental, public health and safety, and other advantages; distributive impacts; and equity). The agency believes that this proposed rule is not a significant regulatory action as defined by the Executive order, because the rule, if finalized, would generally either clarify the agency's longstanding interpretation of, or increase latitude for manufacturers in complying with, preexisting CGMP requirements.

The Regulatory Flexibility Act requires agencies to analyze regulatory options that would minimize any significant impact of a rule on small entities. Because this proposed rule, if finalized, would not impose any new regulatory obligations, the agency tentatively certifies that it would not have a significant economic impact on a substantial number of small entities.

Section 202(a) of the Unfunded Mandates Reform Act of 1995 requires that agencies prepare a written statement, which includes an assessment of anticipated costs and benefits, before proposing ''any rule that includes any Federal mandate that may result in the expenditure by State, local, and tribal governments, in the aggregate, or by the private sector, of $100,000,000 or more (adjusted annually for inflation) in any one year.'' The current threshold after adjustment for inflation is $122 million, using the most current (2005) Implicit Price Deflator for the Gross Domestic Product. FDA does not expect this proposed rule to result in any 1-year expenditure that would meet or exceed this amount.

The purpose of this proposed rule is to update the codified language to reflect current practice and to harmonize requirements in the CGMP regulations with requirements in other regulations. It would not impose any additional requirements; therefore, industry would not incur incremental compliance costs for these proposed changes.

B. Environmental Impact

It is FDA's tentative conclusion that issuing these clarifying amendments to the CGMP regulations would not have a significant impact on the human environment. Therefore, FDA believes that an environmental impact statement is not required.

C. Federalism

FDA has analyzed this proposed rule in accordance with the principles set forth in Executive Order 13132. FDA has determined that the rule does not contain policies that have substantial direct effects on the States, on the relationship between the National Government and the States, or on the distribution of power and responsibilities among the various levels of government. Accordingly, the agency has tentatively concluded that the rule does not contain policies that have federalism implications as defined in the Executive order and, consequently, a federalism summary impact statement is not required.

IV. Paperwork Reduction Act of 1995

The provisions of this proposed rule contain requirements that were submitted for review and approval to the Director of the Office of Management and Budget (OMB), as required by section 3507(d) of the Paperwork Reduction Act of 1995. The requirements were approved and assigned OMB control number 0910–0139.

V. Request for Comments

Interested persons may submit to the Division of Dockets Management (see **ADDRESSES**) written or electronic comments regarding this document. This comment period runs concurrently with the comment period for the direct final rule. Submit a single copy of electronic comments or two paper copies of any mailed comments, except that any individuals may submit one paper copy. Comments are to be identified with the docket number found in brackets in the heading of this document. Received comments may be seen in the Division of Dockets Management between 9 a.m. and 4 p.m., Monday through Friday.

List of Subjects

21 CFR Part 210

Drugs, Packaging and containers

21 CFR Part 211

Drugs, Labeling, Laboratories, Packaging and containers, Prescription

drugs, Reporting and recordkeeping requirements, Warehouses.

Therefore, under the Federal Food, Drug, and Cosmetic Act and under authority delegated to the Commissioner of Food and Drugs, it is proposed that 21 CFR parts 210 and 211 be amended as follows:

PART 210—CURRENT GOOD MANUFACTURING PRACTICE IN MANUFACTURING, PROCESSING, PACKING, OR HOLDING OF DRUGS; GENERAL

1. The authority citation for 21 CFR part 210 continues to read as follows:

Authority: 21 U.S.C. 321, 351, 352, 355, 360b, 371, 374; 42 U.S.C. 216, 262, 263a, 264.

2. Section 210.3 is amended by revising paragraph (b)(6) to read as follows:

§ 210.3 Definitions.

(b) * * *

(6) Nonfiber releasing filter means any filter, which after appropriate pretreatment such as washing or flushing, will not release fibers into the component or drug product that is being filtered.

* * * * *

PART 211—CURRENT GOOD MANUFACTURING PRACTICE FOR FINISHED PHARMACEUTICALS

3. The authority citation for 21 CFR part 211 continues to read as follows:

Authority: 21 U.S.C. 321, 351, 352, 355, 360b, 371, 374; 42 U.S.C. 216, 262, 263a, 264.

4. Section 211.48 is amended by revising paragraph (a) to read as follows:

§ 211.48 Plumbing.

(a) Water supplied by the plumbing system of the facility must be safe for human consumption. This water shall be supplied under continuous positive pressure in a plumbing system free of defects that could contribute contamination to any drug product.

* * * * *

5. Section 211.67 is amended by revising paragraph (a) to read as follows:

§ 211.67 Equipment cleaning and maintenance.

(a) Equipment and utensils shall be cleaned, maintained, and sanitized and/or sterilized at appropriate intervals to prevent malfunctions or contamination that would alter the safety, identity, strength, quality, or purity of the drug product beyond the official or other established requirements.

* * * * *

6. Section 211.68 is amended by adding paragraph (c) to read as follows:

§ 211.68 Automatic, mechanical, and electronic equipment.

* * * * *

(c) Such automated equipment used for performance of operations addressed by §§ 211.101(c) or (d), 211.103, 211.182, or 211.188(b)(11) can satisfy the requirements included in those sections relating to the performance of an operation by one person and checking by another person if such equipment is used in conformity with this section and one person verifies that the operations addressed in those sections are performed accurately by such equipment.

7. Section 211.72 is revised to read as follows:

§ 211.72 Filters.

Filters for liquid filtration used in the manufacture, processing, or packing of injectable drug products intended for human use shall not release fibers into such products. Fiber-releasing filters may not be used in the manufacture, processing, or packing of these injectable drug products unless it is not possible to manufacture such drug products without the use of such filters. If use of a fiber-releasing filter is necessary, an additional nonfiber-releasing filter of 0.22 micron maximum mean porosity (0.45 micron if the manufacturing conditions so dictate) shall subsequently be used to reduce the content of particles in the injectable drug product.

8. Section 211.82 is amended by revising paragraph (b) to read as follows:

§ 211.82 Receipt and storage of untested components, drug product containers, and closures.

* * * * *

(b) Components, drug product containers, and closures shall be stored under quarantine until they have been tested or examined, whichever is appropriate, and released. Storage within the area shall conform to the requirements of § 211.80.

9. Section 211.84 is amended by revising paragraphs (c)(1), (d)(3), and (d)(6) to read as follows:

§ 211.84 Testing and approval or rejection of components, drug product containers, and closures.

* * * * *

(c) * * *

(1) The containers of components selected shall be cleaned when necessary in a manner to prevent introduction of contaminants into the component.

* * * * *

(d) * * *

(3) Containers and closures shall be tested for conformity with all appropriate written specifications. In lieu of such testing by the manufacturer, a certificate of testing may be accepted from the supplier, provided that at least a visual identification is conducted on such containers/closures by the manufacturer and provided that the manufacturer establishes the reliability of the supplier's test results through appropriate validation of the supplier's test results at appropriate intervals.

* * * * *

(6) Each lot of a component, drug product container, or closure with potential for microbiological contamination that is objectionable in view of its intended use shall be subjected to microbiological tests before use.

* * * * *

10. Section 211.94 is amended by revising paragraph (c) as follows:

§ 211.94 Drug product containers and closures.

* * * * *

(c) Drug product containers and closures shall be clean and, where indicated by the nature of the drug, sterilized and processed to remove pyrogenic properties to assure that they are suitable for their intended use. Such depyrogenation processes shall be validated.

* * * * *

11. Section 211.101 is amended by revising paragraphs (c) and (d) to read as follows:

§ 211.101 Charge-in of components.

* * * * *

(c) Weighing, measuring, or subdividing operations for components shall be adequately supervised. Each container of component dispensed to manufacturing shall be examined by a second person to assure that:

(1) The component was released by the quality control unit;

(2) The weight or measure is correct as stated in the batch production records;

(3) The containers are properly identified. If the weighing, measuring, or subdividing operations are performed by automated equipment under § 211.68, only one person is needed to assure paragraphs (c)(1), (c)(2), and (c)(3) of this section.

(d) Each component shall either be added to the batch by one person and verified by a second person or, if the components are added by automated equipment under § 211.68, only verified by one person.

12. Section 211.103 is revised to read as follows:

§ 211.103 Calculation of yield.

Actual yields and percentages of theoretical yield shall be determined at the conclusion of each appropriate phase of manufacturing, processing, packaging, or holding of the drug product. Such calculations shall either be performed by one person and independently verified by a second person, or, if the yield is calculated by automated equipment under § 211.68, be independently verified by one person.

13. Section 211.110 is amended by revising paragraph (a) introductory text and by adding paragraph (a)(6) to read as follows:

§ 211.110 Sampling and testing of in-process materials and drug products.

(a) To assure batch uniformity and integrity of drug products, written procedures shall be established and followed that describe the in-process controls, and tests, or examinations to be conducted on appropriate samples of in-process materials of each batch. Such control procedures shall be established to monitor the output and to validate the performance of those manufacturing processes that may be responsible for causing variability in the characteristics of in-process material and the drug product. Such control procedures shall include, but are not limited to, the following, where appropriate:

* * * * *

(6) Bioburden testing.

* * * * *

14. Section 211.113 is amended by revising paragraph (b) to read as follows:

§ 211.113 Control of microbiological contamination.

* * * * *

(b) Appropriate written procedures, designed to prevent microbiological contamination of drug products purporting to be sterile, shall be established and followed. Such procedures shall include validation of all aseptic and sterilization processes.

15. Section 211.160 is amended by revising paragraph (b)(1) to read as follows:

§ 211.160 General requirements.

* * * * *

(b) * * *

(1) Determination of conformity to applicable written specifications for the acceptance of each lot within each shipment of components, drug product containers, closures, and labeling used in the manufacture, processing, packing, or holding of drug products. The specifications shall include a description of the sampling and testing procedures used. Samples shall be representative and adequately identified. Such procedures shall also require appropriate retesting of any component, drug product container, or closure that is subject to deterioration.

* * * * *

16. Section 211.182 is revised to read as follows:

§ 211.182 Equipment cleaning and use log.

A written record of major equipment cleaning, maintenance (except routine maintenance such as lubrication and adjustments), and use shall be included in individual equipment logs that show the date, time, product, and lot number of each batch processed. If equipment is dedicated to manufacture of one product, then individual equipment logs are not required, provided that lots or batches of such product follow in numerical order and are manufactured in numerical sequence. In cases where dedicated equipment is employed, the records of cleaning, maintenance, and use shall be part of the batch record. The persons performing and double-checking the cleaning and maintenance (or, if the cleaning and maintenance is performed using automated equipment under § 211.68, just the person verifying the cleaning and maintenance done by the automated equipment) shall date and sign or initial the log indicating that the work was performed. Entries in the log shall be in chronological order.

17. Section 211.188 is amended by revising paragraph (b)(11) to read as follows:

§ 211.188 Batch production and control records.

* * * * *

(b) * * *

(11) Identification of the persons performing and directly supervising or checking each significant step in the operation, or if a significant step in the operation is performed by automated equipment under § 211.68, the identification of the person checking the significant step performed by the automated equipment.

* * * * *

Dated: November 26, 2007.

Jeffrey Shuren,

Assistant Commissioner for Policy.

[FR Doc. E7–23292 Filed 12–3–07; 8:45 am]

BILLING CODE 4160–01–S

DEPARTMENT OF HOMELAND SECURITY

Coast Guard

33 CFR Part 117

[Docket No. USCG–2007–0096]

RIN 1625–AA09

Drawbridge Operation Regulations; Pinellas Bayway Structure ''E'' (SR 679) Bridge, Gulf Intracoastal Waterway, mile 113, St. Petersburg Beach, Pinellas County, FL

AGENCY: Coast Guard, DHS.

ACTION: Notice of proposed rulemaking.

SUMMARY: The Coast Guard proposes to change the drawbridge regulation of the Pinellas Bayway Structure ''E'' (SR 679) Bridge, Gulf Intracoastal Waterway, mile 113, St. Petersburg Beach, Pinellas County, Florida. This rule is needed to provide vehicular traffic relief during heavy vehicular traffic periods flowing into a nearby county park while still meeting the reasonable needs of mariners.

DATES: Comments and related material must reach the Coast Guard on or before January 18, 2008.

ADDRESSES: You may submit comments identified by Coast Guard docket number USCG–2007–0096 to the Docket Management Facility at the U.S. Department of Transportation. To avoid duplication, please use only one of the following methods:

(1) Online: *http://www.regulations.gov*.

(2) Mail: Docket Management Facility (M–30), U.S. Department of Transportation, West Building, Ground Floor, Room W12–140, 1200 New Jersey Avenue, SE., Washington, DC 20590–0001.

(3) Hand delivery: Room W12–140 on the Ground Floor of the West Building, 1200 New Jersey Avenue, SE., Washington, DC 20590, between 9 a.m. and 5 p.m., Monday through Friday, except Federal holidays. The telephone number is 202–366–9329.

(4) Fax: 202–493–2251.

FOR FURTHER INFORMATION CONTACT: If you have questions on this proposed rule, call Michael Lieberum, Seventh Coast Guard District, Bridge Branch, telephone number 305–415–6744. If you have questions on viewing or submitting material to the docket, call Renee V. Wright, Program Manager, Docket Operations, telephone 202–366–9826.

SUPPLEMENTARY INFORMATION:

Public Participation and Request for Comments

We encourage you to participate in this rulemaking by submitting comments and related materials. All comments received will be posted, without change, to *http://www.regulations.gov* and will include any personal information you have provided. We have an agreement with the Department of Transportation (DOT) to use the Docket Management Facility. Please see DOT's ''Privacy Act'' paragraph below.

Submitting Comments

If you submit a comment, please include the docket number for this rulemaking (USCG–2007–0096), indicate the specific section of this document to which each comment applies, and give the reason for each comment. We recommend that you include your name and a mailing address, an e-mail address, or a phone number in the body of your document so that we can contact you if we have questions regarding your submission. You may submit your comments and material by electronic means, mail, fax, or delivery to the Docket Management Facility at the address under **ADDRESSES**; but please submit your comments and material by only one means. If you submit them by mail or delivery, submit them in an unbound format, no larger than 8½ by 11 inches, suitable for copying and electronic filing. If you submit them by mail and would like to know that they reached the Facility, please enclose a stamped, self-addressed postcard or envelope. We will consider all comments and material received during the comment period. We may change this proposed rule in view of them.

Viewing Comments and Documents

To view comments, as well as documents mentioned in this preamble as being available in the docket, go to *http://www.regulations.gov* at any time, click on ''Search for Dockets,'' and enter the docket number for this rulemaking (USCG–2007–0096) in the Docket ID box, and click enter. You may also visit the Docket Management Facility in Room W12–140 on the ground floor of the DOT West Building, 1200 New Jersey Avenue, SE., Washington, DC 20590, between 9 a.m. and 5 p.m., Monday through Friday, except Federal holidays.

Privacy Act

Anyone can search the electronic form of all comments received into any of our dockets by the name of the individual submitting the comment (or signing the comment, if submitted on behalf of an association, business, labor union, etc.). You may review the Department of Transportation's Privacy Act Statement in the **Federal Register** published on April 11, 2000 (65 FR 19477), or you may visit *http://DocketsInfo.dot.gov*.

Public Meeting

We do not now plan to hold a public meeting. But you may submit a request for a meeting by writing to the Bridge Branch, Seventh Coast Guard District at the address under **ADDRESSES** explaining why one would be beneficial. If we determine that one would aid this rulemaking, we will hold one at a time and place announced by a later notice in the **Federal Register**.

Background and Purpose

The Pinellas Bayway Structure ''E'' (SR 679) Bridge, Gulf Intracoastal Waterway, mile 113, St. Petersburg Beach, Pinellas County, Florida, currently opens on signal; except that, from 9 a.m. to 7 p.m. the draw need only open on the hour, 20 minutes after the hour, and 40 minutes after the hour. The bridge provides vehicular access into and out of a popular county park.

At the request of Florida State Representative Frishe's office, who is acting on behalf of local citizens, the Coast Guard is proposing this regulation that will require the Pinellas Bayway ''E'' Bridge to open on signal, except that from 7 a.m. to 9 p.m. the bridge will open on the hour and half-hour. Public vessels of the United States, tugs with tows and vessels in distress shall be allowed to pass on signal.

Discussion of Proposed Rule

Under this proposed rule, the draw of the Pinellas Bayway Structure ''E'' Bridge would be required to open on signal, except that from 7 a.m. to 9 p.m. the bridge would only need to open on the hour and half-hour. The draw would be required to open, upon proper signal, for the passage of tugs with tows, public vessels of the United States and vessels in a situation where a delay would endanger life or property.

This proposed rule is expected to provide vehicular traffic relief during heavy traffic periods by allowing two openings an hour instead of the current three openings an hour.

Regulatory Evaluation

This proposed rule is not a ''significant regulatory action'' under section 3(f) of Executive Order 12866, Regulatory Planning and Review, and does not require an assessment of potential costs and benefits under section 6(a)(3) of that Order. The Office of Management and Budget has not reviewed it under that Order. It is not ''significant'' under the regulatory policies and procedures of the Department of Homeland Security.

We expect the economic impact of this proposed rule to be so minimal that a full Regulatory Evaluation is unnecessary, because the rule would allow for scheduled bridge openings of this drawbridge and all waterway restrictions or closure times would be published with adequate time for mariners to plan accordingly.

Small Entities

Under the Regulatory Flexibility Act (5 U.S.C. 601–612), we have considered whether this proposed rule would have a significant economic impact on a substantial number of small entities. The term ''small entities'' comprises small businesses, not-for-profit organizations that are independently owned and operated and are not dominant in their fields, and governmental jurisdictions with populations of less than 50,000.

The Coast Guard certifies under 5 U.S.C. 605(b) that this proposed rule would not have a significant economic impact on a substantial number of small entities, as the rule will allow for scheduled bridge openings.

This proposed rule would affect the following entities, some of which may be small entities: The owners or operators of vessels needing to transit the Gulf Intracoastal Waterway in the vicinity of the Pinellas Bayway Structure ''E'' Bridge, persons intending to drive over the bridge, and nearby business owners. The revision to the opening schedule would not have a significant impact on a substantial number of small entities. Vehicle traffic and small business owners in the area may benefit from the improved traffic flow that regularly scheduled openings will offer this area. Although bridge openings would be less frequent, vessel traffic would still be able to transit the Gulf Intracoastal Waterway on the hour and half-hour between 7 a.m. until 9 p.m.

If you think that your business, organization, or governmental jurisdiction qualifies as a small entity and that this rule would have a significant economic impact on it, please submit a comment (see **ADDRESSES**) explaining why you think it qualifies and how and to what degree this rule would economically affect it.

Assistance for Small Entities

Under section 213(a) of the Small Business Regulatory Enforcement

Fairness Act of 1996 (Pub. L. 104–121), we want to assist small entities in understanding this proposed rule so that they can better evaluate its effects on them and participate in the rulemaking. If the rule would affect your small business, organization, or governmental jurisdiction and you have questions concerning its provisions or options for compliance please contact the Seventh Coast Guard District Bridge Branch at the address under **ADDRESSES**. The Coast Guard will not retaliate against small entities that question or complain about this rule or any policy or action of the Coast Guard.

Collection of Information

This proposed rule would call for no new collection of information under the Paperwork Reduction Act of 1995 (44 U.S.C. 3501–3520).

Federalism

A rule has implications for federalism under Executive Order 13132, Federalism, if it has a substantial direct effect on State or local governments and would either preempt State law or impose a substantial direct cost of compliance on them. We have analyzed this proposed rule under that Order and have determined that it does not have implications for federalism.

Unfunded Mandates Reform Act

The Unfunded Mandates Reform Act of 1995 (2 U.S.C. 1531–1538) requires Federal agencies to assess the effects of their discretionary regulatory actions. In particular, the Act addresses actions that may result in the expenditure by a State, local, or tribal government, in the aggregate, or by the private sector of $100,000,000 or more in any one year. Though this proposed rule would not result in such an expenditure, we do discuss the effects of this rule elsewhere in this preamble.

Taking of Private Property

This proposed rule would not affect a taking of private property or otherwise have taking implications under Executive Order 12630, Governmental Actions and Interference with Constitutionally Protected Property Rights.

Civil Justice Reform

This proposed rule meets applicable standards in sections 3(a) and 3(b)(2) of Executive Order 12988, Civil Justice Reform, to minimize litigation, eliminate ambiguity, and reduce burden.

Protection of Children

We have analyzed this proposed rule under Executive Order 13045, Protection of Children from Environmental Health Risks and Safety Risks. This rule is not an economically significant rule and would not create an environmental risk to health or risk to safety that might disproportionately affect children.

Indian Tribal Governments

This proposed rule does not have tribal implications under Executive Order 13175, Consultation and Coordination with Indian Tribal Governments, because it would not have a substantial direct effect on one or more Indian tribes, on the relationship between the Federal Government and Indian tribes, or on the distribution of power and responsibilities between the Federal Government and Indian tribes.

Energy Effects

We have analyzed this proposed rule under Executive Order 13211, Actions Concerning Regulations That Significantly Affect Energy Supply, Distribution, or Use. We have determined that it is not a ''significant energy action'' under that order because it is not a ''significant regulatory action'' under Executive Order 12866 and is not likely to have a significant adverse effect on the supply, distribution, or use of energy. The Administrator of the Office of Information and Regulatory Affairs has not designated it as a significant energy action. Therefore, it does not require a Statement of Energy Effects under Executive Order 13211.

Technical Standards

The National Technology Transfer and Advancement Act (NTTAA) (15 U.S.C. 272 note) directs agencies to use voluntary consensus standards in their regulatory activities unless the agency provides Congress, through the Office of Management and Budget, with an explanation of why using these standards would be inconsistent with applicable law or otherwise impractical. Voluntary consensus standards are technical standards (e.g., specifications of materials, performance, design, or operation; test methods; sampling procedures; and related management systems practices) that are developed or adopted by voluntary consensus standards bodies.

This proposed rule does not use technical standards. Therefore, we did not consider the use of voluntary consensus standards.

Environment

We have analyzed this proposed rule under Commandant Instruction M16475.lD which guides the Coast Guard in complying with the National Environmental Policy Act of 1969 (NEPA)(42 U.S.C. 4321–4370f), and have made a preliminary determination that this action is not likely to have a significant effect on the human environment because it simply promulgates the operating regulations or procedures for drawbridges. We seek any comments or information that may lead to the discovery of a significant environmental impact from this proposed rule.

List of Subjects in 33 CFR Part 117

Bridges.

For the reasons discussed in the preamble, the Coast Guard proposes to amend 33 CFR part 117 as follows:

PART 117—DRAWBRIDGE OPERATION REGULATIONS

1. The authority citation for part 117 continues to read as follows:

Authority: 33 U.S.C. 499; 33 CFR 1.05–1(g); Department of Homeland Security Delegation No. 0170.1.

2. Revise § 117.287(d)(4) to read as follows:

* * * * *

§ 117.287 Gulf Intracoastal Waterway.

(d)(4) Pinellas Bayway Structure ''E'' (SR 679) bridge, mile 113.0 at St. Petersburg Beach. The draw shall open on signal, except that from 9 a.m. to 7 p.m. the draw need open only on the hour and 30 minutes past the hour.

* * * * *

Dated: November 21, 2007.

William Lee,

CAPT, USCG, Acting D7 District Commander.

[FR Doc. E7–23412 Filed 12–3–07; 8:45 am]

BILLING CODE 4910–15–P

ENVIRONMENTAL PROTECTION AGENCY

40 CFR Part 52

[EPA–R07–OAR–2007–1055; FRL–8502–1]

Approval and Promulgation of Implementation Plans; State of Missouri; General Conformity

AGENCY: Environmental Protection Agency (EPA).

ACTION: Proposed rule.

SUMMARY: EPA is proposing to approve a revision to the Missouri State Implementation Plan (SIP) to amend the

General Conformity Rule to include de minimus emission levels for Particulate Matter 2.5 ($PM_{2.5}$). This update ensures consistency with the Federal General Conformity Rule.

DATES: Comments on this proposed action must be received in writing by January 3, 2008.

ADDRESSES: Submit your comments, identified by Docket ID No. EPA–R07–OAR–2007–1055 by one of the following methods:

1. *http://www.regulations.gov*: Follow the on-line instructions for submitting comments.
2. *E-mail: shepard.barbara@epa.gov*.
3. *Mail:* Barbara Shepard, Environmental Protection Agency, Region 7, Air Planning and Development Branch, 901 North 5th Street, Kansas City, Kansas 66101.
4. *Hand Delivery or Courier:* Deliver your comments to Barbara Shepard, Environmental Protection Agency, Region 7, Air Planning and Development Branch, 901 North 5th Street, Kansas City, Kansas 66101. Such deliveries are only accepted during the Regional Office's normal hours of operation. The Regional Office's official hours of business are Monday through Friday, 8 a.m. to 4:30 p.m., excluding legal holidays.

Please see the direct final rule which is located in the Rules section of this **Federal Register** for detailed instructions on how to submit comments.

FOR FURTHER INFORMATION CONTACT: Barbara Shepard at (913) 551–7759, or by e-mail at *shepard.barbara@epa.gov*.

SUPPLEMENTARY INFORMATION: In the final rules section of the **Federal Register**, EPA is approving the state's SIP revision as a direct final rule without prior proposal because the Agency views this as a noncontroversial revision amendment and anticipates no relevant adverse comments to this action. A detailed rationale for the approval is set forth in the direct final rule. If no relevant adverse comments are received in response to this action, no further activity is contemplated in relation to this action. If EPA receives relevant adverse comments, the direct final rule will be withdrawn and all public comments received will be addressed in a subsequent final rule based on this proposed action. EPA will not institute a second comment period on this action. Any parties interested in commenting on this action should do so at this time. Please note that if EPA receives adverse comment on part of this rule and if that part can be severed from the remainder of the rule, EPA may adopt as final those parts of the rule that are not the subject of an adverse comment. For additional information, see the direct final rule which is located in the rules section of this **Federal Register**.

Dated: November 26, 2007.

William Rice,

Acting Regional Administrator, Region 7.

[FR Doc. E7–23483 Filed 12–3–07; 8:45 am]

BILLING CODE 6560–50–P

ENVIRONMENTAL PROTECTION AGENCY

40 CFR Part 52

[EPA–R05–OAR–2007–0717; FRL–8501–6]

Approval and Promulgation of Air Quality Implementation Plans; Wisconsin; Approval of Construction Permit Waiver

AGENCY: Environmental Protection Agency (EPA).

ACTION: Proposed rule.

SUMMARY: EPA is proposing to approve revisions to the Wisconsin State Implementation Plan (SIP) submitted by the Wisconsin Department of Natural Resources (WDNR) on May 1, 2007. The WDNR has submitted for approval into its SIP a revision which allows the State to issue a waiver to a source allowing it to commence construction prior to a construction permit being issued, in certain cases. This provision is only allowed for minor sources which meet specific criteria, and WDNR must follow established procedures to grant a waiver. In addition, the revision also contains changes to Wisconsin's fee provisions to allow a fee to be charged for the waiver. EPA is proposing to approve this revision because it is consistent with Federal regulations governing state permit programs.

DATES: Comments must be received on or before January 3, 2008.

ADDRESSES: Submit your comments, identified by Docket ID No. EPA–R05–OAR–2007–0717, by one of the following methods:

1. *http://www.regulations.gov:* Follow the on-line instructions for submitting comments.
2. *E-mail: blakley.pamela@epa.gov*.
3. *Fax:* (312)886–5824.
4. *Mail:* Pamela Blakley, Chief, Air Permits Section, Air Programs Branch (AR–18J), U.S. Environmental Protection Agency, 77 West Jackson Boulevard, Chicago, Illinois 60604.
5. *Hand Delivery:* Pamela Blakley, Chief, Air Permits Section, Air Programs Branch (AR–18J), U.S. Environmental Protection Agency, 77 West Jackson Boulevard, Chicago, Illinois 60604. Such deliveries are only accepted during the Regional Office normal hours of operation, and special arrangements should be made for deliveries of boxed information. The Regional Office official hours of business are Monday through Friday, 8:30 a.m. to 4:30 p.m. excluding Federal holidays.

Instructions: Direct your comments to Docket ID No. EPA–R05–OAR–2007–0717. EPA's policy is that all comments received will be included in the public docket without change and may be made available online at *http://www.regulations.gov*, including any personal information provided, unless the comment includes information claimed to be Confidential Business Information (CBI) or other information whose disclosure is restricted by statute. Do not submit information that you consider to be CBI or otherwise protected through *http://www.regulations.gov* or e-mail. The *http://www.regulations.gov* Web site is an ''anonymous access'' system, which means EPA will not know your identity or contact information unless you provide it in the body of your comment. If you send an e-mail comment directly to EPA without going through *http://www.regulations.gov*, your e-mail address will be automatically captured and included as part of the comment that is placed in the public docket and made available on the Internet. If you submit an electronic comment, EPA recommends that you include your name and other contact information in the body of your comment and with any disk or CD–ROM you submit. If EPA cannot read your comment due to technical difficulties and cannot contact you for clarification, EPA may not be able to consider your comment. Electronic files should avoid the use of special characters, any form of encryption, and be free of any defects or viruses. For additional instructions on submitting comments, go to Section I of the **SUPPLEMENTARY INFORMATION** section of this document.

Docket: All documents in the docket are listed in the *http://www.regulations.gov index*. Although listed in the index, some information is not publicly available, e.g. CBI or other information whose disclosure is restricted by statute. Certain other material, such as copyrighted material, will be publicly available only in hard copy. Publicly available docket materials are available either electronically in www.regulations.gov or in hard copy at the Environmental Protection Agency, Region 5, Air and Radiation Division, 77 West Jackson Boulevard, Chicago, Illinois 60604. This

facility is open from 8:30 a.m. to 4:30 p.m., Monday through Friday, excluding legal holidays. We recommend that you telephone Susan Siepkowski, Environmental Engineer, at (312) 353–2654 before visiting the Region 5 office.

FOR FURTHER INFORMATION CONTACT: Susan Siepkowski, Environmental Engineer, Air Permits Section, Air Programs Branch (AR–18J), Environmental Protection Agency, Region 5, 77 West Jackson Boulevard, Chicago, Illinois 60604, (312) 353–2654, *siepkowski.susan@epa.gov*.

SUPPLEMENTARY INFORMATION: Throughout this document whenever ''we,'' ''us,'' or ''our'' is used, we mean EPA. This supplementary information section is arranged as follows:

I. What Should I Consider as I Prepare My Comments for EPA?
II. What Has Wisconsin Submitted?
III. Does This Submittal Comply With Federal Regulations?
IV. What Action Is EPA Taking Today?
V. Statutory and Executive Order Reviews.

I. What Should I Consider as I Prepare My Comments for EPA?

When submitting comments, remember to:

1. Identify the rulemaking by docket number and other identifying information (subject heading, **Federal Register** date and page number).
2. Follow directions—The EPA may ask you to respond to specific questions or organize comments by referencing a Code of Federal Regulations (CFR) part or section number.
3. Explain why you agree or disagree; suggest alternatives and substitute language for your requested changes.
4. Describe any assumptions and provide any technical information and/or data that you used.
5. If you estimate potential costs or burdens, explain how you arrived at your estimate in sufficient detail to allow for it to be reproduced.
6. Provide specific examples to illustrate your concerns, and suggest alternatives.
7. Explain your views as clearly as possible, avoiding the use of profanity or personal threats.
8. Make sure to submit your comments by the comment period deadline identified.

II. What Has Wisconsin Submitted?

On May 1, 2007, WDNR submitted a SIP revision request to EPA for approval. The submittal requests that EPA approve the following revisions to WDNR's SIP: to renumber and amend NR 406.03, to amend NR 410.03(intro.) and to create NR 406.03(2) and NR 410.03(l)(bm). These changes would allow WDNR to issue a waiver to a source allowing it to commence construction prior to a construction permit being issued. These revisions also contain changes to Wisconsin's fee provisions to allow a fee to be charged for the waiver.

The WDNR held two public hearings in August 2006 and the comment period for this rule closed on August 18, 2006. The WDNR proposed this rule revision to the Wisconsin Natural Resources Board for adoption, and the Board approved the final rule on March 22, 2007.

Wisconsin Rule NR 406 contains the requirements and procedures for construction permits. The revisions to NR 406.03 require the following conditions to be satisfied before the State may grant a source a waiver: (1) A complete construction permit application has been submitted for the source; (2) the source and the proposed project will result in the source remaining a true minor source (no synthetic minor or netting permits); (3) the waiver requests must demonstrate that undue hardship will result if the waiver is not granted. Undue hardship may result from adverse weather conditions, catastrophic damage of existing equipment, a substantial financial hardship that may preclude the project in its entirety, and other unique conditions; (4) the source is not located or to be located within 10 kilometers of a Class I area.

The rule further states that a waiver does not obligate the WDNR to ultimately approve the project, or relieve the source from compliance with any applicable regulation. Finally, if a waiver is granted and the source proceeds with construction, the rule specifies that it is doing so at its own risk, and the source may not operate until the permit is issued. WDNR may rescind a waiver if the owner or operator does not diligently respond to inquiries on the construction permit application or if WDNR preliminarily determines that the source will not meet the criteria for permit approval.

Additional changes are being made to NR 410, Wisconsin's air permit fee rules, to include fees for waivers. NR 10.03(1)(a)(5), related to the fees for a construction permit revision, is amended to exempt the fee if the requested revision is to make the source eligible for a registration operation permit.

III. Does This Submittal Comply With Federal Regulations?

EPA reviewed Wisconsin's May 1, 2007, SIP revision submittal to determine completeness, in accordance with the completeness criteria set out at 40 CFR part 51, appendix V (1991), as amended by 57 FR 42216 (August 26, 1991). We found the submittal to be complete.

EPA evaluated Wisconsin's waiver rule with respect to the SIP approval criteria established in EPA's June 28, 1989, rulemaking ''Requirements for the Preparation, Adoption, and Submittal of Implementation Plans,'' (EPA's 1989 rulemaking); Approval and Promulgation of Implementation Plans, 54 FR 27274. In addition, EPA has evaluated WDNR's rule with respect to relevant Federal rules and guidance documents, as discussed in more detail below.

Section 165 of the Clean Air Act (Act) sets forth preconstruction requirements for the Prevention of Significant Deterioration (PSD) program. Specifically, ''(a) No major emitting facility on which construction is commenced after the date of the enactment of this part, may be constructed in any area to which this part applies unless (1) a permit has been issued for such proposed facility in accordance with this part setting forth emission limitations for such facility which conform to the requirements of this part.''

However, this requirement only applies to major sources, and no such restriction is specified under the minor New Source Review (NSR) program requirements, which are set forth in 40 CFR 51.160. In addition, EPA has made determinations which further support that construction may begin before a permit is issued for minor sources. For example, EPA's October 10, 1978, memorandum from Edward E. Reich to Thomas W. Devine in Region 1 discusses preconstruction activities allowed at a site with both PSD and non-PSD sources. This memo states that construction may begin on PSD-exempt projects before the permit is issued.

Furthermore, EPA approved a rule for Idaho's permit program which allowed construction to commence prior to a permit being issued. (See 68 FR 2217, final rule.) The August 13, 2002, **Federal Register** proposed approval of Idaho's rule, Section 213, regarding construction prior to final permit issuance, states:

> Section 213, entitled ''Pre-Permit Construction'' allows construction to commence on certain non-major sources and non-major modifications prior to receiving a final permit to construct, provided certain conditions are met. EPA believes that this provision is consistent with the requirements of section 110(a)(2)(C) of the CAA and 40 CFR 51.160, including 40 CFR 51.160(b), which requires States to have legally

enforceable procedures to prevent construction or modification of a source if it would violate any SIP control strategies or interfere with attainment or maintenance of the NAAQS. (See 67 FR 52666).

WDNR's rule revision provides that waivers can only be granted for minor sources, and the rule complies with EPA's minor source NSR rules set forth at 40 CFR 51.160. The minor source NSR rules require a state to have a program: (1) To determine ''whether construction or modification'' of a source will interfere with the SIP or attainment or maintenance of the National Ambient Air Quality Standards (NAAQS); and, (2) that includes procedures to ''prevent the construction or modification'' of the source if it would interfere with the SIP or attainment or maintenance of the NAAQS. WDNR will have enforceable procedures to prevent construction or modification of a source if it would violate any SIP requirement, or interfere with attainment or maintenance of the NAAQS. Additionally, WDNR can rescind a waiver if the source does not meet the criteria in Wis. Statute 285.63(1), which contain the criteria for permit application approval, including that the source will not cause or exacerbate a violation of any NAAQS or ambient air increment, and that the source will meet all applicable emission limitations and other requirements promulgated under the chapter.

Finally, the rule contains the following additional safeguards. First, granting a waiver does not obligate the WDNR to ultimately approve the proposed project, or relieve the source from compliance with any applicable regulation. Second, if a waiver is granted and the source proceeds with construction, the rule specifies that it is doing so at its own risk, and the source may not operate until the permit is issued.

Based on EPA's regulations and guidance, and the reasons set forth above, we believe that WDNR's SIP revision is approvable.

IV. What Action Is EPA Taking Today?

EPA is proposing to approve revisions to Wisconsin SIP rules NR 406 and 410 submitted by the State on May 1, 2007. EPA also is soliciting comment on this proposed approval.

V. Statutory and Executive Order Reviews

Executive Order 12866: Regulatory Planning and Review

Under Executive Order 12866 (58 FR 51735, September 30, 1993), this action is not a ''significant regulatory action'' and therefore is not subject to review by the Office of Management and Budget.

Paperwork Reduction Act

This proposed rule does not impose an information collection burden under the provisions of the Paperwork Reduction Act of 1995 (44 U.S.C. 3501 *et seq.*).

Regulatory Flexibility Act

This proposed action merely proposes to approve state law as meeting Federal requirements and imposes no additional requirements beyond those imposed by state law. Accordingly, the Administrator certifies that this proposed rule will not have a significant economic impact on a substantial number of small entities under the Regulatory Flexibility Act (5 U.S.C. 601 *et seq.*).

Unfunded Mandates Reform Act

Because this rule proposes to approve pre-existing requirements under state law and does not impose any additional enforceable duty beyond that required by state law, it does not contain any unfunded mandate or significantly or uniquely affect small governments, as described in the Unfunded Mandates Reform Act of 1995 (Pub. L. 104–4).

Executive Order 13132: Federalism

This action also does not have Federalism implications because it does not have substantial direct effects on the states, on the relationship between the national government and the states, or on the distribution of power and responsibilities among the various levels of government, as specified in Executive Order 13132 (64 FR 43255, August 10, 1999). This action merely proposes to approve a state rule implementing a Federal standard, and does not alter the relationship or the distribution of power and responsibilities established in the Act.

Executive Order 13175: Consultation and Coordination With Indian Tribal Governments

This proposed rule also does not have tribal implications because it will not have a substantial direct effect on one or more Indian tribes, on the relationship between the Federal Government and Indian tribes, or on the distribution of power and responsibilities between the Federal Government and Indian tribes, as specified by Executive Order 13175 (65 FR 67249, November 9, 2000).

Executive Order 13045: Protection of Children From Environmental Health and Safety Risks

This proposed rule also is not subject to Executive Order 13045 ''Protection of Children from Environmental Health Risks and Safety Risks'' (62 FR 19885, April 23, 1997), because it proposes approval of a state rule implementing a Federal standard.

Executive Order 13211: Actions That Significantly Affect Energy Supply, Distribution, or Use

Because it is not a ''significant regulatory action'' under Executive Order 12866 or a ''significant regulatory action,'' this action is also not subject to Executive Order 13211, ''Actions Concerning Regulations That Significantly Affect Energy Supply, Distribution, or Use'' (66 FR 28355, May 22, 2001).

National Technology Transfer Advancement Act

Section 12(d) of the National Technology Transfer and Advancement Act of 1995 (NTTAA), 15 U.S.C. 272, requires Federal agencies to use technical standards that are developed or adopted by voluntary consensus to carry out policy objectives, so long as such standards are not inconsistent with applicable law or otherwise impractical. In reviewing SIP submissions, EPA's role is to approve state choices, provided that they meet the criteria of the Act. Absent a prior existing requirement for the state to use voluntary consensus standards, EPA has no authority to disapprove a SIP submission for failure to use such standards, and it would thus be inconsistent with applicable law for EPA to use voluntary consensus standards in place of a program submission that otherwise satisfies the provisions of the Act. Therefore, the requirements of section 12(d) of the NTTAA do not apply.

List of Subjects in 40 CFR Part 52

Environmental protection, Air pollution control, Carbon monoxide, Incorporation by reference, Intergovernmental relations, Lead, Nitrogen dioxide, Ozone, Particulate matter, Reporting and recordkeeping requirements, Sulfur oxides, Volatile organic compounds.

Dated: November 23, 2007.

Gary Gulezian,

Acting Regional Administrator, Region 5.

[FR Doc. E7–23482 Filed 12–3–07; 8:45 am]

BILLING CODE 6560–50–P

Notices

Federal Register

Vol. 72, No. 232

Tuesday, December 4, 2007

This section of the FEDERAL REGISTER contains documents other than rules or proposed rules that are applicable to the public. Notices of hearings and investigations, committee meetings, agency decisions and rulings, delegations of authority, filing of petitions and applications and agency statements of organization and functions are examples of documents appearing in this section.

DEPARTMENT OF AGRICULTURE

Submission for OMB Review; Comment Request

November 28, 2007.

The Department of Agriculture has submitted the following information collection requirement(s) to OMB for review and clearance under the Paperwork Reduction Act of 1995, Public Law 104–13. Comments regarding (a) whether the collection of information is necessary for the proper performance of the functions of the agency, including whether the information will have practical utility; (b) the accuracy of the agency's estimate of burden including the validity of the methodology and assumptions used; (c) ways to enhance the quality, utility and clarity of the information to be collected; (d) ways to minimize the burden of the collection of information on those who are to respond, including through the use of appropriate automated, electronic, mechanical, or other technological collection techniques or other forms of information technology should be addressed to: Desk Officer for Agriculture, Office of Information and Regulatory Affairs, Office of Management and Budget (OMB), *OIRA_Submission@OMB.EOP.GOV* or fax (202) 395–5806 and to Departmental Clearance Office, USDA, OCIO, Mail Stop 7602, Washington, DC 20250–7602. Comments regarding these information collections are best assured of having their full effect if received within 30 days of this notification. Copies of the submission(s) may be obtained by calling (202) 720–8958.

An agency may not conduct or sponsor a collection of information unless the collection of information displays a currently valid OMB control number and the agency informs potential persons who are to respond to the collection of information that such persons are not required to respond to the collection of information unless it displays a currently valid OMB control number.

Food and Nutrition Service

Title: Issuance Reconciliation Report.

OMB Control Number: 0584–0080.

Summary of Collection: The Food Stamp Act of 1977 (the Act) at Section 7(d) requires State agencies to report on their Food Stamp Program issuance operations not less than monthly, through a reconciliation process. The Food and Nutrition Service (FNS), administers the Food Stamp Program in cooperation with State and local governments. States are held liable to USDA for any financial losses involved in the issuance of food stamp benefits.

Need and Use of the Information: FNS uses form FNS–46 form, Issuance Reconciliation Report, to ensure that State agencies are responsible for preventing losses or shortages of Federal funds in the issuance of benefits. The FNS–46 report is a program management report which is used on an ongoing basis to document the reconciliation process by which State agencies compare all issuances made during the month to the record for issuance.

Description of Respondents: State, Local, or Tribal Government.

Number of Respondents: 54.

Frequency of Responses: Reporting: Monthly.

Total Burden Hours: 5,184.

Ruth Brown,

Departmental Information Collection Clearance Officer.

[FR Doc. E7–23418 Filed 12–3–07; 8:45 am]

BILLING CODE 3410–30–P

DEPARTMENT OF COMMERCE

Bureau of Economic Analysis

Proposed Data Sharing Activity

AGENCY: Bureau of Economic Analysis, Department of Commerce.

ACTION: Notice and request for public comment.

SUMMARY: The Bureau of Economic Analysis (BEA) proposes to provide to the Bureau of Labor Statistics (BLS) data collected from several surveys that it conducts on U.S. direct investment abroad, foreign direct investment in the United States, and U.S. international services transactions for statistical purposes exclusively. In accordance with the requirement of Section 524(d) of the Confidential Information Protection and Statistical Efficiency Act of 2002 (CIPSEA), we are providing the opportunity for public comment on this data-sharing action.

The data provided to BLS will be used for two purposes:

(1) The BLS International Price Program is researching the feasibility of producing price indexes for imports and exports of services, such as financial services, film and tape rentals, and royalties and license fees. BLS will use data from BEA surveys to develop sample frames of companies that trade these services and to directly collect price information from the selected companies. BLS will also use BEA data as weighting sources for the price indexes. Should it prove feasible to produce price indexes for international services, BEA will share data collected in its direct investment and international services surveys with BLS each time BLS draws a new sample and reweights the indexes. BLS will share sample frame and revenue information that it collects with BEA, which will allow BEA to identify errors or omissions in the data collected on its surveys. This data sharing effort will improve the quality of price indexes for imported and exported services that BEA uses in compiling the National Income and Product Accounts.

(2) The BLS Division of Foreign Labor Statistics will use BEA data collected on employment, compensation, and (as available) hours worked at the foreign affiliates of U.S. multinational companies to estimate their hourly compensation costs for research comparing the levels and trends of hourly compensation costs of foreign affiliates with the average costs for establishments in the same industries and same host countries as the affiliates.

DATES: Written comments must be submitted on or before February 4, 2008.

ADDRESSES: Please direct all written comments on this proposed program to the Director, Bureau of Economic Analysis (BE–1), Washington, DC 20230.

FOR FURTHER INFORMATION CONTACT: Requests for additional information on this proposed program should be directed to Maria Borga, Bureau of Economic Analysis (BE–50), Washington, DC 20230, by phone on

(202) 606–9853, via the Internet at *Maria.Borga@bea.gov*, or by fax on (202) 606–5318.

SUPPLEMENTARY INFORMATION:

Background

CIPSEA (Pub. L. 107–347, Title V) and the International Investment and Trade in Services Survey Act (Pub. L. 94–472, 22 United States Code (U.S.C.) 3101–3108) allow BEA and BLS to share certain business data for exclusively statistical purposes. Section 524(d) of the CIPSEA requires a **Federal Register** notice announcing the intent to share data (allowing 60 days for public comment), since BEA respondents were required by law to report the data. Section 524(d) also requires us to provide information about the terms of the agreement for data sharing. For purposes of this notice, BEA has decided to group these terms by three categories.

The categories are:

- Shared data.
- Statistical purposes for the shared data.
- Data access and confidentiality.

Shared Data

BEA proposes to provide BLS with data from its surveys of U.S. direct investment abroad, foreign direct investment in the United States, and U.S. international services transactions. BLS will use these data for statistical purposes exclusively.

Statistical Purposes for the Shared Data

Data collected in BEA's surveys of direct investment are used to develop estimates of the financing and operations of U.S. parent companies, their foreign affiliates, and U.S. affiliates of foreign companies, and estimates of transactions between parents and affiliates. Data collected in BEA's surveys of U.S. international services transactions are used to develop estimates of services transactions between U.S. persons (in a broad legal sense, including companies) and foreign persons. These estimates are published in the *Survey of Current Business*, BEA's monthly journal; in other BEA publications; and on BEA's Web site at *http://www.bea.gov/*. All data are collected under sections 3101–3108, of Title 22, U.S.C.

The shared data will be used for several exclusively statistical purposes by both agencies, such as the production of price indexes for imported and exported services and the making of international comparisons between the hourly compensation costs at the foreign affiliates of U.S. multinational companies and the average costs for establishments in the same industries and same host countries as the foreign affiliates.

Data Access and Confidentiality

Title 22, U.S.C. 3104 protects the confidentiality of the data to be provided by BEA to BLS. The data may be seen only by persons sworn to uphold the confidentiality of the information. Access to the shared data will be restricted to specifically authorized personnel and will be provided for statistical purposes only. Any results of this research are subject to BEA disclosure protection. All BLS employees with access to these data will become BEA Special Sworn Employees—meaning that they, under penalty of law, must uphold the data's confidentiality.

J. Steven Landefeld,

Director, Bureau of Economic Analysis.

[FR Doc. E7–23506 Filed 12–3–07; 8:45 am]

BILLING CODE 3510–06–P

DEPARTMENT OF COMMERCE

International Trade Administration

[A–533–808]

Stainless Steel Wire Rods from India: Final Results of Antidumping Duty Administrative Review and Notice of Rescission of Antidumping Duty Administrative Review in Part

AGENCY: Import Administration, International Trade Administration, Department of Commerce.

SUMMARY: On September 12, 2007, the Department of Commerce published the preliminary results of an administrative review of the antidumping duty order on stainless steel wire rods from India and a notice of intent to rescind the antidumping duty administrative review in part. The administrative review currently covers one manufacturer/exporter, Mukand Ltd., and the review period is December 1, 2005, through November 30, 2006. We stated our intent to rescind the review with respect to the manufacturer/exporter Sunflag Iron & Steel Co., Ltd., in our preliminary results.We have received no comments from interested parties on our preliminary results. We have made no changes to our calculations for the final results of review and, accordingly, have found that Mukand Ltd. made sales at less than normal value in the U.S. market. The final weighted–average dumping margin for this company is listed below in the section entitled ''Final Results of the Review.'' In addition, we have rescinded the administrative review of sales of stainless steel wire rods made by Sunflag Iron & Steel Co., Ltd.

EFFECTIVE DATE: (December 4, 2007.

FOR FURTHER INFORMATION CONTACT: Edythe Artman, AD/CVD Enforcement, Office 5, Import Administration, International Trade Administration, U.S. Department of Commerce, 14th Street and Constitution Avenue, NW, Washington, DC 20230, telephone: (202) 482–3931.

SUPPLEMENTARY INFORMATION:

Background

On September 12, 2007, the Department of Commerce (the Department) published the preliminary results of the administrative review of the antidumping duty order on stainless steel wire rods from India and a notice of intent to rescind the antidumping duty administrative review in part. See *Stainless Steel Wire Rods from India: Preliminary Results of Antidumping Duty Administrative Review and Notice of Intent to Rescind Antidumping Duty Administrative Review in Part*, 72 FR 52079 (September 12, 2007). We invited interested parties to comment on the preliminary results but received no comments from the parties.

Rescission of Review in Part

In the preliminary results of review, we stated our intent to rescind the administrative review with respect to sales of stainless steel wire rods (wire rods) made by Sunflag Iron & Steel Co., Ltd. (Sunflag), during the period of review because we had initiated a new–shipper review of these sales. See *Stainless Steel Wire Rod from India: Notice of Initiation of Antidumping Duty New–Shipper Review*, 72 FR 13088 (March 20, 2007). We thus preliminarily determined that it was appropriate to rescind the administrative review with respect to Sunflag pursuant to 19 CFR 351.214(j), which permits a rescission when there are multiple reviews of the sales of a company.

We received no comments from interested parties concerning our intent to rescind. Because Sunflag's sales are subject to a new–shipper review, we are rescinding the administrative review with respect to Sunflag pursuant to 19 CFR 351.214(j).

Scope of the Order

The merchandise under review is wire rods, which are hot–rolled or hot–rolled annealed and/or pickled rounds, squares, octagons, hexagons or other shapes, in coils. Wire rods are made of alloy steels containing, by weight, 1.2 percent or less of carbon and 10.5

percent or more of chromium, with or without other elements. These products are only manufactured by hot–rolling and are normally sold in coiled form, and are of solid cross section. The majority of wire rods sold in the United States are round in cross-section shape, annealed, and pickled. The most common size is 5.5 millimeters in diameter.

The wire rods subject to this order are currently classifiable under subheadings 7221.00.0005, 7221.00.0015, 7221.00.0030, 7221.00.0045, and 7221.00.0075 of the Harmonized Tariff Schedule of the United States (HTSUS). Although the HTSUS subheadings are provided for convenience and customs purposes, the written description of the merchandise subject to the order is dispositive of whether the merchandise is covered by the order.

No Changes Since the Preliminary Results

Because the Department received no comments on the preliminary results of review and it finds no other basis for changes in these results, it has made no changes in the final results from the preliminary results of review. Accordingly, we find that Mukand Ltd. (Mukand) made sales at less than normal value in the U.S. market during the period of review.

Final Results of the Review

We determine that the weighted–average dumping margin on Mukand's sales of stainless steel wire rods from India for the period December 1, 2005, through November 30, 2006, is 11.56 percent.

Assessment Rates

The Department will determine, and U.S. Customs and Border Protection (CBP) shall assess, antidumping duties on all appropriate entries. We intend to issue appropriate assessment instructions directly to CBP 15 days after publication of these final results of review. In accordance with 19 CFR 351.212(b)(1), we have calculated a customer/importer–specific, per–unit amount for entries of subject merchandise during the period of review.

The Department clarified its ''automatic assessment'' regulation on May 6, 2003. See *Antidumping and Countervailing Duty Proceedings: Assessment of Antidumping Duties*, 68 FR 23954 (May 6, 2003). This clarification applies to period–of-review entries of subject merchandise produced by Mukand where it did not know that its merchandise was destined for the United States. In such instances, we will instruct CBP to liquidate unreviewed entries at the all–others rate if there is no rate for the intermediate company(ies) involved in the transaction.

Cash–Deposit Requirements

The following deposit requirements will be effective upon publication of this notice of final results of administrative review for all shipments of the subject merchandise entered, or withdrawn from warehouse, for consumption on or after the date of publication, consistent with section 751(a)(1) of the Act: (1) the cash–deposit rate for Mukand will be 11.56 percent; (2) for previously reviewed or investigated companies not listed above, the cash–deposit rate will continue to be the company–specific rate published for the most recent period; (3) if the exporter is not a firm covered in this review, a prior review, or the original less–than-fair–value investigation but the manufacturer is, the cash–deposit rate will be the rate established for the most recent period for the manufacturer of the merchandise; and (4) the cash–deposit rate for all other manufacturers or exporters will continue to be the ''all others'' rate of 48.80 percent, which is the ''all others'' rate established in the less–than-fair–value investigation. See *Final Determination of Sales at Less Than Fair Value: Certain Stainless Steel Wire Rods from India*, 58 FR 54110, (October 20, 1993). These cash–deposit rates shall remain in effect until further notice.

Notification to Importers

This notice also serves as a final reminder to importers of their responsibility under 19 CFR 351.402(f)(2) to file a certificate regarding the reimbursement of antidumping duties prior to liquidation of the relevant entries during this review period. Failure to comply with this requirement could result in the Secretary's presumption that reimbursement of antidumping duties occurred and the subsequent assessment of double antidumping duties.

Notification Regarding Administrative Protective Orders

This notice also serves as a reminder to parties subject to an administrative protective order of their responsibility concerning the disposition of proprietary information disclosed under such an order in accordance with 19 CFR 351.305(a)(3). Timely notification of the return or destruction of administrative–protective-order materials or conversion to judicial protective order is hereby requested. Failure to comply with the regulations and the terms of an administrative protective order is a sanctionable violation.

We are issuing and publishing this notice in accordance with sections 751(a)(1) and 777(i)(1) of the Act.

Dated: November 27, 2007.

David M. Spooner,

Assistant Secretary for Import Administration.

[FR Doc. E7–23491 Filed 12–3–07; 8:45 am]

BILLING CODE 3510–DS–S

DEPARTMENT OF COMMERCE

International Trade Administration

[A–821–802]

Initialed Draft Amendment to the Agreement Suspending the Antidumping Investigation on Uranium From the Russian Federation; Request for Comment

AGENCY: Import Administration, International Trade Administration, Department of Commerce.

SUMMARY: The Department of Commerce (''the Department'') and the Russian Federation's Federal Atomic Energy Agency (''Rosatom'') have initialed a draft amendment to the Agreement Suspending the Antidumping Investigation on Uranium from the Russian Federation (''Suspension Agreement''). The proposed amendment will allow the Russian Federation (''Russia'') to export Russian uranium products to the U.S. market in accordance with the export limits and other terms detailed in the amendment. The Department is now inviting interested parties to comment on the text of the proposed amendment.

DATES: Comments must be submitted within thirty (30) days from the publication of this notice.

FOR FURTHER INFORMATION CONTACT: Sally C. Gannon at (202) 482–0162, Import Administration, International Trade Administration, U.S. Department of Commerce, 14th Street and Constitution Avenue, NW., Washington, DC 20230.

Background

On October 30, 1992, the Department suspended the antidumping duty investigation involving uranium from Russia on the basis of an agreement by its government to restrict the volume of direct or indirect exports to the United States in order to prevent the suppression or undercutting of price levels of U.S. domestic uranium. *See Antidumping; Uranium from*

Kazakhstan, Kyrgyzstan, Russia, Tajikistan, Ukraine, and Uzbekistan; Suspension of Investigations and Amendment of Preliminary Determinations, 57 FR 49220 (October 30, 1992).

The Suspension Agreement was subsequently amended, by agreement of both governments, on March 11, 1994, October 3, 1996, and May 7, 1997. *See, respectively, Amendment to Agreement Suspending the Antidumping Investigation on Uranium from the Russian Federation,* 59 FR 15373 (April 1, 1994); *Amendments to the Agreement Suspending the Antidumping Investigation on Uranium from the Russian Federation,* 61 FR 56665 (November 4, 1996); and *Amendment to Agreement Suspending the Antidumping Investigation on Uranium from the Russian Federation,* 62 FR 37879 (July 15, 1997). On July 31, 1998, the Department notified interested parties of an administrative change with respect to the Suspension Agreement. *See Agreement Suspending the Antidumping Investigation on Uranium from the Russian Federation,* 63 FR 40879 (July 31, 1998).

Initialed Amendment

On November 27, 2007, the Department and Rosatom initialed a new draft amendment to the Suspension Agreement. The proposed amendment allows for exports of Russian uranium products to the U.S. market in accordance with the export limits and other terms detailed in the amendment. The text of the draft amendment follows in Annex 1 to this notice.

The Department invites interested parties to submit comments on the proposed amendment within 30 days of the publication date of this notice. Persons wishing to comment should file a signed original and six copies, by the dates specified above, addressed as follows:

Assistant Secretary David M. Spooner, Import Administration, International Trade Administration, U.S. Department of Commerce, c/o Central Records Unit, Room 1874, Washington, DC 20230, *Attn:* Sally C. Gannon, Bilateral Agreements Unit, Room 4083.

All information provided to the Department will be subject to release under Administrative Protective Order (''APO'') and should be submitted in accordance with 19 CFR 351.103 and 19 CFR 351.105 of the Department's regulations, including the service of copies of comments on interested parties to this proceeding. The APO and public service lists in this proceeding can be found at the following Web site address: *http://ia.ita.doc.gov/apo/apo-svc-lists.html.* The Department will consider all comments received by the close of the comment period.

Dated: November 28, 2007.

David M. Spooner,

Assistant Secretary for Import Administration.

Annex 1

November 20, 2007—Draft (Moscow)

Amendment to the Agreement Suspending the Antidumping Investigation on Uranium From the Russian Federation

Date

The Agreement Suspending the Antidumping Investigation on Uranium from the Russian Federation is amended as set forth below.

The Preamble is amended by deleting the last two paragraphs (which were added to the Agreement in 1994) and adding the following paragraph to the end:

The Department and ROSATOM acknowledge that, for purposes of the Agreement, as amended (the ''Agreement''), the successor in interest to MINATOM is the Federal Atomic Energy Agency (''ROSATOM''). All references to MINATOM in this Agreement shall be understood to indicate ROSATOM. All exports of Russian Uranium Products are executed through the Russian Government-Owned entity Techsnabexport (''TENEX''). All references to TENEX include its successors and its affiliated companies. All references to ''Customs'' shall be understood to indicate United States Customs and Border Protection.

Section II.—Definitions—is amended by deleting definitions (g) ''U.S. producer,'' (h) ''for consumption,'' (i) ''End-user,'' (j) ''Spot Contract,'' and (k) ''Newly-produced,'' and by adding the following definitions:

(l) ''Russian Uranium Products'' means all products described in Section III, Product Coverage, of the Agreement.

(m) ''Low-Enriched Uranium'' (''LEU'') means uranium of which the content of the fissile isotope uranium-235 has been increased through enrichment to more than 0.7 percent, but less than 20 percent, by weight.

(n) ''Initial Core'' means the LEU necessary to start a U.S. nuclear reactor that is entering service for the first time.

(o) ''Effective Date'' means the date on which this amendment is signed by both parties.

(p) ''Year'' or ''Relevant Period'' means ''Calendar Year''.

Section IV.—Export Limits—The following new paragraphs are added at the beginning of this Section. The status of the other provisions of Section IV is set forth in Appendix 1.

A. Beginning on the Effective Date, TENEX may immediately enter into contracts for the sale of Russian Uranium Products in the United States, directly to U.S. utilities or otherwise.

B. Beginning in 2011, Russian Uranium Products in any form may be exported to the United States up to the limits set forth below. These limits are expressed in KgU as LEU, at a product assay of 4.4 and a tails assay of 0.3 percent. The Department and ROSATOM will consult and agree within two months after the Effective Date on how to convert and apply against these export limits Russian Uranium Products, which are other than LEU. Russian Uranium Products exported to the United States will be counted against these export limits, employing the formula in Section II(a), where necessary.

1. The annual export limits are as follows:

2011—16,559
2012—24,839
2013—41,398
2014—485,279
2015—455,142
2016—480,146
2017—490,710
2018—492,731
2019—509,058
2020—514,754

These limits were derived from the reference data in the World Nuclear Association's 2005 ''Global Nuclear Fuel Market Supply and Demand 2005–2030.'' The Department shall adjust these export limits in 2016 and 2019 to match the projected reactor demand for subsequent years in that publication or its successor, and also to increase the total export limit for the remaining years by the net amount by which the export limits for previous years have fallen short of the export limits that would have been derived from the revised demand figures for those years, with any additional export allowances being divided equally between the revised export limits for the remaining years. Russian Uranium Products may be exported to the United States under a contract entered into after the Effective Date and approved by the Department under this Agreement, even if such exports exceed the export limits in effect at the time of delivery.

2. After the Effective Date, Russian Uranium Products may be sold in, and exported to, the United States to fulfill contracts for the supply of Initial Cores without being subject to the export limits in this Agreement.

3. After the Effective Date, LEU in the United States pursuant to the contracts

described in Appendix C to the Agreement, and stored as of the Effective Date at the facilities of U.S. producers (i.e., the EUP stockpile), may be sold in the United States or exported from the United States without being subject to the export limits in this Agreement, provided such sales occur prior to January 1, 2014. Any amount sold after December 31, 2013, shall be charged against the export limit for the year in which it is sold or the first subsequent year in which the export limit has not been reached.

4. After the Effective Date, Russian Uranium Products may be imported for processing and certified for re-export pursuant to Sections IV. G and H, without being subject to the export limits in Section IV.B.1.

C. If, at any time, the Department determines that the available supply of Russian Uranium Products is or will be insufficient to meet U.S. demand, the Department may increase the export limits in this Agreement.

D. Except for any increase added pursuant to Section IV.C, if, in any year, the Department permits any Russian Uranium Products to enter the United States in excess of the export limit for that year, the amount of the excess shall be charged against the export limit for the first subsequent year in which the export limit has not been contractually obligated. If the amount entered in any year falls below the export limit for that year, the amount of the shortfall may be added to the export limit for the subsequent year, up to 10 percent of the export limit for the year in which the shortfall occurs.

E. In negotiating contracts involving the export of Russian Uranium Products to the United States, ROSATOM/TENEX shall charge market rates for conversion.

F. The Russian LEU in reactor fuel rods or assemblies exported to the United States shall be counted against the export limits in this Agreement. ROSATOM/TENEX shall charge market rates for fuel rods and assemblies themselves.

The following sentence is added at the end of the sixth paragraph of Section IV.H., which begins ''For re-export entered under the 36 month limitation* * *'':

The Department of Commerce shall instruct Customs to liquidate such entries as promptly as possible, and in all cases within ten (10) days of receiving confirmation of the re-export shipment out of the United States. If the Department does not issue such instruction to Customs within ten (10) days of receiving confirmation of the re-export shipment out of the United States, on the next business day, the Department shall provide ROSATOM with a written explanation of the exact and specific reason(s) for the delay and a date certain by which the Department shall issue instructions to Customs to liquidate the entries. The Department shall provide notice of re-export of any such uranium to TENEX.

N. Russian Uranium Products sold pursuant to a multi-year contract entered into after the Effective Date and approved by the Department may be delivered in accordance with the provisions of this Amendment regardless of any modification to or reduction in the quantity that may be delivered under the export limits or any modification to or any interruption in the effectiveness of, including termination of, this Agreement.

Section V.—Export License/Certificates—is amended by replacing paragraphs B and C with the paragraphs below and adding new paragraph F as follows:

B. Export licenses shall be issued, and export certificates shall be endorsed by the competent Russian Government authority, for all direct and indirect exports of Russian Uranium Products to the United States. Such export certificates shall remain valid for entry into the United States for 120 days from the Date of Export.

C. Russian Uranium Products may enter the United States if: (1) They were sold pursuant to a contract approved by the Department under this Agreement; (2) are accompanied by (a) a valid export license and certificate and (b) a valid purchase and/or delivery order issued in accordance with the contract approved by the Department under this Agreement showing the specific product and tails assays, as applicable; and (3) do not exceed the export limits in Section IV.

F. Any contract, or amendment thereto, for the sale of Russian Uranium Products for exportation to the United States shall be submitted to the Department for approval, along with the documents listed in Appendix 2 to this Amendment. If the maximum quantities to be exported under a contract, when cumulated with the maximum quantities that may be exported under all other approved contracts, are not in excess of the export limits under this Agreement, and the information listed in Appendix 2 has been submitted to the Department, the Department shall approve the contract within 15 days (or the next business day if the 15th day falls on a weekend or holiday).

Section VII.—Anticircumvention—is amended by replacing Section VII.D with new paragraph D and adding new paragraph J as follows:

D. In addition to the above requirements, the Department shall direct Customs to require all importers of uranium products into the United States, regardless of stated country of origin, to submit at the time of entry written statements certifying the following:

1. The country(ies) in which the ore was mined and, if applicable, converted, enriched, and/or fabricated, for all imports; and

2. That the uranium products being imported were not obtained under any arrangement, swap, exchange, or other transaction designed to circumvent the export limits established by the Agreement, or the limitations set forth in 43 U.S.C. 2297h–10(b) of the USEC Privatization Act, 42 U.S.C. 2297h, *et seq.*, and the *Procedures for Delivery of HEU Natural Uranium Component in the United States*, as revised. *Procedures for Delivery of HEU Natural Uranium Component in the United States*, 64 FR 42930 (August 6, 1999).

J. Neither ROSATOM nor TENEX will circumvent this Agreement or frustrate the attainment of its objectives by entering into any contract involving the exportation to the United States of LEU in quantities exceeding the export limits in this Agreement.

Section VIII.—Monitoring—is amended by adding the reporting requirements listed in Appendix 3 to this Amendment.

Section XII.—Duration—is amended by replacing the first two paragraphs with the following:

As of the Effective Date of this Amendment, each of the petitioners in the suspended investigation, or their legal successors, has filed with the Department an irrevocable letters expressly withdrawing the petition in the antidumping investigation, effective December 31, 2020. These letters are attached to this Amendment as Appendix 4. The Agreement will terminate on December 31, 2020. Upon its termination on December 31, 2020, the Department shall terminate the antidumping investigation effective on that date.

The Department, before the Effective Date, acknowledges the remand of the U.S. Court of International Trade of September 26, 2007, in *Techsnabexport* v. *United States*, Ct. No. O6–00228, including the Court's direction that ''Commerce follow the precedent by which it is bound, articulated in the Eurodif cases.'' As directed by the Court of International Trade, the Department will abide by the Eurodif decisions in its determination of the likelihood of continued or recurring dumping. Therefore, on the Effective Date,

Techsnabexport will file a motion in *Techsnabexport* v. *United States* under Rule 41 of the U.S. Court of International Trade Rules. The United States will not appeal the September 26th decision in *Techsnabexport* v. *United States*.

In addition, the Department shall conduct sunset reviews under 19 U.S.C. 1675(c) in the years 2011 and 2016. All parties agree that the sunset reviews shall be expedited, pursuant to 19 U.S.C. 1675(C)(4) and (C)(3)(B), respectively, at both the Department of Commerce and the International Trade Commission.

Section XIII.—Conditions—is amended by adding, before the first paragraph, an ''A,'' and by adding the following new paragraph at the end of Section XIII:

B. This Agreement will be applied consistent with any applicable decision of the U.S. Courts, including the *Eurodif* decisions. Such decisions shall be applied to this Agreement (including by amendment, if necessary) no later than six (6) months after the appropriate decision, unless the Department and ROSATOM agree otherwise.

Section XIV.—Other Provisions—is amended by replacing existing paragraph B with the following new paragraph B, and by replacing the second part of paragraph C with the following:

B. For all purposes relating to the Agreement, the Department and ROSATOM shall be represented by, and all communications and notices shall be given and addressed to:

Department Contact:

United States Department of Commerce, Assistant Secretary for Import Administration, International Trade Administration, Washington, DC 20230

ROSATOM Contact:

State Secretary, Deputy Director, Federal Atomic Energy Agency (ROSATOM), Staromonetnyy per., 26, 119180, Moscow, Russian Federation

C. If U.S. law, regulation, administrative practice, or policy should change in any manner, including by U.S. court decision or legislative or administrative action, that would result in relatively less favorable treatment for the Russian Federation as compared to any other country, or if the United States should enter into any agreement or understanding or take any action that would cause that result, the parties will promptly, *i.e.*, within six (6) months, enter into consultations with a view to amending this Agreement so as to eliminate such less favorable treatment to the extent permitted by U.S. law.

Signed on this _____ day of _____, 2007.

For ROSATOM:

S.V. Kiriyenko
Director, Federal Atomic Energy Agency (ROSATOM)

For the United States Department of Commerce:

Carlos M. Gutierrez
U.S. Secretary of Commerce

Appendix 1

Section IV.—Export Limits—The status of the other paragraphs of Section IV, other than the newly-added paragraphs, is as follows:

1994 matched sales provisions (IV, IV.A—IV.E)—hereby deleted
1992 Sections IV.A—IV.C.1—deleted in 1994
1992 Sections IV.C 2–3 and IV.D—hereby deleted
1992 Sections IV.E—IV.G—remain in effect
1992 Section IV.H, first two paragraphs—deleted in 1997
1997 Section H—remains in effect
1992 Sections IV.I—IV.M.1 remain in effect
1996 Section IV.M.2—remains in effect
1992 Section IV.M.2—ineffective as of 1997

Appendix 2

Pursuant to Section V.F, the following documents should accompany any contract for the sale of Russian Uranium Products for exportation to the United States, which is submitted to the Department for approval:

1. A copy of the signed contract pursuant to which the Russian Uranium Products shall be imported (showing the contract date and key terms such as price, quantity, delivery requirements and estimated delivery schedule);
2. A description of the physical material being imported;
3. Identification of the Russian supplier of the Russian Uranium Products;
4. For each contract, the maximum volume of each type of Russian Uranium Product that may be exported to the United States pursuant to the contract each year;
5. For sales pursuant to Section IV.B.2, the documentation necessary to demonstrate that deliveries meet the definition of Initial Cores (*e.g.*, a combined construction and operating license (COL), etc.).

Appendix 3

Pursuant to Section VIII, the following additional reporting requirements are agreed to by ROSATOM and the Department:

1. Beginning the Effective Date, no later than 30 days after the end of each calendar quarter, to the extent permitted by Russian law, ROSATOM shall submit an updated master export schedule to the Department showing the following for each year (from the first year of validity of the Amendment through 2020) for any material to be delivered in the United States pursuant to contracts under this Agreement: (a) Estimated deliveries, and (b) completed deliveries. All such reports submitted by ROSATOM shall be subject to release under Administrative Protective Order (''APO'') to counsel for interested parties to the proceeding.

2. Beginning the Effective Date, no later than 30 days after the end of each semi-annual period, to the extent permitted by U.S. law, the Department shall provide semi-annual reports to ROSATOM, via its U.S. attorney under APO, of all individual imports (for consumption and for processing and re-export) of Russian Uranium Products to the United States, together with such additional information as is necessary and appropriate to monitor implementation of the Agreement, as agreed to by the Department and ROSATOM. For every transaction for which the Department withholds information on the basis that its disclosure is not permitted under U.S. law, the Department shall submit to ROSATOM the fullest description permitted under U.S. law of the information withheld and the legal basis for not disclosing it.

3. For purposes of the Department's reporting on imports for consumption, to the extent permitted under U.S. law, the Department shall provide the following:

a. Quantity: Indicate units of measure sold and/or entered, *e.g.*, pounds U308, Kilograms U, SWU, etc.
b. Date of Importation: The date Customs confirmed the Department's shipment clearance instructions.
c. Date of Export: The date the Export Certificate is endorsed.
d. Export Certificate: The Export Certificate number corresponding to each individual import.
e. Total Sales Value: Indicate currency used.
f. Importer of Record: Name and address.

4. For purposes of the Department's reporting on imports for processing and re-export, to the extent permitted under U.S. law, the Department shall provide the following:

a. Filing date of request for approval filed with the Department.
b. Certificate for Re-Export number, as listed on the Certificate for Re-Export.
c. Date of issuance by ROSATOM of the Certificate for Re-Export, as listed on the Certificate for Re-Export.
d. Date of Export, as listed on the Certificate for Re-Export.
e. Party requesting approval, as listed on the request for approval.
f. Customer, as listed on the Certificate for Re-Export.
g. Total quantity, expressed in KgU, U308 and, as applicable, SWUs, as listed on the Certificate for Re-Export.
h. Date of importation, as relied upon by the Department for purposes of determining annual usage of the quota.
i. Timeframe for re-export (i.e., 12-month or 36-month), as listed on the Certificate for Re-Export.
j. Scheduled date for re-export, as relied upon by the Department for purposes of determining annual usage of the quota.
k. Notice of re-export filed with the Department, including the date of such notification and the actual date of re-export.

[FR Doc. E7–23490 Filed 12–3–07; 8:45 am]

BILLING CODE 3510–DS–P

DEPARTMENT OF COMMERCE

International Trade Administration

[C–475–819]

Certain Pasta From Italy: Notice of Extension of Time Limit for the Final Results of the Tenth Countervailing Duty Administrative Review

AGENCY: Import Administration, International Trade Administration, Department of Commerce.

DATES: *Effective Dates:* December 4, 2007.

FOR FURTHER INFORMATION CONTACT: Andrew McAllister or Brandon Farlander, AD/CVD Operations, Office 1, Import Administration, International Trade Administration, U.S. Department of Commerce, 14th Street and Constitution Avenue, NW., Washington DC 20230; telephone: (202) 482–1174 and (202) 482–0182, respectively.

SUPPLEMENTARY INFORMATION:

Background

On August 6, 2007, the Department published the preliminary results of the 2005 administrative review of the countervailing duty order on certain pasta (''pasta'') from Italy. *See Certain Pasta from Italy: Preliminary Results of the Tenth Countervailing Duty Administrative Review,* 72 FR 43616 (August 6, 2007). This review covers three manufacturers/exporters of the subject merchandise to the United States: De Matteis Agroalimetare S.p.A. (''De Matteis''), Atar S.r.L. (''Atar''), and Antonio Pallante S.r.L. (''Pallante''). In the preliminary results, we stated that we would issue our final results for the countervailing duty administrative review no later than 120 days after the date of publication of the preliminary results (*i.e.*, December 4, 2007).

Extension of Time Limit for Final Results

Section 751(a)(3)(A) of the Tariff Act of 1930, as amended (''the Act''), requires the Department to issue the final results in an administrative review within 120 days of the publication date of the preliminary results. However, if it is not practicable to complete the review within this time period, section 751(a)(3)(A) of the Act allows the Department to extend the time limit for the final results to a maximum of 180 days.

The Department has determined that completion of the final results of this review within the original time period is not practicable due to legal and factual issues that have arisen since the issuance of our preliminary results of review. Specifically, the Department requires additional time to review interested parties' comments on De Matteis' November 5, 2007, supplemental questionnaire response. Thus, in accordance with section 751(a)(3)(A) of the Act, the Department is extending the time period for issuing the final results of review by an additional 60 days, until February 4, 2008.

This notice is published pursuant to sections 751(a)(2)(B)(iv) and 777(i)(1) of the Act.

Dated: November 28, 2007.

Stephen J. Claeys,

Deputy Assistant Secretary for Import Administration.

[FR Doc. E7–23488 Filed 12–3–07; 8:45 am]

BILLING CODE 3510–DS–P

DEPARTMENT OF COMMERCE

International Trade Administration

[Application No. 85–13A18]

Export Trade Certificate of Review

ACTION: Notice of Issuance of an Amended Export Trade Certificate of Review to U.S. Shippers Association.

SUMMARY: The U.S. Department of Commerce has issued an amended Export Trade Certificate of Review (''Certificate'') to the U.S. Shippers Association (''USSA'') on November 27, 2007. USSA's application to amend its Certificate was announced in the **Federal Register** on September 14, 2007 (72 FR 52552), and an amended notice of application for amendment was published on October 4, 2007 (72 FR 56727). The original Certificate No. 85–00018 was issued to USSA on June 3, 1986, and announced in the **Federal Register** on June 9, 1986 (51 FR 20873). The previous amendment (No. 85–12A018) was issued to USSA on April 6, 2006, and announced in the **Federal Register** April 12, 2006 (71 FR 18721).

FOR FURTHER INFORMATION CONTACT: Jeffrey Anspacher, Director, Export Trading Company Affairs, International Trade Administration, by telephone at (202) 482–5131 (this is not a toll-free number) or E-mail at *oetca@ita.doc.gov*.

SUPPLEMENTARY INFORMATION: Title III of the Export Trading Company Act of 1982 (15 U.S.C. Sections 4001–21) authorizes the Secretary of Commerce to issue Export Trade Certificates of Review. The regulations implementing Title III are found at 15 CFR part 325 (2006).

Export Trading Company Affairs is issuing this notice pursuant to 15 CFR 325.6(b), which requires the Department of Commerce to publish a summary of the certification in the **Federal Register**. Under section 305(a) of the Act and 15 CFR 325.11(a), any person aggrieved by the Secretary's determination may, within 30 days of the date of this notice, bring an action in any appropriate district court of the United States to set aside the determination on the ground that the determination is erroneous.

Description of Amended Certificate

USSA's Export Trade Certificate of Review has been amended to:

1. Add each of the following companies and persons as a new ''Member'' of the Certificate within the meaning of section 325.2(1) of the Regulations (15 C.F.R. 325.2(1)): Taminco, Inc.; Taminco Higher Amines, Inc.; and Taminco Methylamines, Inc., each located in Allentown, PA, and Salvatore Di Paola and Carrie M. Bowden, both of Missouri City, TX; and

2. Delete Bayer CropScience, located in Research Triangle Park, NC.

The effective date of the amended certificate is September 4, 2007, the date on which USSA's application to amend was deemed submitted. A copy of the amended Certificate will be kept in the International Trade Administration's Freedom of Information Records Inspection Facility, Room 4001, U.S. Department of Commerce, 14th Street and Constitution Avenue, NW., Washington, DC 20230.

Dated: November 28, 2007.

Jeffrey Anspacher,

Director, Export Trading Company Affairs.

[FR Doc. E7–23501 Filed 12–3–07; 8:45 am]

BILLING CODE 3510–DR–P

DEPARTMENT OF COMMERCE

National Institute of Standards and Technology

National Construction Safety Team Advisory Committee Meeting

AGENCY: National Institute of Standards and Technology, United States Department of Commerce.

ACTION: Notice of open meeting.

SUMMARY: The National Construction Safety Team (NCST) Advisory Committee (Committee), National Institute of Standards and Technology (NIST), will meet via teleconference Tuesday, December 18, 2007, from 1 p.m. to 3 p.m. The meeting will be audio webcast so that the public may listen to the meeting as it takes place. The primary purpose of this meeting is for the NCST Advisory Committee to

discuss its annual report to the Congress and for NIST to update the Committee on the status of the investigation of World Trade Center 7. The agenda may change to accommodate Committee business. The final agenda will be posted on the NIST Web site at *http://www.nist.gov/ncst.*

DATES: The meeting will convene on Tuesday, December 18, 2007 at 1 p.m. and will adjourn at 3 p.m. The meeting will be conducted via teleconference. The live audio Web cast will be available to the public via a link on the NIST WTC Web site, *http://wtc.nist.gov.*

ADDRESSES: The meeting will be held via teleconference. A live audio webcast of the meeting will be available via a link on the NIST WTC Web site, *http://wtc.nist.gov.* Please refer to the **SUPPLEMENTARY INFORMATION** section of this notice for additional information.

FOR FURTHER INFORMATION CONTACT: Stephen Cauffman, National Construction Safety Team Advisory Committee, National Institute of Standards and Technology, 100 Bureau Drive, MS 8611, Gaithersburg, Maryland 20899–8611. Mr. Cauffman's e-mail address is *stephen.cauffman@nist.gov* and his phone number is (301) 975–6051.

SUPPLEMENTARY INFORMATION: The Committee was established pursuant to Section 11 of the National Construction Safety Team Act (15 U.S.C. 7310 et seq.). The Committee is composed of six members, appointed by the Director of NIST, who were selected for their technical expertise and experience, established records of distinguished professional service, and their knowledge of issues affecting teams established under the NCST Act. The Committee will advise the Director of NIST on carrying out investigations of building failures conducted under the authorities of the NCST Act that became law in October 2002 and will review the procedures developed to implement the NCST Act and reports issued under section 8 of the NCST Act. Background information on the NCST Act and information on the NCST Advisory Committee is available at *http://www.nist.gov/ncst.*

Pursuant to the Federal Advisory Committee Act, 5 U.S.C. app. 2, notice is hereby given that the National Construction Safety Team (NCST) Advisory Committee (Committee), National Institute of Standards and Technology (NIST), will meet Tuesday, December 18, at 1 p.m. and will adjourn at 3 p.m. The meeting will be conducted by teleconference with a live audio webcast available to the public.

The primary purpose of this meeting is for the NCST Advisory Committee to discuss its annual report to the Congress and for NIST to update the Committee on the status of the investigation of World Trade Center 7. The meeting will be conducted via teleconference with a live audio webcast. The final agenda will be posted on the NIST Web site at *http://www.nist.gov/ncst.*

Individuals and representatives of organizations who would like to offer comments and suggestions related to items on the Committee's agenda for this meeting, are invited to request a place on the agenda. Approximately one-half hour will be reserved for public comments, and speaking times will be assigned on a first-come, first-served basis. The amount of time per speaker will be determined by the number of requests received, but is likely to be 5 minutes each. Questions from the public will not be considered during this period. Speakers who wish to expand upon their oral statements, those who had wished to speak but could not be accommodated on the agenda, and those who were unable to attend in person are invited to submit written statements to the National Construction Safety Team Advisory Committee, National Institute of Standards and Technology, 100 Bureau Drive, MS 8611, Gaithersburg, Maryland 20899–8611, via fax at (301) 975–6122, or electronically by e-mail to *ncstac@nist.gov.*

Since the meeting will be held by teleconference, all those wishing to speak must submit their request by e-mail to the attention of Mr. Stephen Cauffman, *cauffman@nist.gov* by 5 p.m. EST on December 14, 2007. Instructions on how and when to call in for the public comment period will be provided to registered speakers by e-mail on December 17, 2007.

Dated: November 28, 2007.

Richard F. Kayser,

Acting Deputy Director.

[FR Doc. E7–23492 Filed 12–3–07; 8:45 am]

BILLING CODE 3510–13–P

DEPARTMENT OF COMMERCE

National Oceanic and Atmospheric Administration

RIN 0648–XD82

Endangered and Threatened Species; 5-year Review

AGENCY: National Marine Fisheries Service (NMFS), National Oceanic and Atmospheric Administration (NOAA), Commerce.

ACTION: Notice of availability of a 5-year review for Johnson's seagrass.

SUMMARY: We, NMFS, announce the availability of a 5-year review for Johnson's seagrass (*Halophila johnsonii*) as required by the Endangered Species Act of 1973 (ESA). Johnson's seagrass was listed as threatened on September 14, 1998. Based on the best available scientific and commercial data, we conclude in the 5-year review that Johnson's seagrass remains a threatened species likely to become endangered within the foreseeable future. Therefore, based on our 5-year review, we recommend no change in listing.

ADDRESSES: Additional information about the 5-year review may be obtained by writing to Shelley Norton, NMFS, Southeast Regional Office, Protected Resources Division, 263 13th Avenue South, St. Petersburg, FL 33701 or send and electronic message to *Shelley.norton@noaa.gov*. Electronic copies of the 5-year review are available online at the NMFS Southeast Regional Office website: *http://sero.nmfs.noaa.gov/pr/protres.htm.*

SUPPLEMENTARY INFORMATION:

Background

Under the ESA, a list of endangered and threatened wildlife and plant species must be maintained. The list is published at 50 CFR 17.11 (for animals) and 17.12 (for plants). Section 4(c)(2)(A) of the ESA requires that we conduct a review of listed species at least once every 5 years. On the basis of such reviews under section 4(c)(2)(B), we determine whether any species should be removed from the List (delisted), or reclassified from endangered to threatened or from threatened to endangered. In a 5-year review we consider the best scientific and commercial data and all new information that has become available since the listing determination or most recent status review of a species.

NMFS and the NOAA Center for Coastal Fisheries and Habitat Research (CCFHR) initiated the 5-year review of Johnson's Seagrass in September 2006. The CCFHR and NMFS solicited information from the public through the **Federal Register** (71 FR 60108; October 12, 2006), as well as through personal and written communications with several educational institutions, Federal and state governments, and private research organizations. To complete the review, we evaluated all information that has become available on the species since 1997, the date of the last Johnson's seagrass biological status review. The completed 5-year review was peer reviewed. We conclude that the 5-year

review meets the requirements of the ESA.

Authority: 16 U.S.C. 1531 *et seq.*

Dated: November 28, 2007.

Angela Somma,

Chief, Endangered Species Division, Office of Protected Resources, National Marine Fisheries Service.

[FR Doc. E7–23503 Filed 12–3–07; 8:45 am]

BILLING CODE 3510–22–S

DEPARTMENT OF DEFENSE

Office of the Secretary

Autism Services Demonstration Project for TRICARE Beneficiaries Under the Extended Care Health Option Program

AGENCY: Department of Defense.

ACTION: Notice of an autism services demonstration project for TRICARE beneficiaries under the Extended Care Health Option program.

SUMMARY: This notice is to advise interested parties of a Military Health System (MHS) demonstration project entitled Enhanced Access to Autism Services Demonstration Project.

The Department proposes a demonstration program under the Department's demonstration authority under 10 United States Code (U.S.C.) 1092 to expand the availability of Intensive Behavioral Intervention (IBI) services (defined as an intensive application of certain behavior modification interventions) to Extended Care Health Option (ECHO) program beneficiaries with autism. The demonstration program will permit TRICARE cost sharing of services by IBI tutors under a modified corporate services model. This demonstration will determine whether military families are able to make more effective use of the special education benefit in the ECHO program. Additionally, the demonstration will help determine the effectiveness of expanding the provider base in improving the access to services for TRICARE and attendant improvement in functional outcome for those military dependent children receiving services.

For purposes of this demonstration, provider qualifications will be established by the Department pending development of national standards by a nationally recognized certifying body for ABA providers, which standards the Department determines appropriate for acceptance in the delivery of quality care under the program. The Department intends to retain the ECHO benefit as currently outlined in 32 Code of Federal Regulations (CFR) 199.5, except for the changes that will be implemented in the demonstration program noted above.

DATES: *Effective Date:* 60 days after publication in the **Federal Register**. This demonstration will remain in effect for two years from the start date of the demonstration.

ADDRESSES: TRICARE Management Activity, Office of the Chief Medical Officer, 5111 Leesburg Pike, Suite 810, Falls Church, VA 22041–3206.

FOR FURTHER INFORMATION CONTACT: Captain Robert DeMartino, Office of the Chief Medical Officer, TRICARE Management Activity, telephone (703) 681–0064.

SUPPLEMENTARY INFORMATION:

A. Background

The Military Health System (MHS) is a $33 billion dollar enterprise, consisting of 76 military hospitals, over 500 military health clinics, and an extensive network of private sector health care partners, which provides medical care for over 9 million beneficiaries and Active Duty Service Members. While an accurate count of the number of military-dependent children with autism is not available, estimates based on prevalence rates in the general population suggest that among the more than 1.2 million children of Active Duty Military personnel, between 7,000–9,000 would carry one of the autism spectrum disorder diagnoses.

Autistic spectrum disorders affect essential human behaviors such as social interaction, the ability to communicate ideas and feelings, imagination, and the establishment of relationships with others. A number of treatments, therapies and interventions have been introduced to ameliorate the negative impact of autism on these areas of concern. Intensive Behavioral Intervention (IBI) services (defined as an intensive application of certain behavior modification interventions) have been shown to reduce or eliminate specific problem behaviors and teach new skills to individuals with autism. Applied behavior analysis (ABA), a systematized educational process of collecting data on a child's behaviors and using a variety of behavioral conditioning techniques to teach and reinforce desired behaviors while extinguishing harmful or undesired behaviors, is one of the best studied IBI interventions. Time-limited, focused ABA methods have been shown to reduce or eliminate specific problem behaviors and teach new skills to individuals with autism.

B. The Extended Care Health Option (ECHO) Program

ECHO replaced the Program for Persons with Disabilities (PFPWD) on September 1, 2005, as authorized by section 701(b) of the National Defense Authorization Act for Fiscal Year 2002, Public Law 107–107, which revised subsections (d), (e), and (f) of section 1079 of Title 10, United States Code, and is implemented under 32 CFR 199.5. Under ECHO, qualifying Active Duty family members may receive benefits not available under the basic program. For example, special education services are specifically excluded from the TRICARE basic program under 10 U.S.C. 1079(a)(9). Qualifying conditions under ECHO include moderate or severe mental retardation, a serious physical disability, or an extraordinary physical or psychological condition. Under 10 U.S.C. 1079(e), ''* * * Extended benefits for eligible dependents * * * may include * * * training, rehabilitation, special education, and assistive devices.'' IBI, as a behavioral intervention that shapes behaviors and teaches skills, is a special education service that can be cost-shared under ECHO. The government cost-share for these extended benefits is limited under 10 U.S.C. 1079(f)(2)(A) to a maximum of $2,500 per month.

While participation in ECHO is voluntary, registration is required, by law, for a TRICARE beneficiary to receive the ECHO benefit. The registration process includes providing the managed care support contractor (MCSC) with evidence that the beneficiary is enrolled in the Exceptional Family Member Program provided by the sponsor's branch of Service.

C. The ECHO Program and Providers of ABA

An authorized outpatient provider under the ECHO program must, under 32 CFR 199.6(e), be a provider otherwise authorized under the TRICARE basic program. Alternatively, if not recognized as such, if they provide services that are only authorized under the TRICARE ECHO program, such as special education services, the provider must meet all the applicable licensing and other regulatory requirements in that state, county, municipality or other governmental jurisdiction in which the ECHO service is rendered. In the absence of such licensing or regulatory requirements, the Director, TRICARE Management Activity, or designee determines the applicable requirements necessary to be an authorized provider.

At the present time, no state is known to license or have explicit regulatory oversight over providers of ABA services.

As a health plan, TRICARE is obligated to take reasonable steps to assure the safety, efficacy, and quality of care it provides. One of the most common ways that health plans can assure high quality care is to require that the providers they reimburse meet widely recognized and accepted minimum standards for knowledge, training and experience. The only available nationally recognized credential for IBI services is for ABA providers through the Behavior Analyst Certification Board (BACB) which certifies providers at the bachelor's degree level (Board Certified Associate Behavior Analyst—BCABA) and at the master's degree level (Board Certified Behavior Analyst—BCBA).

Absent state licensing or regulation of ABA providers, the Director, TRICARE Management Activity, established a requirement that ABA providers be certified by the BACB. It was expected that high demand for ABA services would provide incentive for large numbers of ABA providers to become certified BCBAs and BCABAs. The current TRICARE benefit allows cost sharing of BACB-certified ABA therapists when providing consultation to the beneficiary in the home or at school, designing and maintaining a behavioral treatment plan, providing hands-on IBI services, and training and supervising family members in delivery of IBI. TRICARE currently does not authorize the reimbursement of the ''hands-on'' provider of IBI services unless the provider is an authorized TRICARE provider as described above.

Though the number of BCBAs and BCABAs continues to increase, it is widely recognized that there is a relative paucity of board certified analysts. As a result, it is difficult in most areas, especially rural areas, for beneficiaries to find TRICARE authorized ABA providers.

The impact of the scarcity of certified providers is ameliorated by the commonly practiced business model in which a supervising or lead therapist develops the behavioral treatment plan for a child and then provides indirect supervision of the hands-on ABA tutors (also referred to as technicians or instructors) who engage in the one-on-one treatment with the child. In the best scenario, several tutors then provide each client with the recommended intensity of behavioral services (in the range of 8–40 hours a week). Unfortunately, such a provider type is not currently regulated by the states or within the industry, nor is this provider type officially recognized by the BACB. In addition, there is no state or industry oversight of IBI or ABA business entities, no standardized education or training of tutors, and no verification of basic protections such as criminal background checks as a condition of employment. Therefore, none of the criteria exist for tutors that were applied by the Director, TRICARE Management Activity, when authorizing BCABAs and BCBAs as individual providers under the ECHO program.

D. Congressional Directives to the Department of Defense on Autism Services

The John Warner National Defense Authorization Act for Fiscal Year 2007, section 717, required the Department to develop a plan to provide services to military-dependent children with autism within the authority of the ECHO program. Part of the plan was to develop a demonstration project to expand the availability of IBI services. This demonstration implements the plan outlined in the July 2007 report to Congress that met the section 717 requirement.

E. Description of Demonstration Project

The proposed demonstration project will modify the corporate services provider requirements of 32 CFR 199.6(f) as they apply to hands-on IBI tutors who engage in the one-on-one treatment with the child, while employed and supervised by an authorized IBI supervisor (requirements for TRICARE authorized IBI Tutors and IBI Supervisors will be detailed prior to the start of the demonstration project in the TRICARE Operations Manual, available at (*http://manuals.tricare.osd.mil*). Under 32 CFR 199.6(e)(2)(ii)(B), an ECHO outpatient care provider includes an individual, corporation, foundation, or public entity that predominantly renders services of a type uniquely allowable as an ECHO benefit. The TRICARE corporate service provider class under 32 CFR 199.6(f) is established to accommodate individuals who would meet the criteria for status as a TRICARE authorized individual professional provider as established by paragraph (c) of section 199.6, but for the fact that they are employed directly or contractually by a corporation or foundation that provides principally professional services which are within the scope of the TRICARE basic program benefit.

Currently, TRICARE authorizes IBI services only by ABA trained outpatient care providers who are generally individual practitioners, and many practices are not incorporated. As a result, they do not meet most of the requirements under 32 CFR 199.6(f) to qualify as a corporate service provider. This demonstration project will expand who is eligible to provide IBI supervisory services and require IBI Supervisors to meet the following criteria to qualify as a ''corporate service'' provider under this demonstration, and receive reimbursement for services provided by tutors implementing their treatment plan.

(1) IBI Tutors must be individuals who are employed directly or contractually by a TRICARE authorized IBI Supervisor.

(2) Payment for otherwise allowable services by tutors under this demonstration project may be made to a TRICARE-authorized IBI Supervisor subject to the applicable requirements, exclusions and limitations of this demonstration.

(3) The Director, TRICARE, Management Activity, or designee, may create discrete types within the allowable tutor category of provider established by this demonstration to improve the efficiency of TRICARE management.

(4) The Director, TRICARE Management Activity, or designee, may require, as a condition of authorization, that the IBI Supervisor, or the IBI Tutor established by this demonstration project:

(A) Maintain all applicable business license requirements of state or local jurisdictions.

(B) Cooperate fully with a designated utilization and clinical quality management organization which has a contract with the Department of Defense for the geographic area in which the provider does business;

(C) Render services for which direct or indirect payment is expected to be made by TRICARE only after obtaining TRICARE written authorization.

(5) Otherwise allowable services may be rendered at the authorized supervising IBI provider's place of business, or in the beneficiary's home under such circumstances as the Director, TRICARE Management Activity, or designee, determines to be necessary for the efficient delivery of such services.

(6) The Director, TRICARE Management Activity, or designee, may limit the term of a participation agreement for any category or type of provider established by this demonstration project.

(7) The Director, TRICARE Management Activity, or designee, shall determine whether the appropriate

employment or contractual relationship exists between the IBI Supervisor and IBI Tutor. Such determination is conclusive and may not be appealed.

(8) Conditions of authorization.

An applicant must also meet the following conditions to be eligible for authorization as a TRICARE corporate services provider under this demonstration project:

(A) Meet the qualifications and requirements for IBI Supervisors established by the Director, TRICARE Management Activity or designee; and

(B) Ensure that IBI Tutors meet the requirements for TRICARE authorization specified by The Director, TRICARE Management Activity or designee; and

(C) Comply with all applicable organizational and individual licensing or certification requirements that are extant in the state, county, municipality, or other political jurisdiction in which the provider renders services; and

(D) Has entered into a participation agreement approved by the Director, TRICARE Management Activity, or designee, which complies with the participation agreement requirements established by the Director; and

(E) Pricing and payment methodology: The pricing and payment of procedures rendered by a provider authorized under this demonstration project shall be limited to those methods for pricing and payment allowed by 32 CFR part 199 which the Director, TRICARE Management Activity, or designee, determines contribute to the efficient management of this demonstration project.

(F) Termination of participation agreement. A provider may terminate a participation agreement upon 45 days written notice to the Director, TRICARE Management Activity.

This demonstration will test the advisability and feasibility of permitting TRICARE reimbursement for IBI services delivered by non-professional providers, under a modified corporate services model, in the absence of state or industry oversight. Neither the TRICARE Basic Program nor the ECHO program currently authorizes reimbursement for providers working within this type of unregulated corporate structure. Should the demonstration result in a determination to make a permanent change to the TRICARE benefit to permit reimbursement of services provided by IBI tutors under a corporate services model, such decision would require a change to the Code of Federal Regulations.

In addition to provider qualifications, the demonstration project may outline criteria and requirements for covered services, limitations to the benefit, beneficiary eligibility, data gathering and use requirements and documentation of treatment effectiveness that are specific to services delivered under the demonstration project.

F. Evaluation

An evaluation of the demonstration will be conducted. The evaluation will be designed to use a combination of administrative and survey measures of health care outcomes (clinical, utilization, financial, and humanistic measures) to provide analyses and comment on the effectiveness of the demonstration in meeting its goal of providing increased access to safe, efficacious, and quality behavioral services for military children with autism.

Dated: November 28, 2007.

L.M. Bynum,

Alternate OSD Federal Register Liaison Officer, Department of Defense.

[FR Doc. E7–23477 Filed 12–3–07; 8:45 am]

BILLING CODE 5001–06–P

ELECTION ASSISTANCE COMMISSION

Sunshine Act Notice

AGENCY: United States Election Assistance Commission (EAC).

ACTION: Notice of Public Meeting.

DATE AND TIME: Tuesday, December 11, 2007, 9 a.m.–12 Noon (CST).

PLACE: Omni Hotel Downtown, 700 San Jacinto Boulevard at 8th Street, Austin, TX 78701, Phone number (512) 476–3700.

AGENDA: The Commission will consider the following items: Adoption of the 2006 Election Day Survey Report; an amendment to EAC policy on the voting system reports clearinghouse; whether to transfer National Voter Registration Act (NVRA) regulations originally promulgated by the Federal Election Commission to a new Code of Federal Regulations (CFR) site for EAC; individual State requests to change State-specific instructions to the national voter registration form. The Commission will receive end of year report presentations: From the EAC Testing and Certification; Election Administration Support; and Research Divisions and the EAC Executive Director. The Commission will elect officers and consider other administrative matters.

This meeting will be open to the public.

PERSON TO CONTACT FOR INFORMATION: Bryan Whitener, Telephone: (202) 566–3100.

Thomas R. Wilkey,

Executive Director, U.S. Election Assistance Commission.

[FR Doc. 07–5938 Filed 11–30–07; 1:41 pm]

BILLING CODE 6820–KF–M

ELECTION ASSISTANCE COMMISSION

Sunshine Act Notice

AGENCY: United States Election Assistance Commission (EAC).

ACTION: Notice of Public Meeting Roundtable Discussion.

DATE AND TIME: Tuesday, December 11, 2007, 1–6 p.m. (CST).

PLACE: Omni Hotel Downtown, 700 San Jacinto Boulevard at 8th Street, Austin, TX 78701, Phone number (512) 476–3700.

AGENDA: The Commission will host an academic roundtable discussion regarding the Technical Guidelines Development Committee (TGDC) recommended voluntary voting system guidelines (VVSG). The discussion will be focused upon the following topics: (1) How to develop a risk assessment framework to provide context for evaluating the security implications of using various technologies in voting systems; (2) Whether the recommended TGDC standards create appropriate functional standards that promote innovation; (3) Are existing methodologies sufficient to test voting system software; (4) Merits of the various types of Direct (by the voter) and Indirect (by automation) Independent Verification techniques; (5) How to evaluate innovative systems, for which there are no standards for purposes of certification.

This meeting will be open to the public.

PERSON TO CONTACT FOR INFORMATION: Matthew Masterson, Telephone: (202) 566–3100.

Thomas R. Wilkey,

Executive Director, U.S. Election Assistance Commission.

[FR Doc. 07–5939 Filed 11–30–07; 1:41 pm]

BILLING CODE 6820–KF–M

DEPARTMENT OF ENERGY

Federal Energy Regulatory Commission

[Docket Nos. CP08–21–000]

CenterPoint Energy Gas Transmission Company; Notice of Application

November 27, 2007.

Take notice that on November 13, 2007, CenterPoint Energy Gas Transmission Company (CEGT), 1111 Louisiana Street, Houston, Texas 77002–5231, filed in Docket No. CP08–21–000, an application pursuant to section 7(b) of the Natural Gas Act (NGA), to abandon its Lines ADT–2, ADT–6, ADT–8, ADT–10, and ADT–4, all located in Hemphill County, Texas, by sale to CenterPoint Energy Field Services, Inc. In conjunction with the abandonment, CEGT seeks a determination that the lines are gathering facilities exempt from the Commission's jurisdiction under NGA section 1(b), all as more fully set forth in the application, which is on file with the Commission and open to public inspection. This filing may also be viewed on the Commission's Web site at *http://www.ferc.gov* using the ''eLibrary'' link. Enter the docket number, excluding the last three digits, in the docket number field to access the document. For assistance, call (202) 502–8659 or TTY, (202) 208–3676.

Any questions regarding this application should be directed to Lawrence O. Thomas, Director-Rates & Regulatory at CenterPoint Energy Gas Transmission Co., P.O. Box 21734, Shreveport, Louisiana 71151, or by calling (318) 429–2804.

Pursuant to section 157.9 of the Commission's rules, 18 CFR 157.9, within 90 days of this Notice the Commission staff will either: Complete its environmental assessment (EA) and place it into the Commission's public record (eLibrary) for this proceeding; or issue a Notice of Schedule for Environmental Review. If a Notice of Schedule for Environmental Review is issued, it will indicate, among other milestones, the anticipated date for the Commission staff's issuance of the final environmental impact statement (FEIS) or EA for this proposal. The filing of the EA in the Commission's public record for this proceeding or the issuance of a Notice of Schedule for Environmental Review will serve to notify federal and State agencies of the timing for the completion of all necessary reviews, and the subsequent need to complete all federal authorizations within 90 days of the date of issuance of the Commission staff's FEIS or EA.

There are two ways to become involved in the Commission's review of this project. First, any person wishing to obtain legal status by becoming a party to the proceedings for this project should, on or before the comment date stated below, file with the Federal Energy Regulatory Commission, 888 First Street, NE., Washington, DC 20426, a motion to intervene in accordance with the requirements of the Commission's Rules of Practice and Procedure (18 CFR 385.214 or 385.211) and the Regulations under the NGA (18 CFR 157.10). A person obtaining party status will be placed on the service list maintained by the Secretary of the Commission and will receive copies of all documents filed by the applicant and by all other parties. A party must submit 14 copies of filings made with the Commission and must mail a copy to the applicant and to every other party in the proceeding. Only parties to the proceeding can ask for court review of Commission orders in the proceeding.

However, a person does not have to intervene in order to have comments considered. The second way to participate is by filing with the Secretary of the Commission, as soon as possible, an original and two copies of comments in support of or in opposition to this project. The Commission will consider these comments in determining the appropriate action to be taken, but the filing of a comment alone will not serve to make the filer a party to the proceeding. The Commission's rules require that persons filing comments in opposition to the project provide copies of their protests only to the party or parties directly involved in the protest.

Persons who wish to comment only on the environmental review of this project should submit an original and two copies of their comments to the Secretary of the Commission. Environmental commentors will be placed on the Commission's environmental mailing list, will receive copies of the environmental documents, and will be notified of meetings associated with the Commission's environmental review process. Environmental commentors will not be required to serve copies of filed documents on all other parties. However, the non-party commentors will not receive copies of all documents filed by other parties or issued by the Commission (except for the mailing of environmental documents issued by the Commission) and will not have the right to seek court review of the Commission's final order.

The Commission strongly encourages electronic filings of comments, protests and interventions via the Internet in lieu of paper. See 18 CFR 385.2001(a)(1)(iii) and the instructions on the Commission's Web (*http://www.ferc.gov*) site under the ''e-Filing'' link.

Comment Date: December 18, 2007.

Kimberly D. Bose,

Secretary.

[FR Doc. E7–23449 Filed 12–3–07; 8:45 am]

BILLING CODE 6717–01–P

DEPARTMENT OF ENERGY

Federal Energy Regulatory Commission

[Docket Nos. CP08–28–000]

CenterPoint Energy Gas Transmission Company; Notice of Application

November 27, 2007.

Take notice that on November 15, 2007, CenterPoint Energy Gas Transmission Company (CEGT), 1111 Louisiana Street, Houston, Texas 77002–5231, filed in Docket No. CP08–21–000, an application pursuant to section 7(b) of the Natural Gas Act (NGA), to abandon its Lines ADT–17, AD–107, AD–107–A, AD–107–B, and its Canadian Compressor Station, all located in Pittsburg County, Oklahoma, by sale to CenterPoint Energy Field Services, Inc. In conjunction with the abandonment, CEGT seeks a determination that the facilities are gathering facilities exempt from the Commission's jurisdiction under NGA section 1(b), all as more fully set forth in the application which is on file with the Commission and open to public inspection. This filing may also be viewed on the Commission's Web site at *http://www.ferc.gov* using the ''eLibrary'' link. Enter the docket number, excluding the last three digits, in the docket number field to access the document. For assistance, call (202) 502–8659 or TTY, (202) 208–3676.

Any questions regarding this application should be directed to Lawrence O. Thomas, Director-Rates & Regulatory at CenterPoint Energy Gas Transmission Co., P.O. Box 21734, Shreveport, Louisiana 71151, or by calling (318) 429–2804.

Pursuant to section 157.9 of the Commission's rules, 18 CFR 157.9, within 90 days of this Notice the Commission staff will either: complete its environmental assessment (EA) and place it into the Commission's public record (eLibrary) for this proceeding; or issue a Notice of Schedule for Environmental Review. If a Notice of Schedule for Environmental Review is

issued, it will indicate, among other milestones, the anticipated date for the Commission staff's issuance of the final environmental impact statement (FEIS) or EA for this proposal. The filing of the EA in the Commission's public record for this proceeding or the issuance of a Notice of Schedule for Environmental Review will serve to notify federal and state agencies of the timing for the completion of all necessary reviews, and the subsequent need to complete all federal authorizations within 90 days of the date of issuance of the Commission staff's FEIS or EA.

There are two ways to become involved in the Commission's review of this project. First, any person wishing to obtain legal status by becoming a party to the proceedings for this project should, on or before the comment date stated below, file with the Federal Energy Regulatory Commission, 888 First Street, NE., Washington, DC 20426, a motion to intervene in accordance with the requirements of the Commission's Rules of Practice and Procedure (18 CFR 385.214 or 385.211) and the Regulations under the NGA (18 CFR 157.10). A person obtaining party status will be placed on the service list maintained by the Secretary of the Commission and will receive copies of all documents filed by the applicant and by all other parties. A party must submit 14 copies of filings made with the Commission and must mail a copy to the applicant and to every other party in the proceeding. Only parties to the proceeding can ask for court review of Commission orders in the proceeding.

However, a person does not have to intervene in order to have comments considered. The second way to participate is by filing with the Secretary of the Commission, as soon as possible, an original and two copies of comments in support of or in opposition to this project. The Commission will consider these comments in determining the appropriate action to be taken, but the filing of a comment alone will not serve to make the filer a party to the proceeding. The Commission's rules require that persons filing comments in opposition to the project provide copies of their protests only to the party or parties directly involved in the protest.

Persons who wish to comment only on the environmental review of this project should submit an original and two copies of their comments to the Secretary of the Commission. Environmental commentors will be placed on the Commission's environmental mailing list, will receive copies of the environmental documents, and will be notified of meetings associated with the Commission's environmental review process. Environmental commentors will not be required to serve copies of filed documents on all other parties. However, the non-party commentors will not receive copies of all documents filed by other parties or issued by the Commission (except for the mailing of environmental documents issued by the Commission) and will not have the right to seek court review of the Commission's final order.

The Commission strongly encourages electronic filings of comments, protests and interventions via the Internet in lieu of paper. See 18 CFR 385.2001(a) (1) (iii) and the instructions on the Commission's Web (*http://www.ferc.gov*) site under the ''e-Filing'' link.

Comment Date: December 18, 2007.

Kimberly D. Bose,

Secretary.

[FR Doc. E7–23452 Filed 12–3–07; 8:45 am]

BILLING CODE 6717–01–P

DEPARTMENT OF ENERGY

Federal Energy Regulatory Commission

[Docket No. CP08–26–000]

Columbia Gulf Transmission Company; Notice of Request Under Blanket Authorization

November 23, 2007.

Take notice that on November 13, 2007, Columbia Gulf Transmission Company (Columbia Gulf), 5151 San Felipe, Suite 2500, Houston, Texas 77056, filed in Docket No. CP08–26–000, a prior notice request pursuant to sections 157.205 and 157.210 of the Federal Energy Regulatory Commission's regulations under the Natural Gas Act for authorization to construct, own, and operate new natural gas compression facilities, located in Acadia Parish, Louisiana, all as more fully set forth in the application, which is on file with the Commission and open to public inspection. The filing may also be viewed on the Web at *http://www.ferc.gov* using the ''eLibrary'' link. Enter the docket number excluding the last three digits in the docket number field to access the document. For assistance, contact FERC at *FERCOnlineSupport@ferc.gov* or call toll-free, (886) 208–3676 or TTY, (202) 502–8659.

Columbia Gulf proposes to construct two 1,775 horsepower skid-mounted compressor units, for a total of 3,550 horsepower and approximately 200 feet of 20-inch diameter station piping and appurtenances at its existing Rayne Compressor Station in Acadia Parish, Louisiana. Columbia Gulf proposes to provide an additional 180 MMcf/d of firm delivery capacity into Florida Gas Transmission Company, LLC's (FGT) system from Columbia Gulf's East Lateral system at the existing point of delivery to FGT, by increasing the operating pressure from 840 psig to 1008 psig, which is the authorized Maximum Allowable Operating pressure (the existing capacity will not increase). In addition, Columbia Gulf requests authorization to modify its existing point of delivery to FGT in Lafayette, Louisiana, by constructing an additional tap on its East Lateral Line 400 and a large meter and appurtenances. Columbia Gulf estimates the cost of construction to be $17.5 million.

Any questions regarding the application should be directed to Fredric J. George, Lead Counsel, Columbia Gulf Transmission Company, P.O. Box 1273, Charleston, West Virginia 22030–0146, call (304) 357–2359 or fax (304) 357–3206.

Any person or the Commission's Staff may, within 60 days after the issuance of the instant notice by the Commission, file pursuant to Rule 214 of the Commission's Procedural Rules (18 CFR 385.214) a motion to intervene or notice of intervention and, pursuant to section 157.205 of the Commission's Regulations under the Natural Gas Act (NGA) (18 CFR 157.205) a protest to the request. If no protest is filed within the time allowed therefore, the proposed activity shall be deemed to be authorized effective the day after the time allowed for protest. If a protest is filed and not withdrawn within 30 days after the time allowed for filing a protest, the instant request shall be treated as an application for authorization pursuant to Section 7 of the NGA.

The Commission strongly encourages electronic filings of comments, protests, and interventions via the Internet in lieu of paper. See 18 CFR 385.2001(a)(1)(iii) and the instructions on the Commission's Web site (*http://www.ferc.gov*) under the ''e-Filing'' link.

Kimberly D. Bose,

Secretary.

[FR Doc. E7–23426 Filed 12–3–07; 8:45 am]

BILLING CODE 6717–01–P

DEPARTMENT OF ENERGY

Federal Energy Regulatory Commission

[Docket No. PR08–4–000]

Enogex Inc.; Notice of Petition for Rate Approval

November 27, 2007.

Take notice that on November 15, 2007, Enogex Inc. (Enogex) submitted for filing zonal fuel factors for the East and West Zones on the Enogex System for Fuel Year 2008 pursuant to the terms of Enogex's fuel tracker on file with the Commission and to the terms of the settlement approved in Docket Nos. PR02–10–005, *et al.*

Any person desiring to participate in this rate proceeding must file a motion to intervene or to protest this filing in accordance with Rules 211 and 214 of the Commission's Rules of Practice and Procedure (18 CFR 385.211 and 385.214). Protests will be considered by the Commission in determining the appropriate action to be taken, but will not serve to make protestants parties to the proceeding. Any person wishing to become a party must file a notice of intervention or motion to intervene, as appropriate. Such notices, motions, or protests must be filed on or before the date as indicated below. Anyone filing an intervention or protest must serve a copy of that document on the Applicant. Anyone filing an intervention or protest on or before the intervention or protest date need not serve motions to intervene or protests on persons other than the Applicant.

The Commission encourages electronic submission of protests and interventions in lieu of paper using the ''eFiling'' link at *http://www.ferc.gov.* Persons unable to file electronically should submit an original and 14 copies of the protest or intervention to the Federal Energy Regulatory Commission, 888 First Street, NE., Washington, DC 20426.

This filing is accessible on-line at *http://www.ferc.gov,* using the ''eLibrary'' link and is available for review in the Commission's Public Reference Room in Washington, DC. There is an ''eSubscription'' link on the Web site that enables subscribers to receive e-mail notification when a document is added to a subscribed docket(s). For assistance with any FERC Online service, please e-mail *FERCOnlineSupport@ferc.gov,* or call (866) 208–3676 (toll free). For TTY, call (202) 502–8659.

Comment Date: 5 p.m. Eastern Time on December 11, 2007.

Kimberly D. Bose,

Secretary.

[FR Doc. E7–23447 Filed 12–3–07; 8:45 am]

BILLING CODE 6717–01–P

DEPARTMENT OF ENERGY

Federal Energy Regulatory Commission

[Docket No. CP08–24–000]

Florida Gas Transmission Company, LLC; Notice of Request Under Blanket Authorization

November 27, 2007.

Take notice that on November 13, 2007, Florida Gas Transmission Company, LLC, (FGT), 5444 Westheimer Road, Houston Texas 77056, filed in Docket No. CP08–24–000, a prior notice request pursuant to sections 157.205 and 157.212 of the Federal Energy Regulatory Commission's regulations under the Natural Gas Act for authorization to construct, own, and operate an interconnect with Kinder Morgan Louisiana Pipeline LLC (KMLP), located in Acadia Parish, Louisiana, to receive re-vaporized liquefied natural gas, all as more fully set forth in the application, which is on file with the Commission and open to public inspection. The filing may also be viewed on the Web at *http://www.ferc.gov* using the ''eLibrary'' link. Enter the docket number excluding the last three digits in the docket number field to access the document. For assistance, contact FERC at *FERCOnlineSupport@ferc.gov* or call toll-free, (886) 208–3676 or TYY, (202) 502–8659.

FGT proposes the installation of a 12-inch tap and valve, approximately 50 feet of 16-inch connecting pipe, and electronic flow measurement. FGT estimates the cost of construction to be $226,000. FGT states that all cost associated with such facilities will be reimbursed by KMLP. FGT asserts that FGT will own, maintain, and operate the over-pressure protection equipment that KMLP will install in the KMLP Meter Station.

Any questions regarding the application should be directed to Stephen Veatch, Senior Director of Certificates & Tariffs, Florida Gas Transmission Company, LLC, 5444 Westheimer Road, Houston Texas 77056, call (713) 989–2024, fax (713) 989–1158, or by e-mail *stephen.veatch@SUG.com.*

Any person or the Commission's Staff may, within 60 days after the issuance of the instant notice by the Commission, file pursuant to Rule 214 of the Commission's Procedural Rules (18 CFR 385.214) a motion to intervene or notice of intervention and, pursuant to section 157.205 of the Commission's Regulations under the Natural Gas Act (NGA) (18 CFR 157.205) a protest to the request. If no protest is filed within the time allowed therefore, the proposed activity shall be deemed to be authorized effective the day after the time allowed for protest. If a protest is filed and not withdrawn within 30 days after the time allowed for filing a protest, the instant request shall be treated as an application for authorization pursuant to section 7 of the NGA.

The Commission strongly encourages electronic filings of comments, protests, and interventions via the Internet in lieu of paper. See 18 CFR 385.2001(a) (1) (iii) and the instructions on the Commission's Web site (*http://www.ferc.gov*) under the ''e-Filing'' link.

Kimberly D. Bose,

Secretary.

[FR Doc. E7–23450 Filed 12–3–07; 8:45 am]

BILLING CODE 6717–01–P

DEPARTMENT OF ENERGY

Federal Energy Regulatory Commission

[Docket No. ID–3113–001]

McClendon, Stan; Notice of Filing

November 27, 2007.

Take notice that on November 20, 2007, pursuant to section 305(b) of the Federal Power Act, 16 U.S.C. 825d(b) (2006), part 45 of the Commission's Rules of Practice and Procedure, 18 CFR part 45 (2006), and Order No. 664, *Commission Authorization to Hold Interlocking Positions,* 112 FERC ¶ 61,298 (2005); *order on reh'g,* 114 FERC ¶ 61,142 (2006), Stan McClendon filed an application for authorization to hold interlocking directorate positions.

Any person desiring to intervene or to protest this filing must file in accordance with Rules 211 and 214 of the Commission's Rules of Practice and Procedure (18 CFR 385.211, 385.214). Protests will be considered by the Commission in determining the appropriate action to be taken, but will not serve to make protestants parties to the proceeding. Any person wishing to become a party must file a notice of intervention or motion to intervene, as appropriate. Such notices, motions, or

protests must be filed on or before the comment date. Anyone filing a motion to intervene or protest must serve a copy of that document on the Applicant and all the parties in this proceeding.

The Commission encourages electronic submission of protests and interventions in lieu of paper using the ''eFiling'' link at *http://www.ferc.gov.* Persons unable to file electronically should submit an original and 14 copies of the protest or intervention to the Federal Energy Regulatory Commission, 888 First Street, NE., Washington, DC 20426.

This filing is accessible on-line at *http://www.ferc.gov,* using the ''eLibrary'' link and is available for review in the Commission's Public Reference Room in Washington, DC. There is an ''eSubscription'' link on the Web site that enables subscribers to receive e-mail notification when a document is added to a subscribed docket(s). For assistance with any FERC Online service, please e-mail *FERCOnlineSupport@ferc.gov,* or call (866) 208–3676 (toll free). For TTY, call (202) 502–8659.

Comment Date: 5 p.m. Eastern Time on December 20, 2007.

Kimberly D. Bose,

Secretary.

[FR Doc. E7–23453 Filed 12–3–07; 8:45 am]

BILLING CODE 6717–01–P

DEPARTMENT OF ENERGY

Federal Energy Regulatory Commission

[Docket Nos. ER07–1389–000, ER07–1389–001]

Pypha Energy LLC; Notice of Issuance of Order

November 26, 2007.

Pypha Energy LLC (Pypha) filed an application for market-based rate authority, with an accompanying rate schedule. The proposed market-based rate schedule provides for the sale of energy, capacity and ancillary services at market-based rates. Pypha also requested waivers of various Commission regulations. In particular, Pypha requested that the Commission grant blanket approval under 18 CFR part 34 of all future issuances of securities and assumptions of liability by Pypha.

On November 21, 2007, pursuant to delegated authority, the Director, Division of Tariffs and Market Development-West, granted the requests for blanket approval under Part 34 (Director's Order). The Director's Order also stated that the Commission would publish a separate notice in the **Federal Register** establishing a period of time for the filing of protests. Accordingly, any person desiring to be heard concerning the blanket approvals of issuances of securities or assumptions of liability by Pypha, should file a protest with the Federal Energy Regulatory Commission, 888 First Street, NE., Washington, DC 20426, in accordance with Rules 211 and 214 of the Commission's Rules of Practice and Procedure. 18 CFR 385.211, 385.214 (2004).

Notice is hereby given that the deadline for filing protests is December 21, 2007.

Absent a request to be heard in opposition to such blanket approvals by the deadline above, Pypha is authorized to issue securities and assume obligations or liabilities as a guarantor, indorser, surety, or otherwise in respect of any security of another person; provided that such issuance or assumption is for some lawful object within the corporate purposes of Pypha, compatible with the public interest, and is reasonably necessary or appropriate for such purposes.

The Commission reserves the right to require a further showing that neither public nor private interests will be adversely affected by continued approvals of Pypha's issuance of securities or assumptions of liability.

Copies of the full text of the Director's Order are available from the Commission's Public Reference Room, 888 First Street, NE., Washington, DC 20426. The Order may also be viewed on the Commission's Web site at *http://www.ferc.gov,* using the eLibrary link. Enter the docket number excluding the last three digits in the docket number filed to access the document. Comments, protests, and interventions may be filed electronically via the Internet in lieu of paper. See, 18 CFR 385.2001(a)(1)(iii) and the instructions on the Commission's Web site under the ''e-Filing'' link. The Commission strongly encourages electronic filings.

Kimberly D. Bose,

Secretary.

[FR Doc. E7–23427 Filed 12–3–07; 8:45 am]

BILLING CODE 6717–01–P

DEPARTMENT OF ENERGY

Federal Energy Regulatory Commission

[Docket No. CP06–423–001]

Questar Overthrust Pipeline Company; Notice of Compliance Filing

November 27, 2007.

Take notice that on November 15, 2007, Questar Overthrust Pipeline Company (Overthrust) tendered for filing as part of its FERC Gas Tariff, Second Revised Volume No. 1–A, Second Revised Sheet No. 4 and First Revised Sheet No. 5, with an effective date of December 15, 2007.

Overthrust states that the filing is being made in compliance with the Commission's Order issued on April 19, 2007 in Docket No. CP06–423–000.

Any person desiring to protest this filing must file in accordance with Rule 211 of the Commission's Rules of Practice and Procedure (18 CFR 385.211). Protests to this filing will be considered by the Commission in determining the appropriate action to be taken, but will not serve to make protestants parties to the proceeding. Such protests must be filed on or before the date as indicated below. Anyone filing a protest must serve a copy of that document on all the parties to the proceeding.

The Commission encourages electronic submission of protests in lieu of paper using the ''eFiling'' link at *http://www.ferc.gov.* Persons unable to file electronically should submit an original and 14 copies of the protest to the Federal Energy Regulatory Commission, 888 First Street, NE., Washington, DC 20426.

This filing is accessible on-line at *http://www.ferc.gov,* using the ''eLibrary'' link and is available for review in the Commission's Public Reference Room in Washington, DC. There is an ''eSubscription'' link on the Web site that enables subscribers to receive e-mail notification when a document is added to a subscribed docket(s). For assistance with any FERC Online service, please e-mail *FERCOnlineSupport@ferc.gov,* or call (866) 208–3676 (toll free). For TTY, call (202) 502–8659.

Comment Date: 5 p.m. Eastern Time December 4, 2007.

Kimberly D. Bose,

Secretary.

[FR Doc. E7–23448 Filed 12–3–07; 8:45 am]

BILLING CODE 6717–01–P

DEPARTMENT OF ENERGY

Federal Energy Regulatory Commission

[Docket No. CP06–354–003]

Rockies Express Pipeline LLC; Notice of Compliance Filing

November 27, 2007.

Take notice that on November 14, 2007, Rockies Express Pipeline LLC (Rockies) tendered for filing as part of its FERC Gas Tariff, Second Revised Volume No. 1, the tariff sheets listed on the filing, with an effective date of December 14, 2007.

Rockies states that the filing is being made in compliance with the Commission's orders issued on September 21, 2006 and April 19, 2007.

Any person desiring to protest this filing must file in accordance with Rule 211 of the Commission's Rules of Practice and Procedure (18 CFR 385.211). Protests to this filing will be considered by the Commission in determining the appropriate action to be taken, but will not serve to make protestants parties to the proceeding. Such protests must be filed on or before the date as indicated below. Anyone filing a protest must serve a copy of that document on all the parties to the proceeding.

The Commission encourages electronic submission of protests in lieu of paper using the ''eFiling'' link at *http://www.ferc.gov.* Persons unable to file electronically should submit an original and 14 copies of the protest to the Federal Energy Regulatory Commission, 888 First Street, NE., Washington, DC 20426.

This filing is accessible on-line at *http://www.ferc.gov,* using the ''eLibrary'' link and is available for review in the Commission's Public Reference Room in Washington, DC. There is an ''eSubscription'' link on the Web site that enables subscribers to receive e-mail notification when a document is added to a subscribed docket(s). For assistance with any FERC Online service, please e-mail *FERCOnlineSupport@ferc.gov,* or call (866) 208–3676 (toll free). For TTY, call (202) 502–8659.

Comment Date: 5 p.m. Eastern Time December 4, 2007.

Kimberly D. Bose,

Secretary.

[FR Doc. E7–23455 Filed 12–3–07; 8:45 am]

BILLING CODE 6717–01–P

DEPARTMENT OF ENERGY

Federal Energy Regulatory Commission

[Docket No. CP08–27–000]

Tennessee Gas Pipeline Company; Notice of Application

November 27, 2007.

Take notice that on November 14, 2007, Tennessee Gas Pipeline Company (Tennessee), 1001 Louisiana, Houston, Texas 77002, filed in Docket No. CP08–27–000, an application pursuant to section 7of the Natural Gas Act (NGA) and Part 157 of the Commission's Regulations to construct the Carthage Expansion Project (Project). The Project involves the construction of a new 7,700 horsepower compressor station in DeSota Parish, Louisiana, on Tennessee's Line 700–1; the installation of a 10,310 horsepower gas turbine unit to upgrade and replace compression at Tennessee's existing Compressor Station 47 on its Line 100 in Ouachita Parish, Louisiana; and the construction of 1.1 miles of twelve-inch pipe and meter facilities also in Ouachita Parish, Louisiana, all as more fully set forth in the application which is on file with the Commission and open to public inspection. This filing is accessible on-line at *http://www.ferc.gov*, using the ''eLibrary'' link and is available for review in the Commission's Public Reference Room in Washington, DC. There is an ''eSubscription'' link on the Web site that enables subscribers to receive e-mail notification when a document is added to a subscribed docket(s). For assistance with any FERC Online service, please e-mail *FERCOnlineSupport@ferc.gov*, or call (866) 208–3676 (toll free). For TTY, call (202) 420–5589.

Specifically, Tennessee seeks authority to increase capacity on its Line 700–1 from Carthage, Panola County, Texas, to Natchitoches, Natchitoches Parish, Louisiana, and to increase capacity and establish an interconnect on its Line 100 in Ouachita Parish, Louisiana, with Entergy Louisiana, LLC (Entergy) at Entergy's Perryville Generation Station (Power Plant). The Project will allow Tennessee to provide 100,000 Dth/d of firm transportation service for the Power Plant. Incidental to the Project, Tennessee will utilize this expansion as an opportunity to replace three older 1,100 horsepower compressor units at its Compressor Station 47 in Ouachita Parish, Louisiana, which Tennessee states were installed in 1948 under FPC Docket No. G-808 (6 FPC 122 (1947). The estimated total cost of the Project is approximately $38.5 million—$26.9 million for the expansion component and $11.6 million for the replacement component.

Any questions regarding this application should be directed to Jay v. Allen, Senior Counsel, 1001 Louisiana, Houston, Texas 77002, at (713) 627–5415.

Pursuant to section 157.9 of the Commission's rules, 18 CFR 157.9, within 90 days of this Notice the Commission staff will either: complete its environmental assessment (EA) and place it into the Commission's public record (eLibrary) for this proceeding; or issue a Notice of Schedule for Environmental Review. If a Notice of Schedule for Environmental Review is issued, it will indicate, among other milestones, the anticipated date for the Commission staff's issuance of the final environmental impact statement (FEIS) or EA for this proposal. The filing of the EA in the Commission's public record for this proceeding or the issuance of a Notice of Schedule for Environmental Review will serve to notify federal and state agencies of the timing for the completion of all necessary reviews, and the subsequent need to complete all federal authorizations within 90 days of the date of issuance of the Commission staff's FEIS or EA.

There are two ways to become involved in the Commission's review of this project. First, any person wishing to obtain legal status by becoming a party to the proceedings for this project should, on or before the comment date stated below, file with the Federal Energy Regulatory Commission, 888 First Street, NE., Washington, DC 20426, a motion to intervene in accordance with the requirements of the Commission's Rules of Practice and Procedure (18 CFR 385.214 or 385.211) and the Regulations under the NGA (18 CFR 157.10). A person obtaining party status will be placed on the service list maintained by the Secretary of the Commission and will receive copies of all documents filed by the applicant and by all other parties. A party must submit 14 copies of filings made with the Commission and must mail a copy to the applicant and to every other party in the proceeding. Only parties to the proceeding can ask for court review of Commission orders in the proceeding.

However, a person does not have to intervene in order to have comments considered. The second way to participate is by filing with the Secretary of the Commission, as soon as possible, an original and two copies of comments in support of or in opposition to this project. The Commission will consider these comments in

determining the appropriate action to be taken, but the filing of a comment alone will not serve to make the filer a party to the proceeding. The Commission's rules require that persons filing comments in opposition to the project provide copies of their protests only to the party or parties directly involved in the protest.

Persons who wish to comment only on the environmental review of this project should submit an original and two copies of their comments to the Secretary of the Commission. Environmental commentors will be placed on the Commission's environmental mailing list, will receive copies of the environmental documents, and will be notified of meetings associated with the Commission's environmental review process. Environmental commentors will not be required to serve copies of filed documents on all other parties. However, the non-party commentors will not receive copies of all documents filed by other parties or issued by the Commission (except for the mailing of environmental documents issued by the Commission) and will not have the right to seek court review of the Commission's final order.

Comments, protests and interventions may be filed electronically via the Internet in lieu of paper. See 18 CFR 385.2001(a) (1) (iii) and the instructions on the Commission's Web site under the ''e-Filing'' link at *http://www.ferc.gov.* The Commission strongly encourages intervenors to file electronically. Persons unable to file electronically should submit an original and 14 copies of the protest or intervention to the Federal Energy Regulatory Commission, 888 First Street, NE., Washington, DC 20426.

Comment Date: December 18, 2007.

Kimberly D. Bose,

Secretary.

[FR Doc. E7–23451 Filed 12–3–07; 8:45 am]

BILLING CODE 6717–01–P

DEPARTMENT OF ENERGY

Federal Energy Regulatory Commission

[Docket No. CP07–208–000]

Rockies Express Pipeline, LLC; Notice of Availability of the Draft Environmental Impact Statement for the Proposed REX East Project

November 23, 2007.

The staff of the Federal Energy Regulatory Commission (FERC or Commission) has prepared this draft Environmental Impact Statement (EIS) for the construction and operation of the natural gas pipeline facilities proposed by Rockies Express Pipeline LLC (Rockies Express) in the above-referenced docket. The Project facilities would be located in Wyoming, Nebraska, Missouri, Illinois, Indiana, and Ohio.

This draft EIS was prepared to satisfy the requirements of the National Environmental Policy Act (NEPA). The U.S. Army Corps of Engineers, U.S. Fish and Wildlife Service, Natural Resources Conservation Service, and Illinois Department of Agriculture are cooperating agencies for the development of the EIS. A cooperating agency has jurisdiction by law or special expertise with respect to potential environmental impacts associated with the proposal and is involved in the NEPA analysis.

The FERC staff concludes that if the Project is constructed and operated in accordance with applicable laws and regulations, and the project sponsor's proposed mitigation, and the staff's additional mitigation recommendations, it would have mostly limited adverse environmental impacts and would be an environmentally acceptable action.

As currently proposed, the Rockies Express (REX) East Project would consist of the construction and operation of approximately 639.1 miles of natural gas pipeline and a total of 225,716 horsepower (hp) of new compression. The REX East Project would be part of the Rockies Express Pipeline System—a 1,679-mile natural gas pipeline system that would extend from Colorado to Ohio. The Project pipeline would deliver up to 1.8 billion cubic feet per day of gas to other interstate natural gas pipelines. The Project would provide access to an additional 16 inter- and intra-state natural gas pipelines at 20 interconnect points. Specifically, the draft EIS addresses the potential environmental effects of the construction and operation of the following natural gas pipeline facilities proposed by Rockies Express:

- 639.1 miles of 42-inch-diameter natural gas pipeline in Missouri, Illinois, Indiana, and Ohio;
- Seven new compressor stations (Mexico Compressor Station in Audrain County, Missouri; Blue Mound Compressor Station in Christian County, Illinois; Bainbridge Compressor Station in Putnam County, Indiana; Hamilton Compressor Station in Butler County, Ohio; Chandlersville Compressor Station in Muskingum County, Ohio; Arlington Compressor Station in Carbon County, Wyoming; and Bertrand Compressor Station in Phelps County, Nebraska; and
- 20 meter stations and associated interconnecting pipeline facilities at 13 locations along the proposed pipeline route and 42 mainline valves.

Comment Procedures and Public Meetings

Any person wishing to comment on the draft EIS may do so. To ensure consideration prior to a Commission decision on the proposal, it is important that the Commission receive your comments before the date specified below. Please carefully follow these instructions to ensure that your comments are received and properly recorded:

- Send an original and two copies of your comments to: Kimberly D. Bose, Secretary, Federal Energy Regulatory Commission, 888 First Street, NE., Room 1A, Washington, DC 20426.
- Reference Docket No. CP07–208–000.
- Label one copy of the comments for the attention of Gas Branch 2.
- Mail your comments so that they will be received in Washington, DC on or before January 14, 2008.

The Commission strongly encourages electronic filing of any comments, interventions or protests to this proceeding. See 18 Code of **Federal Register** (CFR) 385.2001(a)(1)(iii) and the instructions on the Commission's Internet Web site (*http://www.ferc.gov*) under the ''e-Filing'' link and the link to the User's Guide. Before you can submit comments, you will need to create a free account, by clicking on ''Sign-up'' under ''New User.'' You will be asked to select the type of submission you are making. This type of submission is considered a ''Comment on Filing.'' Comments submitted electronically must be submitted by January 14, 2008.

In lieu of sending written comments, you are invited to attend public comment meetings the FERC has scheduled as follows:

January 7, 2008 6 p.m. to 10 p.m.
- Lanphier High School, 1300 N 11th Street, Springfield, IL 62702, (217) 525–3080
- Clark's Hall Reception Area, 2155 E U.S. Highway 36, Rockville, IN 47872, (765) 569–5794
- Zanesville High School, 1701 Blue Avenue, Zanesville, OH 43701, (740) 588–4203

January 8, 2008 6 p.m. to 10 p.m.
- Pittsfield High School, 201 E Higbee Street, Pittsfield, IL 62363, (217) 285–6888
- Greensburg Jr. High School, 505 E Central Ave, Greensburg, IN 47240, (812) 663–7523

Teays Valley High School, 3887 St. Route 752, Ashville, OH 43103, (740) 983–3131

January 9, 2008 6 p.m. to 10 p.m.

Presser Hall, 900 South Jefferson Street, Mexico, MO, (573) 581–5592

Greenwood Community High School, 615 W Smith Valley Road, Greenwood, IN 46142, (317) 889–4000

Edgwood High School, 5005 Oxford State Rd, Trenton, OH 45067, (513) 867–7425

Interested groups and individuals are encouraged to attend and present oral comments on the draft EIS. Transcripts of the meetings will be prepared.

After the comments are reviewed, any significant new issues are investigated, and modifications are made to the draft EIS, a final EIS will be published and distributed by the FERC staff. The final EIS will contain the staff's responses to timely comments received on the draft EIS.

Comments will be considered by the Commission and cooperating agencies but will not serve to make the commentor a party to the proceeding. Any person seeking to become a party to the proceeding must file a motion to intervene pursuant to Rule 214 of the Commission's Rules of Practice and Procedures (18 CFR 385.214). Anyone may intervene in this proceeding based on this draft EIS. Only intervenors have the right to seek rehearing of the Commission's decision. You must file your request to intervene as specified above.[1] You do not need intervenor status to have your comments considered.

The draft EIS has been placed in the public files of the FERC and is available for distribution and public inspection at:

Federal Energy Regulatory Commission, Public Reference Room, 888 First Street, NE., Room 2A, Washington, DC 20426, (202) 502–8371.

A limited number of hardcopies and CD-ROMs of the draft EIS are available from the FERC's Public Reference Room, identified above. This draft EIS is also available for public viewing on the FERC's Internet Web site at *http://www.ferc.gov.* CD-ROM copies of the draft EIS have been mailed to Federal, State, and local agencies; public interest groups; individuals and affected landowners who requested a copy of the draft EIS or provided comments during scoping; libraries and newspapers in the Project area; and parties to this proceeding. Hard copy versions of the draft EIS were mailed to those specifically requesting them.

Additional information about the project is available from the Commission's Office of External Affairs, at 1–866–208–FERC or on the FERC Internet Web site (*http://www.ferc.gov*) using the eLibrary link. Click on the eLibrary link, click on ''General Search'' and enter the docket number excluding the last three digits in the Docket Number (e.g. CP07–208). Be sure you have selected an appropriate date range. For assistance, please contact FERC Online Support at *FERCOnlineSupport@ferc.gov* or toll free at 1–866–208–3676, or for TTY, contact (202) 502–8659. The eLibrary link on the FERC Internet Web site also provides access to the texts of formal documents issued by the Commission, such as orders, notices, and rulemakings.

In addition, the Commission now offers a free service called eSubscription which allows you to keep track of all formal issuances and submittals in specific dockets. This can reduce the amount of time you spend researching proceedings by automatically providing you with notification of these filings, document summaries, and direct links to the documents. Go to the eSubscription link on the FERC Internet Web site.

Kimberly D. Bose,

Secretary.

[FR Doc. E7–23445 Filed 12–3–07; 8:45 am]

BILLING CODE 6717–01–P

[1] Interventions may also be filed electronically via the Internet in lieu of paper. See the previous discussion on filing comments electronically.

DEPARTMENT OF ENERGY

Federal Energy Regulatory Commission

[Project No. 2210–157]

Appalachian Power Company; Notice of Application for Non-Project Use of Project Lands and Soliciting Comments, Motions To Intervene, and Protests

November 26, 2007.

Take notice that the following hydroelectric application has been filed with the Commission and is available for public inspection:

a. *Application Type:* Non-Project Use of Project Lands and Waters.

b. *Project No:* 2210–157.

c. *Date Filed:* November 7, 2007.

d. *Applicant:* Appalachian Power Company.

e. *Name of Project:* Smith Mountain Pumped Storage Project.

f. *Location:* The project is located on the Roanoke River, in Bedford, Pittsylvania, Franklin, and Roanoke Counties, Virginia.

g. *Filed Pursuant to:* Federal Power Act, 16 U.S.C. 791(a)–825(r).

h. *Applicant Contact:* Elizabeth B. Parcell, Environmental Coordinator I, Appalachian Power Company, P.O. Box 2021, Roanoke, Virginia 24022–2121 (703) 985–2348.

i. *FERC Contact:* Any questions on this notice should be addressed to Jade Alvey, Telephone (202) 502–6849, and e-mail: *Jade.Alvey@ferc.gov.*

j. *Deadline for filing comments, motions to intervene, and protest:* December 26, 2007.

All documents (original and eight copies) should be filed with: Kimberly D. Bose, Secretary, Federal Energy Regulatory Commission, 888 First Street, NE., Washington, DC 20426.

The Commission's Rules of Practice and Procedure require all intervenors filing documents with the Commission to serve a copy of that document on each person whose name appears on the official service list for the project. Further, if an intervenor files comments or documents with the Commission relating to the merits of an issue that may affect the responsibilities of a particular resource agency, they must also serve a copy of the document on that resource agency. A copy of any motion to intervene must also be served upon each representative of the Applicant specified in the particular application.

k. *Description of Request:* Appalachian Power Company (APC) is seeking Commission approval to grant permission to Grant Sutherland to construct a single dock with 2 boat slips adjacent to shoreline identified as an Impact Mitigation Zone (IMZ), as defined in the project's shoreline management plan (SMP). The proposed dock would serve a single-family home to be constructed on Christmas Tree Island, located on the Blackwater River near its confluence with the Roanoke River on Smith Mountain Lake. The licensee is requesting a variance as required by the SMP for development within the IMZ. In accordance with the SMP, Grant Sutherland has developed a plan to construct a single dock, the length of which would not exceed a water depth of 8 feet, and would retain all vegetation within the project boundary.

l. *Locations of the Application:* A copy of the application is available for inspection and reproduction at the Commission's Public Reference Room, located at 888 First Street, NE., Room 2A, Washington, DC 20426, or by calling (202) 502–8371. This filing may also be viewed on the Commission's Web site at

http://www.ferc.gov using the ''eLibrary'' link. Enter the docket number excluding the last three digits in the docket number field to access the document. You may also register online at *http://www.ferc.gov/docs-filing/esubscription.asp* to be notified via e-mail of new filings and issuances related to this or other pending projects. For assistance, call 1–866–208–3676 or e-mail *FERCOnlineSupport@ferc.gov,* for TTY, call (202) 502–8659. A copy is also available for inspection and reproduction at the address in item (h) above.

m. Individuals desiring to be included on the Commission's mailing list should so indicate by writing to the Secretary of the Commission.

n. *Comments, Protests, or Motions To Intervene:* Anyone may submit comments, a protest, or a motion to intervene in accordance with the requirements of Rules of Practice and Procedure, 18 CFR 385.210, .211, .214. In determining the appropriate action to take, the Commission will consider all protests or other comments filed, but only those who file a motion to intervene in accordance with the Commission's Rules may become a party to the proceeding. Any comments, protests, or motions to intervene must be received on or before the specified comment date for the particular application.

o. Any filings must bear in all capital letters the title ''COMMENTS'', ''PROTEST'', or ''MOTION TO INTERVENE'', as applicable, and the Project Number of the particular application to which the filing refers.

p. *Agency Comments:* Federal, State, and local agencies are invited to file comments on the described application. A copy of the application may be obtained by agencies directly from the Applicant. If an agency does not file comments within the time specified for filing comments, it will be presumed to have no comments. One copy of an agency's comments must also be sent to the Applicant's representatives.

q. Comments, protests and interventions may be filed electronically via the Internet in lieu of paper. See, 18 CFR 385.2001(a)(1)(iii) and the instructions on the Commission's Web site at *http://www.ferc.gov* under the ''e-Filing'' link.

Kimberly D. Bose,

Secretary.

[FR Doc. E7–23425 Filed 12–3–07; 8:45 am]

BILLING CODE 6717–01–P

DEPARTMENT OF ENERGY

Federal Energy Regulatory Commission

[FFP Project 27, LLC ; Project No. 12846–000]

Notice of Application Accepted for Filing and Soliciting Comments, Motions To Intervene, and Protests

November 26, 2007.

Take notice that the following hydroelectric application has been filed with the Commission and is available for public inspection:

a. *Type of Application:* Preliminary Permit.

b. *Project No:* 12846–000.

c. *Date Filed:* July 25, 2007.

d. *Applicant:* FFP Project 27, LLC.

e. *Name of Project:* Duncan Point Project.

f. *Location:* The project would be located on the Mississippi River in West Baton Rouge and East Baton Rouge Parishes, Louisiana. The project uses no dam or impoundment.

g. *Filed Pursuant to:* Federal Power Act, 16 U.S.C. 791(a)–825(r).

h. *Applicant Contact:* Mr. Dan Irvin, FFP Project 27, LLC, 69 Bridge Street, Manchester, MA 01944, phone (978) 232–3536.

i. *FERC Contact:* Mr. Robert Bell, (202) 502–6062.

j. *Deadline for filing motions to intervene, protests and comments:* 60 days from the issuance date of this notice.

All documents (original and eight copies) should be filed with: Kimberly D. Bose, Secretary, Federal Energy Regulatory Commission, 888 First Street, NE., Washington, DC 20426. Comments, protests, and interventions may be filed electronically via the Internet in lieu of paper; see 18 CFR 385.2001(a)(1)(iii) and the instructions on the Commission's Web site under the ''e-Filing'' link. The Commission strongly encourages electronic filings. Please include the project number (P–12846–000) on any comments or motions filed.

The Commission's Rules of Practice and Procedure require all interveners filing documents with the Commission to serve a copy of that document on each person in the official service list for the project. Further, if an intervener files comments or documents with the Commission relating to the merits of an issue that may affect the responsibilities of a particular resource agency, they must also serve a copy of the document on that resource agency.

k. *Competing Application:* Project No. 12817–000, Date Filed: July 23, 2007, Date Issued: October 2, 2007, Due Date: December 1, 2007.

l. *Description of Project:* The proposed project consists of: (1) 2,250 proposed 20 kilowatt Free Flow generating units having a total installed capacity of 43 megawatts, (2) a proposed transmission line, and (3) appurtenant facilities. The FFP Project 27, LLC's project would have an average annual generation of 197.1 gigawatt-hours and be sold to a local utility.

m. *Locations of Applications:* A copy of the application is available for inspection and reproduction at the Commission in the Public Reference Room, located at 888 First Street, NE., Room 2A, Washington, DC 20426, or by calling (202) 502–8371. This filing may also be viewed on the Commission's Web site at *http://www.ferc.gov* using the ''eLibrary'' link. Enter the docket number excluding the last three digits in the docket number field to access the document. For assistance, call toll-free 1–866–208–3676 or e-mail *FERCOnlineSupport@ferc.gov.* For TTY, call (202) 502–8659. A copy is also available for inspection and reproduction at the address in item h. above.

n. Individuals desiring to be included on the Commission's mailing list should so indicate by writing to the Secretary of the Commission.

o. Competing Preliminary Permit—Anyone desiring to file a competing application for preliminary permit for a proposed project must submit the competing application itself, or a notice of intent to file such an application, to the Commission on or before the specified comment date for the particular application (see 18 CFR 4.36). Submission of a timely notice of intent allows an interested person to file the competing preliminary permit application no later than 30 days after the specified comment date for the particular application. A competing preliminary permit application must conform with 18 CFR 4.30 and 4.36.

p. Competing Development Application—Any qualified development applicant desiring to file a competing development application must submit to the Commission, on or before a specified comment date for the particular application, either a competing development application or a notice of intent to file such an application. Submission of a timely notice of intent to file a development application allows an interested person to file the competing application no later than 120 days after the specified comment date for the particular application. A competing license

application must conform with 18 CFR 4.30 and 4.36.

q. Notice of Intent—A notice of intent must specify the exact name, business address, and telephone number of the prospective applicant, and must include an unequivocal statement of intent to submit, if such an application may be filed, either a preliminary permit application or a development application (specify which type of application). A notice of intent must be served on the applicant(s) named in this public notice.

r. Proposed Scope of Studies Under Permit—A preliminary permit, if issued, does not authorize construction. The term of the proposed preliminary permit would be 36 months. The work proposed under the preliminary permit would include economic analysis, preparation of preliminary engineering plans, and a study of environmental impacts. Based on the results of these studies, the Applicant would decide whether to proceed with the preparation of a development application to construct and operate the project.

s. Comments, Protests, or Motions to Intervene—Anyone may submit comments, a protest, or a motion to intervene in accordance with the requirements of Rules of Practice and Procedure, 18 CFR 385.210, .211, .214. In determining the appropriate action to take, the Commission will consider all protests or other comments filed, but only those who file a motion to intervene in accordance with the Commission's Rules may become a party to the proceeding. Any comments, protests, or motions to intervene must be received on or before the specified comment date for the particular application.

t. Filing and Service of Responsive Documents—Any filings must bear in all capital letters the title ''COMMENTS'', ''NOTICE OF INTENT TO FILE COMPETING APPLICATION'', ''COMPETING APPLICATION'', ''PROTEST'', or ''MOTION TO INTERVENE'', as applicable, and the Project Number of the particular application to which the filing refers. Any of the above-named documents must be filed by providing the original and the number of copies provided by the Commission's regulations to: The Secretary, Federal Energy Regulatory Commission, 888 First Street, NE., Washington, DC 20426. An additional copy must be sent to Director, Division of Hydropower Administration and Compliance, Federal Energy Regulatory Commission, at the above-mentioned address. A copy of any notice of intent, competing application or motion to intervene must also be served upon each representative of the Applicant specified in the particular application.

Comments, protests and interventions may be filed electronically via the Internet in lieu of paper; see 18 CFR 385.2001(a)(1)(iii) and the instructions on the Commission's Web site under the ''e-Filing'' link. The Commission strongly encourages electronic filings.

u. Agency Comments—Federal, State, and local agencies are invited to file comments on the described application. A copy of the application may be obtained by agencies directly from the Applicant. If an agency does not file comments within the time specified for filing comments, it will be presumed to have no comments. One copy of an agency's comments must also be sent to the Applicant's representatives.

Kimberly D. Bose,

Secretary.

[FR Doc. E7–23428 Filed 12–3–07; 8:45 am]

BILLING CODE 6717–01–P

DEPARTMENT OF ENERGY

Federal Energy Regulatory Commission

[Project No. 12867–000]

FFP Project 9, LLC; Notice of Application Accepted for Filing and Soliciting Comments, Motions To Intervene, and Protests

November 26, 2007.

Take notice that the following hydroelectric application has been filed with the Commission and is available for public inspection:

a. *Type of Application:* Preliminary Permit.

b. *Project No:* 12867–000.

c. *Date Filed:* July 25, 2007.

d. *Applicant:* FFP Project 9, LLC.

e. *Name of Project:* Carrollton Bend Project.

f. *Location:* The project would be located on the Mississippi River in Jefferson and Orleans Parishes, Louisiana. The project uses no dam or impoundment.

g. *Filed Pursuant to:* Federal Power Act, 16 U.S.C. 791(a)–825(r).

h. *Applicant Contact:* Mr. Dan Irvin, FFP Project 9, LLC, 69 Bridge Street, Manchester, MA 01944, phone (978) 232–3536.

i. *FERC Contact:* Mr. Robert Bell, (202) 502–6062.

j. *Deadline for filing motions to intervene, protests and comments:* 60 days from the issuance date of this notice.

All documents (original and eight copies) should be filed with: Kimberly D. Bose, Secretary, Federal Energy Regulatory Commission, 888 First Street, NE., Washington, DC 20426. Comments, protests, and interventions may be filed electronically via the Internet in lieu of paper; see 18 CFR 385.2001(a)(1)(iii) and the instructions on the Commission's Web site under the ''e-Filing'' link. The Commission strongly encourages electronic filings. Please include the project number (P–12867–000) on any comments or motions filed.

The Commission's Rules of Practice and Procedure require all intervenors filing documents with the Commission to serve a copy of that document on each person in the official service list for the project. Further, if an intervenor files comments or documents with the Commission relating to the merits of an issue that may affect the responsibilities of a particular resource agency, they must also serve a copy of the document on that resource agency.

k. *Competing Application:* Project No. 12833–000, *Date Filed:* July 23, 2007, *Date Issued:* October 3, 2007, *Due Date:* December 2, 2007.

l. *Description of Project:* The proposed project consists of: (1) 950 proposed 20 kilowatt Free Flow generating units having a total installed capacity of 19 megawatts, (2) a proposed transmission line, and (3) appurtenant facilities. The FFP Project 9, LLC's project would have an average annual generation of 83.22 gigawatt-hours and be sold to a local utility.

m. *Locations of Applications:* A copy of the application is available for inspection and reproduction at the Commission in the Public Reference Room, located at 888 First Street, NE., Room 2A, Washington DC 20426, or by calling (202) 502–8371. This filing may also be viewed on the Commission's Web site at *http://www.ferc.gov* using the ''eLibrary'' link. Enter the docket number excluding the last three digits in the docket number field to access the document. For assistance, call toll-free 1–866–208–3676 or e-mail *FERCOnlineSupport@ferc.gov.* For TTY, call (202) 502–8659. A copy is also available for inspection and reproduction at the address in item h. above.

n. Individuals desiring to be included on the Commission's mailing list should so indicate by writing to the Secretary of the Commission.

o. Competing Preliminary Permit—Anyone desiring to file a competing application for preliminary permit for a proposed project must submit the competing application itself, or a notice of intent to file such an application, to the Commission on or before the

specified comment date for the particular application (see 18 CFR 4.36). Submission of a timely notice of intent allows an interested person to file the competing preliminary permit application no later than 30 days after the specified comment date for the particular application. A competing preliminary permit application must conform with 18 CFR 4.30 and 4.36.

p. Competing Development Application—Any qualified development applicant desiring to file a competing development application must submit to the Commission, on or before a specified comment date for the particular application, either a competing development application or a notice of intent to file such an application. Submission of a timely notice of intent to file a development application allows an interested person to file the competing application no later than 120 days after the specified comment date for the particular application. A competing license application must conform with 18 CFR 4.30 and 4.36.

q. Notice of Intent—A notice of intent must specify the exact name, business address, and telephone number of the prospective applicant, and must include an unequivocal statement of intent to submit, if such an application may be filed, either a preliminary permit application or a development application (specify which type of application). A notice of intent must be served on the applicant(s) named in this public notice.

r. Proposed Scope of Studies Under Permit—A preliminary permit, if issued, does not authorize construction. The term of the proposed preliminary permit would be 36 months. The work proposed under the preliminary permit would include economic analysis, preparation of preliminary engineering plans, and a study of environmental impacts. Based on the results of these studies, the Applicant would decide whether to proceed with the preparation of a development application to construct and operate the project.

s. Comments, Protests, or Motions To Intervene—Anyone may submit comments, a protest, or a motion to intervene in accordance with the requirements of Rules of Practice and Procedure, 18 CFR 385.210, .211, .214. In determining the appropriate action to take, the Commission will consider all protests or other comments filed, but only those who file a motion to intervene in accordance with the Commission's Rules may become a party to the proceeding. Any comments, protests, or motions to intervene must be received on or before the specified comment date for the particular application.

t. Filing and Service of Responsive Documents—Any filings must bear in all capital letters the title ''COMMENTS'', ''NOTICE OF INTENT TO FILE COMPETING APPLICATION'', ''COMPETING APPLICATION'', ''PROTEST'', or ''MOTION TO INTERVENE'', as applicable, and the Project Number of the particular application to which the filing refers. Any of the above-named documents must be filed by providing the original and the number of copies provided by the Commission's regulations to: The Secretary, Federal Energy Regulatory Commission, 888 First Street, NE., Washington, DC 20426. An additional copy must be sent to Director, Division of Hydropower Administration and Compliance, Federal Energy Regulatory Commission, at the above-mentioned address. A copy of any notice of intent, competing application or motion to intervene must also be served upon each representative of the Applicant specified in the particular application.

Comments, protests and interventions may be filed electronically via the Internet in lieu of paper; see 18 CFR 385.2001(a)(1)(iii) and the instructions on the Commission's Web site under the ''e-Filing'' link. The Commission strongly encourages electronic filings.

u. Agency Comments—Federal, state, and local agencies are invited to file comments on the described application. A copy of the application may be obtained by agencies directly from the Applicant. If an agency does not file comments within the time specified for filing comments, it will be presumed to have no comments. One copy of an agency's comments must also be sent to the Applicant's representatives.

Kimberly D. Bose,

Secretary.

[FR Doc. E7–23429 Filed 12–3–07; 8:45 am]

BILLING CODE 6717–01–P

DEPARTMENT OF ENERGY

Federal Energy Regulatory Commission

[Project No. 12868–000]

FFP Project 26, LLC; Notice of Application Accepted for Filing and Soliciting Comments, Motions To Intervene, and Protests

November 26, 2007.

Take notice that the following hydroelectric application has been filed with the Commission and is available for public inspection:

a. *Type of Application:* Preliminary Permit.

b. *Project No:* 12868–000.

c. *Date Filed:* July 25, 2007.

d. *Applicant:* FFP Project 26, LLC.

e. *Name of Project:* Manchac Point Project.

f. *Location:* The project would be located on the Mississippi River in West Baton Rouge, East Baton Rouge, and Iberville Parishes, Louisiana. The project uses no dam or impoundment.

g. *Filed Pursuant to:* Federal Power Act, 16 U.S.C. 791(a)–825(r).

h. *Applicant Contact:* Mr. Dan Irvin, FFP Project 26, LLC, 69 Bridge Street, Manchester, MA 01944, phone (978) 232–3536.

i. *FERC Contact:* Mr. Robert Bell, (202) 502–6062.

j. *Deadline for filing motions to intervene, protests and comments:* 60 days from the issuance date of this notice.

All documents (original and eight copies) should be filed with: Kimberly D. Bose, Secretary, Federal Energy Regulatory Commission, 888 First Street, NE., Washington, DC 20426. Comments, protests, and interventions may be filed electronically via the Internet in lieu of paper; see 18 CFR 385.2001(a)(1)(iii) and the instructions on the Commission's Web site under the ''e-Filing'' link. The Commission strongly encourages electronic filings. Please include the project number (P–12868–000) on any comments or motions filed.

The Commission's Rules of Practice and Procedure require all intervenors filing documents with the Commission to serve a copy of that document on each person in the official service list for the project. Further, if an intervenor files comments or documents with the Commission relating to the merits of an issue that may affect the responsibilities of a particular resource agency, they must also serve a copy of the document on that resource agency.

k. *Competing Application:* Project No. 12822–000, *Date Filed:* July 23, 2007, *Date Issued:* October 2, 2007, *Due Date:* December 1, 2007.

l. *Description of Project:* The proposed project consists of: (1) 2,350 proposed 20 kilowatt Free Flow generating units having a total installed capacity of 47 megawatts, (2) a proposed transmission line, and (3) appurtenant facilities. The FFP Project 26, LLC's project would have an average annual generation of 205.86 gigawatt-hours and be sold to a local utility.

m. *Locations of Applications:* A copy of the application is available for inspection and reproduction at the Commission in the Public Reference

Room, located at 888 First Street, NE., Room 2A, Washington, DC 20426, or by calling (202) 502–8371. This filing may also be viewed on the Commission's Web site at *http://www.ferc.gov* using the ''eLibrary'' link. Enter the docket number excluding the last three digits in the docket number field to access the document. For assistance, call toll-free 1–866–208–3676 or e-mail *FERCOnlineSupport@ferc.gov*. For TTY, call (202) 502–8659. A copy is also available for inspection and reproduction at the address in item h. above.

n. Individuals desiring to be included on the Commission's mailing list should so indicate by writing to the Secretary of the Commission.

o. Competing Preliminary Permit—Anyone desiring to file a competing application for preliminary permit for a proposed project must submit the competing application itself, or a notice of intent to file such an application, to the Commission on or before the specified comment date for the particular application (see 18 CFR 4.36). Submission of a timely notice of intent allows an interested person to file the competing preliminary permit application no later than 30 days after the specified comment date for the particular application. A competing preliminary permit application must conform with 18 CFR 4.30 and 4.36.

p. Competing Development Application—Any qualified development applicant desiring to file a competing development application must submit to the Commission, on or before a specified comment date for the particular application, either a competing development application or a notice of intent to file such an application. Submission of a timely notice of intent to file a development application allows an interested person to file the competing application no later than 120 days after the specified comment date for the particular application. A competing license application must conform with 18 CFR 4.30 and 4.36.

q. Notice of Intent—A notice of intent must specify the exact name, business address, and telephone number of the prospective applicant, and must include an unequivocal statement of intent to submit, if such an application may be filed, either a preliminary permit application or a development application (specify which type of application). A notice of intent must be served on the applicant(s) named in this public notice.

r. Proposed Scope of Studies Under Permit—A preliminary permit, if issued, does not authorize construction. The term of the proposed preliminary permit would be 36 months. The work proposed under the preliminary permit would include economic analysis, preparation of preliminary engineering plans, and a study of environmental impacts. Based on the results of these studies, the Applicant would decide whether to proceed with the preparation of a development application to construct and operate the project.

s. Comments, Protests, or Motions to Intervene—Anyone may submit comments, a protest, or a motion to intervene in accordance with the requirements of Rules of Practice and Procedure, 18 CFR 385.210, .211, .214. In determining the appropriate action to take, the Commission will consider all protests or other comments filed, but only those who file a motion to intervene in accordance with the Commission's Rules may become a party to the proceeding. Any comments, protests, or motions to intervene must be received on or before the specified comment date for the particular application.

t. Filing and Service of Responsive Documents—Any filings must bear in all capital letters the title ''COMMENTS'', ''NOTICE OF INTENT TO FILE COMPETING APPLICATION'', ''COMPETING APPLICATION'', ''PROTEST'', or ''MOTION TO INTERVENE'', as applicable, and the Project Number of the particular application to which the filing refers. Any of the above-named documents must be filed by providing the original and the number of copies provided by the Commission's regulations to: The Secretary, Federal Energy Regulatory Commission, 888 First Street, NE., Washington, DC 20426. An additional copy must be sent to Director, Division of Hydropower Administration and Compliance, Federal Energy Regulatory Commission, at the above-mentioned address. A copy of any notice of intent, competing application or motion to intervene must also be served upon each representative of the Applicant specified in the particular application.

Comments, protests and interventions may be filed electronically via the Internet in lieu of paper; see 18 CFR 385.2001(a)(1)(iii) and the instructions on the Commission's Web site under the ''e-Filing'' link. The Commission strongly encourages electronic filings.

u. Agency Comments—Federal, State, and local agencies are invited to file comments on the described application. A copy of the application may be obtained by agencies directly from the Applicant. If an agency does not file comments within the time specified for filing comments, it will be presumed to have no comments. One copy of an agency's comments must also be sent to the Applicant's representatives.

Kimberly D. Bose,

Secretary.

[FR Doc. E7–23430 Filed 12–3–07; 8:45 am]

BILLING CODE 6717–01–P

DEPARTMENT OF ENERGY

Federal Energy Regulatory Commission

[Project No. 12873–000]

Hydro Green Energy, LLC; Notice of Application Accepted for Filing and Soliciting Comments, Motions To Intervene, and Protests

November 26, 2007.

Take notice that the following hydroelectric application has been filed with the Commission and is available for public inspection:

a. *Type of Application:* Preliminary Permit.

b. *Project No:* 12873–000.

c. *Date Filed:* July 25, 2007.

d. *Applicant:* Hydro Green Energy, LLC.

e. *Name of Project:* Louisiana 35 Project.

f. *Location:* The project would be located on the Mississippi River in Jefferson and Orleans Parishes, Louisiana. The project uses no dam or impoundment.

g. *Filed Pursuant to:* Federal Power Act, 16 U.S.C. 791(a)–825(r).

h. *Applicant Contact:* Mr. Wayne F. Krouse, Hydro Green Energy, LLC, 5090 Richmond Avenue #390, Houston, TX 77056, phone (877) 556–6566.

i. *FERC Contact:* Mr. Robert Bell, (202) 502–6062.

j. *Deadline for filing motions to intervene, protests and comments:* 60 days from the issuance date of this notice.

All documents (original and eight copies) should be filed with: Kimberly D. Bose, Secretary, Federal Energy Regulatory Commission, 888 First Street, NE., Washington, DC 20426. Comments, protests, and interventions may be filed electronically via the Internet in lieu of paper; see 18 CFR 385.2001(a)(1)(iii) and the instructions on the Commission's Web site under the ''e-Filing'' link. The Commission strongly encourages electronic filings. Please include the project number (P–12873–000) on any comments or motions filed.

The Commission's Rules of Practice and Procedure require all intervenors filing documents with the Commission

to serve a copy of that document on each person in the official service list for the project. Further, if an intervenor files comments or documents with the Commission relating to the merits of an issue that may affect the responsibilities of a particular resource agency, they must also serve a copy of the document on that resource agency.

k. *Competing Applications:* Project No. 12833–000, *Date Filed:* July 23, 2007, *Date Public Notice Issued:* October 3, 2007, *Due Date:* December 2, 2007, and Project No. 12829–000, Date filed: July 23, 2007, *Date Public Notice Issued:* October 19, 2007, *Date Due:* December 19, 2007.

l. *Description of Project:* The proposed project consists of: (1) 50 proposed 100 kilowatt dual ducted horizontal axis hydrokinetic generating units having a total installed capacity of 5 megawatts, (2) a proposed 3-miles-long, 13.6–kV transmission line, and (3) appurtenant facilities. The Hydro Green Energy, LLC's project would have an average annual generation of 82.87 gigawatt-hours and be sold to a local utility.

m. *Locations of Applications:* A copy of the application is available for inspection and reproduction at the Commission in the Public Reference Room, located at 888 First Street, NE., Room 2A, Washington DC 20426, or by calling (202) 502–8371. This filing may also be viewed on the Commission's Web site at *http://www.ferc.gov* using the ''eLibrary'' link. Enter the docket number excluding the last three digits in the docket number field to access the document. For assistance, call toll-free 1–866–208–3676 or e-mail *FERCOnlineSupport@ferc.gov.* For TTY, call (202) 502–8659. A copy is also available for inspection and reproduction at the address in item h. above.

n. Individuals desiring to be included on the Commission's mailing list should so indicate by writing to the Secretary of the Commission.

o. Competing Preliminary Permit—Anyone desiring to file a competing application for preliminary permit for a proposed project must submit the competing application itself, or a notice of intent to file such an application, to the Commission on or before the specified comment date for the particular application (see 18 CFR 4.36). Submission of a timely notice of intent allows an interested person to file the competing preliminary permit application no later than 30 days after the specified comment date for the particular application. A competing preliminary permit application must conform with 18 CFR 4.30 and 4.36.

p. Competing Development Application—Any qualified development applicant desiring to file a competing development application must submit to the Commission, on or before a specified comment date for the particular application, either a competing development application or a notice of intent to file such an application. Submission of a timely notice of intent to file a development application allows an interested person to file the competing application no later than 120 days after the specified comment date for the particular application. A competing license application must conform with 18 CFR 4.30 and 4.36.

q. Notice of Intent—A notice of intent must specify the exact name, business address, and telephone number of the prospective applicant, and must include an unequivocal statement of intent to submit, if such an application may be filed, either a preliminary permit application or a development application (specify which type of application). A notice of intent must be served on the applicant(s) named in this public notice.

r. Proposed Scope of Studies Under Permit—A preliminary permit, if issued, does not authorize construction. The term of the proposed preliminary permit would be 36 months. The work proposed under the preliminary permit would include economic analysis, preparation of preliminary engineering plans, and a study of environmental impacts. Based on the results of these studies, the Applicant would decide whether to proceed with the preparation of a development application to construct and operate the project.

s. Comments, Protests, or Motions To Intervene—Anyone may submit comments, a protest, or a motion to intervene in accordance with the requirements of Rules of Practice and Procedure, 18 CFR 385.210, .211, .214. In determining the appropriate action to take, the Commission will consider all protests or other comments filed, but only those who file a motion to intervene in accordance with the Commission's Rules may become a party to the proceeding. Any comments, protests, or motions to intervene must be received on or before the specified comment date for the particular application.

t. Filing and Service of Responsive Documents—Any filings must bear in all capital letters the title ''COMMENTS'', ''NOTICE OF INTENT TO FILE COMPETING APPLICATION'', ''COMPETING APPLICATION'', ''PROTEST'', or ''MOTION TO INTERVENE'', as applicable, and the Project Number of the particular application to which the filing refers. Any of the above-named documents must be filed by providing the original and the number of copies provided by the Commission's regulations to: The Secretary, Federal Energy Regulatory Commission, 888 First Street, NE., Washington, DC 20426. An additional copy must be sent to Director, Division of Hydropower Administration and Compliance, Federal Energy Regulatory Commission, at the above-mentioned address. A copy of any notice of intent, competing application or motion to intervene must also be served upon each representative of the Applicant specified in the particular application.

Comments, protests and interventions may be filed electronically via the Internet in lieu of paper; see 18 CFR 385.2001(a)(1)(iii) and the instructions on the Commission's Web site under the ''e-Filing'' link. The Commission strongly encourages electronic filings.

u. Agency Comments—Federal, state, and local agencies are invited to file comments on the described application. A copy of the application may be obtained by agencies directly from the Applicant. If an agency does not file comments within the time specified for filing comments, it will be presumed to have no comments. One copy of an agency's comments must also be sent to the Applicant's representatives.

Kimberly D. Bose,

Secretary.

[FR Doc. E7–23431 Filed 12–3–07; 8:45 am]

BILLING CODE 6717–01–P

DEPARTMENT OF ENERGY

Federal Energy Regulatory Commission

[Project No. 12875–000]

Hydro Green Energy, LLC; Notice of Application Accepted for Filing and Soliciting Comments, Motions To Intervene, and Protests

November 26, 2007.

Take notice that the following hydroelectric application has been filed with the Commission and is available for public inspection:

a. *Type of Application:* Preliminary Permit.

b. *Project No:* 12875–000.

c. *Date Filed:* July 25, 2007.

d. *Applicant:* Hydro Green Energy, LLC.

e. *Name of Project:* Duncan Point Project.

f. *Location:* The project would be located on the Mississippi River in West

Baton Rouge and East Baton Rouge Parishes, Louisiana. The project uses no dam or impoundment.

g. *Filed Pursuant to:* Federal Power Act, 16 U.S.C. 791(a)–825(r).

h. *Applicant Contact:* Mr. Wayne F. Krouse, Hydro Green Energy, LLC, 5090 Richmond Avenue #390, Houston, TX 77056, phone (877) 556–6566.

i. *FERC Contact:* Mr. Robert Bell, (202) 502–6062.

j. *Deadline for filing motions to intervene, protests and comments:* 60 days from the issuance date of this notice.

All documents (original and eight copies) should be filed with: Kimberly D. Bose, Secretary, Federal Energy Regulatory Commission, 888 First Street, NE., Washington, DC 20426. Comments, protests, and interventions may be filed electronically via the Internet in lieu of paper; see 18 CFR 385.2001(a)(1)(iii) and the instructions on the Commission's Web site under the ''e-Filing'' link. The Commission strongly encourages electronic filings. Please include the project number (P–12875–000) on any comments or motions filed.

The Commission's Rules of Practice and Procedure require all intervenors filing documents with the Commission to serve a copy of that document on each person in the official service list for the project. Further, if an intervenor files comments or documents with the Commission relating to the merits of an issue that may affect the responsibilities of a particular resource agency, they must also serve a copy of the document on that resource agency.

k. *Competing Application:* Project No. 12817–000, Date Filed: July 23, 2007, Date Issued: October 2, 2007, Due Date: December 1, 2007.

l. *Description of Project:* The proposed project consists of: (1) 50 proposed 100 kilowatt dual ducted horizontal axis hydrokinetic generating units having a total installed capacity of 5 megawatts, (2) a proposed 3-miles-long, 13.6-kV transmission line, and (3) appurtenant facilities. The Hydro Green Energy, LLC's project would have an average annual generation of 82.87 gigawatt-hours and be sold to a local utility.

m. *Locations of Applications:* A copy of the application is available for inspection and reproduction at the Commission in the Public Reference Room, located at 888 First Street, NE., Room 2A, Washington, DC 20426, or by calling (202) 502–8371. This filing may also be viewed on the Commission's Web site at *http://www.ferc.gov* using the ''eLibrary'' link. Enter the docket number excluding the last three digits in the docket number field to access the document. For assistance, call toll-free 1–866–208–3676 or e-mail *FERCOnlineSupport@ferc.gov.* For TTY, call (202) 502–8659. A copy is also available for inspection and reproduction at the address in item h. above.

n. Individuals desiring to be included on the Commission's mailing list should so indicate by writing to the Secretary of the Commission.

o. *Competing Preliminary Permit*—Anyone desiring to file a competing application for preliminary permit for a proposed project must submit the competing application itself, or a notice of intent to file such an application, to the Commission on or before the specified comment date for the particular application (see 18 CFR 4.36). Submission of a timely notice of intent allows an interested person to file the competing preliminary permit application no later than 30 days after the specified comment date for the particular application. A competing preliminary permit application must conform with 18 CFR 4.30 and 4.36.

p. *Competing Development Application*—Any qualified development applicant desiring to file a competing development application must submit to the Commission, on or before a specified comment date for the particular application, either a competing development application or a notice of intent to file such an application. Submission of a timely notice of intent to file a development application allows an interested person to file the competing application no later than 120 days after the specified comment date for the particular application. A competing license application must conform with 18 CFR 4.30 and 4.36.

q. *Notice of Intent*—A notice of intent must specify the exact name, business address, and telephone number of the prospective applicant, and must include an unequivocal statement of intent to submit, if such an application may be filed, either a preliminary permit application or a development application (specify which type of application). A notice of intent must be served on the applicant(s) named in this public notice.

r. *Proposed Scope of Studies Under Permit*—A preliminary permit, if issued, does not authorize construction. The term of the proposed preliminary permit would be 36 months. The work proposed under the preliminary permit would include economic analysis, preparation of preliminary engineering plans, and a study of environmental impacts. Based on the results of these studies, the Applicant would decide whether to proceed with the preparation of a development application to construct and operate the project.

s. *Comments, Protests, or Motions To Intervene*—Anyone may submit comments, a protest, or a motion to intervene in accordance with the requirements of Rules of Practice and Procedure, 18 CFR 385.210, .211, .214. In determining the appropriate action to take, the Commission will consider all protests or other comments filed, but only those who file a motion to intervene in accordance with the Commission's Rules may become a party to the proceeding. Any comments, protests, or motions to intervene must be received on or before the specified comment date for the particular application.

t. *Filing and Service of Responsive Documents*—Any filings must bear in all capital letters the title ''COMMENTS'', ''NOTICE OF INTENT TO FILE COMPETING APPLICATION'', ''COMPETING APPLICATION'', ''PROTEST'', or ''MOTION TO INTERVENE'', as applicable, and the Project Number of the particular application to which the filing refers. Any of the above-named documents must be filed by providing the original and the number of copies provided by the Commission's regulations to: The Secretary, Federal Energy Regulatory Commission, 888 First Street, NE., Washington, DC 20426. An additional copy must be sent to Director, Division of Hydropower Administration and Compliance, Federal Energy Regulatory Commission, at the above-mentioned address. A copy of any notice of intent, competing application or motion to intervene must also be served upon each representative of the Applicant specified in the particular application.

Comments, protests and interventions may be filed electronically via the Internet in lieu of paper; see 18 CFR 385.2001(a)(1)(iii) and the instructions on the Commission's Web site under the ''e-Filing'' link. The Commission strongly encourages electronic filings.

u. *Agency Comments*—Federal, State, and local agencies are invited to file comments on the described application. A copy of the application may be obtained by agencies directly from the Applicant. If an agency does not file comments within the time specified for filing comments, it will be presumed to have no comments. One copy of an agency's comments must also be sent to the Applicant's representatives.

Kimberly D. Bose,

Secretary.

[FR Doc. E7–23432 Filed 12–3–07; 8:45 am]

BILLING CODE 6717–01–P

DEPARTMENT OF ENERGY

Federal Energy Regulatory Commission

[Project No. 12880–000]

Hydro Green Energy, LLC; Notice of Application Accepted for Filing and Soliciting Comments, Motions To Intervene, and Protests

November 26, 2007.

Take notice that the following hydroelectric application has been filed with the Commission and is available for public inspection:

a. *Type of Application:* Preliminary Permit.

b. *Project No.:* 12880–000.

c. *Date Filed:* July 25, 2007.

d. *Applicant:* Hydro Green Energy, LLC.

e. *Name of Project:* Manchac Point Project.

f. *Location:* The project would be located on the Mississippi River in West Baton Rouge, East Baton Rouge, and Iberville Parishes, Louisiana. The project uses no dam or impoundment.

g. *Filed Pursuant to:* Federal Power Act, 16 U.S.C. 791(a)–825(r).

h. *Applicant Contact:* Mr. Wayne F. Krouse, Hydro Green Energy, LLC, 5090 Richmond Avenue #390, Houston, TX 77056, phone (877) 556–6566.

i. *FERC Contact:* Mr. Robert Bell, (202) 502–6062.

j. *Deadline for filing motions to intervene, protests and comments:* 60 days from the issuance date of this notice.

All documents (original and eight copies) should be filed with: Kimberly D. Bose, Secretary, Federal Energy Regulatory Commission, 888 First Street, NE., Washington, DC 20426. Comments, protests, and interventions may be filed electronically via the Internet in lieu of paper; see 18 CFR 385.2001(a)(1)(iii) and the instructions on the Commission's Web site under the ''e-Filing'' link. The Commission strongly encourages electronic filings. Please include the project number (P–12880–000) on any comments or motions filed.

The Commission's Rules of Practice and Procedure require all intervenors filing documents with the Commission to serve a copy of that document on each person in the official service list for the project. Further, if an intervenor files comments or documents with the Commission relating to the merits of an issue that may affect the responsibilities of a particular resource agency, they must also serve a copy of the document on that resource agency.

k. *Competing Application:* Project No. 12822–000, *Date Filed:* July 23, 2007, *Date Issued:* October 2, 2007, *Due Date:* December 1, 2007.

l. *Description of Project:* The proposed project consists of: (1) 50 proposed 100 kilowatt dual ducted horizontal axis hydrokinetic generating units having a total installed capacity of 5 megawatts, (2) a proposed 3-mile-long, 13.6-kV transmission line, and (3) appurtenant facilities. The Hydro Green Energy, LLC's project would have an average annual generation of 82.87 gigawatt-hours and be sold to a local utility.

m. *Locations of Applications:* A copy of the application is available for inspection and reproduction at the Commission in the Public Reference Room, located at 888 First Street, NE., Room 2A, Washington, DC 20426, or by calling (202) 502–8371. This filing may also be viewed on the Commission's Web site at *http://www.ferc.gov* using the ''eLibrary'' link. Enter the docket number excluding the last three digits in the docket number field to access the document. For assistance, call toll-free 1–866–208–3676 or e-mail *FERCOnlineSupport@ferc.gov.* For TTY, call (202) 502–8659. A copy is also available for inspection and reproduction at the address in item h. above.

n. Individuals desiring to be included on the Commission's mailing list should so indicate by writing to the Secretary of the Commission.

o. *Competing Preliminary Permit*—Anyone desiring to file a competing application for preliminary permit for a proposed project must submit the competing application itself, or a notice of intent to file such an application, to the Commission on or before the specified comment date for the particular application (see 18 CFR 4.36). Submission of a timely notice of intent allows an interested person to file the competing preliminary permit application no later than 30 days after the specified comment date for the particular application. A competing preliminary permit application must conform with 18 CFR 4.30 and 4.36.

p. *Competing Development Application*—Any qualified development applicant desiring to file a competing development application must submit to the Commission, on or before a specified comment date for the particular application, either a competing development application or a notice of intent to file such an application. Submission of a timely notice of intent to file a development application allows an interested person to file the competing application no later than 120 days after the specified comment date for the particular application. A competing license application must conform with 18 CFR 4.30 and 4.36.

q. *Notice of Intent*—A notice of intent must specify the exact name, business address, and telephone number of the prospective applicant, and must include an unequivocal statement of intent to submit, if such an application may be filed, either a preliminary permit application or a development application (specify which type of application). A notice of intent must be served on the applicant(s) named in this public notice.

r. *Proposed Scope of Studies Under Permit*—A preliminary permit, if issued, does not authorize construction. The term of the proposed preliminary permit would be 36 months. The work proposed under the preliminary permit would include economic analysis, preparation of preliminary engineering plans, and a study of environmental impacts. Based on the results of these studies, the Applicant would decide whether to proceed with the preparation of a development application to construct and operate the project.

s. *Comments, Protests, or Motions To Intervene*—Anyone may submit comments, a protest, or a motion to intervene in accordance with the requirements of Rules of Practice and Procedure, 18 CFR 385.210, .211, .214. In determining the appropriate action to take, the Commission will consider all protests or other comments filed, but only those who file a motion to intervene in accordance with the Commission's Rules may become a party to the proceeding. Any comments, protests, or motions to intervene must be received on or before the specified comment date for the particular application.

t. *Filing and Service of Responsive Documents*—Any filings must bear in all capital letters the title ''COMMENTS'', ''NOTICE OF INTENT TO FILE COMPETING APPLICATION'', ''COMPETING APPLICATION'', ''PROTEST'', or ''MOTION TO INTERVENE'', as applicable, and the Project Number of the particular application to which the filing refers. Any of the above-named documents must be filed by providing the original and the number of copies provided by the Commission's regulations to: The Secretary, Federal Energy Regulatory Commission, 888 First Street, NE., Washington, DC 20426. An additional copy must be sent to Director, Division of Hydropower Administration and Compliance, Federal Energy Regulatory Commission, at the above-mentioned address. A copy of any notice of intent, competing application or motion to intervene must also be served upon each

representative of the Applicant specified in the particular application.

Comments, protests and interventions may be filed electronically via the Internet in lieu of paper; see 18 CFR 385.2001(a)(1)(iii) and the instructions on the Commission's Web site under the ''e-Filing'' link. The Commission strongly encourages electronic filings.

u. *Agency Comments*—Federal, State, and local agencies are invited to file comments on the described application. A copy of the application may be obtained by agencies directly from the Applicant. If an agency does not file comments within the time specified for filing comments, it will be presumed to have no comments. One copy of an agency's comments must also be sent to the Applicant's representatives.

Kimberly D. Bose,

Secretary.

[FR Doc. E7–23433 Filed 12–3–07; 8:45 am]

BILLING CODE 6717–01–P

DEPARTMENT OF ENERGY

Federal Energy Regulatory Commission

[Project No. 12902–000]

BPUS Generation Development, LLC; Notice of Application Accepted for Filing and Soliciting Motions To Intervene, Protests, and Comments

November 26, 2007.

Take notice that the following hydroelectric application has been filed with the Commission and is available for public inspection:

a. *Type of Application:* Preliminary Permit.

b. *Project No.:* 12902–000.

c. *Date filed:* July 30, 2007.

d. *Applicant:* BPUS Generation Development, LLC.

e. *Name of Project:* Allegheny Lock & Dam No. 2 Hydroelectric Project.

f. *Location:* Allegheny River in Allegheny County, Pennsylvania. It would use the U.S. Army Corps of Engineers' Allegheny Lock & Dam No. 2.

g. *Filed Pursuant to:* Federal Power Act, 16 U.S.C. 791(a)—825(r).

h. *Applicant Contact:* Mr. Jeffrey M. Auser, P.E., BPUS Generation Development, LLC, 225 Greenfield Parkway, Suite 201, Liverpool, NY 13088, (315) 413–2700.

i. *FERC Contact:* Robert Bell, (202) 502–4126.

j. *Deadline for filing comments, protests, and motions to intervene:* 60 days from the issuance date of this notice.

All documents (original and eight copies) should be filed with: Kimberly D. Bose, Secretary, Federal Energy Regulatory Commission, 888 First Street, NE., Washington, DC 20426. Comments, protests, and interventions may be filed electronically via the Internet in lieu of paper; see 18 CFR 385.2001(a)(1)(iii) and the instructions on the Commission's Web site under the ''e-Filing'' link. The Commission strongly encourages electronic filings. Please include the project number (P–12902–000) on any comments or motions filed.

The Commission's Rules of Practice and Procedure require all intervenors filing documents with the Commission to serve a copy of that document on each person in the official service list for the project. Further, if an intervenor files comments or documents with the Commission relating to the merits of an issue that may affect the responsibilities of a particular resource agency, they must also serve a copy of the document on that resource agency.

k. *Description of Project:* The proposed project using the U.S. Army Corps of Engineers' Allegheny Lock & Dam No. 2 and operated in a run-of-river mode would consist of: (1) A new 125-foot-long, 160-foot-wide, 60-foot-high concrete powerhouse; (2) a new intake channel and tailrace channel on the north side of the dam, opposite the existing lock structure; (3) three turbine/generator units with a combined installed capacity of 12 megawatts; (4) a new 10,000-foot-long above ground transmission line extending from the switchyard near the powerhouse to an interconnection point with an existing transmission line located east of the dam and proposed powerhouse; and (5) appurtenant facilities. The proposed Allegheny Lock & Dam No. 2 Project would have an average annual generation of 66 gigawatt-hours.

l. This filing is available for review at the Commission in the Public Reference Room or may be viewed on the Commission's Web site at *http://www.ferc.gov* using the ''eLibrary'' link. Enter the docket number excluding the last three digits in the docket number field to access the document. For assistance, call toll-free 1–866–208–3676 or e-mail *FERCONLINESUPPORT@FERC.GOV.* For TTY, call (202) 502–8659. A copy is also available for inspection and reproduction at the address in item h above.

m. *Competing Preliminary Permit*—Anyone desiring to file a competing application for preliminary permit for a proposed project must submit the competing application itself, or a notice of intent to file such an application, to the Commission on or before the specified comment date for the particular application (see 18 CFR 4.36). Submission of a timely notice of intent allows an interested person to file the competing preliminary permit application no later than 30 days after the specified comment date for the particular application. A competing preliminary permit application must conform with 18 CFR 4.30 and 4.36.

n. *Competing Development Application*—Any qualified development applicant desiring to file a competing development application must submit to the Commission, on or before a specified comment date for the particular application, either a competing development application or a notice of intent to file such an application. Submission of a timely notice of intent to file a development application allows an interested person to file the competing application no later than 120 days after the specified comment date for the particular application. A competing license application must conform with 18 CFR 4.30 and 4.36.

o. *Notice of Intent*—A notice of intent must specify the exact name, business address, and telephone number of the prospective applicant, and must include an unequivocal statement of intent to submit, if such an application may be filed, either a preliminary permit application or a development application (specify which type of application). A notice of intent must be served on the applicant(s) named in this public notice.

p. *Proposed Scope of Studies Under Permit*—A preliminary permit, if issued, does not authorize construction. The term of the proposed preliminary permit would be 36 months. The work proposed under the preliminary permit would include economic analysis, preparation of preliminary engineering plans, and a study of environmental impacts. Based on the results of these studies, the Applicant would decide whether to proceed with the preparation of a development application to construct and operate the project.

q. *Comments, Protests, or Motions To Intervene*—Anyone may submit comments, a protest, or a motion to intervene in accordance with the requirements of Rules of Practice and Procedure, 18 CFR 385.210, .211, .214. In determining the appropriate action to take, the Commission will consider all protests or other comments filed, but only those who file a motion to intervene in accordance with the Commission's Rules may become a party to the proceeding. Any comments, protests, or motions to intervene must be received on or before the specified

comment date for the particular application.

r. *Filing and Service of Responsive Documents*—Any filings must bear in all capital letters the title ''COMMENTS'', ''NOTICE OF INTENT TO FILE COMPETING APPLICATION'', ''COMPETING APPLICATION'', ''PROTEST'', and ''MOTION TO INTERVENE'', as applicable, and the Project Number of the particular application to which the filing refers. Any of the above-named documents must be filed by providing the original and the number of copies provided by the Commission's regulations to: The Secretary, Federal Energy Regulatory Commission, 888 First Street, NE., Washington, DC 20426. An additional copy must be sent to Director, Division of Hydropower Administration and Compliance, Federal Energy Regulatory Commission, at the above-mentioned address. A copy of any notice of intent, competing application or motion to intervene must also be served upon each representative of the Applicant specified in the particular application.

s. *Agency Comments*—Federal, state, and local agencies are invited to file comments on the described application. A copy of the application may be obtained by agencies directly from the Applicant. If an agency does not file comments within the time specified for filing comments, it will be presumed to have no comments. One copy of an agency's comments must also be sent to the Applicant's representatives.

Kimberly D. Bose,

Secretary.

[FR Doc. E7–23434 Filed 12–3–07; 8:45 am]

BILLING CODE 6717–01–P

DEPARTMENT OF ENERGY

Federal Energy Regulatory Commission

[Project No. 12904–000]

BPUS Generation Development, LLC; Notice of Application Accepted for Filing and Soliciting Motions To Intervene, Protests, and Comments

November 26, 2007.

Take notice that the following hydroelectric application has been filed with the Commission and is available for public inspection:

a. *Type of Application:* Preliminary Permit.

b. *Project No.:* 12904–000.

c. *Date filed:* July 30, 2007.

d. *Applicant:* BPUS Generation Development, LLC.

e. *Name of Project:* Dashields Locks & Dam Hydroelectric Project.

f. *Location:* Ohio River in Allegheny County, Pennsylvania. It would use the U.S. Army Corps of Engineers' Dashields Locks & Dam.

g. *Filed Pursuant to:* Federal Power Act, 16 U.S.C. 791(a)–825(r).

h. *Applicant Contact:* Mr. Jeffrey M. Auser, P.E., BPUS Generation Development, LLC, 225 Greenfield Parkway, Suite 201, Liverpool, NY 13088, (315) 413–2700.

i. *FERC Contact:* Robert Bell, (202) 502–4126.

j. *Deadline for filing comments, protests, and motions to intervene:* 60 days from the issuance date of this notice.

All documents (original and eight copies) should be filed with: Secretary, Federal Energy Regulatory Commission, 888 First Street, NE., Washington, DC 20426. Comments, protests, and interventions may be filed electronically via the Internet in lieu of paper; see 18 CFR 385.2001(a)(1)(iii) and the instructions on the Commission's Web site under the ''e-Filing'' link. The Commission strongly encourages electronic filings. Please include the project number (P–12904–000) on any comments or motions filed.

The Commission's Rules of Practice and Procedure require all intervenors filing documents with the Commission to serve a copy of that document on each person in the official service list for the project. Further, if an intervenor files comments or documents with the Commission relating to the merits of an issue that may affect the responsibilities of a particular resource agency, they must also serve a copy of the document on that resource agency.

k. *Description of Project:* The proposed project using the U.S. Army Corps of Engineers' Dashields Locks & Dam and operated in a run-of-river mode would consist of: (1) A new 200-foot long, 200-foot wide, 50-foot high concrete powerhouse; (2) a new intake channel and tailrace channel on the northeastern side of the river opposite the existing locks structure; (3) five turbine/generator units with a combined installed capacity of 25 megawatts; (4) a new 11,500-foot long above ground transmission line extending from the switchyard near the powerhouse to an interconnection point with an existing transmission line located northwest of the powerhouse; and (5) appurtenant facilities. The proposed Dashields Locks & Dam Project would have an average annual generation of 120 gigawatt-hours.

l. This filing is available for review at the Commission in the Public Reference Room or may be viewed on the Commission's Web site at *http://www.ferc.gov* using the ''eLibrary'' link. Enter the docket number excluding the last three digits in the docket number field to access the document. For assistance, call toll-free 1–866–208–3676 or e-mail *FERCONLINESUPPORT@FERC.GOV.* For TTY, call (202) 502–8659. A copy is also available for inspection and reproduction at the address in item h above.

m. *Competing Preliminary Permit*—Anyone desiring to file a competing application for preliminary permit for a proposed project must submit the competing application itself, or a notice of intent to file such an application, to the Commission on or before the specified comment date for the particular application (see 18 CFR 4.36). Submission of a timely notice of intent allows an interested person to file the competing preliminary permit application no later than 30 days after the specified comment date for the particular application. A competing preliminary permit application must conform with 18 CFR 4.30 and 4.36.

n. *Competing Development Application*—Any qualified development applicant desiring to file a competing development application must submit to the Commission, on or before a specified comment date for the particular application, either a competing development application or a notice of intent to file such an application. Submission of a timely notice of intent to file a development application allows an interested person to file the competing application no later than 120 days after the specified comment date for the particular application. A competing license application must conform with 18 CFR 4.30 and 4.36.

o. *Notice of Intent*—A notice of intent must specify the exact name, business address, and telephone number of the prospective applicant, and must include an unequivocal statement of intent to submit, if such an application may be filed, either a preliminary permit application or a development application (specify which type of application). A notice of intent must be served on the applicant(s) named in this public notice.

p. *Proposed Scope of Studies Under Permit*—A preliminary permit, if issued, does not authorize construction. The term of the proposed preliminary permit would be 36 months. The work proposed under the preliminary permit would include economic analysis, preparation of preliminary engineering plans, and a study of environmental impacts. Based on the results of these studies, the Applicant would decide

whether to proceed with the preparation of a development application to construct and operate the project.

q. *Comments, Protests, or Motions to Intervene*—Anyone may submit comments, a protest, or a motion to intervene in accordance with the requirements of Rules of Practice and Procedure, 18 CFR 385.210, .211, .214. In determining the appropriate action to take, the Commission will consider all protests or other comments filed, but only those who file a motion to intervene in accordance with the Commission's Rules may become a party to the proceeding. Any comments, protests, or motions to intervene must be received on or before the specified comment date for the particular application.

r. *Filing and Service of Responsive Documents*—Any filings must bear in all capital letters the title ''COMMENTS'', ''NOTICE OF INTENT TO FILE COMPETING APPLICATION'', ''COMPETING APPLICATION'', ''PROTEST'', and ''MOTION TO INTERVENE'', as applicable, and the Project Number of the particular application to which the filing refers. Any of the above-named documents must be filed by providing the original and the number of copies provided by the Commission's regulations to: The Secretary, Federal Energy Regulatory Commission, 888 First Street, NE., Washington, DC 20426. An additional copy must be sent to Director, Division of Hydropower Administration and Compliance, Federal Energy Regulatory Commission, at the above-mentioned address. A copy of any notice of intent, competing application or motion to intervene must also be served upon each representative of the Applicant specified in the particular application.

s. *Agency Comments*—Federal, State, and local agencies are invited to file comments on the described application. A copy of the application may be obtained by agencies directly from the Applicant. If an agency does not file comments within the time specified for filing comments, it will be presumed to have no comments. One copy of an agency's comments must also be sent to the Applicant's representatives.

Kimberly D. Bose,

Secretary.

[FR Doc. E7–23435 Filed 12–3–07; 8:45 am]

BILLING CODE 6717–01–P

DEPARTMENT OF ENERGY

Federal Energy Regulatory Commission

[Project No. 12905–000]

BPUS Generation Development, LLC; Notice of Application Accepted for Filing and Soliciting Motions To Intervene, Protests, and Comments

November 26, 2007.

Take notice that the following hydroelectric application has been filed with the Commission and is available for public inspection:

a. *Type of Application:* Preliminary Permit.

b. *Project No.:* 12905–000.

c. *Date filed:* July 30, 2007.

d. *Applicant:* BPUS Generation Development, LLC.

e. *Name of Project:* Emsworth Locks & Dam Hydroelectric Project.

f. *Location:* Ohio River in Allegheny County, Pennsylvania. It would use the U.S. Army Corps of Engineers' Emsworth Locks & Dam.

g. *Filed Pursuant to:* Federal Power Act, 16 U.S.C. 791(a)–825(r).

h. *Applicant Contact:* Mr. Jeffrey M. Auser, P.E., BPUS Generation Development, LLC, 225 Greenfield Parkway, Suite 201, Liverpool, NY 13088, (315) 413–2700.

i. *FERC Contact:* Robert Bell, (202) 502–4126.

j. *Deadline for filing comments, protests, and motions to intervene:* 60 days from the issuance date of this notice.

All documents (original and eight copies) should be filed with: Kimberly D. Bose, Secretary, Federal Energy Regulatory Commission, 888 First Street, NE., Washington, DC 20426. Comments, protests, and interventions may be filed electronically via the Internet in lieu of paper; see 18 CFR 385.2001(a)(1)(iii) and the instructions on the Commission's Web site under the ''e-Filing'' link. The Commission strongly encourages electronic filings. Please include the project number (P–12905–000) on any comments or motions filed.

The Commission's Rules of Practice and Procedure require all intervenors filing documents with the Commission to serve a copy of that document on each person in the official service list for the project. Further, if an intervenor files comments or documents with the Commission relating to the merits of an issue that may affect the responsibilities of a particular resource agency, they must also serve a copy of the document on that resource agency.

k. *Description of Project:* The proposed project using the U.S. Army Corps of Engineers' Emsworth Locks & Dam and operated in a run-of-river mode would consist of: (1) A new 200-foot-long, 200-foot-wide, 50-foot-high concrete powerhouse; (2) a new intake channel and tailrace channel on the southern bank of the main channel, on Neville Island directly opposite the existing locks structure; (3) five turbine/generator units with a combined installed capacity of 32.7 megawatts; (4) a new 11,500-foot-long aboveground transmission line extending from the switchyard near the powerhouse to an interconnection point with an existing transmission line located southwest of the powerhouse; and (5) appurtenant facilities. The proposed Emsworth Locks & Dam Project would have an average annual generation of 141.3 gigawatt-hours.

l. This filing is available for review at the Commission in the Public Reference Room or may be viewed on the Commission's Web site at *http://www.ferc.gov* using the ''eLibrary'' link. Enter the docket number excluding the last three digits in the docket number field to access the document. For assistance, call toll-free 1–866–208–3676 or e-mail *FERCONLINESUPPORT@FERC.GOV.* For TTY, call (202) 502–8659. A copy is also available for inspection and reproduction at the address in item h above.

m. *Competing Preliminary Permit*—Anyone desiring to file a competing application for preliminary permit for a proposed project must submit the competing application itself, or a notice of intent to file such an application, to the Commission on or before the specified comment date for the particular application (see 18 CFR 4.36). Submission of a timely notice of intent allows an interested person to file the competing preliminary permit application no later than 30 days after the specified comment date for the particular application. A competing preliminary permit application must conform with 18 CFR 4.30 and 4.36.

n. *Competing Development Application*—Any qualified development applicant desiring to file a competing development application must submit to the Commission, on or before a specified comment date for the particular application, either a competing development application or a notice of intent to file such an application. Submission of a timely notice of intent to file a development application allows an interested person to file the competing application no later than 120 days after the specified comment date for the particular application. A competing license

application must conform with 18 CFR 4.30 and 4.36.

o. *Notice of Intent*—A notice of intent must specify the exact name, business address, and telephone number of the prospective applicant, and must include an unequivocal statement of intent to submit, if such an application may be filed, either a preliminary permit application or a development application (specify which type of application). A notice of intent must be served on the applicant(s) named in this public notice.

p. *Proposed Scope of Studies Under Permit*—A preliminary permit, if issued, does not authorize construction. The term of the proposed preliminary permit would be 36 months. The work proposed under the preliminary permit would include economic analysis, preparation of preliminary engineering plans, and a study of environmental impacts. Based on the results of these studies, the Applicant would decide whether to proceed with the preparation of a development application to construct and operate the project.

q. *Comments, Protests, or Motions To Intervene*—Anyone may submit comments, a protest, or a motion to intervene in accordance with the requirements of Rules of Practice and Procedure, 18 CFR 385.210, .211, .214. In determining the appropriate action to take, the Commission will consider all protests or other comments filed, but only those who file a motion to intervene in accordance with the Commission's Rules may become a party to the proceeding. Any comments, protests, or motions to intervene must be received on or before the specified comment date for the particular application.

r. *Filing and Service of Responsive Documents*—Any filings must bear in all capital letters the title ''COMMENTS'', ''NOTICE OF INTENT TO FILE COMPETING APPLICATION'', ''COMPETING APPLICATION'', ''PROTEST'', and ''MOTION TO INTERVENE'', as applicable, and the Project Number of the particular application to which the filing refers. Any of the above-named documents must be filed by providing the original and the number of copies provided by the Commission's regulations to: The Secretary, Federal Energy Regulatory Commission, 888 First Street, NE., Washington, DC 20426. An additional copy must be sent to Director, Division of Hydropower Administration and Compliance, Federal Energy Regulatory Commission, at the above-mentioned address. A copy of any notice of intent, competing application or motion to intervene must also be served upon each representative of the Applicant specified in the particular application.

s. *Agency Comments*—Federal, State, and local agencies are invited to file comments on the described application. A copy of the application may be obtained by agencies directly from the Applicant. If an agency does not file comments within the time specified for filing comments, it will be presumed to have no comments. One copy of an agency's comments must also be sent to the Applicant's representatives.

Kimberly D. Bose,

Secretary.

[FR Doc. E7–23436 Filed 12–3–07; 8:45 am]

BILLING CODE 6717–01–P

DEPARTMENT OF ENERGY

Federal Energy Regulatory Commission

[Project No. 12906–000]

BPUS Generation Development, LLC; Notice of Application Accepted for Filing and Soliciting Motions To Intervene, Protests, and Comments

November 26, 2007.

Take notice that the following hydroelectric application has been filed with the Commission and is available for public inspection:

a. *Type of Application:* Preliminary Permit.

b. *Project No.:* 12906–000.

c. *Date filed:* July 30, 2007.

d. *Applicant:* BPUS Generation Development, LLC.

e. *Name of Project:* Monongahela Lock & Dam No. 4 Hydroelectric Project.

f. *Location:* Monongahela River in Westmoreland County, Pennsylvania. It would use the U.S. Army Corps of Engineers' Monongahela Lock & Dam No. 4.

g. *Filed Pursuant to:* Federal Power Act, 16 U.S.C. 791(a)–825(r).

h. *Applicant Contact:* Mr. Jeffrey M. Auser, P.E., BPUS Generation Development, LLC, 225 Greenfield Parkway, Suite 201, Liverpool, NY 13088, (315) 413–2700.

i. *FERC Contact:* Robert Bell, (202) 502–4126.

j. *Deadline for filing comments, protests, and motions to intervene:* 60 days from the issuance date of this notice.

All documents (original and eight copies) should be filed with: Secretary, Federal Energy Regulatory Commission, 888 First Street, NE., Washington, DC 20426. Comments, protests, and interventions may be filed electronically via the Internet in lieu of paper; see 18 CFR 385.2001(a)(1)(iii) and the instructions on the Commission's Web site under the ''e-Filing'' link. The Commission strongly encourages electronic filings. Please include the project number (P–12906–000) on any comments or motions filed.

The Commission's Rules of Practice and Procedure require all intervenors filing documents with the Commission to serve a copy of that document on each person in the official service list for the project. Further, if an intervenor files comments or documents with the Commission relating to the merits of an issue that may affect the responsibilities of a particular resource agency, they must also serve a copy of the document on that resource agency.

k. *Description of Project:* The proposed project using the U.S. Army Corps of Engineers' Monongahela Lock & Dam No. 4 and operated in a run-of-river mode would consist of: (1) A new 200-foot-long, 250-foot-wide, 50-foot high concrete powerhouse; (2) a new intake channel and tailrace channel on the southwest side of the river opposite the existing lock structure; (3) four turbine/generator units with a combined installed capacity of 18.7 megawatts; (4) a new 4,900-foot-long aboveground transmission line extending from the switchyard near the powerhouse to an existing substation located southwest of the powerhouse; and (5) appurtenant facilities. The proposed Monongahela Lock & Dam No. 4 Project would have an average annual generation of 81.8 gigawatt-hours.

l. This filing is available for review at the Commission in the Public Reference Room or may be viewed on the Commission's Web site at *http://www.ferc.gov* using the ''eLibrary'' link. Enter the docket number excluding the last three digits in the docket number field to access the document. For assistance, call toll-free 1–866–208–3676 or e-mail *FERCONLINESUPPORT@FERC.GOV.* For TTY, call (202) 502–8659. A copy is also available for inspection and reproduction at the address in item h above.

m. *Competing Preliminary Permit*—Anyone desiring to file a competing application for preliminary permit for a proposed project must submit the competing application itself, or a notice of intent to file such an application, to the Commission on or before the specified comment date for the particular application (see 18 CFR 4.36). Submission of a timely notice of intent allows an interested person to file the competing preliminary permit application no later than 30 days after the specified comment date for the

particular application. A competing preliminary permit application must conform with 18 CFR 4.30 and 4.36.

n. *Competing Development Application*—Any qualified development applicant desiring to file a competing development application must submit to the Commission, on or before a specified comment date for the particular application, either a competing development application or a notice of intent to file such an application. Submission of a timely notice of intent to file a development application allows an interested person to file the competing application no later than 120 days after the specified comment date for the particular application. A competing license application must conform with 18 CFR 4.30 and 4.36.

o. *Notice of Intent*—A notice of intent must specify the exact name, business address, and telephone number of the prospective applicant, and must include an unequivocal statement of intent to submit, if such an application may be filed, either a preliminary permit application or a development application (specify which type of application). A notice of intent must be served on the applicant(s) named in this public notice.

p. *Proposed Scope of Studies Under Permit*—A preliminary permit, if issued, does not authorize construction. The term of the proposed preliminary permit would be 36 months. The work proposed under the preliminary permit would include economic analysis, preparation of preliminary engineering plans, and a study of environmental impacts. Based on the results of these studies, the Applicant would decide whether to proceed with the preparation of a development application to construct and operate the project.

q. *Comments, Protests, or Motions To Intervene*—Anyone may submit comments, a protest, or a motion to intervene in accordance with the requirements of Rules of Practice and Procedure, 18 CFR 385.210, .211, .214. In determining the appropriate action to take, the Commission will consider all protests or other comments filed, but only those who file a motion to intervene in accordance with the Commission's Rules may become a party to the proceeding. Any comments, protests, or motions to intervene must be received on or before the specified comment date for the particular application.

r. *Filing and Service of Responsive Documents*—Any filings must bear in all capital letters the title ''COMMENTS'', ''NOTICE OF INTENT TO FILE COMPETING APPLICATION'', ''COMPETING APPLICATION'', ''PROTEST'', and ''MOTION TO INTERVENE'', as applicable, and the Project Number of the particular application to which the filing refers. Any of the above-named documents must be filed by providing the original and the number of copies provided by the Commission's regulations to: The Secretary, Federal Energy Regulatory Commission, 888 First Street, NE., Washington, DC 20426. An additional copy must be sent to Director, Division of Hydropower Administration and Compliance, Federal Energy Regulatory Commission, at the above-mentioned address. A copy of any notice of intent, competing application or motion to intervene must also be served upon each representative of the Applicant specified in the particular application.

s. *Agency Comments*—Federal, State, and local agencies are invited to file comments on the described application. A copy of the application may be obtained by agencies directly from the Applicant. If an agency does not file comments within the time specified for filing comments, it will be presumed to have no comments. One copy of an agency's comments must also be sent to the Applicant's representatives.

Kimberly D. Bose,

Secretary.

[FR Doc. E7–23437 Filed 12–3–07; 8:45 am]

BILLING CODE 6717–01–P

DEPARTMENT OF ENERGY

Federal Energy Regulatory Commission

[Project No. 12907–000]

BPUS Generation Development, LLC; Notice of Application Accepted for Filing and Soliciting Motions To Intervene, Protests, and Comments

November 26, 2007.

Take notice that the following hydroelectric application has been filed with the Commission and is available for public inspection:

a. *Type of Application:* Preliminary Permit.

b. *Project No.:* 12907–000.

c. *Date filed:* July 30, 2007.

d. *Applicant:* BPUS Generation Development, LLC.

e. *Name of Project:* Jonesville Lock & Dam Hydroelectric Project.

f. *Location:* Black River in Catahoula County, Louisiana. It would use the U.S. Army Corps of Engineers' Jonesville Lock & Dam.

g. *Filed Pursuant to:* Federal Power Act, 16 U.S.C. 791(a)–825(r).

h. *Applicant Contact:* Mr. Jeffrey M. Auser, P.E., BPUS Generation Development, LLC, 225 Greenfield Parkway, Suite 201, Liverpool, NY 13088, (315) 413–2700.

i. *FERC Contact:* Robert Bell, (202) 502–4126.

j. *Deadline for filing comments, protests, and motions to intervene:* 60 days from the issuance date of this notice.

All documents (original and eight copies) should be filed with: Secretary, Federal Energy Regulatory Commission, 888 First Street, NE., Washington, DC 20426. Comments, protests, and interventions may be filed electronically via the Internet in lieu of paper; see 18 CFR 385.2001(a)(1)(iii) and the instructions on the Commission's Web site under the ''e-Filing'' link. The Commission strongly encourages electronic filings. Please include the project number (P–12907–000) on any comments or motions filed.

The Commission's Rules of Practice and Procedure require all intervenors filing documents with the Commission to serve a copy of that document on each person in the official service list for the project. Further, if an intervenor files comments or documents with the Commission relating to the merits of an issue that may affect the responsibilities of a particular resource agency, they must also serve a copy of the document on that resource agency.

k. *Description of Project:* The proposed project using the U.S. Army Corps of Engineers' Jonesville Lock & Dam and operated in a run-of-river mode would consist of: (1) A new 90-foot-long, 110-foot-wide, 40-foot-high concrete powerhouse; (2) a new intake channel and tailrace channel on the left bank of the river opposite the existing lock structure; (3) three turbine/generator units with a combined installed capacity of 6 megawatts; (4) a new 49,200-foot-long above ground transmission line extending from the switchyard near the powerhouse to an interconnection point with an existing transmission line located north-northeast of the powerhouse; and (5) appurtenant facilities. The proposed Jonesville Lock & Dam Project would have an average annual generation of 47 gigawatt-hours.

l. This filing is available for review at the Commission in the Public Reference Room or may be viewed on the Commission's Web site at *http://www.ferc.gov* using the ''eLibrary'' link. Enter the docket number excluding the last three digits in the docket number field to access the document. For assistance, call toll-free 1–866–208–3676 or e-mail

FERCONLINESUPPORT@FERC.GOV. For TTY, call (202) 502–8659. A copy is also available for inspection and reproduction at the address in item h above.

m. *Competing Preliminary Permit:* Anyone desiring to file a competing application for preliminary permit for a proposed project must submit the competing application itself, or a notice of intent to file such an application, to the Commission on or before the specified comment date for the particular application (see 18 CFR 4.36). Submission of a timely notice of intent allows an interested person to file the competing preliminary permit application no later than 30 days after the specified comment date for the particular application. A competing preliminary permit application must conform with 18 CFR 4.30 and 4.36.

n. *Competing Development Application:* Any qualified development applicant desiring to file a competing development application must submit to the Commission, on or before a specified comment date for the particular application, either a competing development application or a notice of intent to file such an application. Submission of a timely notice of intent to file a development application allows an interested person to file the competing application no later than 120 days after the specified comment date for the particular application. A competing license application must conform with 18 CFR 4.30 and 4.36.

o. *Notice of Intent:* A notice of intent must specify the exact name, business address, and telephone number of the prospective applicant, and must include an unequivocal statement of intent to submit, if such an application may be filed, either a preliminary permit application or a development application (specify which type of application). A notice of intent must be served on the applicant(s) named in this public notice.

p. *Proposed Scope of Studies Under Permit:* A preliminary permit, if issued, does not authorize construction. The term of the proposed preliminary permit would be 36 months. The work proposed under the preliminary permit would include economic analysis, preparation of preliminary engineering plans, and a study of environmental impacts. Based on the results of these studies, the Applicant would decide whether to proceed with the preparation of a development application to construct and operate the project.

q. *Comments, Protests, or Motions to Intervene:* Anyone may submit comments, a protest, or a motion to intervene in accordance with the requirements of Rules of Practice and Procedure, 18 CFR 385.210, .211, .214. In determining the appropriate action to take, the Commission will consider all protests or other comments filed, but only those who file a motion to intervene in accordance with the Commission's Rules may become a party to the proceeding. Any comments, protests, or motions to intervene must be received on or before the specified comment date for the particular application.

r. *Filing and Service of Responsive Documents:* Any filings must bear in all capital letters the title ''COMMENTS'', ''NOTICE OF INTENT TO FILE COMPETING APPLICATION'', ''COMPETING APPLICATION'', ''PROTEST'', and ''MOTION TO INTERVENE'', as applicable, and the Project Number of the particular application to which the filing refers. Any of the above-named documents must be filed by providing the original and the number of copies provided by the Commission's regulations to: The Secretary, Federal Energy Regulatory Commission, 888 First Street, NE., Washington, DC 20426. An additional copy must be sent to Director, Division of Hydropower Administration and Compliance, Federal Energy Regulatory Commission, at the above-mentioned address. A copy of any notice of intent, competing application or motion to intervene must also be served upon each representative of the Applicant specified in the particular application.

s. *Agency Comments:* Federal, State, and local agencies are invited to file comments on the described application. A copy of the application may be obtained by agencies directly from the Applicant. If an agency does not file comments within the time specified for filing comments, it will be presumed to have no comments. One copy of an agency's comments must also be sent to the Applicant's representatives.

Kimberly D. Bose,

Secretary.

[FR Doc. E7–23438 Filed 12–3–07; 8:45 am]

BILLING CODE 6717–01–P

DEPARTMENT OF ENERGY

Federal Energy Regulatory Commission

[Project No. 12908–000]

BPUS Generation Development, LLC; Notice of Application Accepted for Filing and Soliciting Motions To Intervene, Protests, and Comments

November 26, 2007.

Take notice that the following hydroelectric application has been filed with the Commission and is available for public inspection:

a. *Type of Application:* Preliminary Permit.

b. *Project No.:* 12908–000.

c. *Date filed:* July 30, 2007.

d. *Applicant:* BPUS Generation Development, LLC.

e. *Name of Project:* Mississippi Lock & Dam No. 11 Hydroelectric Project.

f. *Location:* Mississippi River in Dubuque County, Iowa. It would use the U.S. Army Corps of Engineers' Mississippi Lock & Dam No. 11.

g. *Filed Pursuant to:* Federal Power Act, 16 U.S.C. 791(a)–825(r).

h. *Applicant Contact:* Mr. Jeffrey M. Auser, P.E., BPUS Generation Development, LLC, 225 Greenfield Parkway, Suite 201, Liverpool, NY 13088, (315) 413–2700.

i. *FERC Contact:* Robert Bell, (202) 502–4126.

j. *Deadline for filing comments, protests, and motions to intervene:* 60 days from the issuance date of this notice.

All documents (original and eight copies) should be filed with: Secretary, Federal Energy Regulatory Commission, 888 First Street, NE., Washington, DC 20426. Comments, protests, and interventions may be filed electronically via the Internet in lieu of paper; see 18 CFR 385.2001(a)(1)(iii) and the instructions on the Commission's Web site under the ''e-Filing'' link. The Commission strongly encourages electronic filings. Please include the project number (P–12908–000) on any comments or motions filed.

The Commission's Rules of Practice and Procedure require all intervenors filing documents with the Commission to serve a copy of that document on each person in the official service list for the project. Further, if an intervenor files comments or documents with the Commission relating to the merits of an issue that may affect the responsibilities of a particular resource agency, they must also serve a copy of the document on that resource agency.

k. *Description of Project:* The proposed project using the U.S. Army

Corps of Engineers' Mississippi Lock & Dam No. 11 and operated in a run-of-river mode would consist of: (1) A new 125-foot-long, 160-foot-wide, 60-foot-high concrete powerhouse; (2) a new intake channel and tailrace channel in the middle of the river channel, immediately left of the gated section; (3) three turbine/generator units with a combined installed capacity of 11.5 megawatts; (4) a new 20,000-foot-long aboveground transmission line extending from the switchyard near the powerhouse to an interconnection point with an existing transmission line south of the powerhouse on the Wisconsin side of the river; and (5) appurtenant facilities. The proposed Mississippi Lock & Dam No. 11 Project would have an average annual generation of 113 gigawatt-hours.

l. This filing is available for review at the Commission in the Public Reference Room or may be viewed on the Commission's Web site at *http://www.ferc.gov* using the ''eLibrary'' link. Enter the docket number excluding the last three digits in the docket number field to access the document. For assistance, call toll-free 1–866–208–3676 or e-mail *FERCONLINESUPPORT@FERC.GOV.* For TTY, call (202) 502–8659. A copy is also available for inspection and reproduction at the address in item h above.

m. *Competing Preliminary Permit:* Anyone desiring to file a competing application for preliminary permit for a proposed project must submit the competing application itself, or a notice of intent to file such an application, to the Commission on or before the specified comment date for the particular application (see 18 CFR 4.36). Submission of a timely notice of intent allows an interested person to file the competing preliminary permit application no later than 30 days after the specified comment date for the particular application. A competing preliminary permit application must conform with 18 CFR 4.30 and 4.36.

n. *Competing Development Application:* Any qualified development applicant desiring to file a competing development application must submit to the Commission, on or before a specified comment date for the particular application, either a competing development application or a notice of intent to file such an application. Submission of a timely notice of intent to file a development application allows an interested person to file the competing application no later than 120 days after the specified comment date for the particular application. A competing license application must conform with 18 CFR 4.30 and 4.36.

o. *Notice of Intent:* A notice of intent must specify the exact name, business address, and telephone number of the prospective applicant, and must include an unequivocal statement of intent to submit, if such an application may be filed, either a preliminary permit application or a development application (specify which type of application). A notice of intent must be served on the applicant(s) named in this public notice.

p. *Proposed Scope of Studies Under Permit:* A preliminary permit, if issued, does not authorize construction. The term of the proposed preliminary permit would be 36 months. The work proposed under the preliminary permit would include economic analysis, preparation of preliminary engineering plans, and a study of environmental impacts. Based on the results of these studies, the Applicant would decide whether to proceed with the preparation of a development application to construct and operate the project.

q. *Comments, Protests, or Motions to Intervene:* Anyone may submit comments, a protest, or a motion to intervene in accordance with the requirements of Rules of Practice and Procedure, 18 CFR 385.210, .211, .214. In determining the appropriate action to take, the Commission will consider all protests or other comments filed, but only those who file a motion to intervene in accordance with the Commission's Rules may become a party to the proceeding. Any comments, protests, or motions to intervene must be received on or before the specified comment date for the particular application.

r. *Filing and Service of Responsive Documents:* Any filings must bear in all capital letters the title ''COMMENTS'', ''NOTICE OF INTENT TO FILE COMPETING APPLICATION'', ''COMPETING APPLICATION'', ''PROTEST'', and ''MOTION TO INTERVENE'', as applicable, and the Project Number of the particular application to which the filing refers. Any of the above-named documents must be filed by providing the original and the number of copies provided by the Commission's regulations to: The Secretary, Federal Energy Regulatory Commission, 888 First Street, NE., Washington, DC 20426. An additional copy must be sent to Director, Division of Hydropower Administration and Compliance, Federal Energy Regulatory Commission, at the above-mentioned address. A copy of any notice of intent, competing application or motion to intervene must also be served upon each representative of the Applicant specified in the particular application.

s. *Agency Comments:* Federal, State, and local agencies are invited to file comments on the described application. A copy of the application may be obtained by agencies directly from the Applicant. If an agency does not file comments within the time specified for filing comments, it will be presumed to have no comments. One copy of an agency's comments must also be sent to the Applicant's representatives.

Kimberly D. Bose,

Secretary.

[FR Doc. E7–23439 Filed 12–3–07; 8:45 am]

BILLING CODE 6717–01–P

DEPARTMENT OF ENERGY

Federal Energy Regulatory Commission

[Project No. 12909–000]

BPUS Generation Development, LLC; Notice of Application Accepted for Filing and Soliciting Motions To Intervene, Protests, and Comments

November 26, 2007.

Take notice that the following hydroelectric application has been filed with the Commission and is available for public inspection:

a. *Type of Application:* Preliminary Permit.

b. *Project No.:* 12909–000.

c. *Date filed:* July 30, 2007.

d. *Applicant:* BPUS Generation Development, LLC.

e. *Name of Project:* Mississippi Lock & Dam No. 12 Hydroelectric Project.

f. *Location:* Mississippi River in Jackson County, Iowa. It would use the U.S. Army Corps of Engineers' Mississippi Lock & Dam No. 12.

g. *Filed Pursuant to:* Federal Power Act, 16 U.S.C. 791(a)—825(r).

h. *Applicant Contact:* Mr. Jeffrey M. Auser, P.E., BPUS Generation Development, LLC, 225 Greenfield Parkway, Suite 201, Liverpool, NY 13088, (315) 413–2700.

i. *FERC Contact:* Robert Bell, (202) 502–4126.

j. *Deadline for filing comments, protests, and motions to intervene:* 60 days from the issuance date of this notice.

All documents (original and eight copies) should be filed with: Secretary, Federal Energy Regulatory Commission, 888 First Street, NE., Washington, DC 20426. Comments, protests, and interventions may be filed electronically via the Internet in lieu of paper; see 18 CFR 385.2001(a)(1)(iii) and the

instructions on the Commission's Web site under the ''e-Filing'' link. The Commission strongly encourages electronic filings. Please include the project number (P–12909–000) on any comments or motions filed.

The Commission's Rules of Practice and Procedure require all intervenors filing documents with the Commission to serve a copy of that document on each person in the official service list for the project. Further, if an intervenor files comments or documents with the Commission relating to the merits of an issue that may affect the responsibilities of a particular resource agency, they must also serve a copy of the document on that resource agency.

k. *Description of Project:* The proposed project using the U.S. Army Corps of Engineers' Mississippi Lock & Dam No. 12 and operated in a run-of-river mode would consist of: (1) A new 125-foot long, 160-foot wide, 60-foot high concrete powerhouse; (2) a new intake channel and tailrace channel in the middle of the river channel where the existing levee and concrete structure of the Corps' facility intersect; (3) three turbine/generator units with a combined installed capacity of 11.5 megawatts; (4) a new 30,000-foot long above ground transmission line extending from the switchyard near the powerhouse to an interconnection point with an existing transmission line east of the powerhouse on the Illinois side of the river; and (5) appurtenant facilities. The proposed Mississippi Lock & Dam No. 12 Project would have an average annual generation of 118 gigawatt-hours.

l. This filing is available for review at the Commission in the Public Reference Room or may be viewed on the Commission's Web site at *http://www.ferc.gov* using the ''eLibrary'' link. Enter the docket number excluding the last three digits in the docket number field to access the document. For assistance, call toll-free 1–866–208–3676 or e-mail *FERCONLINESUPPORT@FERC.GOV*. For TTY, call (202) 502–8659. A copy is also available for inspection and reproduction at the address in item h above.

m. *Competing Preliminary Permit*—Anyone desiring to file a competing application for preliminary permit for a proposed project must submit the competing application itself, or a notice of intent to file such an application, to the Commission on or before the specified comment date for the particular application (see 18 CFR 4.36). Submission of a timely notice of intent allows an interested person to file the competing preliminary permit application no later than 30 days after the specified comment date for the particular application. A competing preliminary permit application must conform with 18 CFR 4.30 and 4.36.

n. *Competing Development Application*—Any qualified development applicant desiring to file a competing development application must submit to the Commission, on or before a specified comment date for the particular application, either a competing development application or a notice of intent to file such an application. Submission of a timely notice of intent to file a development application allows an interested person to file the competing application no later than 120 days after the specified comment date for the particular application. A competing license application must conform with 18 CFR 4.30 and 4.36.

o. *Notice of Intent*—A notice of intent must specify the exact name, business address, and telephone number of the prospective applicant, and must include an unequivocal statement of intent to submit, if such an application may be filed, either a preliminary permit application or a development application (specify which type of application). A notice of intent must be served on the applicant(s) named in this public notice.

p. *Proposed Scope of Studies Under Permit*—A preliminary permit, if issued, does not authorize construction. The term of the proposed preliminary permit would be 36 months. The work proposed under the preliminary permit would include economic analysis, preparation of preliminary engineering plans, and a study of environmental impacts. Based on the results of these studies, the Applicant would decide whether to proceed with the preparation of a development application to construct and operate the project.

q. *Comments, Protests, or Motions To Intervene*—Anyone may submit comments, a protest, or a motion to intervene in accordance with the requirements of Rules of Practice and Procedure, 18 CFR 385.210, .211, .214. In determining the appropriate action to take, the Commission will consider all protests or other comments filed, but only those who file a motion to intervene in accordance with the Commission's Rules may become a party to the proceeding. Any comments, protests, or motions to intervene must be received on or before the specified comment date for the particular application.

r. *Filing and Service of Responsive Documents*—Any filings must bear in all capital letters the title ''COMMENTS'', ''NOTICE OF INTENT TO FILE COMPETING APPLICATION'', ''COMPETING APPLICATION'', ''PROTEST'', and ''MOTION TO INTERVENE'', as applicable, and the Project Number of the particular application to which the filing refers. Any of the above-named documents must be filed by providing the original and the number of copies provided by the Commission's regulations to: The Secretary, Federal Energy Regulatory Commission, 888 First Street, NE., Washington, DC 20426. An additional copy must be sent to Director, Division of Hydropower Administration and Compliance, Federal Energy Regulatory Commission, at the above-mentioned address. A copy of any notice of intent, competing application or motion to intervene must also be served upon each representative of the Applicant specified in the particular application.

s. *Agency Comments*—Federal, state, and local agencies are invited to file comments on the described application. A copy of the application may be obtained by agencies directly from the Applicant. If an agency does not file comments within the time specified for filing comments, it will be presumed to have no comments. One copy of an agency's comments must also be sent to the Applicant's representatives.

Kimberly D. Bose,

Secretary.

[FR Doc. E7–23440 Filed 12–3–07; 8:45 am]

BILLING CODE 6717–01–P

DEPARTMENT OF ENERGY

Federal Energy Regulatory Commission

[Project No. 12910–000]

BPUS Generation Development, LLC; Notice of Application Accepted for Filing and Soliciting Motions To Intervene, Protests, and Comments

November 26, 2007.

Take notice that the following hydroelectric application has been filed with the Commission and is available for public inspection:

a. *Type of Application:* Preliminary Permit.

b. *Project No.:* 12910–000.

c. *Date filed:* July 30, 2007.

d. *Applicant:* BPUS Generation Development, LLC.

e. *Name of Project:* Maxwell Lock & Dam Hydroelectric Project.

f. *Location:* Monongahela River in Washington and Fayette counties, Pennsylvania. It would use the U.S. Army Corps of Engineers' Maxwell Lock & Dam.

g. *Filed Pursuant to:* Federal Power Act, 16 U.S.C. 791(a)–825(r).

h. *Applicant Contact:* Mr. Jeffrey M. Auser, P.E., BPUS Generation Development, LLC, 225 Greenfield Parkway, Suite 201, Liverpool, NY 13088, (315) 413–2700.

i. *FERC Contact:* Robert Bell, (202) 502–4126.

j. *Deadline for filing comments, protests, and motions to intervene:* 60 days from the issuance date of this notice.

All documents (original and eight copies) should be filed with: Secretary, Federal Energy Regulatory Commission, 888 First Street, NE., Washington, DC 20426. Comments, protests, and interventions may be filed electronically via the Internet in lieu of paper; see 18 CFR 385.2001(a)(1)(iii) and the instructions on the Commission's Web site under the ''e-Filing'' link. The Commission strongly encourages electronic filings. Please include the project number (P–12910–000) on any comments or motions filed.

The Commission's Rules of Practice and Procedure require all intervenors filing documents with the Commission to serve a copy of that document on each person in the official service list for the project. Further, if an intervenor files comments or documents with the Commission relating to the merits of an issue that may affect the responsibilities of a particular resource agency, they must also serve a copy of the document on that resource agency.

k. *Description of Project:* The proposed project using the U.S. Army Corps of Engineers' Maxwell Lock & Dam and operated in a run-of-river mode would consist of: (1) A new 60-foot long, 110-foot wide, 40-foot high concrete powerhouse; (2) a new intake channel and tailrace channel in the last spillway bay on the east side of the river; (3) two turbine/generator units with a combined installed capacity of 10 megawatts; (4) a new 13,100-foot long above ground transmission line extending from the switchyard near the powerhouse to an interconnection point with an existing transmission line located northeast of the powerhouse; and (5) appurtenant facilities. The proposed Maxwell Lock & Dam Project would have an average annual generation of 71.6 gigawatt-hours.

l. This filing is available for review at the Commission in the Public Reference Room or may be viewed on the Commission's Web site at *http://www.ferc.gov* using the ''eLibrary'' link. Enter the docket number excluding the last three digits in the docket number field to access the document. For assistance, call toll-free 1–866–208–3676 or e-mail *FERCOnlineSupport@ferc.gov.* For TTY, call (202) 502–8659. A copy is also available for inspection and reproduction at the address in item h above.

m. *Competing Preliminary Permit:* Anyone desiring to file a competing application for preliminary permit for a proposed project must submit the competing application itself, or a notice of intent to file such an application, to the Commission on or before the specified comment date for the particular application (see 18 CFR 4.36). Submission of a timely notice of intent allows an interested person to file the competing preliminary permit application no later than 30 days after the specified comment date for the particular application. A competing preliminary permit application must conform with 18 CFR 4.30 and 4.36.

n. *Competing Development Application:* Any qualified development applicant desiring to file a competing development application must submit to the Commission, on or before a specified comment date for the particular application, either a competing development application or a notice of intent to file such an application. Submission of a timely notice of intent to file a development application allows an interested person to file the competing application no later than 120 days after the specified comment date for the particular application. A competing license application must conform with 18 CFR 4.30 and 4.36.

o. *Notice of Intent:* A notice of intent must specify the exact name, business address, and telephone number of the prospective applicant, and must include an unequivocal statement of intent to submit, if such an application may be filed, either a preliminary permit application or a development application (specify which type of application). A notice of intent must be served on the applicant(s) named in this public notice.

p. *Proposed Scope of Studies Under Permit:* A preliminary permit, if issued, does not authorize construction. The term of the proposed preliminary permit would be 36 months. The work proposed under the preliminary permit would include economic analysis, preparation of preliminary engineering plans, and a study of environmental impacts. Based on the results of these studies, the Applicant would decide whether to proceed with the preparation of a development application to construct and operate the project.

q. *Comments, Protests, or Motions To Intervene:* Anyone may submit comments, a protest, or a motion to intervene in accordance with the requirements of Rules of Practice and Procedure, 18 CFR 385.210, .211, .214. In determining the appropriate action to take, the Commission will consider all protests or other comments filed, but only those who file a motion to intervene in accordance with the Commission's Rules may become a party to the proceeding. Any comments, protests, or motions to intervene must be received on or before the specified comment date for the particular application.

r. *Filing and Service of Responsive Documents:* Any filings must bear in all capital letters the title ''COMMENTS'', ''NOTICE OF INTENT TO FILE COMPETING APPLICATION'', ''COMPETING APPLICATION'', ''PROTEST'', and ''MOTION TO INTERVENE'', as applicable, and the Project Number of the particular application to which the filing refers. Any of the above-named documents must be filed by providing the original and the number of copies provided by the Commission's regulations to: The Secretary, Federal Energy Regulatory Commission, 888 First Street, NE., Washington, DC 20426. An additional copy must be sent to Director, Division of Hydropower Administration and Compliance, Federal Energy Regulatory Commission, at the above-mentioned address. A copy of any notice of intent, competing application or motion to intervene must also be served upon each representative of the Applicant specified in the particular application.

s. *Agency Comments:* Federal, State, and local agencies are invited to file comments on the described application. A copy of the application may be obtained by agencies directly from the Applicant. If an agency does not file comments within the time specified for filing comments, it will be presumed to have no comments. One copy of an agency's comments must also be sent to the Applicant's representatives.

Kimberly D. Bose,

Secretary.

[FR Doc. E7–23441 Filed 12–3–07; 8:45 am]

BILLING CODE 6717–01–P

DEPARTMENT OF ENERGY

Federal Energy Regulatory Commission

[Project No. 12919–000]

FFP Project 36, LLC; Notice of Application Accepted for Filing and Soliciting Motions To Intervene, Protests, and Comments

November 26, 2007.

Take notice that the following hydroelectric application has been filed with the Commission and is available for public inspection:

a. *Type of Application:* Preliminary Permit.

b. *Project No.:* 12919–000.

c. *Date Filed:* August 6, 2007.

d. *Applicant:* FFP Project 36, LLC.

e. *Name of Project:* Cat Island Project.

f. *Location:* The project would be located in a section of the Mississippi River in Issaquena County, Mississippi and East Carroll Parish, Louisiana. The project uses no dam or impoundment.

g. *Filed Pursuant to:* Federal Power Act, 16 U.S.C. 791(a)–825(r).

h. *Applicant Contacts:* Mr. Daniel Irvin, FFP Project 36, LLC, 69 Bridge Street, Manchester, MA 01944, phone (978) 232–3536, and Ms. Maureen Winters, Project Manager, Devine Tarbell & Associates, 970 Baxter Boulevard, Portland, ME 04103, phone (207) 775–4495.

i. *FERC Contact:* Kelly Houff, (202) 502–6393.

j. *Deadline for filing comments, protests, and motions to intervene:* 60 days from the issuance date of this notice.

All documents (original and eight copies) should be filed with: Secretary, Federal Energy Regulatory Commission, 888 First Street, NE., Washington, DC 20426. Comments, protests, and interventions may be filed electronically via the Internet in lieu of paper; see 18 CFR 385.2001(a)(1)(iii) and the instructions on the Commission's Web site under the ''e-Filing'' link. The Commission strongly encourages electronic filings. Please include the project number (P–12919–000) on any comments or motions filed.

The Commission's Rules of Practice and Procedure require all intervenors filing documents with the Commission to serve a copy of that document on each person in the official service list for the project. Further, if an intervenor files comments or documents with the Commission relating to the merits of an issue that may affect the responsibilities of a particular resource agency, they must also serve a copy of the document on that resource agency.

k. *Description of Project:* The proposed project consists of: (1) 2,800 proposed 20 kilowatt Free Flow generating units having a total installed capacity of 56 megawatts, (2) a proposed transmission line, (3) a mooring system comprised of either free standing pilings or existing infrastructure which will anchor the units, and (4) appurtenant facilities. The FFP Project 36, LLC, project would have an average annual generation of 245.280 gigawatt-hours and be sold to a local utility.

l. *Locations of Applications:* A copy of the application is available for inspection and reproduction at the Commission in the Public Reference Room, located at 888 First Street, NE., Room 2A, Washington, DC 20426, or by calling (202) 502–8371. This filing may also be viewed on the Commission's Web site at *http://www.ferc.gov* using the ''eLibrary'' link. Enter the docket number excluding the last three digits in the docket number field to access the document. For assistance, call toll-free 1–866–208–3676 or e-mail *FERCOnlineSupport@ferc.gov.* For TTY, call (202) 502–8659. A copy is also available for inspection and reproduction at the address in item h above.

m. Individuals desiring to be included on the Commission's mailing list should so indicate by writing to the Secretary of the Commission.

n. *Competing Preliminary Permit:* Anyone desiring to file a competing application for preliminary permit for a proposed project must submit the competing application itself, or a notice of intent to file such an application, to the Commission on or before the specified comment date for the particular application (see 18 CFR 4.36). Submission of a timely notice of intent allows an interested person to file the competing preliminary permit application no later than 30 days after the specified comment date for the particular application. A competing preliminary permit application must conform with 18 CFR 4.30 and 4.36.

o. *Competing Development Application:* Any qualified development applicant desiring to file a competing development application must submit to the Commission, on or before a specified comment date for the particular application, either a competing development application or a notice of intent to file such an application. Submission of a timely notice of intent to file a development application allows an interested person to file the competing application no later than 120 days after the specified comment date for the particular application. A competing license application must conform with 18 CFR 4.30 and 4.36.

p. *Notice of Intent:* A notice of intent must specify the exact name, business address, and telephone number of the prospective applicant, and must include an unequivocal statement of intent to submit, if such an application may be filed, either a preliminary permit application or a development application (specify which type of application). A notice of intent must be served on the applicant(s) named in this public notice.

q. *Proposed Scope of Studies Under Permit:* A preliminary permit, if issued, does not authorize construction. The term of the proposed preliminary permit would be 36 months. The work proposed under the preliminary permit would include economic analysis, preparation of preliminary engineering plans, and a study of environmental impacts. Based on the results of these studies, the Applicant would decide whether to proceed with the preparation of a development application to construct and operate the project.

r. *Comments, Protests, or Motions To Intervene:* Anyone may submit comments, a protest, or a motion to intervene in accordance with the requirements of Rules of Practice and Procedure, 18 CFR 385.210, .211, .214. In determining the appropriate action to take, the Commission will consider all protests or other comments filed, but only those who file a motion to intervene in accordance with the Commission's Rules may become a party to the proceeding. Any comments, protests, or motions to intervene must be received on or before the specified comment date for the particular application.

Comments, protests and interventions may be filed electronically via the Internet in lieu of paper; see 18 CFR 385.2001(a)(1)(iii) and the instructions on the Commission's Web site under ''e-filing'' link. The Commission strongly encourages electronic filing.

s. *Filing and Service of Responsive Documents:* Any filings must bear in all capital letters the title ''COMMENTS'', ''RECOMMENDATIONS FOR TERMS AND CONDITIONS'', ''PROTEST'', ''COMPETING APPLICATION'' OR ''MOTION TO INTERVENE'', as applicable, and the Project Number of the particular application to which the filing refers. Any of the above-named documents must be filed by providing the original and the number of copies provided by the Commission's regulations to: The Secretary, Federal Energy Regulatory Commission, 888 First Street, NE., Washington, DC 20426. A copy of any motion to intervene must

also be served upon each representative of the Applicant specified in the particular application.

t. *Agency Comments:* Federal, State, and local agencies are invited to file comments on the described application. A copy of the application may be obtained by agencies directly from the Applicant. If an agency does not file comments within the time specified for filing comments, it will be presumed to have no comments. One copy of an agency's comments must also be sent to the Applicant's representatives.

Kimberly D. Bose,

Secretary.

[FR Doc. E7–23442 Filed 12–3–07; 8:45 am]

BILLING CODE 6717–01–P

DEPARTMENT OF ENERGY

Federal Energy Regulatory Commission

[Project No. 12921–000]

FFP Project 32, LLC; Notice of Application Accepted for Filing and Soliciting Motions To Intervene, Protests, and Comments

November 26, 2007.

Take notice that the following hydroelectric application has been filed with the Commission and is available for public inspection:

a. *Type of Application:* Preliminary Permit.

b. *Project No.:* 12921–000.

c. *Date Filed:* August 6, 2007.

d. *Applicant:* FFP Project 32, LLC.

e. *Name of Project:* Kempe Bend Project.

f. *Location:* The project would be located in a section of the Mississippi River in Jefferson County, Mississippi and Tensas Parish, Louisiana. The project uses no dam or impoundment.

g. *Filed Pursuant to:* Federal Power Act, 16 U.S.C. 791(a)–825(r).

h. *Applicant Contacts:* Mr. Daniel Irvin, FFP Project 32, LLC, 69 Bridge Street, Manchester, MA 01944, phone (978) 232–3536, and Ms. Maureen Winters, Project Manager, Devine Tarbell & Associates, 970 Baxter Boulevard, Portland, ME 04103, phone (207) 775–4495.

i. *FERC Contact:* Kelly Houff, (202) 502–6393.

j. *Deadline for filing comments, protests, and motions to intervene:* 60 days from the issuance date of this notice.

All documents (original and eight copies) should be filed with: Secretary, Federal Energy Regulatory Commission, 888 First Street, NE., Washington, DC 20426. Comments, protests, and interventions may be filed electronically via the Internet in lieu of paper; see 18 CFR 385.2001(a)(1)(iii) and the instructions on the Commission's Web site under the ''e-Filing'' link. The Commission strongly encourages electronic filings. Please include the project number (P–12921–000) on any comments or motions filed.

The Commission's Rules of Practice and Procedure require all intervenors filing documents with the Commission to serve a copy of that document on each person in the official service list for the project. Further, if an intervenor files comments or documents with the Commission relating to the merits of an issue that may affect the responsibilities of a particular resource agency, they must also serve a copy of the document on that resource agency.

k. *Description of Project:* The proposed project consists of: (1) 2,700 proposed 20 kilowatt Free Flow generating units having a total installed capacity of 54 megawatts, (2) a proposed transmission line, (3) a mooring system comprised of either free standing pilings or existing infrastructure which will anchor the units, and (4) appurtenant facilities. The FFP Project 32, LLC, project would have an average annual generation of 236.520 gigawatt-hours and be sold to a local utility.

l. *Locations of Applications:* A copy of the application is available for inspection and reproduction at the Commission in the Public Reference Room, located at 888 First Street, NE., Room 2A, Washington, DC 20426, or by calling (202) 502–8371. This filing may also be viewed on the Commission's Web site at *http://www.ferc.gov* using the ''eLibrary'' link. Enter the docket number excluding the last three digits in the docket number field to access the document. For assistance, call toll-free 1–866–208–3676 or e-mail *FERCOnlineSupport@ferc.gov.* For TTY, call (202) 502–8659. A copy is also available for inspection and reproduction at the address in item h above.

m. Individuals desiring to be included on the Commission's mailing list should so indicate by writing to the Secretary of the Commission.

n. *Competing Preliminary Permit:* Anyone desiring to file a competing application for preliminary permit for a proposed project must submit the competing application itself, or a notice of intent to file such an application, to the Commission on or before the specified comment date for the particular application (see 18 CFR 4.36). Submission of a timely notice of intent allows an interested person to file the competing preliminary permit application no later than 30 days after the specified comment date for the particular application. A competing preliminary permit application must conform with 18 CFR 4.30 and 4.36.

o. *Competing Development Application:* Any qualified development applicant desiring to file a competing development application must submit to the Commission, on or before a specified comment date for the particular application, either a competing development application or a notice of intent to file such an application. Submission of a timely notice of intent to file a development application allows an interested person to file the competing application no later than 120 days after the specified comment date for the particular application. A competing license application must conform with 18 CFR 4.30 and 4.36.

p. *Notice of Intent:* A notice of intent must specify the exact name, business address, and telephone number of the prospective applicant, and must include an unequivocal statement of intent to submit, if such an application may be filed, either a preliminary permit application or a development application (specify which type of application). A notice of intent must be served on the applicant(s) named in this public notice.

q. *Proposed Scope of Studies Under Permit:* A preliminary permit, if issued, does not authorize construction. The term of the proposed preliminary permit would be 36 months. The work proposed under the preliminary permit would include economic analysis, preparation of preliminary engineering plans, and a study of environmental impacts. Based on the results of these studies, the Applicant would decide whether to proceed with the preparation of a development application to construct and operate the project.

r. *Comments, Protests, or Motions To Intervene:* Anyone may submit comments, a protest, or a motion to intervene in accordance with the requirements of Rules of Practice and Procedure, 18 CFR 385.210, .211, .214. In determining the appropriate action to take, the Commission will consider all protests or other comments filed, but only those who file a motion to intervene in accordance with the Commission's Rules may become a party to the proceeding. Any comments, protests, or motions to intervene must be received on or before the specified comment date for the particular application.

Comments, protests and interventions may be filed electronically via the

Internet in lieu of paper; see 18 CFR 385.2001(a)(1)(iii) and the instructions on the Commission's Web site under ''e-filing'' link. The Commission strongly encourages electronic filing.

s. *Filing and Service of Responsive Documents:* Any filings must bear in all capital letters the title ''COMMENTS'', ''RECOMMENDATIONS FOR TERMS AND CONDITIONS'', ''PROTEST'',''COMPETING APPLICATION'' OR ''MOTION TO INTERVENE'', as applicable, and the Project Number of the particular application to which the filing refers. Any of the above-named documents must be filed by providing the original and the number of copies provided by the Commission's regulations to: The Secretary, Federal Energy Regulatory Commission, 888 First Street, NE., Washington, DC 20426. A copy of any motion to intervene must also be served upon each representative of the Applicant specified in the particular application.

t. *Agency Comments:* Federal, State, and local agencies are invited to file comments on the described application. A copy of the application may be obtained by agencies directly from the Applicant. If an agency does not file comments within the time specified for filing comments, it will be presumed to have no comments. One copy of an agency's comments must also be sent to the Applicant's representatives.

Kimberly D. Bose,

Secretary.

[FR Doc. E7–23443 Filed 12–3–07; 8:45 am]

BILLING CODE 6717–01–P

DEPARTMENT OF ENERGY

Federal Energy Regulatory Commission

[Project No. 12922–000]

FFP Project 35, LLC; Notice of Application Accepted for Filing and Soliciting Motions To Intervene, Protests, and Comments

November 26, 2007.

Take notice that the following hydroelectric application has been filed with the Commission and is available for public inspection:

a. *Type of Application:* Preliminary Permit.

b. *Project No.:* 12922–000.

c. *Date filed:* August 6, 2007.

d. *Applicant:* FFP Project 35, LLC.

e. *Name of Project:* Milliken Bend Project.

f. *Location:* The project would be located in a section of the Mississippi River in Warren County, Mississippi as well as Madison and East Carroll Parishes, Louisiana. The project uses no dam or impoundment.

g. *Filed Pursuant to:* Federal Power Act, 16 U.S.C. 791(a)—825(r).

h. *Applicant Contacts:* Mr. Daniel Irvin, FFP Project 35, LLC, 69 Bridge Street, Manchester, MA 01944, phone (978) 232–3536, and Ms. Maureen Winters, Project Manager, Devine Tarbell & Associates, 970 Baxter Boulevard, Portland, ME 04103, phone (207) 775–4495.

i. *FERC Contact:* Kelly Houff, (202) 502–6393.

j. *Deadline for filing comments, protests, and motions to intervene:* 60 days from the issuance date of this notice.

All documents (original and eight copies) should be filed with: Secretary, Federal Energy Regulatory Commission, 888 First Street, NE., Washington, DC 20426. Comments, protests, and interventions may be filed electronically via the Internet in lieu of paper; see 18 CFR 385.2001(a)(1)(iii) and the instructions on the Commission's Web site under the ''e-Filing'' link. The Commission strongly encourages electronic filings. Please include the project number (P–12922–000) on any comments or motions filed.

The Commission's Rules of Practice and Procedure require all intervenors filing documents with the Commission to serve a copy of that document on each person in the official service list for the project. Further, if an intervenor files comments or documents with the Commission relating to the merits of an issue that may affect the responsibilities of a particular resource agency, they must also serve a copy of the document on that resource agency.

k. *Description of Project:* The proposed project consists of: (1) 5,000 proposed 20 kilowatt Free Flow generating units having a total installed capacity of 100 megawatts, (2) a proposed transmission line, (3) a mooring system comprised of either free standing pilings or existing infrastructure which will anchor the units, and (4) appurtenant facilities. The FFP Project 35, LLC, project would have an average annual generation of 438.000 gigawatt-hours and be sold to a local utility.

l. *Locations of Applications:* A copy of the application is available for inspection and reproduction at the Commission in the Public Reference Room, located at 888 First Street NE., Room 2A, Washington DC 20426, or by calling (202) 502–8371. This filing may also be viewed on the Commission's Web site at *http://www.ferc.gov* using the ''eLibrary'' link. Enter the docket number excluding the last three digits in the docket number field to access the document. For assistance, call toll-free 1–866–208–3676 or e-mail *FERCOnlineSupport@ferc.gov.* For TTY, call (202) 502–8659. A copy is also available for inspection and reproduction at the address in item h above.

m. Individuals desiring to be included on the Commission's mailing list should so indicate by writing to the Secretary of the Commission.

n. *Competing Preliminary Permit*—Anyone desiring to file a competing application for preliminary permit for a proposed project must submit the competing application itself, or a notice of intent to file such an application, to the Commission on or before the specified comment date for the particular application (see 18 CFR 4.36). Submission of a timely notice of intent allows an interested person to file the competing preliminary permit application no later than 30 days after the specified comment date for the particular application. A competing preliminary permit application must conform with 18 CFR 4.30 and 4.36.

o. *Competing Development Application*—Any qualified development applicant desiring to file a competing development application must submit to the Commission, on or before a specified comment date for the particular application, either a competing development application or a notice of intent to file such an application. Submission of a timely notice of intent to file a development application allows an interested person to file the competing application no later than 120 days after the specified comment date for the particular application. A competing license application must conform with 18 CFR 4.30 and 4.36.

p. *Notice of Intent*—A notice of intent must specify the exact name, business address, and telephone number of the prospective applicant, and must include an unequivocal statement of intent to submit, if such an application may be filed, either a preliminary permit application or a development application (specify which type of application). A notice of intent must be served on the applicant(s) named in this public notice.

q. *Proposed Scope of Studies under Permit*—A preliminary permit, if issued, does not authorize construction. The term of the proposed preliminary permit would be 36 months. The work proposed under the preliminary permit would include economic analysis, preparation of preliminary engineering

plans, and a study of environmental impacts. Based on the results of these studies, the Applicant would decide whether to proceed with the preparation of a development application to construct and operate the project.

r. *Comments, Protests, or Motions To Intervene*—Anyone may submit comments, a protest, or a motion to intervene in accordance with the requirements of Rules of Practice and Procedure, 18 CFR 385.210, .211, .214. In determining the appropriate action to take, the Commission will consider all protests or other comments filed, but only those who file a motion to intervene in accordance with the Commission's Rules may become a party to the proceeding. Any comments, protests, or motions to intervene must be received on or before the specified comment date for the particular application.

Comments, protests and interventions may be filed electronically via the Internet in lieu of paper; See 18 CFR 385.2001 (a)(1)(iii) and the instructions on the Commission's Web site under ''e-filing'' link. The Commission strongly encourages electronic filing.

s. *Filing and Service of Responsive Documents*—Any filings must bear in all capital letters the title ''COMMENTS'', ''RECOMMENDATIONS FOR TERMS AND CONDITIONS'', ''PROTEST'', ''COMPETING APPLICATION'' OR ''MOTION TO INTERVENE'', as applicable, and the Project Number of the particular application to which the filing refers. Any of the above-named documents must be filed by providing the original and the number of copies provided by the Commission's regulations to: The Secretary, Federal Energy Regulatory Commission, 888 First Street, NE., Washington, DC 20426. A copy of any motion to intervene must also be served upon each representative of the Applicant specified in the particular application.

t. *Agency Comments*—Federal, state, and local agencies are invited to file comments on the described application. A copy of the application may be obtained by agencies directly from the Applicant. If an agency does not file comments within the time specified for filing comments, it will be presumed to have no comments. One copy of an agency's comments must also be sent to the Applicant's representatives.

Kimberly D. Bose,

Secretary.

[FR Doc. E7–23444 Filed 12–3–07; 8:45 am]

BILLING CODE 6717–01–P

DEPARTMENT OF ENERGY

Federal Energy Regulatory Commission

[Project No.: 2677–019]

City of Kaukauna, WI; Notice of Application Accepted for Filing and Soliciting Motions To Intervene and Protests

November 27, 2007.

Take notice that the following hydroelectric application has been filed with the Commission and is available for public inspection.

a. *Type of Application:* New Major License.

b. *Project No.:* 2677–019.

c. *Date filed:* August 29, 2007.

d. *Applicant:* City of Kaukauna, Wisconsin.

e. *Name of Project:* Badger-Rapide Croche Hydroelectric Project.

f. *Location:* On the Fox River in Outagamie County, near the city of Kaukauna, Wisconsin. The project does not affect federal lands.

g. *Filed Pursuant to:* Federal Power Act, 16 U.S.C. 791 (a)–825(r).

h. *Applicant Contact:* Mike Pedersen, Kaukauna Utilities, 777 Island Street, P.O. Box 1777, Kaukauna, WI 54130–7077, 920–462–0220, or Arie DeWaal, Mead & Hunt, Inc., 6501 Watts Road, Madison, WI 53719, 608–273–6380.

i. *FERC Contact:* John Smith (202) 502–8972 or *john.smith@ferc.gov.*

j. *Deadline for filing motions to intervene and protests:* 60 days from the issuance date of this notice.

All documents (original and eight copies) should be filed with: Kimberly D. Bose, Secretary, Federal Energy Regulatory Commission, 888 First Street, NE., Washington, DC 20426.

The Commission's Rules of Practice require all intervenors filing documents with the Commission to serve a copy of that document on each person on the official service list for the project. Further, if an intervenor files comments or documents with the Commission relating to the merits of an issue that may affect the responsibilities of a particular resource agency, they must also serve a copy of the document on that resource agency.

Motions to intervene and protests may be filed electronically via the Internet in lieu of paper. The Commission strongly encourages electronic filings. See 18 CFR 385.2001(a)(1)(iii) and the instructions on the Commission's Web site (*http://www.ferc.gov*) under the ''e-Filing'' link.

k. This application has been accepted, but is not ready for environmental analysis at this time.

l. The existing project works consists of the following two developments:

As licensed, the existing Badger Development utilizes the head created by the 22-foot-high Army Corps of Engineers (Corps) Kaukauna dam and consists of: (1) A 2,100-foot-long, 100-foot-wide power canal that bifurcates into a 260-foot-long, 200-foot-wide canal and a 250-foot-long, 80-foot-wide canal leading to; (2) the Old Badger powerhouse containing two 1,000-kilowatt (kW) generating units for a total installed capacity of 2,000 kW; and (3) the New Badger powerhouse containing two 1,800-kilowatt (kW) generating units for a total installed capacity of 3,600 kW; and (4) appurtenant facilities.

As licensed, the existing Rapide Croche Development utilizes the head created by the 20-foot-high Corps Rapide Croche dam, located approximately 4.5 miles downstream from the Badger Development and consists of: (1) A powerhouse, located on the south end of the dam, containing four 600-kW generating units for a total installed capacity of 2,400 kW; (2) the 5-mile-long, 12-kV transmission line; and (3) appurtenant facilities.

The license application also indicates that flashboards are used at the Kaukauna (6-inch-high) and Rapide-Croche (30-inch-high) dams to provide additional head for project generation.

The proposed project would include decommissioning the Old Badger and New Badger plants and constructing a new 7–MW powerhouse about 150 feet upstream from the existing New Badger plant site. Proposed project works would consist of: (1) A modified power canal leading to; (2) a new powerhouse with integral intake; and (3) two identical 3.5– to 3.6–MW horizontal Kaplan ''S'' type turbines. The Old Badger development would be converted to an alternative use. The New Badger development would be decommissioned, demolished, and removed. The existing service road would be demolished and removed. The tailrace area associated with the existing Old Badger development would be filled with soil. A new service road would be constructed over the filled area. No significant changes are proposed for the Rapide Croche development.

The existing Badger and Rapide Croche developments currently operate in run-of-river mode and as proposed, the new project would continue to operate in a run-of-river mode.

m. A copy of the application is available for review at the Commission in the Public Reference Room or may be viewed on the Commission's Web site at *http://www.ferc.gov* using the

''eLibrary'' link. Enter the docket number excluding the last three digits in the docket number field to access the document. For assistance, contact FERC Online Support at *FERCOnlineSupport@ferc.gov* or toll-free at 1–866–208–3676, or for TTY, (202) 502–8659. A copy is also available for inspection and reproduction at the address in item h above.

You may also register online at *http://www.ferc.gov/docs-filing/esubscription.asp* to be notified via e-mail of new filings and issuances related to this or other pending projects. For assistance, contact FERC Online Support.

n. Anyone may submit a protest or a motion to intervene in accordance with the requirements of Rules of Practice and Procedure, 18 CFR 385.210, 385.211, and 385.214. In determining the appropriate action to take, the Commission will consider all protests filed, but only those who file a motion to intervene in accordance with the Commission's Rules may become a party to the proceeding. Any protests or motions to intervene must be received on or before the specified deadline date for the particular application.

All filings must (1) bear in all capital letters the title ''PROTEST'' or ''MOTION TO INTERVENE;'' (2) set forth in the heading the name of the applicant and the project number of the application to which the filing responds; (3) furnish the name, address, and telephone number of the person protesting or intervening; and (4) otherwise comply with the requirements of 18 CFR 385.2001 through 385.2005. Agencies may obtain copies of the application directly from the applicant. A copy of any protest or motion to intervene must be served upon each representative of the applicant specified in the particular application.

o. *Procedural schedule:* The application will be processed according to the following Hydro Licensing Schedule. Revisions to the schedule will be made as appropriate.

Issue Acceptance letter	November 2007.
Issue Scoping Document 1 for comments.	April 2008.
Issue Scoping Document 2 (if necessary).	June 2008.
Notice of application is ready for environmental analysis.	October 2008.
Notice of the availability of the draft EA.	June 2009.

Kimberly D. Bose,

Secretary.

[FR Doc. E7–23454 Filed 12–3–07; 8:45 am]

BILLING CODE 6717–01–P

DEPARTMENT OF ENERGY

Federal Energy Regulatory Commission

Combined Notice of Filings #1

November 27, 2007.

Take notice that the Commission has received the following Natural Gas Pipeline Rate and Refund Report filings:

Docket Numbers: RP07–319–001.

Applicants: Viking Gas Transmission Company.

Description: Viking Gas Transmission Company submits Substitute Twelfth Revised Sheet 5C to FERC Gas Tariff, First Revised Volume 1.

Filed Date: 11/20/2007.

Accession Number: 20071121–0122.

Comment Date: 5 p.m. Eastern Time on Monday, December 3, 2007.

Docket Numbers: RP96–320–074.

Applicants: Gulf South Pipeline Company, LP.

Description: Gulf South Pipeline Company, LP submits negotiated rate contracts executed and its various customers in relation to the East Texas to Mississippi Expansion Project.

Filed Date: 11/20/2007.

Accession Number: 20071121–0080.

Comment Date: 5 p.m. Eastern Time on Monday, December 3, 2007.

Docket Numbers: RP99–176–144.

Applicants: Natural Gas Pipeline Co. of America, Natural Gas Co. of America.

Description: Natural Gas Pipeline Company of America submits Amendment 1 to the Transportation Rate Schedule FTS Agreement with Eagle Energy Partners 1, LP.

Filed Date: 11/20/2007.

Accession Number: 20071120–0131.

Comment Date: 5 p.m. Eastern Time on Monday, December 3, 2007.

Any person desiring to intervene or to protest in any of the above proceedings must file in accordance with Rules 211 and 214 of the Commission's Rules of Practice and Procedure (18 CFR 385.211 and 385.214) on or before 5 p.m. Eastern time on the specified comment date. It is not necessary to separately intervene again in a subdocket related to a compliance filing if you have previously intervened in the same docket. Protests will be considered by the Commission in determining the appropriate action to be taken, but will not serve to make protestants parties to the proceeding. Anyone filing a motion to intervene or protest must serve a copy of that document on the Applicant. In reference to filings initiating a new proceeding, interventions or protests submitted on or before the comment deadline need not be served on persons other than the Applicant.

The Commission encourages electronic submission of protests and interventions in lieu of paper, using the FERC Online links at *http://www.ferc.gov.* To facilitate electronic service, persons with Internet access who will eFile a document and/or be listed as a contact for an intervenor must create and validate an eRegistration account using the eRegistration link. Select the eFiling link to log on and submit the intervention or protests.

Persons unable to file electronically should submit an original and 14 copies of the intervention or protest to the Federal Energy Regulatory Commission, 888 First St., NE., Washington, DC 20426.

The filings in the above proceedings are accessible in the Commission's eLibrary system by clicking on the appropriate link in the above list. They are also available for review in the Commission's Public Reference Room in Washington, DC. There is an eSubscription link on the Web site that enables subscribers to receive e-mail notification when a document is added to a subscribed dockets(s). For assistance with any FERC Online service, please e-mail *FERCOnlineSupport@ferc.gov,* or call (866) 208–3676 (toll free). For TTY, call (202) 502–8659.

Nathaniel J. Davis, Sr.,

Acting Deputy Secretary.

[FR Doc. E7–23446 Filed 12–3–07; 8:45 am]

BILLING CODE 6717–01–P

ENVIRONMENTAL PROTECTION AGENCY

[EPA–R05–OAR–2007–0957; FRL–8501–2]

Adequacy Status of the Kewaunee County, Wisconsin, Submitted 8-Hour Ozone Redesignation and Maintenance Plan for Transportation Conformity Purposes

AGENCY: Environmental Protection Agency (EPA).

ACTION: Notice of adequacy.

SUMMARY: In this notice, EPA is notifying the public that we have found that the motor vehicle emissions budgets (MVEBs) for 8-hour ozone in Kewaunee County, Wisconsin are adequate for conformity purposes. As a result of our finding, Kewaunee County

must use the MVEBs from the submitted 8-hour ozone redesignation and maintenance plan for future conformity determinations.

DATES: This finding is effective December 19, 2007.

FOR FURTHER INFORMATION CONTACT: Anthony Maietta, Life Scientist, Criteria Pollutant Section (AR–18J), Air Programs Branch, Air and Radiation Division, United States Environmental Protection Agency, Region 5, 77 West Jackson Boulevard, Chicago, Illinois 60604, (312) 353–8777, *Maietta.anthony@epa.gov.*

SUPPLEMENTARY INFORMATION: Throughout this document, whenever ''we'', ''us'' or ''our'' is used, we mean EPA.

Background

Today's action is simply an announcement of a finding that we have already made. EPA Region 5 sent a letter to the Wisconsin Department of Natural Resources on November 6, 2007, stating that the 2012 and 2018 MVEBs in Kewaunee County are adequate. Wisconsin submitted the budgets as part of the 8-hour ozone redesignation request and maintenance plan for this area. This submittal was announced on EPA's conformity website, and received no comments: *http://www.epa.gov/otaq/stateresources/transconf/adequacy.htm,* (once there, click on ''What SIP submissions are currently under EPA adequacy review?'').

The 2012 and 2018 MVEBs, in tons per day (tpd), for volatile organic compounds (VOC) and oxides of nitrogen (NO_X) for Kewaunee County are as follows:

	2012 MVEB (tpd)	2018 MVEB (tpd)
VOC	0.43	0.32
NO_X	0.80	0.47

Transportation conformity is required by section 176(c) of the Clean Air Act. EPA's conformity rule requires that transportation plans, programs, and projects conform to state air quality implementation plans and establishes the criteria and procedures for determining whether or not they do. Conformity to a State Implementation Plan (SIP) means that transportation activities will not produce new air quality violations, worsen existing violations, or delay timely attainment of the national ambient air quality standards.

The criteria by which we determine whether a SIP's motor vehicle emission budgets are adequate for conformity purposes are outlined in 40 CFR 93.118(e)(4). We have described our process for determining the adequacy of submitted SIP budgets in our July 1, 2004, preamble starting at 69 FR 40038, and we used the information in these resources while making our adequacy determination. Please note that an adequacy review is separate from EPA's completeness review, and it also should not be used to prejudge EPA's ultimate approval of the SIP. Even if we find a budget adequate, the SIP could later be disapproved.

The finding and the response to comments are available at EPA's conformity Web site: *http://www.epa.gov/otaq/stateresources/transconf/adequacy.htm.*

Authority: 42 U.S.C. 7401–7671q.

Dated: November 20, 2007.

Bharat Mathur,

Acting Regional Administrator, Region 5.

[FR Doc. E7–23493 Filed 12–3–07; 8:45 am]

BILLING CODE 6560–50–P

ENVIRONMENTAL PROTECTION AGENCY

[Regional Docket Nos. V–2006–3, FRL–8501–5]

Clean Air Act Operating Permit Program; Petition for Objection to State Operating Permit for Louisiana Pacific Corporation, Tomahawk, WI

AGENCY: Environmental Protection Agency (EPA).

ACTION: Notice of final order on petition to object to Clean Air Act operating permit.

SUMMARY: This document announces that the EPA Administrator has responded to a petition asking EPA to object to a Clean Air Act (Act) operating permit issued by the Wisconsin Department of Natural Resources. Specifically, the Administrator granted in part and denied in part the petition submitted by David Bender of Garvey McNeil & McGillivray, S.C., on behalf of the Sierra Club, to object to the operating permit for Louisiana Pacific Corporation's Tomahawk, Wisconsin, facility.

Pursuant to section 505(b)(2) of the Act, a petitioner may seek in the United States Court of Appeals for the appropriate circuit judicial review of those portions of the petition which EPA denied. Any petition for review shall be filed within 60 days from the date this notice appears in the **Federal Register**, pursuant to section 307 of the Act.

ADDRESSES: You may review a copy of the final order, the petition, and other supporting information at the EPA, Region 5 Office, 77 West Jackson Boulevard, Chicago, Illinois 60604. If you wish to examine these documents, you should make an appointment at least 24 hours before visiting day. Additionally, the final order for the Louisiana Pacific petition is available electronically at: *http://yosemite.epa.gov/r5/ardcorre.nsf/permits.*

FOR FURTHER INFORMATION CONTACT: Pamela Blakley, Chief, Air Permits Section, Air Programs Branch, Air and Radiation Division, EPA, Region 5, 77 West Jackson Boulevard, Chicago, Illinois 60604, telephone (312) 886–4447.

SUPPLEMENTARY INFORMATION: The Act affords EPA a 45-day period to review, and object to as appropriate, operating permits proposed by state permitting authorities. Section 505(b)(2) of the Act authorizes any person to petition the EPA Administrator within 60 days after the expiration of the EPA review period to object to state operating permits if EPA has not done so. A petition must be based only on objections to the permit that were raised with reasonable specificity during the public comment period provided by the state, unless the petitioner demonstrates that it was impracticable to raise issues during the comment period, or the grounds for the issues arose after this period.

On May 15, 2006, the EPA received a petition from David Bender of Garvey McNeil & McGillivray, S.C., on behalf of the Sierra Club, that EPA object to the Title V operating permit for the Louisiana Pacific Tomahawk facility. The petition raised issues regarding: (1) The sufficiency of monitoring for visible and particulate matter emissions; (2) the alleged failure to include federally enforceable applicable State Implementation Plan limits; (3) language that allegedly violates the credible evidence rule; and (4) conditions that allegedly are not practically enforceable.

On November 5, 2007, the Administrator issued an order granting in part and denying in part the petition. The order explains the reasons behind EPA's conclusion.

Dated: November 20, 2007.

Bharat Mathur,

Acting Regional Administrator, Region 5.

[FR Doc. E7–23479 Filed 12–3–07; 8:45 am]

BILLING CODE 6560–50–P

ENVIRONMENTAL PROTECTION AGENCY

[Regional Docket Nos. V–2005–5, FRL–8501–7]

Clean Air Act Operating Permit Program; Petition for Objection to State Operating Permit for Walnut Street

AGENCY: Environmental Protection Agency (EPA).

ACTION: Notice of final order on petition to object to Clean Air Act operating permit.

SUMMARY: This document announces that the EPA Administrator has responded to a petition asking EPA to object to a Clean Air Act (Act) operating permit issued by the Wisconsin Department of Natural Resources. Specifically, the Administrator granted in part and denied in part the petition submitted by the Sierra Club to object to the operating permit for Wisconsin Department of Administration's Walnut Street Heating Plant (Walnut Street).

Pursuant to section 505(b)(2) of the Act, a Petitioner may seek in the United States Court of Appeals for the appropriate circuit judicial review of those portions of a petition which EPA denied. Any petition for review shall be filed within 60 days from the date this notice appears in the **Federal Register**, pursuant to section 307 of the Act.

ADDRESSES: You may review copies of the final order, the petition, and other supporting information at the EPA, Region 5 Office, 77 West Jackson Boulevard, Chicago, Illinois 60604. If you wish to examine these documents, you should make an appointment at least 24 hours before visiting day. Additionally, the final order for the Walnut Street petition is available electronically at: *http://yosemite.epa.gov/r5/ardcorre.nsf/permits.*

FOR FURTHER INFORMATION CONTACT: Pamela Blakley, Chief, Air Permits Section, Air Programs Branch, Air and Radiation Division, EPA, Region 5, 77 West Jackson Boulevard, Chicago, Illinois 60604, telephone (312) 886–4447.

SUPPLEMENTARY INFORMATION: The Act affords EPA a 45-day period to review, and object to as appropriate, operating permits proposed by state permitting authorities. Section 505(b)(2) of the Act authorizes any person to petition the EPA Administrator within 60 days after the expiration of the EPA review period to object to a state operating permit if EPA has not done so. A petition must be based only on objections to the permit that were raised with reasonable specificity during the public comment period provided by the state, unless the petitioner demonstrates that it was impracticable to raise issues during the comment period, or the grounds for the issues arose after this period.

On May 24, 2005, EPA received a petition from the Sierra Club requesting that EPA object to the Title V operating permit for Walnut Street. The petition raised issues regarding: (1) Conditions for monitoring air pollutants; (2) language related to credible evidence; (3) the practical enforceability of permit conditions; and, (4) limits marked not federally enforceable. The petitioner alleged that the proposed permit is legally inadequate because the permit: (1) fails to include conditions that meet the legal requirements for monitoring; (2) contains conditions that violate the requirements related to credible evidence; (3) contains conditions that violate EPA policy requiring a permit to be practically enforceable; and, (4) limits federal enforceability and illegally makes the limits not federally enforceable.

On November 5, 2007, the Administrator issued an order granting in part and denying in part the petition. The order explains the reasons behind EPA's conclusion.

Dated: November 20, 2007.

Bharat Mathur,

Acting Regional Administrator, Region 5.

[FR Doc. E7–23481 Filed 12–3–07; 8:45 am]

BILLING CODE 6560–50–P

ENVIRONMENTAL PROTECTION AGENCY

[FRL–8501–9 ; Docket ID No. EPA–HQ–ORD–2007–0920]

Board of Scientific Counselors, Human Health Risk Assessment Subcommittee Meeting—December 2007

AGENCY: Environmental Protection Agency (EPA).

ACTION: Notice of Meeting.

SUMMARY: Pursuant to the Federal Advisory Committee Act, Public Law 92–463, the Environmental Protection Agency, Office of Research and Development (ORD), gives notice of one meeting of the Board of Scientific Counselors (BOSC) Human Health Risk Assessment Subcommittee.

DATES: The meeting (via teleconference) will be held on Thursday, December 20, 2007, from 11 a.m. to 1 p.m., Eastern Time. The meeting may adjourn early if all business is finished. Requests for the draft agenda or for making oral presentations at the meeting will be accepted up to 1 business day before the meeting.

ADDRESSES: Participation in the conference call will be by teleconference only—a meeting room will not be used. Members of the public may obtain the call-in number and access code for the call from Joanna Foellmer, whose contact information is listed under the **FOR FURTHER INFORMATION CONTACT** section of this notice. Submit your comments, identified by Docket ID No. EPA–HQ–ORD–2007–0920, by one of the following methods:

- *http://www.regulations.gov:* Follow the on-line instructions for submitting comments.
- *E-mail:* Send comments by electronic mail (e-mail) to: *ORD.Docket@epa.gov*, *Attention:* Docket ID No. EPA–HQ–ORD–2007–0920.
- *Fax:* Fax comments to: (202) 566–0224, *Attention:* Docket ID No. EPA–HQ–ORD–2007–0920.
- *Mail:* Send comments by mail to: Board of Scientific Counselors, Human Health Risk Assessment Subcommittee Meetings—Fall 2007 Docket, Mailcode: 2822T, 1200 Pennsylvania Ave., NW., Washington, DC 20460, Attention Docket ID No. EPA–HQ–ORD–2007–0920.
- *Hand Delivery or Courier.* Deliver comments to: EPA Docket Center (EPA/DC), Room 3334, EPA West Building, 1301 Constitution Avenue, NW., Washington, DC, *Attention:* Docket ID No. EPA–HQ–ORD–2007–0920.

Note: This is not a mailing address. Such deliveries are only accepted during the docket's normal hours of operation, and special arrangements should be made for deliveries of boxed information.

Instructions: Direct your comments to Docket ID No. EPA–HQ–ORD–2007–0920. EPA's policy is that all comments received will be included in the public docket without change and may be made available online at *http://www.regulations.gov*, including any personal information provided, unless the comment includes information claimed to be Confidential Business Information (CBI) or other information whose disclosure is restricted by statute. Do not submit information that you consider to be CBI or otherwise protected through *http://www.regulations.gov* or e-mail. The *http://www.regulations.gov* Web site is an ''anonymous access'' system, which means EPA will not know your identity or contact information unless you provide it in the body of your comment. If you send an e-mail comment directly

to EPA without going through *http://www.regulations.gov*, your e-mail address will be automatically captured and included as part of the comment that is placed in the public docket and made available on the Internet. If you submit an electronic comment, EPA recommends that you include your name and other contact information in the body of your comment and with any disk or CD–ROM you submit. If EPA cannot read your comment due to technical difficulties and cannot contact you for clarification, EPA may not be able to consider your comment. Electronic files should avoid the use of special characters, any form of encryption, and be free of any defects or viruses. For additional information about EPA's public docket visit the EPA Docket Center homepage at *http://www.epa.gov/epahome/dockets.htm*.

Docket: All documents in the docket are listed in the *http://www.regulations.gov* index. Although listed in the index, some information is not publicly available, e.g., CBI or other information whose disclosure is restricted by statute. Certain other material, such as copyrighted material, will be publicly available only in hard copy. Publicly available docket materials are available either electronically in *http://www.regulations.gov* or in hard copy at the Board of Scientific Counselors, Human Health Risk Assessment Subcommittee Meetings—Fall 2007 Docket, EPA/DC, EPA West, Room 3334, 1301 Constitution Ave., NW., Washington, DC. The Public Reading Room is open from 8:30 a.m. to 4:30 p.m., Monday through Friday, excluding legal holidays. The telephone number for the Public Reading Room is (202) 566–1744, and the telephone number for the ORD Docket is (202) 566–1752.

FOR FURTHER INFORMATION CONTACT: The Designated Federal Officer via mail to: Joanna Foellmer, Mail Code 8601D, Office of Research and Development, U. S. Environmental Protection Agency, 1200 Pennsylvania Avenue, NW., Washington, DC 20460; via phone/voice mail at: (202) 564–3208; via fax at: (202) 565–0061; or via e-mail at: *foellmer.joanna@epa.gov*.

Note: Change in address and phone number as of December 6th. The mail code will be 8601P. The new phone number will be accessible from the original phone number (202–564–3208).

SUPPLEMENTARY INFORMATION:

General Information

Any member of the public interested in receiving a draft BOSC agenda or making a presentation at the meeting may contact Joanna Foellmer, the Designated Federal Officer, via any of the contact methods listed in the **FOR FURTHER INFORMATION CONTACT** section above. In general, each individual making an oral presentation will be limited to a total of three minutes.

Proposed agenda item for the meeting includes, but is not limited to: discussion of the subcommittee's draft report on ORD's Human Health Risk Assessment Program. The meeting is open to the public. The subcommittee roster and charge can be accessed at: *http://www.epa.gov/osp/bosc/subcomm-hhra.htm*.

Information on Services for Individuals with Disabilities: For information on access or services for individuals with disabilities, please contact Joanna Foellmer on (202) 564–3208 or *foellmer.joanna@epa.gov*. To request accommodation of a disability, please contact Joanna Foellmer, preferably at least 10 days prior to the meeting, to give EPA as much time as possible to process your request.

Dated: November 27, 2007.

Connie Bosma,

Acting Director, Office of Science Policy.

[FR Doc. E7–23485 Filed 12–3–07; 8:45 am]

BILLING CODE 6560–50–P

FEDERAL RESERVE SYSTEM

Formations of, Acquisitions by, and Mergers of Bank Holding Companies

The companies listed in this notice have applied to the Board for approval, pursuant to the Bank Holding Company Act of 1956 (12 U.S.C. 1841 *et seq.*) (BHC Act), Regulation Y (12 CFR Part 225), and all other applicable statutes and regulations to become a bank holding company and/or to acquire the assets or the ownership of, control of, or the power to vote shares of a bank or bank holding company and all of the banks and nonbanking companies owned by the bank holding company, including the companies listed below.

The applications listed below, as well as other related filings required by the Board, are available for immediate inspection at the Federal Reserve Bank indicated. The application also will be available for inspection at the offices of the Board of Governors. Interested persons may express their views in writing on the standards enumerated in the BHC Act (12 U.S.C. 1842(c)). If the proposal also involves the acquisition of a nonbanking company, the review also includes whether the acquisition of the nonbanking company complies with the standards in section 4 of the BHC Act (12 U.S.C. 1843). Unless otherwise noted, nonbanking activities will be conducted throughout the United States. Additional information on all bank holding companies may be obtained from the National Information Center website at *www.ffiec.gov/nic/*.

Unless otherwise noted, comments regarding each of these applications must be received at the Reserve Bank indicated or the offices of the Board of Governors not later than December 28, 2007.

A. Federal Reserve Bank of Richmond (A. Linwood Gill, III, Vice President) 701 East Byrd Street, Richmond, Virginia 23261–4528:

1. RBC Centura Banks, Inc., Raleigh, North Carolina; Royal Bank of Canada, Montreal, Canada; Royal Bank Holding Inc., Toronto, Canada; RBC Holdings (USA) Inc., New York, New York; RBC USA Holdco Corporation, New York, New York; and Prism Financial Corporation, Wilmington, Delaware, to acquire 100 percent of the voting shares of Alabama National BanCorporation, Birmingham, Alabama, and thereby indirectly acquire voting shares of Alabama Exchange Bank, Tuskegee, Alabama; Community Bank of Naples, National Association, Naples, Florida; Cypress Coquina Bank, Ormond Beach, Florida; First American Bank, Birmingham, Alabama; First Gulf Bank, National Association, Pensacola, Florida; Florida Choice Bank, Mount Dora, Florida; Georgia State Bank, Mableton, Georgia; Indian River National Bank, Vero Beach, Florida; Millennium Bank, Gainesville, Florida; and The Peachtree Bank, Duluth, Georgia.

Board of Governors of the Federal Reserve System, November 29, 2007.

Jennifer J. Johnson,

Secretary of the Board.

[FR Doc.E7–23464 Filed 12–3–07; 8:45 am]

BILLING CODE 6210–01–S

FEDERAL RESERVE SYSTEM

Sunshine Act Meeting

AGENCY HOLDING THE MEETING: Board of Governors of the Federal Reserve System.

TIME AND DATE: 12 p.m., Monday, December 10, 2007.

PLACE: Marriner S. Eccles Federal Reserve Board Building, 20th and C Streets, NW., Washington, DC 20551.

STATUS: Closed.

MATTERS TO BE CONSIDERED:

1. Personnel actions (appointments, promotions, assignments, reassignments, and salary actions)

involving individual Federal Reserve System employees.

2. Any items carried forward from a previously announced meeting.

FOR FURTHER INFORMATION CONTACT: Michelle Smith, Director, or Dave Skidmore, Assistant to the Board, Office of Board Members at 202–452–2955.

SUPPLEMENTARY INFORMATION: You may call 202–452–3206 beginning at approximately 5 p.m. two business days before the meeting for a recorded announcement of bank and bank holding company applications scheduled for the meeting; or you may contact the Board's Web site at *http://www.federal reserve.gov* for an electronic announcement that not only lists applications, but also indicates procedural and other information about the meeting.

Board of Governors of the Federal Reserve System, November 30, 2007.

Robert deV. Frierson,

Deputy Secretary of the Board.

[FR Doc. 07–5944 Filed 11–30–07; 3:34 pm]

BILLING CODE 6210–01–M

FEDERAL TRADE COMMISSION

[File No. 071 0120]

The Great Atlantic & Pacific Tea Company, Inc. And Pathmark Stores, Inc.; Analysis of Complaint and Proposed Consent Order to Aid Public Comment

AGENCY: Federal Trade Commission.

ACTION: Proposed Consent Agreement.

SUMMARY: The consent agreement in this matter settles alleged violations of federal law prohibiting unfair or deceptive acts or practices or unfair methods of competition. The attached Analysis to Aid Public Comment describes both the allegations in the draft complaint and the terms of the consent order—embodied in the consent agreement—that would settle these allegations.

DATES: Comments must be received on or before December 27, 2007.

ADDRESSES: Interested parties are invited to submit written comments. Comments should refer to ''A&P Pathmark, File No. 071 0120,'' to facilitate the organization of comments. A comment filed in paper form should include this reference both in the text and on the envelope, and should be mailed or delivered to the following address: Federal Trade Commission/Office of the Secretary, Room 135–H, 600 Pennsylvania Avenue, N.W., Washington, D.C. 20580. Comments containing confidential material must be filed in paper form, must be clearly labeled ''Confidential,'' and must comply with Commission Rule 4.9(c). 16 CFR 4.9(c) (2005).[1] The FTC is requesting that any comment filed in paper form be sent by courier or overnight service, if possible, because U.S. postal mail in the Washington area and at the Commission is subject to delay due to heightened security precautions. Comments that do not contain any nonpublic information may instead be filed in electronic form as part of or as an attachment to email messages directed to the following email box: *consentagreement@ftc.gov*.

The FTC Act and other laws the Commission administers permit the collection of public comments to consider and use in this proceeding as appropriate. All timely and responsive public comments, whether filed in paper or electronic form, will be considered by the Commission, and will be available to the public on the FTC website, to the extent practicable, at *www.ftc.gov*. As a matter of discretion, the FTC makes every effort to remove home contact information for individuals from the public comments it receives before placing those comments on the FTC website. More information, including routine uses permitted by the Privacy Act, may be found in the FTC's privacy policy, at *http://www.ftc.gov/ftc/privacy.htm*.

FOR FURTHER INFORMATION CONTACT: Cathy Moscatelli, FTC Bureau of Competition, 600 Pennsylvania Avenue, NW, Washington, D.C. 20580, (202) 326–2749.

SUPPLEMENTARY INFORMATION: Pursuant to section 6(f) of the Federal Trade Commission Act, 38 Stat. 721, 15 U.S.C. 46(f), and § 2.34 of the Commission Rules of Practice, 16 CFR 2.34, notice is hereby given that the above-captioned consent agreement containing a consent order to cease and desist, having been filed with and accepted, subject to final approval, by the Commission, has been placed on the public record for a period of thirty (30) days. The following Analysis to Aid Public Comment describes the terms of the consent agreement, and the allegations in the complaint. An electronic copy of the full text of the consent agreement package can be obtained from the FTC Home Page (for November 27, 2007), on the World Wide Web, at *http://www.ftc.gov/os/2007/11/index.htm*. A paper copy can be obtained from the FTC Public Reference Room, Room 130–H, 600 Pennsylvania Avenue, NW, Washington, D.C. 20580, either in person or by calling (202) 326–2222.

Public comments are invited, and may be filed with the Commission in either paper or electronic form. All comments should be filed as prescribed in the **ADDRESSES** section above, and must be received on or before the date specified in the **DATES** section.

Analysis of Agreement Containing Consent Order to Aid Public Comment

I. Introduction

The Federal Trade Commission (''Commission'') has accepted for public comment, and subject to final approval, an Agreement Containing Consent Orders (''Consent Agreement'') from The Great Atlantic & Pacific Tea Company, Inc. (''A&P'') and Pathmark Stores, Inc. (''Pathmark''). The purpose of the Consent Agreement is to remedy the anticompetitive effects that likely would result from A&P's proposed $1.3 billion acquisition (a figure that includes the assumption of debt by A&P) of Pathmark, as alleged in the Complaint the Commission has issued.

The Consent Agreement provides for relief in two markets where the Commission believes the proposed acquisition is anticompetitive. Under the terms of the Consent Agreement, A&P must divest four Waldbaum's supermarkets and one Pathmark supermarket in Staten Island, New York, and one Waldbaum's supermarket in Shirley, Long Island, New York.

The Commission, A&P, and Pathmark have also agreed to an Order to Maintain Assets. This order requires A&P and Pathmark to maintain the assets required by the Consent Agreement to be divested, pending their divestiture.

The investigation and settlement negotiations were conducted in close cooperation with the Office of the New York State Attorney General, which anticipates entering into an agreement with the parties that mirrors the proposed consent order divestitures.

II. The Parties and the Transaction

A&P is a corporation organized, existing, and doing business under and by virtue of the laws of the State of Maryland, with its office and principal place of business located at 2 Paragon Drive, Montvale, New Jersey 07645. The company owns and operates about 316 supermarkets in the States of Connecticut, Delaware, Maryland, New

[1] The comment must be accompanied by an explicit request for confidential treatment, including the factual and legal basis for the request, and must identify the specific portions of the comment to be withheld from the public record. The request will be granted or denied by the Commission's General Counsel, consistent with applicable law and the public interest. *See* Commission Rule 4.9(c), 16 CFR 4.9(c).

York, New Jersey, and in the District of Columbia. A&P operates its supermarkets under the A&P, A&P Super Foodmart, Food Basics, Food Emporium, Super Fresh and Waldbaum's banners. A&P had revenues from all operations in 2006 of about $6.9 billion.

Pathmark is a corporation organized, existing, and doing business under and by virtue of the laws of the State of Delaware, with its office and principal place of business located at 200 Milik Street, Carteret, New Jersey 07008. The company owns and operates about 141 supermarkets in the States of Delaware, New York, New Jersey, and Pennsylvania, all operating under the Pathmark banner. Pathmark had revenues in 2006 of about $4.1 billion.

Under the terms of their March 4, 2007, agreement, A&P will acquire all of the voting securities of Pathmark for approximately $1.3 billion, including the assumption of debt.

III. The Complaint

According to the Commission's Complaint, A&P and Pathmark compete in the retail sale of grocery products from supermarkets. Supermarkets are stores that carry a wide selection and deep inventory of food and grocery products in a variety of brands and sizes, enabling consumers to purchase substantially all of their food and other grocery shopping requirements in a single shopping visit.

The Complaint alleges that the acquisition by A&P of Pathmark would be competitively problematic in Staten Island, New York, and Shirley, Long Island, New York, both of which are highly concentrated geographic markets. As alleged in the Complaint, the proposed acquisition may increase opportunities for all firms in these markets to engage in coordinated interaction or for A&P to exercise unilateral market power, leading to higher prices or decreases in services. The Complaint further alleges that entry would not be timely, likely, or sufficient to prevent anticompetitive effects in the geographic markets.

The Complaint alleges that the proposed acquisition, if consummated, would violate Section 7 of the Clayton Act, as amended, 15 U.S.C. § 18, and Section 5 of the Federal Trade Commission Act, as amended, 15 U.S.C. § 45, by lessening competition in connection with the retail sale of grocery products from supermarkets.

IV. The Proposed Consent Order

Under the terms of the proposed Consent Order, Respondent A&P must sell four Waldbaum's supermarket stores and one Pathmark supermarket store in Staten Island and a Waldbaum's store in Shirley, Long Island, together with their related assets. The addresses of the Waldbaum's stores required to be divested are as follows:

1. 3251 Richmond Ave. South
   Staten Island, NY
2. 778 Manor Road
   Staten Island, NY
3. 4343 Amboy Road
   Staten Island, NY
4. 1441 Richmond Ave
   Staten Island, NY
5. 999 Montauk Hwy.
   Shirley, NY

The address of the one Pathmark store required to be divested is:

1. 2660 Hylan Blvd
   Staten Island, NY

The one Pathmark store and four Waldbaum's stores in Staten Island are required to be divested to King Kullen Grocery Co., Inc., headquartered in Bethpage, New York, and the Waldbaum's store in Shirley is required to be divested to The Stop & Shop Supermarket Company LLC (''Stop & Shop''). Stop & Shop is a subsidiary of Koninklijke Ahold NV, a Dutch corporation. The Commission evaluated these prospective acquirers and determined that they are well qualified to operate the divested supermarkets.

The proposed Consent Order requires that the divestitures occur no later than January 10, 2008. If Respondents consummate the divestitures to the purchasers during the public comment period, and if, at the time the Commission determines whether to make the proposed Consent Order final, the Commission notifies Respondents that the purchasers are not acceptable acquirers, or that the asset purchase agreements with those acquirers are not acceptable manners of divestiture, then Respondents must immediately rescind those transactions and divest the five Waldbaum's stores and one Pathmark store (and their related assets) to other buyers, within three (3) months of the date the Consent Order becomes final. Under those circumstances, Respondents must divest those stores and related assets only to an acquirer that receives the prior approval of the Commission and only in a manner that receives the prior approval of the Commission. In the event Respondents have not divested the supermarkets in a manner that satisfies the requirements of the Consent Order, the Commission may appoint a trustee to divest those assets.

The Commission has also issued an Order to Maintain Assets. Under its terms, Respondents are required to maintain the viability of the six supermarkets and their related assets pending their divestiture. More specifically, Respondents must: (1) maintain the viability, competitiveness, and marketability of the assets; (2) not cause the wasting or deterioration of those assets; (3) not sell, transfer, encumber, or otherwise impair the marketability of the assets; (4) maintain the supermarkets consistent with the parties' past practices; (5) use best efforts to preserve the supermarkets' existing relationships with suppliers, customers, and employees; and (6) keep the supermarkets open for business and maintain inventories at levels consistent with past practices.

The proposed Consent Order prohibits Respondents, for a period of ten years, from acquiring, without providing the Commission with prior notice, any ownership or leasehold interest in any facility that has operated as a supermarket within six (6) months prior to the date of such proposed acquisition, in Staten Island, New York, and the Shirley, Long Island, New York area. The proposed Consent Order also prohibits Respondents, for a period of ten (10) years, from entering into or enforcing any agreement that restricts the ability of any person acquiring any interest in any location formerly used by Respondents as a supermarket in Staten Island or the Shirley area to operate that location as a supermarket. The proposed Consent Order does not prohibit Respondents from building new supermarkets, or leasing a facility not operated as a supermarket within the preceding six (6) months.

Under the terms of the proposed Consent Order, A&P is also required to provide the Commission with regular compliance reports demonstrating how it is complying with the terms of the Consent Agreement until it is in full compliance with that Agreement.

V. Opportunity for Public Comment

The proposed Consent Agreement has been placed on the public record for thirty (30) days for the purpose of soliciting comments from the public. All comments received during this period will become part of the public record. After the thirty (30) day comment period, the Commission will again consider the Consent Agreement, together with all comments received. After that second review, the Commission may either withdraw from the Consent Agreement or make its Order final.

By accepting the Consent Agreement subject to final approval, the Commission anticipates that the competitive problems alleged in the Complaint will be resolved. The purpose of this analysis is to invite public comment on the Consent Order, including the proposed divestitures, to aid the Commission in its determination whether it should make final the Consent Agreement. This analysis is not an official interpretation of the Consent Agreement nor does it modify any of its terms.

By direction of the Commission.

Donald S. Clark,

Secretary.

[FR Doc. E7–23419 Filed 12–3–07: 8:45 am]

BILLING CODE 6750–01–S

DEPARTMENT OF HEALTH AND HUMAN SERVICES

Administration for Children and Families

Proposed Information Collection Activity; Comment Request Proposed Project

Title: Building Strong Families (BSF) Demonstration and Evaluation—Impact Study Second Follow-up.

OMB No.: New Collection.

Description: The Administration for Children and Families (ACF), U.S. Department of Health and Human Services (HHS), is proposing a data collection activity as part of the Building Strong Families (BSF) Demonstration and Evaluation. The proposed collection will consist of two elements: (1) A telephone survey to be administered to both partners in couples enrolled in the BSF research sample about 36 months after enrollment, and (2) observational assessments of BSF families and their children.

These data collections are part of the BSF evaluation, which is an important opportunity to learn if well-designed interventions can help low-income couples develop the knowledge and relationship skills that research has shown are associated with healthy marriages. BSF programs provide instruction and support to improve marriage and relationship skills and enhance couples' understanding of marriage. In addition, BSF programs provide links to a variety of other services that could help couples sustain a healthy relationship (e.g., employment assistance). The BSF evaluation uses an experimental design that randomly assigns couples who volunteer to participate in BSF programs to a program or to a control group.

The 36-month data collection effort draws heavily from the 15-month survey conducted in BSF sites. Materials for the 15-month data collection effort were previously submitted to OMB and were approved under OMB Control No. 0970–0304.

Respondents: The respondents for the telephone questionnaire will be all couples in the BSF evaluation. The respondents for the observational assessments will be a sub-sample of children of the couples.

ANNUAL BURDEN ESTIMATES

Instrument	Annual number of respondents	Number of responses per respondent	Average burden hours per response	Estimated annual burden hours
36-month telephone survey (female partner)	2,099	1	.9166666 (55 minutes)	1,924
36-month telephone survey (male partner)	1,978	1	.8333333 (50 minutes)	1,648
Child/family observations	1,125	1	.6666666 (40 minutes)	750

Estimated Total Annual Burden Hours: 4,322.

In compliance with the requirements of Section 3506(c)(2)(A) of the Paperwork Reduction Act of 1995, the Administration for Children and Families is soliciting public comment on the specific aspects of the information collection described above. Copies of the proposed collection of information can be obtained and comments may be forwarded by writing to the Administration for Children and Families, Office of Administration, Office of Information Services, 370 L'Enfant Promenade, SW., Washington, DC 20447, Attn: ACF Reports Clearance Officer. E-mail address: *infocollection@acf.hhs.gov.* All requests should be identified by the title of the information collection.

The Department specifically requests comments on (a) whether the proposed collection of information is necessary for the proper performance of the functions of the agency, including whether the information shall have practical utility; (b) the accuracy of the agency's estimate of the burden of the proposed collection of information; (c) the quality, utility, and clarity of the information to be collected; and (d) ways to minimize the burden of the collection of information on respondents, including through the use of automated collection techniques or other forms of information technology. Consideration will be given to comments and suggestions submitted within 60 days of this publication.

Dated: November 26, 2007.

Brendan C. Kelly,

OPRE Reports Clearance Officer.

[FR Doc. 07–5916 Filed 12–03–07; 8:45 am]

BILLING CODE 4184–01–M

DEPARTMENT OF HEALTH AND HUMAN SERVICES

Food and Drug Administration

[Docket No. 2007N–0453]

DSM Nutritional Products, Inc.; Filing of Color Additive Petition

AGENCY: Food and Drug Administration, HHS.

ACTION: Notice.

SUMMARY: The Food and Drug Administration (FDA) is announcing that DSM Nutritional Products, Inc., has filed a petition proposing that the color additive regulations be amended to provide for the safe use of astaxanthin dimethyldisuccinate as a color additive in the feed of salmonid fish to enhance the color of their flesh.

FOR FURTHER INFORMATION CONTACT: Felicia M. Ellison, Center for Food Safety and Applied Nutrition (HFS–265), Food and Drug Administration,

5100 Paint Branch Pkwy., College Park, MD 20740–3835, 301–436–1264.

SUPPLEMENTARY INFORMATION: Under the Federal Food, Drug, and Cosmetic Act (section 721e(d)(1) (21 U.S.C. 379e(d)(1))), notice is given that a color additive petition (CAP 7C0284) has been filed by DSM Nutritional Products, Inc., 45 Waterview Blvd., Parsippany, NJ 07054. The petition proposes to amend the color additive regulations in 21 CFR part 73 to provide for the safe use of astaxanthin dimethyldisuccinate as a color additive in the feed of salmonid fish to enhance the color of their flesh.

The agency has determined under 21 CFR 25.32(r) that this action is of a type that does not individually or cumulatively have a significant effect on the human environment. Therefore, neither an environmental assessment nor an environmental impact statement is required.

Dated: November 27, 2007.

Laura M. Tarantino,

Director, Office of Food Additive Safety, Center for Food Safety and Applied Nutrition.

[FR Doc. E7–23473 Filed 12–3–07; 8:45 am]

BILLING CODE 4160–01–S

DEPARTMENT OF HEALTH AND HUMAN SERVICES

National Institutes of Health

National Institutes of Allergy and Infectious Diseases; Notice of Closed Meeting

Pursuant to section 10(d) of the Federal Advisory Committee Act, as amended (5 U.S.C. Appendix 2), notice is hereby given of the following meeting.

The meeting will be closed to the public in accordance with the provisions set forth in sections 552b(c)(4) and 552b(c)(6), Title 5 U.S.C., as amended. The grant applications and the discussions could disclose confidential trade secrets or commercial property such as patentable material, and personal information concerning individuals associated with the grant applications, the disclosure of which would constitute a clearly unwarranted invasion of personal privacy.

Name of Committee: National Institute of Allergy and Infectious Diseases Special Emphasis Panel, Organ Specific Innate Immunity.

Date: December 17, 2007.

Time: 2 p.m. to 5 p.m.

Agenda: To review and evaluate grant applications.

Place: National Institutes of Health, Rockledge 6700, 6700B Rockledge Drive, Room 3146, Bethesda, MD 20817 (Telephone Conference Call).

Contact Person: Kenneth E. Santora, PhD., Scientific Review Officer, Scientific Review Program, NIH/NIAID/DHHS, Room 3146, 6700B Rockledge Drive, MSC 7616, Bethesda, MD 20892, 301–451–2605, *ks216i@nih.gov.*

This notice is being published less than 15 days prior to the meeting due to the timing limitation imposed by the review and funding cycle.

(Catalogue of Federal Domestic Assistance Program Nos. 93.855, Allergy, Immunology, and Transplantation Research; 93.856, Microbiology and Infectious Diseases Research, National Institutes of Health, HHS)

Dated: November 26, 2007.

Jennifer Spaeth,

Director, Office of Federal Advisory Committee Policy.

[FR Doc. 07–5909 Filed 12–3–07; 8:45 am]

BILLING CODE 4140–01–M

DEPARTMENT OF HEALTH AND HUMAN SERVICES

National Institutes of Health

National Institute of General Medical Sciences; Notice of Closed Meeting

Pursuant to section 10(d) of the Federal Advisory Committee Act, as amended (5 U.S.C. Appendix 2), notice is hereby given of the following meeting.

The meeting will be closed to the public in accordance with the provisions set forth in sections 552b(c)(4) and 552b(c)(6), Title 5 U.S.C., as amended. The grant applications and the discussions could disclose confidential trade secrets or commercial property such as patentable material, and personal information concerning individuals associated with the grant applications, the disclosure of which would constitute a clearly unwarranted invasion of personal privacy.

Name of Committee: National Institute of General Medical Sciences Special Emphasis Panel, MBRS—RISE and SCORE.

Date: December 11, 2007.

Time: 3 p.m. to 4 p.m.

Agenda: To review and evaluate grant applications.

Place: National Institutes of Health, Natcher Building, 45 Center Drive, Bethesda, MD 20892, (Telephone Conference Call).

Contact Person: Lisa Dunbar, PhD., Office of Scientific Review, National Institute of General Medical Sciences, National Institutes of Health, 45 Center Drive, Room 3AN12, Bethesda, MD 20892, 301–594–2849, *dunbarl@mail.nih.gov.*

This notice is being published less than 15 days prior to the meeting due to the timing limitations imposed by the review and funding cycle.

(Catalogue of Federal Domestic Assistance Program Nos. 93.375, Minority Biomedical Research Support; 93.821, Cell Biology and Biophysics Research; 93.859, Pharmacology, Physiology, and Biological Chemistry Research; 93.862, Genetics and Development Biology Research; 93.88, Minority Access to Research Careers; 93.96, Special Minority Initiatives, National Institutes of Health, HHS)

Dated: November 26, 2007.

Jennifer Spaeth,

Director, Office of Federal Advisory Committee Policy.

[FR Doc. 07–5910 Filed 12–3–07; 8:45 am]

BILLING CODE 4140–01–M

DEPARTMENT OF HEALTH AND HUMAN SERVICES

National Institutes of Health

National Institute of Mental Health; Notice of Meeting

Pursuant to section 10(d) of the Federal Advisory Committee Act, as amended (5 U.S.C. Appendix 2), notice is hereby given of a meeting of the National Advisory Mental Health Council.

The meeting will be open to the public as indicated below, with attendance limited to space available. Individuals who plan to attend and need special assistance, such as sign language interpretation or other reasonable accommodations, should notify the Contact Person listed below in advance of the meeting.

The meeting will be closed to the public in accordance with the provisions set forth in sections 552b(c)(4) and 552b(c)(6), Title 5 U.S.C., as amended. The grant applications and the discussions could disclose confidential trade secrets or commercial property such as patentable material, and personal information concerning individuals associated with the grant applications, the disclosure of which would constitute a clearly unwarranted invasion of personal privacy.

Name of Committee: National Advisory Mental Health Council.

Date: January 10–11, 2008.

Closed: January 10, 2008, 10 a.m. to 5 p.m.

Agenda: To review and evaluate grant applications and review the activities of the NIMH; Intramural Research Programs.

Place: National Institutes of Health, Neuroscience Center, 6001 Executive Boulevard, Conference Room C/D/E, Rockville, MD 20852.

Open: January 11, 2008, 8:30 a.m. to 12:30 p.m.

Agenda: Presentation of NIMH Director's report and discussion on NIMH program and policy issues.

Place: National Institutes of Health, Building 31, 31 Center Drive, C Wing, 6th Floor, Conference Room 6, Bethesda, MD 20892.

Contact Person: Jane A. Steinberg, PhD, Director, Division of Extramural Activities,

National Institute of Mental Health, NIH, Neuroscience Center, 6001 Executive Blvd., Room 6154, MSC 9609, Bethesda, MD 20892–9609, (301) 443–5047.

Any member of the public interested in presenting oral comments to the committee may notify the Contact Person listed on this notice at least 10 days in advance of the meeting. Interested individuals and representatives of organizations may submit a letter of intent, a brief description of the organization represented, and a short description of the oral presentation. Only one representative of an organization may be allowed to present oral comments and if accepted by the committee, presentations may be limited to five minutes. Both printed and electronic copies are requested for the record. In addition, any interested person may file written comments with the committee by forwarding their statement to the Contact Person listed on this notice. The statement should include the name, address, telephone number and when applicable, the business or professional affiliation of the interested person.

In the interest of security, NIH has instituted stringent procedures for entrance onto the NIH campus. All visitor vehicles, including taxicabs, hotel, and airport shuttles will be inspected before being allowed on campus. Visitors will be asked to show one form of identification (for example, a government-issued photo ID, driver's license, or passport) and to state the purpose of their visit.

Information is also available on the Institute's/Center's home page: *http://www.nimh.nih.gov/council/advis.cfm*, where an agenda and any additional information for the meeting will be posted when available.

(Catalogue of Federal Domestic Assistance Program Nos. 93.242, Mental Health Research Grants; 93.281, Scientist Development Award, Scientist Development Award for Clinicians, and Research Scientist Award; 93.282, Mental Health National Research Service Awards for Research Training, National Institutes of Health, HHS).

Dated: November 26, 2007.

Jennifer Spaeth,

Director, Office of Federal Advisory Committee Policy.

[FR Doc. 07–5911 Filed 12–3–07; 8:45 am]

BILLING CODE 4140–01–M

DEPARTMENT OF HEALTH AND HUMAN SERVICES

National Institutes of Health

National Institute on Aging; Notice of Closed Meetings

Pursuant to section 10(d) of the Federal Advisory Committee Act, as amended (5 U.S.C. Appendix 2), notice is hereby given of the following meetings.

The meetings will be closed to the public in accordance with the provisions set forth in sections 552b(c)(4) and 552b(c)(6), Title 5 U.S.C., as amended. The grant applications and the discussions could disclose confidential trade secrets or commercial property such as patentable material, and personal information concerning individuals associated with the grant applications, the disclosure of which would constitute a clearly unwarranted invasion of personal privacy.

Name of Committee: National Institute on Aging Special Emphasis Panel; Mitochondria in Neurodegenerative Disease.

Date: December 9–10, 2007.

Time: 6 p.m. to 3 p.m.

Agenda: To review and evaluate grant applications.

Place: Hyatt Regency Bethesda, One Bethesda Metro Center, Bethesda, MD 20814.

Contact Person: William Cruce, PhD., Health Scientist Administrator, Scientific Review Office, National Institute on Aging, National Institutes of Health, Room 2C212, 7201 Wisconsin Avenue, Bethesda, MD 20814, 301–402–7704, *crucew@nia.nih.gov.*

This notice is being published less than 15 days prior to the meeting due to the timing limitations imposed by the review and funding cycle.

Name of Committee: National Institute on Aging Special Emphasis Panel; Cell Quiescence.

Date: December 13–14, 2007.

Time: 6 p.m. to 3 p.m.

Agenda: To review and evaluate grant applications.

Place: Hyatt Regency Bethesda, One Bethesda Metro Center, Bethesda, MD 20814.

Contact Person: William Cruce, PhD., Health Scientist Administrator, Scientific Review Office, National Institute on Aging, National Institutes of Health, Room 2C212, 7201 Wisconsin Avenue, Bethesda, MD 20814, 301–402–7704, *crucew@nia.nih.gov.*

This notice is being published less than 15 days prior to the meeting due to the timing limitations imposed by the review and funding cycle.

(Catalogue of Federal Domestic Assistance Program Nos. 93.866, Aging Research, National Institutes of Health, HHS)

Dated: November 26, 2007.

Jennifer Spaeth,

Director, Office of Federal Advisory Committee Policy.

[FR Doc. 07–5912 Filed 12–3–07; 8:45 am]

BILLING CODE 4140–01–M

DEPARTMENT OF HEALTH AND HUMAN SERVICES

National Institutes of Health

National Institute of Neurological Disorders and Stroke; Notice of Closed Meetings

Pursuant to section 10(d) of the Federal Advisory Committee Act, as amended (5 U.S.C. Appendix 2), notice is hereby given of the following meetings.

The meetings will be closed to the public in accordance with the provisions set forth in sections 552b(c)(4) and 552b(c)(6), Title 5 U.S.C., as amended. The grant applications and the discussions could disclose confidential trade secrets or commercial property such as patentable material, and personal information concerning individuals associated with the grant applications, the disclosure of which would constitute a clearly unwarranted invasion of personal privacy.

Name of Committee: National Institute of Neurological Disorders and Stroke Special Emphasis Panel; NSDK Conflict Special Emphasis Panel.

Date: December 10, 2007.

Time: 1 p.m. to 4 p.m.

Agenda: To review and evaluate grant applications.

Place: National Institutes of Health, Neuroscience Center, 6001 Executive Boulevard, Rockville, MD 20852, (Telephone Conference Call).

Contact Person: Richard D. Crosland, PhD, Scientific Review Administrator, Scientific Review Branch, Division of Extramural Research, NINDS/NIH/DHHS/Neuroscience Center, 6001 Executive Blvd., Suite 3208, MSC 9529, Bethesda, MD 20892–9529, 301–594–0635, *rc218u@nih.gov*.

This notice is being published less than 15 days prior to the meeting due to the timing limitations imposed by the review and funding cycle.

Name of Committee: National Institute of Neurological Disorders and Stroke Special Emphasis Panel; Spotrias Review.

Date: December 11–12, 2007.

Time: 5 p.m. to 7 p.m.

Agenda: To review and evaluate grant applications.

Place: Mandarin Oriental Hotel, Washington, DC, 1330 Maryland Avenue, SW., Washington, DC 20024.

Contact Person: Shanta Rajaram, PhD, Scientific Review Administrator, Scientific Review Branch, Division of Extramural Research, NINDS/NIH/DHHS/Neuroscience Center, 6001 Executive Blvd., Suite 3208, MSC 9529, Bethesda, MD 20852, 301–435–6033, *rajarams@mail.nih.gov*.

This notice is being published less than 15 days prior to the meeting due to the timing limitations imposed by the review and funding cycle.

Name of Committee: National Institute of Neurological Disorders and Stroke Special Emphasis Panel; UTSA–SNRP.

Date: December 12, 2007.

Time: 12 p.m. to 2 p.m.

Agenda: To review and evaluate grant applications.

Place: National Institutes of Health, Neuroscience Center, 6001 Executive Boulevard, Rockville, MD 20852, (Telephone Conference Call).

Contact Person: Phillip F. Wiethorn, Scientific Review Administrator, DHHS/NIH/NINDS/DER/SRB, 6001 Executive Blvd., MSC 9529, Neuroscience Center, Room 3203, Bethesda, MD 20892–9529, 301–496–5388, *wiethorp@ninds.nih.gov*.

This notice is being published less than 15 days prior to the meeting due to the timing limitations imposed by the review and funding cycle.

Name of Committee: National Institute of Neurological Disorders and Stroke Special Emphasis Panel; Spotrias.

Date: December 13–14, 2007.

Time: 8 a.m. to 7 p.m.

Agenda: To review and evaluate grant applications.

Place: Mandarin Oriental Hotel, Washington, DC, 1330 Maryland Avenue, SW., Washington, DC 20024.

Contact Person: Shanta Rajaram, PhD, Scientific Review Administrator, Scientific Review Branch, Division of Extramural Research, NINDS/NIH/DHHS/Neuroscience Center, 6001 Executive Blvd., Suite 3208, MSC 9529, Bethesda, MD 20852, 301–435–6033, *rajarams@mail.nih.gov*.

This notice is being published less than 15 days prior to the meeting due to the timing limitations imposed by the review and funding cycle.

(Catalogue of Federal Domestic Assistance Program Nos. 93.853, Clinical Research Related to Neurological Disorders; 93.854, Biological Basis Research in the Neurosciences, National Institutes of Health, HHS)

Dated: November 26, 2007

Jennifer Spaeth,

Director, Office of Federal Advisory Committee Policy.

[FR Doc. 07–5913 Filed 12–3–07; 8:45 am]

BILLING CODE 4140–01–M

DEPARTMENT OF HEALTH AND HUMAN SERVICES

National Institutes of Health

National Institute of Child Health and Human Development, Amended Notice of Meeting

Notice is hereby given of a change in the meeting of the National Institute of Child Health and Human Development Special Emphasis Panel, December 4, 2007, 1 p.m. to December 4, 2007, 5 p.m., National Institutes of Health, 6100 Executive Boulevard, 5B01, Rockville, MD, 20852 which was published in the **Federal Register** on November 16, 2007, 72 FR 64658.

The meeting will be held on December 5, 2007. The meeting is closed to the public.

Dated: November 26, 2007.

Jennifer Spaeth,

Director, Office of Federal Advisory Committee Policy.

[FR Doc. 07–5914 Filed 12–3–07; 8:45 am]

BILLING CODE 4140–01–M

DEPARTMENT OF HEALTH AND HUMAN SERVICES

National Institutes of Health

National Institute of Mental Health Draft Strategic Plan

AGENCY: National Institute of Mental Health, NIH, HHS.

ACTION: Notice.

SUMMARY: The National Institute of Mental Health (NIMH) is developing a strategic plan for the next 3–5 years, and invites the public to provide comments on a draft of this plan. The draft plan will be publicly available through the NIMH Draft Strategic Plan Web page (*http://www.nimh.nih.gov/about/strategic-planning-reports/nimh-draft-strategic-plan.shtml*) from November 20, 2007 through December 21, 2007. The public is invited to provide comments via the e-mail address or the postal address listed on the NIMH Draft Strategic Plan Web page.

Background: NIMH is the lead Federal agency for research on mental and behavioral disorders and has as its mission to reduce the burden of these disorders through research on mind, brain, and behavior. The Institute's goal is to generate research that will transform the prevention of and recovery from mental disorders. To inspire and support research that will make a difference for those living with mental illness, the Institute is developing a Strategic Plan to help direct this complex research effort and bring into sharper focus the methods, questions, and perspectives that will transform the diagnosis, treatment, and prevention of mental disorders, ultimately paving the way toward cures.

NIMH's draft Strategic Plan outlines several Strategic Objectives that will guide the research agenda for the Institute over the next several years. The public is invited to review this draft plan and provide comments between November 20, 2007 and December 21, 2007. The draft plan may be viewed at *http://www.nimh.nih.gov/about/strategic-planning-reports/nimh-draft-strategic-plan.shtml,* and hard copies are available by calling 1–866–615–6464 (toll free) or by sending a letter requesting a copy (that includes your mailing address) to: National Institute of Mental Health, Attn: Draft Strategic Plan, 8280 Greensboro Drive, Suite 300, McLean, Virginia 22102.

Request for Comments: The public is invited to provide comments on the draft Strategic Plan. Comments may be sent to the email address listed on the NIMH Strategic Planning Web page at *http://www.nimh.nih.gov/about/strategic-planning-reports/nimh-draft-strategic-plan.shtml,* or sent to the postal address listed above.

FOR FURTHER INFORMATION CONTACT: Additional information is posted on the NIMH Strategic Planning Web page, located at *http://www.nimh.nih.gov/about/strategic-planning-reports/nimh-draft-strategic-plan.shtml.*

Comments Due Date: Comments regarding the draft of NIMH's strategic plan should be submitted via e-mail no later than December 21, 2007. Comments mailed to the above postal address must be postmarked by the same date.

Dated: November 26, 2007.

Thomas Insel,

Director, National Institute of Mental Health, National Institutes of Health.

[FR Doc. E7–23420 Filed 12–3–07; 8:45 am]

BILLING CODE 4149–01–P

DEPARTMENT OF HEALTH AND HUMAN SERVICES

Substance Abuse and Mental Health Services Administration

Current List of Laboratories Which Meet Minimum Standards To Engage in Urine Drug Testing for Federal Agencies

AGENCY: Substance Abuse and Mental Health Services Administration, HHS.

ACTION: Notice.

SUMMARY: The Department of Health and Human Services (HHS) notifies Federal agencies of the laboratories currently certified to meet the standards of Subpart C of the Mandatory Guidelines for Federal Workplace Drug Testing Programs (Mandatory Guidelines). The Mandatory Guidelines were first published in the **Federal Register** on April 11, 1988 (53 FR 11970), and subsequently revised in the **Federal Register** on June 9, 1994 (59 FR 29908), on September 30, 1997 (62 FR 51118), and on April 13, 2004 (69 FR 19644).

A notice listing all currently certified laboratories is published in the **Federal Register** during the first week of each month. If any laboratory's certification is suspended or revoked, the laboratory will be omitted from subsequent lists until such time as it is restored to full certification under the Mandatory Guidelines.

If any laboratory has withdrawn from the HHS National Laboratory Certification Program (NLCP) during the past month, it will be listed at the end, and will be omitted from the monthly listing thereafter.

This notice is also available on the Internet at *http://www.workplace.samhsa.gov and http://www.drugfreeworkplace.gov.*

FOR FURTHER INFORMATION CONTACT: Mrs. Giselle Hersh or Dr. Walter Vogl, Division of Workplace Programs, SAMHSA/CSAP, Room 2–1035, 1 Choke Cherry Road, Rockville, Maryland 20857; 240–276–2600 (voice), 240–276–2610 (fax).

SUPPLEMENTARY INFORMATION: The Mandatory Guidelines were developed in accordance with Executive Order 12564 and section 503 of Pub. L. 100–71. Subpart C of the Mandatory Guidelines, ''Certification of Laboratories Engaged in Urine Drug Testing for Federal Agencies,'' sets strict standards that laboratories must meet in order to conduct drug and specimen validity tests on urine specimens for Federal agencies. To become certified, an applicant laboratory must undergo three rounds of performance testing plus an on-site inspection. To maintain that certification, a laboratory must participate in a quarterly performance testing program plus undergo periodic, on-site inspections.

Laboratories which claim to be in the applicant stage of certification are not to be considered as meeting the minimum requirements described in the HHS Mandatory Guidelines. A laboratory must have its letter of certification from HHS/SAMHSA (formerly: HHS/NIDA) which attests that it has met minimum standards.

In accordance with Subpart C of the Mandatory Guidelines dated April 13, 2004 (69 FR 19644), the following laboratories meet the minimum standards to conduct drug and specimen validity tests on urine specimens:

ACL Laboratories, 8901 W. Lincoln Ave., West Allis, WI 53227, 414–328–7840 / 800–877–7016, (*Formerly:* Bayshore Clinical Laboratory).

ACM Medical Laboratory, Inc., 160 Elmgrove Park, Rochester, NY 14624, 585–429–2264.

Advanced Toxicology Network, 3560 Air Center Cove, Suite 101, Memphis, TN 38118, 901–794–5770 / 888–290–1150.

Aegis Sciences Corporation, 345 Hill Ave., Nashville, TN 37210, 615–255–2400, (*Formerly:* Aegis Analytical Laboratories, Inc.).

Baptist Medical Center-Toxicology Laboratory, 9601 I–630, Exit 7, Little Rock, AR 72205–7299, 501–202–2783, (*Formerly:* Forensic Toxicology Laboratory Baptist Medical Center).

Clinical Reference Lab, 8433 Quivira Road, Lenexa, KS 66215–2802, 800–445–6917.

Diagnostic Services, Inc., dba DSI, 12700 Westlinks Drive, Fort Myers, FL 33913, 239–561–8200 / 800–735–5416.

Doctors Laboratory, Inc., 2906 Julia Drive, Valdosta, GA 31602, 229–671–2281.

DrugScan, Inc., P.O. Box 2969, 1119 Mearns Road, Warminster, PA 18974, 215–674–9310.

Dynacare Kasper Medical Laboratories,* 10150–102 St., Suite 200, Edmonton, Alberta, Canada T5J 5E2, 780–451–3702 / 800–661–9876.

ElSohly Laboratories, Inc., 5 Industrial Park Drive, Oxford, MS 38655, 662–236–2609.

Gamma-Dynacare Medical Laboratories,* A Division of the Gamma-Dynacare Laboratory Partnership, 245 Pall Mall Street, London, ONT, Canada N6A 1P4, 519–679–1630.

Kroll Laboratory Specialists, Inc., 1111 Newton St., Gretna, LA 70053, 504–361–8989/800–433–3823, (*Formerly:* Laboratory Specialists, Inc.).

Kroll Laboratory Specialists, Inc., 450 Southlake Blvd., Richmond, VA 23236, 804–378–9130, (*Formerly:* Scientific Testing Laboratories, Inc.; Kroll Scientific Testing Laboratories, Inc.).

Laboratory Corporation of America Holdings, 7207 N. Gessner Road, Houston, TX 77040, 713–856–8288 / 800–800–2387.

Laboratory Corporation of America Holdings, 69 First Ave., Raritan, NJ 08869, 908–526–2400 / 800–437–4986, (Formerly: Roche Biomedical Laboratories, Inc.).

Laboratory Corporation of America Holdings, 1904 Alexander Drive, Research Triangle Park, NC 27709, 919–572–6900 / 800–833–3984, (*Formerly:* LabCorp Occupational Testing Services, Inc., CompuChem Laboratories, Inc.; CompuChem Laboratories, Inc., A Subsidiary of Roche Biomedical Laboratory; Roche CompuChem Laboratories, Inc., A Member of the Roche Group).

Laboratory Corporation of America Holdings, 13112 Evening Creek Drive, Suite 100, San Diego, CA 92128, 858–668–3710 / 800–882–7272, (*Formerly:* Poisonlab, Inc.).

Laboratory Corporation of America Holdings, 550 17th Ave., Suite 300, Seattle, WA 98122, 206–923–7020 / 800–898–0180, (*Formerly:* DrugProof, Division of Dynacare/Laboratory of Pathology, LLC; Laboratory of Pathology of Seattle, Inc.; DrugProof, Division of Laboratory of Pathology of Seattle, Inc.).

Laboratory Corporation of America Holdings, 1120 Main Street, Southaven, MS 38671, 866–827–8042 / 800–233–6339, (*Formerly:* LabCorp Occupational Testing Services, Inc.; MedExpress/National Laboratory Center).

LabOne, Inc. d/b/a Quest Diagnostics, 10101 Renner Blvd., Lenexa, KS 66219, 913–888–3927 / 800–873–8845, (*Formerly:* Quest Diagnostics Incorporated; LabOne, Inc.; Center for Laboratory Services, a Division of LabOne, Inc.).

MAXXAM Analytics Inc.,* 6740 Campobello Road, Mississauga, ON, Canada L5N 2L8, 905–817–5700, (*Formerly:* NOVAMANN (Ontario), Inc.).

MedTox Laboratories, Inc., 402 W. County Road D, St. Paul, MN 55112, 651–636–7466 / 800–832–3244.

MetroLab-Legacy Laboratory Services, 1225 NE 2nd Ave., Portland, OR 97232, 503–413–5295 / 800–950–5295.

Minneapolis Veterans Affairs Medical Center, Forensic Toxicology Laboratory, 1 Veterans Drive, Minneapolis, MN 55417, 612–725–2088.

National Toxicology Laboratories, Inc., 1100 California Ave., Bakersfield, CA 93304, 661–322–4250 / 800–350–3515.

One Source Toxicology Laboratory, Inc., 1213 Genoa-Red Bluff, Pasadena, TX 77504, 888–747–3774, (*Formerly:* University of Texas Medical Branch, Clinical Chemistry Division; UTMB Pathology-Toxicology Laboratory).

Oregon Medical Laboratories, 123 International Way, Springfield, OR 97477, 541–341–8092.

Pacific Toxicology Laboratories, 9348 DeSoto Ave., Chatsworth, CA 91311, 800–328–6942, (*Formerly:* Centinela Hospital Airport Toxicology Laboratory).

Pathology Associates Medical Laboratories, 110 West Cliff Dr., Spokane, WA 99204, 509–755–8991 / 800–541–7891x7.

Phamatech, Inc., 10151 Barnes Canyon Road, San Diego, CA 92121, 858–643–5555.

Physicians Reference Laboratory, 7800 West 110th St., Overland Park, KS 66210, 913–339–0372 / 800–821–3627.

Quest Diagnostics Incorporated, 3175 Presidential Dr., Atlanta, GA 30340, 770–452–1590 / 800–729–6432, (*Formerly:* SmithKline Beecham Clinical Laboratories; SmithKline Bio-Science Laboratories).

Quest Diagnostics Incorporated, 400 Egypt Road, Norristown, PA 19403, 610–631–4600 / 877–642–2216, (*Formerly:* SmithKline Beecham Clinical Laboratories; SmithKline Bio-Science Laboratories).

Quest Diagnostics Incorporated, 7600 Tyrone Ave., Van Nuys, CA 91405, 866–370–6699 / 818–989–2521, (*Formerly:* SmithKline Beecham Clinical Laboratories).

S.E.D. Medical Laboratories, 5601 Office Blvd., Albuquerque, NM 87109, 505–727–6300 / 800–999–5227.

South Bend Medical Foundation, Inc., 530 N. Lafayette Blvd., South Bend, IN 46601, 574–234–4176 x276.

Southwest Laboratories, 4645 E. Cotton Center Boulevard, Suite 177, Phoenix, AZ 85040, 602–438–8507 / 800–279–0027.

Sparrow Health System, Toxicology Testing Center, St. Lawrence Campus, 1210 W. Saginaw, Lansing, MI 48915, 517–364–7400, (*Formerly:* St. Lawrence Hospital & Healthcare System),

St. Anthony Hospital Toxicology Laboratory, 1000 N. Lee St., Oklahoma City, OK 73101, 405–272–7052.

Toxicology & Drug Monitoring Laboratory, University of Missouri Hospital & Clinics, 301 Business Loop 70 West, Suite 208, Columbia, MO 65203, 573–882–1273.

Toxicology Testing Service, Inc., 5426 N.W. 79th Ave., Miami, FL 33166, 305–593–2260.

US Army Forensic Toxicology Drug Testing Laboratory, 2490 Wilson St., Fort George G. Meade, MD 20755–5235, 301–677–7085.

The following laboratory will be voluntarily withdrawing from the HHS National Laboratory Certification Program on November 30, 2007:

Marshfield Laboratories, Forensic Toxicology Laboratory, 1000 North Oak Ave., Marshfield, WI 54449, 715–389–3734 / 800–331–3734.

*The Standards Council of Canada (SCC) voted to end its Laboratory Accreditation Program for Substance Abuse (LAPSA) effective May 12, 1998. Laboratories certified through that program were accredited to conduct forensic urine drug testing as required by U.S. Department of Transportation (DOT) regulations. As of that date, the certification of those accredited Canadian laboratories will continue under DOT authority. The responsibility for conducting quarterly performance testing plus periodic on-site inspections of those LAPSA-accredited laboratories was transferred to the U.S. HHS, with the HHS' NLCP contractor continuing to have an active role in the performance testing and laboratory inspection processes. Other Canadian laboratories wishing to be considered for the NLCP may apply directly to the NLCP contractor just as U.S. laboratories do.

Upon finding a Canadian laboratory to be qualified, HHS will recommend that DOT certify the laboratory (**Federal Register**, July 16, 1996) as meeting the minimum standards of the Mandatory Guidelines published in the **Federal Register** on April 13, 2004 (69 FR 19644). After receiving DOT certification, the laboratory will be included in the monthly list of HHS-certified laboratories and participate in the NLCP certification maintenance program.

Elaine Parry,

Acting Director, Office of Program Services, SAMHSA.

[FR Doc. E7–23363 Filed 12–3–07; 8:45 am]

BILLING CODE 4162–20–P

DEPARTMENT OF HOMELAND SECURITY

Coast Guard

[USCG–2007–28578]

Collection of Information Under Review by Office of Management and Budget: OMB Control Number: 1625–0089

AGENCY: Coast Guard, DHS.

ACTION: Thirty-day notice requesting comments.

SUMMARY: In compliance with the Paperwork Reduction Act of 1995, this request for comments announces that the U.S. Coast Guard is forwarding one Information Collection Request (ICR), abstracted below, to the Office of Information and Regulatory Affairs (OIRA) of the Office of Management and Budget (OMB) requesting re-instatement, with change, of a previously-approved collection of information: 1625–0089, National Recreation Boating Survey. Our ICR describes the information we seek to collect from the public. Review and comments by OIRA ensure we only impose paperwork burdens commensurate with our performance of duties.

DATES: Please submit comments on or before January 3, 2008.

ADDRESSES: To make sure your comments and related material do not enter the Coast Guard docket [USCG–2007–29070] or are received by OIRA more than once, please submit them by only one of the following means:

(1) Electronic submission. (a) To Coast Guard docket at *http://www.regulations.gov*.

(b) To OIRA by e-mail to: *nlesser@omb.eop.gov*.

(2) Mail or Hand delivery. (a) To Docket Management Facility (M–30), U.S. Department of Transportation, West Building Ground Floor, Room W12–140, 1200 New Jersey Avenue, SE., Washington, DC 20590–0001. Hand deliver between the hours of 9 a.m. and 5 p.m., Monday through Friday, except Federal holidays. The telephone number is 202–366–9329.

(b) To OIRA, 725 17th Street, NW., Washington, DC 20503, to the attention of the Desk Officer for the Coast Guard.

(3) Fax. (a) To Docket Management Facility at 202–493–2251.

(b) To OIRA at 202–395–6566. To ensure your comments are received in time, mark the fax to the attention of Mr. Nathan Lesser, Desk officer for the Coast Guard.

The Docket Management Facility maintains the public docket for this notice. Comments and material received from the public, as well as documents mentioned in this notice as being available in the docket, will become part of this docket and will be available for inspection or copying at room W12–140 on the West Building Ground Floor, 1200 New Jersey Avenue, SE., Washington, DC, between 9 a.m. and 5 p.m., Monday through Friday, except Federal holidays. You may also find this docket on the Internet at *http://www.regulations.gov*.

A copy of the complete ICR is available through this docket on the Internet at *http://www.regulations.gov*. Additionally, copies are available from Commandant (CG–611), U.S. Coast Guard Headquarters, (Attn: Mr. Arthur Requina), 2100 2nd Street, SW., Washington, DC 20593–0001. The telephone number is (202) 475–3523.

FOR FURTHER INFORMATION CONTACT: Mr. Arthur Requina, Office of Information Management, telephone (202) 475–3523 or fax (202) 475–3929, for questions on these documents. Contact Ms. Renee V. Wright, Program Manager, Docket Operations, (202) 366–9826, for questions on the docket.

SUPPLEMENTARY INFORMATION:

The Coast Guard invites comments on the proposed collection of information to determine if it is necessary in the proper performance of Departmental functions. In particular, the Coast Guard would appreciate comments addressing: (1) The practical utility of the collection; (2) the accuracy of the estimated burden of the collection;

(3) ways to enhance the quality, utility, and clarity of information subject to the collection; and (4) ways to minimize the burden of collection on respondents, including the use of automated collection techniques or other forms of information technology.

Comments to the FDMS or OIRA must contain the OMB Control Number of the ICR addressed. Comments must contain the docket number of this request, [USCG 2007–28578]. For your comments to OIRA to be considered, it is best if they are received on or before the January 3, 2008.

Public participation and request for comments: We encourage you to respond to this request by submitting comments and related materials. We will post all comments received, without change, to *http://www.regulations.gov*. They will include any personal information you provide. We have an agreement with DOT to use their Docket Management Facility. Please see the paragraph on DOT's ''Privacy Act Policy'' below.

Submitting comments: If you submit a comment, please include the docket number [USCG–2007–28578], indicate the specific section of the document to which each comment applies, providing a reason for each comment. We recommend you include your name, mailing address, and an e-mail address or other contact information in the body of your document to ensure you can be identified as the submitter. This also allows us to contact you in the event further information is needed or if there are questions. For example, if we cannot read your submission. You may submit your comments and material by electronic means, mail, fax, or delivery to the Docket Management Facility at the address under **ADDRESSES**; but please submit them by only one means. If you submit them by mail or delivery, submit them in an unbound format, no larger than 8½ by 11 inches, suitable for copying and electronic filing. If you submit them by mail and would like to know that they reached the Facility, please enclose a stamped, self-addressed postcard or envelope. We will consider all comments and material received during the comment period. We may change the documents supporting this collection of information or even the underlying requirements in view of them.

Viewing comments and documents: Go to *http://www.regulations.gov* to view documents mentioned in this notice as being available in the docket. Click on ''Search for Dockets,'' and enter the docket number (USCG–2007–28578) in the Docket ID box, and click enter. You may also visit the Docket Management Facility in room W12–140 on the West Building Ground Floor, 1200 New Jersey Avenue, SE., Washington, DC, between 9 a.m. and 5 p.m., Monday through Friday, except Federal holidays.

Privacy Act: Anyone can search the electronic form of all comments received in dockets by the name of the individual submitting the comment (or signing the comment, if submitted on behalf of an association, business, labor union, etc.). You may review the Privacy Act Statement of DOT in the **Federal Register** published on April 11, 2000 (65 FR 19477), or you may visit *http://DocketsInfo.dot.gov*.

Previous Request for Comments

This request provides a 30-day comment period required by OIRA. The Coast Guard has published the 60-day notice (72 FR 38839, July 16, 2007) required by 44 U.S.C. 3506(c)(2). That notice elicited 12 comments.

The Coast Guard issued an OMB Information Collection supporting statement for its National Recreational Boating Survey for public comment on July 16, 2007. The proposed information collection activities are based on recommendations from a Scientific Advisory Committee (SAC) as well as a Collaboratory of Partners (COP), two groups that a grant recipient and the Coast Guard put in place to assist with the development of the National Recreational Boating Survey. The SAC was a group of methodologists whose role was to design the survey. The COP, on the other hand, was a collaboration involving groups such as various government agencies, boater associations, and the National Association of State Boating Law Administrators. The primary responsibility of the COP was to help Coast Guard define the content of its survey questionnaires.

We reviewed each of the comments received with diligence, and made some changes to our survey and its supporting statement where it was deemed appropriate. The present document provides a summary of public comments, our responses thereto, and changes made to the survey and its supporting statement.

1. General Supportive Comments

Several comments in support of the National Recreational Boating Survey indicated it has been substantially revised to reflect the need for more targeted data in response to the elements included in the National Recreational Boating Safety (RBS) Program's Strategic Plan, which calls for collection of participation/exposure data to develop reliable national/state-level measures of risk incidental to recreational boating. In fact, valid comparisons of injury or fatality rates across states or other geographic entities, which have always been of interest, require the use of participation/exposure data as a common base for calculating rates' denominators. This survey will make exposure data available to the boating community, in addition to collecting various other boating participation data broken down by boat type and length.

2. Weighting of Survey Data

One commenter, while supporting the proposed survey process and the idea of conducting it more frequently, indicated the suggested fixed number of 400 per state would not yield valid national estimates. The commenter's rationale is that the number of boats varies considerably per state, and some sort of data weighting is warranted. Another commenter pointed out the lack of discussion about weighting matters. We do not intend to obtain a fixed predetermined number of 400 respondents per state. Our intention is to obtain approximately 30,000 respondents from the mail survey of registered boat owners, and 20,000 respondents from the Random Digit Dialing (RDD) data collection targeting households that do not own a registered recreational vessel. Each of these surveys is based on stratified samples, with proportional allocation as described in the supporting statement for this survey. We agree with the commenter that the survey must be weighted to account for differential selection probabilities. We added an entire section in the supporting statement that provides a detailed description of the weighting process.

3. General Survey Design

One commenter expressed a concern that we did not adopt a rotating panel design for our National Recreational Boating Survey. The commenter stated the Coast Guard should justify its proposed continued use of an ''antiquated'' cross-sectional survey approach, which he feels will prevent the agency from obtaining useful and actionable data on net changes in how individuals alter their boating-related behaviors. Further, he opined that it will only allow for the estimation of gross flows (or changes).

We disagree with the commenter that cross-sectional surveys provide estimates of ''gross'' changes and not estimates of ''net''. The cross-sectional surveys we are planning will provide estimates of ''net'' changes needed to observe trends, and not ''gross'' estimates. A ''net'' change represents, for example, the difference in overall boating participation levels between two years (years 1 and 2); while a ''gross'' change quantifies specific movements of year 1 boaters (e.g. those who stopped this activity in year 2). Consequently, obtaining ''gross'' change estimates requires tracking of individual level adjustments over time, which has traditionally been achieved with panel surveys. States may conduct local panel studies to further look into the ''net''

changes revealed by Coast Guard's National Recreational Boating Survey. The use of a rotating panel design is primarily justified if a key objective of the survey program is to provide reliable information on ''gross'' as well as ''net'' changes. That is not the case with the National Recreational Boating Survey. Nevertheless, we added a section in the supporting statement that discusses the issue of change estimation to provide a better justification of the proposed design.

4. Dual-Frame Issues

One commenter raised a concern about the use of the dual-frame approach, and how sample data collected by telephone will be compared to or combined with the mail survey data. The commenter would like us to explain the handling of the overlap between the two approaches and justify the use of two sampling frames.

In states that will provide boat registration data, we will implement a dual-frame survey with two separate components:

- The first component is a mail survey of households with a member who owns a registered recreational vessel.
- The second component is an RDD survey of boating households with no registered recreational vessel owner.

The mail survey using registration data is an effective way to collect the desired boating data with the possibility of targeting users of a particular type of watercraft. However, users of unregistered vessels constitute a significant portion of the boating population. Although some unregistered vessel users and owners are in households that also own registered vessels and are therefore included in the mail survey target population, a sizeable number are believed to reside without owning any registered recreational vessel. Since the mail survey does not cover households that do not own a registered vessel, an RDD household survey must be conducted to target them. The RDD sample will be screened, and a sufficiently large sample of boating households with no registered boat will be interviewed. It is a well known fact that the dual-frame approach can be highly efficient for surveying rare populations. For example, obtaining statistics on personal watercrafts could be difficult if one has to rely solely on a random national sample of households. Using the state boat registration data, one can target specific boats more effectively. As far as combining data from the mail and RDD surveys is concerned, we will weight the units of analysis from each component independently and obtain national/state level estimates by calculating the sums.

In states that will not provide boat registration data, the National Recreational Boating Survey will be based exclusively on an RDD sample; households, boats, and boaters will be weighted accordingly. National-level estimates will be obtained by summing all corresponding state-level estimates.

5. Mail Survey's Response Rates

A commenter indicated the projected response rate of 35 percent for the mail survey is unduly low and cannot be expected to yield valid estimates. He also stressed that some states will not provide any boat registration data to the Coast Guard, leading to a poor and incomplete sampling frame. Other concerns were also raised, ranging from not referencing Dr. Dillman's works on survey response rate improvement to failing to discuss standardization. For the 2002 National Recreational Boating Survey, the response rate of the mail survey was 49 percent, while that conducted telephonically was more than 61 percent. We anticipate higher response rates in 2007 due to a increased data collection budget, and a more systematic approach for converting non respondents. Our estimate of 35 percent represents the response rate with respect to the number of initial contacts, which include eligible as well as ineligible households. Survey response rates as defined by the American Association for Public Opinion Research (AAPOR) are calculated with respect to the number of eligible sample units. For the purpose of quantifying the response burden, we used a response rate with respect to the initial contacts (many of which are ineligible), and deliberately decided to adopt a conservative approach by minimizing our projections. When calculated with respect to the eligible sample size, the response rate will be higher. Based on past experience, we believe the proposed approach for reducing non-response will be effective. Concerning the standardization of studies, we believe some flexibility must be given to the data collection contractor implementation of specific protocols to improve survey response rates, and, not provide very detailed specifications to achieve this goal.

6. Survey Questionnaires

- A commenter suggested the tabularized format of some questions may lead different survey vendors to translate questions into different Computer-Assisted Telephone Interview (CATI) questions. When developing the survey questionnaires, our goal was not to write detailed specifications for a CATI programmer. Our primary objective was to provide questionnaires that are sufficiently clear for any CATI programmer to understand the exact nature of data items to be collected. Moreover, different CATI programmers may organize questions in different ways without it being problematic so long as the data item needed is properly collected.
- A commenter suggested the timeframe for collecting the data should be from October of the initial year to September of the following year, which will supposedly reduce the recall bias. We are not aware of any study which would support the commenter's statement.
- The commenter indicated the survey questionnaires are flawed based on the following issues:
- The absence of ''Don't know'' or ''Refusal'' options in the yes/no questions;
- The number of household members listed on the questionnaire; and
- The special order in which household members are listed.

We appreciate these comments and will work with selected contractors to address these concerns. The proposed survey questionnaire is not to be seen as a detailed specification memorandum to be sent by mail to a CATI programmer, but, should rather be considered as a document that will be explained and discussed with the data collection contractor.

Concerning question 5 of the screener questionnaire for states not sharing registration data, an answer (yes or no) is mandatory since that information is used to determine eligibility for the detailed survey. Therefore the ''Don't know'' option is unacceptable. The interviewer may need to talk to a more knowledgeable person if necessary. For those survey questions we can modify prior to selecting the contractor, we did so. Here are the changes:

- Concerning the collection of data on ethnicity, we have modified the questionnaires to comply with OMB standards.
- In the screener and detailed questionnaires, an adult is now defined as someone aged 16 or older. This modification was made following a comment by the same commenter.
- The number of home-use telephone numbers in the household is now collected.
- A commenter raised concerns about the pre-testing of the questionnaires. The National Recreational Boating Survey was last conducted in 2002, and many questions in the 2007

questionnaire were taken and thoroughly tested. The other questions in the 2007 questionnaire not used in the 2002 version were also used on several occasions by various boating researchers to collect subject data. The collection contractor is expected to conduct a limited pre-test to identify possible unforeseen problems.

7. Data Analysis

A commenter indicated that very little was said in the supporting statement about how the data collection contractor will analyze the data. In response to this comment, we expanded the data analysis section to show how national, state, and regional estimates will be calculated. However, the contractor will essentially provide the Coast Guard with basic contingency tables showing weighted counts describing various aspects of the boating population and their activities during 2007. We may conduct further analyzes internally after receiving the micro-data file.

Information Collection Request

Title: National Recreational Boating Survey.

OMB Control Number: 1625–0089.

Type of Request: Reinstatement, with change, of a previously approved collection for which approval has expired.

Affected Public: Recreational boating participants and owners of recreational vessels.

Abstract: The Federal Boat Safety Act of 1971 determined the framework of the Coast Guard RBS program. This program as set forth in 46 U.S.C., Chapter 131, requires the Coast Guard to ''encourage greater state participation and uniformity in boating safety efforts, and particularly to permit the states to assume the greater share of boating safety education, assistance, and enforcement activities.'' See 46 U.S.C. 13101. The Coast Guard Office of Boating Safety achieves these goals by providing timely and relevant information on activities that occur in each respective jurisdiction. The boating information provided by the Coast Guard enables each state agency to tailor and implement safety initiatives addressing specific needs of boaters in local jurisdictions. The primary objective of this collection is to provide the Coast Guard with the required information in a format suitable to effectively manage the program.

Burden Estimate: This is a biennial requirement. In the year the survey is conducted, the burden is estimated to be 67,619 hours.

Dated: November 26, 2007.

D.T. Glenn,

Rear Admiral, U.S. Coast Guard, Assistant Commandant for Command, Control, Communications, Computers and Information Technology.

[FR Doc. E7–23401 Filed 12–3–07; 8:45 am]

BILLING CODE 4910–15–P

DEPARTMENT OF HOMELAND SECURITY

Transportation Security Administration

[Docket Nos. TSA–2006–24191; Coast Guard—2006–24196]

Transportation Worker Identification Credential (TWIC); Enrollment Dates for the Ports of Tulsa, OK and Albany, NY

AGENCY: Transportation Security Administration; United States Coast Guard; DHS.

ACTION: Notice.

SUMMARY: The Department of Homeland Security (DHS) through the Transportation Security Administration (TSA) issues this notice of the dates for the beginning of the initial enrollment for the Transportation Worker Identification Credential (TWIC) for the Ports of Tulsa, OK and Albany, NY.

DATES: TWIC enrollment in Tulsa, OK will begin on December 12, 2007, and in Albany, NY on December 13, 2007.

ADDRESSES: You may view published documents and comments concerning the TWIC Final Rule, identified by the docket numbers of this notice, using any one of the following methods.

(1) Searching the Federal Docket Management System (FDMS) Web page at *http://www.regulations.gov*;

(2) Accessing the Government Printing Office's Web page at *http://www.gpoaccess.gov/fr/index.html*; or

(3) Visiting TSA's Security Regulations Web page at *http://www.tsa.gov* and accessing the link for ''Research Center'' at the top of the page.

FOR FURTHER INFORMATION CONTACT: James Orgill, TSA–19, Transportation Security Administration, 601 South 12th Street, Arlington, VA 22202–4220. Transportation Threat Assessment and Credentialing (TTAC), TWIC Program, (571) 227–4545; e-mail: *credentialing@dhs.gov*.

Background

The Department of Homeland Security (DHS), through the United States Coast Guard and the Transportation Security Administration (TSA), issued a joint final rule (72 FR 3492; January 25, 2007) pursuant to the Maritime Transportation Security Act (MTSA), Public Law 107–295, 116 Stat. 2064 (November 25, 2002), and the Security and Accountability for Every Port Act of 2006 (SAFE Port Act), Public Law 109–347 (October 13, 2006). This rule requires all credentialed merchant mariners and individuals with unescorted access to secure areas of a regulated facility or vessel to obtain a TWIC. In this final rule, on page 3510, TSA and Coast Guard stated that a phased enrollment approach based upon risk assessment and cost/benefit would be used to implement the program nationwide, and that TSA would publish a notice in the **Federal Register** indicating when enrollment at a specific location will begin and when it is expected to terminate.

This notice provides the start date for TWIC initial enrollment at the Ports of Tulsa, OK and Albany, NY. Enrollment in Tulsa will begin on December 12, 2007, and in Albany, NY on December 13, 2007. The Coast Guard will publish a separate notice in the **Federal Register** indicating when facilities within the Captain of the Port Zone Lower Mississippi, including those in the Port of Tulsa, and Captain of the Port Zone New York, including those in the Port of Albany must comply with the portions of the final rule requiring TWIC to be used as an access control measure. That notice will be published at least 90 days before compliance is required.

To obtain information on the pre-enrollment and enrollment process, and enrollment locations, visit TSA's TWIC Web site at *http://www.tsa.gov/twic*.

Issued in Arlington, Virginia, on November 28, 2007.

Stephen Sadler,

Director, Maritime and Surface Credentialing, Office of Transportation Threat Assessment and Credentialing, Transportation Security Administration.

[FR Doc. E7–23522 Filed 12–3–07; 8:45 am]

BILLING CODE 9110–05–P

DEPARTMENT OF THE INTERIOR

Fish and Wildlife Service

Charles M. Russell National Wildlife Refuge and UL Bend National Wildlife Refuge, Montana

AGENCY: Fish and Wildlife Service, Interior.

ACTION: Notice of intent to prepare a comprehensive conservation plan and environmental impact statement; request for comments.

SUMMARY: This notice advises that we, the U.S. Fish and Wildlife Service

(Service), intend to gather information necessary to prepare a comprehensive conservation plan (plan) and environmental impact statement (EIS) for the Charles M. Russell National Wildlife Refuge, including UL Bend National Wildlife Refuge (UL Bend is a refuge within a refuge), located in north-central Montana. We are furnishing this notice in compliance with Service Refuge Planning policy to advise other agencies and the public of our intentions, and to obtain suggestions and information on the scope of issues to be considered in the planning process.

DATES: Written comments must be received by February 4, 2008.

ADDRESSES: Comments and requests for more information regarding the Charles M. Russell National Wildlife Refuge or UL Bend National Wildlife Refuge should be sent to Laurie Shannon, Planning Team Leader, Division of Refuge Planning, P.O. Box 25486, Denver Federal Center, Denver, Colorado 80225.

FOR FURTHER INFORMATION CONTACT: Laurie Shannon, 303–236–4317; or *Laurie_Shannon@fws.gov*; or John Esperance, Chief, Branch of Comprehensive Conservation Planning, 303–236–4369.

SUPPLEMENTARY INFORMATION: The Service has initiated the Plan and EIS for the Charles M. Russell National Wildlife Refuge (NWR) and UL Bend NWR with headquarters in Lewistown, Montana.

The Charles M. Russell NWR and UL Bend NWR extend west 125 miles along the Missouri River from Fort Peck Dam in north-central Montana. The Refuges contain approximately 1,100,000 acres including the Fort Peck Reservoir. Habitat includes native prairie, forested coulees, river bottoms, and badlands. Wildlife is as diverse as the topography, and common species include elk, mule deer, Rocky Mountain bighorn sheep, pronghorn antelope, sharp-tailed grouse, prairie dogs, and over 236 species of birds. The Refuges are located within Fergus, Garfield, Petroleum, Phillips, McCone, and Valley Counties.

In 1936, President Franklin D. Roosevelt signed Executive Order 7509 establishing the Fort Peck Game Range and providing ''That the natural forage resources therein shall be first utilized for the purpose of sustaining in a healthy condition a maximum of four hundred thousand (400,000) sharp-tail grouse, and one thousand five hundred (1,500) antelope, the primary species, and such nonpredatory secondary species in such numbers as may be necessary to maintain a balanced wildlife population, but in no case shall the consumption of forage by the combined population of the wildlife species be allowed to increase the burden of the range dedicated to the primary species: *Provided further,* That all the resources within this range or preserve shall be available, except as herein otherwise provided with respect to wildlife, for domestic livestock * * * *And provided further,* That land within the exterior limits of the area herein described * * * may be utilized for public grazing purposes only to the extent as may be determined by the said Secretary (Agriculture) to be compatible with the utilization of said lands for the purposes for which they were acquired * * *.''

Originally, the game range was administered jointly by secretaries for the Departments of Agriculture (the Service was the Bureau of Biological Survey under Department of Agriculture until 1939) and Interior. On February 25, 1963, the Fort Peck Game Range was redesignated the Charles M. Russell National Wildlife Range by Public Land Order 2951. On March 25, 1969, Public Land Order 4588 established UL Bend National Wildlife Refuge on approximately 39,456 acres in Phillips County and revoked Executive Order 7509 on those lands. On October 19, 1976, Public Law 94–557 (90 Stat 2633–2634), designated approximately 28,890 acres in UL Bend as the UL Bend Wilderness. On February 27, 1976, the administrative status of Charles M. Russell and all other game ranges in the nation was changed by the signing of Public Law 94–223 (90 Stat. 199), commonly called the Game Range Act, which brought to a close the joint management between the Bureau of Land Management and the Service and vested management authority of Charles M. Russell NWR with the Service. Public Land Order 5635 (1978) changed the name of the game refuge to Charles M. Russell National Wildlife Refuge and clarified the administration and management of the Refuge under the National Wildlife Refuge System Administration Act of 1966 (16 U.S.C 668dd–668ee). Additional legislation and mandates exist between the Service and the U.S. Army Corps of Engineers for the operation of the Fort Peck Dam and Reservoir.

Each unit of the National Wildlife Refuge System, including the Charles M. Russell and UL Bend NWRs, has specific purposes for which it was established and for which legislation was enacted.

Those purposes are used to develop and prioritize management goals and objectives within the National Wildlife Refuge System mission, and to guide which public uses will occur on these Refuges. The planning process is a way for the Service and the public to evaluate management goals and objectives for the best possible conservation efforts of this important wildlife habitat while providing for wildlife-dependent recreation opportunities that are compatible with the Refuges' establishing purposes and the mission of the National Wildlife Refuge System.

The Service will conduct a comprehensive conservation planning process that will provide opportunity for tribal, State, and local governments; Federal and State agencies; organizations; and the public to participate in issue scoping and public comment. The Service is requesting input for issues, concerns, ideas, and suggestions for the future management of the Charles M. Russell and UL Bend NWRs. Anyone interested in providing input is invited to respond to the following three questions.

(1) What do you value most about the Charles M. Russell and UL Bend National Wildlife Refuges?

(2) What problems or issues do you want to see addressed in the CCP?

(3) What changes, if any, would you like to see in the management of the Charles M. Russell and UL Bend National Wildlife Refuges?

The Service has provided the above questions for your optional use. The planning team developed these questions to facilitate finding out more information about individual issues and ideas concerning these two units of the National Wildlife Refuge System. Comments received by the planning team will be used as part of the planning process; individual comments will not be referenced in our reports or responded to directly.

An opportunity will be given to the public to provide input at open houses to scope issues and concerns (schedules can be obtained from the planning team leader at the address listed above). Comments may be submitted anytime during the planning process by writing to that address. Before including your address, phone number, e-mail, or other personal identifying information in your comment, you should be aware that your entire comment, including your personal identifying information, may be made publicly available at any time. While you can ask us in your comment to withhold your personal identifying information from public review, we cannot guarantee that we will be able to do so.

The Environmental Review of this project will be conducted in accordance

with the requirements of the National Environmental Policy Act (NEPA) of 1969, as amended (42 U.S.C. 4321 et seq.); NEPA Regulations (40 CFR parts 1500–1508); other appropriate Federal laws and regulations; and Service policies and procedures for compliance with those laws and regulations. All comments received from individuals on Service Environmental Assessments and Environmental Impact Statements become part of the official public record. Requests for such comments will be handled in accordance with the Freedom of Information Act, NEPA (40 CFR 1506.6(f)), and other Departmental and Service policies and procedures.

Dated: November 27, 2007.

Stephen Guertin,

Acting Regional Director.

[FR Doc. E7–23467 Filed 12–3–07; 8:45 am]

BILLING CODE 4310–55–P

DEPARTMENT OF THE INTERIOR

Fish and Wildlife Service

Receipt of Applications for Permit

AGENCY: Fish and Wildlife Service, Interior.

ACTION: Notice of receipt of applications for permit.

SUMMARY: The public is invited to comment on the following applications to conduct certain activities with endangered species and/or marine mammals.

DATES: Written data, comments or requests must be received by January 3, 2008.

ADDRESSES: Documents and other information submitted with these applications are available for review, subject to the requirements of the Privacy Act and Freedom of Information Act, by any party who submits a written request for a copy of such documents within 30 days of the date of publication of this notice to: U.S. Fish and Wildlife Service, Division of Management Authority, 4401 North Fairfax Drive, Room 700, Arlington, Virginia 22203; fax 703/358–2281.

FOR FURTHER INFORMATION CONTACT: Division of Management Authority, telephone 703/358–2104.

SUPPLEMENTARY INFORMATION:

Endangered Species

The public is invited to comment on the following applications for a permit to conduct certain activities with endangered species. This notice is provided pursuant to section 10(c) of the Endangered Species Act of 1973, as amended (16 U.S.C. 1531 *et seq.*). Written data, comments, or requests for copies of these complete applications should be submitted to the Director (address above).

Applicant: National Institutes of Health/National Cancer Institute, Frederick, MD, PRT–694126.

The applicant requests renewal of their permit to import biological samples from wild, captive-held, and/or captive-born endangered mammals for the purpose of scientific research. This notification covers activities to be conducted by the applicant over a five-year period.

Applicant: Carl W. Swensen, Island Heights, NJ, PRT–167027.

The applicant requests a permit to import the sport-hunted trophy of one male bontebok (*Damaliscus pygargus pygargus*) culled from a captive herd maintained under the management program of the Republic of South Africa, for the purpose of enhancement of the survival of the species.

Applicant: Alex R. Stowe, Jr., Plano, TX, PRT–167253.

The applicant requests a permit to import the sport-hunted trophy of one male bontebok (*Damaliscus pygargus pygargus*) culled from a captive herd maintained under the management program of the Republic of South Africa, for the purpose of enhancement of the survival of the species.

Applicant: Jeffrey S. Sorg, Kalispell, MT, PRT–167302.

The applicant requests a permit to import the sport-hunted trophy of one male bontebok (*Damaliscus pygargus pygargus*) culled from a captive herd maintained under the management program of the Republic of South Africa, for the purpose of enhancement of the survival of the species.

Endangered Marine Mammals and Marine Mammals

The public is invited to comment on the following applications for a permit to conduct certain activities with endangered marine mammals and/or marine mammals. The applications were submitted to satisfy requirements of the Endangered Species Act of 1973, as amended (16 U.S.C. 1531 *et seq.*) and/or the Marine Mammal Protection Act of 1972, as amended (16 U.S.C. 1361 *et seq.*), and the regulations governing endangered species (50 CFR part 17) and/or marine mammals (50 CFR part 18). Written data, comments, or requests for copies of the complete applications or requests for a public hearing on these applications should be submitted to the Director (address above). Anyone requesting a hearing should give specific reasons why a hearing would be appropriate. The holding of such a hearing is at the discretion of the Director.

Applicant: Detroit Zoological Society, Detroit, MI, PRT–160107.

The applicant requests a permit for permanent placement of one non-releasable male polar bear (*Ursus maritimus*) for the purpose of public display. The animal was recovered as an orphaned cub in Alaska in 1988. The Service has determined that this animal does not demonstrate the skills and abilities needed to survive in the wild.

Applicant: Florida Fish and Wildlife Conservation Commission, Fish and Wildlife Research Institute, St. Petersburg, FL, PRT–773494.

The applicant requests renewal and amendment of their permit to capture, tag, drug, collect biological specimens, photograph, aerial survey, and harass Florida manatees (*Trichechus manatus*) and to import, export, and re-export biological specimens from all manatees (*T. manatus, T. inunguis,* and *T. senegalensis*) and dugongs (*Dugong dugon*) for the purpose of scientific research. This notification covers activities to be conducted by the applicant over a five-year period.

Concurrent with the publication of this notice in the **Federal Register**, the Division of Management Authority is forwarding copies of the above applications to the Marine Mammal Commission and the Committee of Scientific Advisors for their review.

Dated: November 9, 2007.

Lisa J. Lierheimer,

Senior Permit Biologist, Branch of Permits, Division of Management Authority.

[FR Doc. E7–23494 Filed 12–3–07; 8:45 am]

BILLING CODE 4310–55–P

DEPARTMENT OF THE INTERIOR

Fish and Wildlife Service

Issuance of Permits

AGENCY: Fish and Wildlife Service, Interior.

ACTION: Notice of issuance of permits for endangered species and/or marine mammals.

SUMMARY: The following permits were issued.

ADDRESSES: Documents and other information submitted with these applications are available for review, subject to the requirements of the Privacy Act and Freedom of Information Act, by any party who submits a written request for a copy of such documents to: U.S. Fish and Wildlife Service, Division of Management Authority, 4401 North

Fairfax Drive, Room 700, Arlington, Virginia 22203; fax 703/358–2281.

FOR FURTHER INFORMATION CONTACT: Division of Management Authority, telephone 703/358–2104.

SUPPLEMENTARY INFORMATION: Notice is hereby given that on the dates below, as authorized by the provisions of the Endangered Species Act of 1973, as amended (16 U.S.C. 1531 *et seq.*), and/or the Marine Mammal Protection Act of 1972, as amended (16 U.S.C. 1361 *et seq.*), the Fish and Wildlife Service issued the requested permits subject to certain conditions set forth therein. For each permit for an endangered species, the Service found that (1) the application was filed in good faith, (2) the granted permit would not operate to the disadvantage of the endangered species, and (3) the granted permit would be consistent with the purposes and policy set forth in Section 2 of the Endangered Species Act of 1973, as amended.

Permit No.	Applicant	Receipt of application **Federal Register** notice	Permit issuance date
		Endangered Species	
149514	Feld Entertainment, Inc	72 FR 56785, October 4, 2007	Nov. 7, 2007.
154550	Alan W. Maki	72 FR 52905; September 17, 2007	Oct. 24, 2007.
154885	Brian R. Busch	72 FR 33242; June 15, 2007	Oct. 23, 2007.
154886	James E. Phares	72 FR 33242; June 15, 2007	Oct. 23, 2007.
		Marine Mammals	
157656	Thomas M. Sharko	72 FR 39829; July 20, 2007	Nov. 2, 2007.

Dated: November 9, 2007.

Lisa J. Lierheimer,

Senior Permit Biologist, Branch of Permits, Division of Management Authority.

[FR Doc. E7–23495 Filed 12–3–07; 8:45 am]

BILLING CODE 4310–55–P

DEPARTMENT OF THE INTERIOR

Fish and Wildlife Service

Receipt of Application for Approval

AGENCY: Fish and Wildlife Service, Interior.

ACTION: Notice of receipt of application for approval; request for comment.

SUMMARY: The public is invited to comment on the following application for approval to conduct certain activities with birds that are protected in accordance with the Wild Bird Conservation Act of 1992.

DATES: Written data, comments, or requests for a copy of this application must be received by January 3, 2008.

ADDRESSES: Documents and other information submitted with this application are available for review, subject to the requirements of the Privacy Act and Freedom of Information Act, by any party who submits a written request for a copy of such documents within 30 days of the date of publication of this notice to: Chief, U.S. Fish and Wildlife Service, Division of Management Authority, 4401 North Fairfax Drive, Room 212, Arlington, VA 22203; fax 703/358–2298.

FOR FURTHER INFORMATION CONTACT: Craig Hoover, Chief, Branch of Operations, Division of Management Authority, at 703–358–2095.

SUPPLEMENTARY INFORMATION: The public is invited to comment on the following application for approval to conduct certain activities with bird species covered under the Wild Bird Conservation Act of 1992. This notice is provided pursuant to Section 112(4) of the Wild Bird Conservation Act of 1992, 50 CFR 15.26(c). Written data, comments, or requests for copies of this complete application should be submitted to the Chief (address above).

Applicant: Mr. Franklin A. Smith, Plant City, FL.

The applicant wishes to establish a cooperative breeding program for green-winged king-parrot (*Alisterus chloropterus chloropterus*), Australian king-parrot (*Alisterus scapularis*), Twenty-eight parakeet (*Barnardius zonarius semitorquatus*), Port Lincoln parakeet (*Barnardius zonarius zonarius*), bluebonnet parakeet (*Northiella haematogaster*), moustached parakeet (*Psittacula alexandri alexandri*), emerald-collared parakeet (*Psittacula calthorpae*), Malabar parakeet (*Psittacula columboides*), plum-headed parakeet (*Psittacula cyanocephala*), and slaty-headed parakeet (*Psittacula himalayana himalayana*). The applicant wishes to be an active participant in this program along with four other individuals.

Before including your address, phone number, e-mail address, or other personal identifying information in your comment, you should be aware that your entire comment—including your personal identifying information—may be made publicly available at any time. While you can ask us in your comment to withhold your personal identifying information from public review, we cannot guarantee that we will be able to do so.

Dated: November 9, 2007.

Craig Hoover,

Chief, Branch of Operations, Division of Management Authority.

[FR Doc. E7–23500 Filed 12–3–07; 8:45 am]

BILLING CODE 4310–55–P

DEPARTMENT OF THE INTERIOR

Bureau of Land Management

[MTM 21943]

Notice of Proposed Withdrawal Extension and Opportunity for Public Meeting; Montana

AGENCY: Bureau of Land Management, Interior.

ACTION: Notice.

SUMMARY: On behalf of the U.S. Department of Agriculture (USDA), Forest Service, the Secretary of the Interior proposes to extend Public Land Order No. 6669 for an additional 20-year period. The order withdrew National Forest System land from mining to protect the Lincoln Gulch Historic Site. This notice also gives an opportunity to comment on the proposed action and to request a public meeting. The land has been and will remain open to the appropriate forms of surface entry and mineral leasing.

DATES: Comments and requests for a public meeting must be received by March 3, 2008.

ADDRESSES: Comments and meeting requests should be sent to the Regional Forester, U.S. Forest Service, Region 1, P.O. Box 7669, Missoula, Montana 59807, or the Montana State Director, Bureau of Land Management, 5001 Southgate Drive, Billings, Montana 59101–4669.

FOR FURTHER INFORMATION CONTACT: Scott Bixler, U.S. Forest Service, Region 1, P.O. Box 7669, Missoula, Montana 59807, 406–329–3655, or Sandra Ward, Bureau of Land Management, Montana State Office, 5001 Southgate Drive, Billings, Montana 59101–4669, 406–896–5052.

SUPPLEMENTARY INFORMATION: The withdrawal created by PLO No. 6669 (53FR9628, March 24, 1988) will expire March 23, 2008, unless extended. The USDA, Forest Service, has filed an application to extend Public Land Order No. 6669 for an additional 20-year period. An extension, if approved, would continue the withdrawal of National Forest System land from location or entry under the United States mining laws, subject to valid existing rights, and would continue protection of the historic archeological site, artifacts, and cemetery on the following-described land:

Principal Meridian, Montana

T. 14 N., R. 9 W.
Sec. 8, W½SE¼NW¼, W½NE¼SW¼, SE¼SW¼, and SW¼SW¼SE¼.

The area described contains 90 acres in Lewis and Clark County.

The purpose of the proposed extension is to continue the withdrawal created by PLO No. 6669 for an additional 20-year term to protect the historic archeological site, artifacts, and cemetery.

As extended, the withdrawal would not alter the applicability of those public land laws governing the use of National Forest System lands under lease, license, or permit or governing the disposal of the mineral or vegetative resources other than under the mining laws.

The use of a right-of-way or interagency or cooperative agreement would not adequately protect the historic area.

There are no suitable alternative sites available. There are no other federal lands in the area containing these historic resources and cemetery.

No water will be needed to fulfill the purpose of the requested withdrawal extension.

For a period of 90 days from the date of publication of this notice, all persons who wish to submit comments, suggestions, or objections in connection with the proposed withdrawal extension may present their views in writing to the Montana State Director, Bureau of Land Management, at the address noted above.

Comments, including names and street addresses of respondents, will be available for public review at the Bureau of Land Management, Montana State Office, at the address noted above during regular business hours 8 a.m. to 4:30 p.m., Monday through Friday, except holidays. Before including your address, phone number, e-mail address, or other personal identifying information in your comments, be advised that your entire comment—including your personal identifying information—may be made publicly available at any time. While you can ask us in your comment to withhold from public review your personal identifying information, we cannot guarantee that we will be able to do so. Notice is hereby given that an opportunity for a public meeting is afforded in connection with the proposed withdrawal extension. All interested persons who desire a public meeting for the purpose of being heard on the proposed withdrawal extension must submit a written request to the Montana State Director, Bureau of Land Management, within 90 days from the date of publication of this notice. If the authorized officer determines that a public meeting will be held, a notice of the time and place will be published in the **Federal Register** at least 30 days before the scheduled date of the meeting.

This withdrawal extension proposal will be processed in accordance with the applicable regulations set forth in 43 CFR 2310.4.

(Authority: 43 CFR 2310.3–1(b)(1))

Dated: November 26, 2007.

Gene R. Terland,

State Director, Montana State Office.

[FR Doc. E7–23463 Filed 12–3–07; 8:45 am]

BILLING CODE 3410–11–P

DEPARTMENT OF THE INTERIOR

National Park Service

Notice of Extension of Concession Contracts

AGENCY: National Park Service, Interior.

ACTION: Public notice.

DATES: *Effective Date:* October 1, 2007.

FOR FURTHER INFORMATION CONTACT: Jo A. Pendry, Concession Program Manager, National Park Service, Washington, DC 20240, Telephone 202/513–7156.

SUMMARY: Pursuant to 36 CFR 51.23, public notice is hereby given that the National Park Service proposes to extend the following expiring concession contracts for a period of up to 1 year, or until such time as a new contract is executed, whichever occurs sooner.

SUPPLEMENTARY INFORMATION: All of the listed concession authorizations will expire by their terms on or before September 30, 2007. The National Park Service has determined that the proposed short-term extensions are necessary in order to avoid interruption of visitor services and has taken all reasonable and appropriate steps to consider alternatives to avoid such interruption.

CONCESSION

Contract number	Concessioner name	Park
LARO003–92	Colville Tribal Enterprise Corporation	Lake Roosevelt National Recreation Area.
STLI003–89	ARAMARK Sports and Entertainment Services, Inc	Statue of Liberty National Monument.
ISRO002–02	Forever NPC Resorts, LLC	Isle Royale National Park.
GRSM001–07	Cades Cove Campground Store, Inc	Great Smoky Mountains National Park.

Dated: October 3, 2007.

Katherine H. Stevenson,

Acting Assistant Director, Business Services.

[FR Doc. 07–5923 Filed 12–3–07; 8:45 am]

BILLING CODE 4312–53–M

DEPARTMENT OF INTERIOR

National Park Service

Notice of Continuation of Visitor Services

AGENCY: National Park Service, Interior.

ACTION: Public notice.

DATES: *Effective Date:* October 1, 2007.

FOR FURTHER INFORMATION CONTACT: Jo A. Pendry, Concession Program Manager, National Park Service,

Washington, DC 20240, Telephone, 202/513–7156.

SUMMARY: Pursuant to the terms of existing concession contracts, public notice is hereby given that the National Park Service intends to request a continuation of visitor services for a period not-to-exceed 1 year from the date of contract expiration.

SUPPLEMENTARY INFORMATION: The contracts listed below have been extended to maximum allowable under 36 CFR 51.23. Under the provisions of current concession contracts and pending the completion of the public solicitation of a prospectus for a new concession contract, the National Park Service authorizes continuation of visitor services for a period not-to-exceed 1 year under the terms and conditions of the current contract as amended. The continuation of operations does not affect any rights with respect to selection for award of a new concession contract.

CONCESSION

Contract number	Concessioner name	Park
BIBE002–82	Forever NPC Resorts, LLC	Big Bend National Park.
LAME004–88	Lake Mead Ferry Service, Inc	Lake Mead National Recreation Area.
OLYM003–82	Forever NPC Resorts, LLC	Olympic National Park.
SLBE005–87	G. Michael Grosvenor	Sleeping Bear Dunes National Lakeshore.
STLI001–89	Circle Line-Statue of Liberty Ferry, Inc	Statue of Liberty National Monument.

Dated: October 3, 2007.

Katherine H. Stevenson,

Acting Assistant Director, Business Services.

[FR Doc. 07–5924 Filed 12–3–07; 8:45 am]

BILLING CODE 4312–53–M

DEPARTMENT OF THE INTERIOR

National Park Service

National Register of Historic Places; Notification of Pending Nominations and Related Actions

Nominations for the following properties being considered for listing or related actions in the National Register were received by the National Park Service before November 17, 2007. Pursuant to section 60.13 of 36 CFR part 60 written comments concerning the significance of these properties under the National Register criteria for evaluation may be forwarded by United States Postal Service, to the National Register of Historic Places, National Park Service, 1849 C St. NW., 2280, Washington, DC 20240; by all other carriers, National Register of Historic Places, National Park Service, 1201 Eye St., NW., 8th floor, Washington, DC 20005; or by fax, 202–371–6447. Written or faxed comments should be submitted by December 19, 2007.

J. Paul Loether,

Chief, National Register of Historic Places/National Historic Landmarks Program.

ARIZONA

Maricopa County

Railroad Steam Wrecking Crane and Tool Car, 330 E. Ryan Rd., Chandler, 07001301.

ARKANSAS

Sharp County

Camp Miramichee, 38 Riverview Cir., Hardy, 07001302.

CALIFORNIA

Los Angeles County

Old Pasadena Historic District, Fair Oaks & Raymond Aves., Colorado Blvd., Green St., Pasadena, 07001303.

Pisgah Home Historic District, 6026–6044 Echo St. & 6051 A–D Hayes St., Los Angeles, 07001304.

COLORADO

Otero County

Adobe Stables, Arkansas Valley Fairgrounds, (New Deal Resources on Colorado's Eastern Plains MPS) 800 N. 9th St., Rocky Ford, 07001305.

Phillips County

Phillips County Courthouse, (New Deal Resources on Colorado's Eastern Plains MPS). 221 Interocean Ave., Holyoke, 07001306.

GEORGIA

Bacon County

Bacon County School, 504 N. Pierce St., Alma, 07001307.

INDIANA

Monroe County

University Courts Historic District, Roughly bounded by 7th St., Indiana Ave., 10th St. & Woodlawn Ave., Bloomington, 07001308.

MARYLAND

Anne Arundel County

First Avenue School, 13 SW 1st Ave., Glen Burnie, 07001309.

Richland, 195 Harwood Rd., Harwood, 07001310.

Baltimore Independent City, Polish Home Hall, 4416 Fairhaven Ave., Baltimore (Independent City), 07001311.

MASSACHUSETTS

Franklin County

South School, 6 Schoolhouse Rd., Schutesbury, 07001312.

MINNESOTA

Hennepin County

Eitel Hospital, 1367 Willow St., Minneapolis, 07001313.

Pence Automobile Company Building, 800 Hennepin Ave., Minneapolis, 07001314.

Ramsey County

Riverside Hangar, 690 Bayfield St., Bldg. 690–01–01, St. Paul, 07001315.

St. Louis County

Listening Point, 3128 Listening Point Rd., Ely, 07001316.

Washington County

Log Cabin, 15021 60th St. N., Oak Park Heights, 07001317.

Stillwater Overlook, (Federal Relief Construction in Minnesota MPS), Lookout Trail near 63rd St. N., Oak Park Heights, 07001318.

MISSOURI

Dunklin County

Ely and Walker Shirt Factory No. 5, 221 S. Main St., Kennett, 07001319.

Jackson County

Walnut Street Warehouse and Commercial Historic District (Boundary Increase), 1612, 1616, 1620 & 1624 Grand Blvd. & 1705–07 & 1709 Walnut St., Kansas City, 07001320.

NEBRASKA

Buffalo County

Bartlett, John J. and Lenora, House, 1402 9th Ave., Kearney, 07001321.

Douglas County

Omaha Star, The, 2216 N. 24th St., Omaha, 07001322.

Platte County

Stenger, Albert and Lina, House, 815 Lovers Ln., Columbus, 07001323.

Scotts Bluff County

Saddle Club, 2000 W. Overland, Scottsbluff, 07001324.

Sherman County

Loup City Township Carnegie Library, (Carnegie Libraries in Nebraska MPS), 652 N St., Loup City, 07001326.

Wayne County

Wayne United States Post Office, 120 Pearl St., Wayne, 07001325.

PENNSYLVANIA

Allegheny County

Try Street Terminal, 600–620 2nd Ave., Pittsburgh, 07001327.

Philadelphia County

Budd, Edward G., Manufacturing Company, 2450 W. Hunting Park Rd., Philadelphia, 07001328.

WISCONSIN

Grant County

Boscobel Grand Army of the Republic Hall, 102 Mary St., Boscobel, 07001329.

Jackson County

Black River Falls Public Library, (Public Library Facilities of Wisconsin MPS), 321 Main St., Black River Falls, 07001330.

Milwaukee County

Spencerian Business College, 2800 W. Wright St., Milwaukee, 07001331.

A request for REMOVAL has been made for the following resource:

COLORADO

Denver County

Beierle Farm, (Denver International Airport MPS), Hudson Rd. just N. of Irondale Rd. Watkins, 92001673.

A request to MOVE has been made for the following resource:

OREGON

Multnomah County

U.S.S. LCI–713 (Landing craft), 1401 N. Hayden Island Dr., Portland, 070003000.

[FR Doc. E7–23423 Filed 12–3–07; 8:45 am]

BILLING CODE 4310–70–P

DEPARTMENT OF JUSTICE ANTITRUST DIVISION

United States v. *Vulcan Materials Co., et al.* Proposed Final Judgment and Competitive Impact Statement

Notice is hereby given pursuant to the Antitrust Procedures and Penalties Act, 15 U.S.C. 16(b)–(h), that a proposed Final Judgment and Competitive Impact Statement have been filed with the United States District Court for the District of Columbia in *United States* v. *Vulcan Materials Co., et al.,* Civil Action No. 1:07–cv–2044. On November 13, 2007, the United States filed a Complaint to obtain equitable and other relief against defendants Vulcan Materials Company (''Vulcan'') and Florida Rock Industries, Inc. (''Florida Rock'') to prevent Vulcan's proposed acquisition of Florida Rock. The Complaint alleges that Vulcan's acquisition of Florida Rock would substantially lessen competition in the production, distribution, and sale of coarse aggregate in and around Atlanta, Georgia; Columbus, Georgia; Chattanooga, Tennessee; and South Hampton Roads, Virginia, in violation of Section 7 of the Clayton Act, as amended, 15 U.S.C. 18. The proposed Final Judgment, filed on November 13, 2007, requires defendants to divest Florida Rock aggregate quarries in Northwest, West, and Southwest Atlanta, Georgia; Columbus, Georgia; Chattanooga, Tennessee; and Richmond, Virginia. In addition, defendants must divest a Florida Rock distribution yard located in Chesapeake, Virginia that receives coarse aggregate by barge from Florida Rock's Richmond quarry; a Vulcan aggregate quarry in South Atlanta, Georgia; and a Vulcan quarry under development in Southeast Atlanta, Georgia.

Copies of the Complaint, proposed Final Judgment, and Competitive Impact Statement are available for inspection at the Department of Justice, Antitrust Division, Antitrust Documents Group, 325 7th Street, NW., Room 215, Washington, DC 20530 (telephone: 202–514–2481), on the Department of Justice's Web site at *http://www.usdoj.gov/atr,* and at the Office of the Clerk of the United States District Court for the District of Columbia, Washington, DC. Copies of these materials may be obtained from the Antitrust Division upon request and payment of a copying fee set by Department of Justice regulations.

Public comment is invited within 60 days of the date of this notice. Such comments, and responses thereto, will be published in the **Federal Register** and filed with the Court. Comments should be directed to Maribeth Petrizzi, Chief, Litigation II Section, Antitrust Division, U.S. Department of Justice, 1401 H Street, NW., Suite 3000, Washington, DC 20530 (telephone: 202–307–0924).

Patricia A. Brink,

Deputy Director of Operations, Antitrust Division.

United States District Court for the District of Columbia

United States of America, Department of Justice, Antitrust Division, 1401 H Street, NW., Suite 3000, Washington, DC 20530, Plaintiff, v. *Vulcan Materials Company, 1200 Urban Center Drive, Birmingham, AL 35242,* and *Florida Rock Industries, Inc., 155 East 21st Street, Jacksonville, FL 32206,* Defendants.

Case: 1:07–cv–02044
Assigned To: Sullivan, Emmet G.
Assign. Date: 11/13/2007
Description: *Antitrust*
Deck Type: Antitrust
Date Stamp:

Complaint

Plaintiff United States of America (''United States''), acting under the direction of the Acting Attorney General of the United States, brings this civil antitrust action to obtain equitable and other relief against defendants Vulcan Materials Company (''Vulcan'') and Florida Rock Industries, Inc. (''Florida Rock'') to prevent Vulcan's proposed acquisition of Florida Rock. Plaintiff complains and alleges as follows:

I. Nature of the Action

1. On February 19, 2007, Vulcan and Florida Rock signed a definitive agreement for Vulcan to acquire Florida Rock in a cash-and-stock transaction valued at approximately $4.6 billion. The total blended cash-and-stock consideration for this transaction is approximately $68 per share.

2. Vulcan and Florida Rock both produce and distribute in the United States building materials, including, among other things, construction aggregates (which includes coarse aggregate) and ready mix concrete. Vulcan is the largest supplier of construction aggregates in the United States. Florida Rock is also a leading supplier of construction aggregates in the United States. Combined, Vulcan and Florida Rock will have construction aggregates reserves totaling approximately 13.9 billion tons.

3. The United States brings this action to prevent the proposed acquisition of Florida Rock by Vulcan because it would substantially lessen competition in the production, distribution, and sale of coarse aggregate in and around Atlanta, Georgia; Columbus, Georgia; Chattanooga, Tennessee; and South Hampton Roads, Virginia, in violation of Section 7 of the Clayton Act, 15 U.S.C. 18.

II. Parties to the Proposed Transaction

4. Defendant Vulcan is a New Jersey corporation with its principal place of business in Birmingham, Alabama. Vulcan produces, distributes, and sells, among other products, construction aggregates, ready mix concrete, hot mix asphalt, and asphalt coating to customers in 21 states, the District of Columbia, and Mexico.

5. Vulcan is the largest producer of construction aggregates in the United States. It has over 300 facilities for the

production and distribution of construction aggregates and other products. In 2006, Vulcan shipped approximately 255 million tons of construction aggregates, the majority of which was coarse aggregate. In 2006, Vulcan reported total sales of approximately $3 billion.

6. Defendant Florida Rock is a Florida corporation with its principal place of business in Jacksonville, Florida. Florida Rock produces, distributes, and sells in the Southeastern and mid-Atlantic states, among other products, construction aggregates, ready mix concrete, prestressed concrete, and cement.

7. Florida Rock is one of the largest United States suppliers of construction aggregates. In 2006, Florida Rock shipped approximately 45 million tons of construction aggregates, the majority of which was coarse aggregate. In 2006, Florida Rock reported total sales of approximately $1.4 billion.

III. Jurisdiction and Venue

8. Plaintiff United States brings this action under Section 15 of the Clayton Act, as amended, 15 U.S.C. 25, to prevent and restrain defendants from violating Section 7 of the Clayton Act, 15 U.S.C. 18.

9. Defendants produce, distribute, and sell coarse aggregate and other products in the flow of interstate commerce. Defendants' activities in producing, distributing, and selling these products substantially affect interstate commerce. This Court has subject matter jurisdiction over this action pursuant to Section 12 of the Clayton Act, 15 U.S.C. 22, and 28 U.S.C. 1331, 1337(a), and 1345.

10. Defendants have consented to venue and personal jurisdiction in this judicial district.

IV. Trade and Commerce

A. The Relevant Product Market

11. Construction aggregates consist primarily of crushed stone, gravel, and sand produced from natural deposits of various materials and removed from quarries, mines, or pits.

12. Coarse aggregate is a type of construction aggregate. Coarse aggregate is crushed stone produced at quarries or mines and used for, among other things, road base and the production of ready mix concrete and asphalt. Coarse aggregate typically is mixed with other materials to produce ready mix concrete and asphalt. Different sizes of coarse aggregate are needed to meet different project specifications.

13. There are no reliable substitutes for coarse aggregate because it differs from other products in its physical composition, functional characteristics, customary uses, consistent availability, and pricing. To the extent that any substitutes exist, customers already use these to the full extent possible in light of the limits on their availability and the amounts that can be used in a given product, and could not use more of them in place of coarse aggregate in response to an increase in the price of coarse aggregate.

14. A small but significant post-acquisition increase in the price of coarse aggregate would not cause the purchasers of coarse aggregate to substitute another product or otherwise reduce their usage of coarse aggregate in sufficient quantities so as to make such a price increase unprofitable.

15. Accordingly, the production, distribution, and sale of coarse aggregate is a line of commerce and a relevant product market within the meaning of Section 7 of the Clayton Act.

B. The Relevant Geographic Markets

16. Coarse aggregate is a bulky, heavy, and relatively low-value product. The cost of transporting coarse aggregate is high compared to the value of the product.

17. Transportation costs limit the distance coarse aggregate can be economically transported from a quarry or mine to a job site or a ready mix concrete or asphalt plant. The geographic area within which a coarse aggregate supplier can compete most vigorously thus is limited by the cost of hauling the coarse aggregate. As a result, the competitiveness of a coarse aggregate supplier in a given area is limited by its distance from customer plants or project sites relative to other suppliers.

18. Florida Rock owns and operates a coarse aggregate quarry located in Cedarton, Georgia, known as the Six Mile quarry. This quarry serves a geographic area that includes, among other areas, all or part of Floyd, Polk, Haralson, and Bartow Counties in Georgia (hereafter referred to as ''Northwest Atlanta''). Customers with plants or jobs within Northwest Atlanta may, depending on the location of their plant or job sites, also economically procure coarse aggregate from Vulcan's Adairsville, Bartow, and Rockmart quarries and from another competitor's quarry located in Cartersville, Georgia. Other quarries cannot on a regular basis compete successfully for customers with plants or jobs in Northwest Atlanta because they are too far away and the hauling costs are too great.

19. A small but significant post-acquisition increase in the price of coarse aggregate to customers with plants or jobs in Northwest Atlanta would not cause those customers to procure coarse aggregate from quarries farther away than those identified in paragraph 18 in sufficient quantities so as to make such a price increase unprofitable.

20. Florida Rock owns and operates a coarse aggregate quarry located in Yorkville, Georgia, known as the Paulding quarry. This quarry serves a geographic area that includes, among other areas, all or part of Paulding, Douglas, Carroll, Haralson, Polk, and Cobb Counties in Georgia (hereafter referred to as ''West Atlanta''). Customers with plants or jobs within West Atlanta may, depending on the location of their plant or job sites, also economically procure coarse aggregate from Vulcan's Villa Rica, Kennesaw, and Lithia Springs quarries and from the quarries of other competitors located in Dallas, Georgia, and Douglasville, Georgia. Other quarries cannot on a regular basis compete successfully for customers with plants or jobs in West Atlanta because they are too far away and the hauling costs are too great.

21. A small but significant post-acquisition increase in the price of coarse aggregate to customers with plants or jobs in West Atlanta would not cause those customers to procure coarse aggregate from quarries farther away than those identified in paragraph 20 in sufficient quantities so as to make such a price increase unprofitable.

22. Florida Rock owns and operates a coarse aggregate quarry located in Tyrone, Georgia, known as the Tyrone quarry. This quarry serves a geographic area that includes, among other areas, all or part of Fulton, Coweta, Fayette, and Clayton Counties in Georgia (hereafter referred to as ''Southwest Atlanta''). Customers with plants or jobs within Southwest Atlanta may, depending on the location of their plant or job sites, also economically procure coarse aggregate from Vulcan's Madras quarry and from another competitor's quarry located in Tyrone, Georgia. Other quarries cannot on a regular basis compete successfully for customers with plants or jobs in Southwest Atlanta because they are too far away and the hauling costs are too great.

23. A small but significant post-acquisition increase in the price of coarse aggregate to customers with plants or jobs in Southwest Atlanta would not cause those customers to procure coarse aggregate from quarries farther away than those identified in paragraph 22 in sufficient quantities so as to make such a price increase unprofitable.

24. Florida Rock owns and operates a coarse aggregate quarry located in Riverdale, Georgia, known as the Forest Park quarry. This quarry serves a geographic area that includes, among other areas, all or part of Fulton, Clayton, Henry, DeKalb, and Fayette Counties in Georgia (hereafter referred to as ''South Atlanta''). Customers with plants or jobs within South Atlanta may, depending on the location of their plant or job sites, also economically procure coarse aggregate from Vulcan's Red Oak quarry and from another competitor's quarry located in College Park, Georgia. Other quarries cannot on a regular basis compete successfully for customers with plants or jobs in South Atlanta because they are too far away and the hauling costs are too great.

25. A small but significant post-acquisition increase in the price of coarse aggregate to customers with plants or jobs in South Atlanta would not cause those customers to procure coarse aggregate from quarries farther away than those identified in paragraph 24 in sufficient quantities so as to make such a price increase unprofitable.

26. Florida Rock owns and operates a coarse aggregate quarry located in Zotella, Georgia, known as the Griffin quarry. This quarry serves a geographic area that includes, among other areas, all or part of Spalding and Henry Counties in Georgia (hereafter referred to as ''Southeast Atlanta''). Customers with plants or jobs within Southeast Atlanta may, depending on the location of their plant or job sites, also economically procure coarse aggregate from Vulcan's Stockbridge quarry. In addition, Vulcan is in the process of opening a new quarry in Butts County, Georgia, expected to be operational in 2008, from which it plans to serve, among other areas, customers in all or part of Southeast Atlanta. Other quarries cannot on a regular basis compete successfully for customers with plants or jobs in Southeast Atlanta because they are too far away and the hauling costs are too great.

27. A small but significant post-acquisition increase in the price of coarse aggregate to customers with plants or jobs in Southeast Atlanta would not cause those customers to procure coarse aggregate from quarries farther away than those identified in paragraph 26 in sufficient quantities so as to make such a price increase unprofitable.

28. Florida Rock owns a majority interest in a company that owns and operates a coarse aggregate quarry located in Columbus, Georgia, known as the Columbus quarry. This quarry serves a geographic area that includes, among other areas, all or part of Muscogee and Harris Counties in Georgia (hereafter referred to as ''Columbus''). Customers with plants or jobs within Columbus may, depending on the location of their plant or job sites, also economically procure coarse aggregate from Vulcan's Barin quarry and from another competitor's quarry located in Midland, Georgia. Other quarries cannot on a regular basis compete successfully for customers with plants or jobs in Columbus because they are too far away and the hauling costs are too great.

29. A small but significant post-acquisition increase in the price of coarse aggregate to customers with plants or jobs in Columbus would not cause those customers to procure coarse aggregate from quarries farther away than those identified in paragraph 28 in sufficient quantities so as to make such a price increase unprofitable.

30. Florida Rock owns and operates a coarse aggregate quarry located in Chattanooga, Tennessee, known as the Jersey Pike quarry. This quarry serves a geographic area that includes, among other areas, all or part of Hamilton County in Tennessee (hereafter referred to as ''Chattanooga''). Customers with plants or jobs within Chattanooga may, depending on the location of their plant or job sites, also economically procure coarse aggregate from Vulcan's Chattanooga quarry and from another competitor's quarries located in Chattanooga and Ringgold, Georgia. Other quarries cannot on a regular basis compete successfully for customers with plants or jobs in Chattanooga because they are too far away and the hauling costs are too great.

31. A small but significant post-acquisition increase in the price of coarse aggregate to customers with plants or jobs in Chattanooga would not cause those customers to procure coarse aggregate from quarries farther away than those identified in paragraph 30 in sufficient quantities so as to make such a price increase unprofitable.

32. Florida Rock owns and operates a coarse aggregate quarry located in Richmond, Virginia, known as the Richmond quarry, a coarse aggregate quarry located in Havre de Grace, Maryland, known as the Havre de Grace quarry, and a barge-served distribution yard located in Chesapeake, Virginia, known as the Gilmerton yard. Florida Rock also operates a distribution yard owned by a third party located in Chesapeake, Virginia. Via these distribution yards, Florida Rock serves a geographic area that includes, among other areas, all or part of the cities of Norfolk, Suffolk, Portsmouth, Chesapeake, and Virginia Beach in Virginia (hereafter referred to as ''South Hampton Roads''). Customers with plants or jobs within South Hampton Roads may, depending on the location of their plant or job sites, also economically procure coarse aggregate from Vulcan rail and barge terminals supplied by Vulcan's Richmond, Lawrenceville, and Skippers quarries. Other quarries cannot on a regular basis compete successfully for customers with plants or jobs in South Hampton Roads because they do not have appropriate distribution facilities in the area and/or quarries similarly proximate to rail lines or navigable water sources.

33. A small but significant post-acquisition increase in the price of coarse aggregate to customers with plants or jobs in South Hampton Roads would not cause those customers to procure coarse aggregate from quarries farther away than those identified in paragraph 32 in sufficient quantities so as to make such a price increase unprofitable.

34. Accordingly, the relevant geographic markets, within the meaning of Section of the Clayton Act, are locations of coarse aggregate customers in: Northwest Atlanta, West Atlanta, Southwest Atlanta, South Atlanta, Southeast Atlanta, Columbus, Chattanooga, and South Hampton Roads.

C. Anticompetitive Effects

1. The Proposed Transaction Will Harm Competition in the Markets for Coarse Aggregate in the Relevant Geographic Markets

35. Price competition between Vulcan and Florida Rock in the production, distribution, and sale of coarse aggregate has benefited customers.

36. In Southeast Atlanta and South Hampton Roads, the proposed acquisition will eliminate the competition between Vulcan and Florida Rock and reduce the number of suppliers of many specifications of coarse aggregate from two to one. In Southeast Atlanta, the acquisition will also eliminate the competition between Florida Rock and Vulcan that would result from the opening of Vulcan's new quarry in Butts County.

37. In Northwest Atlanta, Southwest Atlanta, South Atlanta, Columbus, and Chattanooga, the proposed acquisition will eliminate the competition between Vulcan and Florida Rock and reduce the number of coarse aggregate suppliers from three to two generally, and for some customers and projects from two to one.

38. In West Atlanta, the proposed acquisition will eliminate the

competition between Vulcan and Florida Rock and reduce the number of coarse aggregate suppliers from four to three generally, and for some customers and projects from three to two.

39. The proposed acquisition will substantially increase the likelihood that Vulcan will unilaterally increase the price of coarse aggregate to a significant number of customers in Northwest Atlanta, West Atlanta, Southwest Atlanta, South Atlanta, Southeast Atlanta, Columbus, Chattanooga, and South Hampton Roads.

40. The response of other coarse aggregate suppliers in the relevant geographic markets would not be sufficient to constrain a unilateral exercise of market power by Vulcan after the acquisition because those suppliers likely would not have sufficient capacity and/or incentives to increase production and sales enough to defeat an anticompetitive price increase by Vulcan. State permits and county zoning restrictions in many cases limit quarries' hours of operation and/or production levels, and many coarse aggregate suppliers face practical limitations on the amount of truck traffic their facilities can handle. Moreover, because coarse aggregate mined from quarries is a depletable natural resource and every quarry has finite reserves, every sale by a supplier today represents a tradeoff against future sales.

41. In addition, and notwithstanding competitor responses, post-merger Vulcan will be able to increase prices to those customers that have plants or job sites for which both a Vulcan quarry and a Florida Rock quarry are closer than any other quarries producing coarse aggregate meeting their specifications. Coarse aggregate suppliers know the locations of their competitors' quarries and the distance from their own quarries and their competitors' quarries to a customer's plant or job site. Generally, because of transportation costs, the farther a supplier's closest competitor is from a job site, the less price competition that supplier faces for that project. Post-acquisition, in instances where Vulcan and Florida Rock quarries would be the closest quarries to a customer's plant or project and the next closest coarse aggregate supplier's plant is farther from the customer's plant or project, the combined firm, using the knowledge of its competitors' quarry locations, would be able to charge such customers higher prices.

42. Without the constraint of competition between Vulcan and Florida Rock, the combined firm will have a greater ability to exercise market power by raising prices to customers for whom Vulcan or Florida Rock were sources of coarse aggregate.

43. In addition, Vulcan's elimination of Florida Rock as an independent competitor in the production, distribution, and sale of coarse aggregate is likely to facilitate anticompetitive coordination among the remaining coarse aggregate suppliers in Northwest Atlanta, West Atlanta, Southwest Atlanta, South Atlanta, Columbus, and Chattanooga. Coarse aggregate is homogeneous and suppliers have access to information about competitors' output, capacity, and costs. Given these market conditions, eliminating one of the few coarse aggregate competitors is likely to further increase the ability of the remaining competitors to coordinate successfully.

44. The transaction therefore will substantially lessen competition in the production, distribution, and sale of coarse aggregate in the relevant geographic markets. This is likely to lead to higher prices for the ultimate consumers of coarse aggregate, in violation of Section 7 of the Clayton Act.

2. Entry Is Not Likely To Deter the Exercise of Market Power

45. Timely and successful entry into the production, distribution, and sale of coarse aggregate is unlikely in the relevant geographic areas.

46. Securing the proper site for a coarse aggregate quarry or mine is difficult, time-consuming, and costly. It requires the investigation and extensive testing of candidate sites, as well as negotiating necessary land transfers, leases, and/or easements. The location of a quarry, mine, or yard is important due to the high cost of transporting coarse aggregate, but there are few sites, especially in metropolitan areas, on which to locate coarse aggregate operations.

47. Due to the geology in South Hampton Roads, coarse aggregate for most applications in South Hampton Roads is produced outside the area. For an entrant to compete effectively in South Hampton Roads with a combined Vulcan and Florida Rock, that entrant must pair a new or existing rail- or water-served quarry with a distribution yard in the South Hampton Roads area that is capable of receiving coarse aggregate from such a quarry. Rail- or water-served quarries situated to compete effectively in South Hampton Roads, and the proper sites for distribution yards to serve those quarries, are scarce.

48. Obtaining necessary zoning variances and governmental permits for a coarse aggregate quarry or mine also can be difficult, time-consuming, and costly. In metropolitan areas, land of the necessary size and geology often is already utilized or does not have the appropriate zoning, and obtaining zoning variances can be extremely difficult. Attempts to open a new coarse aggregate quarry or mine, especially in metropolitan areas (such as West Atlanta, Southwest Atlanta, South Atlanta, Columbus, Chattanooga, and South Hampton Roads) but also frequently in rural areas, often face fierce public opposition. This public opposition can prevent a coarse aggregate quarry or mine from opening or make opening it much more time-consuming and costly. In addition, state and federal water, air quality, and other permitting process requirements must be met.

49. Even after a quarry or mine site is acquired and properly zoned and permitted, the owner must spend significant time and resources to prepare the land and install the equipment necessary to run the operation.

50. Therefore, entry by any other firm into the coarse aggregate market in the relevant geographic areas will not be timely, likely, or sufficient to defeat an anticompetitive price increase.

V. Violations Alleged

51. The proposed acquisition of Florida Rock by Vulcan would substantially lessen competition and tend to create a monopoly in interstate trade and commerce in violation of Section 7 of the Clayton Act, 15 U.S.C. 18.

52. Unless restrained, the transaction will have the following anticompetitive effects, among others:

a. Actual and potential competition between Vulcan and Florida Rock in the production, distribution, and sale of coarse aggregate in the relevant geographic markets will be eliminated;

b. Competition generally in the production, distribution, and sale of coarse aggregate in the relevant geographic markets will be substantially lessened; and

c. Prices for coarse aggregate in the relevant geographic markets likely will increase.

VI. Request for Relief

53. Plaintiff requests that:

a. Vulcan's proposed acquisition of Florida Rock be adjudged and decreed to be unlawful and in violation of Section 7 of the Clayton Act, 15 U.S.C. 18;

b. Defendants and all persons acting on their behalf be permanently enjoined and restrained from consummating the proposed acquisition or from entering into or carrying out any contract, agreement, plan, or understanding, the effect of which would be to combine Vulcan with the operations of Florida Rock;

c. Plaintiff be awarded its costs for this action; and

d. Plaintiff receive such other and further relief as the Court deems just and proper.

Respectfully submitted,

For Plaintiff United States of America:

Thomas O. Barnett,

Assistant Attorney General D.C. Bar #426840

David L. Meyer,

Deputy Assistant Attorney General D.C. Bar #414420

Patricia A. Brink,

Deputy Director of Operations

Maribeth Petrizzi,

Chief, Litigation II Section D.C. Bar #435204

Dorothy B. Fountain,

Assistant Chief, Litigation II Section D.C. Bar #439469

Robert W. Wilder,
Helena Gardner,
Christine A. Hill (D.C. Bar #461048),
Leslie Peritz,
Lowell Stern (D.C. Bar #440487),
James S. Yoon (D.C. Bar #491309),

Attorneys, United States Department of Justice Antitrust Division, Litigation II Section, 1401 H Street, NW., Suite 3000, Washington, DC 20530, (202) 307–6336

Dated: November 13, 2007

United States District Court for the District of Columbia

United States of America, Plaintiff, v. *Vulcan Materials Company and Florida Rock Industries, Inc.,* Defendants.

Case No.:
Judge:
Deck Type: Antitrust
Date Stamp:

Final Judgment

Whereas, plaintiff, United States of America, filed its Complaint on November 13, 2007, and plaintiff and defendants, Vulcan Materials Company (''Vulcan'') and Florida Rock Industries, Inc. (''Florida Rock''), by their respective attorneys, have consented to the entry of this Final Judgment without trial or adjudication of any issue of fact or law, and without this Final Judgment constituting any evidence against or admission by any party regarding any issue of fact or law;

And whereas, defendants agree to be bound by the provisions of this Final Judgment pending its approval by the Court;

And whereas, the essence of this Final Judgment is the prompt and certain divestiture of certain rights or assets by defendants to assure that competition is not substantially lessened;

And whereas, the United States requires defendants to make certain divestitures for the purpose of remedying the loss of competition alleged in the Complaint;

And whereas, defendants have represented to the United States that the divestitures required below can and will be made and that defendants will later raise no claim of hardship or difficulty as grounds for asking the Court to modify any of the divestiture provisions contained below;

Now therefore, before any testimony is taken, without trial or adjudication of any issue of fact or law, and upon consent of the parties, it is *ordered, adjudged and decreed:*

I. Jurisdiction

This Court has jurisdiction over the subject matter of and each of the parties to this action. The Complaint states a claim upon which relief may be granted against defendants under Section 7 of the Clayton Act, as amended, 15 U.S.C. 18.

II. Definitions

As used in this Final Judgment:

A. ''Acquirer'' or ''Acquirers'' means the entity or entities to whom defendants divest some or all of the Divestiture Assets.

B. ''Coarse aggregate'' means crushed stone produced at quarries or mines and used for, among other things, road base and the production of ready mix concrete and asphalt.

C. ''Divestiture Assets'' means:

1. The following quarries and yard:

a. The Florida Rock Six Mile quarry, located at 3785 Cave Springs Road, Cedarton, Georgia;

b. The Florida Rock Paulding quarry, located at 112 Quarry Road, Yorkville, Georgia;

c. The Florida Rock Tyrone quarry, located at 240 Rockwood Road, Tyrone, Georgia;

d. The Vulcan Red Oak quarry, located at 5414 Buffington Road, Red Oak, Georgia;

e. The Vulcan quarry under development in Butts County, located on Greer Dairy Road, Jackson, Georgia;

f. The Florida Rock interest in Columbus Quarry LLC, which owns the Columbus quarry, located at 3001 Smith Road, Columbus, Georgia;

g. The Florida Rock Jersey Pike quarry, located at 2 Pelican Drive, Chattanooga, Tennessee;

h. The Florida Rock Richmond quarry, located at 2100 Deepwater Terminal Road, Richmond, Virginia (but excluding the Florida Rock ready mix concrete plant, the real property necessary for the operation of the plant (provided the conveyance of such property does not interfere with the operation of the Richmond quarry), and all other tangible and intangible assets exclusively used in the plant's operations) and, at the option of the Acquirer, use of the real property, parking lot, equipment shop, and office building equivalent to that which Florida Rock currently has for its quarry operations; and

i. The Florida Rock Gilmerton yard, located at 4606 Bainbridge Boulevard, Chesapeake, Virginia (but excluding the Florida Rock ready mix concrete plant, the real property necessary for the operation of the plant (provided the conveyance of such property does not interfere with the operation of the Gilmerton yard), and all other tangible and intangible assets exclusively used in the plant's operations) and, at the option of the Acquirer, use of the real property, parking lot, equipment shop, fuel station, and office building equivalent to that which Florida Rock currently has for its operation of the yard;

2. All tangible assets used in or for the quarries and yard listed in Paragraphs II(C)(1)(a) through (i), including but not limited to all research and development activities (except for any such research and development activities that are principally devoted to either defendant's operations as a whole and not specifically to the operations of the quarries and yard listed in Paragraphs II(C)(1)(a) through (i), and that are not necessary to the operation of the quarries and yard listed in Paragraphs II(C)(1)(a) through (i)), equipment, tooling and fixed assets, real property (leased or owned), personal property, inventory, coarse aggregate reserves, office furniture, materials, supplies, on- or off-site warehouses or storage facilities relating to the quarries and yard; all licenses, permits, and authorizations issued by any governmental organization relating to the quarries and yard; all contracts, teaming arrangements, agreements, leases (including renewal rights), commitments, certifications, and understandings relating to the quarries and yard, including sales agreements and supply agreements; all customer lists, contracts, accounts, and credit records relating to the quarries and yard; all repair and performance records and all other records relating to the quarries and yard; at the option of the Acquirer or Acquirers, a number of trucks, rail cars, and other vehicles usable at the

quarries and yard listed in Paragraphs II(C)(1)(a) through (i) equal to, for each separate type of truck, rail car, or other vehicle, the average number of trucks, rail cars, and other vehicles of that type, owned or controlled by defendants, used at each such quarry or yard per month during the months of operation of the quarry or yard between January 1, 2006 and December 31, 2006 (calculated by averaging the number of trucks, rail cars, and other vehicles of each type, owned or controlled by defendants, that were used at each quarry or yard at any time during each month that the quarry or yard was in operation); and at the option of the Acquirer or Acquirers, a number of barges usable at the quarry and yard listed in Paragraphs II(C)(1)(h) and (i) equal to, for each separate type of barge, the average number of barges of that type, owned or controlled by defendants, used at such quarry or yard per month during the months of operation of the quarry or yard between January 1, 2006 and December 31, 2006 (calculated by averaging the number of barges of that type, owned or controlled by defendants, that were used at such quarry or yard at any time during each month that the quarry or yard was in operation); and

3. All intangible assets used in the development, production, servicing, distribution, and sale of products produced by or in the quarries or stored in the yard listed in Paragraphs II(C)(1)(a) through (i), including but not limited to all contractual rights (except for any such contractual rights that are principally devoted to either defendant's operations as a whole and not specifically to the operations of the quarries and yard listed in Paragraphs II(C)(1)(a) through (i), and that are not necessary to the operation of the quarries and yard listed in Paragraphs II(C)(1)(a) through (i)), patents, licenses and sub-licenses, intellectual property rights, copyrights, trademarks, trade names, service marks, service names, technical information, know-how, trade secrets, drawings, blueprints, designs, design protocols, specifications for materials, specifications for parts and devices, safety procedures for the handling of materials and substances, quality assurance and control procedures, all manuals and technical information defendants provide to their own employees, customers, suppliers, agents, or licensees, and all research data (including coarse aggregate reserve testing information) concerning historic and current research and development efforts relating to the quarries and yard, including but not limited to designs of experiments and the results of successful and unsuccessful designs and experiments. Notwithstanding anything to the contrary in this Final Judgment, if requested by an Acquirer, and subject to approval by the United States in its sole discretion, defendants shall offer to enter into a transition services agreement with respect to computer software (including dispatch software and management information systems) and related documentation, and design tools and simulation capability.

D. ''Florida Rock'' means defendant Florida Rock Industries, Inc., a Florida corporation with its headquarters in Jacksonville, Florida, its successors and assigns, and its subsidiaries, divisions, groups, affiliates, partnerships and joint ventures, and their directors, officers, managers, agents, and employees.

E. ''Vulcan'' means defendant Vulcan Materials Company, a New Jersey corporation with its headquarters in Birmingham, Alabama, its successors and assigns, and its subsidiaries, divisions, groups, affiliates, partnerships and joint ventures, and their directors, officers, managers, agents, and employees.

III. Applicability

A. This Final Judgment applies to Vulcan and Florida Rock, as defined above, and all other persons in active concert or participation with Vulcan or Florida Rock who receive actual notice of this Final Judgment by personal service or otherwise.

B. If, prior to complying with Sections IV and V of this Final Judgment, defendants sell or otherwise dispose of all or substantially all of their assets or of lesser business units that include the Divestiture Assets, they shall require the purchaser to be bound by the provisions of this Final Judgment. Defendants need not obtain such an agreement from the acquirers of the assets divested pursuant to this Final Judgment.

IV. Divestitures

A. Defendants are ordered and directed, within ninety (90) calendar days after the filing of the Complaint in this matter, or five (5) days after notice of the entry of this Final Judgment by the Court, whichever is later, to divest the Divestiture Assets in a manner consistent with this Final Judgment to an Acquirer or Acquirers acceptable to the United States in its sole discretion. The United States, in its sole discretion, may agree to one or more extensions of this time period, not to exceed in total sixty (60) calendar days, and shall notify the Court in each such circumstance. Defendants agree to use their best efforts to divest the Divestiture Assets as expeditiously as possible.

B. In accomplishing the divestitures ordered by this Final Judgment, defendants promptly shall make known, by usual and customary means, the availability of the Divestiture Assets. Defendants shall inform any person making inquiry regarding a possible purchase of the Divestiture Assets that they are being divested pursuant to this Final Judgment and provide that person with a copy of this Final Judgment. Unless the United States otherwise consents in writing, defendants shall offer to furnish to all prospective Acquirers, subject to customary confidentiality assurances, all information and documents relating to the Divestiture Assets customarily provided in a due diligence process except such information or documents subject to the attorney-client or work-product privileges. Defendants shall make available such information to the United States at the same time that such information is made available to any other person.

C. Defendants shall not take any action that win impede in any way any person from competing for or obtaining the lease to the Branscome Chesapeake yard, located at 120 Dominion Boulevard, Chesapeake, Virginia.

D. Unless the United States otherwise consents in writing, defendants shall provide the Acquirer or Acquirers and the United States information relating to personnel involved in production, operations, development, and sales at the Divestiture Assets to enable the Acquirer or Acquirers to make offers of employment. Defendants shall not interfere with any negotiations by the Acquirer or Acquirers to employ any employee of the Divestiture Assets whose primary responsibility is production, operations, development, or sales at the Divestiture Assets.

E. Unless the United States otherwise consents in writing, defendants shall permit prospective Acquirers of the Divestiture Assets to have reasonable access to personnel and to make inspections of the physical facilities of the Divestiture Assets; access to any and all environmental, zoning, and other permit documents and information; and access to any and all financial, operational, or other documents and information customarily provided as part of a due diligence process.

F. With the exception of the Butts County site listed in Paragraph II(C)(1)(e), defendants shall warrant to the Acquirer or Acquirers that each asset will be operational on the date of sale. Vulcan shall further warrant to the Acquirer that it has obtained all environmental, zoning, or other permits required to produce coarse aggregate at

the Vulcan quarry under development in Butts County, identified in Paragraph II(C)(1)(e), and that such permits are transferable to the Acquirer.

G. Defendants shall not take any action that will impede in any way the permitting, operation, or divestiture of the Divestiture Assets.

H. Defendants shall warrant to the Acquirer or Acquirers that there are no material defects in the environmental, zoning, or other permits pertaining to the operation of the Divestiture Assets. Defendants shall not undertake, directly or indirectly, any challenges to the environmental, zoning, or other permits relating to the operation of the Divestiture Assets.

I. Unless the United States otherwise consents in writing, any divestiture pursuant to Section IV, or by trustee appointed pursuant to Section V, of this Final Judgment, shall include the entire Divestiture Assets, and shall be accomplished in such a way as to satisfy the United States, in its sole discretion, that the Divestiture Assets can and will be used by the Acquirer or Acquirers as viable, ongoing businesses engaged in producing and distributing coarse aggregate, that the Divestiture Assets will remain viable, and that the divestiture of such assets will remedy the competitive harm alleged in the Complaint. The sale of the Divestiture Assets may be made to one or more Acquirers, so long as the Florida Rock Richmond quarry, identified in Paragraph II(C)(1)(h) above, and the Florida Rock Gilmerton yard, identified in Paragraph II(C)(1)(i) above, are divested to a single Acquirer. The divestitures, whether pursuant to Section IV or Section V of this Final Judgment:

1. Shall be made to an Acquirer or Acquirers that, in the United States's sole judgment, has the intent and capability (including the necessary managerial, operational, technical and financial capability) to compete effectively in the production, distribution, and sale of coarse aggregate; and

2. Shall be accomplished so as to satisfy the United States, in its sole discretion, that none of the terms of any agreement between an Acquirer or Acquirers and defendants gives defendants the ability to unreasonably raise the Acquirer's costs, to lower the Acquirer's efficiency, or otherwise to interfere in the ability of the Acquirer to compete effectively in the production, distribution, and sale of coarse aggregate.

V. Appointment of Trustee To Effect Divestitures

A. If defendants have not divested the Divestiture Assets within the time period specified in Paragraph IV(A), defendants shall notify the United States of that fact in writing. Upon application of the United States, the Court shall appoint a trustee selected by the United States and approved by the Court to effect the divestiture of the Divestiture Assets.

B. After the appointment of a trustee becomes effective, only the trustee shall have the right to sell the Divestiture Assets. The trustee shall have the power and authority to accomplish the divestiture to an Acquirer acceptable to the United States at such price and on such terms as are then obtainable upon reasonable effort by the trustee, subject to the provisions of Sections IV, V, and VI of this Final Judgment, and shall have such other powers as this Court deems appropriate. Subject to Paragraph V(D) of this Final Judgment, the trustee may hire at the cost and expense of defendants any investment bankers, attorneys, or other agents, who shall be solely accountable to the trustee, reasonably necessary in the trustee's judgment to assist in the divestiture.

C. Defendants shall not object to a sale by the trustee on any ground other than the trustee's malfeasance. Any such objection by defendants must be conveyed in writing to the United States and the trustee within ten (10) calendar days after the trustee has provided the notice required under Section VI.

D. The trustee shall serve at the cost and expense of defendants, on such terms and conditions as the United States approves, and shall account for all monies derived from the sale of the assets sold by the trustee and all costs and expenses so incurred. After approval by the Court of the trustee's accounting, including fees for its services and those of any professionals and agents retained by the trustee, all remaining money shall be paid to defendants and the trust shall then be terminated. The compensation of the trustee and any professionals and agents retained by the trustee shall be reasonable in light of the value of the Divestiture Assets and based on a fee arrangement providing the trustee with an incentive based on the price and terms of the divestiture and the speed with which it is accomplished, but timeliness is paramount.

E. Defendants shall use their best efforts to assist the trustee in accomplishing the required divestiture. The trustee and any consultants, accountants, attorneys, and other persons retained by the trustee shall have full and complete access to the personnel, books, records, and facilities of the business to be divested, and defendants shall develop financial and other information relevant to such business as the trustee may reasonably request, subject to reasonable protection for trade secrets or other confidential research, development, or commercial information. Defendants shall take no action to interfere with or to impede the trustee's accomplishment of the divestiture.

F. After its appointment, the trustee shall file monthly reports with the United States and the Court setting forth the trustee's efforts to accomplish the divestiture ordered under this Final Judgment. To the extent such reports contain information that the trustee deems confidential, such reports shall not be filed in the public docket of the Court. Such reports shall include the name, address, and telephone number of each person who, during the preceding month, made an offer to acquire, expressed an interest in acquiring, entered into negotiations to acquire, or was contacted or made an inquiry about acquiring any interest in the Divestiture Assets, and shall describe in detail each contact with any such person. The trustee shall maintain full records of all efforts made to divest the Divestiture Assets.

G. If the trustee has not accomplished the divestitures ordered under this Final Judgment within six months after its appointment, the trustee shall promptly file with the Court a report setting forth: (1) The trustee's efforts to accomplish the required divestiture; (2) the reasons, in the trustee's judgment, why the required divestiture has not been accomplished; and (3) the trustee's recommendations. To the extent such report contains information that the trustee deems confidential, such report shall not be filed in the public docket of the Court. The trustee shall at the same time furnish such report to the United States, which shall have the right to make additional recommendations consistent with the purpose of the trust. The Court thereafter shall enter such orders as it shall deem appropriate to carry out the purpose of the Final Judgment, which may, if necessary, include extending the trust and the term of the trustee's appointment by a period requested by the United States.

VI. Notice of Proposed Divestitures

A. Within two (2) business days following execution of a definitive divestiture agreement, defendants or the trustee, whichever is then responsible for effecting the divestiture required herein, shall notify the United States of any proposed divestiture required by Section IV or V of this Final Judgment. If the trustee is responsible, it shall similarly notify defendants. The notice shall set forth the details of the

proposed divestiture and list the name, address, and telephone number of each person not previously identified who offered or expressed an interest in or desire to acquire any ownership interest in the Divestiture Assets, together with full details of the same.

B. Within fifteen (15) calendar days of receipt by the United States of such notice, the United States may request from defendant, the proposed Acquirer or Acquirers, any other third party, or the trustee, if applicable, additional information concerning the proposed divestiture, the proposed Acquirer or Acquirers, and any other potential Acquirer. Defendants and the trustee shall furnish any additional information requested within fifteen (15) calendar days of the receipt of the request, unless the parties shall otherwise agree.

C. Within thirty (30) calendar days after receipt of the notice, or within twenty (20) calendar days after the United States has been provided the additional information requested from defendant, the proposed Acquirer or Acquirers, any third party, or the trustee, whichever is later, the United States shall provide written notice to defendants and the trustee, if there is one, stating whether or not it objects to the proposed divestiture. If the United States provides written notice that it does not object, the divestiture may be consummated, subject only to defendant's limited right to object to the sale under Paragraph V(C) of this Final Judgment. Absent written notice that the United States does not object to the proposed Acquirer or upon objection by the United States, a divestiture proposed under Section IV or Section V shall not be consummated. Upon objection by defendants under Paragraph V(C), a divestiture proposed under Section V shall not be consummated unless approved by the Court.

VII. Financing

Defendants shall not finance all or any part of any purchase made pursuant to Section IV or V of this Final Judgment.

VIII. Hold Separate

Until the divestitures required by this Final Judgment have been accomplished, defendants shall take all steps necessary to comply with the Hold Separate Stipulation and Order entered by this Court. Defendants shall take no action that would jeopardize the divestiture ordered by this Court.

IX. Affidavits

A. Within twenty (20) calendar days of the filing of the Complaint in this matter, and every thirty (30) calendar days thereafter until the divestitures have been completed under Section IV or V, defendants shall deliver to the United States an affidavit as to the fact and manner of their compliance with Section IV or V of this Final Judgment. Each such affidavit shall include the name, address, and telephone number of each person who, during the preceding thirty (30) calendar days, made an offer to acquire, expressed an interest in acquiring, entered into negotiations to acquire, or was contacted or made an inquiry about acquiring, any interest in the Divestiture Assets, and shall describe in detail each contact with any such person during that period. Each such affidavit shall also include a description of the efforts defendants have taken to solicit buyers for the Divestiture Assets, and to provide required information to any prospective Acquirer, including the limitations, if any, on such information. Assuming the information set forth in the affidavit is true and complete, any objection by the United States to information provided by defendants, including limitations on the information, shall be made within fourteen (14) calendar days of receipt of such affidavit.

B. Within twenty (20) calendar days of the filing of the Complaint in this matter, defendants shall deliver to the United States an affidavit that describes in reasonable detail all actions defendants have taken and all steps defendants have implemented on an ongoing basis to comply with Section VIII of this Final Judgment. Defendants shall deliver to the United States an affidavit describing any changes to the efforts and actions outlined in defendants' earlier affidavits filed pursuant to this section within fifteen (15) calendar days after the change is implemented.

C. Defendants shall keep all records of all efforts made to preserve and divest the Divestiture Assets until one year after such divestitures have been completed.

X. Compliance Inspection

A. For the purposes of determining or securing compliance with this Final Judgment, or of determining whether the Final Judgment should be modified or vacated, and subject to any legally recognized privilege, from time to time authorized representatives of the United States Department of Justice, including consultants and other persons retained by the United States, shall, upon written request of an authorized representative of the Assistant Attorney General in charge of the Antitrust Division, and on reasonable notice to defendants, be permitted:

1. Access during defendants' office hours to inspect and copy, or at the option of the United States, to require defendants to provide hard or electronic copies of, all books, ledgers, accounts, records, data and documents in the possession, custody, or control of defendants, relating to any matters contained in this Final Judgment; and

2. To interview, either informally or on the record, defendants' officers, employees, or agents, who may have their individual counsel present, regarding such matters. The interviews shall be subject to the reasonable convenience of the interviewee and without restraint or interference by defendant.

B. Upon the written request of an authorized representative of the Assistant Attorney General in charge of the Antitrust Division, defendants shall submit written reports or responses to written interrogatories, under oath if requested, relating to any of the matters contained in this Final Judgment as may be requested.

C. No information or documents obtained by the means provided in this section shall be divulged by the United States to any person other than an authorized representative of the executive branch of the United States, except in the course of legal proceedings to which the United States is a party (including grand jury proceedings), or for the purpose of securing compliance with this Final Judgment, or as otherwise required by law.

D. If, at the time information or documents are furnished by defendants to the United States, defendants represent and identify in writing the material in any such information or documents to which a claim of protection may be asserted under Rule 26(c)(7) of the Federal Rules of Civil Procedure, and defendants mark each pertinent page of such material, ''Subject to claim of protection under Rule 26(c)(7) of the Federal Rules of Civil Procedure,'' then the United States shall give defendants ten (10) calendar days notice prior to divulging such material in any legal proceeding (other than a grand jury proceeding).

XI. No Reacquisition

Defendants may not reacquire any part of the Divestiture Assets during the term of this Final Judgment.

XII. Retention of Jurisdiction

This Court retains jurisdiction to enable any party to this Final Judgment to apply to this Court at any time for further orders and directions as may be necessary or appropriate to carry out or construe this Final Judgment, to modify any of its provisions, to enforce

compliance, and to punish violations of its provisions.

XIII. Expiration of Final Judgment

Unless this Court grants an extension, this Final Judgment shall expire ten years from the date of its entry.

XIV. Public Interest Determination

Entry of this Final Judgment is in the public interest. The parties have complied with the requirements of the Antitrust Procedures and Penalties Act, 15 U.S.C. 16, including making copies available to the public of this Final Judgment, the Competitive Impact Statement, and any comments thereon and the United States's responses to comments. Based upon the record before the Court, which includes the Competitive Impact Statement and any comments and response to comments filed with the Court, entry of this Final Judgment is in the public interest.

Date: _____

Court approval subject to procedures of the Antitrust Procedures and Penalties Act, 15 U.S.C. 16.

_____

United States District Judge

United States District Court for the District of Columbia

United States of America, Plaintiff, v. *Vulcan Materials Company and Florida Rock Industries, Inc.*, Defendants.

Case: 1:07-cv-02044
Assigned To: Sullivan, Emmet G.
Assign. Date: 11/13/2007
Description: Antitrust
Deck Type: Antitrust
Date Stamp:

Competitive Impact Statement

Plaintiff United States of America (''United States''), pursuant to Section 2(b) of the Antitrust Procedures and Penalties Act (''APPA'' or ''Tunney Act''), 15 U.S.C. 16(b)–(h), files this Competitive Impact Statement relating to the proposed Final Judgment submitted for entry in this civil antitrust proceeding.

I. Nature and Purpose of the Proceeding

The United States filed a civil antitrust Complaint on November 13, 2007, seeking to enjoin the proposed acquisition by Vulcan Materials Company (''Vulcan'') of Florida Rock Industries, Inc. (''Florida Rock''). The Complaint alleges that the likely effect of this acquisition would be to lessen competition substantially in the production, distribution, and sale of coarse aggregate in certain areas of Georgia, Tennessee and Virginia, in violation of Section 7 of the Clayton Act, 15 U.S.C. 18. This loss of competition likely would result in higher prices for coarse aggregate in the affected areas.

At the same time the Complaint was filed, the United States also filed a Hold Separate Stipulation and Order and a proposed Final Judgment, which were designed to eliminate the anticompetitive effects of the acquisition. Under the proposed Final Judgment, which is explained more fully below, Vulcan and Florida Rock are required to divest single coarse aggregate quarries in Chattanooga, Tennessee, Columbus, Georgia, and Richmond, Virginia; four quarries and one site that is being developed for use as a quarry in the western and southern parts of the Atlanta area; and a distribution yard in Chesapeake, Virginia. Until the divestitures required by the Final Judgment have been accomplished, the Hold Separate Stipulation and Order requires Vulcan and Florida Rock to preserve, maintain, and continue to operate the plants discussed above (hereafter ''Divestiture Assets'') as independent, ongoing, economically viable competitive businesses held entirely separate, distinct, and apart from those of defendants' other operations.

The United States, Vulcan, and Florida Rock have stipulated that the proposed Final Judgment may be entered after compliance with the APPA. Entry of the proposed Final Judgment would terminate this action, except that the Court would retain jurisdiction to construe, modify, or enforce the provisions of the proposed Final Judgment and to punish violations thereof.

II. Description of the Events Giving Rise to the Alleged Violation

A. The Defendants and the Proposed Transaction

Vulcan is a New Jersey corporation with its principal place of business in Birmingham, Alabama. It is the nation's largest producer of construction aggregates, and is also a major provider of other construction materials and related services. In 2006, Vulcan shipped approximately 255 million tons of construction aggregates—the majority of which were coarse aggregate—to customers in 21 states, the District of Columbia, and Mexico. Its 2006 sales were over $3 billion.

Florida Rock is a Florida corporation with its principal place of business in Jacksonville, Florida. It produces, distributes, and sells, among other products, construction aggregates, ready mix concrete, prestressed concrete, and cement. Its sales are concentrated in the southeastern and mid-Atlantic states. In 2006, Florida Rock shipped approximately 45 million tons of construction aggregates, a majority of which were coarse aggregate, and reported total sales of approximately $1.4 billion.

On February 19, 2007, Vulcan and Florida Rock entered into an agreement for Vulcan to acquire Florida Rock in a cash-and-stock transaction valued at approximately $4.6 billion.

B. The Competitive Effects of the Transaction on the Market for Coarse Aggregate.

1. Relevant Product Market

The Complaint alleges that the production, distribution, and sale of coarse aggregate is a relevant product market within the meaning of Section 7 of the Clayton Act. Coarse aggregate is a type of construction aggregate, and includes crushed stone of varying sizes produced at quarries or mines.[1] Among other things, it is used as base material for roads and other construction sites and for the production of ready mix concrete and asphalt. Different sizes of coarse aggregate are needed to meet different project specifications.

There are no reliable substitutes for coarse aggregate because it differs from other products in its physical composition, functional characteristics, customary uses, consistent availability, and pricing. To the extent that any substitutes exist, most customers already use these to the full extent possible in light of the limits on their availability and the amounts that can be used in a given product, and cannot use more of them in place of coarse aggregate in response to an increase in the price of coarse aggregate. The Complaint alleges that a small but significant post-acquisition increase in the price of coarse aggregate would not cause its purchasers to substitute another product in sufficient quantities so as to make such a price increase unprofitable. Accordingly, the production, distribution, and sale of coarse aggregate is a relevant product market.

2. Relevant Geographic Markets

Coarse aggregate is a bulky, heavy, and relatively low-value product. In some markets, coarse aggregate is delivered to customers exclusively by truck. In other markets, the lack of native coarse aggregate sources and the availability of rail and/or navigable waterways makes it economical to rail

[1] Construction aggregates include crushed stone, grave, sand, recycled asphalt, and recycled concrete.

barge, and/or ship coarse aggregate directly to customer plants or job sites, or, much more frequently, to a distribution yard from which it is picked up by truck and delivered to the end customer. The cost of transporting coarse aggregate is high compared to its value, which limits the distance it can be economically transported from a quarry or distribution yard to a ready mix concrete or asphalt plant or job site. Transportation costs, as well as the location of competitors relative to a customer's plant or job site, thus limit the geographic area within which a coarse aggregate supplier can effectively compete.

The Complaint alleges that there are a number of geographic areas that constitute geographic markets in which the proposed acquisition by Vulcan of Florida Rock will harm competition in the production, distribution, and sale of coarse aggregate. As discussed below, in each of these geographic markets, Vulcan and Florida Rock quarries face limited competition from other suppliers in the delivery of coarse aggregate to customers in the market and, because of transportation costs, a small but significant post-acquisition increase in the price of coarse aggregate would not cause customers to procure coarse aggregate from quarries farther away.

a. Northwest Atlanta

Florida Rock owns and operates a coarse aggregate quarry located in Cedarton, Georgia, known as the Six Mile quarry. This quarry serves a geographic area that includes, among other areas, all or part of Floyd, Polk, Haralson, and Bartow Counties in Georgia (hereafter referred to as ''Northwest Atlanta''). Customers with plants or jobs within Northwest Atlanta may, depending on the location of their plant or job sites, also economically procure coarse aggregate from Vulcan's Adairsville, Bartow, and Rockmart quarries and from another competitor's quarry located in Cartersville, Georgia.

b. West Atlanta

Florida Rock owns and operates a coarse aggregate quarry located in Yorkville, Georgia, known as the Paulding quarry. This quarry serves a geographic area that includes, among other areas, all or part of Paulding, Douglas, Carroll, Haralson, Polk, and Cobb Counties in Georgia (hereafter referred to as ''West Atlanta''). Customers with plants or jobs within West Atlanta may, depending on the location of their plant or job sites, also economically procure coarse aggregate from Vulcan's Villa Rica, Kennesaw, and Lithia Springs quarries and from the quarries of other competitors located in Dallas, Georgia, and Douglasville, Georgia.

c. Southwest Atlanta

Florida Rock owns and operates a coarse aggregate quarry located in Tyrone, Georgia, known as the Tyrone quarry. This quarry serves a geographic area that includes, among other areas, all or part of Fulton, Coweta, Fayette, and Clayton Counties in Georgia (hereafter referred to as ''Southwest Atlanta''). Customers with plants or jobs within Southwest Atlanta may, depending on the location of their plant or job sites, also economically procure coarse aggregate from Vulcan's Madras quarry and from another competitor's quarry located in Tyrone, Georgia.

d. South Atlanta

Florida Rock owns and operates a coarse aggregate quarry located in Riverdale, Georgia, known as the Forest Park quarry. This quarry serves a geographic area that includes, among other areas, all or part of Fulton, Clayton, Henry, DeKalb, and Fayette Counties in Georgia (hereafter referred to as ''South Atlanta''). Customers with plants or jobs within South Atlanta may, depending on the location of their plant or job sites, also economically procure coarse aggregate from Vulcan's Red Oak quarry and from another competitor's quarry located in College Park, Georgia.

e. Southeast Atlanta

Florida Rock owns and operates a coarse aggregate quarry located in Zotella, Georgia, known as the Griffin quarry. This quarry serves a geographic area that includes, among other areas, all or part of Spalding and Henry Counties in Georgia (hereafter referred to as ''Southeast Atlanta''). Customers with plants or jobs within Southeast Atlanta may, depending on the location of their plant or job sites, also economically procure coarse aggregate from Vulcan's Stockbridge quarry. In addition, Vulcan is in the process of opening a new quarry in Butts County, Georgia, expected to be operational in 2008, from which it plans to serve, among other areas, customers in all or part of Southeast Atlanta.

f. Columbus

Florida Rock owns a majority interest in a company that owns and operates a coarse aggregate quarry located in Columbus, Georgia, known as the Columbus quarry. This quarry serves a geographic area that includes, among other areas, all or part of Muscogee and Harris Counties in Georgia (hereafter referred to as ''Columbus''). Customers with plants or jobs within Columbus may, depending on the location of their plant or job sites, also economically procure coarse aggregate from Vulcan's Barin quarry and from another competitor's quarry located in Midland, Georgia.

g. Chattanooga

Florida Rock owns and operates a coarse aggregate quarry located in Chattanooga, Tennessee, known as the Jersey Pike quarry. This quarry serves a geographic area that includes, among other areas, all or part of Hamilton County in Tennessee (hereafter referred to as ''Chattanooga''). Customers with plants or jobs within Chattanooga may, depending on the location of their plant or job sites, also economically procure coarse aggregate from Vulcan's Chattanooga quarry and from another competitor's quarries located in Chattanooga, Tennessee, and Ringgold, Georgia.

h. South Hampton Roads

Florida Rock owns and operates a coarse aggregate quarry located in Richmond, Virginia, known as the Richmond quarry, a coarse aggregate quarry located in Havre de Grace, Maryland, known as the Havre de Grace quarry, and a barge-served distribution yard located in Chesapeake, Virginia, known as the Gilmerton yard. Florida Rock also operates a distribution yard owned by a third party located in Chesapeake, Virginia. Via these distribution yards, Florida Rock serves a geographic area that includes, among other areas, all or part of the cities of Norfolk, Suffolk, Portsmouth, Chesapeake, and Virginia Beach in Virginia (hereafter referred to as ''South Hampton Roads''). Customers with plants or jobs within South Hampton Roads may, depending on the location of their plant or job sites, also economically procure coarse aggregate from Vulcan rail and barge terminals supplied by Vulcan's Richmond, Lawrenceville, and Skippers quarries. Other quarries cannot on a regular basis compete successfully for customers with plants or jobs in South Hampton Roads because they do not have appropriate distribution facilities in the area and/or quarries similarly proximate to rail lines or navigable water sources.

3. Anticompetitive Effects of the Acquisition

In each relevant geographic area, the proposed acquisition will eliminate the competition between Vulcan and Florida Rock and substantially increase market concentration. In Southeast

Atlanta and South Hampton Roads, it will reduce the number of suppliers of most specifications of coarse aggregate from two to one. In Northwest Atlanta, Southwest Atlanta, South Atlanta, Columbus, and Chattanooga, the proposed acquisition will reduce the number of coarse aggregate suppliers from three to two generally, and for some customers and projects, will reduce the number from two to one. In West Atlanta, the proposed acquisition will reduce the number of coarse aggregate suppliers from four to three generally, and for some customers and projects, will reduce the number from three to two.

The proposed acquisition will substantially increase the likelihood that Vulcan will unilaterally increase the price of coarse aggregate to a significant number of customers in all of the relevant geographic areas. The response of other coarse aggregate suppliers in the relevant geographic markets would not be sufficient to constrain a unilateral exercise of market power by Vulcan after the acquisition because those suppliers likely would not have sufficient capacity and/or incentives to increase production and sales enough to defeat an anticompetitive price increase by Vulcan. State permits and county zoning restrictions in many cases limit quarries' hours of operation and/or production levels, and many coarse aggregate suppliers face practical limitations on the amount of truck traffic their facilities can handle. Moreover, because coarse aggregate mined trom quarries is a depletable natural resource and every quarry has finite reserves, every sale by a supplier today represents a tradeoff against future sales.

Likewise, the response of customers would be insufficient to constrain a unilateral exercise of market power by Vulcan. To the extent that cost-effective substitutes exist, these already are being used to the full extent possible, and customers would not increase their use of these substitutes in response to an increase in the price of coarse aggregate. Thus, customers would not be able to prevent Vulcan's exercise of market power.

In addition, and notwithstanding competitor responses, post-acquisition Vulcan will be able to increase prices to those customers that have plants or job sites for which both a Vulcan quarry and a Florida Rock quarry are closer than any other quarries producing coarse aggregate meeting their specifications. Coarse aggregate suppliers know the locations of their competitors' quarries and the distance from their own quarries and their competitors' quarries to a customer's plant or job site. Generally, because of transportation costs, the farther a supplier's closest competitor is from a job site, the less price competition that supplier faces for that project. Post-acquisition, in instances where Vulcan and Florida Rock quarries would be the closest quarries to a customer's plant or project and the next closest coarse aggregate supplier's plant is farther from the customer's plant or project, the combined firm, using the knowledge of its competitors' quarry locations, would be able to charge such customers higher prices.

Further, the proposed acquisition is likely to facilitate anticompetitive coordination among the remaining coarse aggregate suppliers in Northwest Atlanta, West Atlanta, Southwest Atlanta, South Atlanta, Columbus, and Chattanooga. Coarse aggregate is homogeneous and suppliers have access to information about competitors' output, capacity, and costs. Given these market conditions, eliminating Florida Rock as one of the few coarse aggregate competitors is likely to further increase the ability of the remaining competitors to coordinate successfully.

Finally, timely and successful entry into the production, distribution, and sale of coarse aggregate is unlikely in any of the geographic areas and thus will not defeat anticompetitive unilateral or coordinated price increases resulting from the proposed acquisition. Securing the proper site for a coarse aggregate quarry or mine is difficult, time-consuming, and costly; it requires the investigation and extensive testing of candidate sites to find ones with adequate reserves of sufficient quality, and can require negotiations with multiple landowners as well as with government officials. Additional difficulties face a new entrant seeking to provide coarse aggregate to South Hampton Roads. In South Hampton Roads, the area's geology is such that coarse aggregate for most applications must be imported from outside the area. For an entrant to compete effectively in South Hampton Roads with Vulcan post-acquisition, that entrant must pair a new or existing rail-or water-served quarry with a distribution yard in South Hampton Roads that is capable of receiving coarse aggregate from such a quarry. Rail-or water-served quarries situated to compete effectively in South Hampton Roads, and the proper sites for distribution yards to serve such quarries, are scarce. In all of the relevant geographic markets the location of a quarry or yard is important due to the high cost of transporting coarse aggregate, but there are very few sites, especially in metropolitan areas, on which to locate coarse aggregate operations.

Obtaining necessary zoning variances and government permits for a coarse aggregate quarry can also be difficult, time-consuming, and costly. In metropolitan areas, land of the necessary size and geology is often already utilized or does not have the appropriate zoning, and obtaining zoning variances can be extremely difficult. Attempts to open a new coarse aggregate quarry or mine, especially in metropolitan areas (such as West Atlanta, Southwest Atlanta, South Atlanta, Columbus, Chattanooga, and South Hampton Roads) but also frequently in rural areas, often face fierce public opposition, which delays and raises the expense of opening such operations or prevents such projects altogether. In addition, state and federal water, air quality, and other permitting process requirements must be met, which can take from months to years.

Finally, even after a quarry or mine site is selected, acquired, and properly zoned and permitted, the owner must spend significant time and resources to prepare the land and install the equipment necessary to run the operation. As a result of all of these costly and time-consuming barriers to entry, entry by any other firm. into the coarse aggregate market in the relevant geographic areas will not be timely, likely, or sufficient to defeat an anti competitive price mcrease.

III. Explanation of the Proposed Final Judgment

A. The Divestiture Assets

The divestitures provided for in the proposed Final Judgment will eliminate the anticompetitive effects of the acquisition in the markets for the production, distribution, and sale of coarse aggregate in all of the relevant geographic markets. In each market, the divestitures will establish a new, independent, and economically viable competitor.

The Divestiture Assets include the following quarries and yard:

a. The Florida Rock Six Mile quarry, located at 3785 Cave Springs Road, Cedarton, Georgia, divestiture of which will remedy the competitive concerns in Northwest Atlanta;

b. The Florida Rock Paulding quarry, located at 112 Quarry Road, Yorkville, Georgia, divestiture of which will remedy the competitive concerns in West Atlanta;

c. The Florida Rock Tyrone quarry, located at 240 Rockwood Road, Tyrone,

Georgia, divestiture of which will remedy the competitive concerns in Southwest Atlanta;

d. The Vulcan Red Oak quarry, located at 5414 Buffington Road, Red Oak, Georgia, divestiture of which will remedy the competitive concerns in South Atlanta;

e. The Vulcan quarry under development in Butts County, located on Greer Dairy Road, Jackson, Georgia, divestiture of which will remedy the competitive concerns in Southeast Atlanta;

f. The Florida Rock interest in Columbus Quarry LLC, which owns the Columbus quarry, located at 3001 Smith Road, Columbus, Georgia, divestiture of which will remedy the competitive concerns in Columbus;

g. The Florida Rock Jersey Pike quarry, located at 2 Pelican Drive, Chattanooga, Tennessee, divestiture of which will remedy the competitive concerns in Chattanooga;

h. The Florida Rock Richmond quarry located at 2100 Deepwater Terminal Road, Richmond, Virginia (but excluding the Florida Rock ready mix concrete plant, the real property necessary for the operation of the plant (provided the conveyance of such property does not interfere with the operation of the Richmond quarry), and all other tangible and intangible assets exclusively used in the plant's operations) and, at the option of the Acquirer, use of the real property, parking lot, equipment shop, and office building equivalent to that which Florida Rock currently has for its quarry operations, divestiture of which (in addition to the yard listed in Paragraph (i)) will remedy the competitive concerns in South Hampton Roads; and

i. in South Hampton Roads, the Florida Rock Gilmerton yard, located at 4606 Bainbridge Boulevard, Chesapeake, Virginia (but excluding the Florida Rock ready mix concrete plant, the real property necessary for the operation of the plant (provided the conveyance of such property does not interfere with the operation of the Gilmerton yard), and all other tangible and intangible assets exclusively used in the plant's operations) and, at the option of the Acquirer, use of the real property, parking lot, equipment shop, fuel station, and office building equivalent to that which Florida Rock currently has for its operation of the yard, divestiture of which (in addition to the quarry listed in Paragraph (h)) will remedy the competitive concerns in South Hampton Roads.

The proposed merger does not raise competitive concerns with respect to the sale of ready mix concrete in either Richmond or South Hampton Roads. Thus, parts (h) and (i) of the Divestiture Assets definition above excludes property related to Florida Rock's ready mix concrete operations located at the Richmond quarry and Gilmerton yard properties that is not necessary to the operation of the quarry and coarse aggregate yard, and specifically grant back to the Acquirer the right to use real property and facilities that are currently used by both the coarse aggregate and the ready mix operations.

The Divestiture Assets also include all tangible assets used in or for the above-listed quarries and yard as well as all intangible assets used in the development, production, servicing, distribution, and sale of products produced by or in the quarries or stored in the yard.

The sale of the Divestiture Assets according to the terms of the proposed Final Judgment will ensure that Vulcan's acquisition of Florida Rock does not harm competition in any of the affected geographic areas.

B. Selected Provisions of the Proposed Final Judgment

In antitrust cases involving mergers in which the United States seeks a divestiture remedy, it requires completion of the divestiture within the shortest time period reasonable under the circumstances. A quick divestiture has the benefits of restoring competition lost in the acquisition and reducing the possibility of dissipation of the value of the assets. Paragraph IV(A) of the proposed Final Judgment requires Defendants to divest the Divestiture Assets as viable ongoing businesses within 90 days after the filing of the Complaint in this matter or five days after notice of the entry of the Final Judgment by the Court, whichever is later.[2]

Paragraph IV (D) provides that Defendants shall not impede in any way any person from competing for or obtaining the lease to the Branscome Chesapeake yard. This yard is owned by a contractor who leases it to other companies. Currently, the lessee is Florida Rock, which barges coarse aggregate to the yard to supply the owner's operations. The lease with Florida Rock expires on December 31, 2007. Paragraph IV(D) is designed to ensure that the buyer of the Florida Rock Richmond quarry and Florida Rock Gilmerton yard divestiture assets, or any other interested party, has the opportunity to compete for the lease upon its expiration.

The Vulcan quarry under development in Butts County is not yet operational, but Paragraph IV(F) requires Defendants to warrant to the Acquirer that they have obtained all environmental, zoning, or other permits required to begin production of coarse aggregate at the Butts site.

Paragraph IV(J) of the proposed Final Judgment provides that the sale of the Divestiture Assets may be made to one or more Acquirers, except that the Richmond quarry and Gilmerton yard must be divested to a single acquirer. This provision ensures that the owner of the barge-served quarry also owns a barge-served distribution facility in South Hampton Roads so that it can compete effectively in South Hampton Roads.

Paragraph IV(J) of the proposed Final Judgment also provides that the assets must be divested in such a way as to satisfy the United States in its sole discretion that the operations can and will be operated by the purchaser as a viable, ongoing business that can compete effectively in the relevant markets. The provisions of Paragraph IV are designed to ensure that Defendants take all reasonable steps necessary to accomplish the divestitures quickly and cooperate with prospective purchasers.

Finally, Paragraph V of the proposed Final Judgment provides that in the event that Defendants do not accomplish the divestitures within the periods prescribed in the proposed Final Judgment, the Court will appoint a trustee selected by the United States to effect the divestitures. If a trustee is appointed, the proposed Final Judgment provides that Defendants will pay all costs and expenses of the trustee. The trustee's commission will be structured so as to provide an incentive for the trustee based on the price obtained and the speed with which the divestitures are accomplished. After his or her appointment becomes effective, the trustee will file monthly reports with the Court and the United States setting forth his or her efforts to accomplish the divestitures. If the divestitures have not been accomplished at the end of six months, the trustee and the United States will make recommendations to the Court, which shall enter such orders as appropriate in order to carry out the purpose of the trust, including extending the trust or the term of the trustee's appointment.

IV. Remedies Available to Potential Private Litigants

Section 4 of the Clayton Act, 15 U.S.C. 15, provides that any person who

[2] The Final Judgment also provides that this 90-day time period may be extended by the United States in its sole discretion for a total period not exceeding 60 calendar days, and that the Court will receive prior notice of any such extension.

has been injured as a result of conduct prohibited by the antitrust laws may bring suit in federal court to recover three times the damages the person has suffered, as well as costs and reasonable attorneys' fees. Entry of the proposed Final Judgment will neither impair nor assist the bringing of any private antitrust damage action. Under the provisions of Section 5(a) of the Clayton Act, 15 U.S.C. 16(a), the proposed Final Judgment has no *prima facie* effect in any subsequent private lawsuit that may be brought against Defendants.

V. Procedures Available for Modification of the Proposed Final Judgment

The United States and Defendants have stipulated that the proposed Final Judgment may be entered by the Court after compliance with the provisions of the APPA, provided that the United States has not withdrawn its consent. The APPA conditions entry upon the Court's determination that the proposed Final Judgment is in the public interest.

The APPA provides a period of at least sixty (60) days preceding the effective date of the proposed Final Judgment within which any person may submit to the United States written comments regarding the proposed Final Judgment. Any person who wishes to comment should do so within sixty (60) days of the date of publication of this Competitive Impact Statement in the **Federal Register,** or the last date of publication in a newspaper of the summary of this Competitive Impact Statement, whichever is later. All comments received during this period will be considered by the United States Department of Justice, which remains free to withdraw its consent to the proposed Final Judgment at any time prior to the Court's entry of judgment. The comments and the response of the United States will be filed with the Court and published in the **Federal Register.**

Written comments should be submitted to: Maribeth Petrizzi, Chief, Litigation II Section, Antitrust Division, United States Department of Justice, 1401 H St. NW., Suite 3000, Washington, DC 20530.

The proposed Final Judgment provides that the Court retains jurisdiction over this action, and the parties may apply to the Court for any order necessary or appropriate for the modification, interpretation, or enforcement of the Final Judgment.

VI. Alternatives to the Proposed Final Judgment

The United States considered, as an alternative to the proposed Final Judgment, a full trial on the merits against Defendants. The United States could have continued the litigation and sought preliminary and permanent injunctions against Vulcan's acquisition of Florida Rock. The United States is satisfied, however, that the divestiture of assets described in the proposed Final Judgment will preserve competition in the production, distribution, and sale of coarse aggregate in the relevant geographic markets identified by the United States. Thus, the proposed Final Judgment would achieve all or substantially all of the relief the United States would have obtained through litigation, but avoids the time, expense, and uncertainty of a full trial on the merits of the Complaint.

Vll. Standard of Review Under the APPA for the Proposed Final Judgment

The Clayton Act, as amended by the APPA, requires that proposed consent judgments in antitrust cases brought by the United States be subject to a sixty-day comment period, after which the Court shall determine whether entry of the proposed Final Judgment ''is in the public interest.'' 15 U.S.C. 16(e)(1). In making that determination, the court, in accordance with the statute as amended in 2004, is required to consider:

> (A) The competitive impact of such judgment, including termination of alleged violations, provisions for enforcement and modification, duration of relief sought, anticipated effects of alternative remedies actually considered, whether its terms are ambiguous, and any other competitive considerations bearing upon the adequacy of such judgment that the court deems necessary to a determination of whether the consent judgment is in the public interest; and
>
> (B) The impact of entry of such judgment upon competition in the relevant market or markets, upon the public generally and individuals alleging specific injury from the violations set forth in the complaint including consideration of the public benefit, if any, to be derived from a determination of the issues at trial.

15 U.S.C. 16(e)(1)(A)–(B); *see generally United States* v. *SBC Commc'ns, Inc.,* 489 F. Supp. 2d 1, 11 (D.D.C. 2007) (concluding that the 2004 amendments ''effected minimal changes'' to scope of review under Tunney Act, leaving review ''sharply proscribed by precedent and the nature of Tunney Act proceedings'').[3]

As the United States Court of Appeals for the District of Columbia Circuit has held, under the APPA a court considers, among other things, the relationship between the remedy secured and the specific allegations set forth in the government's complaint, whether the decree is sufficiently clear, whether enforcement mechanisms are sufficient, and whether the decree may positively harm third parties. *See United States* v. *Microsoft Corp.,* 56 F.3d 1448, 1458–62 (DC Cir. 1995). With respect to the adequacy of the relief secured by the decree, a court may not ''engage in an unrestricted evaluation of what relief would best serve the public.'' *United States* v. *BNS, Inc.,* 858 F.2d 456, 462 (9th Cir. 1988) (citing *United States* v. *Bechtel Corp.,* 648 F.2d 660, 666 (9th Cir. 1981)); *see also Microsoft,* 56 F.3d at 1460–62. Courts have held that:

> [t]he balancing of competing social and political interests affected by a proposed antitrust consent decree must be left, in the first instance, to the discretion of the Attorney General. The court's role in protecting the public interest is one of insuring that the government has not breached its duty to the public in consenting to the decree. The court is required to determine not whether a particular decree is the one that will best serve society, but whether the settlement is ''*within the reaches of the public interest.*'' More elaborate requirements might undermine the effectiveness of antitrust enforcement by consent decree.

Bechtel, 648 F.2d at 666 (emphasis added) (citations omitted).[4] In making its public interest determination, a district court ''must accord deference to the government's predictions about the efficacy of its remedies, and may not require that the remedies perfectly match the alleged violations because this may only reflect underlying weakness in the government's case or concessions made during negotiation.'' *SBC Commc'ns*, 489 F. Supp. 2d at 17; *see also Microsoft*, 56 F.3d at 1461 (noting the need for courts to be ''deferential to the government's predictions as to the effect of the proposed remedies''); *United States* v. *Archer-Daniels-Midland Co.*, 272 F. Supp. 2d 1, 6 (D.D.C. 2003) (noting that the court should grant due respect to the United States' prediction as to the effect of proposed remedies, its perception of

[3] The 2004 amendments substituted ''shall'' for ''may'' in directing relevant factors for the court to consider and amended the list of factors to focus on competitive considerations and to address potentially ambiguous judgment terms. Compare 15 U.S.C. 16(e) (2004), *with* 15 U.S.C. 16(e)(1) (2006).

[4] Cf. BNS, 858 F.2d at 464 (holding that the court's ''ultimate authority under the [APPA] is limited to approving or disapproving the consent decree''); *United States* v. *Gillette Co.*, 406 F. Supp. 713, 716 (D. Mass. 1975) (noting that, in this way, the court is constrained to ''look at the overall picture not hypercritically, nor with a microscope, but with an artist's reducing glass''). *See generally Microsoft*, 56 F.3d at 1461 (discussing whether ''the remedies [obtained in the decree are] so inconsonant with the allegations charged as to fall outside of the 'reaches of the public interest' '').

the market structure, and its views of the nature of the case).

Court approval of a consent decree requires a standard more flexible and less strict than that appropriate to court adoption of a litigated decree following a finding of liability. ''[A] proposed decree must be approved even if it falls short of the remedy the court would impose on its own, as long as it falls within the range of acceptability or is 'within the reaches of public interest.' '' *United States* v. *Am. Tel. & Tel. Co.*, 552 F. Supp. 131, 151 (D.D.C. 1982) (citations omitted) (quoting *United States* v. *Gillette Co.*, 406 F. Supp. 713, 716 (D. Mass. 1975)), *aff'd sub nom. Maryland* v. *United States*, 460 U.S. 1001 (1983)*; see also United States* v. *Alcan Aluminum Ltd.*, 605 F. Supp. 619, 622 (W.D. Ky. 1985) (approving the consent decree even though the court would have imposed a greater remedy). To meet this standard, the United States ''need only provide a factual basis for concluding that the settlements are reasonably adequate remedies for the alleged harms.'' *SBC Commc'ns*, 489 F. Supp. 2d at 17.

Moreover, the Court's role under the APPA is limited to reviewing the remedy in relationship to the violations that the United States has alleged in its Complaint, and does not authorize the Court to ''construct [its] own hypothetical case and then evaluate the decree against that case.'' *Microsoft*, 56 F.3d at 1459. Because the ''court's authority to review the decree depends entirely on the government's exercising its prosecutorial discretion by bringing a case in the first place,'' it follows that ''the court is only authorized to review the decree itself,'' and not to ''effectively redraft the complaint'' to inquire into other matters that the United States did not pursue. *Id.* at 1459–60. As this court recently confirmed in *SBC Communications*, courts ''cannot look beyond the complaint in making the public interest determination unless the complaint is drafted so narrowly as to make a mockery of judicial power.'' *SBC Commc'ns*, 489 F. Supp. 2d at 15.

In its 2004 amendments, Congress made clear its intent to preserve the practical benefits of utilizing consent decrees in antitrust enforcement, adding the unambiguous instruction ''[n]othing in this section shall be construed to require the court to conduct an evidentiary hearing or to require the court to permit anyone to intervene.'' 15 U.S.C. 16(e)(2). This instruction explicitly writes into the statute the standard intended by the Congress that enacted the Tunney Act in 1974, as Senator Tunney then explained: ''[t]he court is nowhere compelled to go to trial or to engage in extended proceedings which might have the effect of vitiating the benefits of prompt and less costly settlement through the consent decree process.'' 119 Cong. Rec. 24,598 (1973) (statement of Senator Tunney). Rather, the procedure for the public interest determination is left to the discretion of the court, with the recognition that the court's ''scope of review remains sharply proscribed by precedent and the nature of Tunney Act proceedings.'' *SBC Commc'ns*, 489 F. Supp. 2d at 11. [5]

VIII. Determinative Documents

There are no determinative materials or documents within the meaning of the APPA that were considered by the United States in formulating the proposed Final Judgment.

Dated: November 13, 2007.

Respectfully submitted,

Robert W. Wilder, Esquire,

United States Department of Justice, Antitrust Division, Litigation II Section, 1401 H Street, NW., Suite 3000, Washington, DC 20530 (202) 307–6336

[FR Doc. 07–5902 Filed 12–3–07; 8:45 am]

BILLING CODE 4410–11–M

[5] See *United States* v. *Enova Corp.*, 107 F. Supp. 2d 10, 17 (D.D.C. 2000) (noting that the ''Tunney Act expressly allows the court to make its public interest determination on the basis of the competitive impact statement and response to comments alone''); S. Rep. No. 93–298, 93d Cong., 1st Sess., at 6 (1973) (''Where the public interest can be meaningfully evaluated simply on the basis of briefs and oral arguments, that is the approach that should be utilized.''); *United States* v. *Mid-Am. Dairymen, Inc.*, 1977–1 Trade Cas. (CCH) ¶ 61,508, at 71,980 (W.D. Mo. 1977) (''Absent a showing of corrupt failure of the government to discharge its duty, the Court, in making its public interest finding, should* * * carefully consider the explanations of the government in the competitive impact statement and its responses to comments in order to determine whether those explanations are reasonable under the circumstances.'').

DEPARTMENT OF JUSTICE

Drug Enforcement Administration

Manufacturer of Controlled Substances; Notice of Registration

By Notice dated August 16, 2007, and published in the **Federal Register** on August 27, 2007 (72 FR 49018), Boehringer Ingelheim Chemicals, Inc., 2820 N. Normandy Drive, Petersburg, Virginia 23805, made application by renewal to the Drug Enforcement Administration (DEA) to be registered as a bulk manufacturer of the basic classes of controlled substances listed in schedules I and II:

Drug	Schedule
Tetrahydrocannabinols (7370)	I
Amphetamine (1100)	II
Methylphenidate (1724)	II
Methadone (9250)	II
Methadone Intermediate (9254)	II
Dextropropoxyphene, bulk (non-dosage forms) (9273).	II
Fentanyl (9801)	II

The company plans to manufacture the listed controlled substances in bulk for sale to its customers for formulation into finished pharmaceuticals.

No comments or objections have been received. DEA has considered the factors in 21 U.S.C. 823(a) and determined that the registration of Boehringer Ingelheim Chemicals, Inc. to manufacture the listed basic classes of controlled substances is consistent with the public interest at this time. DEA has investigated Boehringer Ingelheim Chemicals, Inc. to ensure that the company's registration is consistent with the public interest. The investigation has included inspection and testing of the company's physical security systems, verification of the company's compliance with state and local laws, and a review of the company's background and history. Therefore, pursuant to 21 U.S.C. 823, and in accordance with 21 CFR 1301.33, the above named company is granted registration as a bulk manufacturer of the basic classes of controlled substances listed.

Dated: November 26, 2007.

Joseph T. Rannazzisi,

Deputy Assistant Administrator, Office of Diversion Control, Drug Enforcement Administration.

[FR Doc. E7–23480 Filed 12–3–07; 8:45 am]

BILLING CODE 4410–09–P

DEPARTMENT OF JUSTICE

Drug Enforcement Administration

Manufacturer of Controlled Substances; Notice of Registration

By Notice dated August 16, 2007, and published in the **Federal Register** on August 28, 2007, (72 FR 49315–49316), Cerilliant Corporation, 811 Paloma Drive, Suite A, Round Rock, Texas 78664, made application by renewal to the Drug Enforcement Administration (DEA) to be registered as a bulk manufacturer of the basic classes of controlled substances listed in schedules I and II:

Drug	Schedule
Cathinone (1235)	I
Methcathinone (1237)	I
N-Ethylamphetamine (1475)	I
N,N-Dimethylamphetamine (1480)	I
Aminorex (1585)	I
4-Methylaminorex (cis isomer) (1590)	I
Gamma-Hydroxybutyric acid (2010)	I
Methaqualone (2565)	I
Alpha-Ethyltryptamine (7249)	I
Lysergic acid diethylamide (7315)	I
Marihuana (7360)	I
Tetrahydrocannabinols (7370)	I
Mescaline (7381)	I
3,4,5-Trimethoxyamphetamine (7390)	I
4-Bromo-2,5-dimethoxyamphetamine (7391)	I
4-Bromo-2,5-dimethoxyphenethylamine (7392)	I
4-Methyl-2,5-dimethoxyamphetamine (7395)	I
2,5-Dimethoxyamphetamine (7396)	I
2,5-Dimethoxy-4-ethylamphetamine (7399)	I
3,4-Methylenedioxyamphetamine (7400)	I
5-Methoxy-3,4-methylenedioxyamphetamine (7401)	I
N-Hydroxy-3,4-methylendioxyamphetamine (7402)	I
3,4-Methylendioxy-N-ethylamphetamine (7404)	I
3,4-Methylenedioxymethamphetamine (7405)	I
4-Methoxyamphetamine (7411)	I
Alpha-methyltryptamine (7432)	I
Bufotenine (7433)	I
Diethyltryptamine (7434)	I
Dimethyltryptamine (7435)	I
Psilocybin (7437)	I
Psilocyn (7438)	I
Acetyldihydrocodeine (9051)	I
Benzylmorphine (9052)	I
Codeine-N-oxide (9053)	I
Dihydromorphine (9145)	I
Heroin (9200)	I
Hydromorphinol (9301)	I
Methyldihydromorphine (9304)	I
Morphine-N-oxide (9307)	I
Normorphine (9313)	I
Pholcodine (9314)	I
Acetylmethadol (9601)	I
Allylprodine (9602)	I
Alphacetylmethadol except levo-alphacetylmethadol (9603)	I
Alphameprodine (9604)	I
Alphamethadol (9605)	I
Betacetylmethadol (9607)	I
Betameprodine (9608)	I
Betamethadol (9609)	I
Betaprodine (9611)	I
Hydroxypethidine (9627)	I
Noracymethadol (9633)	I
Norlevorphanol (9634)	I
Normethadone (9635)	I
Trimeperidine (9646)	I
Phenomorphan (9647)	I
Para-Fluorofentanyl (9812)	I
3-Methylfentanyl (9813)	I
Alpha-Methylfentanyl (9814)	I
Acetyl-alpha-methylfentanyl (9815)	I
Beta-hydroxyfentanyl (9830)	I
Beta-hydroxy-3-methylfentanyl (9831)	I
Alpha-Methylthiofentanyl (9832)	I
3-Methylthiofentanyl (9833)	I
Thiofentanyl (9835)	I
Amphetamine (1100)	II
Methamphetamine (1105)	II
Phenmetrazine (1631)	II
Methylphenidate (1724)	II
Ambobarbital (2125)	II
Pentobarbital (2270)	II
Secobarbital (2315)	II
Glutethimide (2550)	II
Nabilone (7379)	II

Drug	Schedule
1-Phenylcyclohexylamine (7460)	II
Phencyclidine (7471)	II
1-Piperidinocyclohexanecarbonitrile (8603)	II
Alphaprodine (9010)	II
Cocaine (9041)	II
Codeine (9050)	II
Dihydrocodeine (9120)	II
Oxycodone (9143)	II
Hydromorphone (9150)	II
Diphenoxylate (9170)	II
Benzoylecgonine (9180)	II
Ethylmorphine (9190)	II
Hydrocodone (9193)	II
Levomethorphan (9210)	II
Levorphanol (9220)	II
Isomethadone (9226)	II
Meperidine (9230)	II
Methadone (9250)	II
Methadone intermediate (9254)	II
Dextropropoxyphene, bulk (non-dosage forms) (9273)	II
Morphine (9300)	II
Thebaine (9333)	II
Levo-alphacetylmethadol (9648)	II
Oxymorphone (9652)	II
Noroxymorphone (9668)	II
Racemethorphan (9732)	II
Alfentanil (9737)	II
Sufentanil (9740)	II
Fentanyl (9801)	II

The company plans to manufacture small quantities of the listed controlled substances to make reference standards which will be distributed to their customers.

No comments or objections have been received. DEA has considered the factors in 21 U.S.C. 823(a) and determined that the registration of Cerilliant Corporation to manufacture the listed basic classes of controlled substances is consistent with the public interest at this time. DEA has investigated Cerilliant Corporation to ensure that the company's registration is consistent with the public interest. The investigation has included inspection and testing of the company's physical security systems, verification of the company's compliance with state and local laws, and a review of the company's background and history. Therefore, pursuant to 21 U.S.C. 823, and in accordance with 21 CFR 1301.33, the above named company is granted registration as a bulk manufacturer of the basic classes of controlled substances listed.

Dated: November 26, 2007.

Joseph T. Rannazzisi,

Deputy Assistant Administrator, Office of Diversion Control, Drug Enforcement Administration.

[FR Doc. E7–23508 Filed 12–3–07; 8:45 am]

BILLING CODE 4410–09–P

DEPARTMENT OF JUSTICE

Drug Enforcement Administration

Manufacturer of Controlled Substances; Notice of Registration

By Notice dated July 31, 2007, and published in the **Federal Register** on August 9, 2007, (72 FR 44860–44861), Chattem Chemicals, Inc., 3801 St. Elmo Avenue, Building 18, Chattanooga, Tennessee 37409, made application by letter to the Drug Enforcement Administration (DEA) to be registered as a bulk manufacturer of the basic classes of controlled substances listed in schedule II:

Drug	Schedule
Lisdexamfetamine (1205)	II
Remifentanil (9739)	II

The company plans to manufacture the listed controlled substances in bulk for sale to its customers.

No comments or objections have been received. DEA has considered the factors in 21 U.S.C. 823(a) and determined that the registration of Chattem Chemicals, Inc. to manufacture the listed basic classes of controlled substances is consistent with the public interest at this time. DEA has investigated Chattem Chemicals, Inc. to ensure that the company's registration is consistent with the public interest. The investigation has included inspection and testing of the company's physical security systems, verification of the company's compliance with state and local laws, and a review of the company's background and history. Therefore, pursuant to 21 U.S.C. 823, and in accordance with 21 CFR 1301.33, the above named company is granted registration as a bulk manufacturer of the basic classes of controlled substances listed.

Dated: November 26, 2007.

Joseph T. Rannazzisi,

Deputy Assistant Administrator, Office of Diversion Control, Drug Enforcement Administration.

[FR Doc. E7–23510 Filed 12–3–07; 8:45 am]

BILLING CODE 4410–09–P

DEPARTMENT OF JUSTICE

Drug Enforcement Administration

Importer of Controlled Substances; Notice of Registration

By Notice dated September 21, 2007 and published in the **Federal Register** on September 27, 2007, (72 FR 54930), Chattem Chemicals, Inc., 3801 St. Elmo Avenue, Building 18, Chattanooga, Tennessee 37409, made application by renewal to the Drug Enforcement Administration (DEA) to be registered as an importer of the basic classes of controlled substances listed in schedule II:

Drug	Schedule
Methamphetamine (1105)	II
Phenylacetone (8501)	II
Raw Opium (9600)	II
Poppy Straw Concentrate (9670)	II

The company plans to import the listed controlled substances to manufacture bulk controlled substances for sale to its customers.

No comments or objections have been received. DEA has considered the factors in 21 U.S.C. 823(a) and 952(a) and determined that the registration of Chattem Chemicals, Inc. to import the basic classes of controlled substances is consistent with the public interest and with United States obligations under international treaties, conventions, or protocols in effect on May 1, 1971, at this time. DEA has investigated Chattem Chemicals, Inc. to ensure that the company's registration is consistent with the public interest. The investigation has included inspection and testing of the company's physical security systems, verification of the company's compliance with State and local laws, and a review of the company's background and history. Therefore, pursuant to 21 U.S.C. 952(a) and 958(a), and in accordance with 21 CFR 1301.34, the above named company is granted registration as an importer of the basic classes of controlled substances listed.

Dated: November 26, 2007.

Joseph T. Rannazzisi,

Deputy Assistant Administrator, Office of Diversion Control, Drug Enforcement Administration.

[FR Doc. E7–23512 Filed 12–3–07; 8:45 am]

BILLING CODE 4410–09–P

DEPARTMENT OF JUSTICE

Drug Enforcement Administration

Manufacturer of Controlled Substances; Notice of Registration

By Notice dated August 16, 2007, and published in the **Federal Register** on August 27, 2007, (72 FR 49020), Chemic Laboratories, Inc., 480 Neponset Street, Building 7, Canton, Massachusetts 02021, made application by renewal to the Drug Enforcement Administration (DEA) to be registered as a bulk manufacturer of Cocaine (9041), a basic class of controlled substance listed in schedule II.

The company plans to manufacture small quantities of the above listed controlled substance for distribution to its customers for the purpose of research.

No comments or objections have been received. DEA has considered the factors in 21 U.S.C. 823(a) and determined that the registration of Chemic Laboratories, Inc. to manufacture the listed basic class of controlled substance is consistent with the public interest at this time. DEA has investigated Chemic Laboratories, Inc. to ensure that the company's registration is consistent with the public interest. The investigation has included inspection and testing of the company's physical security systems, verification of the company's compliance with State and local laws, and a review of the company's background and history. Therefore, pursuant to 21 U.S.C. 823, and in accordance with 21 CFR 1301.33, the above named company is granted registration as a bulk manufacturer of the basic class of controlled substance listed.

Dated: November 26, 2007.

Joseph T. Rannazzisi,

Deputy Assistant Administrator, Office of Diversion Control, Drug Enforcement Administration.

[FR Doc. E7–23511 Filed 12–3–07; 8:45 am]

BILLING CODE 4410–09–P

DEPARTMENT OF JUSTICE

Drug Enforcement Administration

Ammar Sabbagh; Denial of Application

On June 12, 2006, the Deputy Assistant Administrator, Office of Diversion Control, Drug Enforcement Administration, issued an Order to Show Cause to Ammar Sabbagh (Respondent), of Sheridan, Oregon. The Show Cause Order proposed the denial of Respondent's pending application for a DEA Certificate of Registration as a distributor of the list I chemicals ephedrine and pseudoephedrine, on the ground that his ''registration would be inconsistent with the public interest.'' Show Cause Order at 1 (quoting 21 U.S.C. 823(h)).

More specifically, the Show Cause Order alleged that on November 4, 2005, Respondent pled guilty to conspiring to distribute pseudoephedrine, in violation of 21 U.S.C. 841(c)(2)–(3), and 846. *Id.* at 2. The Show Cause Order thus alleged that Respondent's proposed sales of list I chemical products would be inconsistent with the public interest. *Id.* The Show Cause Order further informed Respondent of his right to request a hearing on the allegations. *Id.*

On June 19, 2006, the Show Cause Order was served on Respondent by certified mail addressed to him at his new residence at the Federal Correctional Institution in Sheridan, Oregon. Since that time, neither Respondent, nor anyone purporting to represent him, has responded. Because (1) more than thirty days have passed since service of the Show Cause Order, and (2) Respondent did not timely request a hearing, I conclude that Respondent has waived his right to a hearing. *See* 21 CFR 1301.43(d). I therefore enter this Final Order without a hearing based on relevant material contained in the investigative file and make the following findings.

Findings

On December 10, 1999, Respondent applied for a DEA Certificate of Registration to distribute the list I chemicals ephedrine and pseudoephedrine. *See* 21 U.S.C. 802(34). While both chemicals have therapeutic uses, they are easily extracted from non-prescription drug products and used in the illicit manufacture of methamphetamine, a schedule II controlled substance. *See* 21 CFR 1308.12(d).

Methamphetamine is a powerful and addictive central nervous system stimulant. *See Gregg Brothers Wholesale Co., Inc.,* 71 FR 59830 (2006). As noted in numerous agency orders, the illegal manufacture and abuse of methamphetamine pose a grave threat to this country. Methamphetamine abuse has destroyed numerous lives and families and ravaged communities. Moreover, because of the toxic nature of the chemicals used to make methamphetamine, its manufacture causes serious environmental harms. *See, e.g., Id.*

During the course of investigating Respondent's application, DEA became aware that he was selling large quantities of pseudoephedrine to an individual he knew was using methamphetamine. Thereafter, Respondent also began supplying pseudoephedrine to several methamphetamine traffickers. Respondent also met with a confidential source and agreed to supply him with twenty to twenty-five cases a month of pseudoephedrine.

On March 2, 2005, a federal grand jury returned an indictment which charged Respondent with conspiring to distribute pseudoephedrine, having knowledge and reasonable cause to believe that it would be used to manufacture methamphetamine. First Superseding Indictment, *United States* v. *Sabbagh, et. al.,* No. CR04–398L, (W.D.Wash.) (citing 21 U.S.C. 841(c) & (e); *Id.* 846). On March 10, 2005, Respondent pled guilty to the charge, and on November 4, 2005, the United

States District Court entered a judgment of conviction. The court then sentenced Respondent to terms of thirty-six months imprisonment followed by three years of supervised release. *See United States* v. *Sabbagh,* Judgment at 1–3.

Discussion

Section 303(h) of the CSA provides that ''[t]he Attorney General shall register an applicant to distribute a list I chemical unless the Attorney General determines that registration of the applicant is inconsistent with the public interest.'' 21 U.S.C. 823(h). In making this determination, Congress directed that I consider the following factors:

(1) Maintenance by the applicant of effective controls against diversion of listed chemicals into other than legitimate channels;

(2) Compliance by the applicant with applicable Federal, State, and local law;

(3) Any prior conviction record of the applicant under Federal or State laws relating to controlled substances or to chemicals controlled under Federal or State law;

(4) Any past experience of the applicant in the manufacture and distribution of chemicals; and

(5) Such other factors as are relevant to and consistent with the public health and safety.

Id.

''These factors are considered in the disjunctive.'' *Joy's Ideas,* 70 FR 33195, 33197 (2005). I may rely on any one or a combination of factors, and may give each factor the weight I deem appropriate in determining whether an application for a registration should be denied. *See, e.g.*, *David M. Starr,* 71 FR 39367, 39368 (2006); *Energy Outlet,* 64 FR 14269 (1999). Moreover, I am ''not required to make findings as to all of the factors.'' *Hoxie* v. *DEA,* 419 F.3d 477, 482 (6th Cir. 2005); *Morall* v. *DEA,* 412 F.3d 165, 173–74 (D.C. Cir. 2005).

Given Respondent's conviction for conspiring to distribute pseudoephedrine knowing that it would be used to manufacture methamphetamine, I conclude that factor three is dispositive and that it is unnecessary to make findings as to the remaining factors. Respondent's conviction indisputably establishes that granting him a registration would be ''inconsistent with the public interest.'' 21 U.S.C. 823(h). Respondent's application will therefore be denied.

Order

Pursuant to the authority vested in me by 21 U.S.C. 823(h), and 28 CFR 0.100(b) & 0.104, I order that the application of Ammar Sabbagh for a DEA Certificate of Registration as a distributor of list I chemicals be, and it hereby is, denied. This order is effective January 3, 2008.

Dated: November 21, 2007.

Michele M. Leonhart,

Deputy Administrator.

[FR Doc. E7–23476 Filed 12–3–07; 8:45 am]

BILLING CODE 4410–09–P

DEPARTMENT OF LABOR

Office of the Secretary

Submission for OMB Review: Comment Request

November 28, 2007.

The Department of Labor (DOL) hereby announces the submission the following public information collection requests (ICR) to the Office of Management and Budget (OMB) for review and approval in accordance with the Paperwork Reduction Act of 1995 (Pub. L. 104–13, 44 U.S.C. chapter 35). A copy of each ICR, with applicable supporting documentation; including among other things a description of the likely respondents, proposed frequency of response, and estimated total burden may be obtained from the RegInfo.gov Web site at *http://www.reginfo.gov/public/do/PRAMain* or by contacting Darrin King on 202–693–4129 (this is not a toll-free number)/e-mail: *king.darrin@dol.gov.*

Interested parties are encouraged to send comments to the Office of Information and Regulatory Affairs, *Attn:* Brenda Aguilar, OMB Desk Officer for the Employee Benefits Security Administration (EBSA), Office of Management and Budget, Room 10235, Washington, DC 20503, Telephone: 202–395–7316/Fax: 202–395–6974 (these are not toll-free numbers), E-mail: *OIRA_submission@omb.eop.gov* within 30 days from the date of this publication in the **Federal Register**. In order to ensure the appropriate consideration, comments should reference the OMB Control Number (see below).

The OMB is particularly interested in comments which:

- Evaluate whether the proposed collection of information is necessary for the proper performance of the functions of the agency, including whether the information will have practical utility;
- Evaluate the accuracy of the agency's estimate of the burden of the proposed collection of information, including the validity of the methodology and assumptions used;
- Enhance the quality, utility, and clarity of the information to be collected; and
- Minimize the burden of the collection of information on those who are to respond, including through the use of appropriate automated, electronic, mechanical, or other technological collection techniques or other forms of information technology, *e.g.*, permitting electronic submission of responses.

Agency: Employee Benefits Security Administration.

Type of Review: Extension without change of currently approved collection.

Title: Notice to Participants and Beneficiaries and the Federal Government of Electing One Percent Increased Cost Exemption.

OMB Control Number: 1210–0105.

Affected Public: Private Sector: Business or other for-profit.

Estimated Number of Respondents: 10.

Estimated Total Annual Burden Hours: 300.

Estimated Total Annual Cost Burden: $7,000.

Description: Group health plans may be exempted from Mental Health Party Act of 1996 (Pub. L. 104–194) requirements for parity between mental health and medical/surgical benefits if parity would result in cost increase of one percent or more. This request pertains to notice to participants and beneficiaries and the Federal Government that is required in order to make use of the exemption. For additional information, please refer to a related notice published at 72 FR 54072 on September 21, 2007 and the interim final rule published at 62 FR 66931 on December 22, 1997.

Agency: Employee Benefits Security Administration.

Type of Review: Extension without change of currently approved collection.

Title: Calculation and Disclosure of Documentation of Eligibility for Exemption.

OMB Control Number: 1210–0106.

Affected Public: Private Sector: Business or other for-profit.

Estimated Number of Respondents: 10.

Estimated Total Annual Burden Hours: 110.

Estimated Total Annual Cost Burden: $216.

Description: The Mental Health Parity Act of 1996 (Pub. L. 104–194) requires parity between the dollar limits imposed on mental health benefits and those imposed on medical/surgical benefits offered by group health plans and issuers. Upon receipt of notice that a plan claims exemption from these requirements, participants and beneficiaries may request a summary of the information upon which the exemption was based. This request pertains to the calculation and

disclosure of information on which the exemption was based. For additional information, please refer to a related notice published at 72 FR 54072 on September 21, 2007 and the interim final rule published at 62 FR 66931 on December 22, 1997.

Darrin A. King,

Acting Departmental Clearance Officer.

[FR Doc. E7–23461 Filed 12–3–07; 8:45 am]

BILLING CODE 4510–29–P

LIBRARY OF CONGRESS

Copyright Office

[Docket No. 2007–12]

Section 119 and the Changes in the Consumer Price Index

AGENCY: Copyright Office, Library of Congress.

ACTION: Notice of Rate Adjustment.

SUMMARY: The Library of Congress, through the Copyright Office, is announcing an upcoming royalty rate adjustment for satellite carriers based upon changes in the Consumer Price Index.

FOR FURTHER INFORMATION CONTACT: Ben Golant, Assistant General Counsel, and Tanya M. Sandros, General Counsel, Copyright GC/I&R, P.O. Box 70400, Washington, DC 20024. Telephone: (202) 707–8380. Telefax: (202) 707–8366.

SUPPLEMENTARY INFORMATION: Pursuant to Section 119(c) and our implementing rules, we are hereby giving notice to the public that royalty rates will be adjusted for the accounting period commencing January 1, 2008, based on changes in the Consumer Price Index. This action is consistent with voluntary agreements reached between satellite carriers and copyright owners under the Copyright Act.

Section 119 and royalty payments for analog television signals. In 2004, Congress enacted the Satellite Home Viewer Extension and Reauthorization Act (''SHVERA''). SHVERA extended for an additional five years the statutory license for satellite carriers retransmitting over-the-air television broadcast stations to their subscribers and made a number of amendments to the license. One of the amendments to Section 119 sets forth a process for adjusting the royalty fees paid by satellite carriers for retransmitting analog television network and superstations. 17 U.S.C. 119(c)(1). The law directs the Librarian of Congress to publish notice in the Federal Register requesting satellite carriers, distributors and copyright owners to submit to the Copyright Office any voluntary agreements they have negotiated as to the adjustment of the rates for analog stations. The Library published such a notice on December 30, 2004, and, pursuant to the statute, requested that any agreements be submitted no later than January 10, 2005. 69 FR 78482 (December 30, 2004).

The Office received one agreement, submitted jointly by the satellite carriers DirecTV, Inc. and EchoStar Satellite L.L.C., the copyright owners of motion pictures and syndicated television series represented by the Motion Picture Association of America, and the copyright owners of sports programming represented by the Office of the Commissioner of Baseball. Section 119(c)(1)(D)(ii)(II) requires the Library to ''provide public notice of the royalty fees from the voluntary agreement and afford parties an opportunity to state that they object to those fees.'' 17 U.S.C. 119(c)(1)(D)(ii)(II). The Library published a Notice of Proposed Rulemaking on January 26, 2005, to fulfill this requirement. 70 FR 3656 (January 26, 2005). No objections were received. Consequently, the Library adopted the rates in the voluntary agreement as final. 70 FR 17320 (Apr. 6, 2005).

The terms and conditions of the agreement were codified at Section 258.3 of the Copyright Office's rules. Paragraph (g) of this rule specifically states, with regard to private home viewing, that the 2007 rate per subscriber per month for distant superstations and network stations shall be adjusted for the amount of inflation as measured by the change in the Consumer Price Index for all urban consumers from January 2007 to January 2008. For viewing in commercial establishments, the 2007 rate per subscriber per month for viewing distant superstations in commercial establishments shall be adjusted for the amount of inflation as measured by the change in the Consumer Price Index for all urban consumers from January 2007 to January 2008.

Section 119 and royalty payments for digital television signals. Another amendment to Section 119 promulgated by SHVERA set forth a process, for the first time, for adjusting the royalty fees paid by satellite carriers for the retransmission of digital broadcast signals. 17 U.S.C. 119(c)(2). The law set the initial rates as the rates set by the Librarian in 1997 for the retransmission of analog broadcast signals, 37 CFR 258.3(b)(1)-(2), reduced by 22.5 percent. 17 U.S.C. 119(c)(2)(A). These rates are to be adjusted in accordance with the procedures set forth in Section 119(c)(1) as directed by Section 119(c)(2) of the Copyright Act.

On March 8, 2005, the Copyright Office received a letter from EchoStar Satellite, L.L.C., DirecTV, Inc., Program Suppliers, and the Joint Sports Claimants requesting that the Office begin the process of setting the rates for the retransmission of digital broadcast signals by initiating a voluntary negotiation period so that rates for both digital and analog signals would be in place before the July 31, 2005, deadline for satellite carriers to pay royalties for the first accounting period of 2005. The Office granted the request and, pursuant to Section 119(c)(1), published a Notice in the Federal Register initiating a voluntary negotiation period and requesting that any agreements reached during this period be submitted no later than April 25, 2005. *See* 70 FR 15368 (March 25, 2005).

In accordance with the March 25 Notice, the Office received one agreement, submitted jointly by the satellite carriers EchoStar Satellite L.L.C. and DirecTV, Inc., the copyright owners of motion pictures and syndicated television series represented by the Motion Picture Association of America, and the copyright owners of sports programming represented by the Office of the Commissioner of Baseball. The agreement proposed rates for the private home viewing of distant superstations and distant network stations for the 2005-2009 period, as well as the viewing of those signals for commercial establishments.

As required by statute, the Library provided public notice of the royalty fees from the voluntary agreement and afforded parties an opportunity to state that they object to those fees. 17 U.S.C. 119(c)(1)(D)(ii)(II). The Library published a Notice of Proposed Rulemaking on May 17, 2005, to fulfill this requirement. 70 FR 28231 (May 17, 2005). The Office received no objections as a result of the Notice. Consequently, the Library adopted the rates as set forth in the voluntary agreement as final. 70 FR 39178 (Jul. 7, 2006).

The terms and conditions of the agreement were codified at Section 258.4 of the Copyright Office's rules. Paragraph (d) of the rule states the royalty rate for secondary transmission of digital signals of broadcast stations by satellite carriers and the process for readjusting the rates for the accounting period commencing on January 1, 2008. For private home viewing, the 2007 rate per subscriber per month for distant superstations and network stations shall be adjusted for the amount of inflation

as measured by the change in the Consumer Price Index for all Urban Consumers from January 2007 to January 2008. For viewing in commercial establishments, the 2007 rate per subscriber per month for viewing distant superstations in commercial establishments shall be adjusted for the amount of inflation as measured by the change in the Consumer Price Index for all Urban Consumers from January 2007 to January 2008.

Conclusion. The Office shall be adjusting the royalty rates for the secondary transmission of the analog and digital transmissions of network and superstations to reflect changes in the Consumer Price Index for all Urban Consumers from January 2007 to January 2008. Another notice will be published after January 1, 2008, to announce the new CPI adjustments.

Dated: November 29, 2007.

Tanya M. Sandros,

General Counsel

[FR Doc. E7–23520 Filed 12–3–07; 8:45 am]

BILLING CODE 1410–30–S

NATIONAL AERONAUTICS AND SPACE ADMINISTRATION

[Notice (07–084)]

NASA International Space Station Advisory Committee; Meeting

AGENCY: National Aeronautics and Space Administration (NASA).

ACTION: Notice of meeting.

SUMMARY: In accordance with the Federal Advisory Committee Act, Public Law 92–463, as amended, the National Aeronautics and Space Administration announces an open meeting of the NASA International Space Station Advisory Committee.

DATES: December 20, 2007, 11 a.m.–12 p.m. Eastern Standard Time.

ADDRESSES: National Aeronautics and Space Administration Headquarters, 300 E Street, SW., Room 3H46, Washington, DC 20546.

FOR FURTHER INFORMATION CONTACT: Dr. Glen R. Asner, Office of External Relations, (202) 358–0903, National Aeronautics and Space Administration, Washington, DC 20546–0001.

SUPPLEMENTARY INFORMATION: This meeting will be open to the public up to the seating capacity of the room. Five seats will be reserved for members of the press. The agenda for the meeting is as follows:

—To assess the progress of the Expedition Sixteen mission.

—To assess the readiness of the International Space Station to accept visiting vehicles from international partners.

—To assess NASA and Roscosmos plans for accommodating a six-person crew aboard the International Space Station.

Attendees will be requested to sign a register and to comply with NASA security requirements, including the presentation of a valid picture ID, before receiving an access badge. Foreign nationals attending this meeting will be required to provide the following information: full name; gender; date/place of birth; citizenship; visa/green card information (number, type, expiration date); passport information (number, country, expiration date); employer/affiliation information (name of institution, address, country, phone); title/position of attendee. To expedite admittance, attendees should provide identifying information in advance by contacting Glen Asner via e-mail at *glen.asner@nasa.gov* or by telephone at (202) 358–0903 by December 13, 2007.

It is imperative that the meeting be held on this date to accommodate the scheduling priorities of the key participants.

P. Diane Rausch,

Advisory Committee Management Officer, National Aeronautics and Space Administration.

[FR Doc. E7–23409 Filed 12–3–07; 8:45 am]

BILLING CODE 7510–13–P

THE NATIONAL FOUNDATION FOR THE ARTS AND THE HUMANITIES

Notice of Proposed Information Collection: Assessing the Impact of Access to Computers and the Internet and to Related Services at Public Libraries on Individuals, Families, and Communities

AGENCY: Institute of Museum and Library Services, National Foundation for the Arts and Humanities.

ACTION: Notice.

SUMMARY: The Institute of Museum and Library Service (IMLS) as part of its continuing effort to reduce paperwork and respondent burden, conducts a pre-clearance consultation program to provide the general public and federal agencies with an opportunity to comment on proposed and/or continuing collections of information in accordance with the Paperwork Reduction Act of 1995 (PRA95) [44 U.S.C. 3508(2)(A)]. This program helps to ensure that requested data can be provided in the desired format, reporting burden (time and financial resources) is minimized, collection instruments are clearly understood, and the impact of collection requirements on respondents can be properly assessed. Currently the Institute of Museum and Library Services is soliciting comments concerning the proposed study to assess the impact of access to computers and the Internet and to related services at public libraries on individuals, families, and communities.

DATES: Written comments must be submitted to the office listed in the **ADDRESSES** section below on or before February 4, 2008. IMLS is particularly interested in comments that help the agency to:

- Evaluate whether the proposed collection of information is necessary for the proper performance of the functions of the agency, including whether the information will have practical utility;
- Evaluate the accuracy of the agency's estimate of the burden of the proposed collection of information, including the validity of the methodology and assumptions used;
- Enhance the quality, utility, and clarity of the information to be collected; and
- Minimize the burden of the collection of information on those who are to respond, including through the use of appropriate automated electronic, mechanical, or other technological collection techniques or other forms of information technology, *e.g.* permitting electronic submissions of responses.

ADDRESSES: Send comments to: Mary Downs, Ph.D., Research Officer, Office of Policy, Planning, Research, and Communications, Institute of Museum and Library Services, 1800 M Street, NW., 9th floor, Washington, DC 20036, by telephone: 202–653–4682; fax: 202–653–4625; or by e-mail at mdowns@imls.gov.

SUPPLEMENTARY INFORMATION:

1. Background

The Institute of Museum and Library Services is authorized by the Museum and Library Services Act, Public Law 108–81, and is the primary source of federal support for the nation's 122,000 libraries and 17,500 museums. The Institute's mission is to create strong libraries and museums that connect people to information and ideas. The Institute works at the national level and in coordination with state and local organizations to sustain heritage, culture, and knowledge; enhance learning and innovation; and support professional development.

II. Current Actions

The purpose of the study is to undertake original research and analysis to identify measurable indicators of the social, economic, personal, and professional value of free access to computers, the Internet, and related services at public libraries, and of negative impact where service is weak or absent, and to provide new, reliable data on the benefits to individuals, families, and communities of these services and resources at public libraries. The study will be framed by these questions:

(1) What are the demographics of people who use computers, the Internet, and related services in public libraries?

(2) What information and resources provided by free access to computers, the Internet, and related services in public libraries are people using, across the spectrum of on-site and off-site use?

(3) How do individuals, families, and communities benefit (with a focus on social, economic, personal, and professional well-being) from free access to computers, the Internet, and related services at public libraries?

(4) What reliable indicators can measure the social, economic, personal, and/or professional well-being of individuals, families, and communities that result from access to computers, the Internet, and related services at public libraries?

(5) What correlations can be made between the benefits obtained through access to computers and the Internet and a range of demographic variables? What correlations can be made to type, level, or volume of related services?

(6) What computer and Internet services and resources are lacking at public libraries that, if provided, could bring about greater benefit?

(7) What indicators of negative impact can be identified where free access to computers and the Internet is weak or absent?

Once completed, the results of the study will be issued as a report that will be made widely available to inform and benefit libraries, the library research field, and the public at large.

Agency: Institute of Museum and Library Services.

Title: Assessing the Impact of Access to Computers and the Internet and to Related Services at Public Libraries on Individuals, Families, and Communities.

OMB Number: To be determined.

Agency Number: 3137.

Frequency: One time.

Affected Public: General public, libraries, State Library Administrative agencies, State and local governments.

Number of Respondents: To be determined.

Estimated Time per Respondent: To be determined.

Total Annualized Capital/Startup Costs: To be determined.

Total Costs: To be determined.

FOR FURTHER INFORMATION CONTACT: Mary Downs, Ph.D., Research Officer, Office of Policy, Planning, Research, and Communications, Institute of Museum and Library Services, 1800 M Street, NW., 9th Floor, Washington, DC, by telephone: 202–653–4630; fax: 202–653–4600; or e-mail: mdowns@imls.gov.

Dated: November 26, 2007.

Barbara G. Smith,

E-Projects Officer, Institute of Museum & Library Services.

[FR Doc. E7–23424 Filed 12–3–07; 8:45 am]

BILLING CODE 7036–01–P

NUCLEAR REGULATORY COMMISSION

[Docket No. 55–61336; License No. SOP–11801; IA–07–14]

In the Matter of Keith Davis; Confirmatory Order (Effective Immediately)

I

Keith Davis (Mr. Davis) was previously employed as a licensed Senior Reactor Operator at the Susquehanna Steam Electric Station (SSES). Mr. Davis was the holder of Senior Reactor Operator (SRO) License Number SOP–11801 issued by the Nuclear Regulatory Commission (NRC) pursuant to 10 CFR part 55. The license authorized Mr. Davis to direct the licensed activities of licensed operators at, and to manipulate all controls of, the Susquehanna Steam Electric Station, (facility license numbers NPF–14 and NPF–15). The facility is located on a PPL-Susquehanna, LLC site in Berwick, PA.

II

An investigation was initiated by the NRC Office of Investigations (OI) on August 4, 2006, at the Susquehanna Steam Electric Station. This investigation was initiated, in part, to determine if Mr. Davis deliberately failed to report an arrest as required by station procedures on June 27, 2006, on his first day back to work after the arrest for driving under the influence (DUI) of alcohol on June 19, 2006. As noted in an NRC letter to Mr. Davis on July 2, 2007, OI substantiated, based on the evidence developed during its investigation, that Mr. Davis deliberately failed to report the arrest as required by station procedure. The letter offered Mr. Davis the opportunity to either attend a Predecisional Enforcement Conference or to request use of Alternate Dispute Resolution (ADR), to resolve this matter.

III

In response to the July 2, 2007 letter, Mr. Davis requested the use of ADR to resolve this matter with the NRC. ADR is a process in which a neutral mediator with no decision-making authority assists the NRC and Mr. Davis in reaching an agreement on resolving any differences regarding the enforcement action. An ADR session was held between Mr. Davis and the NRC in King of Prussia, Pennsylvania on September 27, 2007, and was mediated by a professional mediator, arranged through Cornell University's Institute of Conflict Management. During that ADR session, a settlement agreement was reached. The elements of the settlement agreement consisted of the following:

1. The NRC and Mr. Davis agreed with the following facts: (1) Mr. Davis, while employed as a senior reactor operator at the PPL-Susquehanna nuclear facility, was arrested on June 19, 2006, for driving under the influence of alcohol; (2) Mr. Davis did not report the arrest to the Pennsylvania Power Light (PPL)—Susquehanna management on June 27, 2006, upon arrival for scheduled work, his first opportunity after the arrest; and, (3) at the time of the arrest, Mr. Davis understood that he was required to follow all station procedures under the terms and conditions of his individual senior reactor operator license (SOP–11801).

2. As a result of the facts agreed to in Item 1, the NRC and Mr. Davis agreed that Mr. Davis violated NRC requirements, in that on June 27, 2006, contrary to 10 CFR 55.53, as required by 10 CFR 50.34(c) and PPL-Susquehanna procedure, NDAP–00–2002, Rev 4, ''Fitness for Duty/Behavior Observation Program,'' Mr. Davis willfully failed to report to PPL-Susquehanna that he had been arrested for driving under the influence of alcohol on June 19, 2006.

3. Mr. Davis, subsequent to the NRC's identification of this violation, took actions to assure that he learned from the violation and provided the NRC with assurance that it would not recur. These actions included attending substance abuse counseling and entering into Accelerated Rehabilitation Disposition Program with the Commonwealth of Pennsylvania, which included participating in education awareness and community service.

4. During the ADR mediation session, Mr. Davis recognized an opportunity for other licensed operators in the nuclear industry to learn from his violation. Therefore, Mr. Davis agreed to take the following actions in the future to sensitize other licensed operators to the importance of remaining fit for duty, and reporting any arrest to the facility licensee as part of the behavior observation program: (a) Writing an Operating Experience report that will address lessons learned from this violation which will include a discussion of meeting the intent of procedures as part of procedure adherence; (b) providing the written report to the NRC for review; (c) submitting the report to a minimum of 3 national organizations for possible publication, including INPO, NEI, and a third organization that Mr. Davis will identify, and inform the NRC of such when submitting the report for review; (d) providing a written response to the NRC explaining the reasons why the NRC can have confidence in Mr. Davis following licensee procedures and meeting NRC regulations should he work in the nuclear industry in the future; and, (e) preparing a training plan for licensed and non-licensed operator training at PPL-Susquehanna regarding procedure compliance as it relates to meeting the intent of the procedure, and the lessons-learned from the circumstances which resulted in this ADR. The subject training plan will be provided to PPL for their potential use.

5. Mr. Davis will inform the NRC before he resumes work involving NRC licensed activities.

6. Mr. Davis agreed to complete the additional actions described in Item 4 within three months after issuance of an NRC Confirmatory Order confirming the commitments agreed to herein, and will send a letter to the NRC informing the NRC that these actions are complete. Mr. Davis agreed to send this letter to the NRC within 30 days of completion of all actions.

7. In light of the actions Mr. Davis has taken as described in Item 3, and those actions Mr. Davis has committed to take as described in Items 4, 5, and 6, the NRC agrees to issue a Severity Level III Notice of Violation to Mr. Davis. The NRC will issue a letter with the aforementioned Notice of Violation and a Confirmatory Order to Mr. Davis confirming the commitments set forth herein. The letter, Notice of Violation, and the Confirmatory Order will be publically available in ADAMS, will appear on the NRC ''Significant Enforcement Actions—Individuals'' Web site for a period of 1 year, and will also be placed in Mr. Davis' individual license file (Docket No. 55–61336, License No. SOP–11801).

8. Mr. Davis agreed to issuance of the letter, Notice of Violation, and Confirmatory Order confirming this agreement, and also agrees to waive any request for a hearing regarding this Confirmatory Order.

IV

Since Mr. Davis has agreed to take additional actions to address NRC concerns, as set forth in Section III, the NRC has concluded that its concerns can be resolved through the NRC's confirmation of the commitments as outlined in this Confirmatory Order. I find that Mr. Davis' commitments as set forth in Section III above are acceptable. In view of the foregoing, I have determined that these commitments be confirmed by this Confirmatory Order. Based on the above and Mr. Davis' consent, this Confirmatory Order is immediately effective upon issuance.

V

Accordingly, pursuant to Sections 103, 161b, 161i, 161o, 182, and 186 of the Atomic Energy Act of 1954, as amended, and the Commission's regulations in 10 CFR 2.202 and 10 CFR Part 55, *it is hereby ordered, effective immediately that:*

1. Within three months of the date of this Order, Mr. Davis will take the following actions to sensitize other licensed operators to the importance of remaining fit for duty, and reporting any arrest to the facility licensee as part of the behavior observation program: (a) Writing an Operating Experience report that will address lessons learned from this violation which will include a discussion of meeting the intent of procedures as part of procedure adherence; (b) providing the written report to the NRC for review; (c) submitting the report to a minimum of 3 national organizations for possible publication, including INPO, NEI, and a third organization that Mr. Davis will identify and inform the NRC of such when submitting the report for review; (d) providing a written response to the NRC explaining the reasons why the NRC can have confidence in Mr. Davis following licensee procedures and meeting NRC regulations should he work in the nuclear industry in the future; and, (e) preparing a training plan for licensed and non-licensed operator training at PPL-Susquehanna regarding procedure compliance as it relates to meeting the intent of the procedure, and the lessons-learned from the circumstances which resulted in this ADR. The subject training plan will be provided to PPL for their potential use.

2. Mr. Davis will inform the NRC before he resumes work involving NRC licensed activities.

3. Mr. Davis will provide the NRC with a letter detailing his completion of all actions specified in Item 1 above within 30 days of completion of all actions.

The NRC Region I Regional Administrator may relax or rescind, in writing, any of the above conditions upon a showing by Mr. Davis of good cause.

VI

Any person adversely affected by this Confirmatory Order, other than Mr. Davis, may request a hearing within 20 days of its issuance. Where good cause is shown, consideration will be given to extending the time to answer or request a hearing. A request for extension of time must be directed to the Director, Office of Enforcement, U.S. Nuclear Regulatory Commission, and include a statement of good cause for the extension.

A request for a hearing must be filed in accordance with the NRC E-Filing rule, which the NRC promulgated in August, 2007, 72 FR 49,139 (Aug. 28, 2007). The E-Filing process requires participants to submit and serve documents over the internet or, in some cases, to mail copies on electronic optical storage media. Participants may not submit paper copies of their filings unless they seek a waiver in accordance with the procedures described below.

To comply with the procedural requirements associated with E-Filing, at least five (5) days prior to the filing deadline the requestor must contact the Office of the Secretary by e-mail at *HEARINGDOCKET@NRC.GOV,* or by calling (301) 415–1677, to request (1) a digital ID certificate, which allows the participant (or its counsel or representative) to digitally sign documents and access the E-Submittal server for any NRC proceeding in which it is participating; and/or (2) creation of an electronic docket for the proceeding (even in instances when the requestor (or its counsel or representative) already holds an NRC-issued digital ID certificate). Each requestor will need to download the Workplace Forms Viewer™ to access the Electronic Information Exchange (EIE), a component of the E-Filing system. The Workplace Forms Viewer™ is free and is available at *http://www.nrc.gov/site-help/e-submittals/install-viewer.html.* Information about applying for a digital ID certificate also is available on NRC's public Web site at *http://www.nrc.gov/site-help/e-submittals/apply-certificates.html.*

Once a requestor has obtained a digital ID certificate, had a docket created, and downloaded the EIE viewer, it can then submit a request for a hearing through EIE. Submissions should be in Portable Document Format (PDF) in accordance with NRC guidance available on the NRC public Web site at *http://www.nrc.gov/site-help/e-submittals.html*. A filing is considered complete at the time the filer submits its document through EIE. To be timely, electronic filings must be submitted to the EIE system no later than 11:59 p.m. Eastern Time on the due date. Upon receipt of a transmission, the E-Filing system time-stamps the document and sends the submitter an e-mail notice confirming receipt of the document. The EIE system also distributes an e-mail notice that provides access to the document to the NRC Office of the General Counsel and any others who have advised the Office of the Secretary that they wish to participate in the proceeding, so that the filer need not serve the document on those participants separately. Therefore, any others who wish to participate in the proceeding (or their counsel or representative) must apply for and receive a digital ID certificate before a hearing request is filed so that they may obtain access to the document via the E-Filing system.

A person filing electronically may seek assistance through the ''Contact Us'' link located on the NRC Web site at *http://www.nrc.gov/site-help/e-submittals.html* or by calling the NRC technical help line, which is available between 8:30 a.m. and 4:15 p.m., Eastern Time, Monday through Friday. The help line number is (800) 397–4209 or locally, (301) 415–4737.

Participants who believe that they have good cause for not submitting documents electronically must file a motion, in accordance with 10 CFR 2.302(g), with their initial paper filing requesting authorization to continue to submit documents in paper format. Such filings must be submitted by (1) first class mail addressed to the Office of the Secretary of the Commission, U.S. Nuclear Regulatory Commission, Washington, DC 20555–0001, Attention: Rulemaking and Adjudications Staff; or (2) courier, express mail, or expedited delivery service to the Office of the Secretary, Sixteenth Floor, One White Flint North, 11555 Rockville Pike, Rockville, Maryland 20852, Attention: Rulemaking and Adjudications Staff. Participants filing a document in this manner are responsible for serving the document on all other participants. Filing is considered complete by first-class mail as of the time of deposit in the mail, or by courier, express mail, or expedited delivery service upon depositing the document with the provider of the service.

Documents submitted in adjudicatory proceedings will appear in NRC's electronic hearing docket which is available to the public at *http://ehd.nrc.gov/EHD_Proceeding/home.asp*, unless excluded pursuant to an order of the Commission, an Atomic Safety and Licensing Board, or a Presiding Officer. Participants are requested not to include personal privacy information, such as social security numbers, home addresses, or home phone numbers in their filings. With respect to copyrighted works, except for limited excerpts that serve the purpose of the adjudicatory filings and would constitute a Fair Use application, participants are requested not to include copyrighted materials in their works.

If a person requests a hearing, that person shall set forth with particularity the manner in which his interest is adversely affected by this Order and shall address the criteria set forth in 10 CFR 2.309(d).

If a hearing is requested by a person whose interest is adversely affected, the Commission will issue an Order designating the time and place of any hearing. If a hearing is held, the issue to be considered at such hearing shall be whether this Confirmatory Order shall be sustained. *An answer or a request for a hearing shall not stay the effectiveness date of this order.*

For the Nuclear Regulatory Commission.

Dated this 26th day of November 2007.

Marc L. Dapas,

Deputy Regional Administrator.

[FR Doc. E7–23478 Filed 12–3–07; 8:45 am]

BILLING CODE 7590–01–P

NUCLEAR REGULATORY COMMISSION

[Docket No. 052–00008]

Notice of Issuance of Early Site Permit for Dominion Nuclear North Anna, LLC Located 40 Miles North-Northwest of the City of Richmond, VA

AGENCY: U.S. Nuclear Regulatory Commission.

ACTION: Notice of Issuance of Early Site Permit.

FOR FURTHER INFORMATION CONTACT: Thomas Kevern, Senior Project Manager, ESBWR/ABWR Projects Branch 1, Division of New Reactor Licensing, Office of New Reactors, U.S. Nuclear Regulatory Commission, Washington, DC 20555–0001.

Telephone: (301) 415–0224; fax: (301) 415–5199; e-mail: *tak@nrc.gov.*

SUPPLEMENTARY INFORMATION:

I. Introduction

Pursuant to Title 10, Section 2.106, ''Notice of Issuance,'' of the *Code of Federal Regulations* (10 CFR 2.106), the U.S. Nuclear Regulatory Commission (NRC) is providing notice of the issuance of early site permit (ESP) ESP–003 to Dominion Nuclear North Anna, LLC (Dominion or the permit holder), for approval of a site located near Lake Anna in Louisa County, Virginia (VA), approximately 40 miles north-northwest of Richmond, VA, for one or more nuclear power reactors; this action is separate from the filing of an application for a construction permit or combined license for such a facility. The NRC has found that the application for an ESP filed by Dominion complies with the applicable requirements of the Atomic Energy Act of 1954, as amended, and the applicable rules and regulations of the Commission, and all required notifications to other agencies or bodies have been duly made. Taking into consideration the site criteria contained in 10 CFR Part 100, ''Reactor Site Criteria,'' a reactor, or reactors, having design characteristics that fall within the site characteristics and controlling parameters of the permit holder's ESP site can be constructed and operated without undue risk to the health and safety of the public.

There is reasonable assurance that the permit holder will comply with the regulations in 10 CFR Chapter I, and the health and safety of the public will not be endangered. Issuance of an ESP to the permit holder will not be inimical to the common defense and security or the health and safety of the public.

There is no significant impediment to the development of emergency plans, as referenced in 10 CFR 52.17(b)(1) and 10 CFR 52.18, ''Standards for Review of Applications.'' The descriptions of contacts and arrangements made with Federal, State, and local governmental agencies with emergency planning responsibilities, as referenced in 10 CFR 52.17(b)(3), are acceptable. Major features A, B, C, D, E, F, G, I, J, K, L, O, and P of the emergency plan are acceptable to the extent specified in NUREG–1835, ''Safety Evaluation Report for an Early Site Permit (ESP) at the North Anna ESP Site,'' issued September 2005 and ''Safety Evaluation Report for an Early Site Permit (ESP) at the North Anna ESP Site, Supplement 1'' issued November 2006. The issuance of this ESP is in accordance with the National Environmental Policy Act, as amended, and with applicable sections

of 10 CFR Part 51, ''Environmental Protection Regulations for Domestic Licensing and Related Regulatory Functions,'' as referenced by Subpart A, ''Early Site Permits,'' of 10 CFR Part 52, ''Licenses, Certifications, and Approvals for Nuclear Power Plants,'' and all applicable requirements therein have been satisfied. The permit holder's request for the proposed permit was previously noticed in the **Federal Register** on December 2, 2003 (68 FR 67489), with a notice of hearing and opportunity to petition for leave to intervene.

This ESP complies with the standards and requirements of the Atomic Energy Act of 1954, as amended, and the NRC's rules and regulations as set forth in 10 CFR Chapter I and the National Environmental Policy Act of 1969. Accordingly, the NRC issued this ESP on November 27, 2007, and it was effective immediately.

II. Further Information

The NRC has prepared a Safety Evaluation Report (SER) and a Final Environmental Impact Statement (FEIS) that document the information that the staff reviewed and NRC's conclusion. In accordance with 10 CFR 2.390, ''Public Inspections, Exemptions, Requests for Withholding,'' details with respect to this action, including the SER and accompanying documentation included in the ESP package, are available electronically via the NRC's Electronic Reading Room at *http://www.nrc.gov/reading-rm/adams.html.* From this site, users can access the NRC's Agencywide Documents Access and Management System (ADAMS), which provides text and image files of the NRC's public documents. The following ADAMS accession numbers apply to the documents related to this notice:

ML052710305 NUREG–1835, ''Safety Evaluation Report for an Early Site Permit (ESP) at the North Anna ESP Site,'' September 2005

ML063170371 NUREG–1835, ''Safety Evaluation Report for an Early Site Permit (ESP) at the North Anna ESP Site (NUREG–1835 Supplement 1),'' November 2006

ML063480261 NUREG–1811, Vol. 1, ''Environmental Impact Statement for an Early Site Permit (ESP) at the North Anna ESP Site, Final Report, Main Report,'' December 31, 2006

ML063480263 NUREG–1811, Vol. 2, ''Environmental Impact Statement for an Early Site Permit (ESP) at the North Anna ESP Site, Final Report, Appendices E & F,'' December 31, 2006

ML042010009 North Anna Early Site Permit Application Package, September 25, 2003

ML073180440 North Anna Early Site Permit

Persons who do not have access to ADAMS or who encounter problems in accessing the documents located in ADAMS should contact the NRC Public Document Room (PDR) Reference staff at 1–800–397–4209 or 301–415–4737, or by e-mail to *pdr@nrc.gov.*

These documents may also be viewed electronically on the public computers located at the NRC's PDR, One White Flint North, Room O1 F21, 11555 Rockville Pike, Rockville, MD 20852. The PDR reproduction contractor will copy documents for a fee.

Dated at Rockville, Maryland, this 27th day of November 2007.

For the Nuclear Regulatory Commission.

Mohammed Shuaibi,

Chief, ESBWR/ABWR Projects Branch 1, Division of New Reactor Licensing, Office of New Reactors.

[FR Doc. E7–23468 Filed 12–3–07; 8:45 am]

BILLING CODE 7590–01–P

NUCLEAR REGULATORY COMMISSION

[Docket No. 040–06377]

Notice of Availability of Environmental Assessment and Finding of No Significant Impact for License Amendment to Source Materials License No. Sub-348, for Unrestricted Release of the Department of the Army, U.S. Army Research, Development and Engineering Command, Armament Research, Development and Engineering Center, Building 611b Facility in Picatinny, NJ

AGENCY: Nuclear Regulatory Commission.

ACTION: Issuance of Environmental Assessment and Finding of No Significant Impact for License Amendment.

FOR FURTHER INFORMATION CONTACT: Betsy Ullrich, Senior Health Physicist, Commercial and R&D Branch, Division of Nuclear Materials Safety, Region I, 475 Allendale Road, King of Prussia, Pennsylvania; telephone (610) 337–5040; fax number (610) 337–5269; or by e-mail: *exu@nrc.gov.*

SUPPLEMENTARY INFORMATION:

I. Introduction

The U.S. Nuclear Regulatory Commission (NRC) is considering the issuance of a license amendment to Source Materials License No. SUB–348. This license is held by the Department of the Army, U. S. Army Research, Development and Engineering Center (RDEC), Armament Research, Development and Engineering Center (ARDEC) (the Licensee), for its activities at the Picatinny Arsenal located in Picatinny, New Jersey. Issuance of the amendment would authorize release of Building 611B for unrestricted use. The Licensee requested this action in a letter dated May 14, 2007. The NRC has prepared an Environmental Assessment (EA) in support of this proposed action in accordance with the requirements of Title 10, Code of Federal Regulations (CFR), Part 51 (10 CFR Part 51). Based on the EA, the NRC has concluded that a Finding of No Significant Impact (FONSI) is appropriate with respect to the proposed action. The amendment will be issued to the Licensee following the publication of this FONSI and EA in the **Federal Register**.

II. Environmental Assessment

Identification of Proposed Action

The proposed action would approve the Licensee's May 14, 2007 license amendment request, resulting in release of Building 611B for unrestricted use. License No. SUB–348 was issued on July 13, 1961, pursuant to 10 CFR Part 40, and has been amended periodically since that time. This license authorized the Licensee to use uranium and thorium in any form for purposes of conducting research and development activities.

The Picatinny Arsenal is situated on 6,500 acres of land and consists of office space, laboratories, and specialized facilities. The Picatinny Arsenal is located in a mixed residential and commercial area. Building 611B was one of several buildings where use of licensed material was performed under the authority of RDEC/ARDEC, one of the military tenants at Picatinny Arsenal. Building 611B is a single-story concrete structure of about 1,100 square feet, containing two test-firing ranges. One of the firing ranges was used for the testing of depleted uranium munitions. Building 611B is located in a cleared area on a rocky and wooded hillside, within a fenced area of approximately 40,000 square feet. Other structures within the fenced area include an Outdoor Storage Area and two movable electrical storage shelters.

On November 19, 1998, the Licensee notified the NRC that they had ceased licensed activities and initiated a survey and decontamination of Building 611B. Based on the Licensee's historical knowledge of the site and the conditions of the Building 611B, the Licensee

determined that only routine decontamination activities, in accordance with their NRC-approved, operating radiation safety procedures, were required. The Licensee submitted a decommissioning plan for Building 611B. The NRC's approval of the Licensee's decommissioning plan was published in the **Federal Register** on Friday, March 31, 2000 (65 FR 17322). The Licensee conducted surveys of the Building 611B and provided information to the NRC to demonstrate that it meets the criteria in Subpart E of 10 CFR Part 20 for unrestricted release.

Need for the Proposed Action

The Licensee has ceased conducting licensed activities at the Building 611B and seeks the unrestricted use of this facility.

Environmental Impacts of the Proposed Action

The historical review of licensed activities conducted at the Building 611B shows that such activities involved use of depleted uranium, a radionuclide with a half-life greater than 120 days. Prior to performing the final status survey, the Licensee conducted decontamination activities, as necessary, in the areas of the Building 611B affected by this radionuclide.

The Licensee conducted a final status survey during August and September, 2003. This survey covered areas inside Building 611B including the DU Tunnel, the Non-DU Tunnel, the Foyer, the Instrument Room, and the Indoor Storage Area; exterior surfaces of building 611B; an Outdoor Storage Area; two movable electrical storage containers; and the open land area and bunker within the fence line for the Building 611B area. The final status survey report was attached to the Licensee's amendment request dated May 14, 2007. The Licensee elected to demonstrate compliance with the radiological criteria for unrestricted release as specified in 10 CFR 20.1402 by developing derived concentration guideline levels (DCGLs) for its Building 611B. The Licensee conducted site-specific dose modeling using input parameters specific to the Building 611B. For soil, the Licensee used the RESRAD code, version 5.82, with all default values except for a smaller thickness of contaminated soil (0.25 meters instead of 2 meters) and a smaller contaminated area (4000 square-meters instead of 10,000 square-meters), and did not use the pathways for milk or meat ingestion because of the small area. The soil DCGL was determined to be 186 picocuries per gram of soil. For contaminated building surfaces, the Licensee used the RESRAD-Build code, version 3.0 with all default values except for the removable fractions (10 percent instead of 50 percent), the fraction indoors (0.33 instead of 0.5) and the exposure duration (250 days instead of 365 days). The building surface DCGL was determined to be 5,550 disintegrations per minute (dpm) per 100 square-centimeters area. The NRC previously reviewed the Licensee's methodology and proposed DCGLs, and concluded that the proposed DCGLs are acceptable for use as release criteria at the Building 611B. The Licensee's final status survey results were below these DCGLs, and are thus acceptable.

Based on its review, the staff has determined that the affected environment and any environmental impacts associated with the proposed action are bounded by the impacts evaluated by the ''Generic Environmental Impact Statement in Support of Rulemaking on Radiological Criteria for License Termination of NRC-Licensed Nuclear Facilities'' (NUREG–1496) Volumes 1–3 (ML042310492, ML042320379, and ML042330385). The staff finds there were no significant environmental impacts from the use of radioactive material at Building 611B. The NRC staff reviewed the docket file records and the final status survey report to identify any non-radiological hazards that may have impacted the environment surrounding the Building 611B. No such hazards or impacts to the environment were identified, except the presence of unexploded ordnance identified by the Licensee. Department of the Army personnel surveyed the area for unexploded ordnance prior to, and during, all activities performed in the outdoor area surrounding Building 611B, and removed any unexploded ordnance found. The NRC has identified no other radiological or non-radiological activities in the area that could result in cumulative environmental impacts.

The NRC staff finds that the proposed release of the Building 611B for unrestricted use is in compliance with 10 CFR 20.1402. Although the Licensee will continue to perform licensed activities at other parts of the Picatinny Arsenal, the Licensee must ensure that this decommissioned area does not become recontaminated. Before the license can be terminated, the Licensee will be required to show that the entire Picatinny Arsenal, including previously-released areas, complies with the radiological criteria in 10 CFR 20.1402. Based on its review, the staff considered the impact of the residual radioactivity at the Building 611B and concluded that the proposed action will not have a significant effect on the quality of the human environment.

Environmental Impacts of the Alternatives to the Proposed Action

Due to the largely administrative nature of the proposed action, its environmental impacts are small. Therefore, the only alternative the staff considered is the no-action alternative, under which the staff would leave things as they are by simply denying the amendment request. This no-action alternative is not feasible because it conflicts with 10 CFR 40.42(d), requiring that decommissioning of source material facilities be completed and approved by the NRC after licensed activities cease. The NRC's analysis of the Licensee's final status survey data confirmed that the Building 611B meets the requirements of 10 CFR 20.1402 for unrestricted release. Additionally, denying the amendment request would result in no change in current environmental impacts. The environmental impacts of the proposed action and the no-action alternative are therefore similar, and the no-action alternative is accordingly not further considered.

Conclusion

The NRC staff has concluded that the proposed action is consistent with the NRC's unrestricted release criteria specified in 10 CFR 20.1402. Because the proposed action will not significantly impact the quality of the human environment, the NRC staff concludes that the proposed action is the preferred alternative.

Agencies and Persons Consulted

NRC provided a draft of this Environmental Assessment to the State of New Jersey Department of Environmental Protection (NJDEP) for review on October 2, 2007. On November 8, 2007, NJDEP responded by letter. The State agreed with the conclusions of the EA, and otherwise had no comments.

The NRC staff has determined that the proposed action is of a procedural nature, and will not affect listed species or critical habitat. Therefore, no further consultation is required under Section 7 of the Endangered Species Act. The NRC staff has also determined that the proposed action is not the type of activity that has the potential to cause effects on historic properties. Therefore, no further consultation is required under Section 106 of the National Historic Preservation Act.

III. Finding of No Significant Impact

The NRC staff has prepared this EA in support of the proposed action. On the basis of this EA, the NRC finds that there are no significant environmental impacts from the proposed action, and that preparation of an environmental impact statement is not warranted. Accordingly, the NRC has determined that a Finding of No Significant Impact is appropriate.

IV. Further Information

Documents related to this action, including the application for license amendment and supporting documentation, are available electronically at the NRC's Electronic Reading Room at *http://www.nrc.gov/reading-rm/adams.html.* From this site, you can access the NRC's Agencywide Document Access and Management System (ADAMS), which provides text and image files of NRC's public documents. The documents related to this action are listed below, along with their ADAMS accession numbers.

1. Letter dated November 29, 1999, with the ''Picatinny Arsenal Decommissioning Plan for Building 611B'' [ML003683836];
2. Letter dated November 24, 2000 [ML003772619] with Amendment No. 23 [ML003773181];
3. Letter dated May 9, 2002 with the ''Final Survey Plan for the TACOM–ARDEC Picatinny Arsenal Building 611B, Revision 1, January 2002'' [ML021400335];
4. Letter dated October 16, 2002 with Amendment No. 26 [ML022970431];
5. Inspection 040–06377/2003–001, September 4, 18 and 22, 2003 [ML032930404];
6. Letter dated May 14, 2007 with the ''Final Survey Report for the TACOM–ARDEC Picatinny Arsenal Building 611B'' [ML071620348];
7. NUREG–1757, ''Consolidated NMSS Decommissioning Guidance;''
8. Title 10 Code of Federal Regulations, Part 20, Subpart E, ''Radiological Criteria for License Termination;''
9. Title 10, Code of Federal Regulations, Part 51, ''Environmental Protection Regulations for Domestic Licensing and Related Regulatory Functions;'' and
10. NUREG–1496, ''Generic Environmental Impact Statement in Support of Rulemaking on Radiological Criteria for License Termination of NRC-Licensed Nuclear Facilities.''

If you do not have access to ADAMS, or if there are problems in accessing the documents located in ADAMS, contact the NRC Public Document Room (PDR) Reference staff at 1–800–397–4209, 301–415–4737, or by e-mail to *pdr@nrc.gov.* These documents may also be viewed electronically on the public computers located at the NRC's PDR, O 1 F21, One White Flint North, 11555 Rockville Pike, Rockville, MD 20852. The PDR reproduction contractor will copy documents for a fee.

Dated at King of Prussia, Pennsylvania this 27th day of November 2007.

For the Nuclear Regulatory Commission.

James Dwyer,

Chief, Commercial and R&D Branch, Division of Nuclear Materials Safety, Region I.

[FR Doc. E7–23475 Filed 12–3–07; 8:45 am]

BILLING CODE 7590–01–P

NUCLEAR REGULATORY COMMISSION

Advisory Committee on Nuclear Waste and Materials; Meeting on Planning and Procedures; Notice of Meeting

The Advisory Committee on Nuclear Waste and Materials (ACNW&M) will hold a Planning and Procedures meeting on December 17, 2007, Room T–2B3, 11545 Rockville Pike, Rockville, Maryland. The entire meeting will be open to public attendance, with the exception of a portion that may be closed pursuant to 5 U.S.C. 552b(c)(2) and (6) to discuss organizational and personnel matters that relate solely to internal personnel rules and practices of ACNW&M, and information the release of which would constitute a clearly unwarranted invasion of personal privacy.

The agenda for the subject meeting shall be as follows:

Monday, December 17, 2007—11 a.m.–12 p.m.

The Committee will discuss proposed ACNW&M activities and related matters. The purpose of this meeting is to gather information, analyze relevant issues and facts, and formulate proposed positions and actions, as appropriate, for deliberation by the full Committee.

Members of the public desiring to provide oral statements and/or written comments should notify the Designated Federal Officer, Dr. Antonio F. Dias (Telephone: 301/415–6805) between 8:15 a.m. and 5 p.m. (ET) 5 days prior to the meeting, if possible, so that appropriate arrangements can be made. Electronic recordings will be permitted only during those portions of the meeting that are open to the public. Detailed procedures for the conduct of and participation in ACNW&M meetings were published in the **Federal Register** on September 26, 2007 (72 FR 54693).

Further information regarding this meeting can be obtained by contacting the Designated Federal Officer between 8:15 a.m. and 5 p.m. (ET). Persons planning to attend this meeting are urged to contact the above-named individual at least 2 working days prior to the meeting to be advised of any potential changes in the agenda.

Dated: November 27, 2007.

Antonio F. Dias,

Chief, Nuclear Waste & Materials Branch.

[FR Doc. E7–23466 Filed 12–3–07; 8:45 am]

BILLING CODE 7590–01–P

NUCLEAR REGULATORY COMMISSION

Sunshine Federal Register Notice

AGENCY HOLDING THE MEETINGS: Nuclear Regulatory Commission.

DATES: Weeks of December 3, 10, 17, 24, 31, 2007; January 7, 2008.

PLACE: Commissioners' Conference Room, 11555 Rockville Pike, Rockville, Maryland.

STATUS: Public and Closed.

MATTERS TO BE CONSIDERED:

Week of December 3, 2007—Tentative

Friday, December 7, 2007

10 a.m.
Discussion of Intragovernmental Issues (Closed—Ex. 1 & 9).
2 p.m.
Briefing on Threat Environment Assessment (Closed—Ex. 1).

Week of December 10, 2007—Tentative

Wednesday, December 12, 2007

9:30 a.m.
Discussion of Management Issues (Closed—Ex. 2).

Week of December 17, 2007—Tentative

There are no meetings scheduled for the Week of December 17, 2007.

Week of December 24, 2007—Tentative

There are no meetings scheduled for the Week of December 24, 2007.

Week of December 31, 2007—Tentative

There are no meetings scheduled for the Week of December 31, 2007.

Week of January 7, 2008—Tentative

There are no meetings scheduled for the Week of January 7, 2007.

* The schedule for Commission meetings is subject to change on short notice. To verify the status of meetings, call (recording)—(301) 415–1292. Contact person for more information: Michelle Schroll, (301) 415–1662.

The NRC Commission Meeting Schedule can be found on the Internet at: *http://www.nrc.gov/about-nrc/policy-making/schedule.html.*

The NRC provides reasonable accommodation to individuals with disabilities where appropriate. If you

need a reasonable accommodation to participate in these public meetings, or need this meeting notice or the transcript or other information from the public meetings in another format (e.g., braille, large print), please notify the NRC's Disability Program Coordinator, Rohn Brown, at 301–492–2279, TDD: 301–415–2100, or by e-mail at *REB3@nrc.gov.* Determinations on requests for reasonable accommodation will be made on a case-by-case basis.

This notice is distributed by mail to several hundred subscribers; if you no longer wish to receive it, or would like to be added to the distribution, please contact the Office of the Secretary, Washington, DC 20555 (301–415–1969). In addition, distribution of this meeting notice over the Internet system is available. If you are interested in receiving this Commission meeting schedule electronically, please send an electronic message to *dkw@nrc.gov.*

Dated: November 29, 2007.

R. Michelle Schroll,

Office of the Secretary.

[FR Doc. 07–5936 Filed 11–30–07; 10:19 am]

BILLING CODE 7590–01–P

NUCLEAR REGULATORY COMMISSION

Biweekly Notice; Applications and Amendments to Facility Operating Licenses Involving No Significant Hazards Considerations

I. Background

Pursuant to section 189a. (2) of the Atomic Energy Act of 1954, as amended (the Act), the U.S. Nuclear Regulatory Commission (the Commission or NRC staff) is publishing this regular biweekly notice. The Act requires the Commission publish notice of any amendments issued, or proposed to be issued and grants the Commission the authority to issue and make immediately effective any amendment to an operating license upon a determination by the Commission that such amendment involves no significant hazards consideration, notwithstanding the pendency before the Commission of a request for a hearing from any person.

This biweekly notice includes all notices of amendments issued, or proposed to be issued from November 8, 2007 to November 21, 2007. The last biweekly notice was published on November 20, 2007 (72 FR 65360).

Notice of Consideration of Issuance of Amendments to Facility Operating Licenses, Proposed No Significant Hazards Consideration Determination, and Opportunity for a Hearing

The Commission has made a proposed determination that the following amendment requests involve no significant hazards consideration. Under the Commission's regulations in 10 CFR 50.92, this means that operation of the facility in accordance with the proposed amendment would not (1) involve a significant increase in the probability or consequences of an accident previously evaluated; or (2) create the possibility of a new or different kind of accident from any accident previously evaluated; or (3) involve a significant reduction in a margin of safety. The basis for this proposed determination for each amendment request is shown below.

The Commission is seeking public comments on this proposed determination. Any comments received within 30 days after the date of publication of this notice will be considered in making any final determination. Within 60 days after the date of publication of this notice, the licensee may file a request for a hearing with respect to issuance of the amendment to the subject facility operating license, and any person whose interest may be affected by this proceeding and who wishes to participate as a party in the proceeding must file a written request for a hearing and a petition for leave to intervene.

Normally, the Commission will not issue the amendment until the expiration of 60 days after the date of publication of this notice. The Commission may issue the license amendment before expiration of the 60-day period provided that its final determination is that the amendment involves no significant hazards consideration. In addition, the Commission may issue the amendment prior to the expiration of the 30-day comment period should circumstances change during the 30-day comment period such that failure to act in a timely way would result, for example in derating or shutdown of the facility. Should the Commission take action prior to the expiration of either the comment period or the notice period, it will publish in the **Federal Register** a notice of issuance. Should the Commission make a final No Significant Hazards Consideration Determination, any hearing will take place after issuance. The Commission expects that the need to take this action will occur very infrequently.

Written comments may be submitted by mail to the Chief, Rulemaking, Directives and Editing Branch, Division of Administrative Services, Office of Administration, U.S. Nuclear Regulatory Commission, Washington, DC 20555–0001, and should cite the publication date and page number of this **Federal Register** notice. Written comments may also be delivered to Room 6D22, Two White Flint North, 11545 Rockville Pike, Rockville, Maryland, from 7:30 a.m. to 4:15 p.m. Federal workdays. Copies of written comments received may be examined at the Commission's Public Document Room (PDR), located at One White Flint North, Public File Area O1F21, 11555 Rockville Pike (first floor), Rockville, Maryland. The filing of requests for a hearing and petitions for leave to intervene is discussed below.

Within 60 days after the date of publication of this notice, person(s) may file a request for a hearing with respect to issuance of the amendment to the subject facility operating license, and any person whose interest may be affected by this proceeding and who wishes to participate as a party in the proceeding must file a written request via electronic submission through the NRC E-Filing system for a hearing and a petition for leave to intervene. Requests for a hearing and a petition for leave to intervene shall be filed in accordance with the Commission's ''Rules of Practice for Domestic Licensing Proceedings'' in 10 CFR Part 2. Interested person(s) should consult a current copy of 10 CFR 2.309, which is available at the Commission's PDR, located at One White Flint North, Public File Area 01F21, 11555 Rockville Pike (first floor), Rockville, Maryland. Publicly available records will be accessible from the Agencywide Documents Access and Management System's (ADAMS) Public Electronic Reading Room on the Internet at the NRC Web site, *http://www.nrc.gov/reading-rm/doc-collections/cfr/.* If a request for a hearing or petition for leave to intervene is filed within 60 days, the Commission or a presiding officer designated by the Commission or by the Chief Administrative Judge of the Atomic Safety and Licensing Board Panel, will rule on the request and/or petition; and the Secretary or the Chief Administrative Judge of the Atomic Safety and Licensing Board will issue a notice of a hearing or an appropriate order.

As required by 10 CFR 2.309, a petition for leave to intervene shall set forth with particularity the interest of the petitioner in the proceeding, and how that interest may be affected by the results of the proceeding. The petition

should specifically explain the reasons why intervention should be permitted with particular reference to the following general requirements: (1) The name, address, and telephone number of the requestor or petitioner; (2) the nature of the requestor's/petitioner's right under the Act to be made a party to the proceeding; (3) the nature and extent of the requestor's/petitioner's property, financial, or other interest in the proceeding; and (4) the possible effect of any decision or order which may be entered in the proceeding on the requestor's/petitioner's interest. The petition must also set forth the specific contentions which the petitioner/requestor seeks to have litigated at the proceeding.

Each contention must consist of a specific statement of the issue of law or fact to be raised or controverted. In addition, the petitioner/requestor shall provide a brief explanation of the bases for the contention and a concise statement of the alleged facts or expert opinion which support the contention and on which the petitioner/requestor intends to rely in proving the contention at the hearing. The petitioner/requestor must also provide references to those specific sources and documents of which the petitioner is aware and on which the petitioner/requestor intends to rely to establish those facts or expert opinion. The petition must include sufficient information to show that a genuine dispute exists with the applicant on a material issue of law or fact. Contentions shall be limited to matters within the scope of the amendment under consideration. The contention must be one which, if proven, would entitle the petitioner/requestor to relief. A petitioner/requestor who fails to satisfy these requirements with respect to at least one contention will not be permitted to participate as a party.

Those permitted to intervene become parties to the proceeding, subject to any limitations in the order granting leave to intervene, and have the opportunity to participate fully in the conduct of the hearing.

If a hearing is requested, and the Commission has not made a final determination on the issue of no significant hazards consideration, the Commission will make a final determination on the issue of no significant hazards consideration. The final determination will serve to decide when the hearing is held. If the final determination is that the amendment request involves no significant hazards consideration, the Commission may issue the amendment and make it immediately effective, notwithstanding the request for a hearing. Any hearing held would take place after issuance of the amendment. If the final determination is that the amendment request involves a significant hazards consideration, any hearing held would take place before the issuance of any amendment.

A request for hearing or a petition for leave to intervene must be filed in accordance with the NRC E-Filing rule, which the NRC promulgated on August 28, 2007, (72 FR 49139). The E-Filing process requires participants to submit and serve documents over the internet or in some cases to mail copies on electronic storage media. Participants may not submit paper copies of their filings unless they seek a waiver in accordance with the procedures described below.

To comply with the procedural requirements of E-Filing, at least five (5) days prior to the filing deadline, the petitioner/requestor must contact the Office of the Secretary by e-mail at *HEARINGDOCKET@NRC.GOV,* or by calling (301) 415–1677, to request (1) a digital ID certificate, which allows the participant (or its counsel or representative) to digitally sign documents and access the E-Submittal server for any proceeding in which it is participating; and/or (2) creation of an electronic docket for the proceeding (even in instances in which the petitioner/requestor (or its counsel or representative) already holds an NRC-issued digital ID certificate). Each petitioner/requestor will need to download the Workplace Forms Viewer(tm) to access the Electronic Information Exchange (EIE), a component of the E-Filing system. The Workplace Forms Viewer™ is free and is available at *http://www.nrc.gov/site-help/e-submittals/install-viewer.html.* Information about applying for a digital ID certificate is available on NRC's public Web site at *http://www.nrc.gov/site-help/e-submittals/apply-certificates.html.*

Once a petitioner/requestor has obtained a digital ID certificate, had a docket created, and downloaded the EIE viewer, it can then submit a request for hearing or petition for leave to intervene. Submissions should be in Portable Document Format (PDF) in accordance with NRC guidance available on the NRC public Web site at *http://www.nrc.gov/site-help/e-submittals.html.* A filing is considered complete at the time the filer submits its documents through EIE. To be timely, an electronic filing must be submitted to the EIE system no later than 11:59 p.m. Eastern Time on the due date. Upon receipt of a transmission, the E-Filing system time-stamps the document and sends the submitter an e-mail notice confirming receipt of the document. The EIE system also distributes an e-mail notice that provides access to the document to the NRC Office of the General Counsel and any others who have advised the Office of the Secretary that they wish to participate in the proceeding, so that the filer need not serve the documents on those participants separately. Therefore, applicants and other participants (or their counsel or representative) must apply for and receive a digital ID certificate before a hearing request/petition to intervene is filed so that they can obtain access to the document via the E-Filing system.

A person filing electronically may seek assistance through the ''Contact Us'' link located on the NRC Web site at *http://www.nrc.gov/site-help/e-submittals.html* or by calling the NRC technical help line, which is available between 8:30 a.m. and 4:15 p.m., Eastern Time, Monday through Friday. The help line number is (800) 397–4209 or locally, (301) 415–4737.

Participants who believe that they have a good cause for not submitting documents electronically must file a motion, in accordance with 10 CFR 2.302(g), with their initial paper filing requesting authorization to continue to submit documents in paper format. Such filings must be submitted by: (1) First class mail addressed to the Office of the Secretary of the Commission, U.S. Nuclear Regulatory Commission, Washington, DC 20555–0001, *Attention:* Rulemaking and Adjudications Staff; or (2) courier, express mail, or expedited delivery service to the Office of the Secretary, Sixteenth Floor, One White Flint North, 11555 Rockville Pike, Rockville, Maryland, 20852, *Attention:* Rulemaking and Adjudications Staff. Participants filing a document in this manner are responsible for serving the document on all other participants. Filing is considered complete by first-class mail as of the time of deposit in the mail, or by courier, express mail, or expedited delivery service upon depositing the document with the provider of the service.

Non-timely requests and/or petitions and contentions will not be entertained absent a determination by the Commission, the presiding officer, or the Atomic Safety and Licensing Board that the petition and/or request should be granted and/or the contentions should be admitted, based on a balancing of the factors specified in 10 CFR 2.309(c)(1)(i)–(viii). To be timely, filings must be submitted no later than

11:59 p.m. Eastern Time on the due date.

Documents submitted in adjudicatory proceedings will appear in NRC's electronic hearing docket which is available to the public at *http://ehd.nrc.gov/EHD_Proceeding/home.asp*, unless excluded pursuant to an order of the Commission, an Atomic Safety and Licensing Board, or a Presiding Officer. Participants are requested not to include personal privacy information, such as social security numbers, home addresses, or home phone numbers in their filings. With respect to copyrighted works, except for limited excerpts that serve the purpose of the adjudicatory filings and would constitute a Fair Use application, participants are requested not to include copyrighted materials in their submission.

For further details with respect to this amendment action, see the application for amendment which is available for public inspection at the Commission's PDR, located at One White Flint North, Public File Area 01F21, 11555 Rockville Pike (first floor), Rockville, Maryland. Publicly available records will be accessible from the ADAMS Public Electronic Reading Room on the Internet at the NRC Web site, *http://www.nrc.gov/reading-rm/adams.html.* If you do not have access to ADAMS or if there are problems in accessing the documents located in ADAMS, contact the PDR Reference staff at 1 (800) 397–4209, (301) 415–4737 or by e-mail to *pdr@nrc.gov.*

Carolina Power & Light Company, Docket Nos. 50–325 and 50–324, Brunswick Steam Electric Plant (BSEP), Units 1 and 2, Brunswick County, North Carolina

Date of amendments request: January 22, 2007, as supplemented by letters dated June 21, July 18, July 31, and October 15, 2007.

Description of amendments request: The amendment would revise the Technical Specifications to support the transition to AREVA NP fuel and core design methodologies.

Basis for proposed no significant hazards consideration determination: As required by 10 CFR 50.91(a), the licensee has provided its analysis of the issue of no significant hazards consideration, which is presented below:

1. Does the proposed change involve a significant increase in the probability or consequences of an accident previously evaluated?

Response: No.

The proposed amendments revise the list of NRC-approved analytical methods used to establish core operating limits. Core operating limits are established to ensure that fuel design limits are not exceeded during operating transients or accidents. The analytical methods used to determine core operating limits are those methods that have previously been found acceptable by the NRC and are required to be listed in the Technical Specification section governing the Core Operating Limits Report. The application of these NRC-approved analytical methods will continue to ensure that acceptable operating limits are established and applied to operation of the reactor core.

The proposed amendments will add a new Technical Specification 3.2.3, ''Linear Heat Generation Rate (LHGR),'' for fuel bundles, add a new definition to Technical Specification 1.1 for LHGR, and revise Technical Specifications 3.4.1 and 3.7.6 to incorporate restrictions on LHGR when in single recirculation loop operation or with an inoperable Turbine Bypass System. These LHGR limits will be established using NRC-approved analytical methods to ensure that fuel performance during normal, transient, and accident conditions is acceptable.

Based on the above, the proposed amendments do not involve an increase in the probability or consequences of an accident previously evaluated.

2. Does the proposed change create the possibility of a new or different kind of accident from any accident previously evaluated?

Response: No.

As previously stated, the proposed amendments support transition from Global Nuclear Fuels Americas (GNF–A) fuel and core design and analysis services to AREVA NP fuel and core design and analysis services. The AREVA NP fuel assemblies which will be used in the BSEP Unit 1 and 2 cores will be similar in design to the GNF–A fuel that will be co-resident in the cores. The BSEP, Unit 1 and 2 cores in which this fuel will operate will be designed to meet all applicable design and licensing criteria. Adherence to these design and licensing criteria will not introduce any new modes of operation or introduce any new accident precursors, and thus will preclude the introduction of a new or different kind of accident from any accident previously evaluated.

3. Does the proposed change involve a significant reduction in a margin of safety?

Response: No.

The proposed amendments will continue to require that core operating limits be determined using NRC-approved analytical methods. Acceptable fuel performance is obtained by ensuring that the peak cladding temperature (PCT) during a postulated design basis loss-of-coolant accident (LOCA) is maintained less than the limits specified in 10 CFR 50.46, and that the core remains in a coolable geometry following a postulated design basis LOCA. The proposed amendments ensure that adequate margin will continue to be maintained to the 2200 degree PCT limit of 10 CFR 50.46, and the use of NRC-approved analytical methods will continue to ensure acceptable fuel performance during normal operations, as well as during transient and accident conditions. Therefore, the proposed amendments do not involve a significant reduction in a margin of safety.

The NRC staff has reviewed the licensee's analysis and, based on this review, it appears that the three standards of 10 CFR 50.92(c) are satisfied. Therefore, the NRC staff proposes to determine that the amendment request involves no significant hazards consideration.

Attorney for licensee: David T. Conley, Associate General Counsel II—Legal Department, Progress Energy Service Company, LLC, Post Office Box 1551, Raleigh, North Carolina 27602.

NRC Branch Chief: Thomas H. Boyce.

Carolina Power & Light Company, Docket Nos. 50–325 and 50–324, Brunswick Steam Electric Plant, Units 1 and 2, Brunswick County, North Carolina

Date of amendments request: August 6, 2007.

Description of amendments request: The amendment would revise the Technical Specifications (TSs) to implement Technical Specification Task Force (TSTF) Change TSTF–343, Revision 1, which allows the performance of visual examinations of the primary containment to be performed in accordance with the American Society of Mechanical Engineers (ASME) Boiler and Pressure Vessel Code, Section XI, Subsections IWE and IWL. The amendment would also make an administrative change to the TSs by eliminating a one-time requirement to perform containment leak rate testing that has already been completed.

Basis for proposed no significant hazards consideration determination: As required by 10 CFR 50.91(a), the licensee has provided its analysis of the issue of no significant hazards consideration, which is presented below:

1. Does the proposed change involve a significant increase in the probability or consequences of an accident previously evaluated?

Response: No.

The proposed change affects the frequency of visual examinations that will be performed for the concrete surfaces of the containment for the purpose of the Primary Containment Leakage Rate Testing Program. In addition, the proposed change allows those examinations to be performed during power operation as opposed to during a refueling outage. The frequency of visual examinations of the metallic and concrete surfaces of the containment and the mode of operation during which those examinations are performed has no relationship to or adverse impact on the probability of any of the initiating events assumed in the accident analyses. The proposed change would allow

visual examinations that are performed in accordance with NRC-approved ASME Section XI Code requirements, except where relief has been granted by the NRC, to meet the intent of visual examinations specified by Regulatory Guide 1.163, without requiring additional visual examinations in accordance with the Regulatory Guide. The intent of early detection of deterioration will continue to be met by the more vigorous requirements of the Code-required visual examinations. As such, the safety function of the containment as a fission product barrier is maintained.

The proposed change also includes the removal of an item in TS 5.5.12 which was incorporated to establish deadlines for performing the performance-based Type A leakage tests in conjunction with changing, on a one-time basis, the Type A test frequency. The specified Unit 1 and Unit 2 Type A test have been completed. As such, removal of this item is an administrative change.

The proposed change does not impact any accident initiators or analyzed events or assumed mitigation of accident or transient events. The proposed change does not involve the addition or removal of any equipment, or any design changes to the facility. Therefore, based on the above, the proposed change does not represent a significant increase in the probability or consequences of an accident previously evaluated.

2. Does the proposed change create the possibility of a new or different kind of accident from any accident previously evaluated?

Response: No.

The proposed change revises the Primary Containment Leakage Rate Testing Program in TS 5.5.12 for consistency with the requirements of 10 CFR 50.55a(g)(4) for components classified as Code Class MC and CC. The proposed change affects the frequency of visual examinations that will be performed for the metallic and concrete surfaces of containment and allows those examinations to be performed during power operation as opposed to during a refueling outage.

The proposed change does not involve a modification to the physical configuration of the plants (i.e., no new equipment will be installed), and does not revise the methods governing normal plant operation. Also, the proposed change will not impose any new or different requirements or introduce a new accident initiator, accident precursor, or malfunction mechanism.

The proposed change also includes the removal of an item in TS 5.5.12 which was incorporated to establish deadlines for performing the performance based Type A leakage tests in conjunction with changing, on a one-time basis, the Type A test frequency. The specified Unit 1 and Unit 2 Type A test have been completed. As such, removal of this item is an administrative change.

As such, the proposed change does not create the possibility of a new or different kind of accident from any accident previously evaluated.

3. Does the proposed change involve a significant reduction in a margin of safety?

Response: No.

The proposed change revises the Primary Containment Leakage Rate Testing Program in TS 5.5.12 for consistency with the requirements of 10 CFR 50.55a(g)(4) for components classified as Code Class MC and CC. The proposed change allows some of those examinations to be performed during power operation as opposed to during a refueling outage. As previously stated, the proposed change does not involve a modification to the physical configuration of the plants and does not revise the methods governing normal plant operation. As such, the safety function of the containment as a fission product barrier, will be maintained and is not adversely impacted by the proposed change.

The proposed change also includes the removal of an item in TS 5.5.12 which was incorporated to establish deadlines for performing the performance-based Type A leakage tests in conjunction with changing, on a one-time basis, the Type A test frequency. The specified Unit 1 and Unit 2 Type A test have been completed. As such, removal of this item is an administrative change.

Therefore, the proposed change does not involve a significant reduction in a margin of safety.

The NRC staff has reviewed the licensee's analysis and, based on this review, it appears that the three standards of 10 CFR 50.92(c) are satisfied. Therefore, the NRC staff proposes to determine that the amendment request involves no significant hazards consideration.

Attorney for licensee: David T. Conley, Associate General Counsel II—Legal Department, Progress Energy Service Company, LLC, Post Office Box 1551, Raleigh, NC 27602.

NRC Branch Chief: Thomas H. Boyce.

Dominion Nuclear Connecticut, Inc., Docket No. 50–336 Millstone Power Station, Unit No. 2, New London County, Connecticut

Date of amendment request: February 20, 2007.

Description of amendment request: The proposed amendment would revise the Millstone Power Station, Unit No. 2 (MPS2) Technical Specifications (TS) to eliminate Surveillance Requirement (SR) 4.5.2.e which requires flow rate verification for each charging pump. Charging pump flow is no longer relied upon for design basis mitigation at MPS2 and the charging pumps have been classified as non-risk significant in the MPS2 Probabilistic Risk Assessment model. Therefore, the proposed amendment is requesting to remove the charging pump flow verification requirements currently located in the TS SR 4.5.2.e.

Basis for proposed no significant hazards consideration determination: As required by 10 CFR 50.91(a), the licensee has provided its analysis of the issue of no significant hazards consideration, which is presented below:

1. Does the proposed amendment involve a significant increase in the probability or consequences of an accident previously evaluated?

Response: No.

The FSAR [Final Safety Analysis Report] Chapter 14 accident analyses for MPS2 take no credit for the flow delivered by the charging pumps. Additionally, the proposed change does not modify any plant equipment or method of operation for any system, structure or component required for safe operation of the facility or mitigation of accidents assumed in the facility safety analyses. As such, the proposed amendment does not increase the probability or consequences of an accident previously evaluated.

2. Does the proposed amendment create the possibility of a new or different kind of accident from any accident previously evaluated?

Response: No.

The proposed change does not modify any plant equipment or method of operation for any system, structure or component required for safe operation of the facility or mitigation of accidents assumed in the facility safety analyses. As such, no new failure modes are introduced by the proposed change. Consequently, the proposed amendment does not introduce any accident initiators or malfunctions that would cause a new or different kind of accident. Therefore, the proposed amendment does not create the possibility of a new or different kind of accident from any accident previously evaluated.

3. Does the proposed amendment involve a significant reduction in a margin of safety?

Response: No.

The FSAR Chapter 14 accident analyses for MPS2 take no credit for the charging pumps. The TS change does not involve a significant reduction in a margin of safety because the proposed change does not affect equipment design or operation, and there are no changes being made to the technical specification required safety limits or safety system settings. The proposed change does not affect any of the assumptions used in the accident analysis, nor does it affect any method of operation for equipment important to plant safety. Therefore, the margin of safety is not impacted by the proposed amendment.

The NRC staff has reviewed the licensee's analysis and, based on this review, it appears that the three standards of 10 CFR 50.92(c) are satisfied. Therefore, the NRC staff proposes to determine that the amendment request involves no significant hazards consideration.

Attorney for licensee: Lillian M. Cuoco, Senior Nuclear Counsel, Dominion Nuclear Connecticut, Inc., Rope Ferry Road, Waterford, CT 06385.

NRC Branch Chief: Harold K. Chernoff.

Dominion Nuclear Connecticut Inc., et al., Docket Nos. 50–336 and 50–423, Millstone Power Station, Unit Nos. 2 and 3, New London County, Connecticut.

Date of amendment request: July 2, 2007.

Description of amendment request: The proposed amendment would modify the Technical Specification (TS) 4.0.5 to reference the American Society of Mechanical Engineers (ASME) *Code for Operation and Maintenance of Nuclear Power Plants* (OM Code) instead of Section XI of the ASME *Boiler and Pressure Vessel Code.* Specifically, the proposed amendment would modify the inservice inspection (ISI) of ASME Code Class 1, 2, and 3 components and inservice testing of ASME Code Class 1, 2, and 3 pumps and valves to reflect the requirements in the ASME OM Code. In addition, the redundant requirement in TS 4.0.5 to maintain an ISI program is being proposed for removal, based on duplicate regulatory requirements set forth in Title 10 of the *Code of Federal Regulations* (10 CFR) Section 50.55a.

Basis for proposed no significant hazards consideration determination: As required by 10 CFR 50.91(a), the licensee has provided its analysis of the issue of no significant hazards consideration, which is presented below:

1. Does the proposed amendment involve a significant increase in the probability or consequences of an accident previously evaluated?

Response: No.

The proposed change does not modify any plant equipment and does not impact any failure modes that could lead to an accident. Additionally, the proposed change has no effect on the consequence of any analyzed accident since the change does not affect the function of any equipment credited for accident mitigation. The proposed change incorporates revisions to the ASME Code that result in a net improvement in the measures for testing pumps and valves. Removing from TS the duplicate requirement in the regulations to maintain an ISI program in accordance with ASME codes and standards does not impact any accident initiators or analyzed events or mitigation of events. No reduction in previous commitments to 10 CFR 50.55a(g) are being proposed by this change.

Based on the discussion above, the proposed change does not involve a significant increase in the probability or consequences of an accident previously evaluated.

2. Does the proposed amendment create the possibility of a new or different kind of accident from any accident previously evaluated?

Response: No.

The proposed change does not involve a modification to the physical configuration of the plant (i.e., no new equipment will be installed) or adversely affect methods governing normal plant operation. The proposed change will not impose any new or different requirements or introduce a new accident initiator, accident precursor, or malfunction mechanism. The proposed change does not alter existing test criteria or frequencies. Additionally, there is no change in the types or increases in the amounts of any effluent that may be released off-site and there is no increase in individual or cumulative occupational exposure. The proposed changes incorporate revisions to the ASME Code that result in a net improvement in the measures for testing pumps and valves. Removal of the duplicate TS requirement to maintain an ISI program will not alter the commitment to the current ISI program requirements in 10 CFR 50.55a or any other TS requirements related to inservice inspection.

Based on the discussion above, the proposed change does not create the possibility of a new or different kind of accident from any accident previously evaluated.

3. Does the proposed amendment involve a significant reduction in a margin of safety?

Response: No.

The proposed change revises TS 4.0.5 regarding inservice testing of ASME Code Class 1, 2, and 3 pumps and valves, for consistency with the requirements of 10 CFR 50.55a(f)(4). The proposed change incorporates an administrative clarification to the frequencies for IST and incorporates revisions to the ASME Code that result in a net improvement in the measures for testing pumps and valves. No setpoints or safety limit settings are being revised. The safety function of the affected pumps and valves will continue to be confirmed through inspection and testing. Removal of the ISI program requirement from TS 4.0.5 does not remove the requirement from regulations, and therefore, will not diminish the current station approved programs and procedures that implement the regulatory criteria of 10 CFR 50.55a(g) to maintain an acceptable ISI program in accordance with the ASME Code.

Based on the discussion above, the proposed change does not involve a significant reduction in a margin of safety.

The NRC staff has reviewed the licensee's analysis and, based on this review, it appears that the three standards of 10 CFR 50.92(c) are satisfied. Therefore, the NRC staff proposes to determine that the amendment request involves no significant hazards consideration.

Attorney for licensee: Lillian M. Cuoco, Esquire, Senior Nuclear Counsel, Dominion Nuclear Connecticut, Inc., Building 475, 5th Floor, Rope Ferry Road, Waterford, CT 06141–5127.

NRC Branch Chief: Harold K. Chernoff.

Duke Power Company LLC, et al., Docket Nos. 50–413 and 50–414, Catawba Nuclear Station, Units 1 and 2, York County, South Carolina

Duke Power Company LLC, Docket Nos. 50–369 and 50–370, McGuire Nuclear Station, Units 1 and 2, Mecklenburg County, North Carolina

Duke Power Company LLC, Docket Nos. 50–269, 50–270, and 50–287, Oconee Nuclear Station, Units 1, 2, and 3, Oconee County, South Carolina

Oconee Nuclear Station Independent Spent Fuel Storage Installation NRC License No. SNM–2503, Docket No. 72–4, Oconee County, South Carolina

Date of amendment request: March 14, 2007.

Description of amendment request: The amendments would revise the licenses to reflect the change in the name of the licensee from Duke Power Company LLC to Duke Energy Carolinas, LLC. The proposed amendments are a name change only. There is no change in the state of incorporation, registered agent, registered office, rights or liabilities of the company. Nor is there a change in the function of the licensee or the way in which it does business.

Basis for proposed no significant hazards consideration determination: As required by 10 CFR 50.91(a), the licensee has provided its analysis of the issue of no significant hazards consideration, which is presented below:

1. Does the proposed amendment involve a significant increase in the probability or consequences of an accident previously evaluated?

Response: No.

The proposed amendments are for a name change only. The amendments do not involve any change in the technical qualifications of the licensee or the design, configuration, or operation of the nuclear units. All Limiting Conditions for Operation, Limiting Safety System Settings and Safety Limits specified in the Technical Specifications remain unchanged. Also, the Physical Security Plans and related plans, the Operator Training and Requalification Programs, the Quality Assurance Programs, and the Emergency Plans will not be materially changed by the proposed name change. The name change amendments will not affect the executive oversight provided by the Chief Nuclear Officer and his staff.

Therefore, the proposed amendments do not involve any increase in the probability or consequences of an accident previously analyzed.

2. Does the proposed amendment create the possibility of a new or different kind of accident from any accident previously evaluated?

Response: No.

The proposed amendments do not involve any change in the design, configuration, or operation of the nuclear plant. The current plant design, design bases, and plant safety analysis will remain the same.

The Limiting Conditions for Operations, Limiting Safety System Settings and Safety Limits specified in the Technical Specifications are not affected by the proposed changes. As such, the plant conditions for which the design basis accident analyses were performed remain valid.

The proposed amendments do not introduce a new mode of plant operation or new accident precursors, do not involve any physical alterations to plant configurations, or make changes to system setpoints that could initiate a new or different kind of accident.

Therefore, the proposed amendments do not create the possibility of a new or different kind of accident from any accident previously evaluated.

3. Does the proposed amendment involve a significant reduction in a margin of safety?

Response: No.

The proposed amendments do not involve a change in the design, configuration, or operation of the nuclear plants. The change does not affect either the way in which the plant structures, systems, and components perform their safety function or their design and licensing bases.

Plant safety margins are established through Limiting Conditions for Operation, Limiting Safety System Settings and Safety Limits specified in the Technical Specifications. Because there is no change to the physical design of the plant, there is no change to any of these margins.

Therefore, the proposed amendments do not involve a significant reduction in a margin of safety.

The NRC staff has reviewed the licensee's analysis and, based on this review, it appears that the three standards of 10 CFR 50.92(c) are satisfied. Therefore, the NRC staff proposes to determine that the amendment request involves no significant hazards consideration.

Attorney for licensee: Ms. Lisa F. Vaughn, Associate General Counsel and Managing Attorney, Duke Energy Carolinas, LLC, 526 South Church Street, EC07H, Charlotte, NC 28202.

NRC Branch Chief: Evangelos C. Marinos.

Energy Northwest, Docket No. 50–397, Columbia Generating Station, Benton County, Washington

Date of amendment request: November 7, 2007.

Description of amendment request: The proposed amendment would delete License Condition 2.F, which requires reporting of violations of certain other requirements contained in Section 2.C of the license.

The NRC staff issued a ''Notice of Availability of Model Application Concerning Elimination of Typical License Condition Requiring Reporting of Violations of Section 2.C of Operating License Using the Consolidated Line Item Improvement Process'' in the **Federal Register** on November 4, 2005 (70 FR 67202). The notice referenced a model safety evaluation, a model no significant hazards consideration (NSHC) determination, and a model license amendment request published in the **Federal Register** on August 29, 2005 (70 FR 51098). In its application dated November 7, 2007, the licensee affirmed the applicability of the model NSHC determination which is presented below.

Basis for proposed no significant hazards consideration determination: As required by 10 CFR 50.91(a), an analysis of the issue of NSHC adopted by the licensee is presented below:

1. Does the change involve a significant increase in the probability or consequences of an accident previously evaluated?

Response: No.

The proposed change involves the deletion of a reporting requirement. The change does not affect plant equipment or operating practices and therefore does not significantly increase the probability or consequences of an accident previously evaluated.

2. Does the change create the possibility of a new or different kind of accident from any accident previously evaluated?

Response: No.

The proposed change is administrative in that it deletes a reporting requirement. The change does not add new plant equipment, change existing plant equipment, or affect the operating practices of the facility. Therefore, the change does not create the possibility of a new or different kind of accident from any accident previously evaluated.

3. Does the proposed change involve a significant reduction in a margin of safety?

Response: No.

The proposed change deletes a reporting requirement. The change does not affect plant equipment or operating practices and therefore does not involve a significant reduction in a margin of safety.

The NRC staff has reviewed the analysis adopted by the licensee and, based upon this review, it appears that the standards of 10 CFR 50.92(c) are satisfied. Therefore, the NRC staff proposes to determine that the request for amendment involves NSHC.

Attorney for licensee: William A. Horin, Esq., Winston & Strawn, 1700 K Street, NW., Washington, DC 20006–3817.

NRC Branch Chief: Thomas G. Hiltz.

Entergy Nuclear Operations, Inc., Docket No. 50–247, Indian Point Nuclear Generating Unit No. 2 (IP2), Westchester County, New York

Date of amendment request: October 24, 2007.

Description of amendment request: The proposed amendment would revise Technical Specification (TS) requirements related to the containment buffering agent used for pH control under post loss-of-coolant accident (LOCA) conditions. Specifically, the proposal would approve the use of sodium tetraborate (STB) as the buffering agent instead of the currently approved compound, trisodium phosphate (TSP). The reason for this change in buffering agents is to minimize the potential for an adverse chemical interaction between the TSP and certain insulation materials in the containment that could degrade flow through the sump screens following certain design-basis accident scenarios such as a LOCA.

Basis for proposed no significant hazards consideration determination: As required by 10 CFR 50.91(a), the licensee has provided its analysis of the issue of no significant hazards consideration, which is presented below:

1. Does the proposed change involve a significant increase in the probability or consequences of an accident previously evaluated?

Response—No.

The proposed amendment does not involve a significant increase in the probability of an accident previously evaluated because the containment buffering agent is not an initiator of any analyzed accident. The proposed change does not impact any failure modes that could lead to an accident.

The proposed amendment does not involve a significant increase in the consequences of an accident previously evaluated. The buffering agent in containment is designed to buffer the acids expected to be produced after a LOCA and is credited in the radiological analysis for iodine retention. Utilizing STB as a buffering agent ensures the post LOCA containment sump mixture will have a pH ≥ 7.0. The proposed change of replacing TSP with STB results in the radiological consequences remaining within the limits of 10 CFR 50.67 as demonstrated by existing analyses of record.

Therefore, operation of the facility in accordance with the proposed amendment would not involve a significant increase in the probability or consequences of an accident previously evaluated.

2. Does the proposed change create the possibility of a new or different kind of accident from any accident previously evaluated?

Response—No.

The proposed amendment does not create the possibility of a new or different kind of accident from any accident previously evaluated. STB is a passive component that is proposed to be used at IP2 as a buffering agent to increase the pH of the initially acidic post-LOCA containment water to a more neutral pH. Changing the proposed buffering agent from TSP to STB does not constitute an accident initiator or create a new or different

kind of accident previously analyzed. The proposed amendment does not involve operation of any required systems, structures or components in a manner or configuration different from those previously recognized or evaluated. No new failure mechanisms will be introduced by the changes being requested.

Therefore, the proposed amendment does not create the possibility of a new or different kind of accident from any accident previously evaluated.

3. Does the proposed change involve a significant reduction in a margin of safety?

Response—No.

The proposed amendment does not involve a significant reduction in a margin of safety. The proposed amendment of changing the buffering agent from TSP to STB results in equivalent control of maintaining sump pH at 7.0 or greater, thereby controlling containment atmosphere iodine and ensuring the radiological consequences of a LOCA are within regulatory limits. The use of STB also reduces the potential for exacerbating sump screen blockage due to a chemical interaction between TSP and certain calcium sources used in containment. This proposed amendment eliminates the formation of calcium phosphate precipitate thereby reducing the overall amount of precipitate that may be formed in a postulated LOCA. The buffer change would minimize the potential chemical effects and should enhance the ability of the emergency core cooling system to perform the post-accident mitigating functions.

Therefore, the proposed amendment does not involve a significant reduction in [a] margin of safety.

The NRC staff has reviewed the licensee's analysis and, based on this review, it appears that the three standards of 10 CFR 50.92(c) are satisfied. Therefore, the NRC staff proposes to determine that the amendment request involves no significant hazards consideration.

Attorney for licensee: Mr. William C. Dennis, Assistant General Counsel, Entergy Nuclear Operations, Inc., 440 Hamilton Avenue, White Plains, NY 10601.

NRC Branch Chief: Mark G. Kowal.

Entergy Nuclear Operations, Inc., Docket No. 50–286, Indian Point Nuclear Generating Unit No. 3 (IP3), Westchester County, New York

Date of amendment request: October 24, 2007.

Description of amendment request: The proposed amendment would revise Technical Specification (TS) requirements regarding the setpoint and definition of the low-low level alarm on the Refueling Water Storage Tank (RWST). Specifically, the proposal would revise the setpoint of the low-low level alarm from a range of greater than or equal to 10.5 ft and less than or equal to 12.5 ft to a range of greater than or equal to 9.0 ft and less than or equal to 11.0 ft, and revise the definition of the RWST ''low level alarm'' to ''low-low level alarm.'' The reason for these changes is to ensure that adequate water is supplied to the containment floor to eliminate the risk of vortexing and/or draw down at the sump strainer modules following a small-break loss-of-coolant accident (LOCA). The proposed changes are being requested to support resolution of the pressurized-water reactor sump performance issue involving debris accumulation, Generic Safety Issue (GSI)–191.

Basis for proposed no significant hazards consideration determination: As required by 10 CFR 50.91(a), the licensee has provided its analysis of the issue of no significant hazards consideration, which is presented below:

1. Does the proposed change involve a significant increase in the probability or consequences of an accident previously evaluated?

Response: No.

The proposed changes to the Technical Specifications are consistent with the assumptions of all design basis accidents, as they exist currently and as affected subsequent to the implementation of the proposed amendment. The change in the RWST low-low level alarm setpoint range has been demonstrated to be within the safety margins for post-accident parameters and, in most cases, actually beneficial to plant post-accident response capability. The RWST is designed to respond to a variety of accidents, and, for operation in Modes 1 through 4, it serves no other purpose. Therefore, any adjustment of an intermediate level setpoint cannot increase the probability of a design basis accident. The change in the definition of the RWST ''low level alarm'' to ''low-low level alarm'' is editorial and therefore does not affect the function of the alarm. Therefore, the proposed changes do not involve a significant increase in the probability or consequences of an accident previously evaluated.

2. Does the proposed change create the possibility of a new or different kind of accident from any accident previously evaluated?

Response: No.

The proposed changes represent a minor adjustment to an existing setpoint range. The effect of the changes will be to assure recirculation flow following a LOCA with consideration for sump strainer installation, in response to GSI–191. However, the RWST will continue to perform its function in essentially the same manner that it has since original plant design. No changes in equipment operation or procedural control will result from this amendment that could possibly degrade the performance of the RWST or cause it to be operated in a manner inconsistent with existing design basis assumptions. The change in the definition of the RWST ''low level alarm'' to ''low-low level alarm'' is editorial and therefore does not affect the function of the alarm. Therefore, the proposed changes do not create the possibility of a new or different kind of accident from any previously evaluated.

3. Does the proposed change involve a significant reduction in a margin of safety?

Response: No.

The proposed changes improve the margin to safety, especially with respect to post-accident temperature/pressure and dose consequences during injection and, most importantly, pump performance under postulated sump debris conditions during recirculation. Significant margin is available to preclude air ingestion in the ECCS [emergency core cooling system] pumps, and sufficient time is available for the operators to perform the switchover to recirculation. The change in the definition of the RWST ''low level alarm'' to ''low-low level alarm'' is editorial and therefore does not affect the function of the alarm. Therefore, the proposed changes do not involve a significant reduction in a margin of safety.

The NRC staff has reviewed the licensee's analysis and, based on this review, it appears that the three standards of 10 CFR 50.92(c) are satisfied. Therefore, the NRC staff proposes to determine that the amendment request involves no significant hazards consideration.

Attorney for licensee: Mr. William C. Dennis, Assistant General Counsel, Entergy Nuclear Operations, Inc., 440 Hamilton Avenue, White Plains, NY 10601.

NRC Branch Chief: Mark G. Kowal.

Exelon Generation Company, LLC, Docket Nos. STN 50–456 and STN 50–457, Braidwood Station, Units 1 and 2, Will County, Illinois

Exelon Generation Company, LLC, Docket Nos. STN 50–454 and STN 50–455, Byron Station, Unit Nos. 1 and 2, Ogle County, Illinois

AmerGen Energy Company, LLC, Docket No. 50–461, Clinton Power Station, Unit No. 1, DeWitt County, Illinois

Exelon Generation Company, LLC, Docket Nos. 50–237 and 50–249, Dresden Nuclear Power Station, Units 2 and 3, Grundy County, Illinois

Exelon Generation Company, LLC, Docket Nos. 50–373 and 50–374, LaSalle County Station, Units 1 and 2, LaSalle County, Illinois

AmerGen Energy Company, LLC, et al., Docket No. 50–219, Oyster Creek Nuclear Generating Station, Ocean County, New Jersey

Exelon Generation Company, LLC, and PSEG Nuclear LLC, Docket Nos. 50–277 and 50–278, Peach Bottom Atomic Power Station, Units 2 and 3, York and Lancaster Counties, Pennsylvania

Exelon Generation Company, LLC, Docket Nos. 50–254 and 50–265, Quad Cities Nuclear Power Station, Units 1 and 2, Rock Island County, Illinois

AmerGen Energy Company, LLC, Docket No. 50–289, Three Mile Island Nuclear Station, Unit 1 (TMI–1), Dauphin County, Pennsylvania

Date of amendment request: July 19, 2007.

Description of amendment request: The proposed amendment would revise Technical Specification (TS) Sections 5.3.1/6.3.1, ''Unit Staff Qualifications,'' for operator license applicants in accordance with current industry standards for education and experience eligibility requirements. The proposed amendment would permit changes to the unit staff qualification education and experience eligibility requirements for licensed operators. The proposal will bring Exelon Generation Company, LLC (EGC) and AmerGen Energy Company, LLC (AmerGen) sites in alignment with current industry practices and facilitate the development of a pre-initial licensed operator training program.

Basis for proposed no significant hazards consideration determination: As required by 10 CFR 50.91(a), the licensee has provided its analysis of the issue of no significant hazards consideration, which is presented below:

1. Will operation of the facility in accordance with the proposed amendment involve a significant increase in the probability or consequences of an accident previously evaluated?

Response: No.

Licensed operator qualification and training can have an indirect impact on accidents previously evaluated. However, the NRC considered this impact during the rulemaking process, and by promulgation of the revised 10 CFR 55 rule, determined that this impact remains acceptable when licensees have an accredited licensed operator training program which is based on a systems approach to training (SAT). The NRC has concluded in RIS [Regulatory Issue Summary] 2001–01 and NUREG–1021 that standards and guidelines applied by INPO [the Institute of Nuclear Power Operations] in their accredited training programs are equivalent to those put forth by or endorsed by the NRC. Therefore, maintaining an INPO accredited SAT licensed operator training program is equivalent to maintaining an NRC approved licensed operator training program which conforms with applicable NRC Regulatory Guidelines or NRC endorsed industry standards. The proposed changes conform to ACAD [air containment atmosphere distribution] 00–003, Revision 1 licensed operator education and experience eligibility requirements.

Based on the above, EGC and AmerGen conclude that the proposed changes do not involve a significant increase in the probability or consequences of an accident previously evaluated.

2. Will operation of the facility in accordance with the proposed amendment create the possibility of a new or different kind of accident from any accident previously evaluated?

Response: No.

The proposed amendment involves changes to the licensed operator training programs, which are administrative in nature. The EGC and AmerGen licensed operator training programs have been accredited by INPO and are based on SAT.

Based on the above discussion, EGC and AmerGen conclude that the proposed changes do not create the possibility of a new or different kind of accident from any accident previously evaluated.

3. Will operation of the facility in accordance with the proposed amendment involve a significant reduction in a margin of safety?

Response: No.

The proposed TS changes are administrative in nature. The proposed TS changes do not affect plant design, hardware, system operation, or procedures for accident mitigation systems. The proposed changes do not impact the performance or proficiency requirements for licensed operators. As a result, the ability of the plant to respond to and mitigate accidents is unchanged by the proposed TS changes. Therefore, these changes do not involve a significant reduction in a margin of safety.

Based on the above, EGC and AmerGen conclude that the proposed changes do not involve a significant reduction in a margin of safety.

Based on the above evaluation of the three criteria, EGC and AmerGen conclude that the proposed amendment presents no significant hazards consideration under the standards set forth in 10 CFR 50.92(c), and, accordingly, a finding of ''no significant hazards consideration'' is justified.

The NRC staff has reviewed the licensee's analysis and, based on this review, it appears that the three standards of 10 CFR 50.92(c) are satisfied. Therefore, the NRC staff proposes to determine that the requested amendments involve no significant hazards consideration.

Attorney for licensee: Mr. Bradley Fewell, Associate General Counsel, Exelon Generation Company, LLC, 4300 Winfield Road, Warrenville, IL 60555.

NRC Branch Chief: Russell Gibbs.

Exelon Generation Company, LLC, Docket Nos. STN 50–456 and STN 50–457, Braidwood Station, Units 1 and 2, Will County, Illinois

Exelon Generation Company, LLC, Docket Nos. STN 50–454 and STN 50–455, Byron Station, Unit Nos. 1 and 2, Ogle County, Illinois

Exelon Generation Company, LLC, Docket Nos. 50–237 and 50–249, Dresden Nuclear Power Station, Units 2 and 3, Grundy County, Illinois

Exelon Generation Company, LLC, Docket No. 50–352 and No. 50–353, Limerick Generating Station, Unit 1 and 2, Montgomery County, Pennsylvania

AmerGen Energy Company, LLC, et al., Docket No. 50–219, Oyster Creek Nuclear Generating Station, Ocean County, New Jersey

Exelon Generation Company, LLC, and PSEG Nuclear LLC, Docket Nos. 50–277 and 50–278, Peach Bottom Atomic Power Station, Units 2 and 3,York and Lancaster Counties, Pennsylvania

Exelon Generation Company, LLC, Docket Nos. 50–254 and 50–265, Quad Cities Nuclear Power Station, Units 1 and 2, Rock Island County, Illinois

AmerGen Energy Company, LLC, Docket No. 50–289, Three Mile Island Nuclear Station, Unit 1 (TMI–1), Dauphin County, Pennsylvania

Date of amendment request: August 8, 2007.

Description of amendment request: The proposed amendment replaces references to Section XI of the American Society of Mechanical Engineers (ASME) Boiler and Pressure Vessel Code with references to the ASME Code for Operation and Maintenance of Nuclear Power Plants (OM Code) in the applicable technical specification (TS) section for the Inservice Testing Program (IST) for the Exelon Generation Company, LLC, and AmerGen Energy Company, LLC, (the licensees) plants that have implemented industry Improved Technical Specifications. The proposed changes are based on TS Task Force (TSTF) 479–A, Revision 0, ''Changes to Reflect Revision of 10 CFR 50.55a,'' as modified by TSTF–497, Revision 0, ''Limit Inservice Testing Program SR [Surveillance Requirement] 3.0.2 Application to Frequencies of 2 Years or Less.'' In addition, the proposed amendment adds a provision in the applicable TS section to only apply the extension allowance of SR 3.0.2 to the frequency table listed in the TS as part of the IST and to normal and accelerated inservice testing frequencies of two years or less, as applicable.

Basis for proposed no significant hazards consideration determination: As required by 10 CFR 50.91(a), the licensee has provided its analysis of the issue of no significant hazards consideration, which is presented below:

1. Does the change involve a significant increase in the probability or consequences of an accident previously evaluated?

Response: No.

The proposed changes revise the applicable TS Section to conform to the requirements of 10 CFR 50.55a, ''Codes and

standards,'' paragraph (f) regarding the inservice testing of pumps and valves. The current TS reference the ASME Boiler and Pressure Vessel Code, Section XI, requirements for the inservice testing of ASME Code Class 1, 2, and 3 pumps and valves. The proposed changes would reference the ASME OM Code as applicable, which is consistent with 10 CFR 50 .55a, paragraph (f), ''Inservice testing requirements.'' In addition, the proposed changes clarify that the extension allowance of SR 3.0.2 only applies to the frequency table listed in the TS, if applicable, as part of the Inservice Testing Program and to normal and accelerated inservice testing frequencies of two years or less. The definitions of the frequencies are not changed by this license amendment request.

The proposed changes are administrative in nature, do not affect any accident initiators, do not affect the ability to successfully respond to previously evaluated accidents and do not affect radiological assumptions used in the evaluations. Thus, the probability or radiological consequences of any accident previously evaluated are not increased.

Therefore, the proposed changes do not involve a significant increase in the probability or consequences of an accident previously evaluated.

2. Does the change create the possibility of a new or different kind of accident from any accident previously evaluated?

Response: No.

The proposed changes revise the applicable TS Section to conform to the requirements of 10 CFR 50.55a(f) regarding the inservice testing of pumps and valves. The current TS Section references the ASME Boiler and Pressure Vessel Code, Section XI, requirements for the inservice testing of ASME Code Class 1, 2, and 3 pumps and valves. The proposed changes would reference the ASME OM Code as applicable, which is consistent with 10 CFR 50.55a(f). In addition, the proposed changes clarify that the extension allowance of SR 3.0.2 only applies to the frequency table listed in the TS, if applicable, as part of the Inservice Testing Program and to normal and accelerated inservice testing frequencies of two years or less. The definitions of the frequencies are not changed by this license amendment request.

The proposed changes to the applicable TS Section do not affect the performance of any structure, system, or component credited with mitigating any accident previously evaluated and do not introduce any new modes of system operation or failure mechanisms.

Therefore, the proposed changes do not create the possibility of a new or different kind of accident from any previously evaluated.

3. Does the change involve a significant reduction in a margin of safety?

Response: No.

The proposed changes revise the applicable TS Section for Braidwood Station Units 1 and 2, Byron Station Units 1 and 2, Dresden Nuclear Power Station Units 2 and 3, Limerick Generating Station Units 1 and 2, Oyster Creek Generating Station, Peach Bottom Atomic Power Station Units 2 and 3, Quad Cities Nuclear Power Station Units 1 and 2, and Three Mile Island Unit 1 to conform to the requirements of 10 CFR 50.55a(f) regarding the inservice testing of pumps and valves.

The current TS Section references the ASME Boiler and Pressure Vessel Code, Section XI, requirements for the inservice testing of ASME Code Class 1, 2, and 3 pumps and valves. The proposed changes would reference the ASME OM Code as applicable, which is consistent with the 10 CFR 50.55a(f). In addition, the proposed changes clarify that the extension allowance of SR 3.0.2 only applies to the frequency table listed in the TS, if applicable, as part of the Inservice Testing Program and to normal and accelerated inservice testing frequencies of two years or less. The definitions of the frequencies are not changed by this license amendment request.

The proposed changes do not modify the safety limits or setpoints at which protective actions are initiated and do not change the requirements governing operation or availability of safety equipment assumed to operate to preserve the margin of safety.

Therefore, the proposed changes do not involve a significant reduction in a margin of safety.

The NRC staff has reviewed the licensee's analysis and, based on this review, it appears that the three standards of 10 CFR 50.92(c) are satisfied. Therefore, the NRC staff proposes to determine that the requested amendments involve no significant hazards consideration.

Attorney for licensee: Mr. Bradley Fewell, Associate General Counsel, Exelon Generation Company, LLC, 4300 Winfield Road, Warrenville, IL 60555.

NRC Branch Chief: Russell Gibbs.

Exelon Generation Company, LLC, Docket Nos. 50–237 and 50–249, Dresden Nuclear Power Station (DNPS), Units 2 and 3, Grundy County, Illinois Docket Nos. 50–254 and 50–265, Quad Cities Nuclear Power Station (QCNPS), Units 1 and 2, Rock Island County, Illinois

Date of application for amendment request: August 1, 2007.

Description of amendment request: The proposed amendment would revise the technical specification (TS) allowable value (AV) for the Reactor Protection System (RPS) Instrumentation Function 10, ''Turbine Condenser Vacuum—Low,'' specified in TS Table 3.3.1.1–1, ''Reactor Protection System Instrumentation.'' The proposed amendment also revises the Channel Functional Test (CFT) and Channel Calibration (CC) Surveillance Test Interval (STI) for DNPS TS Table 3.3.1.1–1, Function 10. As part of the DNPS STI revision, surveillance requirement (SR) 3.3.1.10, ''Channel Calibration,'' which is specific to the Turbine Condenser Vacuum—Low instrument function, is deleted since it is no longer applicable.

Basis for proposed no significant hazards consideration determination: As required by 10 CFR 50.91(a), the licensee has provided its analysis of the issue of no significant hazards consideration, which is presented below:

1. The proposed changes do not involve a significant increase in the probability or consequences of an accident previously evaluated.

Revision of Allowable Value

The proposed license amendment implements a revised AV for the Turbine Condenser Vacuum—Low scram instrument function at DNPS, Units 2 and 3 and QCNPS, Units 1 and 2.

The proposed changes to the DNPS and QCNPS Turbine Condenser Vacuum—Low scram AV do not require modification [of] any system interface or affect the probability of any event initiators at the facilities. Overall RPS performance will remain within the bounds of the previously performed accident analyses, since no hardware changes are proposed.

There will be no degradation in the performance of, or an increase in the number of challenges imposed on safety-related equipment that are assumed to function during an accident situation. The proposed changes will not alter any assumptions or change any mitigation actions in the radiological consequence evaluations in the Updated Final Safety Analysis Report. The proposed changes are consistent with safety analysis assumptions and resultant consequences.

For these reasons, the proposed DNPS and QCNPS AV changes do not involve a significant increase in the probability or consequences of an accident previously evaluated.

Relaxation of STIs (DNPS only)

The proposed license amendment implements a revised CFT and CC STI for the Turbine Condenser Vacuum—Low scram instrument function at DNPS Units 2 and 3. The proposed DNPS TS change to increase the CFT STI for the Turbine Condenser Vacuum—Low scram instrument function is based on an analytical method that has been reviewed and approved by the NRC [Nuclear Regulatory Commission].

The proposed change to relax the CFT STI implements recommendations from a generic evaluation that was developed by General Electric (GE) and the Boiling Water Reactor Owners' Group (BWROG), and subsequently approved by the NRC. This licensing topical report (LTR) assessed the reliability of TS actuation instrumentation and concluded that extending AOTS [allowed outage times] and CFT STIs for test and repair activities would enhance operational safety.

The proposed DNPS TS change to increase the CC STI for the Turbine Condenser Vacuum—Low scram instrument function is based upon a revised setpoint error analysis that provides revised AVs, trip setpoints, and Expanded Tolerances (ETs) for the instrument. These new AVs, trip setpoints,

and ETs establish increased design margin between the nominal trip setpoint and the AV. This increased design margin, combined with historical CC data, provides adequate assurance that the component will remain operable when necessary for the prevention or mitigation of accidents or transients.

The TS requirements that govern operability or routine testing of plant instruments are not assumed to be initiators of any analyzed event because these instruments are intended to prevent, detect, or mitigate accidents. Therefore, these proposed STI changes will not involve an increase in the probability of occurrence of an accident previously evaluated. Additionally, these changes will not increase the consequences of an accident previously evaluated because the proposed changes do not involve any physical changes to plant systems, structures or components (SSCs), or the manner in which these SSCs are operated. These changes will not alter the operation of equipment assumed to be available for the mitigation of anticipated operational occurrences (AOOs) by the plant safety analysis or licensing basis.

The proposed deletion of SR 3.3.1.10 is an administrative change, since the SR will no longer be applicable to any instrument function in DNPS TS Table 3.3.1–1. Therefore, the proposed deletion of SR 3.3.1.10 will not impact the testing, calibration, and inspection of RPS instrumentation that is necessary to assure that the quality of the instrumentation is maintained, that facility operation will be within safety limits, and that the limiting conditions for operation will be met.

For these reasons, the proposed DNPS STI changes do not involve a significant increase in the probability or consequences of an accident previously evaluated.

In summary, the proposed license changes do not involve a significant increase in the probability or consequences of any accident previously evaluated.

2. The proposed changes do not create the possibility of a new or different kind of accident from any accident previously evaluated.

The proposed changes to the DNPS and QCNPS Turbine Condenser Vacuum—Low scram AV and the DNPS CFT and CC STIs do not affect the design, functional performance, or operation of the facility. Similarly, the proposed changes do not affect the design or operation of any SSCs involved in the mitigation of any accidents, nor do they affect the design or operation of any component in the facilities such that new equipment failure modes are created.

No new accident scenarios, transient precursors, failure mechanisms, or limiting single failures are introduced as a result of these changes. There will be no adverse effect or challenges imposed on any safety-related system as a result of these changes.

Therefore, the proposed changes do not create the possibility of a new or different kind of accident from any previously evaluated.

3. The proposed changes do not involve a significant reduction in a margin of safety.

The proposed DNPS and QCNPS AV change does not affect the acceptance criteria for any analyzed event, nor is there a change to any Safety Analysis Limit. There will be no effect on the manner in which safety limits, limiting safety system settings, or limiting conditions for operation are determined nor will there be any effect on those plant systems necessary to assure the accomplishment of protection functions. All required design functions are maintained, and the AVs, are consistent with NRC-approved methodology and guidance for establishment of TS AVs.

The proposed AV changes do not affect the accident analyses that assume operability of the instrument associated with the AV. The Turbine Condenser Vacuum—Low scram function is credited in the Loss of Main Condenser Vacuum AOO. The loss of main condenser AOO event assumes that the main condenser is instantaneously lost while the unit is operating at full power. This is classified as a moderate frequency event and is described in the UFSAR [updated final safety analysis report] as being bounded by the turbine trip with bypass failure event.

The worst case for this AOO would occur if the loss of vacuum were instantaneous. In this case, the loss of main condenser event would be identical to the turbine trip with bypass failure event. During a turbine trip with bypass failure event, the primary system relief valves would remove the majority of the stored heat, while the IC [isolation condenser] at DNPS and RCIC [reactor core isolation cooling] at QCNPS would remove the remaining decay heat. Slower losses of condenser vacuum would produce less severe AOOs, since the turbine stop valves and bypass valves will still be available prior to vacuum levels reaching the nominal trip setpoint for the turbine trip and turbine bypass valve closure scram.

In that the proposed reduction of the Turbine Condenser Vacuum—Low AV is based upon an AL [analytical limit] that is equal to the nominal trip setpoint for the turbine trip, the resulting nominal trip setpoint for the Turbine Condenser Vacuum—Low scram will still be more conservative than the turbine trip setpoint. Therefore, the sequence of events for the loss of main condenser AOO will still result in a reactor scram prior to the turbine trip. Since the proposed change to the Turbine Condenser Vacuum—Low AV will not impact the limiting AOO analysis (i.e., the turbine trip with bypass failure event), the proposed change does not reduce any margin of safety.

Therefore, the proposed AV changes do not involve a significant reduction in the margin of safety.

The proposed DNPS CFT STI change is based on an NRC-approved generic analysis. This analysis concluded that the proposed CFT STI change does not significantly affect the probability of failure or availability of the affected instrumentation systems. Therefore, the proposed DNPS CFT STI change does not affect the accident analyses that assume operability of the instrument associated with the AV.

The proposed DNPS CC STI change is based on a revised setpoint error analysis for the Turbine Condenser Vacuum—Low scram instrument function that provides a revised AV, trip setpoint, and Expanded Tolerance (ET) for the instrument. The new AV, trip setpoint, and ET establish increased design margin between the nominal trip setpoint and the AV. This increased design margin, combined with historical CC data, provides adequate assurance that the component will remain operable when necessary for the prevention or mitigation of accidents or transients. Therefore, the proposed DNPS CFT STI change does not affect the accident analyses that assume operability of the instrument associated with the AV.

Therefore, the proposed changes to extend the DNPS CFT and CC STIs do not involve a significant reduction in the margin of safety.

In summary, the proposed DNPS and QCNPS AV changes and DNPS STI changes do not involve a significant reduction in the margin of safety.

The NRC staff has reviewed the licensee's analysis and, based on this review, it appears that the three standards of 10 CFR 50.92(c) are satisfied. Therefore, the NRC staff proposes to determine that the amendment request involves no significant hazards consideration.

Attorney for licensee: Mr. Bradley J. Fewell, Associate General Counsel, Exelon Generation Company, LLC, 4300 Winfield Road, Warrenville, IL 60555.

NRC Branch Chief: Russell Gibbs.

Exelon Generation Company, LLC, Docket Nos. 50–237 and 50–249, Dresden Nuclear Power Station, Units 2 and 3, Grundy County, Illinois

Date of amendment request: October 9, 2007.

Description of amendment request: The proposed amendment would change the technical specifications (TS) of Dresden Nuclear Power Station (DNPS), Units 2 and 3, consistent with TS Task Force (TSTF) Change Traveler TSTF–423 to the standard TSs boiling water reactor plants, to allow, for some systems, entry into hot shutdown rather than cold shutdown to repair equipment, if risk is assessed and managed consistent with the program in place for complying with the requirements of 10 CFR 50.65(a)(4). Changes proposed herein will be made to the DNPS, Units 2 and 3, TSs for selected Required Action end states providing this allowance.

The NRC staff issued a notice of opportunity for comment in the **Federal Register** on December 14, 2005 (70 FR 74037), on possible license amendments adopting TSTF–423 using the NRC's consolidated line item improvement process (CLIIP) for amending licensee's TSs, which included a model safety evaluation (SE) and model no significant hazards consideration (NSHC) determination. The NRC staff

subsequently issued a notice of availability of the models for referencing in license amendment applications in the **Federal Register** on March 26, 2006 (71 FR 14726), which included the resolution of public comments on the model SE. The licensee affirmed the applicability of the following NSHC determination in its application.

Basis for proposed no significant hazards consideration determination: As required by 10 CFR 50.91(a), an analysis of the issue of NSHC is presented below:

1. The proposed change does not involve a significant increase in the probability or consequences of an accident previously evaluated.

The proposed change allows a change to certain required end states when the TS Completion Times for remaining in power operation will be exceeded. Most of the requested technical specification (TS) changes are to permit an end state of hot shutdown (Mode 3) rather than an end state of cold shutdown (Mode 4) contained in the current TS. The request was limited to: (1) Those end states where entry into the shutdown mode is for a short interval, (2) entry is initiated by inoperability of a single train of equipment or a restriction on a plant operational parameter, unless otherwise stated in the applicable technical specification, and (3) the primary purpose is to correct the initiating condition and return to power operation as soon as is practical. Risk insights from both the qualitative and quantitative risk assessments were used in specific TS assessments. Such assessments are documented in Section 6 of GE NEDC–32988, Revision 2, ''Technical Justification to Support Risk Informed Modification to Selected Required Action End States for BWR Plants.'' They provide an integrated discussion of deterministic and probabilistic issues, focusing on specific technical specifications, which are used to support the proposed TS end state and associated restrictions. The staff finds that the risk insights support the conclusions of the specific TS assessments. Therefore, the probability of an accident previously evaluated is not significantly increased, if at all. The consequences of an accident after adopting proposed TSTF–423, are no different than the consequences of an accident prior to adopting TSTF–423. Therefore, the consequences of an accident previously evaluated are not significantly affected by this change. The addition of a requirement to assess and manage the risk introduced by this change will further minimize possible concerns. Therefore, this change does not involve a significant increase in the probability or consequences of an accident previously evaluated.

2. The proposed change does not create the possibility of a new or different kind of accident from any previously evaluated.

The proposed change does not involve a physical alteration of the plant (no new or different type of equipment will be installed). If risk is assessed and managed, allowing a change to certain required end states when the TS Completion Times for remaining in power operation are exceeded, i.e., entry into hot shutdown rather than cold shutdown to repair equipment, will not introduce new failure modes or effects and will not, in the absence of other unrelated failures, lead to an accident whose consequences exceed the consequences of accidents previously evaluated. The addition of a requirement to assess and manage the risk introduced by this change and the commitment by the licensee to adhere to the guidance in TSTF–IG–05–02, Implementation Guidance for TSTF–423, Revision 0, ''Technical Specifications End States, NEDC–32988–A,'' will further minimize possible concerns. Thus, this change does not create the possibility of a new or different kind of accident from an accident previously evaluated.

3. The proposed change does not involve a significant reduction in the margin of safety.

The proposed change allows, for some systems, entry into hot shutdown rather than cold shutdown to repair equipment, if risk is assessed and managed. The BWROG's risk assessment approach is comprehensive and follows staff guidance as documented in RGs 1.174 and 1.177. In addition, the analyses show that the criteria of the three-tiered approach for allowing TS changes are met. The risk impact of the proposed TS changes was assessed following the three-tiered approach recommended in RG 1.177. A risk assessment was performed to justify the proposed TS changes. The net change to the margin of safety is insignificant. Therefore, this change does not involve a significant reduction in a margin of safety.

The NRC staff proposes to determine that the amendment request involves no significant hazards consideration.

Attorney for licensee: Mr. Bradley J. Fewell, Associate General Counsel, Exelon Generation Company, LLC, 4300 Winfield Road, Warrenville, IL 60555.

NRC Branch Chief: Russell Gibbs.

FPL Energy Duane Arnold, LLC, Docket No. 50–331, Duane Arnold Energy Center, Linn County, Iowa

Date of amendment request: September 14, 2007.

Description of amendment request: Duane Arnold Energy Center requests a proposed change to plant specific technical specifications (TS) 3.3.2.1, ''Control Rod Block Instrumentation,'' to allow the use of the improved Banked Position Withdrawal Sequence (BPWS) during shutdowns in accordance with NEDO–33091–A, Revision 2, ''Improved BPWS Control Rod Insertion Process,'' dated July 2004. The proposed changes are consistent with Nuclear Regulatory Commission (NRC)-approved Industry Technical Specification Task Force (TSTF) Standard Technical Specification Change Traveler, TSTF–476, Revision 1, ''Improved BPWS Control Rod Insertion Process (NEDO–33091).''

Basis for proposed no significant hazards consideration determination: As required by 10 CFR 50.91(a), an analysis of the issue of no-significant-hazards-consideration is presented below:

Criterion 1—The Proposed Change Does Not Involve a Significant Increase in the Probability or Consequences of an Accident Previously Evaluated.

The proposed changes modify the TS to allow the use of the improved banked position withdrawal sequence (BPWS) during shutdowns if the conditions of NEDO–33091–A, Revision 2, ''Improved BPWS Control Rod Insertion Process,'' July 2004, have been satisfied. The staff finds that the licensee's justifications to support the specific TS changes are consistent with the approved topical report and TSTF–476, Revision 1. Since the change only involves changes in control rod sequencing, the probability of an accident previously evaluated is not significantly increased, if at all. The consequences of an accident after adopting TSTF–476 are no different than the consequences of an accident prior to adopting TSTF–476. Therefore, the consequences of an accident previously evaluated are not significantly affected by this change. Therefore, this change does not involve a significant increase in the probability or consequences of an accident previously evaluated.

Criterion 2 —The Proposed Change Does Not Create the Possibility of a New or Different Kind of Accident from any Previously Evaluated.

The proposed change will not introduce new failure modes or effects and will not, in the absence of other unrelated failures, lead to an accident whose consequences exceed the consequences of accidents previously evaluated. The control rod drop accident (CRDA) is the design basis accident for the subject TS changes. This change does not create the possibility of a new or different kind of accident from an accident previously evaluated.

Criterion 3—The Proposed Change Does Not Involve a Significant Reduction in the Margin of Safety.

The proposed change, TSTF–476, Revision 1, incorporates the improved BPWS, previously approved in NEDO–33091–A, into the improved TS. The control rod drop accident (CRDA) is the design basis accident for the subject TS changes. In order to minimize the impact of a CRDA, the BPWS process was developed to minimize control rod reactivity worth for BWR plants. The proposed improved BPWS further simplifies the control rod insertion process, and in order to evaluate it, the

staff followed the guidelines of Standard Review Plan Section 15.4.9, and referred to General Design Criterion 28 of Appendix A to 10 CFR Part 50 as its regulatory requirement. The TSTF stated the improved BPWS provides the following benefits: (1) Allows the plant to reach the all-rods-in condition prior to significant reactor cool down, which reduces the potential for re-criticality as the reactor cools down; (2) reduces the potential for an operator reactivity control error by reducing the total number of control rod manipulations; (3) minimizes the need for manual scrams during plant shutdowns, resulting in less wear on control rod drive (CRD) system components and CRD mechanisms; and, (4) eliminates unnecessary control rod manipulations at low power, resulting in less wear on reactor manual control and CRD system components. The addition of procedural requirements and verifications specified in NEDO–33091–A, along with the proper use of the BPWS will prevent a control rod drop accident (CRDA) from occurring while power is below the low power setpoint (LPSP). The net change to the margin of safety is insignificant. Therefore, this change does not involve a significant reduction in a margin of safety.

Based upon the above discussion of the amendment request, the requested change does not involve a significant hazards consideration.

Attorney for licensee: Marjan Mashhadi, Florida Power & Light Company, 801 Pennsylvania Avenue, Suite 220, Washington, DC 20004.

NRC Acting Branch Chief: Clifford G. Munson.

FPL Energy Point Beach, LLC, Docket Nos. 50–266 and 50–301, Point Beach Nuclear Plant, Units 1 and 2, Town of Two Creeks, Manitowoc County, Wisconsin

Date of amendment request: October 12, 2007.

Description of amendment request: FPL Energy Point Beach, LLC (FPLE–PB) proposes to revise Technical Specification (TS) 5.5.1 5 ''Containment Leakage Rate Testing Program,'' for Units 1 and 2. The proposed change would allow a one-time interval extension of no more than 5 years for the Type A, Integrated Leakage Rate Test (ILRT).

Basis for proposed no significant hazards consideration determination: As required by 10 CFR 50.91(a), the licensee has provided its analysis of the issue of no significant hazards consideration which is presented below:

1. Do the proposed changes involve a significant increase in the probability or consequences of an accident previously evaluated?

Response: No.

This license amendment proposes to revise the Technical Specifications (TS) to allow for the one-time extension of the containment integrated leakage rate test interval from 10 to 15 years. The containment vessel function is to mitigate consequences of an accident. There are no design basis accidents initiated by a failure of the containment leakage mitigation function. The extension of the containment integrated leakage rate test interval will not create an adverse interaction with other systems that could result in initiation of a design basis accident. Therefore, the probability of occurrence of an accident previously evaluated is not significantly increased.

The potential consequences of the proposed change have been quantified by analyzing the changes in risk that would result from extending the containment integrated leakage rate test interval from 10 to 15 years. The increase in risk in terms of person-rem per year within 50 miles resulting from design basis accidents was estimated to be of a magnitude that NUREG–1493 indicates is very small. FPLE–PB has also analyzed the increase in risk in terms of the frequency of large early releases from accidents. The increase in the large early release frequency resulting from the proposed extension was determined to be within the guidelines published in RG 1.I74. Additionally, the proposed change maintains defense-in-depth by preserving a reasonable balance among prevention of core damage, prevention of containment failure, and consequence mitigation. FPLE–PB has determined that the increase in conditional containment failure probability from reducing the containment integrated leakage rate test frequency from one test per 10 years to one test per 15 years would be small.

Continued containment integrity is also assured by the history of successful containment integrated leakage rate tests, and the established programs for local leakage rate testing and IWE inservice inspections which are not affected by the proposed change. Therefore, the probability of occurrence or the consequences of an accident previously analyzed are not significantly increased.

2. Do the proposed changes create the possibility of a new or different kind of accident from any accident previously evaluated?

Response: No.

The proposed change to extend the containment integrated leakage rate test interval from 10 to 15 years does not create any new or different accident initiators or precursors. The length of the containment integrated leakage rate test interval does not affect the manner in which any accident begins. The proposed change does not create any new failure modes for the containment and does not affect the interaction between the containment and any other system. Thus, the proposed changes do not create the possibility of a new or different kind of accident from any previously evaluated.

3. Do the proposed changes involve a significant reduction in a margin of safety?

Response: No.

The risk-based margins of safety associated with the containment integrated leakage rate test are those associated with the estimated person-rem per year, the large early release frequency and the conditional containment failure probability. FPLE–PB has quantified the potential effect of the proposed change on these parameters and determined that the effect is not significant. The non-risk-based margins of safety associated with the containment integrated leakage rate test are those involved with its structural integrity and leak tightness. The proposed change to extend the containment integrated leakage rate test interval from 10 to 15 years does not adversely affect either of these attributes. The proposed change only affects the frequency at which these attributes are verified. Therefore, the proposed change does not involve a significant reduction in margin of safety.

The NRC staff has reviewed the licensee's analysis and, based on this review, it appears that the three standards of 10 CFR 50.92(c) are satisfied. Therefore, the NRC staff proposes to determine that the amendment request involves no significant hazards consideration.

Attorney for licensee: Mr. Antonio Fernandez, Senior Attorney, FPL Energy, LLC, P.O. Box 14000, Juno Beach, FL 33408–0420.

NRC Acting Branch Chief: Cliff Munson.

Nine Mile Point Nuclear Station, LLC, Docket No. 50–410, Nine Mile Point Nuclear Station, Unit No. 2 (NMP2), Oswego County, New York

Date of amendment request: October 22, 2007.

Description of amendment request: The proposed amendment would delete Technical Specification (TS) 3.6.3.1, Primary Containment Hydrogen Recombiners, and references to the hydrogen and oxygen monitors in TS 3.3.3.1, Post Accident Monitoring (PAM) Instrumentation. The proposed TS changes support implementation of the revisions to Title 10 of the *Code of Federal Regulations* (10 CFR) Section 50.44, ''Combustible gas control for nuclear power reactors,'' that became effective on October 16, 2003. These changes are consistent with Nuclear Regulatory Commission (NRC)-approved Revision 1 to TS Task Force (TSTF) Change Traveler, TSTF–447, ''Elimination of Hydrogen Recombiners and Change to Hydrogen and Oxygen Monitors.'' The availability of this TS improvement was announced in the **Federal Register** on September 25, 2003 (68 FR 55416) as part of the consolidated line item improvement process. The licensee affirmed the applicability of the model no significant hazards consideration determination in its application.

The proposed amendment would also relocate, from the Renewed Facility Operating License to the NMP2 Updated Safety Analysis Report, License paragraph 2.C.(11a), *Additional Condition 3,* which requires establishing containment hydrogen monitoring within 90 minutes of initiating emergency core cooling following a loss-of-coolant accident.

Basis for proposed no significant hazards consideration determination: As required by 10 CFR 50.91(a), an analysis of the issue of no significant hazards consideration adopted by the licensee is presented below:

Criterion 1—The Proposed Change Does Not Involve a Significant Increase in the Probability or Consequences of an Accident Previously Evaluated

The revised 10 CFR 50.44 no longer defines a design-basis loss-of-coolant accident (LOCA) hydrogen release, and eliminates requirements for hydrogen control systems to mitigate such a release. The installation of hydrogen recombiners and/or vent and purge systems required by 10 CFR 50.44(b)(3) was intended to address the limited quantity and rate of hydrogen generation that was postulated from a design-basis LOCA. The Commission has found that this hydrogen release is not risk-significant because the design-basis LOCA hydrogen release does not contribute to the conditional probability of a large release up to approximately 24 hours after the onset of core damage. In addition, these systems were ineffective at mitigating hydrogen releases from risk-significant accident sequences that could threaten containment integrity.

With the elimination of the design-basis LOCA hydrogen release, hydrogen [and oxygen] monitors are no longer required to mitigate design-basis accidents and, therefore, the hydrogen monitors do not meet the definition of a safety-related component as defined in 10 CFR 50.2. RG 1.97 Category 1 is intended for key variables that most directly indicate the accomplishment of a safety function for design-basis accident events. The hydrogen [and oxygen] monitors no longer meet the definition of Category 1 in RG 1.97. As part of the rulemaking to revise 10 CFR 50.44 the Commission found that Category 3, as defined in RG 1.97, is an appropriate categorization for the hydrogen monitors because the monitors are required to diagnose the course of beyond design-basis accidents. [Also, as part of the rulemaking to revise 10 CFR 50.44, the Commission found that Category 2, as defined in RG 1.97, is an appropriate categorization for the oxygen monitors, because the monitors are required to verify the status of the inert containment.]

The regulatory requirements for the hydrogen [and oxygen] monitors can be relaxed without degrading the plant emergency response. The emergency response, in this sense, refers to the methodologies used in ascertaining the condition of the reactor core, mitigating the consequences of an accident, assessing and projecting offsite releases of radioactivity, and establishing protective action recommendations to be communicated to offsite authorities. Classification of the hydrogen monitors as Category 3, [classification of the oxygen monitors as Category 2] and removal of the hydrogen [and oxygen] monitors from TS will not prevent an accident management strategy through the use of the SAMGs [severe accident management guidelines], the emergency plan (EP), the emergency operating procedures (EOP), and site survey monitoring that support modification of emergency plan protective action recommendations (PARs).

Therefore, the elimination of the hydrogen recombiner requirements and relaxation of the hydrogen [and oxygen] monitor requirements, including removal of these requirements from TS, does not involve a significant increase in the probability or the consequences of any accident previously evaluated.

Criterion 2—The Proposed Change Does Not Create the Possibility of a New or Different Kind of Accident from Any [Accident] Previously Evaluated

The elimination of the hydrogen recombiner requirements and relaxation of the hydrogen [and oxygen] monitor requirements, including removal of these requirements from TS, will not result in any failure mode not previously analyzed. The hydrogen recombiner and hydrogen [and oxygen] monitor equipment was intended to mitigate a design-basis hydrogen release. The hydrogen recombiner and hydrogen [and oxygen] monitor equipment are not considered accident precursors, nor does their existence or elimination have any adverse impact on the pre-accident state of the reactor core or post accident confinement of radionuclides within the containment building.

Therefore, this change does not create the possibility of a new or different kind of accident from any [accident] previously evaluated.

Criterion 3—The Proposed Change Does Not Involve a Significant Reduction in [a] Margin of Safety

The elimination of the hydrogen recombiner requirements and relaxation of the hydrogen [and oxygen] monitor requirements, including removal of these requirements from TS, in light of existing plant equipment, instrumentation, procedures, and programs that provide effective mitigation of and recovery from reactor accidents, results in a neutral impact to the margin of safety.

The installation of hydrogen recombiners and/or vent and purge systems required by 10 CFR 50.44(b)(3) was intended to address the limited quantity and rate of hydrogen generation that was postulated from a design-basis LOCA. The Commission has found that this hydrogen release is not risk-significant because the design-basis LOCA hydrogen release does not contribute to the conditional probability of a large release up to approximately 24 hours after the onset of core damage.

Category 3 hydrogen monitors are adequate to provide rapid assessment of current reactor core conditions and the direction of degradation while effectively responding to the event in order to mitigate the consequences of the accident. The intent of the requirements established as a result of the TMI, Unit 2 accident can be adequately met without reliance on safety-related hydrogen monitors.

[Category 2 oxygen monitors are adequate to verify the status of an inerted containment.]

Therefore, this change does not involve a significant reduction in [a] margin of safety. [The intent of the requirements established as a result of the TMI, Unit 2 accident can be adequately met without reliance on safety-related oxygen monitors.] Removal of hydrogen [and oxygen] monitoring from TS will not result in a significant reduction in their functionality, reliability, and availability.

The NRC staff has reviewed the analysis adopted by the licensee and, based on this review, it appears that the standards of 10 CFR 50.92(c) are satisfied. Therefore, the NRC staff proposes to determine that the request for amendments involves no significant hazards consideration.

Attorney for licensee: Mark J. Wetterhahn, Esquire, Winston & Strawn, 1700 K Street, NW., Washington, DC 20006.

PSEG Nuclear LLC, Docket No. 50–311, Salem Nuclear Generating Station, Unit No. 2, Salem County, New Jersey

Date of amendment request: October 17, 2007.

Description of amendment request: The proposed amendment would allow a one-time revision to the requirements for fuel decay time prior to commencing movement of irradiated fuel in the

reactor pressure vessel (RPV). Currently, Technical Specification (TS) 3/4.9.3, ''Decay Time'' requires that: (a) The reactor has been subcritical for at least 100 hours prior to movement of irradiated fuel in the RPV between October 15th through May 15th; and (b) the reactor has been subcritical for at least 168 hours prior to movement of irradiated fuel in the RPV between May 16th and October 14th. The calendar approach is based on average river water temperature which is cooler in the fall through spring months. The proposed amendment would revise TS 3/4.9.3 to allow fuel movement to commence at 86 hours after the reactor is subcritical. The proposed change would only be applicable to Salem Nuclear Generating Station, Unit No. 2 refueling outage 2R16, which is scheduled to commence on March 4, 2008.

Basis for proposed no significant hazards consideration determination: As required by 10 CFR 50.91(a), the licensee has provided its analysis of the issue of no significant hazards consideration, which is presented below:

1. Does the change involve a significant increase in the probability [ ] or consequences of an accident previously evaluated?

Response: No.

The proposed license amendment would allow fuel assemblies to be removed from the reactor core and be stored in the Spent Fuel Pool [SFP] in less time after subcriticality than currently allowed by the TSs. Decreasing the decay time of the fuel affects the radionuclide make-up of the fuel to be offloaded as well as the amount of decay heat that is present from the fuel at the time of offload. The accident previously evaluated that is associated with the proposed license amendment is the fuel handling accident [FHA]. Allowing the fuel to be offloaded in less time after subcriticality using actual heat loads does not impact the manner in which the fuel is offloaded. The accident initiator is the dropping of the fuel assembly. Since earlier offload does not affect fuel handling, there is no increase in the probability of occurrence of a [FHA]. The time frame in which the fuel assemblies are moved has been evaluated against the [Title 10 of the Code of Federal Regulations (10 CFR) Section 50.67] dose limits for members of the public, licensee personnel and control room. Additionally, the guidance provided in [Regulatory Guide (RG)] 1.183 was used for the selective application of Alternative Source Term. All dose limits are met with the reduced core offload times; and significant margin is maintained, as the minimum decay time prior to movement of fuel for the FHA analysis is 24 hours.

Therefore, the proposed license amendment does not significantly increase the probability [ ] or the consequences of accidents previously evaluated.

2. [Does the change] [c]reate the possibility of a new or different kind of accident from any accident previously evaluated[?]

Response: No.

The proposed license amendment would allow core offload to occur in less time after subcriticality which affects the radionuclide makeup of the fuel to be offloaded as well as the amount of decay heat that is present from the fuel at the time of offload. The radionuclide makeup of the fuel assemblies and the amount of decay heat produced by the fuel assemblies do not currently initiate any accident. A change in the radionuclide makeup of the fuel at the time of core offload or an increase in the decay heat produced by the fuel being offloaded will not cause the initiation of any accident. The accident previously evaluated that is associated with fuel movement is the [FHA]; no new accidents are introduced. There is no change to the manner in which fuel is being handled or in the equipment used to offload or store the fuel. The effects of the additional decay heat load have been analyzed. The analysis demonstrates that the existing [SFP] cooling system and associated systems under worst-case circumstances would maintain licensing limits and the integrity of the [SFP].

Therefore, the proposed license amendment does not create the possibility of a new or different kind of accident from any accident previously evaluated.

3. Does the change involve a significant reduction in a margin of safety?

Response: No.

The margin of safety pertinent to the proposed changes is the dose consequences resulting from a [FHA]. The shorter decay time prior to fuel movement has been evaluated against 10 CFR 50.67 and all limits continue to be met. All dose limits are met with the reduced core offload times; and significant margin is maintained, as the minimum decay time prior to movement of fuel for the FHA analysis is 24 hours. Decay heat-up calculations performed prior to the refueling outage as part of the IDHM [Integrated Decay Heat Management] program ensure that planned spent fuel transfer to the SFP will not result in maximum SFP temperature exceeding the design basis limit of 149°F (with both heat exchangers available) or 180°F (with one heat exchanger alternating between the two pools). As stated above, the changes in radionuclide makeup and additional heat load do not impact any safety settings and do not cause any safety limit to not be met. In addition, the integrity of the [SFP] is maintained.

The time frame in which the fuel assemblies are moved has been evaluated against the 10 CFR 50.67 dose limits for members of the public, licensee personnel and control room. Additionally, the guidance provided in [RG] 1.183 was used. Calculations performed conclude that expected dose limits following a [FHA] are met with the proposed decay time prior to commencing fuel movement.

Therefore, the proposed changes do not involve a significant reduction in a margin of safety.

The NRC staff has reviewed the licensee's analysis and, based on this review, it appears that the three standards of 10 CFR 50.92(c) are satisfied. Therefore, the NRC staff proposes to determine that the amendment request involves no significant hazards consideration.

Attorney for licensee: Jeffrie J. Keenan, Esquire, Nuclear Business Unit—N21, P.O. Box 236, Hancocks Bridge, NJ 08038.

NRC Branch Chief: Harold K. Chernoff.

Tennessee Valley Authority, Docket Nos. 50–327 and 50–328, Sequoyah Nuclear Plant, Unit Nos. 1 and 2, Hamilton County, Tennessee

Date of amendment request: October 27, 2007.

Description of amendment request: The proposed amendment would modify the Technical Specifications (TSs) to establish more effective and appropriate action, surveillance, and administrative requirements related to ensuring the habitability of the control room envelope (CRE) in accordance with Nuclear Regulatory Commission (NRC)-approved Technical Specification Task Force (TSTF) Standard Technical Specification change traveler TSTF–448, Revision 3, ''Control Room Habitability.'' Specifically, the proposed amendment would modify TS 3.7.7, ''Control Room Emergency Ventilation System,'' and TS Section 6, ''Administrative Controls.'' The NRC staff issued a ''Notice of Availability of Technical Specification Improvement to Modify Requirements Regarding Control Room Envelope Habitability Using the Consolidated Line Item Improvement Process associated with TSTF–448, Revision 3, in the **Federal Register** on January 17, 2007 (72 FR 2022). The notice included a model safety evaluation, a model no significant hazards consideration (NSHC) determination, and a model license amendment request. In its application dated October 27, 2007, Tennessee Valley Authority (the licensee) affirmed the applicability of the model NSHC determination which is presented below.

Basis for proposed no significant hazards consideration determination: As required by 10 CFR 50.91(a), an analysis of the issue of no significant hazards consideration adopted by the licensee is presented below:

Criterion 1—The Proposed Change Does Not Involve a Significant Increase in the Probability or Consequences of an Accident Previously Evaluated.

The proposed change does not adversely affect accident initiators or precursors nor alter the design assumptions, conditions, or configuration of the facility. The proposed change does not alter or prevent the ability

of structures, systems, and components to perform their intended function to mitigate the consequences of an initiating event within the assumed acceptance limits. The proposed change revises the TS for the CRE emergency ventilation system, which is a mitigation system designed to minimize unfiltered air leakage into the CRE and to filter the CRE atmosphere to protect the CRE occupants in the event of accidents previously analyzed. An important part of the CRE emergency ventilation system is the CRE boundary. The CRE emergency ventilation system is not an initiator or precursor to any accident previously evaluated. Therefore, the probability of any accident previously evaluated is not increased. Performing tests to verify the operability of the CRE boundary and implementing a program to assess and maintain CRE habitability ensure that the CRE emergency ventilation system is capable of adequately mitigating radiological consequences to CRE occupants during accident conditions, and that the CRE emergency ventilation system will perform as assumed in the consequence analyses of design basis accidents. Thus, the consequences of any accident previously evaluated are not increased. Therefore, the proposed change does not involve a significant increase in the probability or consequences of an accident previously evaluated.

Criterion 2—The Proposed Change Does Not Create the Possibility of a New or Different Kind of Accident From Any Accident Previously Evaluated.

The proposed change does not impact the accident analysis. The proposed change does not alter the required mitigation capability of the CRE emergency ventilation system, or its functioning during accident conditions as assumed in the licensing basis analyses of design basis accident radiological consequences to CRE occupants. No new or different accidents result from performing the new surveillance or following the new program. The proposed change does not involve a physical alteration of the plant (i.e., no new or different type of equipment will be installed) or a significant change in the methods governing normal plant operation. The proposed change does not alter any safety analysis assumptions and is consistent with current plant operating practice. Therefore, this change does not create the possibility of a new or different kind of accident from any accident previously evaluated.

Criterion 3—The Proposed Change Does Not Involve a Significant Reduction in the Margin of Safety.

The proposed change does not alter the manner in which safety limits, limiting safety system settings or limiting conditions for operation are determined. The proposed change does not affect safety analysis acceptance criteria. The proposed change will not result in plant operation in a configuration outside the design basis for an unacceptable period of time without compensatory measures. The proposed change does not adversely affect systems that respond to safely shut down the plant and to maintain the plant in a safe shutdown condition. Therefore, the proposed change does not involve a significant reduction in a margin of safety.

The NRC staff has reviewed the analysis adopted by the licensee and, based on this review, it appears that the standards of 10 CFR 50.92(c) are satisfied. Therefore, the NRC staff proposes to determine that the request for amendments involves no significant hazards consideration.

Attorney for licensee: General Counsel, Tennessee Valley Authority, 400 West Summit Hill Drive, ET 11A, Knoxville, Tennessee 37902.

NRC Branch Chief: Thomas H. Boyce.

Previously Published Notices of Consideration of Issuance of Amendments to Facility Operating Licenses, Proposed No Significant Hazards Consideration Determination, and Opportunity for a Hearing

The following notices were previously published as separate individual notices. The notice content was the same as above. They were published as individual notices either because time did not allow the Commission to wait for this biweekly notice or because the action involved exigent circumstances. They are repeated here because the biweekly notice lists all amendments issued or proposed to be issued involving no significant hazards consideration.

For details, see the individual notice in the **Federal Register** on the day and page cited. This notice does not extend the notice period of the original notice.

Dominion Nuclear Connecticut, Inc., Docket No. 50–336, Millstone Power Station, Unit No. 2, New London County, Connecticut

Date of amendment request: February 16, 2007.

Brief description of amendment request: The proposed amendment would revise Technical Specification 3/4.4.3, ''Reactor Coolant System, Relief Valves'' to modify the method of testing the pressurizer Power Operated Relief Valves (PORVs). Specifically the requirement for bench testing the valves is changed to accommodate testing of the PORVs while installed in the plant. The change is requested due to the installation of new PORVs that are welded to the piping rather than bolted into the system.

Date of publication of individual notice in Federal Register: November 19, 2007.

Expiration date of individual notice: December 19, 2007 (public comment), January 18, 2008 (hearing requests).

Notice of Issuance of Amendments to Facility Operating Licenses

During the period since publication of the last biweekly notice, the Commission has issued the following amendments. The Commission has determined for each of these amendments that the application complies with the standards and requirements of the Atomic Energy Act of 1954, as amended (the Act), and the Commission's rules and regulations. The Commission has made appropriate findings as required by the Act and the Commission's rules and regulations in 10 CFR Chapter I, which are set forth in the license amendment.

Notice of Consideration of Issuance of Amendment to Facility Operating License, Proposed No Significant Hazards Consideration Determination, and Opportunity for A Hearing in connection with these actions was published in the **Federal Register** as indicated.

Unless otherwise indicated, the Commission has determined that these amendments satisfy the criteria for categorical exclusion in accordance with 10 CFR 51.22. Therefore, pursuant to 10 CFR 51.22(b), no environmental impact statement or environmental assessment need be prepared for these amendments. If the Commission has prepared an environmental assessment under the special circumstances provision in 10 CFR 51.22(b) and has made a determination based on that assessment, it is so indicated.

For further details with respect to the action see (1) the applications for amendment, (2) the amendment, and (3) the Commission's related letter, Safety Evaluation and/or Environmental Assessment as indicated. All of these items are available for public inspection at the Commission's Public Document Room (PDR), located at One White Flint North, Public File Area 01F21, 11555 Rockville Pike (first floor), Rockville, Maryland. Publicly available records will be accessible from the Agencywide Documents Access and Management Systems (ADAMS) Public Electronic Reading Room on the internet at the NRC web site, *http://www.nrc.gov/reading-rm/adams.html*. If you do not have access to ADAMS or if there are problems in accessing the documents located in ADAMS, contact the PDR Reference staff at 1 (800) 397–4209, (301) 415–4737 or by e-mail to *pdr@nrc.gov*.

Duke Power Company LLC, et. al., Docket No. 50–414, Catawba Nuclear Station, Unit 2, York County, South Carolina

Date of application for amendments: April 30, 2007.

Brief description of amendments: The amendment revised Technical Specification (TS) 5.5.9, ''team Generator (SG) Tube Surveillance Program,'' regarding the required SG inspection scope for Catawba Unit 2 during the End of Cycle 15 Refueling Outage and Operating Cycle 16. The changes modified the tube repair criteria for portions of the SG tubes within the hot leg tubesheet region of the SGs.

Date of issuance: October 31, 2007.

Effective date: As of the date of issuance and shall be implemented within 30 days from the date of issuance.

Amendment Nos.: 233.

Renewed Facility Operating License No. NPF–52: Amendments revised the licenses and the technical specifications.

Date of initial notice in Federal Register: August 13, 2007 (72 FR 45272).

The Commission's related evaluation of the amendments is contained in a Safety Evaluation dated October 31, 2007.

No significant hazards consideration comments received: No.

Duke Power Company LLC, et. al., Docket Nos. 50–413 and 50–414, Catawba Nuclear Station, Units 1 and 2, York County, South Carolina

Date of application for amendments: March 29, 2007, as supplemented September 7, 2007, October 9 and October 12, 2007.

Brief description of amendments: The amendments revised the Catawba 1 and 2, Technical Specifications 3.5.2.8, and authorized changes to the updated final safety analysis report concerning modifications to the emergency core cooling system sump.

Date of issuance: November 8, 2007.

Effective date: As of the date of issuance and shall be implemented within 30 days from the date of issuance.

Amendment Nos.: 238, 234.

Facility Operating License Nos. NPF–35 and NPF–52: Amendments revised the licenses and the technical specifications.

Date of initial notice in Federal Register: August 13, 2007 (72 FR 45274). The supplements dated September 7, 2007, October 9, and October 12, 2007, provided additional information that clarified the application, did not expand the scope of the application as originally noticed, and did not change the staff's original proposed no significant hazards consideration determination.

The Commission's related evaluation of the amendments is contained in a Safety Evaluation dated November 8, 2007.

No significant hazards consideration comments received: No.

Duke Power Company LLC, Docket Nos. 50–269, 50–270, and 50–287, Oconee Nuclear Station, Units 1, 2, and 3, Oconee County, South Carolina

Date of application of amendments: November 16, 2006, supplemented May 9 and August 28, 2007.

Brief description of amendments: The amendments authorized revision of the Updated Final Safety Analysis Report to describe the flood protection measures for the auxiliary building.

Date of Issuance: November 14, 2007.

Effective date: As of the date of issuance and shall be implemented within 30 days after completion of the flood protection measures for the auxiliary building.

Amendment Nos.: 357, 359, and 358.

Renewed Facility Operating License Nos. DPR–38, DPR–47, and DPR–55: Amendments revised the licenses.

Date of initial notice in Federal Register: January 3, 2007 (72 FR 151). The supplements dated May 9 and August 28, 2007, provided additional information that clarified the application, did not expand the scope of the application as originally noticed, and did not change the staff's original proposed no significant hazards consideration determination.

The Commission's related evaluation of the amendments is contained in a Safety Evaluation dated November 14, 2007.

No significant hazards consideration comments received: No.

Entergy Gulf States, Inc., and Entergy Operations, Inc., Docket No. 50–458, River Bend Station, Unit 1, West Feliciana Parish, Louisiana

Date of amendment request: July 16, 2007, as supplemented by letter dated August 7, 2007.

Brief description of amendment: The proposed amendment revised the facility operating license (FOL), Paragraph 2.C, and technical specifications (TS) 3.7.2 and TS 5.5 for River Bend Station, Unit 1.

Date of issuance: November 16, 2007.

Effective date: As of the date of issuance and shall be implemented 60 days from the date of issuance.

Amendment No.: 154.

Facility Operating License No. NPF–47: The amendment revised the Facility Operating License and Technical Specifications.

Date of initial notice in Federal Register: September 11, 2007 (72 FR 51857). The supplement dated August 7, 2007, provided additional information that clarified the application, did not expand the scope of the application as originally noticed, and did not change the staff's original proposed no significant hazards consideration determination as published in the **Federal Register** on September 11, 2007 (72 FR 51857). The Commission's related evaluation of the amendment is contained in a Safety Evaluation dated November 16, 2007.

No significant hazards consideration comments received: No.

Exelon Generation Company, LLC, Docket Nos. 50–352 and 50–353, Limerick Generating Station, Units 1 and 2, Montgomery County, Pennsylvania

Date of application for amendment: November 27, 2006, as supplemented by letter dated August 24, 2007.

Brief description of amendment: This amendment revises multiple TSs relating to testing of the Emergency Diesel Generators (EDGs). Specifically, the changes eliminate various accelerated testing requirements, eliminate the EDG test schedule table based on failure rates, relax acceptance criteria associated with the ''fast start'' and load rejection tests and eliminate the EDG failure report.

Date of issuance: November 6, 2007.

Effective date: As of its date of issuance, and shall be implemented within 60 days.

Amendment Nos.: 189 and 150.

Facility Operating License Nos. NPF–39 and NPF–85: This amendment revised the license and Technical Specifications.

Date of initial notice in Federal Register: July 31, 2007 (72 FR 41784).

The Commission's related evaluation of the amendment is contained in a Safety Evaluation dated November 6, 2007.

No significant hazards consideration comments received: No.

FPL Energy Point Beach, LLC, Docket Nos. 50–266 and 50–301, Point Beach Nuclear Plant, Units 1 and 2, Town of Two Creeks, Manitowoc County, Wisconsin

Date of application for amendments: June 29, 2007.

Brief description of amendments: The amendments would modify the Technical Specifications (TSs) 3.7.2, by removing the specific isolation time for the main steam isolation valves from the

associated TS surveillance requirements and by replacing it with the requirement to verify the valve isolation time is within limits.

Date of issuance: November 16, 2007.

Effective date: As of the date of issuance and shall be implemented within 90 days.

Amendment Nos.: 230, 235.

Renewed Facility Operating License Nos. DPR–24 and DPR–27: Amendments revised the Technical Specifications/License.

Date of initial notice in Federal Register: September 11, 2007 (72 FR 51865).

The Commission's related evaluation of the amendments is contained in a Safety Evaluation dated November 16, 2007.

No significant hazards consideration comments received: No.

Nuclear Management Company, LLC, Docket No. 50–263, Monticello Nuclear Generating Plant, Wright County, Minnesota

Date of application for amendment: July 9, 2007.

Brief description of amendment: The amendment revised the Technical Specifications by removing the Table of Contents.

Date of issuance: November 8, 2007.

Effective date: As of the date of issuance and shall be implemented within 60 days.

Amendment No.: 152.

Facility Operating License No. DPR–22.

Amendment revised the Technical Specifications. Date of initial notice in Federal Register: August 14, 2007 (72 FR 45459).

The Commission's related evaluation of the amendment is contained in a Safety Evaluation dated November 8, 2007.

No significant hazards consideration comments received: No.

PSEG Nuclear LLC, Docket Nos. 50–272 and 50–311, SalemNuclear Generating Station, Unit Nos. 1 and 2, Salem County, New Jersey

Date of application for amendments: August 15, 2007, as supplemented on September 6, 2007.

Brief description of amendments: The amendments revise the licensing basis, as described in Appendix 3A of the Salem Updated Final Safety Analysis Report (UFSAR), regarding the method of calculating the net positive suction head available for the emergency core cooling system and containment heat removal system pumps. These changes to the Salem licensing basis relate to issues associated with Generic Letter 2004–02, ''Potential Impact of Debris Blockage on Emergency Recirculation During Design Basis Accidents at Pressurized-Water Reactors.''

Date of issuance: November 15, 2007.

Effective date: As of the date of issuance, to be implemented by December 31, 2007.

Amendment Nos.: 285 and 268.

Facility Operating License Nos. DPR–70 and DPR–75: The amendments revise the UFSAR.

Date of initial notice in Federal Register: September 11, 2007 (72 FR 51866). The letter dated September 6, 2007, provided clarifying information that did not change the initial proposed no significant hazards consideration determination or expand the application beyond the scope of the original **Federal Register** notice.

The Commission's related evaluation of the amendments is contained in a Safety Evaluation dated November 15, 2007.

No significant hazards consideration comments received: No.

Notice of Issuance of Amendments to Facility Operating Licenses and Final Determination of No Significant Hazards Consideration and Opportunity for a Hearing (Exigent Public Announcement or Emergency Circumstances)

During the period since publication of the last biweekly notice, the Commission has issued the following amendments. The Commission has determined for each of these amendments that the application for the amendment complies with the standards and requirements of the Atomic Energy Act of 1954, as amended (the Act), and the Commission's rules and regulations. The Commission has made appropriate findings as required by the Act and the Commission's rules and regulations in 10 CFR Chapter I, which are set forth in the license amendment.

Because of exigent or emergency circumstances associated with the date the amendment was needed, there was not time for the Commission to publish, for public comment before issuance, its usual Notice of Consideration of Issuance of Amendment, Proposed No Significant Hazards Consideration Determination, and Opportunity for a Hearing.

For exigent circumstances, the Commission has either issued a **Federal Register** notice providing opportunity for public comment or has used local media to provide notice to the public in the area surrounding a licensee's facility of the licensee's application and of the Commission's proposed determination of no significant hazards consideration. The Commission has provided a reasonable opportunity for the public to comment, using its best efforts to make available to the public means of communication for the public to respond quickly, and in the case of telephone comments, the comments have been recorded or transcribed as appropriate and the licensee has been informed of the public comments.

In circumstances where failure to act in a timely way would have resulted, for example, in derating or shutdown of a nuclear power plant or in prevention of either resumption of operation or of increase in power output up to the plant's licensed power level, the Commission may not have had an opportunity to provide for public comment on its no significant hazards consideration determination. In such case, the license amendment has been issued without opportunity for comment. If there has been some time for public comment but less than 30 days, the Commission may provide an opportunity for public comment. If comments have been requested, it is so stated. In either event, the State has been consulted by telephone whenever possible.

Under its regulations, the Commission may issue and make an amendment immediately effective, notwithstanding the pendency before it of a request for a hearing from any person, in advance of the holding and completion of any required hearing, where it has determined that no significant hazards consideration is involved.

The Commission has applied the standards of 10 CFR 50.92 and has made a final determination that the amendment involves no significant hazards consideration. The basis for this determination is contained in the documents related to this action. Accordingly, the amendments have been issued and made effective as indicated.

Unless otherwise indicated, the Commission has determined that these amendments satisfy the criteria for categorical exclusion in accordance with 10 CFR 51.22. Therefore, pursuant to 10 CFR 51.22(b), no environmental impact statement or environmental assessment need be prepared for these amendments. If the Commission has prepared an environmental assessment under the special circumstances provision in 10 CFR 51.12(b) and has made a determination based on that assessment, it is so indicated.

For further details with respect to the action, see (1) the application for amendment, (2) the amendment to Facility Operating License, and (3) the

Commission's related letter, Safety Evaluation and/or Environmental Assessment, as indicated. All of these items are available for public inspection at the Commission's Public Document Room (PDR), located at One White Flint North, Public File Area 01F21, 11555 Rockville Pike (first floor), Rockville, Maryland. Publicly available records will be accessible from the Agencywide Documents Access and Management System's (ADAMS) Public Electronic Reading Room on the Internet at the NRC Web site, *http://www.nrc.gov/reading-rm/adams.html.* If you do not have access to ADAMS or if there are problems in accessing the documents located in ADAMS, contact the PDR Reference staff at 1 (800) 397–4209, (301) 415–4737 or by e-mail to *pdr@nrc.gov.*

The Commission is also offering an opportunity for a hearing with respect to the issuance of the amendment. Within 60 days after the date of publication of this notice, person(s) may file a request for a hearing with respect to issuance of the amendment to the subject facility operating license and any person whose interest may be affected by this proceeding and who wishes to participate as a party in the proceeding must file a written request via electronic submission through the NRC E-Filing system for a hearing and a petition for leave to intervene. Requests for a hearing and a petition for leave to intervene shall be filed in accordance with the Commission's ''Rules of Practice for Domestic Licensing Proceedings'' in 10 CFR part 2. Interested person(s) should consult a current copy of 10 CFR 2.309, which is available at the Commission's PDR, located at One White Flint North, Public File Area 01F21, 11555 Rockville Pike (first floor), Rockville, Maryland, and electronically on the Internet at the NRC Web site, *http://www.nrc.gov/reading-rm/doc-collections/cfr/.* If there are problems in accessing the document, contact the PDR Reference staff at 1 (800) 397–4209, (301) 415–4737, or by e-mail to *pdr@nrc.gov.* If a request for a hearing or petition for leave to intervene is filed by the above date, the Commission or a presiding officer designated by the Commission or by the Chief Administrative Judge of the Atomic Safety and Licensing Board Panel, will rule on the request and/or petition; and the Secretary or the Chief Administrative Judge of the Atomic Safety and Licensing Board will issue a notice of a hearing or an appropriate order.

As required by 10 CFR 2.309, a petition for leave to intervene shall set forth with particularity the interest of the petitioner in the proceeding, and how that interest may be affected by the results of the proceeding. The petition should specifically explain the reasons why intervention should be permitted with particular reference to the following general requirements: (1) The name, address, and telephone number of the requestor or petitioner; (2) the nature of the requestor's/petitioner's right under the Act to be made a party to the proceeding; (3) the nature and extent of the requestor's/petitioner's property, financial, or other interest in the proceeding; and (4) the possible effect of any decision or order which may be entered in the proceeding on the requestor's/petitioner's interest. The petition must also identify the specific contentions which the petitioner/requestor seeks to have litigated at the proceeding.

Each contention must consist of a specific statement of the issue of law or fact to be raised or controverted. In addition, the petitioner/requestor shall provide a brief explanation of the bases for the contention and a concise statement of the alleged facts or expert opinion which support the contention and on which the petitioner intends to rely in proving the contention at the hearing. The petitioner must also provide references to those specific sources and documents of which the petitioner is aware and on which the petitioner intends to rely to establish those facts or expert opinion. The petition must include sufficient information to show that a genuine dispute exists with the applicant on a material issue of law or fact.[1] Contentions shall be limited to matters within the scope of the amendment under consideration. The contention must be one which, if proven, would entitle the petitioner to relief. A petitioner/requestor who fails to satisfy these requirements with respect to at least one contention will not be permitted to participate as a party.

Each contention shall be given a separate numeric or alpha designation within one of the following groups:

1. *Technical*—primarily concerns/issues relating to technical and/or health and safety matters discussed or referenced in the applications.

2. *Environmental*—primarily concerns/issues relating to matters discussed or referenced in the environmental analysis for the applications.

3. *Miscellaneous*—does not fall into one of the categories outlined above.

As specified in 10 CFR 2.309, if two or more petitioners/requestors seek to co-sponsor a contention, the petitioners/requestors shall jointly designate a representative who shall have the authority to act for the petitioners/requestors with respect to that contention. If a petitioner/requestor seeks to adopt the contention of another sponsoring petitioner/requestor, the petitioner/requestor who seeks to adopt the contention must either agree that the sponsoring petitioner/requestor shall act as the representative with respect to that contention, or jointly designate with the sponsoring petitioner/requestor a representative who shall have the authority to act for the petitioners/requestors with respect to that contention.

Those permitted to intervene become parties to the proceeding, subject to any limitations in the order granting leave to intervene, and have the opportunity to participate fully in the conduct of the hearing. Since the Commission has made a final determination that the amendment involves no significant hazards consideration, if a hearing is requested, it will not stay the effectiveness of the amendment. Any hearing held would take place while the amendment is in effect.

A request for hearing or a petition for leave to intervene must be filed in accordance with the NRC E-Filing rule, which the NRC promulgated in August 28, 2007, (72 FR 49139). The E-Filing process requires participants to submit and serve documents over the internet or in some cases to mail copies on electronic storage media. Participants may not submit paper copies of their filings unless they seek a waiver in accordance with the procedures described below.

To comply with the procedural requirements of E-Filing, at least five (5) days prior to the filing deadline, the petitioner/requestor must contact the Office of the Secretary by e-mail at *HEARINGDOCKET@NRC.GOV,* or by calling (301) 415–1677, to request (1) a digital ID certificate, which allows the participant (or its counsel or representative) to digitally sign documents and access the E-Submittal server for any proceeding in which it is participating; and/or (2) creation of an electronic docket for the proceeding (even in instances in which the petitioner/requestor (or its counsel or representative) already holds an NRC-issued digital ID certificate). Each petitioner/requestor will need to

[1] To the extent that the applications contain attachments and supporting documents that are not publicly available because they are asserted to contain safeguards or proprietary information, petitioners desiring access to this information should contact the applicant or applicant's counsel and discuss the need for a protective order.

download the Workplace Forms Viewer™ to access the Electronic Information Exchange (EIE), a component of the E-Filing system. The Workplace Forms Viewer™ is free and is available at *http://www.nrc.gov/site-help/e-submittals/install-viewer.html.* Information about applying for a digital ID certificate is available on NRC's public Web site at *http://www.nrc.gov/site-help/e-submittals/apply-certificates.html.*

Once a petitioner/requestor has obtained a digital ID certificate, had a docket created, and downloaded the EIE viewer, it can then submit a request for hearing or petition for leave to intervene. Submissions should be in Portable Document Format (PDF) in accordance with NRC guidance available on the NRC public Web site at *http://www.nrc.gov/site-help/e-submittals.html.* A filing is considered complete at the time the filer submits its documents through EIE. To be timely, an electronic filing must be submitted to the EIE system no later than 11:59 p.m. Eastern Time on the due date. Upon receipt of a transmission, the E-Filing system time-stamps the document and sends the submitter an e-mail notice confirming receipt of the document. The EIE system also distributes an e-mail notice that provides access to the document to the NRC Office of the General Counsel and any others who have advised the Office of the Secretary that they wish to participate in the proceeding, so that the filer need not serve the documents on those participants separately. Therefore, applicants and other participants (or their counsel or representative) must apply for and receive a digital ID certificate before a hearing request/petition to intervene is filed so that they can obtain access to the document via the E-Filing system.

A person filing electronically may seek assistance through the ''Contact Us'' link located on the NRC Web site at *http://www.nrc.gov/site-help/e-submittals.html* or by calling the NRC technical help line, which is available between 8:30 a.m. and 4:15 p.m., Eastern Time, Monday through Friday. The help line number is (800) 397–4209 or locally, (301) 415–4737.

Participants who believe that they have a good cause for not submitting documents electronically must file a motion, in accordance with 10 CFR 2.302(g), with their initial paper filing requesting authorization to continue to submit documents in paper format. Such filings must be submitted by: (1) First class mail addressed to the Office of the Secretary of the Commission, U.S. Nuclear Regulatory Commission, Washington, DC 20555–0001, Attention: Rulemaking and Adjudications Staff; or (2) courier, express mail, or expedited delivery service to the Office of the Secretary, Sixteenth Floor, One White Flint North, 11555 Rockville, Pike, Rockville, Maryland, 20852, *Attention:* Rulemaking and Adjudications Staff. Participants filing a document in this manner are responsible for serving the document on all other participants. Filing is considered complete by first-class mail as of the time of deposit in the mail, or by courier, express mail, or expedited delivery service upon depositing the document with the provider of the service.

Non-timely requests and/or petitions and contentions will not be entertained absent a determination by the Commission, the presiding officer, or the Atomic Safety and Licensing Board that the petition and/or request should be granted and/or the contentions should be admitted, based on a balancing of the factors specified in 10 CFR 2.309(c)(1)(i)-(viii). To be timely, filings must be submitted no later than 11:59 p.m. Eastern Time on the due date.

Documents submitted in adjudicatory proceedings will appear in NRC's electronic hearing docket which is available to the public at *http://ehd.nrc.gov/EHD_Proceeding/home.asp*, unless excluded pursuant to an order of the Commission, an Atomic Safety and Licensing Board, or a Presiding Officer. Participants are requested not to include personal privacy information, such as social security numbers, home addresses, or home phone numbers in their filings. With respect to copyrighted works, except for limited excerpts that serve the purpose of the adjudicatory filings and would constitute a Fair Use application, participants are requested not to include copyrighted materials in their submission.

Virginia Electric and Power Company, et. al., Docket Nos. 50–280 and 50–281, Surry Power Station, Units 1 and 2, Surry County, Virginia

Date of application for amendments: October 22, 2007, as supplemented November 2 and November 9, 2007.

Brief Description of amendments: This amendment adds a new license condition, P.(3), to license Nos. DPR–32 and DPR–37, which authorize the licensee to modify the GOTHIC code as described in the Updated Final Safety Analysis Report (UFSAR) and update the UFSAR as required by 10 CFR 50.71(e).

Date of issuance: November 15, 2007.

Effective date: As of the date of issuance, and shall be implemented within 30 days.

Amendment Nos.: 256, 255.

Renewed Facility Operating License Nos. DPR–32 and DPR–37: Amendments revise the licenses.

Public comments requested as to proposed no significant hazards consideration (NSHC): Yes. The notice provided an opportunity to submit comments (by November 13, 2007) on the Commission(s proposed NSHC determination. No comments have been received. The notice also provided an opportunity to request a hearing (by December 31, 2007), but indicated that if the Commission makes a final NSHC determination, any such hearing would take place after issuance of the amendment. The Commission's related evaluation of the amendment, finding of exigent circumstances, state consultation, and final NSHC determination are contained in a safety evaluation dated November 15, 2007.

Attorney for licensee: Ms. Lillian M. Cuoco, Esq.

NRC Branch Chief: Evangelos C. Marinos.

Dated at Rockville, Maryland, this 23rd day of November, 2007.

For the Nuclear Regulatory Commission.

Catherine Haney,

Director, Division of Operating Reactor Licensing, Office of Nuclear Reactor Regulation.

[FR Doc. E7–23225 Filed 12–3–07; 8:45 am]

BILLING CODE 7590–01–P

UNITED STATES POSTAL SERVICE BOARD OF GOVERNORS

Sunshine Act Meeting

DATE AND TIME: Monday, December 10, 2007, at 11 a.m. and Tuesday, December 11, 2007, at 8:30 a.m. and 10:30 a.m.

PLACE: Washington, DC, at U.S. Postal Service Headquarters, 475 L'Enfant Plaza, SW., in the Benjamin Franklin Room.

STATUS: December 10—11 a.m.—Closed; December 11—8:30 a.m.—Open; December 11—10:30 a.m.—Closed.

MATTERS TO BE CONSIDERED:

Monday, December 10 at 11 a.m. (Closed)

1. Strategic Issues.
2. Financial Update.
3. Product Pricing Update.
4. Global Business Pricing for Customized Agreements.
5. Postal Regulatory Commission Opinion and Recommended Decision in Negotiated Service Agreement with

Bank of America, Docket No. MC2007–1.

6. Labor Update.

7. Personnel Matters and Compensation Issues.

8. Governors' Executive Session—Discussion of prior agenda items and Board Governance.

Tuesday, December 11 at 8:30 a.m. (Open)

1. Minutes of Previous Meeting, November 14–15, 2007.

2. Remarks of the Chairman and Vice Chairman of the Board.

3. Remarks of the Postmaster General and CEO Jack Potter.

4. Holiday Preparations.

5. Committee Reports.

6. Consideration of the Postal Service Fiscal Year 2007 Annual Report.

7. Fiscal Year 2007 Comprehensive Statement on Postal Operations, including Government Performance and Results Act (GPRA) Reporting Requirements.

8. Consideration of Final Fiscal Year 2009 Appropriation Request.

9. Diversity Strategy.

10. Tentative Agenda for the January 29–30, 2008, meeting in Washington, DC.

Tuesday, December 11 at 10:30 a.m. (Closed)—if needed.

1. Continuation of Monday's closed session agenda.

CONTACT PERSON FOR MORE INFORMATION: Wenday A. Hocking, Secretary of the Board, U.S. Postal Service, 475 L'Enfant Plaza, SW., Washington, DC 20260–1000. Telephone (202) 268–4800.

Wendy A. Hocking,

Secretary.

[FR Doc. 07–5945 Filed 11–30–07; 3:56 pm]

BILLING CODE 7710–12–M

SECURITIES AND EXCHANGE COMMISSION

[Release No. 34–56850; File No. SR–Amex–2007–123]

Self-Regulatory Organizations; American Stock Exchange LLC; Notice of Filing and Order Granting Accelerated Approval of a Proposed Rule Change, as Modified by Amendment No.1 Thereto, To Send P/A Orders Through Linkage Prior to the Opening of Trading

November 27, 2007.

Pursuant to Section 19(b)(1) of the Securities Exchange Act of 1934 (''Act'') [1] and Rule 19b–4 thereunder,[2] notice is hereby given that on November 16, 2007, the American Stock Exchange LLC (''Exchange'' or ''Amex'') filed with the Securities and Exchange Commission (''Commission'') the proposed rule change as described in Items I and II below, which items have been substantially prepared by the Amex. On November 26, 2008, the Exchange filed Amendment No. 1 to the proposed rule change. The Commission is publishing this notice to solicit comments on the proposed rule change, as amended, from interested persons and is approving the proposed rule change on an accelerated basis.

I. Self-Regulatory Organization's Statement of the Terms of Substance of the Proposed Rule Change

The Exchange proposes to adopt Commentary .06 to Amex Rule 918 to permit the sending of Principal Acting as Agent Orders (''P/A Orders'') [3] through the Intermarket Options Linkage (''Linkage'') prior to the opening of trading. This proposal would conform Amex Rule 918 to Joint Amendment No. 23 [4] (''Amendment No. 23'') to the Plan for the Purpose of Creating and Operating an Intermarket Options Linkage (the ''Linkage Plan'').[5] The text of the proposed rule change is available at the Amex, at the Commission's Public Reference Room, and at *http://www.amex.com.*

II. Self-Regulatory Organization's Statement of the Purpose of, and Statutory Basis for, the Proposed Rule Change

In its filing with the Commission, the Exchange included statements concerning the purpose of, and basis for, its proposed rule change and discussed any comments it received on the proposed rule change. The text of these statements may be examined at the places specified in Item III below. The Exchange has prepared summaries, set forth in Sections A, B, and C below, of the most significant aspects of such statements.

A. Self-Regulatory Organization's Statement of the Purpose of, and Statutory Basis for, the Proposed Rule Change

1. Purpose

The Amex proposes to adopt Commentary .06 to Amex Rule 918 to amend its rule to conform to Amendment No. 23 to the Linkage Plan. The proposal will permit the use of the Linkage prior to the opening of trading. Prior to the adoption of Amendment No. 23, the Linkage Plan did not comtemplate the use of the Linkage before a Linkage Plan participant (a ''Participant'') opened for trading and disseminated a quotation in an options series. In addition, there was no trade-through protection for opening trades. As a result, if there was a better market away at the time a Plan Participant opens its market, the Amex specialist, responsible both for the opening and for protecting customer orders, could not access that market for a customer. The customer accordingly could receive a price inferior to the national best bid and offer (''NBBO''). This proposal, along with Amendment No. 23 to the Linkage Plan, will permit the sending of P/A Orders prior to the opening, allowing the Amex specialist to access better markets on behalf of customers prior to the Exchange's opening.

In implementing this proposed rule change, the Exchange represented that it will ensure that customers receive the best price for their orders. Under the Linkage Plan, a Participant receiving market has five (5) seconds to respond to a P/A Order, and the Participant receiving market can then reject a response it receives more than five (5) seconds after sending the order. In the unlikely event that the Amex opens its market during this five (5) second period, it is possible that the opening price could differ from the price of an executed P/A Order. In that case, the Amex represented that it will ensure that the specialist provides the customer with the most advantageous price. Therefore, the proposal will only benefit customers by providing them with potential price improvement at the opening.

2. Statutory Basis

The Exchange believes the proposed rule change is consistent with the Act and the rules and regulations under the Act applicable to national securities exchanges and, in particular, the

[1] 15 U.S.C. 78s(b)(l).

[2] 17 CFR 240. 19b–4.

[3] *See* Section 2(16)(a) of the Plan for the Purpose of Creating and Operating an Intermarket Option Linkage (''Linkage Plan'') .

[4] *See* Securities Exchange Act Release No. 56780 (November 13, 2007), 72 FR 65113 (November 19, 2007) (File No. 4–429).

[5] On July 28, 2000, the Commission approved a national market system plan for the purpose of creating and operating an intermarket options market linkage proposed by the Amex, CBOE, and ISE. *See* Securities Exchange Act Release No. 43086 (July 28, 2000), 65 FR 48023 (August 4, 2000). Subsequently, Phlx, Pacific Exchange, Inc. (n/k/a NYSE Arca, Inc.), and BSE joined the Linkage Plan. *See* Securities Exchange Act Release Nos. 43573 (November 16, 2000), 65 FR 70851 (November 28, 2000); 43574 (November 16, 2000), 65 FR 70850 (November 28, 2000); and 49198 (February 5, 2004), 69 FR 7029 (February 12, 2004).

requirements of Section 6(b) of the Act.[6] Specifically, the Exchanges believe the proposed rule change is consistent with the requirements of Section 6(b)(5) of the Act[7] that the rules of an exchange be designed to prevent fraudulent and manipulative acts, to promote just and equitable principles of trade, to remove impediments to and perfect the mechanism of a free and open market and a national market system, and, in general, to protect investors and the public interest.

B. Self-Regulatory Organization's Statement on Burden on Competition

The Exchange believes that the proposed rule change would impose no burden on competition that is not necessary or appropriate in furtherance of the purposes of the Act.

C. Self-Regulatory Organization's Statement on Comments on the Proposed Rule Change Received From Members, Participants or Others

The Exchange has neither solicited nor received comments on this proposal.

III. Solicitation of Comments

Interested persons are invited to submit written data, views, and arguments concerning the foregoing, including whether the proposed rule change is consistent with the Act. Comments may be submitted by any of the following methods:

Electronic Comments

- Use the Commission's Internet comment form (*http://www.sec.gov/rules/sro.shtml*); or
- Send an e-mail to *rule-comments@sec.gov.* Please include File Number SR–Amex–2007–123 on the subject line.

Paper Comments

- Send paper comments in triplicate to Nancy M. Morris, Secretary, Securities and Exchange Commission, 100 F Street, NE., Washington, DC 20549–1090.

All submissions should refer to File Number SR–Amex–2007–123. This file number should be included on the subject line if e-mail is used. To help the Commission process and review your comments more efficiently, please use only one method. The Commission will post all comments on the Commission's Internet Web site (*http://www.sec.gov/rules/sro.shtml*). Copies of the submissions, all subsequent amendments, all written statements with respect to the proposed rule change that are filed with the Commission, and all written communications relating to the proposed rule change between the Commission and any person, other than those that may be withheld from the public in accordance with the provisions of 5 U.S.C. 552, will be available for inspection and copying in the Commission's Public Reference Room, 100 F Street, NE., Washington, DC 20549, on official business days between the hours of 10 a.m. and 3 p.m. Copies of the filings also will be available for inspection and copying at the principal offices of the Exchange. All comments received will be posted without change; the Commission does not edit personal identifying information from submissions. You should submit only information that you wish to make available publicly. All submissions should refer to File No. SR–Amex–2007–123 and should be submitted on or before December 26, 2007.

IV. Commission's Findings and Order Granting Accelerated Approval of Proposed Rule Changes

After careful consideration, the Commission finds that the proposed rule change is consistent with the requirements of the Act and the rules and regulations thereunder, applicable to national securities exchanges.[8] In particular, the Commission finds that the proposal is consistent with the provisions of Section 6(b)(5) of the Act[9] in that it is designed to prevent fraudulent and manipulative acts and practices, to promote just and equitable principles of trade, to remove impediments to and perfect the mechanism of a free and open market and a national market system, and, in general, to protect investors and the public interest. The Commission believes that allowing the Exchange to send P/A Orders to the Linkage prior to the opening should facilitate investors' intermarket access to superior prices.

The Commission finds good cause for approving the proposed rule change before the 30th day after the date of publication of notice of filing thereof in the **Federal Register**. Granting accelerated approval would facilitate the implementation of the proposed rule change in conjunction with Amendment No. 23 to the Linkage Plan.[10] In addition, the Commission notes that the Exchange has committed to ensuring that, for Linkage P/A Orders sent prior to the opening, Amex specialists will provide customers with the most advantageous price in the event that the Amex opens its market while the Exchange is awaiting a response to such a P/A Order. Therefore, the Commission finds good cause, consistent with Section 19(b)(2) of the Act,[11] to approve the proposed rule change on an accelerated basis.

V. Conclusion

It is therefore ordered, pursuant to Section 19(b)(2) of the Act,[12] that the proposed rule change (SR–Amex–2007–123) be, and it hereby is, approved on an accelerated basis.

For the Commission, by the Division of Trading and Markets, pursuant to delegated authority.[13]

Nancy M. Morris,

Secretary.

[FR Doc. E7–23396 Filed 12–3–07; 8:45 am]

BILLING CODE 8011–01–P

[6] 15 U.S.C. 78f(b).

[7] 15 U.S.C. 78f(b)(5).

[8] In approving this proposal, the Commission has considered its impact on efficiency, competition, and capital formation. *See* U.S.C. 78c(f).

[9] 15 U.S.C. 78f(b)(5).

[10] *See supra* note 4.

[11] 15 U.S.C. 78s(b)(2).

[12] 17 CFR 200.30–3(a)(12).

[13] 15 U.S.C. 78s(b)(2).

SECURITIES AND EXCHANGE COMMISSION

[Release No. 34–56852; File No. SR–CBOE–2007–139]

Self-Regulatory Organizations; Chicago Board Options Exchange, Incorporated; Notice of Filing and Immediate Effectiveness of Proposed Rule Change Regarding Fees for Trading on the FLEX Hybrid Trading System

November 28, 2007.

Pursuant to Section 19(b)(1) of the Securities Exchange Act of 1934 (''Act'') [1] and Rule 19b–4 thereunder,[2] notice is hereby given that on November 20, 2007, the Chicago Board Options Exchange, Incorporated (''Exchange'' or ''CBOE'') filed with the Securities and Exchange Commission (''Commission'') the proposed rule change as described in Items I, II, and III below, which Items have been substantially prepared by the Exchange. The Commission is publishing this notice to solicit comments on the proposed rule change from interested persons.

I. Self-Regulatory Organization's Statement of the Terms of Substance of the Proposed Rule Change

The Exchange proposes to amend its Fees Schedule to establish fees

[1] 15 U.S.C. 78s(b)(1).

[2] 17 CFR 240.19b–4.

applicable to trading on the Exchange's FLEX Hybrid Trading System. The text of the proposed rule change is available on the Exchange's Web site (*http://www.cboe.org/legal*), at the Exchange's principal office, and at the Commission's Public Reference Room.

II. Self-Regulatory Organization's Statement of the Purpose of, and Statutory Basis for, the Proposed Rule Change

In its filing with the Commission, the Exchange included statements concerning the purpose of and basis for the proposed rule change and discussed any comments it received on the proposed rule change. The text of these statements may be examined at the places specified in Item IV below. The Exchange has prepared summaries, set forth in Sections A, B, and C below, of the most significant aspects of such statements.

A. Self-Regulatory Organization's Statement of the Purpose of, and Statutory Basis for, the Proposed Rule Change

1. Purpose

On November 15, 2007, the Commission approved Exchange rules that provide for the trading of Flexible Exchange (''FLEX'') options on the Exchange's new FLEX Hybrid Trading System (''CFLEX'').[3] CFLEX is a trading platform that incorporates both open outcry and electronic trading functionality.

The Exchange proposes to amend its Fees Schedule to establish fees applicable to trading on the CFLEX system. First, the Exchange proposes to assess a $0.10 per-contract surcharge fee on all orders (*i.e.*, applicable to all origin codes) executed electronically on the CFLEX system (''CFLEX Surcharge Fee''). The CFLEX Surcharge Fee would be charged only up to the first 2,500 contracts per trade for public customers. The CFLEX Surcharge Fee would assist the Exchange in recouping the cost of developing the CFLEX system.

Second, the Exchange proposes to assess a monthly fee of $100 per log-in ID assigned by the Exchange to each individual member for use in accessing the electronic component of the CFLEX system (''CFLEX Log-in Fee''). The CFLEX Log-in Fee would be charged only up to the first five log-ins per member organization (*i.e.*, the CFLEX Log-in Fee would be capped at $500 per member organization).[4] The CFLEX Log-in Fee would assist the Exchange in offsetting the cost of rolling out and maintaining the CFLEX system.

Lastly, in order to promote the launch of the CFLEX system, the Exchange proposes to waive the CFLEX Surcharge Fee and the CFLEX Log-in Fee beginning with the launch of trading on the CFLEX system through December 31, 2007.

2. Statutory Basis

The Exchange believes that the proposed rule change is consistent with Section 6(b) of the Act[5] in general, and furthers the objectives of Section 6(b)(4) of the Act[6] in particular, in that it is designed to provide for the equitable allocation of reasonable dues, fees, and other charges among its members and other persons using its facilities.

B. Self-Regulatory Organization's Statement on Burden on Competition

The Exchange does not believe that the proposed rule change will impose any burden on competition that is not necessary or appropriate in furtherance of the purposes of the Act.

C. Self-Regulatory Organization's Statement on Comments on the Proposed Rule Change Received From Members, Participants or Others

No written comments were solicited or received with respect to the proposed rule change.

III. Date of Effectiveness of the Proposed Rule Change and Timing for Commission Action

Because the foregoing proposed rule change establishes or changes a due, fee, or other charge imposed by the Exchange, it has become effective upon filing pursuant to Section 19(b)(3)(A) of the Act[7] and Rule 19b–4(f)(2) thereunder.[8] At any time within 60 days of the filing of the proposed rule change, the Commission may summarily abrogate such rule change if it appears to the Commission that such action is necessary or appropriate in the public interest, for the protection of investors, or otherwise in furtherance of the purposes of the Act.

IV. Solicitation of Comments

Interested persons are invited to submit written data, views, and arguments concerning the foregoing, including whether the proposed rule change is consistent with the Act. Comments may be submitted by any of the following methods:

Electronic Comments

- Use the Commission's Internet comment form (*http://www.sec.gov/rules/sro.shtml*); or
- Send an e-mail to *rule-comments@sec.gov.* Please include File No. SR–CBOE–2007–139 on the subject line.

Paper Comments

- Send paper comments in triplicate to Nancy M. Morris, Secretary, Securities and Exchange Commission, 100 F Street, NE., Washington, DC 20549–1090.

All submissions should refer to File Number SR–CBOE–2007–139. This file number should be included on the subject line if e-mail is used. To help the Commission process and review your comments more efficiently, please use only one method. The Commission will post all comments on the Commissions Internet Web site (*http://www.sec.gov/rules/sro.shtml*). Copies of the submission, all subsequent amendments, all written statements with respect to the proposed rule change that are filed with the Commission, and all written communications relating to the proposed rule change between the Commission and any person, other than those that may be withheld from the public in accordance with the provisions of 5 U.S.C. 552, will be available for inspection and copying in the Commission's Public Reference Room, 100 F Street, NE., Washington, DC 20549, on official business days between the hours of 10 a.m. and 3 p.m. Copies of such filing also will be available for inspection and copying at the principal office of the CBOE. All comments received will be posted without change; the Commission does not edit personal identifying information from submissions. You should submit only information that you wish to make available publicly. All submissions should refer to File Number SR–CBOE–2007–139 and should be submitted on or before December 26, 2007.

For the Commission, by the Division of Trading and Markets, pursuant to delegated authority.[9]

Nancy M. Morris,

Secretary.

[FR Doc. E7–23399 Filed 12–3–07; 8:45 am]

BILLING CODE 8011–01–P

[3] *See* Securities Exchange Act Release No. 56792 (November 15, 2007), 72 FR 65776 (November 23, 2007) (SR–CBOE–2006–99).

[4] For purposes of the CFLEX Log-in Fee, ''member organization'' means the member organization with which the individual member is affiliated.

[5] 15 U.S.C. 78f(b).

[6] 15 U.S.C. 78f(b)(4).

[7] 15 U.S.C. 78s(b)(3)(A).

[8] 17 CFR 19b–4(f)(2).

[9] 17 CFR 200.30–3(a)(12).

SECURITIES AND EXCHANGE COMMISSION

[Release No. 34–56825; File No. SR–NASDAQ–2007–066]

Self-Regulatory Organizations; The NASDAQ Stock Market LLC; Notice of Filing and Immediate Effectiveness of Proposed Rule Change To Clarify the Applicability to Limited Partnerships of Nasdaq's Direct Registration Program Requirements

November 20, 2007.

Pursuant to Section 19(b)(1) of the Securities Exchange Act of 1934 (''Act''),[1] notice is hereby given that on July 12, 2007, NASDAQ Stock Market LLC (''Nasdaq'') filed with the Securities and Exchange Commission (''Commission'') the proposed rule change described in Items I, II, and III below, which items have been prepared primarily by Nasdaq. The Commission is publishing this notice to solicit comments on the proposed rule change from interested parties.

I. Self-Regulatory Organization's Statement of the Terms of Substance of the Proposed Rule Change

Nasdaq proposes to clarify that the requirement that all issuers be eligible to participate in the Direct Registration Program (''DRS'') also applies to issuers that are limited partnerships. The text of the proposed rule change is below.[2]

4360. Qualitative Listing Requirements for Nasdaq Issuers That Are Limited Partnerships

(a)–(i) No Change.

(j) Each issuer that is a limited partnership must comply with the requirements to be eligible for a Direct Registration Program, as described in Rule 4350(l).

* * * * *

II. Self-Regulatory Organization's Statement of the Purpose of, and Statutory Basis for, the Proposed Rule Change

In its filing with the Commission, Nasdaq included statements concerning the purpose of and basis for the proposed rule change and discussed any comments it received on the proposed rule change. The text of these statements may be examined at the places specified in Item IV below. Nasdaq has prepared summaries, set forth in sections (A), (B), and (C) below, of the most significant aspects of these statements.[3]

A. Self-Regulatory Organization's Statement of the Purpose of, and Statutory Basis for, the Proposed Rule Change

1. Purpose

In August 2006, the Commission approved changes to Nasdaq Rule 4350(l) to require that Nasdaq-listed securities be eligible to participate in a direct registration program.[4] This requirement is currently applicable to newly listing companies and on January 1, 2008, will be fully implemented when all Nasdaq-listed securities will be required to be eligible. In proposing this requirement, Nasdaq intended that the requirement apply to all listed securities except non-equity securities which are book-entry-only.[5] However, Rule 4350 does not apply to Nasdaq issuers that are limited partnerships. This filing addresses that oversight by adopting in Rule 4360, which does apply to limited partnerships, the requirement that each issuer be eligible for DRS, as described in Rule 4350(l).

2. Statutory Basis

Nasdaq believes that the proposed rule change is consistent with the requirements of Section 6 of the Act[6] in general and particularly with Section 6(b)(5) of the Act[7] in that it is designed to promote just and equitable principles of trade, to foster cooperation and coordination with persons engaged in regulating, clearing, settling, processing information with respect to, and facilitating transaction in securities, to remove impediments to and perfect the mechanism of a free and open market and a national market system, and, in general, to protect investors and the public interest and is not designed to permit unfair discrimination between customers, issuers, brokers, or dealers. Nasdaq believes that requiring securities to be eligible to use DRS will make it easier to trade securities in book-entry form, which will facilitate the settlement of securities transactions.

B. Self-Regulatory Organization's Statement on Burden on Competition

Nasdaq does not believe that the proposed rule change will impose any burden on competition that is not necessary or appropriate in furtherance of the purposes of the Act.

C. Self-Regulatory Organization's Statement on Comments on the Proposed Rule Change Received From Members, Participants, or Others

No written comments relating to the proposed rule change have been solicited or received. Nasdaq will notify the Commission of any written comments received by Nasdaq.

III. Date of Effectiveness of the Proposed Rule Change and Timing for Commission Action

The foregoing rule change has become effective upon filing pursuant to Section 19(b)(3)(A)(iii) of the Act[8] and Rule 19b–4(f)(6)[9] thereunder in that it (1) does not significantly affect the protection of investors or the public interest; (ii) does not impose any significant burden on competition; (iii) by its terms, does not become operative for 30 days after the date of the filing. As such, this proposed rule change is effective upon the Commission's receipt of this filing pursuant to Section 19(b)(3) and rule 19b–4(f)(6) thereunder. At any time within sixty days of the filing of such rule change, the Commission may summarily abrogate such rule change if it appears to the Commission that such action is necessary or appropriate in the public interest, for the protection of investors, or otherwise in furtherance of the purposes of the Act.

IV. Solicitation of Comments

Interested persons are invited to submit written data, views, and arguments concerning the foregoing, including whether the proposed rule change is consistent with the Act. Comments may be submitted by any of the following methods:

Electronic Comments

- Use the Commission's Internet comment form (*http://www.sec.gov/rules/sro.shtml*) or
- Send an e-mail to *rule-comments@sec.gov.* Please include File Number SR–NASDAQ–2007–066 on the subject line.

[1] 15 U.S.C. 78s(b)(1).

[2] Changes are to the rule text that appears in the electronic manual of Nasdaq found at *http://www.complinet.com/nasdaq.*

[3] The Commission has modified the text of the summaries prepared by the Nasdaq.

[4] Securities Exchange Act Release No. 54288 (August 8, 2007), 71 FR 47276 (August 16, 2007) [File No. SR–NASDAQ–2006–008] (order approving listing standards requiring DRS eligibility) (''Approval Order'').

[5] The Approval Order states, ''In order to reduce the number of transactions in securities for which settlement is effected by the physical delivery of securities certificates and thereby reduce the risks, costs, and delays associated with the physical delivery of securities certificates, Nasdaq is proposing to add new Section (l) to its rule 4350 to require that all listed securities be eligible to participate in DRS.''

[6] 15 U.S.C. 78o–3.

[7] 15 U.S.C. 78o–3(b)(6).

[8] 15 U.S.C. 78s(b)(3)(A)(iii).

[9] 17 CFR 240.19b–4(f)(6).

Paper Comments

• Send paper comments in triplicate to Nancy M. Morris, Secretary, Securities and Exchange Commission, 100 F Street, NE., Washington, DC 20549–1090.

All submissions should refer to File Number SR–Nasdaq–2007–066. This file number should be included on the subject line if e-mail is used. To help the Commission process and review your comments more efficiently, please use only one method. The Commission will post all comments on the Commission's Internet Web site (*http://www.sec.gov/rules/sro.shtml*). Copies of the submission, all subsequent amendments, all written statements with respect to the proposed rule change that are filed with the Commission, and all written communications relating to the proposed rule change between the Commission and any person, other than those that may be withheld from the public in accordance with the provisions of 5 U.S.C. 552, will be available for inspection and copying in the Commission's Public Reference Room, 100 F Street, NE., Washington, DC 20549, on official business days between the hours of 10 a.m. and 3 p.m. Copies of such filings also will be available for inspection and copying at the principal office of Nasdaq and on Nasdaq's Web site, *http://www.complinet.com/nasdaq.* All comments received will be posted without change; the Commission does not edit personal identifying information from submissions. You should submit only information that you wish to make available publicly. All submissions should refer to File Number SR–NASDAQ–2007–066 and should be submitted on or before December 26, 2007.

For the Commission by the Division of Trading and Markets, pursuant to delegated authority.[10]

Nancy M. Morris,

Secretary.

[FR Doc. E7–23397 Filed 12–3–07; 8:45 am]

BILLING CODE 8011–01–P

[10] 17 CFR 200.30–3(a)(12).

SMALL BUSINESS ADMINISTRATION

Reporting and Recordkeeping Requirements Under OMB Review

AGENCY: Small Business Administration.

ACTION: Notice of reporting requirements submitted for OMB review.

SUMMARY: Under the provisions of the Paperwork Reduction Act (44 U.S.C. Chapter 35), agencies are required to submit proposed reporting and recordkeeping requirements to OMB for review and approval, and to publish a notice in the **Federal Register** notifying the public that the agency has made such a submission.

DATES: Submit comments on or before January 3, 2008. If you intend to comment but cannot prepare comments promptly, please advise the OMB Reviewer and the Agency Clearance Officer before the deadline.

Copies: Request for clearance (OMB 83–1), supporting statement, and other documents submitted to OMB for review may be obtained from the Agency Clearance Officer.

ADDRESSES: Address all comments concerning this notice to: Agency Clearance Officer, Jacqueline White, Small Business Administration, 409 3rd Street, SW., 5th Floor, Washington, DC 20416; and OMB Reviewer, Office of Information and Regulatory Affairs, Office of Management and Budget, New Executive Office Building, Washington, DC 20503.

FOR FURTHER INFORMATION CONTACT: Jacqueline White, Agency Clearance Officer, (202) 205–7044.

SUPPLEMENTARY INFORMATION:

Title: SBA Express and Patriot Express Information.

No: 1919, 1920SX, A, B, C, 2237, 2238.

Frequency: On Occasion.

Description of Respondents: Small Business Clients.

Responses: 68,923.

Annual Burden: 60,308.

Jacqueline White,

Chief, Administrative Information Branch.

[FR Doc. E7–23404 Filed 12–3–07; 8:45 am]

BILLING CODE 8025–01–P

SMALL BUSINESS ADMINISTRATION

[Disaster Declaration #11079 and #11080]

California Disaster Number CA–00074

AGENCY: U.S. Small Business Administration.

ACTION: Amendment 1.

SUMMARY: This is an amendment of the Presidential declaration of a major disaster for the State of California (FEMA–1731–DR), dated 10/24/2007.

Incident: Wildfires.

Incident Period: 10/21/2007 and Continuing.

Effective Date: 11/20/2007.

Physical Loan Application Deadline Date: 01/09/2008.

EIDL Loan Application Deadline Date: 07/24/2008.

ADDRESSES: Submit completed loan applications to: U.S. Small Business Administration, Processing and Disbursement Center, 14925 Kingsport Road, Fort Worth, TX 76155.

FOR FURTHER INFORMATION CONTACT: A. Escobar, Office of Disaster Assistance, U.S. Small Business Administration, 409 3rd Street, SW., Suite 6050, Washington, DC 20416.

SUPPLEMENTARY INFORMATION: The notice of the President's major disaster declaration for the State of California, dated 10/24/2007 is hereby amended to extend the deadline for filing applications for physical damages as a result of this disaster to 01/09/2008.

All other information in the original declaration remains unchanged.

(Catalog of Federal Domestic Assistance Numbers 59002 and 59008).

James E. Rivera,

Acting Associate Administrator for Disaster Assistance.

[FR Doc. E7–23486 Filed 12–3–07; 8:45 am]

BILLING CODE 8025–01–P

DEPARTMENT OF TRANSPORTATION

Federal Aviation Administration

Fuel Flowmeters Technical Standard Order TSO–C44d Revision

AGENCY: Federal Aviation Administration, DOT.

ACTION: Notice of availability and request for public comment.

SUMMARY: The TSO tells manufacturers seeking TSO authorization or letter of design approval (LODA) what minimum performance standards (MPS) their Fuel Flowmeter must first meet for approval and identification with the applicable TSO markings. This notice announces the cancellation of TSO–C44c, and request public comments on the proposed revision (TSO–C44d) to the cancelled TSO–C44c.

DATES: Comments must be received on or before January 3, 2008.

ADDRESSES: Send all comments on the proposed revision TSO–44d to: Federal Aviation Administration, Aircraft Certification Service, Aircraft Engineering Division, Room 815, 800 Independence Avenue, SW., Washington, DC 20591. ATTN: Jim Kabbara, AIR–120. You may deliver comments to: Federal Aviation Administration, Room 815, 800 Independence Avenue, SW., Washington, DC, 20591, or electronically submit comments to the following Internet address: *9–AWA–AVR–AIR–TSO44d–Comments@faa.gov.*

Include in the subject line of your electronic message the following: Comments FAA TSO–44d, Fuel Flowmeter Technical Standard Order.

FOR FURTHER INFORMATION CONTACT: Jim Kabbara, Aerospace Engineer, Federal Aviation Administration, Aircraft Certification Service, Aircraft Engineering Division, Technical Programs and Continued Airworthiness Branch, AIR–120, Room 815, 800 Independence Avenue, SW., Washington, DC 20591. Telephone (202) 267–8001, FAX (202) 267–5340, or e-mail at: *jim.kabbara@faa.gov.*

SUPPLEMENTARY INFORMATION:

Comments Invited

You are invited to comment on the draft order listed in this notice by sending such written data, views, or arguments to the above listed address. Please identify ''FAA TSO–44d, Fuel Flowmeter Technical Standard Order'' as the subject of your comments. You may also examine comments received on the proposed TSO–C44d before and after the comment closing date at the FAA Headquarters Building, Room 815, 800 Independence Avenue, SW., Washington, DC 20591, weekdays except Federal holidays, between 8:30 a.m. and 4:30 p.m. The Director of the Aircraft Certification Service will consider all communications received on or before the closing date before implementing the revision.

Background

The failure condition specified in TSO–C44c, Paragraph 3.b., was incorrectly identified as ''*hazardous.*'' The proposed revision offered by this **Federal Register** Notice revises Paragraph 3.b. to state the following: ''Develop each fuel Flowmeter to at least the design assurance level equal to the failure condition classification of the system on which the Flowmeter is to be installed.'' The proposed draft changes no other MPS requirement of TSO–C44.

How To Obtain Copies

You may get an electronic copy via the Internet at *http://www.faa.gov/certification/aircraft/DraftDoc/Comments.htm* or request a hard copy by contacting the person named in the paragraph **FOR FURTHER INFORMATION CONTACT**.

Issued in Washington, DC, on November 27, 2007.

Carol Martineau,

Acting Assistant Manager, Aircraft Engineering Division, Aircraft Certification Service.

[FR Doc. 07–5915 Filed 12–3–07; 8:45 am]

BILLING CODE 4910–13–M

DEPARTMENT OF TRANSPORTATION

Maritime Administration

[MARAD 2007 0016]

Information Collection Available for Public Comments and Recommendations

ACTION: Notice and request for comments.

SUMMARY: In accordance with the Paperwork Reduction Act of 1995, this notice announces the Maritime Administration's (MARAD) intention to request the Office of Management and Budget's (OMB) approval for a new information collection related to MARAD's marine transportation economic impact model data needs.

DATES: Comments should be submitted on or before February 4, 2008.

FOR FURTHER INFORMATION CONTACT: Wassel Mashagbeh, Maritime Administration, MAR–700, 1200 New Jersey Avenue, SE., Washington, DC 20590. Telephone: (202) 366–1715 or E-Mail: *wassel.mashagbeh@dot.gov*. Copies of this collection can also be obtained from that office.

SUPPLEMENTARY INFORMATION:

Title of Collection: MARAD's Marine Transportation Economic Impact Model Data Needs.

Type of Request: New Collection.

OMB Control Number: 2133-New.

Form Numbers: MA–1051, MA–1052.

Expiration Date of Approval: Three years from date of approval by the Office of Management and Budget.

Summary of Collection of Information: This collection will provide current marine transportation system operational data for MARAD's Marine Transportation Economic Impact Model that is not available through other means. The model uses information collected through surveys of the maritime operating areas to develop a profile of the industry. Since the last survey in 1999, significant increases in fuel, surface transportation, and security costs have occurred, as well as the introduction of new information and environmental technologies that have substantially affected marine transportation system operations.

Need and Use of the Information: MARAD's Marine Transportation Economic Impact Model is designed to explore and quantify the economic contribution of the nation's marine industry to our national economy, such as output, employment, and tax receipts. The information to be collected will provide the basis to calculate the impacts on other surface transportation modes (i.e., rail and truck) should marine transportation become unavailable in any given region. The last detailed collection of information occurred in 1999 during the development of the MARAD Port Kit. The agency is now proposing to update marine terminal and vessel operator cost information that has substantially changed since the last collection. Collecting up-to-date information is essential to ensure that the model accurately depicts the current economic environment of the U.S. maritime industry. No secondary sources of this information are readily available.

Description of Respondents: The target population for the survey will be approximately 100 U.S. vessel and marine terminal operating companies.

Annual Responses: 56.

Annual Burden: 17.5.

Comments: Comments should refer to the docket number that appears at the top of this document. Written comments may be submitted to the Docket Clerk, U.S. DOT Dockets, Room W12–140, 1200 New Jersey Avenue, SE., Washington, DC 20590. Comments also may be submitted by electronic means via the Internet at *http://www.regulations.gov*. Specifically address whether this information collection is necessary for proper performance of the functions of the agency and will have practical utility, accuracy of the burden estimates, ways to minimize this burden, and ways to enhance the quality, utility, and clarity of the information to be collected. All comments received will be available for examination at the above address between 10 a.m. and 5 p.m. *EDT (or EST),* Monday through Friday, except Federal Holidays. An electronic version of this document is available on the World Wide Web at *http://www.regulations.gov*.

Privacy Act: Anyone is able to search the electronic form of all comments received into any of our dockets by the name of the individual submitting the comment (or signing the comment, if submitted on behalf of an association, business, labor union, etc.). You may review DOT's complete Privacy Act Statement in the **Federal Register** published on April 11, 2000 (Volume 65, Number 70; Pages 19477–78) or you may visit *http://www.regulations.gov*.

Authority: 49 CFR 1.66.

By Order of the Maritime Administrator.

Dated: November 26, 2007.

Christine S. Gurland,

Acting Secretary, Maritime Administration.

[FR Doc. E7–23474 Filed 12–3–07; 8:45 am]

BILLING CODE 4910–81–P

DEPARTMENT OF TRANSPORTATION

Maritime Administration

[MARAD 2007 0017]

Requested Administrative Waiver of the Coastwise Trade Laws

AGENCY: Maritime Administration, Department of Transportation.

ACTION: Invitation for public comments on a requested administrative waiver of the Coastwise Trade Laws for the vessel ASPIRE.

SUMMARY: As authorized by Public Law 105–383 and Public Law 107–295, the Secretary of Transportation, as represented by the Maritime Administration (MARAD), is authorized to grant waivers of the U.S.-build requirement of the coastwise laws under certain circumstances. A request for such a waiver has been received by MARAD. The vessel, and a brief description of the proposed service, is listed below. The complete application is given in DOT docket MARAD–2007–0017 at *http://www.regulations.gov*. Interested parties may comment on the effect this action may have on U.S. vessel builders or businesses in the U.S. that use U.S.-flag vessels. If MARAD determines, in accordance with Public Law 105–383 and MARAD's regulations at 46 CFR part 388 (68 FR 23084; April 30, 2003), that the issuance of the waiver will have an unduly adverse effect on a U.S.-vessel builder or a business that uses U.S.-flag vessels in that business, a waiver will not be granted. Comments should refer to the docket number of this notice and the vessel name in order for MARAD to properly consider the comments. Comments should also state the commenter's interest in the waiver application, and address the waiver criteria given in § 388.4 of MARAD's regulations at 46 CFR part 388.

DATES: Submit comments on or before January 3, 2008.

ADDRESSES: Comments should refer to docket number MARAD–2007–0017. Written comments may be submitted by hand or by mail to the Docket Clerk, U.S. Department of Transportation, Docket Operations, M–30, West Building Ground Floor, Room W12–140, 1200 New Jersey Avenue, SE., Washington, DC 20590. You may also send comments electronically via the Internet at *http://www.regulations.gov.* All comments will become part of this docket and will be available for inspection and copying at the above address between 10 a.m. and 5 p.m., E.T., Monday through Friday, except federal holidays. An electronic version of this document and all documents entered into this docket is available on the World Wide Web at *http://www.regulations.gov*.

FOR FURTHER INFORMATION CONTACT: Joann Spittle, U.S. Department of Transportation, Maritime Administration, 1200 New Jersey Avenue, SE., Room W21–203, Washington, DC 20590. Telephone 202–366–5979.

SUPPLEMENTARY INFORMATION: As described by the applicant the intended service of the vessel ASPIRE is:

Intended Use: ''To use for charter for my own clients.''

Geographic Region: ''MA, RI, CT, NY, NJ, DE, DC, MD, VA, FL.''

Privacy Act

Anyone is able to search the electronic form of all comments received into any of our dockets by the name of the individual submitting the comment (or signing the comment, if submitted on behalf of an association, business, labor union, etc.). You may review DOT's complete Privacy Act Statement in the **Federal Register** published on April 11, 2000 (Volume 65, Number 70; Pages 19477–78).

Dated: November 26, 2007.

By order of the Maritime Administrator.

Christine Gurland,

Acting Secretary, Maritime Administration.

[FR Doc. E7–23472 Filed 12–3–07; 8:45 am]

BILLING CODE 4910–81–P

DEPARTMENT OF TRANSPORTATION

National Highway Traffic Safety Administration

[NHTSA Docket No. NHTSA–2007–0025]

Meeting Notice

AGENCY: National Highway Traffic Safety Administration (NHTSA), DOT.

ACTION: Meeting notice.

SUMMARY: NHTSA announces a meeting of the Federal Interagency Committee on Emergency Medical Services (FICEMS) to be held in Washington, DC. This notice announces the date, time and location of the meeting, which will be open to the public.

DATES: The meeting will be held on December 18, 2007, from 1 p.m. to 3 p.m.

ADDRESSES: The meeting will be held at the U.S. Department of Transportation (DOT) 1200 New Jersey Avenue, SE., Conference Room # 6, Main Floor, West Wing, Washington, DC 20590.

FOR FURTHER INFORMATION CONTACT: Drew Dawson, Director, Office of Emergency Medical Services, National Highway Traffic Safety Administration, 1200 New Jersey Avenue, SE., NTI–140, Washington, DC 20590, Telephone number (202) 366–9966; E-mail *Drew.Dawson@dot.gov.*

SUPPLEMENTARY INFORMATION: Section 10202 of the Safe, Accountable, Flexible, Efficient Transportation Equity Act: A Legacy For Users (SAFETEA–LU), Pub. L. 109–59, provided that the FICEMS consist of several officials from Federal agencies as well as a State emergency medical services director appointed by the Secretary of Transportation. SAFETEA–LU directed the Administrator of NHTSA, in cooperation with the Administrator of the Health Resources and Services Administration of the Department of Health and Human Services and the Director of the Preparedness Division, Directorate of Emergency Preparedness and Response of the Department of Homeland Security, to provide administrative support to the Interagency Committee, including scheduling meetings, setting agendas, keeping minutes and records, and producing reports.

This meeting of the FICEMS will focus on addressing the requirements of SAFETEA–LU and the opportunities for collaboration among the key Federal agencies involved in emergency medical services. The agenda will include:

- Consideration of the FICEMS Technical Working Group report and recommendations.
- Evidence-based Practice Guidelines.
- National EMS Assessment.

This meeting will be open to the public. Individuals wishing to register must provide their name, affiliation, phone number, and e-mail address to Drew Dawson by e-mail at *Drew.Dawson@dot.gov* or by telephone at (202) 366–9966 no later than December 12, 2007. Pre-registration is necessary to comply with security procedures. Picture I.D. must also be provided to enter the DOT Building and it is suggested that visitors arrive 30 minutes early in order to facilitate entry. The Visitor entrance is on the New Jersey Avenue side of the building.

Minutes of the FICEMS Meeting will be available to the public online through the DOT Document Management System (DMS) at: *http://dms.dot.gov* under the docket number listed at the beginning of this notice.

Issued on: November 29, 2007.

Marilena Amoni,

Associate Administrator for Research & Program Development.

[FR Doc. E7–23471 Filed 12–3–07; 8:45 am]

BILLING CODE 4910–59–P

DEPARTMENT OF TRANSPORTATION

Surface Transportation Board

[STB Finance Docket No. 35088]

Iowa, Chicago & Eastern Railroad Corporation—Acquisition Exemption—Line of BNSF Railway Company

AGENCY: Surface Transportation Board, DOT.

ACTION: Notice of exemption.

SUMMARY: The Board grants an exemption, under 49 U.S.C. 10502, from the prior approval requirements of 49 U.S.C. 10902 for the acquisition by Iowa, Chicago & Eastern Railroad Corporation (IC&E), a Class II rail carrier, of approximately 18.5 miles of rail line owned by BNSF Railway Company (BNSF), a Class I rail carrier, extending from a connection with another BNSF line at milepost 1.74 near East Moline, IL, to the end of the line at milepost 20.31 at Ceffco, IL, near Albany, IL, subject to the labor protection required by 49 U.S.C. 10902(d), including a 60-day notice requirement.

DATES: The exemption will be effective on December 28, 2007. Petitions to stay must be filed by December 14, 2007. Petitions to reopen must be filed by December 21, 2007.

ADDRESSES: An original and 10 copies of all pleadings, referring to STB Finance Docket No. 35088, must be filed with the Surface Transportation Board, 395 E Street, SW., Washington, DC 20423–0001. In addition, one copy of all pleadings must be served on petitioner's representatives: William C. Sippel and Thomas J. Litwiler, Fletcher & Sippel LLC, 29 North Wacker Drive, Suite 920, Chicago, IL 60606–2832.

FOR FURTHER INFORMATION CONTACT: Melissa Ziembicki, (202) 245–0386. [Assistance for the hearing impaired is available through the Federal Information Relay Service (FIRS) at 1–800–877–8339.]

SUPPLEMENTARY INFORMATION: Additional information is contained in the Board's decision. To purchase a copy of the full decision, write to, e-mail, or call: ASAP Document Solutions, 9332 Annapolis Rd., Suite 103, Lanham, MD 20706; e-mail: *asapdc@verizon.net;* telephone: (202) 306–4004. [Assistance for the hearing impaired is available through FIRS at 1–800–877–8339.]

Board decisions and notices are available on our Web site at *http://www.stb.dot.gov.*

Decided: November 28, 2007.

By the Board, Chairman Nottingham, Vice Chairman Buttrey, and Commissioner Mulvey.

Vernon A. Williams,

Secretary.

[FR Doc. E7–23465 Filed 12–3–07; 8:45 am]

BILLING CODE 4915–01–P

DEPARTMENT OF THE TREASURY

United States Mint

Notification of United States Mint Coin Product Price Adjustment

ACTION: Notification of United States Mint Coin Product Price Adjustment.

SUMMARY: The United States Mint is announcing the price of the 2008 American Eagle Silver Proof Coin.

Because of increases in the cost of silver, the United States Mint will begin accepting orders for the 2008 American Eagle Silver Proof Coin at the price indicated below, effective December 3, 2007:

Product	2007 price	New 2008 coin price
American Eagle Silver Proof Coin	$ 29.95	$ 31.95

FOR FURTHER INFORMATION CONTACT: Gloria C. Eskridge, Associate Director for Sales and Marketing; United States Mint; 801 Ninth Street, NW.; Washington, DC 20220; or call 202–354–7500.

Authority: 31 U.S.C. 5111, 5112 & 9701.

Dated: November 28, 2007.

Edmund C. Moy,

Director, United States Mint.

[FR Doc. E7–23487 Filed 12–3–07; 8:45 am]

BILLING CODE 4810–02–P

Federal Register

Tuesday,
December 4, 2007

Part II

Department of Transportation

National Highway Traffic Safety Administration

49 CFR Parts 564 and 571

Federal Motor Vehicle Safety Standards; Lamps, Reflective Devices, and Associated Equipment; Final Rule

DEPARTMENT OF TRANSPORTATION

National Highway Traffic Safety Administration

49 CFR Parts 564 and 571

Docket No. NHTSA–2007–28322

RIN 2127–AJ75

Federal Motor Vehicle Safety Standards; Lamps, Reflective Devices, and Associated Equipment

AGENCY: National Highway Traffic Safety Administration (NHTSA), Department of Transportation.

ACTION: Final Rule.

SUMMARY: This document amends the Federal Motor Vehicle Safety Standard (FMVSS) No. 108 on lamps, reflective devices, and associated equipment by reorganizing the regulatory text so that it provides a more straightforward and logical presentation of the applicable regulatory requirements, which includes the agency's interpretation of the existing requirements. It also greatly reduces the need to consult relevant third-party standards by including applicable requirements directly into the main body of Standard No. 108, rather than incorporating such provisions by reference. This final rule does not impose any new substantive requirements on manufacturers.

In addition, this document amends 49 CFR Part 564, *Replaceable Light Source Information,* by adding a newly created Appendix C, which relocates figures addressing sealed beam headlamps that currently reside in FMVSS No. 108 and a relevant Society of Automotive Engineers (SAE) standard there. We believe few lighting manufacturers still produce sealed beam headlamps, and their diminishing use is unlikely to draw new manufacturers of this type of lamp. Accordingly, we see no drawbacks to consolidating the information regarding sealed beam light sources with other light source information currently located in 49 CFR Part 564.

DATES: *Effective date:* The final rule is effective September 1, 2008 with voluntary early compliance permitted immediately. The incorporation by reference of certain publications listed in the rule is approved by the Director of the Federal Register as of September 1, 2008. *Petitions for reconsideration:* Petitions for reconsideration of this final rule must be received not later than January 18, 2008.

ADDRESSES: Any petitions for reconsideration should refer to the docket number of this document and be submitted to: Administrator, National Highway Traffic Safety Administration, 1200 New Jersey Avenue, SE., West Building, Ground Floor, Docket Room W12–140, Washington, DC 20590.

FOR FURTHER INFORMATION CONTACT: For technical issues: David Hines, Office of Crash Avoidance Standards (NVS–121), NHTSA, 1200 New Jersey Avenue, SE., West Building, Washington, DC 20590 (Telephone: (202) 493–0245) (Fax: (202) 366–7002).

For legal issues: Ari Scott, Office of the Chief Counsel (NCC–112), NHTSA, 1200 New Jersey Avenue, SE., West Building, Washington, DC 20590 (Telephone: (202) 366–2992) (Fax: (202) 366–3820).

SUPPLEMENTARY INFORMATION:

Table of Contents

I. Executive Summary
II. Background
A. Historical Overview of the Standard
B. The Need for an Administrative Rewrite of the Standard
III. December 2005 Notice of Proposed Rulemaking (NPRM) and Public Comments
A. The NPRM
B. Discussion of Public Comments Received in Response to the NPRM and Their Impact on the Final Rule
(a) 49 CFR Part 564
(b) 49 CFR Part 571.108
1. Administrative Considerations
2. Omissions, Typographical Errors, and Inconsistent Language
3. Organization of the Standard
4. Suggestions Beyond the Scope of the Rewrite
5. Suggestions Within the Scope of the Rewrite
IV. The Final Rule
A. 49 CFR Part 564
B. 49 CFR Part 571.108
V. Benefits and Costs
VI. Rulemaking Analyses and Notices
Appendix A: FMVSS No. 108 Rewrite Cross Reference
Appendix B: FMVSS No. 108 Rewrite Cross Reference
Appendix C: List of figures

I. Executive Summary

After carefully considering the public comments on its December 2005 proposal, the agency has decided to adopt a final rule amending Federal Motor Vehicle Safety Standard (FMVSS) No. 108, *Lamps, Reflective Devices, and Associated Equipment,* by reorganizing the regulatory text and directly importing requirements from applicable SAE standards currently incorporated by reference into the regulatory text. In doing so, the agency has decided to make some changes from the NPRM, including modifying the organizational structure of the standard, relocating test procedures and performance requirements from attached tables to the regulatory text, and incorporating the substance of several additional interpretations into the standard. In addition, three SAE documents that the agency had proposed to continue to be incorporated by reference in the NPRM have now been integrated into the regulatory text, and the location of marking requirements within the standard has been further consolidated.

Consistent with the NPRM, the final rule also establishes an Appendix C in 49 CFR Part 564, *Replaceable Light Source Information,* as a repository for dimensional and electrical information associated with standardized sealed beam headlamps that currently resides in figures in FMVSS No. 108.

These modifications have furthered the objective of this rewrite by increasing clarity as follows: (1) Making requirements easier to find and comprehend; (2) presenting performance requirements and test procedures together through the inclusion of relevant provisions of third-party documents (previously incorporated by reference) directly into the regulatory text of the standard; and (3) updating Standard No. 108 to reflect significant letters of interpretation. The rewrite of FMVSS No. 108 is considered administrative in nature because the standard's existing requirements and obligations are not being increased, decreased, or substantively modified. Accordingly, costs associated with manufacturer compliance with Standard No. 108 are not expected to change as a result of this regulatory action.

II. Background

A. Historical Overview of the Standard

On December 30, 2005, NHTSA published a notice of proposed rulemaking [1] (NPRM) to amend FMVSS No. 108, *Lamps, Reflective Devices, and Associated Equipment,* by reorganizing the regulatory text so that it provides a more straight-forward and logical presentation of the applicable regulatory requirements. The initial version of FMVSS No. 108 was adopted almost 40 years ago to increase motor vehicle safety by establishing minimum requirements for vehicle lighting, reflective devices, and associated equipment. In developing the standard, NHTSA incorporated requirements from a number of industry consensus standards, in particular SAE standards. At that time, motor vehicle technologies were relatively simple, as compared to today's designs. For example, motor vehicle headlighting systems were limited to ones consisting of either two

[1] 70 Fr 77454, (Dec. 30, 2005) (Docket No. NHTSA–2006–23634–3).

7-inch or four 5¾-inch round sealed beam units. During the ensuing years, a number of rectangular sealed beam units, replaceable bulb headlamps, and integral beam headlamps were developed, and FMVSS No. 108 was amended to permit the use of these new technologies. Later, the standard was further amended to add requirements for high-mounted stop lamps, side marker lamps, and side reflex reflectors, to allow for daytime running lamps, and to address the conspicuity needs of large vehicles.

However, such amendments were made on *an ad* hoc basis, which, over time, resulted in a patchwork organization for FMVSS No. 108. Furthermore, when regulated parties had questions regarding how FMVSS No. 108 should be interpreted (in many instances due to rapid advances in lighting technology not fully anticipated or addressed by the existing regulatory text), they submitted requests for interpretation to the agency on specific issues. Since its promulgation, a large number of interpretation letters have been issued pertaining to Standard No. 108. Thus, in its current state, FMVSS No. 108 has requirements that are located directly in its regulatory text, located in referenced and sub-referenced SAE standards, and elaborated upon in various agency interpretations. Since its inception, NHTSA has never completed a thorough reorganization of the entire standard.

B. The Need for an Administrative Rewrite of the Standard

Due to concerns about being able to locate requirements efficiently and the apparent lack of clarity associated with the standard (as demonstrated by an abundance of letters of interpretation), we decided to undertake an administrative rewrite of FMVSS No. 108. The agency has also received complaints that the current text of FMVSS No. 108 sometimes results in confusion, in part due to the way it is organized. Regulated parties have stated that the current organization of FMVSS No. 108 makes it difficult for them, at times, to be fully confident that all applicable requirements have been identified and satisfied prior to certification to the standard. Also, numerous interested parties have stated that the large number of interpretations that have been issued by the agency regarding Standard No. 108 make it difficult to locate and identify the agency's position on relevant issues. In addition, regulated parties have conveyed to the agency in recent years that some of the older versions of SAE standards incorporated by reference into FMVSS No. 108 are no longer readily available from SAE International.

Throughout the past few decades, SAE has published revised, successor versions, with differing requirements, for many of their standards incorporated by reference into FMVSS No. 108. This appears to sometimes cause confusion on the part of regulated parties who, mistakenly, may believe that the most recent version of a SAE standard represents the regulatory requirement. The agency believes that interested parties should have easy access to the requirements of the standard, and, therefore, we believe there is value in publishing, without substantive change, applicable requirements that are currently contained in third-party documents directly within FMVSS No. 108 itself. The same logic applies to our decision to include the results of relevant legal interpretations in the standard. Furthermore, several provisions currently in Standard No. 108 refer to regulatory inception dates that are several years in the past, so the agency is eliminating text citing such past dates.

For these reasons, we believe that the benefits of an administrative rewrite of FMVSS No. 108 (e.g., making the standard more navigable and thereby facilitating compliance with existing requirements) justify the necessary commitment of agency resources to accomplish this reorganization of the standard.

III. December 2005 Notice of Proposed Rulemaking (NPRM) and Public Comments

A. The NPRM

As noted above, NHTSA published a NPRM on December 30, 2005 that proposed to reorganize FMVSS No. 108 to improve the clarity of the standard's requirements, thereby increasing its utility for interested parties. This administrative rewrite attempted to make the standard more understandable by adopting a simplified numbering scheme, to improve organization by grouping related materials in a more logical and consistent sequence, and to reduce reliance on references to third-party documents. As proposed, the reorganized standard progressed from vehicle-level requirements to device-level requirements, beginning with the most common requirements and then proceeding to exceptions.

The NPRM also proposed to move figures addressing sealed beam headlamps that are currently included in FMVSS No. 108 and SAE J1383 APR85, *Performance Requirements for Motor Vehicle Headlamps,* into 49 CFR Part 564, *Replaceable Light Source Information,* as a newly created Appendix C. This modification would be consistent with the current practice of placing replaceable light source information in Part 564. The title of Part 564 would also be changed to ''*Replaceable Light Source and Sealed Beam Headlamp Information*'' to reflect the addition of the sealed beam headlamp content.

Whereas Standard No. 108 currently references approximately 35 different SAE documents in nearly 100 separate instances, the NPRM proposed reducing that number to eight documents, which were ones believed not to be routinely used by regulated parties. Accordingly, the NPRM proposed to incorporate the content of these frequently used SAE documents directly into the regulatory text and/or attached tables of Standard No. 108.

The proposed tables included Table I, which listed the required lamps and reflective devices for the various vehicles regulated by FMVSS No. 108. The number of required lamps and reflective devices, their color, their mounting locations and height above the road surface, and their manner of activation were included in Table I, which resembles an expanded version of Tables I through IV of the current FMVSS No. 108. Table II detailed the requirements for the four different kinds of headlighting systems permitted by the standard. Table III contained the conspicuity system requirements for large trucks and trailers, while Tables IV and V provided, respectively, effective projected luminous lens area requirements and visibility requirements. Tables VI through XII and XIV through XX listed photometric requirements for individual lamp types. Table XIII detailed the target locations for license plate lamp photometry. Table XXI contained test procedures and performance requirements for all associated devices. Finally Tables XXII and XXIII contained non-photometry test procedures and performance requirements for all lamps, reflective devices, replaceable light sources, and vehicle headlamp aiming devices (VHAD). In addition, several new figures were included to clarify some of the application requirements for conspicuity systems.

From a regulatory perspective, it was the agency's intention, as expressed in the NPRM, that the administrative rewrite of Standard No. 108 would neither result in any current obligation being diminished, nor any new obligation being imposed. In other words, the substantive requirements are identical to those of the current version

of FMVSS No. 108, including incorporated documents. Therefore, we do not believe that vehicle manufacturers and lighting manufacturers would have to make any changes to their respective products or production processes if the NPRM were made final.

B. Public Comments Received in Response to the NPRM

The agency received comments from twenty seven entities in response to the December 2005 NPRM, which were submitted by 11 lamp or lamp component manufacturers, 11 manufacturer or user associations, three vehicle manufacturers, and two test organizations. Commenters included: Truck Manufacturers Association (TMA), Motorcycle Industry Council (MIC), Koito Manufacturing Co., Ltd., (Koito), Truck Trailer Manufacturers Association (TTMA), General Electric Automotive Plastics (GE-Plastics), General Motors North America (GM), Specialty Equipment Market Association (SEMA), Grote Industries, L.L.C., (Grote), Innovative Lighting, Inc., Calcoast Industrial Testing Laboratory (Calcoast), General Electric Automotive Lighting (GE), Valeo Sylvania, L.L.C. (VS), Guide Corporation (Guide), Alliance of Automobile Manufacturers (AAM), 3M Traffic Safety Systems (3M), Valeo Lighting Systems (Valeo), Association of International Automobile Manufacturers (AIAM), Owner-Operator Independent Drivers Association, Inc. (OOIDA), Atlas Material Testing Solutions (Atlas), American Trucking Associations, Inc. (ATA), Honda Motor Co., LTD. (Honda), Nissan North America, Inc., (Nissan), and Bayer Material Science, L.L.C., (Bayer). A joint response was submitted by Motor and Equipment Manufacturers Association (MEMA), Transportation Safety Equipment Institute (TSEI), and Motor Vehicle Lighting Council (MVLC), collectively the Associations (ASSN). Several months after the comment closing date the Associations submitted a supplementary response which was shortly followed by another supplementary response in conjunction with the Alliance (AAM/ASSN). All comments are available in Docket No. NHTSA–2006–23634 and were considered in the promulgation of this final rule.

The comments about the NPRM that we received can be divided into five general categories: (1) Administrative Considerations; (2) Omissions, Typographical Errors, and Inconsistent Language; (3) Organizational Structure; (4) Suggestions Beyond the Scope of the Rewrite; and (5) Suggestions Within the Scope of the Rewrite. A summary and analysis of each issue identified is provided below.

(a) 49 CFR Part 564

We received only one substantive comment concerning the relocation of the sealed beam headlamp figures into a new Appendix C of Part 564 of this chapter. GE requested a separate NPRM for this purpose and that the drawings that would be filed in Appendix C be made available for review.

We stated in *Summary of the Proposal* in the NPRM that the final rule adopting the rewrite of Standard No. 108 would occur concurrently with the relocation of the sealed beam figures to Appendix C of Part 564. We also provided, at the end of that notice, a complete listing of all the figures and where they currently reside in FMVSS No. 108 or SAE J1383 APR85, which is incorporated by reference in the current version of FMVSS No. 108, but we did not provide specific regulatory text for Appendix C in the NPRM. Ample opportunity was provided for public comment on this issue, so we are making the establishment of Appendix C of Part 564 of this chapter and the transfer of the identified figures to it part of the final rule. We believe that it would be beneficial for the sealed beam drawings to be relocated as part of this reorganization so that applicable requirements are transferred in an accurate manner, thereby satisfying our commitment not to change the existing requirements of the standard.

(b) 49 CFR 571.108

1. Administrative Considerations

Some of the comments submitted in response to the NPRM were not focused upon the substance of the rewrite but rather addressed administrative concerns. Several commenters requested statements of reassurance that ''* * * no substantive changes from existing requirements are intended,'' and ''* * * state that the existing body of interpretations is still valid.'' On these points, we clarify as follows. First we reiterate that the administrative rewrite, as expressed in this final rule, does not make any substantive changes to the requirements of Standard No. 108. Furthermore, as stated in the NPRM, not all letters of interpretation were appropriate for inclusion into the regulatory language of FMVSS No. 108. Generally, we excluded those that we concluded did not add value to the regulatory text (i.e., one without broad applicability). However, all existing letters of interpretation, whether or not they are specifically integrated into the FMVSS No. 108 final rule, continue to reflect the legal opinion of the agency unless they contradict the explicit regulatory text of the standard or were overturned by subsequent interpretations.

AAM suggested that the final rule should not be mandatory until September 1st, one year after publication of the final rule. We have established September 1, 2008 as the mandatory compliance date, with voluntary early compliance permitted immediately.

ATA, OOIDA, and TMA all expressed concern about conflicts between FMVSS No. 108 and the regulations of the Federal Motor Carrier Safety Administration (FMCSA). They requested that the rewrite of Standard No. 108 reconcile the differences that they perceive between it and the regulations of the FMCSA.

The FMCSA has established regulations for lamps, reflective devices, and associated equipment for commercial vehicles in use and a few specialized types of commercial vehicles at time of manufacture. The FMCSA made significant revisions to its lighting regulations in 2005 [2] and some substantive differences do exist between the lighting regulations of FMCSA and FMVSS No. 108. These differences may have the potential to cause manufacturers of lamps and reflective devices that fall under the jurisdiction of both NHTSA and FMCSA to pursue different design, manufacturing, and compliance processes to satisfy the regulations of both agencies. However, any attempt at reconciliation here would be outside the scope of the rewrite process. Recently, FMCSA issued a final rule [3] in response to a petition for reconsideration to its August 15, 2005 final rule, which resolved the differences between its regulations and FMVSS No. 108, as interpreted in NHTSA's July 28, 2005 interpretation to Mr. Clarke,[4] concerning auxiliary lamps mounted near identification lamps. Regulated parties may want to consider other approaches to address the remaining differences between FMVSS No. 108 and 49 CFR Part 393. One such approach could be to submit rulemaking petitions to NHTSA and FMSCA requesting reconciliation of the differences between FMVSS No. 108 and 49 CFR Part 393.

[2] See 49 CFR Part 393, as last revised by 70 FR 48008 August 15, 2005 (Docket No. FMCSA–1997–2364–44).

[3] 72 CFR 32011 (June 11, 2007) (Docket No. FMCSA 1997–2364).

[4] *http://isearch.nhtsa.gov/files/GF002551.3.html.*

2. Omissions, Typographical Errors, and Inconsistent Language

Given the complexity of the proposed administrative rewrite of FMVSS No. 108, including the integration of the content of numerous SAE standards incorporated by reference into the regulatory text, some omissions and typographical errors occurred. Numerous comments were received identifying such occurrences. Accordingly, we have amended the regulatory text of the final rule to correct these errors.

Some respondents have noted instances where they believe that the language of the regulatory text used in the NPRM was not faithful to the language and intent of the current FMVSS No. 108. In many instances where a claim of unfaithful language was made in the comments, the agency adopted a conservative approach, choosing to revise the language of the NPRM back to that of the original document in the final rule. Where such a revision was not made, we have stated our reasons for that decision.

Two rather significant instances where contradictory regulatory language was found to exist in the current version of FMVSS No. 108 and its incorporated documents are discussed here. One has to do with the appropriate photometric requirement for a specific type of replaceable bulb headlamp and is discussed in detail in the section devoted to Table II. The other concerns the ratio between the stop lamp function and the taillamp function in a lamp where those functions are optically combined. The discussion related to Table IX contains an explanation of this issue. Both instances bolster our opinion that regulatory requirements should be stated once and only once in a document. Neither instance has ever generated an interpretation request nor did many respondents raise either issue in their comments to the docket. This reinforces our belief that, notwithstanding the existence of ambiguous regulatory language, the intent of the specific requirements was clear.

Because correction of either situation would require a substantive change to FMVSS No. 108, we have decided to refrain from addressing these examples now. However, we may issue a notice of correction in the near future to address what we believe are mistakes and inconsistencies that have existed for some time in Standard No. 108.

3. Organization of the Standard

The organizational structure of the reorganized standard, as presented in the NPRM, progressed from vehicle-level requirements to device-level requirements, beginning with the most common requirements and then proceeding to exceptions. Requirements in the rewrite of FMVSS No. 108 are consolidated into dedicated paragraphs. Paragraphs S1 through S4 were organized in the same manner as the present standard. S4, *Definitions*, was expanded to incorporate relevant definitions from the applicable SAE standards previously incorporated as part of Standard No. 108. Paragraph S5 addressed the remaining references to SAE standards. Vehicle-level requirements were located in paragraph S6, including requirements by vehicle type. Following that, requirements were organized with dedicated sections for each type of lamp and reflective device, beginning with signal lamps, reflective devices and associated equipment under paragraph S7, and headlamp and headlighting requirements under paragraphs S8 through S13, and S16 through S18. Paragraph S14 addressed aimability performance requirements, while paragraph S15 contained requirements for replaceable light sources (including references to Part 564). In order to make requirements easier to find, a Table of Contents was added as an appendix to the standard.

The most detailed comments about the organizational structure of the standard were those in the supplementary response from the ASSN/AAM, which recommended a significantly different organizational structure that would divide the content of FMVSS No. 108 into four sections. Under the ASSN/AAM structure, the first section would contain general and specific lamp requirements, and the second section would consist of Tables I, II, III, VI, VII, VIII, IX, X, XI, XII, XIV, XV, XVI (split into three separate tables), XVII, XVIII, XIX, and XX. However, there would be some format changes to lamp photometry tables and the addition of graphical illustrations of photometric test points. These commenters similarly suggested three new tables that would graphically illustrate the required photometric test points, lines, and areas associated with upper beam headlamps, lower beam mechanically aimed headlamps, and lower beam visually/optically aimed headlamps. The third section would contain all the figures of the NPRM as well as Table XIII, *License Plate Lamp Target Locations*, redesigned as Figure 19. The fourth section would be subdivided into five annexes which would contain photometric test procedures and the physical test procedures of Tables XXI, XXII, and XXIII.

ASSN/AAM also suggested dividing Table I into five separate tables: one for vehicles less than 80 in (2032 mm) in overall width, another for vehicles 80 in (2032 mm) or more in overall width, one for trailers, one for motorcycles, and one for school buses. The activation requirements would be removed from these tables and located in a new paragraph titled ''*Electrical*.'' Tables IV and V covering projected luminous lens area and visibility would be eliminated and their requirements dispersed to the applicable individual lamp sections. These individual lamp sections would have a common format divided into 14 subsections representing specific requirements. An additional table would be created that would contain all marking requirements.

In consideration of the comments submitted by ASSN/AAM, we have decided to make significant changes to the structure of the standard presented in the NPRM. These structural changes include: (1) Relocating test procedures and performance requirements that were primarily contained in paragraph S6.8 and Tables XXI, XXII, and XXIII of the proposal, to paragraph S14 of the final rule; (2) expanding and standardizing the presentation of requirements in individual lamp and reflective device sections of the final rule beyond that of the proposal; (3) including the provisions from additional SAE documents, incorporated by reference in the proposal, in the regulatory text of the final rule; and (4) further consolidating the location of marking requirements in the final rule beyond that of the proposal.

We believe there is value in adopting a structure in the final rule that is easy for regulated parties to navigate. There were some aspects of the ASSN/AAM recommended structure that we did not adopt due to our effort to avoid redundancies, streamline the standard, and avoid adding new material not currently contained in Standard No. 108, including graphs, which could cause confusion. We believe that our approach in modifying the structure of the NPRM will collectively provide the most value to all end-users.

We have decided to adopt the ASSN/AAM recommendation regarding reorganization of the layout of several photometry requirement tables for reasons that follow. Standard No. 108 provides two alternative methods for demonstrating the photometric compliance of turn signal lamps, taillamps, stop lamps, backup lamps, parking lamps, and high-mounted stop lamps. For these lamps compliance can

be demonstrated by achieving a minimum photometric intensity at each of 18 to 22 discrete test points distributed within a pattern about 20° high and 40° wide centered about the H–V axis.[5] Alternatively, FMVSS No. 108 also permits these specific lamps to demonstrate compliance by meeting a minimum photometric intensity for groups of these test points. Individual test points in proximity to each other are organized into groups consisting of from two to six points. The minimum photometric intensity requirement of each group is approximately (but not always exactly) the arithmetic sum of the minimum photometric intensities of all included points. This allows a lamp where one or more test point(s) in a group do not meet their individual minimum values to be compliant provided the remaining test points in the group exceed their minimum values by enough to allow the group total to exceed the group requirement.[6] Turn signal lamps, taillamps, stop lamps, and parking lamps have five groups of test points; while backup lamps have six groups, and high-mounted stop lamps have four groups.

Tables VI, VII, VIII, IX, XII, XV, which detail photometry requirements for those lamps permitted to use both the individual test point and the grouped test point compliance methods, are formatted such that test points are organized in group order. Progressing from left to right horizontally, each test point group is identified by number, and then the individual test points included within that group are identified by their vertical and horizontal positions. Next, the minimum photometric intensity for each individual test point is shown, and finally, at the right end, the group minimum photometric intensity is shown.

In contrast, the photometry requirements tables suggested by the ASSN/AAM, and endorsed by Calcoast, organize the lamp test points in a vertical, then horizontal, manner that requires the user to search for each point to include in a group and then consult a sub-table to find out the minimum photometric requirement for that group. We find this suggested approach unnecessarily complex and prone to increasing, not decreasing, the possibility of error in determining photometric requirements. Therefore, we have decided to retain the format of the photometric tables as presented in the NPRM with one simplification, which was to locate the horizontal and vertical test point positions in the same relative positions in each table.

Calcoast suggested, and we agree, that the horizontal test point positions and the vertical test point positions should always appear in the same columns. In our earlier proposal, this was not the case, and we have made modifications consistent with Calcoast's suggestion. The final rule designates the horizontal test point positions in a column to the left of a column that designates the corresponding vertical test point positions.

Nissan suggested that those lamps that are permitted to demonstrate photometric compliance by either the individual test point method or the grouped test point method have the required photometric intensity values for each individual test point reduced to 60 percent of the current requirement and only allow use of the grouped test point method. We did not adopt this suggestion because it would have reduced the number of compliance methods available to manufacturers, a substantive change beyond the scope of this administrative rewrite.

The original response from the ASSN, as well as the comments from Guide, suggested abandoning Tables XVIII and XIX and incorporating headlamp photometry requirements in a series of tables similar to the current FMVSS No. 108. We were not persuaded that more headlamp photometric tables would add value to the standard. Upper beam headlamp requirements are not related to whether a headlamp is mechanically or visually/optically aimed and six beam patterns adequately cover all headlamps. Many photometric test points are common to all lower beam headlamps. Tables XVIII and XIX present all required beam patterns (except for certain motorcycle headlamps) in a clear and concise format. Table II directs the user to the appropriate beam pattern in Tables XVIII and XIX. We retained this format for headlamp photometry requirements in the final rule.

Several commenters mentioned inconsistent use of a ''no requirement'' indicator where a test point appears in a photometry requirements table but there is no value required at that point. Our proposal used both a blank space and a N.R. notation. In the final rule, we have adopted a consistent indicator that there is no requirement for a test point. A dashed line (-) is used exclusively for this purpose in photometry requirements tables.

Commenters generally favored the use of tables in the NPRM for presenting performance requirements. However, Nissan, Grote, and TTMA all commented that Table I was too lengthy and should be separated into several sections based on common content. The Alliance suggested splitting Table XXIII into three separate tables because it contains tests for three distinctive items: (1) Headlamps, (2) vehicle headlamp aiming devices (VHAD), and (3) replaceable light sources. The differentiation of content in Table II of the NPRM was mentioned as being a particularly appropriate method of providing distinction.

Several commenters, including ASSN/AAM and Grote, noted that tables containing significant amounts of text, such as the test requirements in Tables XXI, XXII, and XXIII, would be difficult to use because of lengthy passages that contain several sentences and express several unique test conditions or requirements. We agree with these comments. The tabular format is best suited to displaying quantitative values or short textual requirements. In the final rule, we moved virtually all test procedures and performance requirements to S14, the last section of the standard. Specifically, the content of Table XXI of the NPRM has been moved to S14.9, *Associated Equipment Physical Test Procedures and Performance Requirements*, the content of Table XXII of the NPRM has been moved to S14.3, *Motorcycle Headlamp Out of Focus Test Procedures and Performance Requirements*, S14.4, *General Test Procedures and Performance Requirements* (consisting of the color test and plastic optical materials test), and S14.5, *Signal Lamp and Reflective Device Test Procedures and Performance Requirements.* In addition, the content of Table XXIII of the NPRM has been moved to S14.6, *Headlamp Physical Test Procedures and Performance Requirements*, S14.7, *Replaceable Light Source Physical Test Procedures and Performance Requirements*, and S14.8, *Vehicle Headlamp Aiming Devices (VHAD) Physical Test Procedures and Performance Requirements.*

General test procedures and performance requirements that were located in S6.8 of the NPRM have been placed in S14.1 of the final rule. Similarly, the photometric test procedures of S6.8 of the NPRM are now in S14.2 of the final rule.

In the final rule, we decided to split several of the tables into shorter, more distinctive, sections and we completely revised the content of Table III and Table XIII. Table I, *Required Lamps and*

[5] The pattern is wider for backup lamps and tighter for high mounted stop lamps.

[6] No individual test point photometric intensity can fall below 60% of the point requirement when the group photometric method is used. In addition, photometric values between adjacent test points are regulated.

Reflective Devices, is divided into three parts: (1) Table I-a for passenger cars, multipurpose passenger vehicles, trucks, and buses of all widths; (2) Table I-b for trailers, and (3) Table I-c for motorcycles. We decided upon sectioning Table I in this manner for several reasons. One is user diversity. Organizations that manufacture vehicles such as passenger cars, multipurpose passenger vehicles, trucks, and buses typically do not also manufacture trailers or motorcycles. Likewise, organizations that manufacture trailers typically do not manufacture self propelled vehicles, and those that manufacture motorcycles do not produce cars, trucks, or trailers. Some commenters suggested separate sections for narrow vehicles (less than 2032 mm in width) and wide vehicles (those 2032 mm or wider). However, several manufacturers produce both narrow and wide vehicles, sometimes as different optional versions of the same vehicle, such as pickup trucks.

Another consideration was commonality. Both narrow and wide vehicles are required to be equipped with a headlighting system, turn signal lamps, taillamps, stop lamps, side marker lamps, side and rear reflex reflectors, backup lamps and license plate lamps. Narrow vehicles are required to have parking lamps and high-mounted stop lamps while wide vehicles are not. Similarly, wide vehicles must have clearance and identification lamps which are not required on narrow vehicles. This same distinction occurs between narrow and wide trailers, for which common content significantly surpasses differentiated content. Therefore, we have concluded that it is unnecessary to section Table I by vehicle width.

We are retaining the title of the three sections of Table I as *Required Lamps and Reflective Devices,* even though one of the lamps listed in Table I–a, Daytime Running Lamp (DRL), is not a required lamp. The heading above the DRL listing clearly describes it as being permitted but not required. However, because the DRL, when installed, is regulated in all attributes listed in Table I, *Number and Color, Mounting Location, Mounting Height, and Device Activation* (unlike other non-required lamps), the agency decided that Table I is the appropriate location for it.

The three sections of Table IV, *Effective Projected Luminous Lens Area Requirements,* are now identified as: (1) Table IV–a covering turn signal and stop lamps; (2) Table IV–b for high-mounted stop lamps; and (3) Table IV–c for school bus signal lamps. The four sections of Table V, *Visibility Requirements of Installed Lighting Devices,* now include: (1) Table V–a for backup lamps, high-mounted stop lamps, and school bus signal lamps; (2) Table V–b which contains the lens area option for turn signal lamps, stop lamps, taillamps, and parking lamps; (3) Table V–c which has the luminous intensity option for turn signal lamps, stop lamps, taillamps, and parking lamps; and (4) Table V–d that has older alternative requirements for turn signal lamps, stop lamps, and taillamps.

Table VI, *Front Turn Signal Lamp Photometry Requirements,* was split into two sections in the final rule. Table VI–a contains the base front turn signal lamp photometry requirements and also the values for 2½ times the base photometry requirements while Table IV–b contains values for 2 times the base photometry requirements and 1 the base photometry requirements

New Table XIII consisting of: (1) Table XIII–a, *Motorcycle Turn Signal Lamp Alternative Photometry Requirements,* and (2) Table XIII–b, *Motor Driven Cycle Alternative Photometry Requirements,* includes the stop lamp requirements for certain motor driven cycles previously part of Table IX in the NPRM, as well as alternative turn signal requirements for motorcycles noted in paragraph S7.1.1.1 and S7.1.2.1 of the NPRM but not previously tabularized. The three sections of Table XVI are now: (1) Table XVI–a, *Reflex Reflector Photometry Requirements,* (2) Table XVI–b, *Additional Photometry Requirements for Conspicuity Reflex Reflectors,* and (3) Table XVI–c, *Retroreflective Sheeting Photometry Requirements.*

Table XIX has been split into Tables XIX–a, containing photometric requirements for lower beam patterns LB1M, LB1V, LB2M, and LB2V. Table XIX–b contains requirements for lower beam patterns LB3M, LB3V, LB4M, and LB5M while Table XIX–c contains requirements for lower beam pattern LB4V.

As mentioned previously, the ASSN/AAM response proposed a common, templated organizational format for the individual lamp sections and expansion of their content to include 14 subsections representing specific requirements. The requirements that they suggested be included in each section include: (1) Number, (2) color of light, (3) arrangement, (4) position, (5) geometric visibility, (6) orientation, (7) effective projected luminous lens area, (8) electrical, (9) tell tale, (10) marking requirements, (11) other provisions, (12) plastic materials, (13) photometry, and (14) physical tests. Implementing this request presents a dilemma for several reasons. First, most of the requirements suggested to be listed in individual lamp sections are already stated in parts of Table I, Table IV, and Table V. Table I of the NPRM is an expansion of Tables I, II, III, and IV of the current version of Standard No. 108, tables which have been part of the standard for decades. The agency rarely receives questions or complaints about regulatory content contained in Tables I through IV, but instead, they are often considered the most useful feature of the current version. We received no comments, including the ASSN/AAM submission, which suggested elimination of Table I.

We also believe that the suggestion of ASSN/AAM to remove the activation requirements from Table I and place them all in a new section titled ''Electrical'' was without merit. The activation requirements of the various types of lamps, like the other categories listed in Table I, are primarily vehicle-level requirements rather than device-level requirements, and are best presented along with those other requirements.

Table V of the NPRM is a restatement of Figures 19 and 20 of the current version of Standard No. 108, which were added in a final rule [7] published on August 11, 2004 which promulgated the current visibility requirements. The agency decided that it would not be appropriate to disperse the visibility requirements of Table V (and likewise the effective projected luminous lens area requirements of Table IV) into individual lamp sections. The primary reason was that in real world situations, many lamp functions are combined with other lamp functions, very often optically combined. It is not unusual for a vehicle to have a combination rear lamp where the taillamp, stop lamp, and rear turn signal lamp functions are optically combined. The same holds true for front turn signal lamps and parking lamps. The presentation of visibility requirements for all regulated lamp functions together in Table IV allows regulated parties to quickly determine the appropriate requirements for such combination lamps and perhaps aid the decision about which visibility alternative to use for certification.

The decision to leave Tables I, IV, and V intact in the final rule means that adopting the ASSN/AAM template for individual lamp sections would result in large scale duplication of requirements in Standard No. 108. Duplication of the same requirement in more than one location in a regulatory document has the potential for

[7] 69 FR 48805 (Aug. 11, 2004) (Docket No. 2004–18794–1).

unintended consequences. We intended to avoid those consequences by having each discrete requirement only stated once in Standard No. 108.[8]

Therefore, to be responsive to the request of ASSN/AAM concerning the format of individual lamp sections while still maintaining the integrity of the standard by having only a single statement of each requirement, we have adopted the use of pointing statements. These pointing statements appear in those subsections of each lamp section where a requirement does exist but is stated in another location of the standard. For instance, in paragraph S7.4 pertaining to side marker lamps, subsections 7.4.1 *Number,* 7.4.2 *Color of light,* 7.4.3 *Mounting location,* 7.4.4 *Mounting height,* and 7.4.5 *Activation,* all conclude with the pointing statement ''See Tables I–a, I–b, and I–c.'' Similarly, S7.4.9 *Markings* points to S6.5 for details of the applicable marking requirements. S7.4.6 *Effective projected luminous lens area,* S7.4.7 *Visibility,* S7.4.8 *Indicator,* S7.4.10 *Spacing to other lamps,* S7.4.11 *Multiple compartment and multiple lamps,* and S7.4.12 *Ratio* all conclude with the term ''No requirement'' indicating a requirement for those specific items of lamp performance does not exist in Standard No. 108.

The entire content of Table III of the NPRM, dealing with conspicuity systems, was moved to paragraph S8.2 of the final rule. A new Table III was created to serve as a compilation of pointing statements directed to the locations within the final rule where marking requirements reside. While some headlamp marking requirements were relocated to paragraph S6.5 in the final rule, a number of other marking requirements continue to be dispersed within the document. In these cases, we have decided that the marking requirements are best located near the specific items to which they apply. However, these locations are all identified in Table III and consultation with this table should lead the user to all applicable marking requirements.

Grote suggested that lengthy paragraphs of regulatory text be simplified by splitting them into separately numbered sub-paragraphs, particularly where the requirements were diverse. In a number of instances, we have been able to create such separation. Regulatory provisions (including renumbered paragraphs) where this has been done include: S6.1.3, S6.1.4.2, S6.1.5.2, S6.2.6, S6.5.3.3, S6.5.3.4, S6.6, S7.1.1.11, S7.1.1.12, S7.1.2.11, S7.1.2.12, S7.1.3, S7.2.11, S7.3.11, S7.3.12, S7.3.15, S7.7.13, S7.7.15, S7.9.14, S8.2.1, S8.2.2.3, S9.3.4, S9.8, S10.14.2, S10.17.1.1, S10.17.1.2, S10.17.1.3, S13, S14.1.4, S14.2.1, S14.2.3, S14.2.4, S14.2.5, S14.4.1, S14.4.2, S14.5, S14.6, S14.7, and S14.9. We have included the term ''split for clarity'' or similar language, often parenthetically, numerous places in the discussion of revisions to note where a section of text from the NPRM was divided into several smaller sub-sections in the final rule but not otherwise revised.

Guide submitted numerous suggestions for reorganizing the NPRM by the reassignment of certain paragraphs within the organizational framework of the NPRM. In several instances, the agency concluded that the Guide suggestion proved to be a more appropriate location for a paragraph than the location proposed in the NPRM. We have noted these reassignments in our discussion (but without attribution to a Guide suggestion in some cases). This has caused numerous changes in the paragraph numbers throughout the regulatory text. Where a requirement in the final rule was identified differently in the NPRM, we have indicated the previous paragraph number in the revision summary.

A number of Guide's suggested reassignments were not adopted, because we decided that the applicable textual provisions were already situated in the most appropriate location. Again, we did not mention every such rejection of Guide's suggested ordering or our reasoning for such decisions. While we believe that the final rule's organizational structure is the optimal choice, we recognize that it is not the only choice. Often, some of the requirements of Standard No. 108 intermix several attributes of lamps. Such an example is paragraph S7.11.2.1 which contains requirements for a DRL spaced near a turn signal lamp (*e.g.,* considerations for the actual separation distance, the luminous intensity of both the DRL and the turn signal lamp, whether the DRL is optically combined with a lower beam headlamp, and the activation properties of both the DRL and turn signal lamp). Requirements such as these do not fit neatly into a *Mounting Location* section or an *Activation* section, and their essence would not survive dispersion of the component requirements into these sections because of their interdependence on several diverse attributes.

Another such situation involves the presentation of the requirements for conspicuity systems. The content of Table III of the NPRM was moved to paragraph S8.2 of the regulatory text to provide a more comprehensible presentation format. An argument could be made that this content should be split into two portions, one portion describing how conspicuity material is spaced and arranged and another portion describing where conspicuity material is to be placed on applicable vehicles. If this apportionment were made, the first portion could be considered a device-level requirement and the second portion a vehicle-level requirement. Dispersing conspicuity system content in this way may seem correct from an organizational perspective, but would be in conflict with the goals of the rewrite of Standard No. 108 to present the requirements in a straight forward and logical manner.

Our guiding principle in organizing the structure of the FMVSS No. 108 final rule was to attempt to locate each requirement in the place where a user would be most likely to look for it. Accordingly, the final rule has been organized with the following major sections:

S1 *Scope.*
S2 *Purpose.*
S3 *Application.*
S4 *Definitions.*
S5 *References to SAE publications.*
S6 *Vehicle requirements.*
S7 *Signal lamp requirements.*
S8 *Reflective device requirements.*
S9 *Associated equipment requirements.*
S10 *Headlighting system requirements.*
S11 *Replaceable light source requirements.*
S12 *Headlamp concealment device requirements.*
S13 *Replaceable headlamp lens requirements.*
S14 *Physical and photometry test procedures and performance requirements.*

Tables

Table I *Required Lamps and Reflective Devices.*
Table II *Headlighting Systems.*
Table III *Marking Requirements Location.*
Table IV *Effective Projected Luminous Lens Area Requirements.*
Table V *Visibility Requirements of Installed Lighting Devices.*
Table VI *Front Turn Signal Lamps Photometry Requirements.*
Table VII *Rear Turn Signal Lamps Photometry Requirements.*
Table VIII *Taillamp Photometry Requirements.*
Table IX *Stop Lamp Photometry Requirements.*
Table X *Side Marker Lamp Photometry Requirements.*
Table XI *Clearance and Identification Lamps Photometry Requirements.*

[8] See the discussions of Table II and Table IX for explanations of existing duplicated requirements in the current version of FMVSS No. 108.

Table XII *Backup Lamp Photometry Requirements.*
Table XIII–a *Motorcycle Turn Signal Lamp Alternative Photometry Requirements.*
Table XIII–b *Motor Driven Cycle Stop Lamp Alternative Photometry Requirements.*
Table XIV *Parking Lamp Photometry Requirements.*
Table XV *High-Mounted Stop Lamp Photometry Requirements.*
Table XVI *Reflex Reflector and Retroreflective Sheeting Photometry Requirements.*
Table XVII *School Bus Signal Lamp Photometry Requirements.*
Table XVIII *Headlamp Upper Beam Photometry Requirements.*
Table XIX *Headlamp Lower Beam Photometry Requirements.*
Table XX *Motorcycle Headlamp Photometry Requirements.*

Figures

Figure 1 *Chromaticity Diagram.*
Figure 2 *Flasher Performance Chart.*
Figure 3 *Replaceable Bulb Headlamp Aim Pads.*
Figure 4 *Headlamp Connector Setup.*
Figure 5 *Headlamp Abrasion Test Fixture.*
Figure 6 *Thermal Cycle Test Profile.*
Figure 7 *Dirt/Ambient Test Setup.*
Figure 8 *Replaceable Light Source Deflection Test Setup.*
Figure 9 *Environmental Test Profile.*
Figure 10 *Headlamp Replaceable Light Source Pressure Test Setup.*
Figure 11 *Trailer Conspicuity Treatment Examples.*
Figure 12–1 *Trailer Conspicuity Detail I.*
Figure 12–2 *Trailer Conspicuity Detail II.*
Figure 13 *Tractor Conspicuity Examples.*
Figure 14 *92x150 Headlamp Aim Deflection Test Setup.*
Figure 15 *Types G and H Headlamp Aim Deflection Test Setup.*
Figure 16 *Types A and E Headlamp Aim Deflection Test Setup.*
Figure 17 *Type B Headlamp Aim Deflection Test Setup.*
Figure 18 *Types C and D Headlamp Aim Deflection Test Setup.*
Figure 19 *License Plate Lamp Target Locations.*
Figure 20 *License Plate Lamp Measurement of Incident Light Angle.*
Figure 21 *Vibration Test Machine.*
Figure 22 *Flasher Test Standard Circuit.*

4. Suggestions Beyond the Scope of the Rewrite

Units of Measurements

Several comments were received concerning the way quantities in the NPRM were measured, in terms of units. In some cases, measurements were only in metric units, others in only English units, and still others dual-dimensioned with both metric and English units. We note that this situation currently exists within Standard No. 108 and the SAE standards and Recommended Practices incorporated by reference. Such perceived inconsistencies in the final rule are the result of the agency's decision to make no substantive changes to Standard No. 108 during the rewrite process. This means stating measurements in their original form consistent with their original source documents, instead of attempting to convert and standardize the units.

ASSN preferred dual English/metric measurements for every quantity and requested that both be provided in the final rule. The commenter also preferred that linear measurements be expressed in both inches and centimeters. AAM requested dual units with metric units followed by English units and the use of direct conversions to establish those measurements that were only stated in one unit in the NPRM. Nissan argued that in recent rulemakings, the agency has consistently listed measurements using metric units with English units referenced parenthetically. Nissan preferred linear measurements that were in millimeters, except for photometric test distances which should remain dimensioned in meters. Conversely, Grote recommended that measurements be expressed in inches followed by centimeters in parentheses, believing that the vast majority of current users continue to use English measurements. SEMA also supported dual units of measurements with a preference for centimeters rather than millimeters. In supplemental comments, AAM/ASSN requested all quantities in FMVSS No. 108 that are not now metric be converted to metric pursuant to Executive Order 12770 (*Metric Usage in Federal Government Programs*).

The FMVSS No. 108 rewrite is considered an administrative action because existing requirements and obligations are not being increased, decreased, or substantively modified. The agency has decided that converting values and providing dual-dimensions is outside the scope of this final rule. The conversion process, in some cases, would result in substantive change in the current requirements of the standard. This is because such conversions rarely result in a whole number equivalent, but more likely in an unwieldy value with more digits than the value it was converted from. The converted unit may have a non-exact value requiring it to be truncated after several digits. Such rounding may have little effect on some attributes but significant effect on others. An additional complication is that some currently dual-dimensioned values in FMVSS No. 108 are not exact equivalents. For instance, the air pressure required to be applied to the replaceable light source in the replaceable light source pressure test is expressed as 70 KPa (10 psig). However, the English equivalent of 70 KPa is 10.152641661 psig and the metric equivalent of 10 psig is 68.9475728 KPa. Thus, a user may conclude that a replaceable light source may be compliant with the standard if it withstands a pressure of 68.9475728 KPa and not 70 KPa.

Additionally, the comments received in response to the NPRM show that users of FMVSS No. 108 do not have a consistent preference for a particular approach regarding units of measurement. In consideration of our principle not to change any existing requirements, as well as the wide range of opinions on the best approach for dual-dimensioning, the agency decided to present values consistent with the current standard instead of choosing one of the suggested options.

Photometric Maps

As previously mentioned, the AAM/ASSN supplementary comments, the ASSN initial comments, and the NAL comments recommend inclusion of a number of new graphical maps that would show details of the requirements for the various photometric test patterns. The signal lamp maps would show the position of each individual test point and how those points are combined into groups. The headlamp maps would show individual test points, linear test elements, and zonal test elements.

In reviewing the suggested graphical maps, it was unclear which test points were part of which zone. Furthermore, such maps are beyond the scope of the administrative rewrite. In addition, there were no compelling arguments presented addressing how their inclusion would advance the goals of the rewrite. Adding such graphical maps would provide redundant information, significantly increasing the risk of potentially conflicting requirements, and likely generate numerous interpretation requests, especially if users were confused by the new graphs.

That is not to say that these types of illustrations have no value. They seem particularly well suited for use by design and manufacturing organizations use in their internal design standards or photometric test procedures documents. Standard No. 108, like all Federal Motor Vehicle Safety Standards, strives to present regulatory requirements in the clearest way possible. It is not intended to serve as an all-inclusive working guide for designing, testing, or manufacturing lamps, reflective devices, or associated equipment. NHTSA

anticipates that user organizations will carefully incorporate the requirements of FMVSS No. 108 into their internal working documents.

Requests for New or Revised Definitions

Commenters requested inclusion in the final rule of numerous definitions for specific terms. These include: ''center (of item),'' ''fixed body panel,'' ''four lamp type headlamp,'' ''hazard warning lamps,'' ''obstruction,'' ''rigid part of vehicle,'' ''separately lighted areas,'' ''two lamp type headlamp,'' ''special tools,'' ''tools ordinarily available,'' ''supplemental lamp,'' and ''auxiliary lamp.'' There was also a suggestion for a revised definition for the term ''color bleeding,'' alleging it could be mistaken for the term ''light bleed.'' A suggestion was also submitted for addition of definitions of all lamp types mentioned in the current version of FMVSS No. 108, with the specific example of fog lamp.

In its initial submission, AAM suggested the final rule use the term ''* * * light source optical centers * * *'' in place of the term ''* * * light sources * * *'' and the term ''* * * optical centers * * *'' in place of the term ''* * * optical axes * * *'' as revisions that would be technology-neutral in the specific case of a series wired array of LEDs being considered a single light source per the January 5, 2006 letter of interpretation to AMECA.[9] There were also suggestions that the term ''lighted section'' be used exclusively and in place of ''multiple compartment'' and ''multiple lighted area.'' Adopting any of these suggestions would have been a substantive action which would be beyond the defined scope of this rewrite. For this reason we have not adopted any of these suggested modifications in the final rule.

5. Suggestions Within the Scope of the Rewrite

SAE Documents

A significant initiative of the FMVSS No. 108 rewrite was the incorporation of requirements contained in SAE Standards and Recommended Practices (currently incorporated by reference or sub-reference) directly into the body of the standard. The current version of Standard No. 108 relies heavily on the content of numerous SAE documents. It contains over 100 references to some 35 different SAE documents, many of which were issued in the 1960s. Some of these documents are incorporated in their entirety, whereas only portions of others are cited. The NPRM integrated much of the content of these SAE document directly into the regulatory language, resulting in only eight SAE documents continuing to be incorporated by reference.

Generally commenters supported this action. SEMA requested that all referenced and sub-referenced SAE documents be included in the regulatory text of the final rule. While total elimination of documents incorporated by reference proved to be impractical, we did eliminate references to three additional SAE documents in the final rule as discussed below. We also restored a reference to SAE J567b, *Bulb Sockets,* in S14.2.1.6.2 of the final rule based upon comments by Calcoast. This reference exists in Footnotes 2 and 3, which follow Table IV, of the current version of FMVSS No. 108, but was eliminated in the NPRM. We agree with Calcoast that the exemption permitted in these footnotes stating that bulbs not listed in SAE J573d, *Lamp Bulbs and Sealed Units,* December 1968, are not required to use a socket that conforms to the requirements of SAE J567b, *Bulb Sockets,* April 1964, is needed in the final rule.

SAE J577, *Vibration Test Machine,* April 1964, has been replicated as Figure 21, and all references to SAE J577 have been removed from the final rule. SAE J823b, *Flasher Test Equipment,* April 1968, describes a standard test circuit to be used in the performance testing of vehicular hazard warning signal flashers and turn signal flashers. This SAE standard also has specifications for power supplies used in these tests and describes the circuit adjustments necessary to perform valid tests. We have chosen to incorporate the content of SAE J823b into the final rule. New Figure 22, *Flasher Standard Test Circuit,* provides the test circuit schematic diagram from Figure 1 of SAE J823b. Paragraph S14.9.3.1 of the final rule states requirements for circuit adjustments applicable to flasher tests, and paragraph S14.9.3.2 provides separate power supply specifications for the various flasher performance tests. With the inclusion of paragraph S14.9.3 and Figure 22 in the final rule, all references to SAE J823b have been deleted.

SAE J588e, *Turn Signal Lamps,* September 1970, incorporated by reference in FMVSS No. 108, is referenced in paragraph S5.1.1.1 of the current version of the standard solely to establish requirements for double-sided turn signal lamps installed on truck tractors. It was eliminated from the final rule by incorporating the content of paragraph 3.4 and a portion of paragraph 3.9.1 of SAE J588e into paragraph S6.1.1.3 of the NPRM. The remaining portion of paragraph 3.9.1 was incorporated in Table VII, *Rear Turn Signal Lamp Photometry Requirements,* of the NPRM by revision to Footnote 6.

The revised paragraph S6.1.1.3 now reads, '' * * * A truck tractor need not be equipped with turn signal lamps mounted on the rear if the turn signal lamps at or near the front are of double-face construction and are located such that they meet the photometric requirements for double-faced turn signal lamps specified in Footnote 6 of Table VII.'' Continuing, paragraph S6.1.1.3.1 states, ''The flashing signal from a double-faced signal lamp must not be obliterated when subjected to external light rays from either in front or behind, at any and all angles.'' The revised Footnote 6 to Table VII now states, ''A double-faced turn signal lamp installed as described in paragraph S6.1.1.3 on a truck tractor need only meet the photometric requirements for a left side lamp where the lamp is mounted on the left side of the vehicle, and for a right side lamp where the lamp is mounted on the right side of the vehicle.''

This same SAE standard, J588e, *Turn Signal Lamps,* September 1970, is cited in the current version of FMVSS No. 108 as containing the requirements for the illuminated pilot indicator for turn signal lamp failure. The NPRM had erroneously stated the requirements from SAE J588 NOV84, *Turn Signal Lamps.* Paragraph S9.3 of the final rule now correctly states the illuminated area of the indicator and the acceptable modes of indication. Consistent with these changes, all references to SAE J588e have been removed from the standard.

We undertook the effort to eliminate these additional SAE references in the final rule in part because the nature of some comments suggested that the relationship between FMVSS No. 108 and its incorporated SAE documents causes significant confusion.

One example of such confusion is found in the comments of Grote and Koito in reference to the limitations in applying reduced photometric requirements to adjacent front and rear side marker lamps. This section is based upon paragraph S5.1.1.8 of the current version of Standard No. 108 which states, ''For each motor vehicle less than 30 feet in overall length, the photometric minimum candlepower[10] requirements for side marker lamps specified in SAE Standard J592e,

[9] *http://isearch.nhtsa.gov/files/Wolford.2.html.*

[10] The term ''candlepower'' used in this context means the contemporary unit of measurement used to express the luminous intensity attribute.

Clearance, Side Marker, and Identification Lamps, July 1972, may be met for all inboard test points at a distance of 15 feet from the vehicle and on a vertical plane that is perpendicular to the longitudinal axis of the vehicle and located midway between the front and rear side marker lamps.'' In this case, the limitation of vehicles less than 30 feet in overall length recognizes that those vehicles are ones where intermediate side marker lamps (and intermediate side reflex reflectors) are not required to be installed. Table 1 of SAE J592e, detailing the photometric requirements of side marker lamps, also contains a footnote ''b'' further limiting the vehicles where reduced photometric requirements can be applied. Footnote ''b'' states that, ''The requirements for side markers used on vehicles less than 80 inches (2 meters) wide may be met for inboard test points * * * '' This vehicle width limitation is reflected in Footnote 1 of Table X. This is an example where the text of an incorporated SAE document applies limitations beyond those contained in the text of FMVSS No. 108.

Another example is illustrated in the comments by AAM and Koito about the spatial relationship between front turn signal lamps and certain other front-mounted lamps and the photometric requirements the relationship imposes on the front turn signal lamp as stated in paragraph S7.1.1.2 of the NPRM (S7.1.1.10 of the final rule). Current FMVSS No. 108, at paragraph S5.3.1.7, imposes a multiplier of 2.5 on minimum photometric intensity requirements for a front turn signal lamp mounted less than 100 mm from the lighted edge of a lower beam headlamp. Turn signal lamps are also required to be designed to conform to referenced standards SAE J588 NOV84 for vehicles less than 2032 mm in overall width and SAE J1395 APR85 for vehicles 2032 mm or more in overall width. These documents provide, in paragraph 5.1.5.4 of SAE J588 and paragraphs 5.1.5.4, 5.1.5.5, and 5.1.5.6 of SAE J1395, additional photometric requirements for turn signal lamps based upon their construction. The method the turn signal lamp uses to project light (i.e., whether it primarily uses a reflector to direct light or not) determines how the relationship is measured between the turn signal lamp and the lower beam headlamp, or a surrogate lower beam headlamp such as an auxiliary lower beam headlamp or a fog lamp. Based upon this measurement, the turn signal lamp may be required to have a multiplier of 1.5, 2.0, or 2.5 times the minimum photometric intensity. Thus, it is possible for a turn signal lamp not to be required to have increased intensity based upon paragraph S5.3.1.7 of current FMVSS No. 108 but still be required to have increased intensity because of its construction or proximity to another front lamp, such as a fog lamp. This is an example where an incorporated SAE document imposes requirements beyond those explicitly stated in the regulatory text of Standard No. 108.[11]

In its comments, AAM stated that FMVSS No. 108 has never contained a requirement for a vehicular hazard warning signal pilot indicator as contained in paragraph S6.6 of the NPRM (paragraph S9.8 of the final rule). We note that this requirement came from SAE J910, *Vehicular Hazard Warning Signal Operating Unit,* January 1966, and SAE J945, *Vehicular Hazard Warning Flasher,* February 1966, both incorporated by reference in Tables I and III of the current version of FMVSS No. 108. The requirements from SAE J910 contained in paragraph 5 detail how the pilot indicator is to operate, how it can be combined with the turn signal indicator, and the size and color of a dedicated vehicular hazard warning signal pilot indicator. The requirements from SAE J945 describe how the means of providing the indication can be incorporated into the flasher if it functions under all test conditions applied to the flasher and how an audible indication can be used in conjunction with the visible indication. This is an example where incorporated SAE documents contain a requirement that is not expressly stated in the text of FMVSS No. 108.

AAM also stated in its comments that only the lighting equipment requirements of SAE J587 OCT81, *License Plate Lamps (Rear Registration Plate Lamps),* are incorporated by reference in Standard No. 108 (i.e., in paragraph S5.1.1 of the current version). AAM argued that a license plate holder is not an item of lighting equipment and that requirements for the holder would also apply to a front license plate holder. In response, we note that SAE J587 OCT81 does contain specific requirements for a license plate holder and its relationship with the license plate, the surface the vehicle stands on, and the license plate lamp. The performance of a license plate lamp is dependent upon its physical relationship with the license plate. The license plate must be secured in position to evaluate this performance. To alleviate AAM's concern with application of the requirement to a front license plate holder, we have revised the text of paragraph S6.6.3 of the final rule (paragraph S6.1.1 of the NPRM) to state, ''Each *rear* license plate holder must be designed and constructed to provide a substantial plane surface on which to mount the plate. The plane of the license plate mounting surface and the plane on which the vehicle stands must be perpendicular within ± 15° '' (emphasis added).

Grote commented that lamps designed to conform to SAE J1395 APR85, *Turn Signal Lamps for use on Motor Vehicles 2032 mm or more in Overall Width,* and SAE J1398 MAY85, *Stop Lamps for use on Motor Vehicles 2032 mm or more in Overall Width,* incorporated by reference in Table I of the current version of FMVSS No. 108 for use on multipurpose passenger vehicles, trucks, trailers, and buses, of 80 or more inches in overall width, could also be used on vehicles less than 80 inches (2032 mm) overall width, without meeting the requirements listed in Table III for these lamps. Grote based its comment on a statement in the *Scope* of SAE J1395 stating that, ''Turn signal lamps conforming to this report may also be used on vehicles less than 2032 mm in overall width.'' The *Scope* of SAE J1398 has a similar statement concerning stop lamps. This assertion is simply not correct. Table III of the existing version of Standard No. 108 applies to all passenger cars and motorcycles, and multipurpose passenger vehicles, trucks, buses and trailers of less than 80 inches (2032 mm) in overall width. Table III clearly requires turn signal lamps to comply with SAE J588 NOV84 and stop lamps to comply with SAE J586 FEB84. Therefore, manufacturers may choose to design their lamps to also comply, respectively, with SAE J1395 APR85 and SAE J1398 MAY85, but they also must be designed to comply, respectively, with SAE J588 NOV84 and SAE J586 FEB84. We do not agree with the argument that compliance with only SAE J1395 APR85 and SAE J1398 MAY85, respectively, is permitted, because this clearly contradicts the language in the existing regulatory text.

Table III of the current version of FMVSS No. 108 requires that all passenger cars and motorcycles, and multipurpose passenger vehicles, trucks, trailers, and buses, of less than 80 inches (2032 mm) in overall width must be equipped with lamps designed to conform to the requirements of SAE J588 NOV84, *Turn Signal Lamps for use on Motor Vehicles Less Than 2032 mm*

[11] The subject of turn signal lamp photometric requirements based upon spacing to other front lamps is discussed in several interpretations such as Matsui (9/20/95).

in Overall Width, and SAE J586 FEB84, *Stop Lamps for use on Motor Vehicles Less Than 2032 mm in Overall Width.* Thus, if a turn signal lamp or stop lamp is not designed to conform with SAE J588 NOV84 or SAE J586 FEB84 respectively, it cannot be used on any passenger car or motorcycle or on any multipurpose passenger vehicle, truck, trailer, or bus of less than 80 inches in overall width, no matter whether it also is designed to conform to SAE J1395 APR85 or SAE J1398 MAY85. The explicit requirements of FMVSS No. 108 prevail over any seemingly contradictory language of an incorporated third-party document.

Observing the confusion that exists because the current version of Standard No. 108 relies so heavily upon reference to third-party documents, we are convinced that our action to remove those references to the maximum extent possible was a correct decision. Remaining references to SAE documents in the final rule include:

S6.4.5 SAE J602, *Headlamp Aiming Device for Mechanically Aimable Sealed Beam Headlamp Units,* August 1963
S9.3.5 SAE J941b, *Motor Vehicle Driver's Eye Range,* February 1969
S10.14.7.7 SAE J602 OCT80, *Headlamp Aiming Device for Mechanically Aimable Sealed Beam Headlamp Units*
S10.15.7.6 SAE J602 OCT80, *Headlamp Aiming Device for Mechanically Aimable Sealed Beam Headlamp Units*
S10.16.3.6 SAE J602 OCT80, *Headlamp Aiming Device for Mechanically Aimable Sealed Beam Headlamp Units*
S10.18.7 SAE J602 OCT80, *Headlamp Aiming Device for Mechanically Aimable Sealed Beam Headlamp Units*
S10.18.7.2 SAE J602 OCT80, *Headlamp Aiming Device for Mechanically Aimable Sealed Beam Headlamp Units*
S11.3 SAE J2009 FEB93, *Discharge Forward Lighting Systems*
S14.2.1.6 SAE J573d, *Lamp Bulbs and Sealed Units,* December 1968
S14.2.1.6.1 SAE J573d, *Lamp Bulbs and Sealed Units,* December 1968
S14.2.1.6.2 SAE J573d, *Lamp Bulbs and Sealed Units,* December 1968
S14.2.1.6.2 SAE J567b, *Bulb Sockets,* April 1964
S14.7.3.1.2 SAE J2009 FEB93, *Discharge Forward Lighting Systems*

Cited Interpretations

In the rewrite proposal, the agency integrated the clarifications provided by key letters of interpretation into the regulatory text of the standard. The criteria used in determining whether an interpretation was significant focused on whether it provided value in clarifying the provisions in the standard. In the vast majority of cases, past requests for interpretation have identified questions regarding applicability of certain provisions of the standard to specific design configurations. However, influential interpretations that clarified provisions of the standard, and continue to provide guidance to various parties beyond the original requestor, were believed to be particularly useful additions to the regulatory text. In the NPRM, the agency solicited public comment about additional interpretations that might be included in the final rule.

In their submissions, several commenters mentioned specific interpretations of FMVSS No. 108 as candidates for incorporation in the regulatory text of the final rule. In two instances, we decided that the cited interpretations would make the standard more precise and added them to the final rule. The two interpretations are discussed below. Several commenters suggested other potential interpretations for inclusion into the final rule; however the agency decided that none of these provided enough value in clarifying the provisions of FMVSS No. 108.

Nissan suggested that inclusion of the June 18, 1985 interpretation to Mr. Nakaya [12] would more precisely define where the measurement of the height of a high-mounted stop lamp should be made with respect to the rear window of a passenger car. A more detailed description of this interpretation is found in the discussion of revised paragraph S6.1.3.2.1 of the final rule.

A suggestion of TTMA was to incorporate an interpretative rule [13] published in 1999 into the standard. This interpretative rule quantifies the ''as near the top as practicable'' mounting requirement that applies to clearance lamps and identification lamps mounted on a vehicle with cargo doors. That rule states that NHTSA will presume it practical to mount these lamps above the cargo doors when the header above those doors extends at least 25 mm (1 inch) above them. A more detailed discussion of this issue is found in the discussion of Table I.

Revisions to the Proposal

S1 Through S3

There were no comments submitted that related to S1, S2, or S3.

S4 Definitions

AAM objected to mounting and spacing criteria being part of the definitions of a clearance lamp, identification lamp, and side marker lamp. In response, we note that all three of these definitions are faithful to the applicable, long-referenced, SAE standards whose content we have included in both the proposal and final rule text. These mounting and spacing criteria serve to clarify the spatial function of the lamps and are appropriate parts of the definitions. Therefore, we are keeping these criteria in the final rule.

We removed the third sentence from the definition of *''effective projected luminous lens area,''* stating the term *''functional lighted lens area''* appearing in any SAE document had an identical meaning. The single instance of the term *''functional lighted (lens) area''* appearing in the NPRM was in paragraph S7.1.1.2.2 (S7.1.1.10.3 in the final rule) in reference to the procedure to determine the measurement point for a front turn signal lamp with a reflector. We replaced *''functional lighted (lens) area''* in paragraph S7.1.1.10.3 with *''effective projected luminous lens area''* and were thereby able to remove any reference to *''functional lighted lens area''* in the standard.

Nissan observed that the definitions for ''mechanically aimable headlamp'' and ''material'' were not in alphabetical order in the NPRM. We have corrected this in the final rule.

GE commented that the definition of ''replaceable light source'' in the NPRM was not identical to that of the current version of FMVSS No. 108. As stated in the NPRM ''replaceable light source,'' means an assembly of a capsule, base, and terminals *manufactured as a light source for an upper and/or lower beam of a replaceable bulb headlamp* that is designed to conform to the requirements of Appendix A or Appendix B of 49 CFR part 564, *Replaceable Light Source Information.* The italicized text was added to the definition included in the current version of FMVSS No. 108 as part of an attempt to clarify that integral beam and replaceable bulb headlamps are allowed to incorporate ''replaceable light sources'' that are used for purposes other than headlighting. However these ''replaceable light sources'' are not those defined in S4, but rather ones typically used for non-headlighting functions such as turn signal lamps, parking lamps, and front side marker lamps. In the final rule, as explained later in the discussion of S10 *Headlighting system requirements,* we have decided to address this issue by revising how these non-headlighting light sources were described. Because the revisions in language in S10 should eliminate confusion between headlighting and non-headlighting replaceable light sources, there is no need to change the definition in S4 and it is identical in the

[12] *http://isearch.nhtsa.gov/gm/85/1985–02.42.html*

[13] 64 FR 16358, (April 5, 1999).

final rule to that of the current version of FMVSS No. 108.

Nissan commented that the definitions for ''vehicular hazard warning signal flasher'' from SAE J945, *Vehicular Hazard Warning Signal Flasher,* February 1966, and for ''vehicular hazard warning signal operating unit'' from SAE J910, *Vehicular Hazard Warning Signal Operating Unit,* January 1966, described the function of the hazard warning signal system in slightly different ways. Nissan contended, and we agree, that the description of the operation of the hazard warning signal system should be consistent. Therefore, we have revised the definition of ''vehicular hazard warning signal flasher'' from '' * * * means a device which, as long as it is turned on, causes all the required hazard warning lamps to flash'' to '' * * * means a device which, as long as it is turned on, causes all the required turn signal lamps to flash.'' Similarly the definition of the ''vehicular hazard warning signal operating unit'' was revised from '' * * * means a driver controlled device which causes all turn signal lamps, or other hazard warning lamps, to flash simultaneously to indicate to approaching drivers the presence of a vehicular hazard'' to '' * * * means a driver controlled device which causes all required turn signal lamps to flash simultaneously to indicate to approaching drivers the presence of a vehicular hazard''. This revision recognizes that the hazard warning signal of paragraph S6.1.5.1 only requires simultaneous flashing of sufficient turn signal lamps to meet the turn signal photometric requirements of Standard No. 108.

S5 References to SAE Publications

In paragraph S5.2 of the NPRM we stated that ''A complete list of all SAE publications incorporated by reference in this standard are indexed at 49 CFR 571.5(j)''. This inclusion was in anticipation of a final rule based upon a NPRM [14] that would have established 49 CFR 571(j) to contain this list. This final rule has not been issued. Therefore, we have deleted this reference from the final rule.

AAM requested that the word ''required'' be inserted into the first sentence of paragraph S5.1 between the words ''Each'' and ''lamp'' to be faithful to paragraph S5.1.1 of the current version of FMVSS No. 108 containing provisions for lamps, reflective devices, and associated equipment to be designed to comply with specific SAE Standards and Recommended Practices. We agree and have revised the final rule.

S6 Vehicle Requirements

Proposed paragraph S6.1.1.1.1, allowing conspicuity material on a trailer to also serve as the required reflex reflectors if the conspicuity material was placed at the required locations of the reflex reflectors, has been relocated into the Reflex Reflectors portion of Table I-b of the final rule.

Paragraph S6.1.1.3 was modified as stated in the *SAE Documents* section above to fully integrate the requirements of SAE J588e, *Turn Signal Lamps,* September 1970, relating to the use of double-faced turn signal lamps on truck tractors. This amendment also required a revision to Table XII and its Footnote 6 as well as the addition of paragraph 3.9.1 of SAE J588e as paragraph S6.1.1.3 of FMVSS No. 108 and paragraph 3.4 of SAE J588e as paragraph S6.1.1.3.1 of FMVSS No. 108.

Paragraph S6.1.1.4 of the final rule, (paragraph S6.2.4 of the NPRM), was moved into the *Vehicle requirements* section based upon the Guide comment that it was a more appropriate location than the *Impairment* section. A typographical correction was also made to clarify that a parking lamp or a fog lamp may not be used as a DRL. This correction now results in language that is faithful to the current version of FMVSS No. 108 at paragraph S5.5.11(a).

Paragraph S6.1.1.4, *Hazard warning lamps,* of the NPRM describing activation provisions for hazard warning lamps was moved to the Activation section where it became paragraph S6.1.5.1 in the final rule.

The phrase ''fixed body panel'' in proposed paragraph S6.1.3.1 was objected to by Koito as being more restrictive than the phrase ''rigid part'' which is used in the current version of FMVSS No. 108 at paragraph S5.3. We have decided to retain ''rigid part'' in the final rule to be faithful to the original language and meaning. The phrase '' * * * the mounting location and * * * '' has been added to paragraph S6.1.3.1 ahead of ''height'' to be consistent with the references to Tables I, II, III, and IV of the current version of FMVSS No. 108 as referenced at paragraph S5.3 of that document. This clarification was recommended by Guide.

Guide also suggested that the requirements of the second sentence of paragraph S6.1.3 of the NPRM, which becomes paragraph S6.1.3.2 of the final rule, deal more with photometry than lamp mounting location. We do not agree with this suggestion. This requirement deals with how to consider, for photometry purposes, the individual compartments or lamps of an array that consists of portions on both rigid and non-rigid parts of the vehicle as described in the July 12, 2000, letter of interpretation to Mr. King.[15] Because this provision establishes photometric performance requirements based upon what kind of surface a lamp is mounted upon, its inclusion in the *Mounting location* section is appropriate. We have added a pointing statement in paragraphs S7.1.1.11.1 (front turn signal lamps), S7.1.2.11.1 (rear turn signal lamps), S7.2.11.1 (taillamps), and S7.3.11.1 (stop lamps) in the final rule to direct users to this requirement. Guide also stated that this section should also apply to the rear reflex reflector. However, as stated in several interpretations, reflex reflector requirements must be met by single reflectors, not a combination of separate reflectors. Supporting this position is the May 23, 2003 letter of interpretation to Mr. Babcock [16] as well as the April 14, 2004 letter of interpretation to Mr. Strassburger.[17]

Paragraph S6.1.4, *License plate lamp,* of the NPRM has been relocated to paragraph S6.1.3.3 of the final rule in recognition that it states a requirement for mounting location.

Paragraphs S7.9.1, *Accessibility,* and S7.9.2 *Interior mounting,* (duplication at S6.1.3.2.2 deleted) of the NPRM referring to high-mounted stop lamps (HMSL) were relocated in the final rule to be paragraphs S6.1.3.4.2 and S6.1.3.4.1 respectively. These requirements relate primarily to how the HMSL is mounted to the vehicle, so paragraph S6.1.3 is the most appropriate location in Standard No. 108 for them.

Guide commented that the content of paragraphs S8.1.3 and S8.1.4 of the NPRM, dealing with headlamp beam mounting, belonged in that part of Standard No. 108 related to lamp mounting location. We agree and have moved them intact to become paragraph S6.1.3.5 of the final rule.

Grote, Guide, Innovative, TMA, and TTMA all noted the typographical error in paragraph S6.2.5 of the NPRM. Both the title and text of this section contained the phrase ''* * * auxiliary identification lamp * * *'' which should be ''* * * auxiliary lamp* * *'' The correction has been made in the final rule, and this requirement has been relocated to the *Mounting location*

[14] 70 FR 36094, (June 22, 2005)(Docket No. 2005–21600–1).

[15] *http://isearch.nhtsa.gov/files/21605.ztv.html.*

[16] *http://isearch.nhtsa.gov/files/babcock.ztv.html.*

[17] *http://isearch.nhtsa.gov/files/GF007569–2.html.*

section as paragraph S6.1.3.6, as it states a mounting limitation.

Paragraph S6.1.3.2.1 of the NPRM becomes paragraph S6.1.4.1, *High-mounted stop lamp*, in the final rule. Nissan suggested that the term ''window'' in the text had been defined more precisely in the June 18, 1985 letter of interpretation to Mr. Nakaya [18] as ''glazing'' and suggested use of that term in the final rule. We agree and revised the text accordingly.

Guide commented that paragraph S6.1.5.1 of the NPRM, concerning optional activation of stop lamps by vehicle retarders, duplicated Table I. Upon review, we believe it is a duplication, and we have decided that Table I is the appropriate location for it. Therefore, in the final rule this allowance is included in the *Stop lamp-Device Activation* portion of Tables I-a, I-b, and I-c.

We have relocated to paragraph S6.1.5.1 of the final rule the content of paragraph S6.1.1.4 of the NPRM stating requirements of the hazard warning signal. This is appropriate since, as we noted in our discussion of the definitions of *vehicular hazard warning signal flasher* and *vehicular hazard warning signal operating unit*, the only requirement of this system is simultaneous flashing of sufficient turn signal lamps to meet the turn signal photometric requirements of Standard No. 108.

Another section relocated to S6.1.5, *Activation*, is paragraph S6.1.5.2 of the final rule, which details the requirements for simultaneous activation of lower beam and upper beam headlamps. These requirements had been included as paragraph S8.2 of the NPRM. We agree with the comment of Guide that this content was most appropriately located in the *Activation* section.

We removed paragraph S6.2.3 of the NPRM, which addressed specific requirements for auxiliary lamps performing the function of a required lamp, from the final rule. Grote, Guide, SEMA, and TMA persuaded us that the proposed S6.2.3 contained language that was not faithful to the current version of FMVSS No. 108 and did not add to the understanding of impairment.

Paragraph S14.2 of the NPRM was relocated to be paragraph S6.2.6 of the final rule. This section states the restrictions that apply to equipment in front of a headlamp lens. Paragraph S6.2, *Impairment*, was judged the most appropriate location for it. SEMA suggested revising the language of this section in a way that was inconsistent with the current version of Standard No. 108 by allowing obstructions if some undefined visibility requirement were met. This suggestion would be a substantive change outside the scope of this rewrite project, and, as such, was not adopted in the final rule.

As previously mentioned, paragraph S6.2.4 of the NPRM stating the requirements for DRLs was relocated to be paragraph S6.1.1.4 of the final rule.

The text of paragraph S6.3, *Equipment combinations*, of the final rule remains identical to that of the NPRM.

Paragraph S6.4, titled *Visibility and aiming* in the NPRM, was re-titled *Lens area, visibility and aiming* in the final rule, recognizing the lens area requirements of paragraph S6.4.1. References in paragraph S6.4 to Table IV were revised in the final rule to reference Table IV-a, Table IV-b, or Table IV-c, as appropriate.

AAM and Koito commented that the requirement of a manufacturer to irrevocably certify compliance to one of the visibility options of paragraph S6.4.3 was on a ''lamp function'' basis rather than a ''lamp'' basis as stated in the NPRM. We agree and have revised the text of paragraph S6.4.3 accordingly to bring it in conformity to the final rule [19] establishing these visibility requirements.

Nissan objected to the title of paragraph S6.4.4, *SAE visibility alternative*, of the NPRM stating they did not like the use of the term SAE as part of that title. Considering one of the goals of the FMVSS No. 108 rewrite was to reduce reliance upon third party documents, particularly SAE documents incorporated by reference, we have eliminated ''SAE'' from the paragraph S6.4.4 title in the final rule. The title of this section in the final rule is *Legacy visibility alternative* recognizing that it contains requirements that have long been a part of Standard No. 108.

Nissan also commented that paragraph S6.4.5, *Low-mounted lamps*, duplicated requirements stated in footnotes to Tables V-b, V-c, VI, VII, VIII, IX, XI, XIV, XVI-a, and XVII. We agree with Nissan that these footnotes are the appropriate location for these requirements and have eliminated this subparagraph from the final rule.

The addition of a new Table III to the final rule as a repository for listing the location in the regulatory text of each marking requirement of Standard No. 108 is noted in paragraph S6.5.

AAM and Koito noted that the regulatory requirement identified in paragraph S6.5.1 of the NPRM for the ''DOT'' marking was stated as ''the standard'' rather than ''49 U.S.C. 30115'' as stated in paragraph S7.2(a) of the current version of FMVSS No. 108. We have revised the text of this section in the final rule to be faithful to the existing language.

Paragraph S6.5.2, *DRL marking*, has been revised in the final rule to include the phrase ''* * * on its lens * * *'' after ''DRL'' to be faithful to the marking requirement as stated in paragraph S5.5.11(a)(2) of the current version of FMVSS No. 108.

Several sections of the NPRM containing marking requirements for headlamps have been relocated in their entirety and without revision to paragraph S6.5.3 of the final rule. These include: (1) Proposed paragraph S17.1 which becomes S6.5.3.1; (2) S17.2 which becomes S6.5.3.2; (3) S17.3 which becomes S6.5.3.3 (split into several sections for clarity); and (4) S17.4 which becomes S6.5.3.4 (split for clarity and updated section references). Similarly, proposed paragraph S17.5 summarizing the location of other headlamp marking requirements becomes paragraph S6.5.3.5.

Proposed paragraph S6.6 stating requirements for associated equipment on regulated vehicles has been updated to indicate that the specific requirements for associated equipment are located in paragraph S9 of the final rule.

Proposed paragraph S6.6.1, *License plate holder*, has been redesignated as paragraph S6.6.3 in the final rule due to renumbering of portions of paragraph S6.6 for clarity. AAM objected to this provision as stated previously in our discussion of SAE documents. The clarification that this section applied to *rear* license plate holders appears in the final rule (emphasis added).

Paragraph 6.7, *Replacement equipment*, of the NPRM continues as that paragraph in the final rule. AAM, ASSN, and SEMA noted a typographic error in paragraph S6.7.1.2 where the word ''to'' inadvertently appears in the phrase ''* * * designed so that it does not *to* take the vehicle * * *'' (emphasis added). This error was corrected by removing that word from paragraph S6.7.1.2 of the final rule. SEMA commented that the language of paragraph S6.7 ''* * * infers that the standard would not preclude the installation of newer technologies on older vehicles and there is no suggestion that the introduction of lighting equipment into the marketplace is tied to vehicle manufacturer certification,''

[18] *http://isearch.nhtsa.gov/gm/85/1985–02.42.html*

[19] 69 FR 48805 (August 11, 2004) (Docket No. 2004–18794).

and requested confirmation of this assumption by a response to its letter of December 16, 2005 requesting an interpretation by the Chief Counsel. SEMA's comment sought clarification of a notice of interpretation published in the **Federal Register** on November 1, 2005 [20] rather than addressing the substance of the rewrite of Standard No. 108, and, thus, was beyond the scope of the rewrite. We note that SEMA's concern was addressed by the agency in an August 24, 2006 letter of clarification.[21]

In its comments, ASSN objected to the inclusion of the second sentence of paragraph S6.7.1.2 of the NPRM which states in part, ''* * * the determination of whether a vehicle would be taken out of compliance with this standard when an individual device is installed on the vehicle is made without regard to whether additional devices, including separate lamps or reflective devices sold together with the device, would also be installed.'' Its contention is that this language which ''converts its informal interpretation into a formal rule'' was included in the rewrite of FMVSS No. 108 without ''the required cost benefit analysis'' and would limit the ''opportunities for vehicle personalization.'' The incorporation of the replacement equipment interpretation of 70 FR at 65972, or any interpretation, does not constitute a change in the requirements of the standard. An interpretation simply clarifies the existing requirements of the standard and as such does not require the cost-benefit analysis or other rulemaking formalities as ASSN suggested. Regulated parties are bound by the regulatory requirements regardless of whether they are expressed in the regulatory text or in interpretations either by letter or publication. A vehicle owner can continue to modify the lighting on his vehicle, including obtaining devices for that purpose from regulated parties such as vehicle dealers, so long as the vehicle continues to meet the requirements of FMVSS No. 108 and the replacement lighting equipment provides all regulated functions of the device being replaced in a single unit.

Grote also commented on paragraph S6.7, requesting that the provisions of paragraph S6.7.1.2 not be applicable to heavy vehicles. Grote was concerned that a replacement lamp, reflective device, or item of associated equipment which is designed or recommended for particular vehicle models must be designed per S6.7.1.2 so that it does not take the vehicle out of compliance with this standard when the individual device is installed on the vehicle. Grote suggested that in the heavy vehicle market that it primarily serves, an owner of a fleet of heavy vehicles may elect to remove the original equipment lamps and reflective devices and replace them with equally compliant lamps and devices but in different functional combinations. That means, for example, one of a set of original equipment lamps installed on a particular vehicle may contain the stop lamp, taillamp, and side marker lamp function, while the other separate lamp contains the turn signal lamp, backup lamp, and reflex reflectors. Grote would like to be able to recommend a set of replacement lamps for this vehicle where the individual lamps of the set do not have the required functions grouped in exactly the same combinations as those of the original equipment set.

Grote believes that it should be permissible to do this because the agency stated in the interpretation [22] published in the **Federal Register** on November 1, 2005 that, ''* * * while our interpretation of S5.8.1 [of the current version of FMVSS No. 108] is not dependent on the size of the vehicle for which a lamp is intended, it has a more limited application to aftermarket lighting equipment for heavy vehicles than to light vehicles.'' However, the agency continued the discussion by stating, ''The specific context of the questions asked by Calcoast was aftermarket combination lamps for light vehicles, such as passenger cars. These lamps are typically designed for specific models and can only be installed on those models in the same location as the lamps they replace. However, for heavy vehicles, lighting equipment is often generic and not designed for specific models. Truck-Lite, for example, commented on our notice of draft interpretation that it sells many kinds of lighting devices through catalog sales to hundreds of vehicle manufacturers whose equipment it has no way of knowing about. Consistent with our discussion in the October 2004 notice of interpretation, we note that our interpretation does not mean that the manufacturer of generic lighting equipment has the responsibility for ensuring correct selection and installation of its equipment. On the other hand, under our interpretation, a manufacturer of aftermarket lighting equipment could not design or recommend lighting equipment for a specific vehicle if the vehicle manufacturer could not have certified the vehicle using that lighting equipment instead of the lighting equipment it actually used.'' We did not suggest in this interpretation that when we spoke of a ''more limited application'' in reference to heavy vehicles, we intended to treat replacement lamps and reflective devices for heavy vehicles significantly different than those for light vehicles. We were merely pointing out that we did not consider manufacturers of generic lighting equipment responsible for ensuring the correct selection and installation of their equipment. Therefore, with the exception of the previously mentioned typographical error correction, paragraph S6.7 in the final rule is identical to that of the NPRM.

Proposed paragraph S6.8 of the NPRM has been relocated to be part of paragraph S14 of the final rule. Substantive issues raised in the public comments to the NPRM will be discussed in paragraph S14.

S7 Signal Lamp Requirements

Paragraph S7 of the NPRM contained specific requirements for signal lamps, reflective devices, and associated equipment. With the reorganization of the final rule, only the signal lamp requirements remain in S7. In some cases, the order of appearance of specific lamp types in S7 has changed from the NPRM.

As previously mentioned, we have partially adopted the request of ASSN/AAM concerning the format of individual lamp sections. We have modified the individual signal lamp sections so that a series of specific types of requirements are listed for each lamp in the same order in a ''template'' format. These requirements, in order, are: (1) *Number*, (2) *Color of light*, (3) *Mounting location*, (4) *Mounting height*, (5) *Activation*, (6) *Markings*, (7) *Effective projected luminous lens area*, (8) *Visibility*, (9) *Indicator*, (10) *Spacing to other lamps*, (11) *Multiple compartment and multiple lamps*, and (12) *Ratio*. These are followed by sections on *Photometry* and *Physical tests*. In many cases, the text following one of these types of requirements will ''point'' to a table or another section of the standard. Also, there are numerous instances where the specific lamp has no performance requirement for a category, and the text states ''No requirement.''

References to physical tests applicable to signal lamps contained in Table XXII of the NPRM have been revised in the final rule to refer to paragraphs S14.4 and S14.5.

[20] 70 FR 65972 (Nov. 1, 2005) (Docket No. NHTSA 03–15651).

[21] *http://isearch.nhtsa.gov/files/SEMA.htm*

[22] 70 FR 65972 (Nov. 1, 2005).

Paragraph S7.1 of the final rule continues to contain the requirements for turn signal lamps. Paragraph S7.1.1.3 of the NPRM, addressing multiple compartment and multiple front turn signal lamps, becomes paragraph S7.1.1.11 in the final rule and has been split for clarity. In this section, Nissan stated that the term ''compartments'' after the word ''three'' was incorrectly plural; it has been changed to singular form in the final rule.

As mentioned in the discussion of definitions, we replaced the term ''functional lighted area'' in paragraph S7.1.1.2.2 of the NPRM (paragraph S7.1.1.10.3 in the final rule), with the equivalent term ''effective projected luminous lens area.'' Since this paragraph was the only instance in Standard No. 108 where the term ''functional lighted area'' was used, it was eliminated from the definition of ''Effective projected luminous lens area'' in the final rule.

Calcoast objected to the language of paragraph S7.1.1.3.1 of the NPRM which stated, ''* * * overall width must meet the photometric requirements specified for a single section and not * * *'' photometric requirements for lamps installed on vehicles 2032 mm or more in overall width. In the final rule, we have changed this language in paragraph S7.1.1.11.4 to be faithful to the language of paragraph S5.1.1.12 of the current version of FMVSS No. 108. It now states, ''* * * overall width require measurement of the photometrics for the entire lamp and not.* * *'' This same issue was raised concerning rear turn signal lamps and stop lamps. Therefore, similar changes were made in paragraph S7.1.2.11.4 of the final rule for rear turn signal lamps and in paragraph S7.3.11.4 for stop lamps.

Paragraph S7.1.1.3.2 of the NPRM (containing requirements for the ratio between the photometric intensity of a front turn signal lamp and that of a parking lamp or clearance lamp where optically combined) has become paragraph S7.1.1.12 in the final rule and has been split for clarity.

Paragraph S7.1.2.2 of the NPRM (addressing multiple compartment and multiple rear turn signal lamps) becomes paragraph S7.1.2.11 in the final rule and has been split for clarity. Once again, Nissan stated that in this section, the term ''compartments'' after the word ''three'' was incorrectly plural; it has been changed to singular form in the final rule.

Paragraph S7.1.2.3 of the NPRM (containing requirements for the ratio between the photometric intensity of a rear turn signal lamp and that of a taillamp or clearance lamp where optically combined) becomes paragraph S7.1.2.12 in the final rule and has been split for clarity.

Paragraph S7.2.1.1 of the NPRM (addressing multiple compartment and multiple taillamps) becomes paragraph S7.2.11 in the final rule and has been split for clarity. Again, Nissan stated that in this section the term ''compartments'' after the word ''three'' was incorrectly plural; it has been changed to singular form in the final rule. Also, AAM and Koito commented that there was an incorrect reference to Table VII instead of Table VIII in the NPRM; this has been corrected in the final rule.

Paragraph S7.2.12, *Ratio*, has been added in the final rule to point to the ratio requirements for rear turn signal lamps and stop lamps optically combined with taillamps.

Paragraph S7.3.1.1 of the NPRM (addressing multiple compartment and multiple stop lamps) becomes paragraph S7.3.11 in the final rule and has been split for clarity. Again, Nissan stated that in this section the term ''compartments'' after the word ''three'' was incorrectly plural; it has been changed to singular form in the final rule.

Paragraph S7.3.1.2 of the NPRM (containing requirements for the ratio between the photometric intensity of a stop lamp and that of a taillamp where optically combined) becomes paragraph S7.3.12 in the final rule and has been split for clarity.

Koito commented about the limitation of the application of reduced photometry requirements of paragraph S7.4.1.1 of the NPRM to side marker lamps installed on vehicles less than 80 inches wide. This limitation is consistent with Table 1, footnote ''b'' of SAE J592e. A more comprehensive discussion of this issue is part of the section on SAE documents in this final rule.

Paragraph S7.5.12, *Ratio*, has been added in the final rule to point to the ratio requirements for front and rear turn signal lamps optically combined with clearance lamps.

Paragraphs S7.7.2, *Photometry*, and S7.7.1, *Installation*, of the NPRM (applicable to license plate lamps) have been split for clarity as paragraphs S7.7.13 and S7.7.15 respectively, in the final rule.

A reference to new Figure 20, *License Plate Lamp Measurement of Incident Light Angle*, was added to paragraph S7.7.15.4 of the final rule (paragraph S7.7.1.1 in the NPRM.)

Paragraphs S7.9.1, *Accessibility*, and S7.9.2, *Installation*, of the NPRM (applicable to high-mounted stop lamps) were relocated in the final rule to be paragraphs S6.1.3.4.2 and S6.1.3.4.1, respectively.

Guide commented that paragraph S7.11.2.2(c) of the NPRM should be relocated to the DRL activation portion of Table I-a. We disagree. This requirement, which becomes paragraph S7.10.10.1(c) in the final rule, only specifies activation and deactivation of the DRL when the turn signal is activated on a vehicle where the DRL is in close proximity to a turn signal lamp. Given these constraints of limited application, its present placement in the final rule is the most appropriate location. A statement in the DRL activation portion of Table I-a does point to paragraph S7.10.10.1(c) to also alert users to this requirement.

S8 Reflective Device Requirements

Requirements for reflex reflectors located in paragraph S7.10 of the NPRM have been relocated to paragraph S8.1 in the final rule. Paragraphs S8.1.1 through S8.1.10 are categorized identically to the organizational template of signal lamps. However, a section covering multiple compartment lamp and multiple lamps and a section covering ratio are clearly not applicable to reflex reflectors and are not included. Paragraph S8.1.11, *Photometry*, replaces paragraph S7.10.1 of the NPRM, while paragraph S8.1.12, *Physical tests*, replaces paragraph S7.10.2 and paragraph S8.1.13, *Alternative reflex material*, replaces paragraph S7.10.1.1.

References to physical tests applicable to reflex reflectors contained in Table XXII of the NPRM have been revised in the final rule to refer to paragraphs S14.4 and S14.5.

The final rule combines the content of paragraph S7.12 and Table III of the NPRM into paragraph S8.2. Specifically, proposed paragraph S7.12 becomes paragraph S8.2, proposed paragraph S7.12.1 becomes paragraph S8.2.1, *Retroreflective sheeting*, (split for clarity), and proposed paragraph S7.12.1.1 becomes paragraph S8.2.1.3, *Certification marking*.

Following this, the text of the proposed *Application pattern-Alternating red and white materials-Retroreflective sheeting* box of Table III is stated as paragraph S8.2.1.4, the text of the proposed *Application location-Retroreflective sheeting* box of Table III is stated as paragraph S8.2.1.5, and the text of the proposed *Application spacing-Retroreflective sheeting* box of Table III is stated as paragraph S8.2.1.6.

3M commented that they believe that the use of the phrase ''* * * material is required to be installed * * *'' in both

the requirements for *Application pattern-Retroreflective sheeting* and *Application pattern-Conspicuity reflex reflectors* implies that there is only one method of meeting conspicuity requirements, not two alternative methods. To increase clarity of these alternative requirements, we have revised the first sentence of the *Alternating red and white materials-Retroreflective sheeting*, (now paragraph S8.2.1.4.1) requirement to read ''* * * where alternating material is installed * * *'' We have also eliminated the phrase ''Where alternating color material is required to be installed'' from the beginning of the first sentence of *Alternating red and white materials-Conspicuity reflex reflectors* section (now paragraph S8.2.2.2.1).

3M also commented that the language in the *Application pattern-White material-Conspicuity reflex reflectors* section (paragraph S8.2.2.2.2 of the final rule) discussing the dimensional relationship between adjacent white conspicuity reflex reflectors would be more appropriately included in the *Application location* portion. We disagree because the requirements in the *Application location* portion refer to the location of the material on the vehicle while the requirements in the Application pattern portion only refer to the location of a reflector to an adjacent reflector.

AAM commented that the language of the *Application location-Retroreflective sheeting* portion begins with the phrase ''Not permitted * * *'' which imposes a different requirement than paragraph S5.7.1.4 of the current version of FMVSS No. 108 which states ''* * * but need not be applied * * *'' We agree and have revised the requirement of the *Application location-Retroreflective sheeting* (now paragraph S8.2.1.5 in the final rule) to begin, ''Need not be installed, as illustrated in Figure 12–2, * * *''

Proposed paragraph S7.12.1.2, *Photometry*, becomes paragraph S8.2.1.7 in the final rule with no substantive changes. The photometry requirements reference was updated to Table XVI–c and the photometry test procedure reference to paragraph S14.2.3.

Proposed paragraph S7.12.2, *Conspicuity reflex reflectors*, becomes paragraph S8.2.2 and proposed paragraph S7.12.1, *Certification marking*, becomes paragraph S8.2.2.1 in the final rule.

Following this, the text of the proposed *Application pattern-Alternating red and white material-Conspicuity reflex reflectors* box of Table III is stated as paragraph S8.2.2.2.1 and the proposed *Application pattern-White material-Conspicuity reflex reflectors* box of Table III is stated as paragraph S8.2.2.2.2. Regarding retroreflective sheeting, we have addressed the previously noted 3M comment about alternative methods of meeting conspicuity requirements by eliminating the phrase ''Where white material is required to be installed'' from the beginning of the first sentence of the *Application pattern-White material-Conspicuity reflex reflectors* (now paragraph S8.2.2.2.2) section.

Proposed paragraph S7.12.2.2, *Photometry*, has become paragraph S8.2.2.3 (split for clarity) in the final rule.

Paragraph S8.2.3 of the final rule contains the requirements for conspicuity systems installed on trailers that were part of Table III in the NPRM. Paragraph S8.2.3.1 (split for clarity) includes the requirements for the three conspicuity elements required on the rear of a trailer and paragraph S8.2.3.2 (split for clarity) states requirements for the alternating color side conspicuity treatment required on trailers.

AAM requested that the specific grades of sheeting permitted be mentioned in the requirements for *Trailer rear-Element 2-white*, now in paragraph S8.2.3.1.2.1. Therefore, we have inserted the phrase ''* * * of Grade DOT–C2, DOT–C3, or DOT–C4 * * *'' between the word ''long'' and the word ''applied'' in the first sentence making the language of the requirement faithful to that of paragraph S5.7.1.4.1(b) of the current version of FMVSS No. 108.

TTMA commented that certain tank trailers may not have a vertical surface suitable for installing the *Trailer side-alternating red and white materials* conspicuity material between 375 mm and 1525 mm above the road surface. If installed in a downward orientation, it would not be effective for its purpose. The requirement of this section states that the material must be installed in this height range if practicable and going beyond this range is permitted if it aids correct orientation. We believe that the language of paragraph S8.2.3.2.1 of the final rule, along with the illustrative examples of conspicuity treatment applied to tank trailers shown in Figure 11, adequately addresses this issue.

Paragraph S8.2.4 of the final rule contains the requirements for conspicuity systems installed on truck tractors, which was part of Table III in the NPRM. Paragraph S8.2.4.1 (split for clarity) contains requirements for Element 1 (alternating color) and paragraph S8.2.4.2 (split for clarity) states the requirements for Element 2 (white). One mounting alternative for conspicuity treatment requirements in *Truck tractor-Element 1* was inadvertently omitted from the NPRM. This material is allowed to be mounted to ''plates attached to the mudflap support brackets'' as stated in the current version of FMVSS No. 108 at paragraph S5.7.1.4.3(a). We have inserted this alternative mounting location after ''mudflap support brackets'' and before ''or on the mudflaps'' in paragraph S8.2.4.1.1 of the final rule.

S9 Associated Equipment Requirements

Section 7.14 of the NPRM, *Associated equipment requirements*, is relocated to paragraph S9 in the final rule.

Koito and Nissan commented that the first sentence of paragraph S7.14.1 of the NPRM, now paragraph S9.1.1 of the final rule, virtually duplicated the definition of *Turn signal operating unit* in S4. We agree and removed that sentence from paragraph S9.1.1. Paragraph S9.1.2 of the final rule states that turn signal operating units must meet the applicable performance requirements of paragraph S14.9. These references are to paragraph S6.6 and Table XXI in the NPRM.

Similarly, the first sentence of paragraph S7.14.2 of the NPRM, now paragraph S9.2.1 of the final rule, virtually duplicated the definition of *Turn signal flasher* in S4. We removed that sentence from paragraph S9.2.1. Paragraph S9.2.2 of the final rule states that turn signal flashers must meet the applicable performance requirements of paragraph S14.9. These references are to paragraph S6.6 and Table XXI in the NPRM.

In the NPRM, paragraph S7.14.3 stated requirements for the turn signal pilot indicator. These requirements have been relocated to paragraph S9.3 (split for clarity) in the final rule. Paragraph S7.14.3.1 of the NPRM described the turn signal pilot indicator size and color requirements. These requirements were erroneously based on paragraph 5.4.3 of SAE J588 NOV84, *Turn Signal Lamps for use on Motor Vehicles less than 2032 mm in Overall Width*. These requirements should have been based upon paragraph 4.5 of SAE J588e, *Turn Signal Lamps*, September 1970, as specified by paragraph S5.5.6 of the current version of FMVSS No. 108. We have stated the correct requirements in paragraph S9.3.4 of the final rule. These corrected requirements include a visibility requirement that references SAE J941b, *Motor Vehicle Driver's Eye Range*, February 1969, rather than the incorrect reference to SAE J1050,

Describing and Measuring the Driver's Field of View, which was included in the NPRM.

The incorporation in paragraph S7.14.3.2 of the NPRM of the language from the incorrect version of SAE J588 also caused the description of the modes of indication of the turn signal pilot indicator to be omitted as noted in the comments from AAM. We have corrected this in the final rule by inserting the phrase ''* * *by a ''steady on'', ''steady off'', or by a significant change in the flashing rate* * *'' into the text of paragraph S9.3.6.

We also neglected in the NPRM to cite the reason for our use of the failure indication criteria of ''* * *minimum photometric performance specified in Tables VI or VII* * *'' rather than the text of paragraph S5.5.6 of the current version of FMVSS No. 108, which states that criteria as ''Failure of one or more turn signal lamps to operate* * *.'' The language incorporated in the NPRM came from the July 10, 1998 letter of interpretation to Mr. Binder.[23] In that interpretation, the issue of how to indicate to the driver the failure of a turn signal lamp that consisted of a number of LED light sources was discussed. The failure indication criteria for this situation was stated in Binder in this way, ''*If a light source fails in a turn signal lamp on a vehicle that is not equipped to tow a trailer, Standard No. 108 requires that the failure be indicated to the driver. We are not aware of any LED turn signals in use, or how manufacturers would design such a unit to comply with this requirement. However, we believe that a failure should be indicated to the driver at the point where an LED turn signal ceases to furnish the minimum photometric performance required by Standard No. 108.*'' The statements in the Binder interpretation also apply to turn signal lamps using conventional incandescent light sources. If a turn signal lamp using an incandescent light source fails, it obviously has zero photometric output. Therefore, we adopted the language of Binder in the NPRM but omitted mention of it as one of the incorporated interpretations. We are correcting that omission here and are preserving the failure indication criteria of the NPRM in paragraph S9.3.6 of the final rule.

Paragraphs S7.14.4, *Headlamp beam switching device*, and S7.14.4.1, *Semi-automatic headlamp beam switching device*, of the NPRM, were re-designated as paragraphs S9.4 and S9.4.1, respectively, in the final rule. Paragraph S9.4.1.4 of the final rule, which was paragraph S7.14.4.1.4 in the NPRM, had a second sentence added to it which states, ''The device shall not affect the function of the upper beam indicator light.'' which was inadvertently omitted from the NPRM. This requirement comes from paragraph 4.14 of SAE J565b, *Semiautomatic Headlamp Beam Switching Devices*, February 1969, which is incorporated by reference in the current version of FMVSS No. 108.

Paragraph S9.4.1.7 of the final rule states that semi-automatic headlamp beam switching devices must be designed to conform to the performance requirements of paragraph S14.9. These references are to paragraph S6.6 and Table XXI in the NPRM.

Paragraphs S7.14.5 *Upper beam headlamp indicator*, and S7.14.5.1 *Indicator size, location, and color*, of the NPRM, become paragraphs S9.5 and S9.5.1, respectively, in the final rule. However, the term ''color'' and the last sentence of paragraph S7.14.5.1 stating that the color of the indicator need not be red were deleted from paragraph S9.5.1. By removing this language and making Standard No. 108 silent about the color of the upper beam headlamp indicator, we have simplified the manner in which the requirement is presented. The current version of FMVSS No. 108 states in paragraph S5.5.2 that, ''Each vehicle shall have a means for indicating to the driver when the upper beams of the headlamps are on that conforms to SAE Recommended Practice J564a, April 1964, except that the signal color need not be red''. The second paragraph of SAE J564a states that ''* * *The upper beam indicator should consist of a red light* * *.'' As noted in the comments of AAM, we incorporated in the NPRM the requirements of SAE J564a directly into the text of the Standard No. 108 without including the red color requirement because of the noted exclusion. However, we neglected to remove the excluding language from the NPRM. We are doing so in the final rule.

Koito and Nissan commented that the first sentence of paragraph S7.14.6 of the NPRM, now paragraph S9.6.1 of the final rule, virtually duplicated the definition of *Vehicular hazard warning signal operating unit* in S4. We agree and removed that sentence from paragraph S9.6.1. Paragraph S9.6.3 of the final rule states that vehicular hazard warning signal operating units must meet the applicable performance requirements of paragraph S14.9. These references are to paragraph S6.6 and Table XXI in the NPRM.

Similarly, the first sentence of paragraph S7.14.7 of the NPRM, now paragraph S9.7.1 of the final rule, virtually duplicated the definition of *Vehicular hazard warning signal flasher* in S4. We removed that sentence from paragraph S9.7.1. Paragraph S9.7.2 of the final rule states that vehicular hazard warning signal flashers must meet the applicable performance requirements of paragraph S14.9. These references are to paragraph S6.6 and Table XXI in the NPRM.

Requirements for the vehicular hazard warning signal pilot indicator from paragraph S7.14.8 of the NPRM are relocated intact to paragraph S9.8 (split for clarity) in the final rule. AAM commented that a vehicular hazard warning signal pilot indicator was not required by FMVSS No. 108. We direct AAM's attention to SAE J910, *Vehicular Hazard Warning Signal Operating Unit*, January 1966, specifically paragraph 5. When we removed J910 as a referenced document in the NPRM, we incorporated the requirements of paragraph 5 into paragraph S7.14.8, which we are now designating as paragraph S9.8 in the final rule. [24]

S10 Headlighting System Requirements.

The headlighting system requirements of S8 of the NPRM become S10 of the final rule.

Paragraph S8.1 of the NPRM is now paragraph S10.1 (split for clarity) in the final rule. Guide commented that paragraphs S8.1.1 and S8.1.2 of the NPRM were redundant with the requirement, of paragraph S8.1, that the headlighting system conforms to one of the systems of Table II. We agree and eliminated paragraphs S8.1.1 and S8.1.2 from the final rule.

We mentioned previously in the discussion of mounting location requirements that Guide commented that the content of sections 8.1.3 and 8.1.4 of the NPRM, dealing with headlamp beam mounting, was most appropriately located in the lamp mounting location section. We agree and have moved them intact to become paragraph S6.1.3.5 of the final rule.

Paragraph S8.1.5, *Headlamp adjustments*, of the NPRM was relocated to be paragraphs S10.18.1.1 and S10.18.1.2 of the final rule.

We adopted, in S10 of the final rule, the ASSN/AAM suggested standard format similar to that of the signal lamp and reflex reflector sections. Those standardized criteria that apply to headlamps with the appropriate

[23] *http://isearch.nhtsa.gov/files/18121.ztv.html*

[24] SAE J945, Vehicular Hazard Warning Signal Flasher, February 1966 incorporated by reference in the current version of FMVSS No. 108 also discusses a visible pilot indicator for the vehicular hazard warning signal. The test condition requirement of S9.8.3 of the final rule comes from J945.

pointing statements or ''no requirement'' notations become paragraphs S10.3 through S10.12 of the final rule.

The requirements for a sealed beam headlighting system, which were S9 of the NPRM, become paragraph S10.13 in the final rule. Paragraphs S9 and S9.1 of the NPRM have been relocated intact to become paragraphs S10.13 and S10.13.1 respectively in the final rule. The simultaneous aim requirements for type ''F'' sealed beam headlamps, which were paragraph S9.2 in the NPRM, become S10.13.2 in the final rule, the only revision being the revised reference for the applicable photometry procedure. Paragraph S9.3, *Photometry*, of the NPRM becomes paragraph S10.13.3 in the final rule, again with a revised reference to the photometry procedure. The physical tests requirements of paragraph S9.4 of the NPRM, which referenced Tables XXII and XXIII, become paragraph S10.13.4 (split for clarity) in the final rule, with updated references to the applicable test procedures and performance requirements in paragraph S14.

The requirements for an integral beam headlighting system that were paragraph S10 of the NPRM become paragraph S10.14 in the final rule. Paragraphs S10 and S10.1 of the NPRM have been relocated to be paragraphs S10.14 and S10.14.1, respectively, in the final rule, with the only revision being the substitution of the term ''activated'' for the term ''mechanized'' used in the NPRM. Paragraphs S10.2, S10.3, and S10.4 of the NPRM have been relocated to become paragraphs S10.14.2 (split for clarity), S10.14.3, and S10.14.4 respectively in the final rule.

AAM and Koito both commented that the language in paragraph S10.5 (repeated in paragraph S11.3) of the NPRM, stating that, ''An integral beam (replaceable bulb in paragraph S11.3) headlamp may incorporate replaceable light sources that are used for purposes other than headlighting'', could be interpreted to mean those ''replaceable light sources'' defined in S4 of the NPRM. This language came from paragraphs S7.4(i) and S7.5(j) of the current version of Standard No. 108. To alleviate concerns that this incorrect interpretation could be applied, we have revised the language of paragraph S10.5 (and paragraph S11.3) of the NPRM. Paragraph S10.14.5 (and paragraph S10.15.5) of the final rule now states, ''An integral beam (replaceable bulb in paragraph S10.15.5) headlamp may incorporate light sources that are used for purposes other than headlighting and are capable of being replaced.''

Paragraph S10.6, *Photometry*, of the NPRM becomes paragraph S10.14.6 in the final rule, with a revised reference to the photometry procedure. The physical test requirements of paragraph S10.7 of the NPRM, which referenced Table XXII and Table XXIII, become paragraph S10.14.7 (split for clarity) in the final rule, with updated references to the applicable test procedures and performance requirements in paragraph S14.

The requirements for a replaceable bulb headlighting system, which were paragraph S11 of the NPRM, become paragraph S10.15 in the final rule. Paragraph S11 of the NPRM has been relocated intact to be paragraph S10.15 in the final rule. Koito commented that the language of paragraph S11.1 of the NPRM stating, ''* * *must consist of the correct number of designated headlamp units shown for* * *'' did not clearly express the requirement. We agree and have revised this phrase to, ''* * *must consist of either two or four headlamps shown for* * *'' in paragraph S10.15.1 of the final rule.

Paragraph S11.2 of the NPRM becomes paragraph S10.15.2 in the final rule. Paragraph S11.4 of the NPRM has the phrase ''* * *be designed to* * *'' inserted before the word ''conform'' when it becomes paragraph S10.15.3 of the final rule.

Paragraph S11.5 of the NPRM is relocated to become paragraph S10.14.4.1 of the final rule. It is supplemented by a new paragraph S10.15.4.2 stating the exception from the requirements of paragraph S10.14.4.1 (that were contained in paragraphs S7.5(d)(3)(i)(A) and S7.5(d)(3)(ii)(A) of the current version of FMVSS No. 108), which was omitted from the NPRM, as noted in the comments of Guide and Koito.

As previously mentioned, paragraph S11.3 of the NPRM was revised for clarity and becomes paragraph S10.15.5 in the final rule.

Paragraph S11.6, *Photometry*, of the NPRM becomes paragraph S10.15.6 in the final rule, with a revised reference to the photometry procedure. The physical tests requirement of paragraph S11.7 of the NPRM, which referenced Table XXII and Table XXIII, becomes paragraph S10.15.7 (split for clarity) in the final rule, with updated references to the applicable test procedures and performance requirements in paragraph S14.

The requirements for a combination headlighting system that were S12 of the NPRM become paragraph S10.16 in the final rule. Paragraphs S12 and S12.1 of the NPRM have been relocated to be paragraphs S10.16 and S10.16.1, respectively, in the final rule, with the only revision being the substitution of the term ''activated'' for the term ''mechanized'' used in the NPRM.

Paragraph S12.2, *Photometry*, of the NPRM becomes paragraph S10.16.2 in the final rule, with a revised reference to the photometry procedure. The physical test requirements of paragraph S12.3 of the NPRM, which referenced Table XXII and Table XXIII, become paragraph S10.16.3 (split for clarity) in the final rule, with updated references to the applicable test procedures and performance requirements in paragraph S14.

The requirements for a motorcycle headlighting system that were S13 of the NPRM become paragraph S10.17 in the final rule. Paragraphs S13.1, S13.1.1 (split for clarity), S13.1.2 (split for clarity), and S13.1.3 (split for clarity) of the NPRM are relocated intact to become paragraphs S10.17.1, S10.17.1.1, S10.17.1.2, and S10.17.1.3, respectively, of the final rule. Paragraph S13.4 of the NPRM becomes paragraph S10.17.2 of the final rule.

Paragraph S13.2, *Photometry*, of the NPRM becomes paragraph S10.17.3 in the final rule, with a revised reference to the photometry procedure. The physical test requirements of paragraph S13.3 of the NPRM, which referenced Table XXII, become paragraph S10.17.5 in the final rule, with updated references to the applicable test procedures and performance requirements in paragraph S14.

Paragraphs S13.5.1, *Modulation*, S13.5.2, *Replacement modulators*, S13.5.2.1, *Replacement performance*, and S13.5.2.2, *Replacement instructions*, of the NPRM are relocated intact to become paragraphs S10.17.5.1, S10.17.5.2, S10.17.5.2.1, and S10.17.5.2.2, respectively, in the final rule.

Headlamp aimability requirements that were located in S14 in the NPRM have been relocated to paragraph S10.18 in the final rule with one exception and with very few revisions. The exception is proposed paragraph S14.2 dealing with equipment in front of a headlamp lens. The requirements of this section were moved to paragraph S6.2.6 in the *Impairment* section of the final rule.

Paragraph S14.8.2 of the NPRM, which becomes paragraph S10.18.7.2 of the final rule, contains requirements for use of nonadjustable headlamp aiming device locating plates for five types of sealed beam headlamps. The language in the NPRM stated that these units should incorporate lens-mounted aiming pads specified in Figures a, b, c, d, or e of the NPRM. The figures referred to were intended to be placeholders in

a draft version of the NPRM. The NPRM should have stated that, ''* * * incorporate lens-mounted aiming pads as specified for those units in Appendix C of part 564 of this chapter,'' which is incorporated in paragraph S10.18.7.2 of the final rule.

Koito requested that an alternative measurement distance of 25 m be permitted for the measurement of the cutoff parameter for a visually/optically aimed headlamp. Paragraph S14.10.1.5 of the NPRM, based upon the April 6, 2000 letter of interpretation to Mr. Spingler,[25] required the measurement distance to be 10 m. One of the objectives of the rewrite of Standard No. 108 is to improve the clarity of the document without changing the substance of the existing requirements. The referenced letter of interpretation states a specific measurement distance without alternatives. Therefore, Koito's request would be a substantive change beyond the scope of the rewrite and paragraph S10.18.9.1.5 of the final rule duplicates the requirement from the NPRM.

S11 Replaceable Light Source Requirements

Paragraph S15 of the NPRM, *Replaceable light source requirements*, is relocated to S11 in the final rule. Paragraphs S15 and S15.1 from the NPRM become paragraphs S11 and S11.1, respectively, in the final rule. Paragraph S15.4, *Ballast markings*, of the NPRM becomes paragraph S11.2 in the final rule and paragraph S15.5, *Gas discharge laboratory life*, becomes paragraph S11.3. Paragraph S15.6 of the NPRM, containing requirements for physical tests of replaceable light sources, is split into paragraphs S11.4.1 and S11.4.2 in the final rule. Paragraph S11.4.1 references the deflection test and pressure test applicable to replaceable light sources, which were part of Table XXIII in the NPRM and have been relocated to paragraph S14.7 in the final rule. Paragraph S11.4.2 references a restated power and flux measurement test that is described in paragraph S14.7.3 of the final rule, noting that the performance requirements for this test do not reside in the main text of Standard No. 108, but in the applicable appendix of part 564 of this chapter.

The NPRM contained paragraphs S15.2 and S15.3, both titled *Power and flux measurement*, which essentially described the same test of replaceable light sources. Recognizing that they were test procedures and striving to advance the objectives of the rewrite, we consolidated the procedures of paragraphs S15.2 and 15.3 into a single procedure, without revising or modifying the requirements, and relocated it to paragraph S14.7.3 of the final rule.

S12 Headlamp Concealment Device Requirements

The headlamp concealment device requirements of S16 of the NPRM are relocated intact to S12 of the final rule.

S13 Replaceable Headlamp Lens Requirements

The replaceable headlamp lens requirements of paragraph S18 of the NPRM are relocated intact (split for clarity) to paragraph S13 of the final rule.

S14 Physical and Photometry Test Procedures and Performance Requirements

As previously mentioned, ASSN/AAM and Grote commented that tables containing significant amounts of text, such as the test requirements in Tables XXI, XXII, and XXIII of the NPRM, are difficult to use because of lengthy passages that contain several sentences and express several unique test conditions or requirements. We agree with these comments. In the final rule, we have moved virtually all test procedures and their associated performance requirements to S14.

General test procedures and performance requirements that were located in paragraph S6.8 of the NPRM have been placed in paragraph S14.1 of the final rule. Similarly, the photometric test procedures of paragraph S6.8 of the NPRM are now paragraph S14.2 of the final rule.

Part of Table XXII of the NPRM, the out of focus test applicable to motorcycle headlamps designed to conform to paragraph S10.17(b), becomes paragraph S14.3 in the final rule. The color test and plastic optical materials test of Table XXII become paragraph S14.4 in the final rule. The remaining tests of Table XXII, the vibration test, moisture test, dust test, and corrosion test, become paragraph S14.5 in the final rule.

All tests applicable to complete headlamps included in Table XXIII of the NPRM have been relocated to paragraph S14.6 of the final rule. The tests in Table XXIII of the NPRM related to replaceable light sources become paragraph S14.7 in the final rule. Tests in Table XXIII of the NPRM that apply to vehicle headlamp aiming devices (VHAD) were relocated to be paragraph S14.8 in the final rule. Also, the tests applicable to associated equipment that were located in Table XXI of the NPRM become paragraph S14.9 in the final rule.

S6.8.1 of the NPRM, stating that lamps, reflective devices, and associated equipment regulated by Standard No. 108 be designed to conform to applicable physical test requirements, becomes paragraph S14.1.1 of the final rule. This is followed by proposed paragraphs S6.8.4 and S.8.4.1 of the NPRM, applicable to plastic optical materials, which become paragraphs S14.1.2 and S14.1.3, respectively, in the final rule. Bayer had asked that the word ''reflex'' be placed before the word ''reflector'' in paragraph S14.1.2 but we prefer to keep the language faithful to paragraph S5.1.2 of the current version of Standard No. 108. Paragraph S14.1.4, *Samples*, of the final rule is paragraph S6.8.2 (split for clarity) of the NPRM, except for the sentence ''A mounting bracket with a sample headlamp installed must not have a resonant frequency in the 10–55 Hz. range'' which was relocated to paragraph S14.6.8.1 in the final rule because of its specific applicability to the vibration test for headlamps. Paragraph S6.8.3 of the NPRM is now paragraph S14.1.5 of the final rule.

Paragraph S6.8.5 of the NPRM becomes paragraph S14.2, *Photometric test procedures*, in the final rule. Paragraph S6.8.5.1 was split for clarity and becomes paragraph S14.2.1 in the final rule. Nissan commented that the measurement distance requirements in paragraph S6.8.5.1 were confusing because they mentioned license plate lamps and headlamps. We agree and have revised the text of paragraph S14.2.1.3 of the final rule to expressly state the required distance for all lamps that paragraph S14.2.1 applies to. Nissan also noted that proposed paragraph S6.8.5.1 contained a requirement for photometric intensity between test points that was duplicated in several photometry requirements tables as a footnote. We eliminated this language from paragraph S14.2.1 of the final rule, deciding that the individual requirements tables were the appropriate location for the intensity between test point requirements.

Paragraph S6.8.5.1.1 of the NPRM becomes, in its entirety, paragraph S14.2.1.4 (split for clarity) of the final rule. Paragraph S6.8.5.1.2, detailing requirements for photometry of multiple compartment lamps and multiple lamps, becomes paragraph S14.2.1.5 in the final rule. We adopted the suggestion of Koito to specifically indicate the type of lamps to which this section applies.

[25] *http://isearch.nhtsa.gov/files/21406.ztv.html*

Paragraph S6.8.5.2 of the NPRM becomes paragraph S14.2.1.6 (split for clarity) in the final rule. Paragraph S14.2.1.6.2 was added to this section at the suggestion of Calcoast, which observed that the NPRM had not included the content of Footnotes 2 and 3, which follow Table IV, of the current version of FMVSS No. 108. The last sentence of paragraph S6.8.2, which specifically addressed samples for the color test of reflex reflectors, was moved to be paragraph S14.4.1.1 of the final rule.

Paragraph S6.8.5.3, *License plate lamp photometry*, of the NPRM becomes paragraph S14.2.2 in the final rule. Paragraphs S6.8.5.3.1 and S6.8.5.3.2 of the NPRM become paragraphs S14.2.2.1 and S14.2.2.2, respectively, in the final rule. Nissan observed that the language of paragraph S6.8.5.3.2 was awkward and suggested a revision that did not change the substance of the requirement. We adopted Nissan's suggestion in paragraph S14.2.2.2. We also added paragraph S14.2.2.3 to the final rule to clarify that the bulb requirements of paragraph S14.2.1.6 also apply to license plate lamp photometry.

Proposed paragraph S6.8.5.4, stating requirements for reflex reflector and retroreflective sheeting photometry, becomes paragraph S14.2.3 in the final rule. For clarity, paragraph S6.8.5.4 of the NPRM has been split into paragraphs S14.2.3.1 through S14.2.3.6 and paragraph S6.8.5.4.1 has been split into paragraphs S14.2.3.7.1 through S14.2.3.8.2 in the final rule. Likewise, paragraph S6.8.5.4.1.1 in the NPRM becomes paragraph S14.2.3.8.3.1 in the final rule.

3M commented that the language of paragraph S6.8.5.4.1 of the NPRM, which is paragraph S14.2.3.7 of the final rule, did not allow a complete photometric evaluation of retroreflective sheeting because a presentation angle was not specified. 3M's premise was that the test method of the current version of FMVSS No. 108 relies on conventions regarding orientation and presentation that are part of ASTM E 810, *Standard Test Method for Coefficient of Retroreflection of Retroreflective Sheeting Utilizing the Coplaner Geometry*, which is referenced by ASTM D 4956, *Standard Specification for Retroreflective Sheeting for Traffic Control*, a document 3M contends is no longer referenced in the NPRM. This contention is incorrect. The reference to ASTM D 4956, from paragraph S5.7.1.2 of the current version of FMVSS No. 108, is replicated in paragraph S7.12.1 of the NPRM and finally by paragraph S8.2.1.2 of the final rule, with consistent language throughout. Since the connection to ASTM E 810 still exists, we see no reason to modify the final rule as 3M suggested.

Nissan suggested that the language concerning the mounting of a reflex test sample for photometry, which becomes paragraph S14.2.3.1 of the final rule, did not allow for a test chamber which does not provide a linear 100 foot test distance, but rather was arranged in a non-horizontal orientation. We do not agree and, therefore, have not changed the text from the NPRM to the final rule. The procedure of paragraph S14.2.3.1 is faithful to the language of paragraph 3.1.7 of SAE J594f, *Reflex Reflectors*, January 1977, incorporated by reference in the current version of FMVSS 108.

The reflex reflector photometry test, like all tests in Standard No. 108, describes a procedure that NHTSA would use to test a reflex reflector for purposes of compliance. It also describes the performance requirements that the reflector must be designed to conform to, when tested according to the procedure. If a manufacturer chooses to use a procedure that differs with that described in FMVSS No. 108 as its basis of compliance, or to establish a basis of compliance that does not rely on an actual test, it is free to do so. However, the manufacturer must exercise due care in designing its product to conform to the performance requirements of all applicable tests in Standard No. 108 when tested according to the procedures stated in the standard.

Paragraph S6.8.5.5, *Daytime running lamp (DRL) photometry measurements*, of the NPRM becomes paragraph S14.2.4 (split for clarity) of the final rule. Paragraph S14.2.4.3 was added to the final rule to clarify that the bulb requirements of paragraph S14.2.1.6 also apply to DRL photometry.

Nissan expressed some confusion regarding how a dedicated DRL, without any equipment that alters or conditions the voltage, should have power applied to it for photometric testing as stated in paragraph S14.2.4. We are unable to answer this question as part of the rewrite process and note Nissan can request an interpretation for this specific situation.

Paragraph S6.8.5.6 of the NPRM, covering photometry measurements of headlamps, becomes paragraph S14.2.5 in the final rule. Some rearrangement of content and splitting of sections for clarity was incorporated into the final rule. Specifically, paragraph S14.2.5.1 of the final rule contains the first sentence of paragraph S6.8.5.6 of the NPRM, paragraph S14.2.5.2 contains the last sentence of paragraph S6.8.5.6.5, paragraph S14.2.5.3 contains the last sentence of paragraph S6.8.5.6, paragraph S14.2.5.4 duplicates paragraph S6.8.5.6.1, paragraph S14.2.5.5 duplicates paragraph S6.8.5.6.2, paragraphs S14.2.5.5.1 and S14.2.5.5.2 duplicate paragraphs S6.8.5.6.2(a) and S6.8.5.6.2(b) respectively, paragraph S14.2.5.5.3 (split for clarity) duplicates paragraph S6.8.5.6.2(c), paragraph S14.2.5.5.4 duplicates paragraph S6.8.5.6.2(d), paragraph S14.2.5.5.5 (split for clarity) duplicates paragraph S6.8.5.6.2(e), paragraph S14.2.5.5.6 (split for clarity) duplicates paragraph S6.8.5.6.2(f), paragraph S14.2.5.5.7 (split for clarity) duplicates paragraph S6.8.5.6.2(g), paragraph S14.2.5.5.8 duplicates paragraph S6.8.5.6.2(i), and paragraph S14.2.5.5.9 duplicates paragraph S6.8.5.6.2(j). Paragraph S6.8.5.6.2 of the NPRM becomes paragraph S14.2.5.6 of the final rule, paragraph S6.8.5.6.4 becomes paragraph S14.2.5.7 (split for clarity), paragraph S6.8.5.6.5 (less the last sentence) becomes paragraph S14.2.5.8 (split for clarity), and paragraph S6.8.5.6.6 becomes paragraph S14.2.5.9. Guide commented that paragraph S6.8.5.6.2(h) of the NPRM described photometry measurement for moveable reflector headlamps rather than an aiming procedure and did not belong where it was located. We agree and have designated this provision as paragraph S14.2.5.10 in the final rule.

AAM and Honda objected to the word ''specified'' which appeared before ''position relative to the * * *'' in the NPRM. We omitted ''specified'' in the final rule to be faithful to paragraph S7.8.2.2(b) of the current version of FMVSS No. 108. We also added a horizontal range exclusion for visually/optically aimed moveable reflector headlamps with a fixed horizontal aim to be faithful to paragraph S7.8.2.2(d) of the current version of FMVSS No. 108, as noted in the comments of Nissan.

Paragraph S14.3 of the final rule contains the out of focus test that was part of Table XXII of the NPRM. This test only applies to motorcycle headlamps that are designed to conform to paragraph S10.17(b) of the final rule. AAM identified two typographical errors in the out of focus test procedure where there were no periods after the abbreviations ''in''. Our practice is to not include a period after such abbreviations, so the text identified by AAM is correct although in several other instances we did include a period after such an abbreviation. In the final rule we have removed periods after all such abbreviations, except in those situations where other grammatical

requirements, such as the end of a sentence, require a period.

Paragraph S14.4 of the final rule, *General test procedures and performance requirements*, contains the color test and plastic optical materials test, along with applicable requirements, from Table XXII of the NPRM. In both tests, the text as stated in the NPRM has been split for clarity in the final rule.

AAM noted that the Scope of SAE J578c, *Color Specification for Electric Signal Lighting Devices*, February 1977, contains limitations on the application of this standard that may be important to lighting manufacturers. This portion of SAE J578c was inadvertently left out of Table XXII in the NPRM. In the final rule, we have added it as paragraph S14.4.1. This section will now read, ''The requirement applies to the overall effective color of light emitted by the device and not to the color of the light from a small area of the lens. It does not apply to any pilot, indicator, or tell-tale lights. The color of the sample device * * *''

Paragraph S14.4.1.1 of the final rule, detailing alternatives for samples used in the color test of reflex reflectors, originated from the last sentence of paragraph S6.8.2 of the NPRM.

Koito, 3M, and Honda commented that the language of the performance requirement for the color test for the color yellow using the visual evaluation method omitted a key word. In the NPRM, the requirement is stated as, ''*Yellow (Amber)* is acceptable if it is less saturated (paler), greener, or redder than the limit standard.'' The revised text in the final rule states, ''*Yellow (Amber)* is *not* acceptable if it is less saturated (paler), greener, or redder than the limit standard'' [emphasis added].

AAM commented that the color restricted blue should be included in the final rule because it appears in SAE J578c. We know of no requirements in Standard No. 108 for the light from a lamp or the color of a lens material to be restricted blue. We also observed that there are also no such requirements for the colors green or blue. Therefore, we have not only decided against adding requirements for restricted blue but also have removed the requirements for the colors blue and green for both the visual evaluation method and the tristimulus evaluation method of the color test of paragraph S14.4.1 in the final rule.

AAM commented that Section 3.2, *Tristimulus Method*, from SAE J578c is not stated in its entirety in the procedure column of the color test of proposed Table XXII. We have reviewed SAE J578c and the text of the *Tristimulus Method* procedure from proposed Table XXII. We do not find that the text of proposed Table XXII omitted any substantive portion of SAE J578c that describes how the test is performed. In the absence of any specific explanation of its comments by AAM, we are not revising the *Tristimulus Method* section, now located in paragraph S14.4.1.4 of the final rule.

Paragraph S14.4.2 of the final rule contains the plastic optical materials tests from Table XXII of the NPRM. Atlas, Bayer, Grote, and AAM commented that the performance requirement for headlamp lens materials after the outdoor exposure test portion of the plastic optical materials tests in Table XXII of the NPRM was not identical to that stated in Section 4.2.3 of SAE J576 JUL91. The language of the NPRM stated that the requirement was no haze greater than 0% when measured by ASTM D 1033 (1992). SAE J576 JUL91 states the requirement as ''shall show no deterioration.''

Koito noted that while the measurement method of ASTM D 1033 (1992) was required for evaluation of the post exposure haze of other materials, it was not required for the evaluation of headlamps. Koito also stated that the post exposure performance requirements for luminous transmittance and color required by SAE J576 at Sections 4.2.1 and 4.2.2 are missing from the NPRM. We agree with these comments and have revised the plastic optical materials test outdoor exposure test portion performance requirements accordingly. Specifically, the performance requirement section for headlamp lenses, now paragraph S14.4.2.2.4.2 of the final rule, no longer requires evaluation by ASTM D 1033 (1992) and states, ''After completion of the outdoor exposure test, materials used for headlamp lenses must show no deterioration.'' The performance requirement section for luminous transmittance, now paragraph S14.4.2.2.4.4, states, ''After completion of the outdoor exposure test, all materials, when compared with the unexposed control samples, must not have their luminous transmittance changed by more than 25% when tested in accordance with ASTM E 308–66 (1973) using CIE Illuminant A (2856K).'' The performance requirement section for color, now paragraph S14.4.2.2.4.5, states, ''After completion of the outdoor exposure test, all materials must conform to the color test of this standard in the range of thickness stated by the material manufacturer.''

Bayer stated that specifying 2.3 mm thick test samples for the plastic optical materials tests represents a change from the current version of FMVSS No. 108 and may increase the testing burden of the industry. We do not believe that specifying 2.3 mm thick samples is a change from current requirements. SAE J576 JUL91 does only suggest 2.3 mm samples, paragraph S5.2.1 of the current version of FMVSS No. 108 (and paragraph S5.1 of the NPRM) states that, ''The words 'It is recommended that', 'recommendations', or 'should be' appearing in any SAE Standard or Recommended Practice referenced or subreferenced by this standard shall be read as setting forth mandatory requirements * * *'' We consider the term ''suggest'' to have a similar meaning as the term ''should be'' and have therefore included 2.3 mm as one of the sample thicknesses used for the plastic optical material test. We believe there is value in specifying sample thickness. The inclusion of the 2.3 mm sample thickness also serves to alert regulated parties that should the agency choose to perform a compliance test, it will perform the test on this sample thickness.

AAM suggested eliminating the notation concerning test samples having 32 sq cm of exposed area from the *Procedure* column of Table XXII of the NPRM and allowing it to remain in the *Samples* column of the outdoor exposure test portion of the plastic optical materials tests. We do not agree with this suggestion. The area requirement is important in both the preparation of the samples and their mounting orientation for the exposure test. An area specification is appropriate in both places and is included in both paragraph S14.4.2.1.2 and paragraph S14.4.2.2.3.1 of the final rule.

The NPRM omitted the third sentence of SAE J576 JUL91 Section 3.3.2 requiring that samples be mounted in the open with a minimum 30 cm (11.8 in) separation from their background. This has been corrected in the final rule by including the separation requirement in paragraph S14.4.2.2.3.1.

AAM suggested that content of the *Samples* column of Table XXII of the NPRM for the outdoor exposure test portion of the plastic optical material tests be repeated for the heat test portion separately. We agree that this would add clarity. We have revised the heat test portion of the plastic optical materials tests to appear as a test separate from the outdoor exposure test and have placed content specific to the heat test into paragraph S14.4.2.3 of the final rule.

Paragraph S14.5 of the final rule, *Signal lamp and reflective device test procedures and performance requirements*, contains the vibration,

moisture, dust, and corrosion tests that were located in Table XXII of the NPRM.

As previously mentioned, the references in the NPRM to SAE J577, *Vibration Test Machine*, April 1964, have been eliminated in the final rule with the incorporation of the drawing and mechanical details of the vibration machine as Figure 21. The reference in the vibration test procedure to SAE J577 has been revised to Figure 21 in paragraph S14.5.1.1 of the final rule.

AAM, Honda, and Guide commented about the inadvertent omission of the phrase ''one hour'' from the moisture test procedure of Table XXII of the NPRM. This is corrected in the final rule where paragraph S14.5.2.1, second sentence, states, ''* * * followed by a one hour drain period * * *''

We have decided that the first sentence of the moisture test performance requirements of the NPRM stating, ''After completion of the moisture test * * *'' is more appropriately part of the test procedure. Therefore, we are relocating it to be the last sentence of paragraph S14.5.2.1 of the final rule.

Calcoast commented that the moisture test performance requirement for a sealed reflex unit stated in SAE J594f, January 1977, at Section 3.1.4 is ''any visible moisture constitutes a failure.'' We agree and have revised the moisture test performance requirements of paragraph S14.5.2.2 in the final rule to state ''Accumulation of moisture in excess of 2 cc, or any visible moisture in a sealed reflex unit, must constitute a failure.''

AAM noted that the dust test of Table XXII of the NPRM is not required to be performed on sealed units per SAE J575d, August 1967, Section G, and SAE J575e, August 1970, Section G. We agree and in the final rule paragraph S14.5.3.1, *Samples* states, ''A sealed unit is not required to meet the requirements of this test.'' We also decided that the first sentence of the performance requirements of the dust test stating, ''After completion of the dust test the exterior surface of the device must be cleaned'' was part of the test procedure rather than a performance requirement so that sentence was moved to paragraph S14.5.3.2 in the final rule.

Paragraph S14.6 of the final rule, *Headlamp physical test procedures and performance requirements*, consists of all headlamp test procedures from Table XXIII of the NPRM, except for those that apply specifically to replaceable light sources or vehicle headlamp aiming devices (VHAD). Several of the tests that become paragraph S14.6 had significant portions of their text split for clarity as part of their relocation from Table XXIII of the NPRM to paragraph S14.6 of the final rule. These tests include: (1) Abrasion test, (2) chemical resistance test, (3) corrosion connector test, (4) dust test, (5) temperature cycle test, (6) internal heat test, (7) humidity test, (8) sealing test, (9) chemical resistance of reflectors of replaceable lens headlamps, (10) corrosion resistance of reflectors of replaceable lens headlamps, (11) torque deflection test, and (12) both aiming adjustment tests.

Honda commented that the pad cycling rate of the abrasion test procedure of Table XXIII of the NPRM contained typographical errors. We agree and have revised the text in paragraph S14.6.1.1.3 of the final rule from ''11 cycles at 10 ± cm per second * * *'' to the correct language from the current version of FMVSS No. 108 paragraph S8.2(b) which is, ''* * * 11 cycles at 4 ± 0.8 in (10 ± 2 cm) per second * * *.''

AAM stated the requirement that the same sample headlamp be used in both the temperature cycle test and the internal heat test was not supported in the current version of FMVSS No. 108. We disagree. The current version of Standard No. 108 states, concerning integral beam headlamps at paragraph S7.4(h)(5), ''The headlamp shall meet the requirements of subparagraph (i) and *then* those of subparagraph (ii) [emphasis added]. Subparagraph (i) describes a temperature cycle test in accordance with paragraph S8.6.1 and subparagraph (ii) describes an internal heat test in accordance with paragraph S8.6.2. Paragraph S7.5(h)(i) requires replaceable bulb headlamps to meet the same physical tests in paragraphs 7.4(g) and S7.4(h) that are required of an integral beam headlamp. Thus, there is a very clear requirement that a single headlamp sample be used, in sequence, in the temperature cycle test and then the internal heat test.

Guide and VS commented that the humidity test of Table XXIII of the NPRM incorrectly included a performance requirement of post-test photometry. We agree, and the post-test photometry provision has been removed from the humidity test, which is contained in paragraph S14.6.7.2 of the final rule.

Honda and AAM observed a typographical error in the tolerance for air flow uniformity in paragraph (d) of the humidity test procedure. The text of the NPRM states, ''* * * each grid point is 10% of the average * * *'' while the corrected text of paragraph S14.6.7.1.6 of the final rule states, ''* * * each grid point is ± 10% of the average* * *'' which is faithful to paragraph S8.7(d) of the current version of FMVSS No. 108.

As we mentioned in the discussion of paragraph S14.5, the references in the NPRM to SAE J577, *Vibration Test Machine*, April 1964, have been eliminated in the final rule with the incorporation of the drawing and mechanical details of the machine as Figure 21. The reference in the vibration test procedure of Table XXIII of the NPRM to SAE J577 has been revised to Figure 21 in the final rule.

Nissan observed that the applicability of the chemical resistance of reflectors of replaceable lens headlamps test and the corrosion resistance of reflectors of replaceable lens headlamps test did not include integral beam headlamps, as required by paragraph S5.8.11 of the current version of FMVSS No. 108. Its comment is correct and paragraph S10.14.7.6 of the final rule correctly states the requirement for these two tests.

Koito and Nissan questioned whether the inward force test of Table XXIII applied to headlamps other than sealed beams, particularly those headlamps that utilize a VHAD or are visually/optically aimed. This requirement comes from paragraph S7.8.5.1(b) of the current version of FMVSS No. 108. That paragraph states, ''when a headlamp is installed on a motor vehicle, its aim in any direction shall not change by more than 0.30 degree nor shall the lamp recede more than 0.1 in (2.5 mm) after being subjected to an inward force of 50 pounds (222 newtons) applied evenly to the lens parallel to the mechanical axis.'' There is no distinction in this paragraph to any particular type of headlamp, so it must be applied to all headlamps.

Nissan commented that the performance requirements of the aiming adjustment test (laboratory) were ''difficult to read'' as presented but did not explain the difficulties or suggest alternative language. In the final rule, we have split the performance requirements of this test into paragraphs S14.6.17.2.1, S14.6.17.2.2, and S14.6.17.2.3, which we believe will improve clarity.

Paragraph S14.7 of the final rule, *Replaceable light source physical test procedures and performance requirements*, consists of the deflection test for replaceable light sources and the pressure test for replaceable light sources from Table XXIII of the NPRM, along with a replaceable light source power and flux measurement procedure. The text of all of these items has been split for clarity in the final rule. There were no comments submitted that impacted the substance of these

procedures and requirements. However as mentioned in the discussion of paragraph S11, the NPRM contained paragraphs S15.2 and S15.3, both titled *Power and flux measurement*, that essentially described the same test of replaceable light sources. We consolidated the procedures of paragraphs S15.2 and S15.3 into a single procedure, without revising or modifying the requirements, and relocated it to paragraph S14.7.3 of the final rule.

Paragraph S14.8 of the final rule, *Vehicle headlamp aiming device (VHAD) physical test procedures and performance requirements,* consists of the six VHAD tests that were part of Table XXIII of the NPRM. There were no comments submitted that impacted the substance of these procedures and requirements.

Paragraph S14.9 of the final rule, *Associated equipment physical test procedures and performance requirements,* consists of the tests contained in Table XXI of the NPRM. These test procedures and performance requirements, as written in Table XXI of the NPRM, were in block paragraph form. As we have done in several places throughout the final rule, we have split some of these longer paragraphs into several smaller sections, which are grouped according to similar content, in an effort to improve clarity.

One of the goals of the FMVSS No. 108 rewrite was to remove outdated requirements from the document. The physical test requirements for associated equipment presented an opportunity to pursue this goal. The applicable SAE documents incorporated by reference in FMVSS No. 108 were adopted between 1964 and 1969 and several of them contained specifications for both vehicles with a nominal 12 volt electrical system as well as those with a nominal 6 volt electrical system. Believing that few, if any, vehicles manufactured after the effective date of FMVSS No. 108 have been equipped with a nominal 6 volt electrical system, we deleted references to that voltage in the proposal.

In its comments, AAM requested that we restore the nominal 6 volt requirements to the physical test requirements for associated equipment. Presumably, this comment was based upon the knowledge that one of its constituent organizations was producing a 6 volt device for a regulated vehicle or had plans to do so. While we continue to believe that those requirements are not currently being used by any regulated party, we do not want to eliminate a compliance option that has value. Therefore, we have restored the applicable language from the SAE documents [26] incorporated by reference in the current version of FMVSS No. 108 for testing devices used in a nominal 6 volt electrical system. The restoration of nominal 6 volt requirements necessitated revisions in the following portions of paragraph S14.9 of the final rule: (1) S14.9.1 turn signal operating unit durability test procedure, (2) S14.9.2.2 vehicular hazard warning signal operating unit durability performance requirements, and (3) S14.9.3 turn signal flasher and vehicular hazard warning signal flasher test procedure and performance requirements.

AAM and Honda commented that the reference in the turn signal operating unit durability test procedure in Table XXI of the NPRM incorrectly stated the ripple voltage tolerance of the power supply. We agree and have revised the language of that procedure in the final rule. The text ‘‘ * * * ripple voltage of less than 5% * * * was changed to ‘‘ * * * ripple voltage of not more than 5% * * *.’’

The turn signal flasher and vehicular hazard warning signal flasher both maintained their reference to SAE J823b, *Flasher Test Equipment,* April 1968, in the NPRM. As previously mentioned, this document was eliminated from the final rule by incorporating its content directly into Standard No. 108. This was accomplished in the final rule by creating Figure 22, *Flasher Standard Test Circuit,* for the circuit diagram of Figure 1 of SAE J823b, and also by listing the test setup requirements of Sections 3 through 9 of SAE J823b in paragraph S14.9.3 of the final rule as well as the power supply specifications for testing performance requirements and those specifications for testing durability requirements that were Section 10 of SAE J823b into paragraph S14.9.3.2 of the final rule.

Koito commented on the load requirements (from paragraph S5.1.1.19 of the current version of FMVSS No. 108) for variable load turn signal flashers for the turn signal flasher starting time test and the flash rate and percent current ‘‘on’’ time test. In the proposal, this information was located parenthetically after the notation ‘‘Starting time test’’ and ‘‘Flash rate and percent current ‘‘on’’ time test’’. We agree with Koito that this is not the optimum location for this provision, and have inserted it into the applicable test procedure in the final rule. Where those proposed procedures stated ‘‘* * * with the design load connected * * *’’ the text of the final rule now states ‘‘* * * with the design load (variable load flashers are tested with their minimum and their maximum design load) connected * * *.’’

Koito and AAM observed that load specifications stated in the procedure for the turn signal flasher voltage drop test and durability test procedures did not clearly replicate the requirements from paragraph S5.1.1.19 of the current version of FMVSS No. 108, and SAE J590b, October 1965, Section 2. We have revised the language of those procedures in the final rule to clarify the load specifications. The proposed procedures stated ‘‘* * * with the maximum design load connected * * *’’ which has changed in the final rule to state ‘‘ * * * with the design load (variable load flashers are tested with their maximum design load) connected * * *.’’

Honda observed that the durability test performance requirements for the vehicular hazard warning signal flasher did not include the notation from SAE J945, February 1966, Section 7, requiring the post durability test to incorporate pilot lamps as part of the maximum design load. We agree and have revised the language of the performance requirements in paragraph S14.9.3.10.3 of the final rule from ‘‘ * * * maximum design load at an ambient * * * ’’ to ‘‘maximum design load, including pilot lamps as specified by the manufacturer, at an ambient* * *.’’

Honda, AAM, and Koito all commented that the column headings for the semiautomatic headlamp beam switching device sensitivity test performance requirements were incorrect. We agree and have revised them in paragraph S14.9.3.11.2.3.1 of the final rule. They now read from left to right: Test position (degrees) [above the two columns of lateral and vertical test points], Dim (cd at 100 ft), and Hold (cd at 100 ft).

Honda observed that the maximum dim sensitivity at test point H–5R was incorrectly stated in the NPRM as 100 (cd at 100 feet). The correct value is 150 (cd at 100 feet) as shown in Table 1 of SAE J565b, February 1969. We incorporated this revision in the final rule.

Koito also commented that the semiautomatic headlamp beam switching device voltage regulation test procedure incorrectly refers to ‘‘dim’’ sensitivity in the NPRM. The correct notation is ‘‘hold’’ sensitivity and that is

[26] SAE J589, *Turn Signal Operating Units,* April 1964; SAE J910, *Vehicular Hazard Warning Signal Operating Unit,* January 1966; SAE J945, *Vehicular Hazard Warning Signal Flasher*, February 1966; SAE J590b, *Automotive Turn Signal Flashers*, October 1965; and SAE J823b, *Flasher Test Equipment*, April 1968.

what appears in paragraph S14.9.3.11.3.1.2 of the final rule.

AAM commented that the language of the semiautomatic headlamp beam switching device warmup test performance requirement of the NPRM was not faithful to SAE J565b, February 1969, Section 4.5. We have revised that language in paragraph S14.9.3.11.5.2 of the final rule to be identical to the first sentence of Section 4.5, specifically, ''If the warmup time of the device exceeds 10 seconds, it must maintain the headlamps on lower beam during warmup.''

Tables

Table I–a Portion of Proposed Table I

As mentioned previously, we have decided to split Table I of the NPRM into three sections. Table I–a lists lamp and reflective device requirements for passenger cars, multipurpose passenger vehicles, trucks, and buses of all widths. Where we refer to comments about the content of Table I–a, it indicates that those comments were submitted about the content of the portion of Table I of the NPRM now contained in Table I–a of the final rule.

Based on comments submitted to the docket regarding our proposal, we have decided to make several revisions to Table I–a. One of these revisions was the inclusion of the abbreviation ''MPV'' in parenthesis after the term ''Multipurpose Passenger Vehicle'' in the title of Table I–a. We have subsequently used this abbreviation several times in this document.

Guide commented that the reference in Table I for the number and color of headlamps does not directly state a number but instead makes an additional reference to Table II. We do not find this method difficult or complex, it somewhat duplicates the method of the current version of FMVSS No. 108. Sub-referencing is necessary because the number of headlamps actually used depends on the headlighting system chosen. We clarified the language of Table I–a for the number of upper beam and lower beam headlamps from '' * * * type and number * * * '' to '' * * * headlighting system * * * '' to more precisely describe this sub reference.

AAM and Koito commented about the inclusion of the phrase '' * * * equal to or wider than the upper beam headlamps'' in the mounting location description for lower beam headlamps along with the corresponding phrase '' * * * equal to or narrower than the lower beam headlamps'' in the mounting location description for the upper beam headlamps. They, along with Honda, which commented about the same language in Table I relating to motorcycle headlamps, believe that this phrase is inconsistent with the current FMVSS No. 108 requirement. We agree that it does not fully describe the relationship required between upper and lower beam headlamps. We removed this language from Tables I–a and I–c of the final rule and incorporated headlamp beam spacing requirements in paragraph S6.1.3.5.

AAM commented that the activation requirement for turn signal lamps stating, ''Current 108 paragraph S5.1.1.19 references SAE J590b * * * in which Figure 1 combines flash rate and percent current ''on'' time. This figure appears as Figure 2 in Rewrite 108. There is no reference to percent current ''on'' time in Rewrite 108 Table I. We are unable to find a reference to Rewrite Figure 108 anywhere within the Rewrite 108 text.'' The reference to NPRM Figure 2 is contained in Table XXI which details the performance of turn signal (and vehicular hazard warning signal) flashers, specifically in the performance requirements for the *Flash Rate and Percent Current ''On'' Time Test.* We agree that including the rate of 60 to 120 flashes per minute in Table I is a detail that is not needed. The flash rate will be determined by the choice of flasher and its performance when subjected to the test of paragraph S14.9.3. Therefore, we are revising the *Device Activation* requirement for turn signal lamps in Table I–a (and the corresponding requirement in Table I–b for trailers and in Table I–c for motorcycles) to read, ''Flash when the turn signal flasher is actuated by the turn signal operating unit.'' This statement more accurately describes the process by which the turn signal lamps are caused to flash.

AAM, Honda, and Koito commented about the activation requirements for taillamps, side marker lamps, and license plate lamps with respect to their required activation when the parking lamps are activated. AAM contended that the NPRM does not clearly state that the taillamps, side marker lamps, and license plate lamps are required to be activated when the parking lamps are activated only on vehicles less than 2032 mm in overall width. To clarify those requirements, we revised the language of the activation requirement from * * * ''Must be activated when the headlamps are activated in a steady burning state or the parking lamps are activated (not a requirement for vehicles 2032 mm or more in overall width)'', to * * * ''Must be activated when the headlamps are activated in a steady burning state or the parking lamps on passenger cars and MPVs, trucks, and buses less than 80 inches in overall width are activated.'' This revision was made to the *Device Activation* requirements for taillamps, side marker lamps, intermediate side marker lamps, and license plate lamps in Table I–a.

AAM also commented that the activation requirement for a stop lamp optically combined with a turn signal lamp was not stated in Table I using the language from SAE J586 FEB84, at Section 5.4.2 and SAE J1398 MAY85, also at Section 5.4.2. One of the stated intentions of the rewrite is to clarify requirements without making substantive changes to them. Although we were satisfied with the language of the NPRM in this situation, we revised the language to be faithful to the original SAE language. We replaced the third sentence of the *Device Activation* requirement for stop lamps in Table I–a with ''When a stop signal is optically combined with the turn signal, the circuit must be such that the stop signal cannot be turned on if the turn signal is flashing.'' Identical revisions have been made in Table I–b for trailers and Table I–c for motorcycles.

We have corrected an omission in Table I–a with respect to the requirements applicable to a truck tractor. The current version of FMVSS No. 108 excludes, in paragraph S5.1.1.2, a truck tractor from being required to be equipped with any rear side marker devices, rear clearance lamps, and rear identification lamps. The NPRM included this exclusion for rear side marker lamps, rear clearance lamps, and rear identification lamps but failed to include the notation for rear side reflex reflectors. This has been corrected in the final rule.

TTMA stated in its comments that the partial photometric output exclusion for clearance lamps mounted other than on the front or rear of a vehicle where necessary to indicate overall vehicle width or protect the lamps from damage, appearing in paragraph S5.3.2.1 of the current version of FMVSS No. 108, does not appear in the NPRM. The exclusion for mounting location does appear in the *Mounting Location* portion of Table I–a for both front and rear clearance lamps (and has been added to Table I–b for trailer clearance lamps). The photometric output exclusion for such lamps appears in Table XI as Footnote 4, which is the appropriate location for this detail.

TTMA also called attention to an interpretative rule issued by the agency in 1999 and published at 64 FR 16358 [27]

[27] 64 FR 16358, (April 5, 1999).

which quantifies the requirement that clearance lamps and identification lamps be mounted ''as near the top as practicable'' and describes how ''practicability'' will be determined for these lamps when mounted on a vehicle with cargo doors. We agree that this interpretative rule concerning presumption of practicability is important to include in FMVSS No. 108. Therefore, we have added to the *Mounting Height* portion of Table I–a, applicable to rear clearance lamps and rear identification lamps (and to those same lamps in Table I–b applicable to trailers), the sentence ''Practicability of locating lamps on the vehicle header is presumed when the header extends at least 25 mm (1 inch) above the rear doors.''

ASSN commented that the incorporation of the May 26, 2000 letter of interpretation to Mr. Farber [28] permitting stop lamps to be activated when a vehicle is slowed by a device designed to retard the motion of a vehicle, should also be extended to activation of a high-mounted stop lamp. The Farber interpretation was issued several years after high-mounted stop lamps were first required on vehicles but does not explicitly address their activation. The current version of FMVSS No. 108 contains, in paragraph S5.5.4, slightly different activation requirements for stop lamps and for high-mounted stop lamps. It states, ''The stop lamps on each vehicle shall be activated upon application of the service brakes. The high-mounted stop lamp on each vehicle shall be activated *only* upon application of the service brakes'' (emphasis added). This difference in activation requirements is explained in the September 10, 1990 letter of interpretation to Mr. Henneberger [29] which states, '' * * * The second sentence of S5.5.4 restricts operation of the center stop lamp to application of the service brakes, but no such restriction exists in the first sentence. Although the first sentence requires operation of the stop lamps upon application of the service brakes, when considered in conjunction with the restriction stated in the second sentence, it can be read as implying that there may be other conditions under which activation of the stop lamps is permissible. However the reason for the difference in the two sentences is otherwise. Commonly, in red rear combination lamps, the same filament serves both the stop and turn signal functions. If the turn signal is functioning when the brakes are applied, the first sentence ensures that the stop signal overrides the turn signal.''

The Farber interpretation was incorporated into the NPRM because of its conclusion that, '' * * * when a vehicle is slowed by downshifting or an engine retarder, from the perspective of the following driver, it would be equivalent to what would occur if the service brakes were applied. Therefore, it would be permissible for the stop lamps to be illuminated under this scenario, since such illumination would not create any confusion in the mind of a following driver and thus would not ''impair the effectiveness'' of the required stop lamps.'' Clearly, the Farber interpretation establishes a situation where the action of a retarder or similar device is equivalent to the action of applying the service brakes. Since S5.5.4 of the current version of FMVSS No. 108 requires activation of the high-mounted stop lamp when the service brake is applied, it follows that it may also be activated by application of a retarder. Table I–a of the final rule has been revised to include this permitted activation.

AAM recognized a typographical error in Table I–a in describing the mounting location requirements for school bus signal warning lamps. AAM suggested language that is more faithful to that of SAE J887, *School Bus Red Signal Lamps*, July 1964, the document incorporated by reference in the current version of Standard No. 108. We have revised the language of the final rule applicable to the mounting location of these lamps to state, '' * * * but in no case shall the spacing between lamps be less than 40 inches'', which is more faithful to SAE J887.

Nissan commented that inclusion of the Daytime Running Lamp (DRL) in a Table titled *Required Lamps and Reflective Devices* implied that the DRL was the only non-required lamp permitted on regulated vehicles. We have discussed previously that we believe Table I–a is the appropriate location for the DRL in the standard. However, we have clarified the portion of Table I–a applicable to the DRL by revising the title from *''Additional Lamps Allowed * * *''* to *''Daytime Running Lamps Allowed * * *.''*

Nissan and AAM commented that Table I–a did not completely describe all mounting height restrictions on DRLs in the appropriate portion of the table. We have clarified in Table I–a that additional requirements do apply and are included in paragraph S7.10.13(b) of the final rule.

Guide commented that additional DRL activation requirements are contained in paragraph S7.11.2 of the NPRM and should be added to Table I–a. We disagree. There is language in Table I–a calling attention to these additional requirements and directing users to paragraph S7.10.10.1(c) of the final rule, a notice that we believe is adequate.

Table I–b Portion of Proposed Table I

In addition to those revisions to Table I–b that were listed in the preceding section, several others have been incorporated in the final rule.

AAM commented that the width criteria for installing a single taillamp, stop lamp, or rear reflex reflector on a trailer was incorrectly dimensioned. Table I–b stated that the installation of a single such device can occur ''* * * on trailers less than 760 mm wide.'' The correct dimension from paragraph S5.1.1.14 of the current version of FMVSS No. 108 is 30 inches, and the final rule states that dimension for all three devices. Current paragraph S5.1.1.14 also states that when single devices are used, they shall be located ''* * * at or near its vertical centerline.'' To clarify this requirement, we have revised the *Mounting Location* requirement language from ''A single lamp (reflector) must be mounted at or near the vertical centerline'' to ''When a single lamp (reflector) is installed, it must be mounted at or near the vertical centerline.''

AAM, Grote, and Koito all commented that the NPRM did not include the mounting height limitation of 60 inches for rear side marker lamps installed on trailers 2032 mm or more in overall width, which is stated in Table II of the current version of FMVSS No. 108. This omission is corrected in Table I–b in the final rule.

TTMA commented on the appropriate location for the requirement stating that conspicuity treatment on a trailer can serve as the required reflex reflectors if the conspicuity treatment is placed at the locations required for reflex reflectors. This alternative is contained in paragraph S6.1.1.1.1 in the NPRM, but we agree it is best located in Table I–b and have moved it there, following the listing of ''Reflex Reflectors'' and ''Intermediate Reflex Reflectors'', and have eliminated paragraph S6.1.1.1.1 from the final rule.

TTMA commented that the requirements for mounting height for clearance lamps and identification lamps in Table I–b was missing. We have corrected this by adding the appropriate language from Table II of the current version of FMVSS No. 108,

[28] *http://isearch.nhtsa.gov/files/21341.ztv.html*

[29] *http://isearch.nhtsa.gov/gm/90/nht90–3.93.html*

''As near the top as practicable.'' We have also added language to the *Mounting Height* portion of the rear clearance lamp section stating that, similar to Table I–a, they are not required to be mounted as near the top as practicable when the rear identification lamps are mounted at the extreme height of the vehicle, an exclusion provided by paragraph S5.3.1.4 of the current version of FMVSS No. 108 and inadvertently omitted from the NPRM.

Table I–c Portion of Proposed Table I

Consistent with the revision in language to the *Number and Color* portion of headlamps in Table I–a, we have revised Table I–c. It previously stated ''* * * of a type and number listed * * *,'' but now states ''* * * of a headlighting system listed * * *.'' We believe that this revision more precisely describes this requirement.

AAM commented that there are additional motorcycle headlamp mounting restrictions that are not acknowledged in Table I–c. We agree and have added language to direct the reader to paragraphs S10.17.1.1, S10.17.1.2, and S10.17.1.3 of the final rule for additional headlamp mounting requirements.

We have inserted the language ''a turn signal'' between the words ''between'' and ''lamp'' in the last sentence of the *Mounting Location* portion of the front turn signal lamp requirements section of Table I–c of the final rule to clarify that requirement. Also, the language of the last sentence of the *Mounting Location* portion of the rear turn signal lamp requirements section of Table I–c was revised so that it now states, ''* * * between the turn signal lamp and taillamp or stop lamp is 4 inches * * *,'' a change that clarifies the requirement in the final rule.

Table II–a Headlighting Systems—Sealed Beam

GE, Honda, AAM, and Koito commented that the reference to photometry requirements in Table XIX of the NPRM for a lower beam visual aim ''LF'' headlamp erroneously stated ''LB1(1)'' rather than ''LB1V(1).'' We agree and this has been corrected in the final rule.

Table II–b Headlighting Systems—Combination

GE, Honda, AAM, and Koito commented that the reference to photometry requirements in Table XIX of the NPRM for a 4 lamp system, lower beam visual aim headlamp erroneously stated ''LBV(4)'' rather than ''LB1V(4).'' We agree and this has been corrected in the final rule.

Koito commented that if an integral beam headlamp was used in a combination headlighting system, it could consist of beam contributors and if so, they would be subject to the photometric allocation formula described in paragraph S6.8.5.6.6 of the NPRM. Koito requested that a footnote be added to call attention to that possibility. We agree and have added Footnote 7 to the final rule stating ''Beam contributor photometric allocation formula of paragraph S14.2.5.9 may apply.''

Table II–c Headlighting Systems—Integral Beam

Footnote 6 was revised for clarity in the final rule to read, ''Beam contributor photometric allocation formula of paragraph S14.2.5.9 applies.''

Koito commented that the lower beam photometry requirements reference in the NPRM for the headlamp in a four lamp system that provides a portion of the upper beam and the lower beam should be ''LB3M'' rather than ''LB4M'' for a mechanically aimed headlamp and ''LB3V'' rather than ''LB2V'' for a visually/optically aimed headlamp. These references are taken from paragraph S7.4(a)(1)(iii) of the current version of FMVSS No. 108, which specifies Figure 28–1 or Figure 28–2. LB4M is a restatement of the requirements of Figure 28–1 and LB2V similarly of Figure 28–2.[30] We do not agree with Koito's comment and are therefore making no revision in the final rule.

Table II–d Headlighting Systems—Replaceable Bulb

AAM and Koito commented that the references in Table II–d to photometry requirements in Table XIX for UB1, LB1M, and LB1V should include Footnote 4, ''Lower beams may remain activated when upper beams are activated,'' based upon paragraph S5.8.8 of the current version of FMVSS No. 108. We agree that the UB1, LB1M, and LB1V requirements are derived from Figures 15–1 and 15–2 of the current version of FMVSS No. 108. Paragraph S5.8.8 states that a headlighting system designed to conform to the photometric requirements of Figures 15–1 and 15–2 may be so wired. That footnote has been added to the final rule.

Koito and AAM commented that the photometric requirement reference in Table II–d of the NPRM for the upper beam of a 2 lamp system with a light source composition of HB2 or any single filament type used alone or with any other single or dual filament type, should include UB3 (Figure 27–1 or 27–2 in the current version of FMVSS No. 108) as well as the listed UB2 (Figure 17–1 or 17–2 in the current version of FMVSS No. 108). They provide the rationale that this is permitted by paragraph S7.5(d)(2)(ii)(A)(1) of the current version of FMVSS No. 108. Indeed, a literal reading of that text could lead to such a conclusion. However, Figure 26, *Table for Determining the Photometric Requirements of Replaceable Bulb Headlamp Systems,* of the current version of FMVSS No. 108 clearly shows, in the box where the row marked ''Two-Headlamp System'' intersects the column marked ''HB2 or Any Single Filament Type used Alone or with Any Other Single or Dual Filament Type,'' that the applicable photometry requirements are those of Figure 17–1 or 17–2.[31] Faced with the seeming contradiction between paragraph S7.5 (d)(2)(ii)(A)(1) and Figure 26, we looked for other cues in FMVSS No. 108 that would confirm the correct requirement. One such cue is in paragraph S7.5(b) which states that, ''The photometrics as specified in subparagraphs (c) through (e) of this paragraph (depicted in Figure 26), using any light source of the Type intended for use in such system.'' This clearly indicates that paragraph S7.5 and Figure 26 provide identical information. Another cue is the language in paragraph S7.5(d)(2)(i)(A)(2) which states that only the photometry requirements of Figure 17–1 or 17–2 are to be used for lower beam with a two lamp system that uses an HB2 source.

The specific language of paragraph S7.5(d)(2)(ii)(A)(1) first appeared in Standard No. 108 several years ago during a revision in text. Instead of concluding with ''* * * light sources that include Type HB2 * * *'' paragraph S7.5(d)(2)(ii)(A)(1) should have concluded with ''* * * light sources other than Type HB2 * * *'' This would make it consistent with paragraph S7.5(d)(2)(i)(A)(1), which addresses the lower beam, and Figure 26.

Because this ambiguity has existed for a considerable length of time, it would be a substantive change to revise it in the final rule and thus is outside the scope of the rewrite. We have revised

[30] And also Figure 17–2 which has identical requirements.

[31] The current version of FMVSS 108 presents headlamp photometry requirements in sets of related tables that differ only by application to type of aiming system used. In this instance Table 17–1 applies to mechanically aimed headlighting systems while Table 17–2 applies to visually/optically aimed headlighting systems.

Table II–d in the final rule to indicate that UB3 may be used as an upper beam photometry requirement for a 2 lamp system using a Type HB2 or any single filament type used alone, or with any other single or dual filament type. However, regulated parties should be aware that we consider this to be incorrect and we may take action soon to correct what we believe is a mistake.

Table III Conspicuity Systems Requirements Becomes Table III Marking Requirements Location

The recognition that the tabular method of organization did not work well for the presentation of lengthy textual requirements provided the rationale for moving the conspicuity systems requirements content of Table III of the NPRM to paragraph S8.2 of the regulatory text of the final rule. The substantive issues raised by public comment and the revisions to conspicuity systems are discussed under paragraph S8.2. As discussed under paragraph S6.5, Table III has been re-designated as a source for listing each location in the regulatory text of the final rule applicable for each marking requirement of Standard No. 108.

Table IV Effective Projected Luminous Lens Area Requirements

As previously mentioned, this table has been divided into three sections in the final rule.

Koito and Guide commented that the effective projected luminous lens area requirements for a front turn signal lamp were incorrectly stated in what is now Table IV–a and did not agree with the requirements of SAE J588 NOV84. We concur and have clarified those requirements in the final rule to indicate that there is no effective projected luminous lens area requirement for each compartment of a multiple compartment front turn signal lamp.

There were no comments submitted that impacted what are now Tables IV–b and IV–c in the final rule.

Table V Visibility Requirements of Installed Lighting Devices

As previously mentioned, this table has been divided into four sections. AAM suggested that the column marked ''Applicable Vehicles'' was not needed. We agree and have removed it from all four sections of Table V in the final rule.

Table V–a Visibility Requirements of Installed Lighting Devices

AAM suggested alternative language referring to the required visibility of high-mounted stop lamps when two lamps are installed. We agree with its suggestion and have revised the language of the final rule appearing in parenthesis to read (Single lamp or two lamps together where required by paragraph S6.1.1.2 of this standard.)

Table V–b Visibility Requirements of Installed Lighting Devices (Lens Area Visibility Option)

Grote suggested that the mandatory enforcement dates for the exclusive use of the visibility options of Table V–b and V–c be included in those tables. We believe it is preferable to include these dates in paragraph S6.4.4 of the regulatory text of the final rule, where additional details about choosing a visibility compliance method are located.

AAM suggested that the language of Footnote 2 of Table V–b (and Footnote 2 of Table V–c) be revised for clarity. We agree and those footnotes now read in the final rule, ''Where a lamp is mounted with its axis of reference less than 750 mm above the road surface, the vertical test point angles located below the horizontal plane subject to visibility requirements may be reduced to 5° down.''

Table V–c Visibility Requirements of Installed Lighting Devices (Luminous Intensity Visibility Option)

AAM claimed that the visibility requirements specifying corner points at 80° outboard are erroneous. We disagree because these corner points are faithful to those stated in Figure 20 of the current version of FMVSS No. 108.

Table V–d Visibility Requirements of Installed Lighting Devices (Legacy Visibility Alternative)

AAM identified a typographical error in the proposal where a period did not directly follow the abbreviation ''mm'' in the required visibility of turn signal lamps. This has been corrected in the final rule by removing all periods after these abbreviations in keeping with the style of regulatory text.

Nissan believed that the term ''existing'' in the parenthetical subtitle of this section was indeterminate and suggested it be removed. We decided to revise the subtitle from ''(Existing SAE Visibility Alternative)'' to ''(Legacy Visibility Alternative)'' in the final rule suggesting that these requirements are ones that have historically been used.

Guide commented that the sentence ''Where more than one lamp or optical area is lighted on each side of the vehicle, only one such area on each side need comply'' should not be included in visibility requirements. We disagree because it is an integral part of the SAE documents incorporated by reference in the current version of FMVSS No. 108.[32]

Guide also suggested that the phrase ''To be considered visible'' preface the specific visibility requirements in Table V–d. We believe that the language of the requirements in Table V–d, along with the text of paragraph S6.4.4, clearly describe what is required and the additional language is not needed.

We have revised the visibility requirement minimum value for a taillamp in Table V–d from 1250 sq mm to 2 sq in to be faithful to the language of SAE J585e, September 1977, Section 4, incorporated by reference in the current version of FMVSS No. 108, which is the original source of this requirement.

Table VI Front Turn Signal Lamp Photometry Requirements

As previously mentioned, this table has been divided into two sections. Table VI–a contains the base front turn signal lamp photometry requirements and the 2.5 times base front turn signal lamp photometry requirements. Table VI–b contains the 1.5 times base and the 2.0 times base front turn signal lamp photometry requirements.

Nissan, AAM, and Koito commented that displaying the ratio requirements for both turn signal lamps combined with parking lamps and turn signal lamps combined with clearance lamps in the same column of our proposal was confusing. We agree and have placed the requirements for those two combinations in separate columns in both Tables VI–a and VI–b in the final rule.

Koito and AAM commented that Footnote 4 does not accurately state the requirements of SAE J1395 AP85, Section 5.1.5.2, incorporated by reference in the current version of FMVSS No. 108. We agree and have revised that footnote in the final rule to read ''When a clearance lamp on a vehicle 2032 mm or more in overall width is combined with a front turn signal lamp and the maximum luminous intensity of the clearance lamp is located below horizontal and within a 1.0° radius around the test point, the ratio for the test point may be computed by using the lowest value of the clearance lamp luminous intensity within the generated area.''

AAM noted several instances where the group minimum photometric intensity values for 2 and 3 lighted sections, 2.5x base photometry lamps, were erroneous. These five values were

[32] SAE J1395 APR85, S5.4.1, SAE J586 FEB84, S5.4.1, SAE J1398 MAY85, S5.4.1, and SAE J585e, September 1977, S4.

all 0.5 cd less than their calculated values. The correct values have been incorporated in Table VI–a in the final rule.

Koito suggested that several of the group minimum photometric intensity values for 2 lighted sections, base photometry lamps, are erroneous. Koito appears to have based its comment on the observation that the arithmetic sum of the minimum values of all test points included in the groups exceeds the value shown for the group. However, in this case all of the listed values are accurate. They are consistent with values of Table 1 for group requirements and Table 3 for individual test point requirements of SAE J588 NOV84, incorporated by reference in the current version of Standard No. 108. Although in most cases SAE has specified that group photometric values equal the sum of the individual test point values in a group, there are exceptions, and this is one of those exceptions.

Table VII Rear Turn Signal Photometry Requirements

Footnote 6 of the final rule was revised to agree with the decision to eliminate the reference to SAE J588e for double faced turn signal lamps installed on truck tractors. It now reads, ''A double-faced turn signal lamp installed as described in paragraph S6.1.1.3 on a truck tractor need only meet the photometric requirements for a left side lamp where the lamp is mounted on the left side of the vehicle, and for a right side lamp where the lamp is mounted on the right side of the vehicle.''

Table VIII Taillamp Photometry Requirements

Calcoast commented that Footnote 1 and Footnote 2 to Table VIII of the NPRM are not mutually exclusive. Therefore, the limitations imposed by compliance with one of these footnotes may negate an allowance offered by the other. We agree with Calcoast's assessment. The situation that it mentioned actually affects all lamps where grouped test point photometric compliance is permitted. The requirements of Footnote 1 of Table VIII also apply to all other lamps where grouped compliance is permitted. The original source of this requirement is SAE J575, *Test for Motor Vehicle Lighting Devices and Components,* paragraph J, which is identical in both J575d, August 1967, and J575e, August 1970, the two versions of this standard applicable to signal lamps in FMVSS No. 108. Footnote 2 of Table VIII describes the basic premise of grouped compliance. The failure of an individual test point in the group to meet its minimum photometric intensity can be offset if one or more of the other points in the group exceed their minimum intensity requirement by enough margin that the group total intensity is still met.

Additionally, turn signal lamps and stop lamps, including high-mounted stop lamps, also have a further limitation from their original SAE source document concerning how much any individual test point can fail to meet its minimum intensity when considered in a group compliance situation. This limitation states that the measured value at each test point must not be less than 60% of the minimum value.

All these limitations must be considered simultaneously when determining grouped photometric compliance for lamps where that procedure is permitted. Calcoast was correct in its assessment that these limitations may negate full utilization of each other.

Koito and AAM identified two minimum test point photometric intensity values for 3 lighted section lamps they believe are erroneous. We agree and have corrected the values at 5L–10D and 5R–10D in the final rule.

We have also revised Table VIII in the final rule to reduce confusion by placing the minimum and maximum photometric intensity values in separate columns for each of the lighted sections alternatives.

Koito commented that Table VIII did not include Footnote 5 from Table 1 of SAE J585e, *Tail Lamps (Rear Position Lamps),* September 1977, incorporated by reference in the current version of FMVSS No. 108. This footnote limits the size of the area of maximum photometric intensity in a specified portion of the photometric pattern. This requirement was added to Table VIII in the final rule and now reads, ''A taillamp shall not exceed the maximum intensity over any area larger than that generated by a 0.25° radius, within a solid cone angle from 20°L to 20°R and from H to 10°U.''

Table IX Stop Lamp Photometry Requirements

The alternative photometric intensity requirements for a stop lamp installed on a motor driven cycle that were included in Table IX in the NPRM have been relocated to new Table XIII in the final rule. This relocation means that Footnote 5 is no longer needed in Table IX and it has been eliminated. Footnote 7 of the NPRM has been redesignated as Footnote 5 in the final rule.

Honda, AAM, and Koito all observed an erroneous group minimum photometric intensity value for 3 lighted sections in group 3. The correct value is 520 cd instead of the listed 445 cd. This error is corrected in Table IX of the final rule.

In Table IX of the NPRM, it was stated that when a stop lamp is combined with a taillamp, the luminous intensity of the stop signal must exceed the luminous intensity of the tail signal at each test point by a certain minimum ratio. This ratio value is common for all vehicles at all test points with the exception of the test point H–5L.[33] Proposed Table IX showed the ratio value at this point as 3/5 (6) and further states at Footnote 6, ''Values preceded by a slash (/) apply only to lamps installed on multipurpose passenger vehicles, trucks, trailers, and buses, of 2032 mm or more in overall width.'' Thus, the requirement at the H–5L test point is that the luminous intensity of the stop lamp exceed the luminous intensity of the combined taillamp by at least 3 times on multipurpose passenger vehicles, trucks, trailers, and buses, of 2032 mm or more in overall width, and by at least 5 times on other applicable vehicles which includes all passenger cars and motorcycles and all multipurpose passenger vehicles, trucks, trailers, and buses, less than 2032 mm in overall width. This discrepancy exists due to the language from which the ratio requirements are derived. SAE J586 FEB84, *Stop Lamps for use on Motor Vehicles Less Than 2032 mm in Overall Width,* incorporated by reference in the current version of FMVSS No. 108 states in Section 5.1.5.3, ''When a tail lamp is combined with the stop lamp, the stop lamp shall not be less than three times the luminous intensity of the tail lamp at any test point; except that at H–V, H–5L, H–5R, and 5U–V, the stop lamp shall not be less than five times the luminous intensity of the tail lamp.'' Similarly, SAE J1398 MAY85, *Stop Lamps for use on Motor Vehicles 2032 mm or More in Overall Width,* incorporated by reference in the current version of FMVSS No. 108, states in Section 5.1.5.2, ''When a tail lamp is combined with the stop lamp, the stop lamp shall not be less than three times the luminous intensity of the tail lamp at any test point; except that at H–V, H–5R, and 5U–V, the stop lamp shall not be less than five times the luminous intensity of the tail lamp.'' Thus, the requirements are identical with the exception of test point

[33] In the final rule we have elected to implement a suggestion by Calcoast to identify photometric test points consistently in the photometric requirements tables. We have chosen to list lateral values in the left column and vertical values in the right column. Thus the H–5L test point of Table IX of the NPRM appears as test point 5L–H in the final rule.

H–5L. By not specifically identifying H–5L as a test point requiring a 5:1 ratio, SAE J1398 MAY85, by default, requires a 3:1 ratio.

SAE J585e, *Tail Lamps (Rear Position Lamps),* September 1977, also incorporated by reference in the current version of FMVSS No. 108 (applicable to all vehicles), also contains a ratio requirement. Footnote 4 to Table 1 of that document states, ''When a tail lamp is combined with the turn signal lamp or the stop lamp, the signal lamp or stop lamp shall not be less than three times the candlepower [34] of the tail lamp at any test point; except that at H–V, H–5L, H–5R, and 5U–V, the signal lamp or stop lamp shall not be less than five times the candlepower of the tail lamp.'' Thus, there is a documented conflict regarding the ratio requirement at the H–5L test point on combined stop lamps and taillamps used on wide vehicles. We resolved this in the final rule by maintaining the dual requirements stated in the NPRM. That is the ratio of stop lamp intensity to taillamp intensity at that test point remains 3:1 for lamps installed on multipurpose passenger vehicles, trucks, trailers, and buses, of 2032 mm or more in overall width, and 5:1 for lamps installed on all passenger cars and motorcycles and all multipurpose passenger vehicles, trucks, trailers, and buses, less than 2032 mm in overall width.

Although we believe there is ample evidence that the 3:1 ratio was never intended by SAE, to rectify this error at this time would constitute a substantive change and therefore be beyond the scope of the FMVSS No. 108 rewrite. We may address this issue in the near future.

Table X Side Marker Photometry Requirements

Footnote 1 was revised to be more consistent with paragraph S7.4.1.1 of the NPRM (paragraph S7.4.13.2 of the final rule) concerning the widths of vehicles that can use reduced photometric compliance angles between the front and rear side marker. Footnote 1 now reads, ''Where a side marker lamp installed on a motor vehicle less than 30 feet in overall length and less than 80 inches (2 m) in overall width has the lateral angle nearest the other required side marker lamp on the same side of the vehicle reduced from 45° by design as specified by S7.4.13.2, the photometric intensity measurement may be met at the lesser angle.'' The change in width from 2032 mm to 80 inches (2 m) was made to be faithful to Footnote b of SAE J592e, *Clearance, Side Marker, and Identification Lamps,* July 1972.

Table XI Clearance and Identification Lamps Photometry Requirements

Koito and AAM commented that Footnote 3 to Table XI did not include the limitation on a turn signal lamp combined with a red clearance lamp as required by SAE J592e, July 1972, Table 1 Footnote ''a'', incorporated by reference by the current version of FMVSS No. 108. This is corrected in the final rule.

Grote believed that the maximum photometric intensity for a red clearance lamp should be 18 cd. We disagree because SAE J592e, July 1972, incorporated by reference in the current version of FMVSS No. 108, states in Footnote ''a'' to Table 1 that 15 cd is the maximum allowed for a red clearance lamp.

Table XII Backup Lamp Photometry Requirements

Guide commented that Footnotes 2 and 3 only apply to groups 1, 2 5, and 6. We agree. Figure 2, Footnote 1 of the current version of Standard No. 108 is the source of these requirements and the Guide assertion is consistent with that figure. We revised Table XII accordingly in the final rule.

Guide suggested replacing the phrase ''same or symmetrically opposite design'' in Footnote 2 of Table XII of the NPRM with the phrase ''symmetrical beam pattern'' and also replacing the phrase ''differing design'' in Footnote 3 of Table XII with the phrase ''asymmetrical beam pattern'', claiming the terminology of the NPRM is vague. Guide offered no argument as to why the suggested replacement phrases would improve understanding. Since the language of the NPRM is faithful to the current version of FMVSS No. 108, we are not implementing its suggestion in the final rule.

We have added the term ''Each Lamp'' after the title ''Two Lamp Systems'' in Table XII of the final rule to clarify that each lamp of a two lamp system is to be designed to conform to either the individual test point photometry requirements or the group photometry requirements.

Table XIII–a Motorcycle Turn Signal Lamp Alternative Photometry Requirements

Table XIII–b Motor Driven Cycle Stop Lamp Alternative Photometry Requirements

Table XIII of the NPRM, License Plate Lamp Target Locations, has been redesignated as Figure 19 in the final rule. A new Table XIII has been created that includes the alternative stop lamp requirements for motor driven cycles, which were previously part of Table IX in the NPRM and the optional turn signal requirements for motorcycles noted in paragraphs S7.1.1.1 and S7.1.2.1 of the NPRM, but not previously tabularized.

Table XIV Parking Lamp Photometry Requirements

There were no comments submitted that impacted Table XIV beyond those previously mentioned.

Table XV High-Mounted Stop Lamp Photometry Requirements

AAM suggested that Footnote 4 of Table XV be incorporated directly into the table where the maximum photometric intensity is stated. AAM offered no arguments to support this request and we can see no compelling reason to implement it. Table XV appears in the final rule identical to the NPRM.

Table XVI

As previously mentioned, Table XVI of the NPRM has been partitioned into three sections, Table XVI–a, *Reflex Reflector Photometry Requirements,* Table XVI–b, *Additional Photometry Requirements for Conspicuity Reflex Reflectors,* and Table XVI–c, *Retroreflective Sheeting Photometry Requirements.* The content of these tables in the final rule is identical to that of the NPRM.

Table XVII School Bus Signal Lamp Photometry

There were no comments submitted that impacted Table XVII.

Table XVIII Headlamp Upper Beam Photometry Requirements

There were no comments submitted that impacted Table XVIII beyond those previously mentioned.

Table XIX Headlamp Lower Beam Photometry Requirements

Table XIX, *Headlamp Lower Beam Photometry Requirements,* has been split into Tables XIX–a, XIX–b, and XIX–c in the final rule.

GE, Honda, AAM, and Koito identified that the maximum photometric intensity value of 2,500 cd for the 0.5D–1.5L to L test location of a LB4M beam was inadvertently omitted from Table XIX of the NPRM. We agree and this value has been added in the final rule.

Guide suggested a reduction in the lateral limits in the NPRM for photometry of the 10°U to 90°U glare

[34] The term ''candlepower'' used in this context means the contemporary unit of measurement used to express the luminous intensity attribute.

area from 90°L to 90°R to 45°L to 45°R but offered no basis to support this request. Such a revision would be substantive and beyond the scope of the rewrite, therefore this suggestion was not pursued in the final rule.

Table XX Motorcycle and Motor Driven Cycle Headlamp Photometry Requirements

Honda and Koito identified that the maximum photometric intensity value of 12,500 cd for the 4D–4R test location for a motor driven cycle headlamp was inadvertently placed in the minimum intensity column of Table XX of the NPRM. The value has been placed in the correct location in the final rule.

AAM suggested that the column heading shown for lower beam headlamps be replicated for upper beam headlamps. We agree that doing so would improve clarity and have incorporated the headings in Table XX of the final rule.

Table XXI Associated Equipment Physical Test Requirements (Table eliminated in final rule)

The recognition that the tabular method of organization did not work well for lengthy textual requirements provided the rationale for moving the associated equipment physical test requirements content of Table XXI of the NPRM to paragraph S14.9 of the regulatory text in the final rule.

The substantive issues raised by public comment and the revisions to associated equipment physical test requirements are discussed under paragraph S14.9.

Table XXII Lamp and Reflective Devices Physical Test Requirements (Table eliminated in final rule)

The recognition that the tabular method of organization did not work well for lengthy textual requirements provided the rationale for moving the lamp and reflective devices physical test requirements content of Table XXII of the NPRM to paragraphs S14.3, S14.4, and S14.5 of the regulatory text in the final rule.

The substantive issues raised by public comment and the revisions to lamp and reflective devices physical test requirements are discussed under those sections.

Table XXIII Headlamp Physical Test Requirements (Table eliminated in final rule)

The recognition that the tabular method of organization did not work well for lengthy textual requirements provided the rationale for moving the headlamp physical test requirements content of Table XXIII of the NPRM to paragraphs S14.6, S14.7, and S14.8 of the regulatory text in the final rule.

The substantive issues raised by public comment and the revisions to headlamp physical test requirements are discussed under those sections.

Figures

Figures 1 through 12 and 15 through 18

There were no comments submitted that impacted Figures 1 through 12 or Figures 15 through 18.

Figure 13 Tractor Conspicuity Treatment Examples

TMA commented that Figure 31 of the current version of FMVSS No. 108, rather than Figure 13 of the NPRM, better illustrated that the right angle white conspicuity treatment element required on the upper rear outside corners of truck tractors may not be continuous if cab mounted hardware makes this impractical. We have revised Figure 13 to illustrate this condition in the final rule.

Figure 14 92 x 150 mm Headlamp Aim Deflection Test Setup

GE identified 13 omissions or errors in Figure 14 of the NPRM that were corrected in the final rule to agree with the source document, Figure 16 of the current version of FMVSS No. 108.

Figure 15 Types G & H Headlamp Aim Deflection Test Setup

GE identified an omission in Figure 15 that was corrected to agree with the source document, Figure 22 of the current version of FMVSS No. 108.

Figure 19 License Plate Lamp Target Locations

Figure 19, *License Plate Lamp Target Locations*, was designated as Table XIII in the NPRM. The supplementary response from the AAM/ASSN suggested changing it to be a figure. Its purpose is illustrative, so it is most appropriately designated as a figure.

AAM requested that the English units of measurement, which were part of the source drawings, SAE J587 OCT81 Figures 1 and 2, but not included in Table XIII of the NPRM, be restored. This was done, as Figure 19 is dimensioned in both metric and English units in the final rule.

Figure 20 License Plate Lamp Measurement of Incident Light Angle

AAM requested that Figure 3 of SAE J587 OCT81, *License Plate Lamps,* be included to better illustrate the incident light angle requirement of paragraph S7.7.1.1 of the NPRM. We agree and have included it as Figure 20, *License Plate Lamp Measurement of Incident Light Angle*, in the final rule. It is referenced in paragraph S7.7.15.4 of the final rule.

Figure 21 Vibration Test Machine

AAM requested that SAE J577, *Vibration Test Machine,* April 1964, be directly incorporated into FMVSS No. 108 rather than to continue to be incorporated by reference. Figure 1, *Vibration Test Machine*, and Table 1, *Cam Profile Radii*, (from SAE J577) were redrawn for the final rule as Figure 21, *Vibration Test Machine*.

Figure 22 Flasher Standard Test Circuit

Figure 22 includes the standard test circuit of SAE J823b, *Flasher Test Equipment*, April 1968. The procedures of SAE J823b have also been incorporated into paragraph S14.9 of the final rule, allowing the subreference by incorporation of this standard to now be eliminated from FMVSS No. 108.

IV. The Final Rule

After careful consideration of public comments on the NPRM, the agency has decided to publish a final rule to amend 49 CFR Part 564 and FMVSS No. 108 as discussed below:

A. 49 CFR Part 564

We are relocating figures addressing sealed beam headlamps that currently reside in FMVSS No. 108 and SAE J1383 APR85 into a newly created Appendix C of 49 CFR Part 564. We have listed those specific figures and where they currently reside in FMVSS No. 108 or SAE J1383 APR85 in the reference document in Appendix C of this notice. In addition, we are making the applicable changes to the scope and purpose provisions of Part 564 to account for the newly formed Appendix C. Unlike Appendices A and B, there will be no further additions to, or modifications of, the sealed beam headlamp figures in Appendix C.

B. 49 CFR Part 571.108

We are amending Standard No. 108 by: (1) Reorganizing the regulatory text so that it provides a more straight-forward and logical presentation of the applicable regulatory requirements; (2) including important agency interpretations of the existing requirements; and (3) reducing reliance on third-party documents incorporated by reference. This has resulted in additional tables and figures being added to the standard. In addition, the structure of the standard has been changed to present the requirements in a more standardized and user-friendly manner.

V. Benefits and Costs

Because this proposal only reorganizes the existing requirements of the standard, we do not anticipate that there would be any costs or benefits associated with this rulemaking action to implement an administrative rewrite of FMVSS No. 108, other than the benefits associated with a clearer, easier-to-read standard. None of the public comments identified any instances where the rewritten standard would have a cost effect. Accordingly, the agency did not conduct a separate economic analysis for this rulemaking.

VI. Rulemaking Analyses and Notices

A. Vehicle Safety Act

Under 49 U.S.C. Chapter 301, *Motor Vehicle Safety* (49 U.S.C. 30101 *et seq.*), the Secretary of Transportation is responsible for prescribing motor vehicle safety standards that are practicable, meet the need for motor vehicle safety, and are stated in objective terms.[35] These motor vehicle safety standards set the minimum level of performance for a motor vehicle or motor vehicle equipment to be considered safe.[36] When prescribing such standards, the Secretary must consider all relevant, available motor vehicle safety information.[37] The Secretary must also consider whether a proposed standard is reasonable, practicable, and appropriate for the type of motor vehicle or motor vehicle equipment for which it is prescribed and the extent to which the standard will further the statutory purpose of reducing traffic accidents and associated deaths.[38] The responsibility for promulgation of Federal motor vehicle safety standards has been delegated to NHTSA. [39]

FMVSS No. 108, *Lamps, Reflective Devices, and Associated Equipment*, was originally established in a final rule published in the **Federal Register** on February 3, 1967 (32 FR 2408). The purpose of the standard is to reduce traffic accidents and deaths and injuries resulting from traffic accidents, by providing adequate illumination of the roadway, and by enhancing the conspicuity of motor vehicles on the public roads so that their presence is perceived and their signals understood, both in daylight and in darkness or other conditions of reduced visibility. Since the time of the standard's initial promulgation, the agency has undertaken numerous rulemakings and interpretations related to Standard No. 108, in many cases to deal with the emergence of new lighting technologies. In recent years, concerns have been raised that after nearly four decades of amendment, navigating the requirements of the standard has become increasingly difficult. Therefore, in this final rule, the agency is implementing an administrative rewrite of Standard No. 108 in order to improve its structure and clarity, without changing any of its existing substantive requirements. In preparing this final rule, the agency carefully considered the statutory requirements of 49 U.S.C. Chapter 301.

First, this final rule reflects the agency's careful consideration and analysis of all existing regulatory provisions of FMVSS No. 108, as well as salient letters of interpretation related to that standard. In developing the substantive provisions of the standard over the years, the agency considered all relevant, available motor vehicle safety information, including available research, testing results, and other information related to various technologies. This administrative rewrite does not change any of these existing provisions or the underlying basis therefore. The final rule also reflects the agency's consideration of information offered in public comments on the notice of proposed rulemaking which preceded today's final rule.

Second, to ensure that the requirements of FMVSS No. 108 are practicable (as well as consistent with our safety objectives), the agency evaluated the cost, availability, and suitability of the standard's provisions, both when initially adopted and during subsequent amendments. As noted above, the changes resulting from this final rule are administrative in nature and would not impact the costs and benefits of the standard. In sum, we believe that this final rule is practicable, and we expect it to maintain the benefits of Standard No. 108.

Third, the regulatory text following this preamble is stated in objective terms in order to specify precisely what performance is required and how performance will be tested to ensure compliance with the standard. In certain cases, the final rule modifies the language of the standard to improve clarity or to incorporate existing interpretations, again without changing the substance of the existing requirements.

Fourth, we believe that this final rule meets the need for motor vehicle safety by clarifying the safety standard, thereby making it easier for regulated parties to comply with all applicable requirements. The impacts of the substantive provisions on vehicle safety were discussed at the time of adoption of those provisions.

Finally, we believe that this final rule is reasonable and appropriate for motor vehicles subject to the applicable requirements. As discussed elsewhere in this notice, the modifications to the standard resulting from this final rule are administrative in nature. It does not affect the substance of the requirements or the bases for those requirements, as articulated in earlier rulemakings. Accordingly, we believe that this final rule is appropriate for covered vehicles that are or become subject to these provisions of FMVSS No. 108 because it furthers the agency's objective of preventing crash-related deaths and serious injuries by ensuring adequate illumination of roadways and enhanced conspicuity of motor vehicles.

B. Executive Order 12866 and DOT Regulatory Policies and Procedures

Executive Order 12866, ''Regulatory Planning and Review'', provides for making determinations whether a regulatory action is ''significant'' and therefore subject to OMB review and to the requirements of the Executive Order. The Order defines a ''significant regulatory action'' as one that is likely to result in a rule that may:

(1) Have an annual effect on the economy of $100 million or more or adversely affect in a material way the economy, a sector of the economy, productivity, competition, jobs, the environment, public health or safety, or State, local, or Tribal governments or communities;

(2) Create a serious inconsistency or otherwise interfere with an action taken or planned by another agency;

(3) Materially alter the budgetary impact of entitlements, grants, user fees, or loan programs or the rights and obligations of recipients thereof; or

(4) Raise novel legal or policy issues arising out of legal mandates, the President's priorities, or the principles set forth in the Executive Order.

This rulemaking document was not reviewed by the Office of Management and Budget under Executive Order 12866. The rule is not considered to be significant within the meaning of E.O. 12866 or the Department of Transportation's Regulatory Policies and Procedures (44 FR 11034 (Feb. 26, 1979)). As stated above in Section V, *Benefits and Costs*, this final rule is not expected to require parties subject to the requirements of the safety standard to alter their existing practices for certifying compliance with Standard

[35] 49 U.S.C. 30111(a).

[36] 49 U.S.C. 30102(a)(9).

[37] 49 U.S.C. 30111(b).

[38] Id.

[39] 49 U.S.C. 105 and 322; delegation of authority at 49 CFR 1.50.

No. 108 or to increase costs of compliance, because the final rule merely reorganizes and clarifies existing requirements. Accordingly, the agency has not prepared any supplemental economic analysis to accompany this rulemaking document.

C. Regulatory Flexibility Act

Pursuant to the Regulatory Flexibility Act (5 U.S.C. 601 *et seq.*, as amended by the Small Business Regulatory Enforcement Fairness Act (SBREFA) of 1996), whenever an agency is required to publish a notice of rulemaking for any proposed or final rule, it must prepare and make available for public comment a regulatory flexibility analysis that describes the effect of the rule on small entities (*i.e.*, small businesses, small organizations, and small governmental jurisdictions). The Small Business Administration's regulations at 13 CFR Part 121 define a small business, in part, as a business entity ''which operates primarily within the United States.'' (13 CFR 121.105(a)). No regulatory flexibility analysis is required if the head of an agency certifies the rule will not have a significant economic impact on a substantial number of small entities. SBREFA amended the Regulatory Flexibility Act to require Federal agencies to provide a statement of the factual basis for certifying that a rule will not have a significant economic impact on a substantial number of small entities.

NHTSA has considered the effects of this final rule under the Regulatory Flexibility Act. I certify that this final rule will not have a significant economic impact on a substantial number of small entities. The rationale for this certification is that the present final rule does not make any substantive changes to this safety standard, so affected parties will be able to continue current practices without change. Accordingly, we do not anticipate that this final rule will have a significant economic impact on a substantial number of small entities.

D. Executive Order 13132 (Federalism)

NHTSA has examined today's final rule pursuant to Executive Order 13132, ''Federalism'' and concluded that no additional consultation with States, local governments, or their representatives is mandated beyond the rulemaking process. The agency has concluded that the rule does not have Federalism implications, because the rule does not have ''substantial direct effects on the States, on the relationship between the national government and the States, or on the distribution of power and the responsibilities among the various levels of government.''

Further, no consultation is needed to discuss the preemptive effect of today's rule. NHTSA rules can have preemptive effect in at least two ways. First, the National Traffic and Motor Vehicle Safety Act contains an express preemptive provision: ''When a motor vehicle safety standard is in effect under this chapter, a State or a political subdivision of a State may prescribe or continue in effect a standard applicable to the same aspect of performance of a motor vehicle or motor vehicle equipment only if the standard is identical to the standard prescribed under this chapter.'' 49 U.S.C. 30102(b)(1).

In addition to the express preemption noted above, the Supreme Court has also recognized that State requirements imposed on motor vehicle manufacturers, including sanctions imposed by State tort law, can stand as an obstacle to the accomplishment and execution of a NHTSA safety standard. When such a conflict is discerned, the Supremacy Clause of the Constitution makes the State requirements unenforceable. *See Geier* v. *American Honda Motor Co.*, 529 U.S. 861 (2000).

NHTSA does not believe that such conflicts are likely to arise from today's rulemaking, because this final rule only results in an administrative rewrite of the existing requirements of FMVSS No. 108. However, if such a conflict were to become evident, NHTSA may opine on such conflicts in the future, if warranted. *See id.* at 883–86.

E. Executive Order 12988 (Civil Justice Reform)

With respect to the review of the promulgation of a new regulation, section 3(b) of Executive Order 12988, ''Civil Justice Reform,'' requires that Executive agencies make every reasonable effort to ensure that the regulation: (1) Clearly specifies the preemptive effect; (2) clearly specifies the effect on existing Federal law or regulation; (3) provides a clear legal standard for affected conduct, while promoting simplification and burden reduction; (4) clearly specifies the retroactive effect, if any; (5) adequately defines key terms; and (6) addresses other important issues affecting clarity and general draftsmanship under guidelines issued by the Attorney General. This document is consistent with that requirement. Pursuant to this Order, NHTSA notes as follows. The preemptive effect of this rule is discussed above. NHTSA notes further that there is no requirement that individuals submit a petition for reconsideration or pursue other administrative proceeding before filing suit in court.

F. Executive Order 13045 (Protection of Children From Environmental Health and Safety Risks)

Executive Order 13045, ''Protection of Children from Environmental Health and Safety Risks,'' applies to any rule that: (1) Is determined to be ''economically significant'' as defined under Executive Order 12866, and (2) concerns an environmental, health, or safety risk that the agency has reason to believe may have a disproportionate effect on children. If the regulatory action meets both criteria, the agency must evaluate the environmental health or safety effects of the planned rule on children, and explain why the planned regulation is preferable to other potentially effective and reasonably feasible alternatives considered by the agency.

This final rule is not subject to E.O. 13045 because it is not an economically significant regulatory action under Executive Order 12866, and because it does not involve decisions based upon health and safety risks that disproportionately affect children.

G. Paperwork Reduction Act

Under the Paperwork Reduction Act of 1995 (PRA), a person is not required to respond to a collection of information by a Federal agency unless the collection displays a valid OMB control number. This final rule does not contain any collection of information requirements requiring review under the PRA.

H. National Technology Transfer and Advancement Act

Section 12(d) of the National Technology Transfer and Advancement Act of 1995 (NTTAA), Public Law 104–113, (15 U.S.C. 272) directs the agency to evaluate and use voluntary consensus standards in its regulatory activities unless doing so would be inconsistent with applicable law or is otherwise impractical. Voluntary consensus standards are technical standards (*e.g.*, materials specifications, test methods, sampling procedures, and business practices) that are developed or adopted by voluntary consensus standards bodies, such as the Society of Automotive Engineers. The NTTAA directs us to provide Congress (through OMB) with explanations when we decide not to use available and applicable voluntary consensus standards. The NTTAA does not apply to symbols.

This final rule does not adopt or reference any new industry or consensus standards that were not already present in Standard No. 108 (although in several cases, relevant requirements from such standards are now included directly in the standard, rather than being incorporated by reference). The agency's statements regarding the rationale for the use (or non-use) of information from third-party standards, as presented in prior rulemakings, remain unchanged.

I. Unfunded Mandates Reform Act

Section 202 of the Unfunded Mandates Reform Act of 1995 (UMRA) requires Federal agencies to prepare a written assessment of the costs, benefits, and other effects of proposed or final rules that include a Federal mandate likely to result in the expenditure by State, local, or tribal governments, in the aggregate, or by the private sector, of more than $100 million annually (adjusted for inflation with base year of 1995 (so currently $126 million in 2006 dollars)). Before promulgating a NHTSA rule for which a written statement is needed, section 205 of the UMRA generally requires the agency to identify and consider a reasonable number of regulatory alternatives and adopt the least costly, most cost-effective, or least burdensome alternative that achieves the objectives of the rule. The provisions of section 205 do not apply when they are inconsistent with applicable law. Moreover, section 205 allows the agency to adopt an alternative other than the least costly, most cost-effective, or least burdensome alternative if the agency publishes with the final rule an explanation of why that alternative was not adopted.

This final rule is not anticipated to result in the expenditure by State, local, or tribal governments, in the aggregate, or by the private sector in excess of $112 million annually. Instead, the cost impact of this administrative rewrite of Standard No. 108 is expected to be $0, because it does not change or increase the cost of existing requirements. Therefore, the agency has not prepared an economic assessment pursuant to the Unfunded Mandates Reform Act.

J. National Environmental Policy Act

NHTSA has analyzed this rulemaking action for the purposes of the National Environmental Policy Act. The agency has determined that implementation of this action would not have any significant impact on the quality of the human environment.

K. Regulatory Identifier Number (RIN)

The Department of Transportation assigns a regulation identifier number (RIN) to each regulatory action listed in the Unified Agenda of Federal Regulations. The Regulatory Information Service Center publishes the Unified Agenda in April and October of each year. You may use the RIN contained in the heading at the beginning of this document to find this action in the Unified Agenda.

L. Privacy Act

Please note that anyone is able to search the electronic form of all comments received into any of our dockets by the name of the individual submitting the comment (or signing the comment, if submitted on behalf of an association, business, labor union, etc.). You may review DOT's complete Privacy Act Statement in the **Federal Register** published on April 11, 2000 (Volume 65, Number 70; Pages 19477–78), or you may visit *http://dms.dot.gov.*

List of Subjects in 49 CFR Parts 564 and 571

Imports, Incorporation by reference, Motor vehicle safety, Motor vehicles, Report and recordkeeping requirements.

■ In consideration of the foregoing, NHTSA is amending 49 CFR parts 564 and 571 as follows:

PART 564—REPLACEABLE LIGHT SOURCE INFORMATION

■ 1. Part 564 is revised to read as follows:

PART 564—REPLACEABLE LIGHT SOURCE AND SEALED BEAM HEADLAMP INFORMATION

Sec.

564.1 Scope.
564.2 Purposes.
564.3 Applicability.
564.4 Definitions.
564.5 Information filing; agency processing of filings.
Appendix A to Part 564—Information to be Submitted for Replaceable Light Sources
Appendix B to Part 564—Information to be Submitted for Long Life Replaceable Light Sources of Limited Definition
Appendix C to Part 564—Information Applicable to Standardized Sealed Beam Headlamp Units

Authority: 49 U.S.C. 322, 30111, 30115, 30117, 30166; delegation of authority at 49 CFR 1.50.

§ 564.1 Scope.

This part requires the submission of dimensional, electrical specification, and marking/designation information as specified in Appendices A and B of this part, for original equipment replaceable light sources used in motor vehicle headlighting systems. This part also serves as a repository for design information as specified in Appendix C of this part, for original equipment and replacement standardized sealed beam units used in motor vehicle headlighting systems.

§ 564.2 Purposes.

The purposes of this part are achieved through its Appendices:

(a) The purposes of Appendix A of this part are to ensure:

(1) The availability to replacement light source manufacturers of the manufacturing specifications of original equipment light sources so that replacement light sources are interchangeable with original equipment light sources and provide equivalent performance, and

(2) That redesigned or newly developed light sources are designated as distinct, different, and noninterchangeable with previously existing light sources.

(b) The purposes of Appendix B of this part are to ensure:

(1) That original equipment light sources are replaceable and that replacement light sources provide equivalent performance, and

(2) That redesigned or newly developed light sources are designated as distinct, different, and noninterchangeable with previously existing light sources.

(c) The purpose of Appendix C of this part is to ensure the availability to original equipment and replacement sealed beam headlamp manufacturers of the manufacturing specifications of standardized sealed beam headlamp units used on motor vehicles so that all sealed beam headlamp units of a specific type are interchangeable with all other units of that same type and provide equivalent performance.

§ 564.3 Applicability.

This part applies to replaceable light sources used as original equipment, and standardized sealed beam headlamp units used as original equipment and replacement equipment in motor vehicle headlighting systems.

§ 564.4 Definitions.

All terms defined in the Act and the regulations and standards issued under its authority are used as defined therein.

§ 564.5 Information filing; agency processing of filings.

(a) Each manufacturer of a motor vehicle, original equipment headlamp, or original equipment headlamp replaceable light source, which intends to manufacture a replaceable light

source as original equipment or to incorporate a replaceable light source in its headlamps or motor vehicles, shall furnish the information specified in Appendix A. If the rated laboratory life of the light source is not less than 2,000 hours, the manufacturer shall furnish the information specified in either Appendix A or Appendix B of this part. Information shall be furnished to: Associate Administrator for Rulemaking, National Highway Traffic Safety Administration, 1200 New Jersey Avenue, SE., West Building, Washington, DC 20590 Attention: Part 564-Replaceable Light Source Information (unless the Agency has already filed such information in Docket No. NHTSA 98–3397).

(b) The manufacturer shall submit such information not later than 60 days before it intends to begin manufacture of the replaceable light source to which the information applies, or to incorporate the light source into a headlamp, or to incorporate the light source into a motor vehicle of its manufacture. Each submission shall consist of one original set of information and ten legible reproduced copies, all on 8½ by 11-inch paper.

(c) The Associate Administrator promptly reviews each submission and informs the manufacturer not later than 30 days after its receipt whether the submission has been accepted. Upon acceptance, the Associate Administrator files the information in Docket No. NHTSA 98–3397. The Associate Administrator does not accept any submission that does not contain all the information specified in Appendix A or Appendix B of this part, or whose accompanying information indicates that any new light source which is the subject of a submission is interchangeable with any replaceable light source for which the agency has previously filed information in Docket No. NHTSA 98–3397.

(d) A manufacturer may request modification of a light source for which information has previously been filed in Docket No. NHTSA 98–3397, and the submission shall be processed in the manner provided by § 564.5(c). A request for modification shall contain the following:

(1) All the information specified in Appendix A or Appendix B of this part that is relevant to the modification requested,

(2) The reason for the requested modification,

(3) A statement that the use of the light source as modified will not create a noncompliance with any requirement of Federal Motor Vehicle Safety Standard No. 108 (49 CFR 571.108) when used to replace an unmodified light source in a headlamp certified by its manufacturer as conforming to all applicable Federal motor vehicle safety standards, together with reasons in support of the statement; and

(4) Information demonstrating that the modification would not adversely affect interchangeability with the original light source.

After review of the request for modification, the Associate Administrator may seek further information either from the manufacturer or through a notice published in the **Federal Register** requesting comment on whether a modified light source incorporating the changes requested will create a noncompliance with Federal Motor Vehicle Safety Standard No. 108 when substituted for an unmodified light source. If the Associate Administrator seeks public comment on a submission (s)he shall publish a notice stating whether (s)he has accepted or rejected the submission. If a submission is accepted, the Associate Administrator files the information in Docket No. NHTSA 98–3397. If a submission is rejected, a manufacturer may submit information with respect to it, as provides in paragraph 564.5(a), for consideration as a new light source after such changes as will insure that it is not interchangeable with the light source for which modification was originally requested.

(e) Information submitted under this section is made available by NHTSA for public inspection as soon as practicable after its receipt, but not later than the date on which a vehicle equipped with a new or revised replaceable light source is offered for sale.

Appendix A to Part 564—Information to be Submitted for Replaceable Light Sources

I. Filament or Discharge Arc Position Dimensions and Tolerances Using Either Direct Filament or Discharge Arc Dimensions or the Three Dimensional Filament or Discharge Arc Tolerance Box

A. Lower beam filament dimensions or filament tolerance box dimensions and relation of these to the bulb base reference plane and centerline.

1. Axial location of the filament centerline or the filament tolerance box relative to the bulb base reference plane.

2. Vertical location of the filament centerline or the filament tolerance box relative to the bulb base centerline.

3. Transverse location of the filament centerline or the filament tolerance box relative to the bulb base centerline.

4. Filament tolerance box dimensions, if used.

B. Upper beam filament dimensions or the filament tolerance box dimensions, and relation of these to the bulb base reference plane and centerline.

1. Axial location of the filament centerline or the filament tolerance box relative to the bulb base reference plane.

2. Vertical location of the filament centerline or the filament tolerance box relative to the bulb base centerline.

3. Transverse location of the filament centerline or the filament tolerance box relative to the bulb base centerline.

4. Filament tolerance box dimensions, if used.

C. If the replaceable light source has both a lower beam and an upper beam filament, the dimensional relationship between the two filament centerlines or the filament tolerance boxes may be provided instead of referencing the upper beam filament centerline or filament tolerance box to the bulb base centerline or reference plane.

D. For a light source using excited gas mixtures as a filament, necessary fiducial information and specifications including electrode position dimensions and tolerance information that provide similar location and characteristics information required by paragraphs A, B, and C of this section I for light sources using a resistive type filament.

II. Dimensions Pertaining to Filament Capsule and Capsule Supports

A. Maximum length from bulb base reference plane to tip of filament capsule.

B. Maximum radial distances from bulb base centerline to periphery of filament capsule and/or supports.

C. Location of black cap relative to low beam filament centerline, filament tolerance box or other to-be-specified reference.

D. Size, length, shape, or other pertinent features and dimensions for providing undistorted walls for the filament capsule.

III. Bulb Base Interchangeability Dimensions and Tolerance

A. Angular locations, diameters, key/keyway sizes, and any other interchangeability dimensions for indexing the bulb base in the bulb holder.

B. Diameter, width, depth, and surface finish of seal groove, surface, or other pertinent sealing features.

C. Diameter of the bulb base at the interface of the base and its perpendicular reference surface.

D. Dimensions of features related to retention of the bulb base in the bulb holder such as tabs, keys, keyways, surfaces, etc.

IV. Bulb Holder Interchangeability Dimensions and Tolerance

A. Mating angular locations, diameters, key/keyway sizes, and any other interchangeability dimensions for indexing the bulb base in the bulb holder.

B. Mating diameter, width, depth, and surface finish of seal groove, surface, or other pertinent sealing features.

C. Mating diameter of the bulb holder at the interface of the bulb base aperture and its perpendicular reference surface.

D. Mating dimensions of features related to retention of the bulb base in the bulb holder such as tabs, keys, keyways, surfaces, etc.

V. Wiring Harness Connector to Bulb Base Interchangeability Dimensions and Tolerances

A. Maximum depth of harness connector insertion into bulb base.

B. Location of electrical pins in bulb base.

C. Dimensions of electrical pins in bulb base—length, diameter, width, thickness and etc.

D. Fit of harness connector into bulb base providing all necessary dimensions, key/keyway controls, and dimensions, tapers etc.

E. Dimensions and location of locking features for wiring harness connector to bulb base.

F. Identification of upper beam, lower beam, and common terminals.

VI. Seal Specifications (if Replaceable Light Source is Intended to be of a Sealed Base Design)

A. Type.

B. Material.

C. Dimensions.

VII. Electrical Specifications for Each Filament at 12.8 Volts

A. Maximum power (in watts).

B. Luminous Flux with tolerance (in lumens) with black cap if so equipped, measured in accordance with the document: Illuminating Engineering Society of North America, LM–45; IES Approved Method for Electrical and Photometric Measurements of General Service Incandescent Filament Lamps (April 1980). This incorporation by reference was approved by the Director of the Federal Register in accordance with 5 U.S.C. 552(a) and 1 CFR Part 51. Copies may be obtained from the Illuminating Engineering Society of North America, 345 East 47th St., New York, NY 10017. Copies may be inspected at the National Highway Traffic Safety Administration, Technical Information Services, 1200 New Jersey Avenue, Washington, DC 20590, or at the National Archives and Records Administration (NARA). For information on the availability of this material at NARA, call 202–741–6030, or go to: *http://www.archives.gov/federal_register/code_of_ federal regulations/ibr_locations.html.*

VIII. Bulb Markings/Designation—ANSI NUMBER, ECE IDENTIFIER, MANUFACTURER'S PART NUMBER, INDIVIDUALLY OR IN ANY COMBINATION

IX. All Other Information, Dimensions or Performance Specifications Necessary for Interchangeability, Replaceability, or System Test Purposes not Listed in Sections I Through VIII

IF A BALLAST IS REQUIRED FOR OPERATION, A COMPLETE LISTING OF THE REQUIREMENTS AND PARAMETERS BETWEEN THE LIGHT SOURCE AND BALLAST, AND BALLAST AND THE VEHICLE SHALL ALSO BE PROVIDED.

Appendix B to Part 564—Information to be Submitted for Long Life Replaceable Light Sources of Limited Definition

I. Filament or Discharge Arc Position Dimensions and Tolerances Using Either Direct Filament or Discharge Arc Dimensions or the Three Dimensional Filament Discharge Arc Tolerance Box

A. Lower beam filament or discharge arc dimensions or filament or discharge arc tolerance box dimensions and relation of these to the bulb base reference plane and centerline.

1. Axial location of the filament or discharge arc centerline or the filament or discharge arc tolerance box relative to the bulb base reference plane.

2. Vertical location of the filament or discharge arc centerline or the filament or discharge arc tolerance box relative to the bulb base centerline.

3. Transverse location of the filament or discharge arc centerline or the filament or discharge arc tolerance box relative to the bulb base centerline.

4. Filament or discharge arc tolerance box dimensions, if used.

B. Upper beam filament or discharge arc dimensions or the filament or discharge arc tolerance box dimensions and relation of these to the bulb base reference plane and centerline.

1. Axial location of the filament or discharge arc centerline or the filament or discharge arc tolerance box relative to the bulb base reference plane.

2. Vertical location of the filament or discharge arc centerline or the filament or discharge arc tolerance box relative to the bulb base centerline.

3. Transverse location of the filament or discharge arc centerline or the filament or discharge arc tolerance box relative to the bulb base centerline.

4. Filament or discharge arc tolerance box dimensions, if used.

C. If the replaceable light source has both a lower beam and upper beam filament or discharge arc, the dimensional relationship between the two filament or discharge arc centerlines or the filament or discharge arc tolerance boxes may be provided instead of referencing the upper beam filament or discharge arc centerline or filament or discharge arc tolerance box to the bulb base centerline or reference plane.

D. For a light source using excited gas mixtures as a filament, necessary fiducial information and specifications including electrode position dimensions, and tolerance information that provide similar location and characteristics information required by paragraphs A, B, and C of this section I for light sources using a resistive type filament.

II. Bulb Base Interchangeability Dimensions and Tolerance

A. Angular locations, diameters, key/keyway sizes, and any other interchangeability dimensions for indexing the bulb base in the bulb holder.

B. Diameter, width, depth, and surface finish of seal groove, surface, or other pertinent sealing features.

C. Diameter of the bulb base at the interface of the base and its perpendicular reference surface.

D. Dimensions of features related to retention of the bulb base in the bulb holder such as tabs, keys, keyways, surface, etc.

III. Bulb Holder Interchangeability Dimensions and Tolerances

A. Mating angular locations, diameters, key/keyway sizes, any other interchangeability dimensions for indexing the bulb base in the bulb holder.

B. Mating diameter, width, depth, and surface, or other pertinent sealing features.

C. Mating diameter of the bulb holder at the interface of the bulb base aperture and its perpendicular reference surface.

D. Mating dimensions of features related to retention of the bulb base in the bulb holder such as tabs, keys, keyways, surface, or any other characteristics necessary for mating dimensions.

IV. Electrical Specifications for Each Light Source That Operates With a Ballast and Rated Life of the Light Source/Ballast Combination

A. Maximum power (in watts).

B. Luminous Flux (in lumens).

C. Rated laboratory life of the light source/ballast combination (not less than 2,000 hours).

V. Applicable to Light Sources That Operate With a Source Voltage Other Than 12.8 Volts Direct Current, and When a Proprietary Ballast Must Be Used With the Light Source

A. Manufacturer's part number for the ballast.

B. Any other characteristics necessary for system operation.

VI. Bulb Markings/Designation—ANSI NUMBER, ECE IDENTIFIER, MANUFACTURER'S PART NUMBER, INDIVIDUAL OR IN ANY COMBINATION

VII. All Other Identification, Dimensions or Performance Specifications Necessary for Replaceability or Systems Test Not Listed in Sections I Through VI

Appendix C to Part 564—Information Applicable to Standardized Sealed Beam Headlamp Units

I. Dimensional Information Specific to a Type of Standardized Sealed Beam Unit.

A. Dimensions marked ''I'', indicating interchangeability, for which conformance is mandatory.

B. All other dimensions which are for design purposes.

II. Dimensional Information Applicable to the Use of Nonadjustable Headlamp Aiming Device Locating Plates

III. Dimensional Information Applicable to Mounting Features, Including Mounting Rings and Lamp Bodies, Specific to a Type of Standardized Sealed Beam Unit

A. Dimensions marked ''I'', indicating interchangeability, for which conformance is mandatory.

B. All other dimensions which are for design purposes.

Incorporated Figures [References from 49 CFR 571.108, Oct. 1, 2006]

LF Headlamp Dimensional Information [Figure 11]
UF Headlamp Dimensional Information [Figure 12]
LF/UF Mounting Features [Figure 13]
LF/UF Mounting Ring [Figure 14]
Type G & H Headlamp Dimensional Information [Figure 18]
Type G & H Headlamp Mounting Information [Figure 21]
Type 1A1 Headlamp Dimensional Information [SAE J1383 APR85, Figure 11]
Type 2A1 Headlamp Dimensional Information [SAE J1383 APR85, Figure 10]
Type 2B1 Headlamp Dimensional Information [SAE J1383 APR85, Figure 13]
Type 1C1 Headlamp Dimensional Information [SAE J1383 APR85, Figure 7]
Type 2C1 Headlamp Dimensional Information [SAE J1383 APR85, Figure 8]
Type 2D1 Headlamp Dimensional Information [SAE J1383 APR85, Figure 5]
Type 2E1 Headlamp Dimensional Information [SAE J1383 APR85, Figure 15]
Types 1A1, 2A1, and 2E1 Headlamp Mounting Ring/Lamp Body Dimensional Information [SAE J1383 APR85, Figure 12]
Type 2B1 Headlamp Mounting Ring/Lamp Body Dimensional Information [SAE J1383 APR85, Figure 14]
Types 1C1and 2C1 Headlamp Mounting Ring/Lamp Body Dimensional Information [SAE J1383 APR85, Figure 9]
Type 2D1 Headlamp Mounting Ring/Lamp Body Dimensional Information [SAE J1383 APR85, Figure 6]

PART 571—FEDERAL MOTOR VEHICLE SAFETY STANDARDS

■ 2. The authority citation for Part 571 continues to read as follows:

Authority: 49 U.S.C. 322, 30111, 30115, 30117, 30166; delegation of authority at 49 CFR 1.50.

■ 3. Section 571.108 is amended to read as follows:

§ 571.108 Standard No. 108; Lamps, reflective devices, and associated equipment.

S1 *Scope.* This standard specifies requirements for original and replacement lamps, reflective devices, and associated equipment.

S2 *Purpose.* The purpose of this standard is to reduce traffic accidents and deaths and injuries resulting from traffic accidents, by providing adequate illumination of the roadway, and by enhancing the conspicuity of motor vehicles on the public roads so that their presence is perceived and their signals understood, both in daylight and in darkness or other conditions of reduced visibility.

S3 *Application.* This standard applies to:

S3.1 Passenger cars, multipurpose passenger vehicles, trucks, buses, trailers (except pole trailers and trailer converter dollies), and motorcycles;

S3.2 Retroreflective sheeting and reflex reflectors manufactured to conform to S8.2 of this standard; and

S3.3 Lamps, reflective devices, and associated equipment for replacement of like equipment on vehicles to which this standard applies.

S4 *Definitions.*

Aiming plane means a plane defined by the surface of the three aiming pads on the lens.

Aiming reference plane means a plane which is perpendicular to the longitudinal axis of the vehicle and tangent to the forwardmost aiming pad on the headlamp.

Aiming screws are the horizontal and vertical adjusting screws with self-locking features used to aim and retain a headlamp unit in the proper position.

Axis of reference means the characteristic axis of the lamp for use as the direction of reference (H = 0°, V = 0°) for angles of field for photometric measurements and for installing the lamp on the vehicle.

Backup lamp means a lamp or lamps which illuminate the road to the rear of a vehicle and provide a warning signal to pedestrians and other drivers when the vehicle is backing up or is about to back up.

Beam contributor means an indivisible optical assembly including a lens, reflector, and light source, that is part of an integral beam headlighting system and contributes only a portion of a headlamp beam.

Cargo lamp is a lamp that is mounted on a multipurpose passenger vehicle, truck, or bus for the purpose of providing illumination to load or unload cargo.

Clearance lamps are lamps which show to the front or rear of the vehicle, mounted on the permanent structure of the vehicle as near as practicable to the upper left and right extreme edges to indicate the overall width and height of the vehicle.

Coated materials means a material which has a coating applied to the surface of the finished sample to impart some protective properties. Coating identification means a mark of the manufacturer's name, formulation designation number, and recommendations for application.

Color Fundamental definitions of color are expressed by Chromaticity Coordinates according to the International Commission on Illumination (C.I.E.) 1931 Standard Colorimetric System, as described in the CIE 1931 Chromaticity Diagram (incorporated by reference, see 571.108 S5.2 of this title).

Color bleeding means the migration of color out of a plastic part onto the surrounding surface.

Combination clearance and side marker lamps are single lamps which simultaneously fulfill the requirements of clearance and side marker lamps.

Cracking means a separation of adjacent sections of a plastic material with penetration into the specimen.

Crazing means a network of apparent fine cracks on or beneath the surface of materials.

Cutoff means a generally horizontal, visual/optical aiming cue in the lower beam that marks a separation between areas of higher and lower luminance.

Daytime running lamps (DRLs) are steady burning lamps that are used to improve the conspicuity of a vehicle from the front and front sides when the regular headlamps are not required for driving.

Delamination means a separation of the layers of a material including coatings.

Design voltage means the voltage used for design purposes.

Direct reading indicator means a device that is mounted in its entirety on a headlamp or headlamp aiming or headlamp mounting equipment, is part of a VHAD, and provides information about headlamp aim in an analog or digital format.

Effective light-emitting surface means that portion of a lamp that directs light to the photometric test pattern, and does not include transparent lenses, mounting hole bosses, reflex reflector area, beads or rims that may glow or produce small areas of increased intensity as a result of uncontrolled light from an area of ½° radius around a test point.

Effective projected luminous lens area means the area of the orthogonal projection of the effective light-emitting surface of a lamp on a plane perpendicular to a defined direction relative to the axis of reference. Unless otherwise specified, the direction is coincident with the axis of reference.

Exposed means material used in lenses or optical devices exposed to direct sunlight as installed on the vehicle.

Filament means that part of the light source or light emitting element(s), such as a resistive element, the excited portion of a specific mixture of gases under pressure, or any part of other energy conversion sources, that generates radiant energy which can be seen.

Flash means a cycle of activation and deactivation of a lamp by automatic means continuing until stopped either automatically or manually.

Fully opened means the position of the headlamp concealment device in which the headlamp is in the design open operating position.

H-V axis means the line from the center of the principal filament of a lamp to the intersection of the horizontal (H) and vertical (V) lines of a photometric test screen.

Haze means the cloudy or turbid appearance of an otherwise transparent specimen caused by light scattered from within the specimen or from its surface.

Headlamp means a lighting device providing an upper and/or a lower beam used for providing illumination forward of the vehicle.

Headlamp concealment device means a device, with its operating system and components, that provides concealment of the headlamp when it is not in use, including a movable headlamp cover and a headlamp that displaces for concealment purposes.

Headlamp mechanical axis means the line formed by the intersection of a horizontal and a vertical plane through the light source parallel to the longitudinal axis of the vehicle. If the mechanical axis of the headlamp is not at the geometric center of the lens, then the location will be indicated by the manufacturer on the headlamp.

Headlamp test fixture means a device designed to support a headlamp or headlamp assembly in the test position specified in the laboratory tests and whose mounting hardware and components are those necessary to operate the headlamp as installed in a motor vehicle.

High-mounted stop lamp means a lamp mounted high and possibly forward of the tail, stop, and rear turn signal lamps intended to give a steady stop warning through intervening vehicles to operators of following vehicles.

Identification lamps are lamps used in groups of three, in a horizontal row, which show to the front or rear or both, having lamp centers spaced not less than [6 in] 15.2 mm nor more than [12 in] 30.4 mm apart, mounted on the permanent structure as near as practicable to the vertical centerline and the top of the vehicle to identify certain types of vehicles.

Integral beam headlamp means a headlamp (other than a standardized sealed beam headlamp designed to conform to paragraph S10.13 or a replaceable bulb headlamp designed to conform to paragraph S10.15) comprising an integral and indivisible optical assembly including lens, reflector, and light source, except that a headlamp conforming to paragraph S10.18.8 or paragraph S10.18.9 may have a lens designed to be replaceable.

License plate lamp means a lamp used to illuminate the license plate on the rear of a vehicle.

Lower beam means a beam intended to illuminate the road and its environs ahead of the vehicle when meeting or closely following another vehicle.

Material means the type and grade of plastics, composition, and manufacturer's designation number and color.

Mechanically aimable headlamp means a headlamp having three pads on the lens, forming an aiming plane used for laboratory photometric testing and for adjusting and inspecting the aim of the headlamp when installed on the vehicle.

Motor driven cycle means every motorcycle, including every motor scooter, with a motor which produces not more than 5 horsepower, and every bicycle with motor attached.

Motorcycle or motor driven cycle headlamp means a major lighting device used to produce general illumination ahead of the vehicle.

Mounting ring means the adjustable ring upon which a sealed beam unit is mounted.

Mounting ring (type F sealed beam) means the adjustable ring upon which a sealed beam unit is mounted and which forces the sealed beam unit to seat against the aiming ring when assembled into a sealed beam assembly.

Multiple compartment lamp means a device which gives its indication by two or more separately lighted areas which are joined by one or more common parts, such as a housing or lens.

Multiple lamp arrangement means an array of two or more separate lamps on each side of the vehicle which operate together to give a signal.

Optically combined means a lamp having a single or two filament light source or two or more separate light sources that operate in different ways, and has its optically functional lens area wholly or partially common to two or more lamp functions.

Overall width means the nominal design dimension of the widest part of the vehicle, exclusive of signal lamps, marker lamps, outside rearview mirrors, flexible fender extensions, mud flaps, and outside door handles determined with doors and windows closed, and the wheels in the straight-ahead position. Running boards may also be excluded from the determination of overall width if they do not extend beyond the width as determined by the other items excluded by this definition.

Parking lamps are lamps on both the left and right of the vehicle which show to the front and are intended to mark the vehicle when parked or serve as a reserve front position indicating system in the event of headlamp failure.

Protected means material used in inner lenses for optical devices where such lenses are protected from exposure to the sun by an outer lens made of materials meeting the requirements for exposed plastics.

Rated voltage means the nominal circuit or vehicle electrical system voltage classification.

Reflex reflectors are devices used on vehicles to give an indication to approaching drivers using reflected light from the lamps of the approaching vehicle.

Remote reading indicator means a device that is not mounted in its entirety on a headlamp or headlamp aiming or headlamp mounting equipment, but otherwise meets the definition of a direct reading indicator.

Replaceable bulb headlamp means a headlamp comprising a bonded lens and reflector assembly and one or two replaceable light sources, except that a headlamp conforming to paragraph S10.18.8 or paragraph S10.18.9 may have a lens designed to be replaceable.

Replaceable light source means an assembly of a capsule, base, and terminals that is designed to conform to the requirements of Appendix A or Appendix B of 49 CFR part 564 *Replaceable Light Source Information* of this Chapter.

Retaining ring means the clamping ring that holds a sealed beam unit against a mounting ring.

Retaining ring (type F sealed beam) means the clamping ring that holds a sealed beam unit against a mounting ring, and that provides an interface between the unit's aiming/seating pads and the headlamp aimer adapter (locating plate).

School bus signal lamps are alternately flashing lamps mounted horizontally both front and rear, intended to identify a vehicle as a school bus and to inform other users of the highway that such vehicle is stopped on the highway to take on or discharge school children.

Sealed beam headlamp means an integral and indivisible optical assembly including the light source with ''SEALED BEAM'' molded in the lens.

Sealed beam headlamp assembly means a major lighting assembly which includes one or more sealed beam units used to provide general illumination ahead of the vehicle.

Seasoning means the process of energizing the filament of a headlamp at design voltage for a period of time equal

to 1% of design life, or other equivalent method.

Semiautomatic headlamp beam switching device is one which provides either automatic or manual control of beam switching at the option of the driver. When the control is automatic the headlamps switch from the upper beam to the lower beam when illuminated by the headlamps on an approaching vehicle and switch back to the upper beam when the road ahead is dark. When the control is manual, the driver may obtain either beam manually regardless of the conditions ahead of the vehicle.

Side marker lamps are lamps which show to the side of the vehicle, mounted on the permanent structure of the vehicle as near as practicable to the front and rear edges to indicate the overall length of the vehicle. Additional lamps may also be mounted at intermediate locations on the sides of the vehicle.

Stop lamps are lamps giving a steady light to the rear of a vehicle to indicate a vehicle is stopping or diminishing speed by braking.

Taillamps are steady burning low intensity lamps used to designate the rear of a vehicle.

Test voltage means the specified voltage and tolerance to be used when conducting a test.

Turn signal lamps are the signaling element of a turn signal system which indicates the intention to turn or change direction by giving a flashing light on the side toward which the turn will be made.

Turn signal flasher means a device which causes a turn signal lamp to flash as long as it is turned on.

Turn signal operating unit means an operating unit that is part of a turn signal system by which the operator of a vehicle causes the signal units to function.

Upper beam means a beam intended primarily for distance illumination and for use when not meeting or closely following other vehicles.

Vehicle headlamp aiming device or VHAD means motor vehicle equipment, installed either on a vehicle or headlamp, which is used for determining the horizontal or vertical aim, or both the vertical and horizontal aim of the headlamp.

Vehicular hazard warning signal flasher means a device which, as long as it is turned on, causes all the required turn signal lamps to flash.

Vehicular hazard warning signal operating unit means a driver controlled device which causes all required turn signal lamps to flash simultaneously to indicate to approaching drivers the presence of a vehicular hazard.

Visually/optically aimable headlamp means a headlamp which is designed to be visually/optically aimable in accordance with the requirements of paragraph S10.18.9 of this standard.

S5 *References to SAE publications.*

S5.1 Each required lamp, reflective device, and item of associated equipment must be designed to conform to the requirements of applicable SAE publications as referenced and subreferenced in this standard. The words ''it is recommended that,'' ''recommendations,'' or ''should be'' appearing in any SAE publication referenced or subreferenced in this standard must be read as setting forth mandatory requirements.

S5.2 *Incorporation by reference.* The Director of the Federal Register approves the incorporation by reference of the following material in accordance with 5 U.S.C. 552(a) and 1 CFR Part 51. All material is available for inspection at the NHTSA Reading Room, 1200 New Jersey Avenue, SE., Washington, DC 20590, or at NARA. For information on the availability of this material at NARA, call 202–741–6030, or go to: *http://www.archives.gov/federal_register/code_of_federal_regulations/ibr_locations.html.*

The material is also available at the publisher whose name and address follow the standard number:

1. Society of Automotive Engineers (SAE) Standard J602, revised AUG 1963, ''Headlamp Aiming Device for Mechanically Aimable Sealed Beam Headlamp Units.'' Society of Automotive Engineers, Inc., 400 Commonwealth Drive, Warrendale, PA 15096.

2. Society of Automotive Engineers (SAE) Standard J941b, revised FEB 1969, ''Motor Vehicle Driver's Eye Range.'' Society of Automotive Engineers, Inc., 400 Commonwealth Drive, Warrendale, PA 15096.

3. Society of Automotive Engineers (SAE) Standard J602, revised OCT 1980, ''Headlamp Aiming Device for Mechanically Aimable Sealed Beam Headlamp Units.'' Society of Automotive Engineers, Inc., 400 Commonwealth Drive, Warrendale, PA 15096.

4. Society of Automotive Engineers (SAE) Standard J2009, revised FEB 1993, ''Forward Discharge Lighting Systems.'' Society of Automotive Engineers, Inc., 400 Commonwealth Drive, Warrendale, PA 15096.

5. Society of Automotive Engineers (SAE) Standard J573d, revised DEC 1968, ''Lamp Bulbs and Sealed Units.'' Society of Automotive Engineers, Inc., 400 Commonwealth Drive, Warrendale, PA 15096.

6. Society of Automotive Engineers (SAE) Standard J567b, revised APR 1964, ''Bulb Sockets.'' Society of Automotive Engineers, Inc., 400 Commonwealth Drive, Warrendale, PA 15096.

7. International Commission on Illumination (C.I.E.) 1931 Chromaticity Diagram. CIE Central Bureau, Kegelgasse 27, A–1030 Vienna, Austria.

8. General Services Administration (GSA) Federal Specification L–S–300, approved September 1965, ''Sheeting and Tape, Reflective: Nonexposed Lens, Adhesive Backing.'' Superintendent of Documents, U.S. Government Printing Office, Washington, DC 20402, telephone 202–512–1800.

9. American Society for Testing and Materials (ASTM) D4956–90, published December 1990, ''Standard Specification for Retroreflective Sheeting for Traffic Control.'' ASTM International, 100 Barr Harbor Drive, PO Box C700, Conshohocken, PA 19428–2959.

10. ECE 48 E/ECE/324–E/ECE/TRANS/505, Rev.1/ADD.47/Rev.1/Corr.2, 26 February 1996, ''Uniform Provisions Concerning the Approval of Vehicles with Regard to the Installation of Lighting and Light-Signaling Devices.'' United Nations, Conference Services Division, Distribution and Sales Section, Office C.115–1, Palais des Nations, CH–1211, Geneva 10, *http://www.unece.org/trans/main/wp29/wp29regs.html.*

11. American Society for Testing and Materials (ASTM) D1003–92, published December 1992, ''Standard Test Method for Haze and Luminous Transmittance of Transparent Plastics.'' ASTM International, 100 Barr Harbor Drive, PO Box C700, Conshohocken, PA 19428–2959.

12. American Society for Testing and Materials (ASTM) E308–66, reapproved 1981, ''Standard Practice for Spectrophotometry and Description of Color in CIE 1931 System.'' ASTM International, 100 Barr Harbor Drive, PO Box C700, Conshohocken, PA 19428–2959.

13. American Society for Testing and Materials (ASTM) B117–73, reapproved 1979, ''Standard Method of Salt Spray (Fog) Testing.'' ASTM International, 100 Barr Harbor Drive, PO Box C700, Conshohocken, PA 19428–2959.

14. American Society for Testing and Materials (ASTM) Co. 05.04 1985, ''Annual Book of ASTM Standards: Test Methods for Rating Motor, Diesel, Aviation Fuels,'' Section I, parts A2.3.2, A2.3.3, and A2.7 in Annex 2. ASTM International, 100 Barr Harbor Drive, PO

Box C700, Conshohocken, PA 19428–2959.

15. American Society for Testing and Materials (ASTM) D362–84, published March 1984, ''Standard Specification for Industrial Grade Toluene.'' ASTM International, 100 Barr Harbor Drive, PO Box C700, Conshohocken, PA 19428–2959.

16. American Society for Testing and Materials (ASTM) C150–77, published April 1977, ''Standard Specification for Portland Cement.'' ASTM International, 100 Barr Harbor Drive, PO Box C700, Conshohocken, PA 19428–2959.

17. Illuminating Engineering Society of North America (IES) LM 45, approved April 1980, ''IES Approved Method for Electrical and Photometric Measurements of General Service Incandescent Filament Lamps.'' Illuminating Engineering Society of North America, 345 East 47th St., New York, NY 10017.

S6 *Vehicle requirements.*

S6.1 *Required lamps, reflective devices, and associated equipment by vehicle type.*

S6.1.1 *Quantity.* Except as provided in succeeding paragraphs of this S6.1.1 each vehicle must be equipped with at least the number of lamps, reflective devices, and items of associated equipment specified for that vehicle type and size in Table I and Section 6.6, designed to conform to the requirements of this standard. Multiple license plate lamps and backup lamps may be used to fulfill photometric requirements for those functions.

S6.1.1.1 *Conspicuity systems.* Each trailer of 2032 mm or more in overall width, and with a GVWR over 10,000 lbs., except a trailer designed exclusively for living or office use, and each truck tractor must be equipped with retroreflective sheeting, reflex reflectors, or a combination of retroreflective sheeting and reflex reflectors as specified in S8.2.

S6.1.1.2 *High-mounted stop lamps.* Each multipurpose passenger vehicle, truck, and bus required by this standard to be equipped with a high-mounted stop lamp, whose vertical centerline, when the vehicle is viewed from the rear, is not located on a fixed body panel but separates one or two moveable body sections, such as doors, which lacks sufficient space to install a single high-mounted stop lamp on the centerline above such body sections, must have two high-mounted stop lamps identical in size and shape.

S6.1.1.2.1 The two lamps must be located at the same height, with one vertical edge of each lamp on the vertical edge of the body section nearest the vehicle centerline.

S6.1.1.3 *Truck tractor rear turn signal lamps.* A truck tractor need not be equipped with turn signal lamps mounted on the rear if the turn signal lamps installed at or near the front are of double face construction and are located such that they meet the photometric requirements for double faced turn signal lamps specified in Footnote 6 of Table VII.

S6.1.1.3.1 The flashing signal from a double faced signal lamp must not be obliterated when subjected to external light rays from either in front or behind, at any and all angles.

S6.1.1.4 *Daytime running lamps.* A passenger car, multipurpose passenger vehicle, truck, or bus may be equipped with a pair of daytime running lamps (DRLs) as specified in Table I and S7.10 of this standard. DRLs may be any pair of lamps on the front of the vehicle, whether or not required by this standard, other than parking lamps or fog lamps.

S6.1.2 *Color.* The color in all lamps and reflective devices to which this standard applies must be as specified in Table I. The color identified as amber is identical to the color identified as yellow.

S6.1.3 *Mounting location.*

S6.1.3.1 Each lamp, reflective device, and item of associated equipment must be securely mounted on a rigid part of the vehicle, other than glazing, that is not designed to be removed except for repair, within the mounting location and height limits as specified in Table I, and in a location where it complies with all applicable photometric requirements, effective projected luminous lens area requirements, and visibility requirements with all obstructions considered.

S6.1.3.2 When multiple lamp arrangements or multiple compartment rear turn signal lamps, stop lamps, or taillamps are used, with only a portion of the compartments or lamps installed on a rigid part of the vehicle, that portion must meet at least the photometric requirements for the applicable single compartment lamp.

S6.1.3.3 *License plate lamp.* The license plate lamp or lamps installed on vehicles other than motorcycles and motor driven cycles must be mounted so as to illuminate the license plate without obstruction from any designed feature unless the lamp or lamps is (are) designed to comply with all the photometric requirements with these obstructions considered.

S6.1.3.4 *High-mounted stop lamps.*

S6.1.3.4.1 *Interior mounting.* A high-mounted stop lamp mounted inside the vehicle must have means provided to minimize reflections from the light of the lamp upon the rear window glazing that might be visible to the driver when viewed directly, or indirectly in the rearview mirror.

S6.1.3.4.2 *Accessibility.* Each high-mounted stop lamp must provide access for convenient replacement of bulbs without special tools.

S6.1.3.5 *Headlamp beam mounting.*

S6.1.3.5.1 *Vertical headlamp arrangement.*

S6.1.3.5.1.1 Where multiple headlamps with single light sources are installed in a vertical orientation the lower beam must be provided by the uppermost headlamp.

S6.1.3.5.1.2 Where headlamps with two vertically oriented light sources are installed the lower beam must be provided by the uppermost light source or by all light sources.

S6.1.3.5.1.3 Where more than one lamp must be used for a motorcycle headlighting system, the lamps must be mounted vertically, with the lower beam as high as practicable.

S6.1.3.5.2 *Horizontal headlamp arrangement.*

S6.1.3.5.2.1 Where multiple headlamps with single light sources are installed in a horizontal orientation the lower beam must be provided by the most outboard headlamp.

S6.1.3.5.2.2 Where headlamps with two horizontally oriented light sources are installed the lower beam must be provided by the outboard light source or by all light sources.

S6.1.3.6 *Auxiliary lamps mounted near identification lamps.* Each auxiliary lamp must be located at least twice the distance from any required identification lamp as the distance between two adjacent required identification lamps.

S6.1.4 *Mounting height.* The mounting height of each lamp and reflective device must be measured from the center of the item, as mounted on the vehicle at curb weight, to the road surface.

S6.1.4.1 *High-mounted stop lamps.*

S6.1.4.1.1 A high-mounted stop lamp mounted below the rear window must have no lens portion lower than 153 mm [6 in] below the lower edge of the rear glazing on convertibles, or 77 mm [3 in] on other passenger cars.

S6.1.5 *Activation.* Each lamp must be activated as specified, in the combinations specified, and in response to the inputs specified in Table I and Table II.

S6.1.5.1 *Hazard warning signal.* In all passenger cars, multipurpose passenger vehicles, trucks, and buses, the activation of the vehicular hazard warning signal operating unit must

cause to flash simultaneously sufficient turn signal lamps to meet, as a minimum, the turn signal photometric requirements of this standard.

S6.1.5.2 *Simultaneous beam activation.*

S6.1.5.2.1 On any vehicle to which this standard applies where the headlighting system is designed to conform to the photometric requirements of UB1 of Table XVIII and LB1M or LB1V of Table XIX–a, the lamps marked ''L'' or ''LF'' may remain permanently activated when the lamps marked ''U'' or ''UF'' are activated.

S6.1.5.2.2 On any vehicle to which this standard applies where an integral beam headlighting system is designed to conform to the photometric requirements of UB6 of Table XVIII and LB5M of Table XIX–b or LB4V of Table XIX–c, the lower beam headlamps must remain permanently activated when the upper beam headlamps are activated.

S6.1.5.2.3 On any vehicle to which this section applies where the headlighting system is designed to conform to the photometric requirements of UB2 of Table XVIII and LB2M or LB2V of Table XIX–a, a lower beam light source may remain permanently activated when an upper beam light source is activated if the lower beam light source contributes to the upper beam photometric compliance of the headlighting system.

S6.2 *Impairment.*

S6.2.1 No additional lamp, reflective device, or other motor vehicle equipment is permitted to be installed that impairs the effectiveness of lighting equipment required by this standard.

S6.2.2 If any required lamp or reflective device is obstructed by motor vehicle equipment (e.g., mirrors, snow plows, wrecker booms, backhoes, winches, etc.) including dealer installed equipment, and cannot meet the applicable photometry and visibility requirements, the vehicle must be equipped with an additional lamp or device of the same type which meet all applicable requirements of this standard, including photometry and visibility.

S6.2.3 *Headlamp obstructions.*

S6.2.3.1 When activated in a steady burning state, headlamps must not have any styling ornament or other feature, such as a translucent cover or grill, in front of the lens.

S6.2.3.2 Headlamp wipers may be used in front of the lens provided that the headlamp system is designed to conform with all applicable photometric requirements with the wiper stopped in any position in front of the lens.

S6.3 *Equipment combinations.* Two or more lamps, reflective devices, or items of associated equipment may be combined if the requirements for each lamp, reflective device, and item of associated equipment are met with the following exceptions:

S6.3.1 No high-mounted stop lamp is permitted to be combined with any other lamp or reflective device, other than with a cargo lamp.

S6.3.2 No high-mounted stop lamp is permitted to be optically combined with any cargo lamp.

S6.3.3 No clearance lamp is permitted to be optically combined with any taillamp.

S6.4 *Lens area, visibility and school bus signal lamp aiming.*

S6.4.1 *Effective projected luminous lens area.* Each turn signal lamp, stop lamp, high-mounted stop lamp, and school bus signal lamp must meet the applicable effective projected luminous lens area requirement specified in Tables IV–a, IV–b, and IV–c.

S6.4.2 *Visibility.* Each backup lamp, single or combination of dual high-mounted stop lamp(s), and school bus signal lamp must meet the applicable visibility requirement specified in Table V-a.

S6.4.3 *Visibility options.* A manufacturer must certify compliance of each lamp function to one of the following visibility requirement options, and it may not thereafter choose a different option for that vehicle:

(a) *Lens area option.* When a vehicle is equipped with any lamp listed in Table V-b each such lamp must provide not less than 1250 sq mm of unobstructed effective projected luminous lens area in any direction throughout the pattern defined by the corner points specified in Table V-b for each such lamp; or

(b) *Luminous intensity option.* When a vehicle is equipped with any lamp listed in Table V-c each such lamp must provide a luminous intensity of not less than that specified in Table V-c in any direction throughout the pattern defined by the corner points specified in Table V-c for each such lamp when measured in accordance with the photometry test requirements of this standard.

S6.4.4 *Legacy visibility alternative.* As an alternative to S6.4.3, each passenger car and motorcycle, and each multipurpose passenger vehicle, truck, trailer, and bus that is of less than 2032 mm overall width, that are manufactured on or before September 1, 2011, and each multipurpose passenger vehicle, truck, trailer, and bus that is of 2032 mm or more overall width, that are manufactured on or before September 1, 2014, must have each lamp located so that it meets the visibility requirements specified in Table V-d.

S6.4.5 *School bus signal lamp aiming.* Each school bus signal lamp must be mounted on the vehicle with their aiming plane vertical and normal to the vehicle longitudinal axis. Aim tolerance must be no more than 5 in vertically and 10 in horizontally at 25 ft from the lamp. If the lamps are aimed or inspected by use of the SAE J602, *Headlamp Aiming Device for Mechanically Aimable Sealed Beam Headlamp Units,* (August 1963) (incorporated by reference, see 571.108 S5.2 of this title), the graduation settings for aim must be 2° D and 0° sideways for aiming and the limits must be 3° U to 7° D and from 10° R to 10° L for inspection.

S6.5 *Marking.* A summary of the marking requirements of this standard and their location in the standard is contained in Table III.

S6.5.1 *DOT marking.* The lens of each original equipment and replacement headlamp, and of each original equipment and replacement beam contributor, and each replacement headlamp lens for an integral beam or replaceable bulb headlamp, must be marked with the symbol ''DOT'' either horizontally or vertically to indicate certification under 49 U.S.C. 30115.

S6.5.1.1 The DOT marking requirements for conspicuity materials are specified in S8.2 of this standard.

S6.5.1.2 Each original equipment or replacement lamp or reflective device specified in Table I, except for a headlamp, or an item of associated equipment specified in S9 may be marked with the symbol ''DOT'' which constitutes a certification that it conforms to the requirements of this standard.

S6.5.2 *DRL marking.* Each original equipment and replacement lamp used as a daytime running lamp (DRL), unless optically combined with a headlamp, must be permanently marked ''DRL'' on its lens in letters not less than 3 mm high.

S6.5.3 *Headlamp markings.*

S6.5.3. *Trademark.* The lens of each original and replacement equipment headlamp, and of each original and replacement equipment beam contributor must be marked with the name and/or trademark registered with the U.S. Patent and Trademark Office of the manufacturer of such headlamp or beam contributor, of its importer, or any manufacturer of a vehicle equipped with such headlamp or beam contributor. Nothing in this standard authorizes the marking of any such name and/or trademark by one who is not the owner, unless the owner has consented to it.

S6.5.3.2 *Voltage and trade number.* Each original and replacement equipment headlamp, and each original and replacement equipment beam contributor must be marked with its voltage and with its part or trade number.

S6.5.3.3 *Sealed beam headlamp markings.*

S6.5.3.3.1 Each sealed beam headlamp lens must be molded with ''SEALED BEAM'' and the appropriate designation code as shown in Table II in characters no less than 6.35 mm in size.

S6.5.3.3.2 The face of any character molded on the surface of the lens must not be raised more than 0.5 mm above the lens surface.

S6.5.3.3.3 Type 1C1, 2C1, and 2D1 headlamps must have no raised markings on the outside surface of the lens between the diameters of 40 mm and 90 mm about the lens center.

S6.5.3.3.4 Type 1A1, 2A1, 2B1, and 2E1 headlamps must have no raised markings on the outside surface of the lens within a diameter of 70 mm about the lens center.

S6.5.3.3.5 Type LF, UF, 1G1, 2G1, and 2H1 headlamps must have no raised markings on the outside surface of the lens within a diameter of 35 mm about the lens center.

S6.5.3.3.6 A Type 1C1 replacement headlamp may be marked ''1'' rather than ''1C1''. A Type 2C1 replacement headlamp may be marked ''2'' rather than ''2C1''. A Type 2D1 replacement headlamp may be marked ''TOP'' or ''2'' rather than ''2D1''.

S6.5.3.4 *Replaceable bulb headlamp markings.*

S6.5.3.4.1 The lens of each replaceable bulb headlamp must bear permanent marking in front of each replaceable light source with which it is equipped that states either: The HB Type, if the light source conforms to S11 of this standard for filament light sources, or the bulb marking/designation provided in compliance with Section VIII of Appendix A of 49 CFR Part 564 (if the light source conforms to S11 of this standard for discharge light sources).

S6.5.3.4.1.1 No marking need be provided if the only replaceable light source in the headlamp is type HB1.

S6.5.3.5 *Additional headlamp markings.* Additional marking requirements for headlamps are found in, S10.14.4, S10.15.4, S10.17.2, S10.18.5, S10.18.7, and S10.18.9 of this standard.

S6.6 *Associated equipment.*

S6.6.1 All vehicles to which this standard applies, except trailers, must be equipped with a turn signal operating unit, a turn signal flasher, a turn signal pilot indicator, a headlamp beam switching device, and an upper beam headlamp indicator meeting the requirements of S9.

S6.6.2 All vehicles to which this standard applies except trailers and motorcycles must be equipped with a vehicular hazard warning operating unit, a vehicular hazard warning signal flasher, and a vehicular hazard warning signal pilot indicator meeting the requirements of S9.

S6.6.3 *License plate holder.* Each rear license plate holder must be designed and constructed to provide a substantial plane surface on which to mount the plate. The plane of the license plate mounting surface and the plane on which the vehicle stands must be perpendicular within ± 15°.

S6.7 *Replacement equipment.*

S6.7.1 *General.*

S6.7.1.1 Each replacement lamp, reflective device, or item of associated equipment, including a combination lamp, must:

(a) Be designed to conform to meet all requirements specified in this standard for that type of lamp, reflective device, or other item of equipment (in the case of a combination lamp, it must meet these requirements for each function); and

(b) Include all of the functions of the lamp, reflective device, or item of associated equipment, including a combination lamp, it is designed to replace or is capable of replacing (other than functions not required by this standard).

S6.7.1.2 Each replacement lamp, reflective device, or item of associated equipment, including a combination lamp, which is designed or recommended for particular vehicle models must be designed so that it does not take the vehicle out of compliance with this standard when the individual device is installed on the vehicle. Except as provided in S6.7.1.3, the determination of whether a vehicle would be taken out of compliance with this standard when an individual device is installed on the vehicle is made without regard to whether additional devices, including separate lamps or reflective devices sold together with the device, would also be installed.

S6.7.1.3 In the case of a lamp or other device that is used on each side of the vehicle in pairs, the determination (for the purposes of S6.7.1.2) of whether a vehicle would be taken out of compliance with this standard when an individual device is installed on the vehicle is made assuming that the other matched paired device would be installed on the other side of the vehicle, whether or not the matched paired devices are sold together. This provision does not limit the responsibilities of manufacturers, distributors, dealers or motor vehicle repair businesses under 49 U.S.C. 30122, *Making safety devices and elements inoperative.*

S6.7.2 *Version of this standard.* The requirements of S6.7.1 must be met, at the option of the manufacturer, using either the current version of this standard or the standard in effect at the time of manufacture of the original equipment being replaced.

S7 *Signal lamp requirements.*

S7.1 *Turn signal lamps.*

S7.1.1 *Front turn signal lamps.*

S7.1.1.1 *Number.* See Tables I–a and I–c.

S7.1.1.2 *Color of light.* See Tables I–a and I–c.

S7.1.1.3 *Mounting location.* See Tables I–a and I–c.

S7.1.1.4 *Mounting height.* See Tables I–a and I–c.

S7.1.1.5 *Activation.* See Tables I–a and I–c.

S7.1.1.6 *Effective projected luminous lens area.* See Table IV–a.

S7.1.1.7 *Visibility.* See S6.4.

S7.1.1.8 *Indicator.* See S9.3.

S7.1.1.9 *Markings.* See S6.5.

S7.1.1.10 *Spacing to other lamps.*

S7.1.1.10.1 Each front turn signal lamp must also be designed to comply with any additional photometry requirements based on its installed spacing to other lamps as specified by this section. Where more than one spacing relationship exists for a turn signal lamp the requirement must be the one that specifies the highest luminous intensity multiplier of Tables VI–a and VI–b.

S7.1.1.10.2 *Spacing measurement for non-reflector lamps.* For any front turn signal lamp that does not employ a reflector to meet photometric requirements, the spacing must be measured from the light source of the turn signal lamp to the lighted edge of any lower beam headlamp, or any lamp such as an auxiliary lower beam headlamp or fog lamp used to supplement the lower beam headlamp.

S7.1.1.10.3 *Spacing measurement for lamps with reflectors.* For any front turn signal lamp which employs a reflector, such as a parabolic reflector, to meet photometric requirements, the spacing must be measured from the geometric centroid of the turn signal lamp effective projected luminous lens area to the lighted edge of any lower beam headlamp, or any lamp such as an auxiliary lower beam headlamp or fog lamp used to supplement the lower beam headlamp.

S7.1.1.10.4 *Spacing based photometric multipliers.*

(a) where the spacing measurement of S7.1.1.10.2 or S7.1.1.10.3 between a turn signal lamp and the lighted edge of any lower beam headlamp is less than 100 mm the photometric multiplier must be 2.5.

(b) where the spacing measurement of S7.1.1.10.2 or S7.1.1.10.3 between a turn signal lamp and the lighted edge of any lamp such as an auxiliary lower beam headlamp or fog lamp used to supplement the lower beam headlamp is at least 75 mm but less than 100 mm the photometric multiplier of Table VI must be 1.5.

(c) where the spacing measurement of S7.1.1.10.2 or S7.1.1.10.3 between a turn signal lamp and the lighted edge of any lamp such as an auxiliary lower beam headlamp or fog lamp used to supplement the lower beam headlamp is at least 60 mm but less than 75 mm the photometric multiplier must be 2.0.

(d) where the spacing measurement of S7.1.1.10.2 or S7.1.1.10.3 between a turn signal lamp and the lighted edge of any lamp such as an auxiliary lower beam headlamp or fog lamp used to supplement the lower beam headlamp is less than 60 mm the photometric multiplier must be 2.5.

S7.1.1.11 *Multiple compartments and multiple lamps.*

S7.1.1.11.1 A multiple compartment lamp or multiple lamps may be used to meet the photometric requirements of a front turn signal lamp.

S7.1.1.11.2 If a multiple compartment lamp or multiple lamps are used on a passenger car or on a multipurpose passenger vehicle, truck, bus, or trailer of less than 2032 mm in overall width, and the distance between adjacent light sources does not exceed 560 mm for two compartment or lamp arrangements and does not exceed 410 mm for three compartments or lamp arrangements, then the combination of the compartments or lamps must be used to meet the photometric requirements for the corresponding number of lighted sections specified in Tables VI–a or VI–b.

S7.1.1.11.3 If the distance between adjacent light sources exceeds the previously stated dimensions, each compartment or lamp must comply with the photometric requirements for one lighted section specified in Tables VI–a or VI–b

S7.1.1.11.4 *Lamps installed on vehicles 2032 mm or more in overall width.* Multiple compartment front turn signal lamps installed on multipurpose passenger vehicles, trucks, and buses 2032 mm or more in overall width require measurement of the photometrics for the entire lamp and not for individual compartments.

S7.1.1.12 *Ratio to parking lamps and clearance lamps.*

S7.1.1.12.1 When a parking lamp, or a clearance lamp on a multipurpose passenger vehicle, truck, trailer, or bus of 2032 mm or more in overall width, is combined with a front turn signal lamp, the luminous intensity of the front turn signal lamp at each identified test point must not be less than the luminous intensity of the parking lamp or clearance lamp at that same test point times the multiplier shown for that test point in Tables VI-a or VI-b.

S7.1.1.12.2 If a multiple compartment or multiple lamp arrangement is used on a passenger car or on a multipurpose passenger vehicle, truck, bus, or trailer of less than 2032 mm in overall width, and the distance between the optical axes for both the parking lamp and turn signal lamp is within 560 mm for two compartment or lamp arrangements or 410 mm for three compartment or lamp arrangements, then the ratio must be computed with all compartments or lamps lighted.

S7.1.1.12.3 If a multiple compartment or multiple lamp arrangement is used and the distance between optical axes for one of the functions exceeds 560 mm for two compartment or lamp arrangements or 410 mm for three compartments or lamp arrangements, then the ratio must be computed for only those compartments or lamps where the parking lamp and turn signal lamp are optically combined.

S7.1.1.12.4 Where the clearance lamp is combined with the turn signal lamp, and the maximum luminous intensity of the clearance lamp is located below horizontal and within an area generated by a 1.0 radius around a test point, the ratio for the test point may be computed using the lowest value of the clearance lamp luminous intensity within the generated area.

S7.1.1.13 *Photometry.*

S7.1.1.13.1 When tested according to the procedure of S14.2.1, each front turn signal lamp must be designed to conform to the base photometry requirements plus any applicable multipliers as shown in Tables VI–a and VI–b for the number of lamp compartments or individual lamps and the type of vehicle it is installed on.

S7.1.1.13.2 As an alternative to S7.1.1.13.1, a front turn signal lamp installed on a motorcycle may be designed to conform to the photometry requirements of Table XIII-a when tested according to the procedure of S14.2.1.

S7.1.1.14 *Physical tests.* Each front turn signal lamp must be designed to conform to the performance requirements of the vibration test, moisture test, dust test, and corrosion test of S14.5, and the color test and plastic optical material test of S14.4.

S7.1.2 *Rear turn signal lamps.*

S7.1.2.1 *Number.* See Tables I–a, I–b, and I–c.

S7.1.2.2 *Color of light.* See Tables I–a, I–b, and I–c.

S7.1.2.3 *Mounting location.* See Tables I–a, I–b, and I–c and S6.1.3.2.

S7.1.2.4 *Mounting height.* See Tables I–a, I–b, and I–c.

S7.1.2.5 *Activation.* See Tables I–a, I–b, and I–c.

S7.1.2.6 *Effective projected luminous lens area.* See Table IV–a.

S7.1.2.7 *Visibility.* See S6.4.

S7.1.2.8 *Indicator.* See S9.3.

S7.1.2.9 *Markings.* See S6.5.

S7.1.2.10 *Spacing to other lamps.* No requirement.

S7.1.2.11 *Multiple compartments and multiple lamps.*

S7.1.2.11.1 A multiple compartment lamp or multiple lamps may be used to meet the photometric requirements of a rear turn signal lamp provided the requirements of S6.1.3.2 are met

S7.1.2.11.2 If a multiple compartment lamp or multiple lamps are used on a passenger car or on a multipurpose passenger vehicle, truck, bus, or trailer of less than 2032 mm in overall width, and the distance between adjacent light sources does not exceed 560 mm for two compartment or lamp arrangements and does not exceed 410 mm for three compartment or lamp arrangements, then the combination of the compartments or lamps must be used to meet the photometric requirements for the corresponding number of lighted sections specified in Table VII.

S7.1.2.11.3 If the distance between adjacent light sources exceeds the previously stated dimensions, each compartment or lamp must comply with the photometric requirements for one lighted section specified in Table VII.

S7.1.2.11.4 *Lamps installed on vehicles 2032 mm or more in overall width.* Multiple compartment rear turn signal lamps installed on multipurpose passenger vehicles, trucks, and buses 2032 mm or more in overall width require measurement of the photometrics for the entire lamp and not for individual compartments.

S7.1.2.12 *Ratio to taillamps and clearance lamps.*

S7.1.2.12.1 When a taillamp, or a clearance lamp on a multipurpose passenger vehicle, truck, trailer, or bus of 2032 mm or more in overall width, is combined with a rear turn signal lamp, the luminous intensity of the rear turn signal lamp at each identified test point must not be less than the

luminous intensity of the taillamp or clearance lamp at that same test point times the multiplier shown for that test point in Table VII.

S7.1.2.12.2 If a multiple compartment or multiple lamp arrangement is used on a passenger car or on a multipurpose passenger vehicle, truck, bus, or trailer of less than 2032 mm in overall width, and the distance between the optical axes for both the taillamp and turn signal lamp is within 560 mm for two compartment or lamp arrangement or 410 mm for three compartments or lamp arrangements, then the ratio must be computed with all compartments or lamps lighted.

S7.1.2.12.3 If a multiple compartment or multiple lamp arrangement is used and the distance between optical axes for one of the functions exceeds 560 mm for two compartment or lamp arrangements or 410 mm for three compartment or lamp arrangements, then the ratio must be computed for only those compartments or lamps where the taillamp and turn signal lamp are optically combined.

S7.1.2.12.4 Where the taillamp or clearance lamp is combined with the turn signal lamp, and the maximum luminous intensity of the taillamp or clearance lamp is located below horizontal and within an area generated by a 0.5° radius around a test point for a taillamp on a passenger car or on a multipurpose passenger vehicle, truck, bus, or trailer of less than 2032 mm in overall width, or by a 1.0° radius around a test point for a taillamp or clearance lamp on a vehicle 2032 mm or more in overall width, the ratio for the test point may be computed using the lowest value of the taillamp or clearance lamp luminous intensity within the generated area.

S7.1.2.13 *Photometry.*

S7.1.2.13.1 Each rear turn signal lamp must be designed to conform to the photometry requirements of Table VII, when tested according to the procedure of S14.2.1, for the number of lamp compartments or individual lamps, the type of vehicle it is installed on, and the lamp color as specified by this section.

S7.1.2.13.2 As an alternative to S7.1.2.13.1, a rear turn signal lamp installed on a motorcycle may be designed to conform to the photometry requirements of Table XIII-a when tested according to the procedure of S14.2.1.

S7.1.2.14 *Physical tests.* Each rear turn signal lamp must be designed to conform to the performance requirements of the vibration test, moisture test, dust test, and corrosion test of S14.5, and the color test and plastic optical material test of S14.4.

S7.1.3 *Combined lamp bulb indexing.*

S7.1.3.1 Each turn signal lamp optically combined with a taillamp or a parking lamp, or clearance lamp where installed on a vehicle 2032 mm or more in overall width, where a two-filament bulb is used must have a bulb with an indexing base and a socket designed so that bulbs with non-indexing bases cannot be used.

S7.1.3.2 Removable sockets must have an indexing feature so that they cannot be re-inserted into lamp housings in random positions, unless the lamp will perform its intended function with random light source orientation.

S7.2 *Taillamps.*

S7.2.1 *Number.* See Tables I-a, I-b, and I-c.

S7.2.2 *Color of light.* See Tables I-a, I-b, and I-c.

S7.2.3 *Mounting location.* See Tables I-a, I-b, and I-c and S6.1.3.2.

S7.2.4 *Mounting height.* See Tables I-a, I-b, and I-c.

S7.2.5 *Activation.* See Tables I-a, I-b, and I-c.

S7.2.6 *Effective projected luminous lens area.* No requirement.

S7.2.7 *Visibility.* See S6.4.

S7.2.8 *Indicator.* No requirement.

S7.2.9 *Markings.* See S6.5.

S7.2.10 *Spacing to other lamps.* No requirement.

S7.2.11 *Multiple compartments and multiple lamps.*

S7.2.11.1 A multiple compartment lamp or multiple lamps may be used to meet the photometric requirements of a taillamp provided the requirements of S6.1.3.2 are met.

S7.2.11.2 If a multiple compartment lamp or multiple lamps are used and the distance between the optical axes does not exceed 560 mm for two compartment or lamp arrangements and does not exceed 410 mm for three compartment or lamp arrangements, then the combination of the compartments or lamps must be used to meet the photometric requirements for the corresponding number of lighted sections specified in Table VIII.

S7.2.11.3 If the distance between optical axes exceeds the previously stated dimensions, each compartment or lamp must comply with the photometric requirements for one lighted section specified in Table VIII.

S7.2.11.4 *Taillamps installed on vehicles 2032 mm or more in overall width.* A maximum of two taillamps and/or two compartments per side may be mounted closer together than 560 mm providing that each compartment and/or lamp meets the single lighted section photometric requirements specified in Table VIII. Each lamp and/or compartment utilized in this manner must meet the single lighted section requirements for all functions for which it is designed.

S7.2.12 *Ratio.* See S7.1.2.12 for rear turn signal lamps and S7.3.12 for stop lamps.

S7.2.13 *Photometry.* Each taillamp must be designed to conform to the photometry requirements of Table VIII, when tested according to the procedure of S14.2.1, for the number of lamp compartments or individual lamps and the type of vehicle it is installed on.

S7.2.14 *Physical tests.* Each taillamp must be designed to conform to the performance requirements of the vibration test, moisture test, dust test, and corrosion test of S14.5, and the color test and plastic optical material test of S14.4.

S7.3 *Stop lamps.*

S7.3.1 *Number.* See Tables I-a, I-b, and I-c.

S7.3.2 *Color of light.* See Tables I-a, I-b, and I-c.

S7.3.3 *Mounting location.* See Tables I-a, I-b, and I-c and S6.1.3.2.

S7.3.4 *Mounting height.* See Tables I-a, I-b, and I-c.

S7.3.5 *Activation.* See Tables I-a, I-b, and I-c.

S7.3.6 *Effective projected luminous lens area.* See Table IV-a.

S7.3.7 *Visibility.* See S6.4.

S7.3.8 *Indicator.* No requirement.

S7.3.9 *Markings.* See S6.5.

S7.3.10 *Spacing to other lamps.* No requirement.

S7.3.11 *Multiple compartments and multiple lamps.*

S7.3.11.1 A multiple compartment lamp or multiple lamps may be used to meet the photometric requirements of a stop lamp provided the requirements of S6.1.3.2 are met.

S7.3.11.2 If a multiple compartment lamp or multiple lamps are used on a passenger car or on a multipurpose passenger vehicle, truck, bus, or trailer of less than 2032 mm in overall width, and the distance between adjacent light sources does not exceed 560 mm for two compartment or lamp arrangements and does not exceed 410 mm for three compartment or lamp arrangements, then the combination of the compartments or lamps must be used to meet the photometric requirements for the corresponding number of lighted sections specified in Table IX.

S7.3.11.3 If the distance between adjacent light sources exceeds the previously stated dimensions, each compartment or lamp must comply with the photometric requirements for one lighted section specified in Table IX.

S7.3.11.4 *Lamps installed on vehicles 2032 mm or more in overall width.* Multiple compartment stop lamps installed on multipurpose passenger vehicles, trucks, and buses 2032 mm or more in overall width require measurement of the photometrics for the entire lamp and not for individual compartments.

S7.3.12 *Ratio to taillamps.*

S7.3.12.1 When a taillamp is combined with a stop lamp, the luminous intensity of the stop lamp at each identified test point must not be less than the luminous intensity of the taillamp at that same test point times the multiplier shown for that test point in Table IX.

S7.3.12.2 If a multiple compartment or multiple lamp arrangement is used on a passenger car or on a multipurpose passenger vehicle, truck, bus, or trailer of less than 2032 mm in overall width, and the distance between the optical axes for both the taillamp and stop lamp is within 560 mm for two compartment or lamp arrangements or 410 mm for three compartment or lamp arrangements, then the ratio must be computed with all compartments or lamps lighted.

S7.3.12.3 If a multiple compartment or multiple lamp arrangement is used and the distance between optical axes for one of the functions exceeds 560 mm for two compartment or lamp arrangements or 410 mm for three compartments or lamp arrangements, then the ratio must be computed for only those compartments or lamps where the taillamp and stop lamp are optically combined.

S7.3.12.4 Where the taillamp is combined with the stop lamp, and the maximum luminous intensity of the taillamp is located below horizontal and within an area generated by a 0.5° radius around a test point for a taillamp on a passenger car or on a multipurpose passenger vehicle, truck, bus, or trailer of less than 2032 mm in overall width, or by a 1.0° radius around a test point for a taillamp on a vehicle 2032 mm or more in overall width, the ratio for the test point may be computed using the lowest value of the taillamp luminous intensity within the generated area.

S7.3.13 *Photometry.*

S7.3.13.1 Each stop lamp must be designed to conform to the photometry requirements of Table IX, when tested according to the procedure of S14.2.1, for the number of lamp compartments or individual lamps and the type of vehicle it is installed on.

S7.3.13.2 A stop lamp installed on a motor driven cycle may be designed to conform to the photometry requirements of Table XIII-b when tested according to the procedure of S14.2.1.

S7.3.14 *Physical tests.* Each stop lamp must be designed to conform to the performance requirements of the vibration test, moisture test, dust test, and corrosion test of S14.5, and the color test and plastic optical material test of S14.4.

S7.3.15 *Combined lamp bulb indexing.*

S7.3.15.1 Each stop lamp optically combined with a taillamp where a two-filament bulb is used must have a bulb with an indexing base and a socket designed so that bulbs with non-indexing bases cannot be used.

S7.3.15.2 Removable sockets must have an indexing feature so that they cannot be re-inserted into lamp housings in random positions, unless the lamp will perform its intended function with random light source orientation.

S7.4 *Side marker lamps.*

S7.4.1 *Number.* See Tables I–a, I–b, and I–c.

S7.4.2 *Color of light.* See Tables I–a, I–b, and I–c.

S7.4.3 *Mounting location.* See Tables I–a, I–b, and I–c.

S7.4.4 *Mounting height.* See Tables I–a, I–b, and I–c.

S7.4.5 *Activation.* See Tables I–a, I–b, and I–c.

S7.4.6 *Effective projected luminous lens area.* No requirement.

S7.4.7 *Visibility.* No requirement.

S7.4.8 *Indicator.* No requirement.

S7.4.9 *Markings.* See S6.5.

S7.4.10 *Spacing to other lamps.* No requirement.

S7.4.11 *Multiple compartments and multiple lamps.* No requirement.

S7.4.12 *Ratio.* No requirement.

S7.4.13 *Photometry.*

S7.4.13.1 Each side marker lamp must be designed to conform to the photometry requirements of Table X, when tested according to the procedure of S14.2.1, for the lamp color as specified by this section.

S7.4.13.2 *Inboard photometry.* For each motor vehicle less than 30 feet in overall length and less than 2032 mm in overall width, the minimum photometric intensity requirements for a side marker lamp may be met for all inboard test points at a distance of 15 feet from the vehicle and on a vertical plane that is perpendicular to the longitudinal axis of the vehicle and located midway between the front and rear side marker lamps.

S7.4.14 *Physical tests.* Each side marker lamp must be designed to conform to the performance requirements of the vibration test, moisture test, dust test, and corrosion test of S14.5, and the color test and plastic optical material test of S14.4.

S7.5 *Clearance and identification lamps.*

S7.5.1 *Number.* See Tables I–a and I–b.

S7.5.2 *Color of light.* See Tables I–a and I–b.

S7.5.3 *Mounting location.* See Tables I–a and I–b.

S7.5.4 *Mounting height.* See Tables I–a and I–b.

S7.5.5 *Activation.* See Tables I–a and I–b.

S7.5.6 *Effective projected luminous lens area.* No requirement.

S7.5.7 *Visibility.* No requirement.

S7.5.8 *Indicator.* No requirement.

S7.5.9 *Markings.* See S6.5.

S7.5.10 *Spacing to other lamps.* No requirement.

S7.5.11 *Multiple compartments and multiple lamps.* No requirement.

S7.5.12 *Ratio.*

S7.5.12.1 *Clearance lamps.* See S7.1.1.12 for front turn signal lamps and S7.1.2.12 for rear turn signal lamps.

S7.5.12.2 *Identification lamps.* No requirement.

S7.5.13 *Photometry.* Each clearance or identification lamp must be designed to conform to the photometry requirements of Table XI, for the applicable lamp color, when tested according to the procedure of S14.2.1.

S7.5.14 *Physical tests.* Each clearance and identification must be designed to conform to the performance requirements of the vibration test, moisture test, dust test, and corrosion test of S14.5, and the color test and plastic optical material test of S14.4.

S7.6 *Backup lamps.*

S7.6.1 *Number.* See Table I–a and S6.1.1.

S7.6.2 *Color of light.*

S7.6.2.1 See Table I–a.

S7.6.2.2 A backup lamp may project incidental red, yellow, or white light through reflectors or lenses that are adjacent, close to, or a part of the lamp assembly.

S7.6.3 *Mounting location.* See Table I–a.

S7.6.4 *Mounting height.* No requirement.

S7.6.5 *Activation.* See Table I–a.

S7.6.6 *Effective projected luminous lens area.* No requirement.

S7.6.7 *Visibility.* See Table V–a.

S7.6.8 *Indicator.* No requirement.

S7.6.9 *Markings.* See S6.5.

S7.6.10 *Spacing to other lamps.* No requirement.

S7.6.11 *Multiple compartments and multiple lamps.* No requirement.

S7.6.12 *Ratio.* No requirement.

S7.6.13 *Photometry.* Each backup lamp must be designed to conform to

the photometry requirements of Table XII, when tested according to the procedure of S14.2.1, as specified by this section.

S7.6.14 *Physical tests.* Each backup lamp must be designed to conform to the performance requirements of the vibration test, moisture test, dust test, and corrosion test of S14.5, and the color test and plastic optical material test of S14.4.

S7.7 *License plate lamps.*

S7.7.1 *Number.* See Tables I–a, I–b, and I–c and S6.1.1.

S7.7.2 *Color of light.* See Tables I–a, I–b, and I–c.

S7.7.3 *Mounting location.* See Tables I–a, I–b, and I–c.

S7.7.4 *Mounting height.* See Tables I–a, I–b, and I–c.

S7.7.5 *Activation.* See Tables I–a, I–b, and I–c.

S7.7.6 *Effective projected luminous lens area.* No requirement.

S7.7.7 *Visibility.* No requirement.

S7.7.8 *Indicator.* No requirement.

S7.7.9 *Markings.* See S6.5.

S7.7.10 *Spacing to other lamps.* No requirement.

S7.7.11 *Multiple compartments and multiple lamps.* No requirement.

S7.7.12 *Ratio.* No requirement.

S7.7.13 *Photometry.*

S7.7.13.1 Each license plate lamp must be designed to conform to the photometry requirements of this section when tested according to the procedure of S14.2.2.

S7.7.13.2 An illumination value of no less than 8 lx [0.75 fc] must be met at each test station target location shown in Figure 19.

S7.7.13.3 The ratio of the average of the two highest illumination values divided by the average of the two lowest illumination values must not exceed 20:1 for vehicles other than motorcycles and motor driven cycles.

S7.7.13.4 The ratio of the highest illumination value divided by the average of the two lowest illumination values must not exceed 15:1 for motorcycles and motor driven cycles.

S7.7.14 *Physical tests.* Each license plate lamp must be designed to conform to the performance requirements of the vibration test, moisture test, dust test, and corrosion test of S14.5, and the color test and plastic optical material test of S14.4.

S7.7.15 *Installation.*

S7.7.15.1 Each license plate lamp installed on a vehicle other than a motorcycle or motor driven cycle must be of such size and design as to provide illumination on all parts of a 150 mm by 300 mm test plate.

S7.7.15.2 Each license plate lamp installed on a motorcycle or motor driven cycle must be of such size and design as to provide illumination on all parts of a 100 mm by 175 mm test plate.

S7.7.15.3 The light rays must reach all portions of an imaginary plate of the same size at least 25 mm ahead of the actual plate measured perpendicular to the plane of the plate.

S7.7.15.4 *Incident light from single lamp.* When a single lamp as shown in Figure 20 is used to illuminate the license plate, the lamp and license plate holder must bear such relation to each other that at no point on the plate must the incident light make an angle of less than 8° to the plane of the plate, this angle being measured from the edge of the light emitting surface of the lamp farthest from the surface of the plate.

S7.7.15.5 *Incident light from multiple lamps.* When two or more lamps as shown in Figure 20 are used to illuminate the license plate, the minimum 8° incident light angle must apply only to that portion of the plate which the particular lamp is designed to illuminate. The angle must be measured in the same manner as S7.7.15.4.

S7.8 *Parking lamps.*

S7.8.1 *Number.* See Table I–a.

S7.8.2 *Color of light.* See Table I–a.

S7.8.3 *Mounting location.* See Table I–a.

S7.8.4 *Mounting height.* See Table I–a.

S7.8.5 *Activation.* See Table I–a.

S7.8.6 *Effective projected luminous lens area.* No requirement.

S7.8.7 *Visibility.* See S6.4.

S7.8.8 *Indicator.* No requirement.

S7.8.9 *Markings.* See S6.5.

S7.8.10 *Spacing to other lamps.* No requirement.

S7.8.11 *Multiple compartments and multiple lamps.* No requirement.

S7.8.12 *Ratio.* See S7.1.1.12 for front turn signal lamps.

S7.8.13 *Photometry.* Each parking lamp must be designed to conform to the photometry requirements of Table XIV, when tested according to the procedure of S14.2.1, as specified by this section.

S7.8.14 *Physical tests.* Each parking lamp must be designed to conform to the performance requirements of the vibration test, moisture test, dust test, and corrosion test of S14.5, and the color test and plastic optical material test of S14.4.

S7.9 *High-mounted stop lamps.*

S7.9.1 *Number.* See Table I–a and S6.1.1.2.

S7.9.2 *Color of light.* See Table I–a.

S7.9.3 *Mounting location.* See Table I–a.

S7.9.4 *Mounting height.* See Table I–a and S6.1.4.1.

S7.9.5 *Activation.* See Table I–a.

S7.9.6 *Effective projected luminous lens area.* See Table IV–b.

S7.9.7 *Visibility.* See Table V–a.

S7.9.8 *Indicator.* No requirement.

S7.9.9 *Markings.* See S6.5

S7.9.10 *Spacing to other lamps.* No requirement.

S7.9.11 *Multiple compartments and multiple lamps.* No requirement.

S7.9.12 *Ratio.* No requirement.

S7.9.13 *Photometry.* Each high-mounted stop lamp must be designed to conform to the photometry requirements of Table XV, when tested according to the procedure of S14.2.1, as specified by this section.

S7.9.14 *Physical tests.*

S7.9.14.1.1 Each high-mounted stop lamp must be designed to conform to the performance requirements of the vibration test of S14.5, and the color test and plastic optical material test of S14.4.

S7.9.14.1.2 Each high-mounted stop lamp that is not mounted inside the vehicle must be designed to conform to the performance requirements of the moisture test, dust test, and corrosion test of S14.5.

S7.10 *Daytime running lamps (DRLs).*

S7.10.1 *Number.* See Table I–a.

S7.10.2 *Color of light.* See Table I–a.

S7.10.3 *Mounting location.* See Table I–a.

S7.10.4 *Mounting height.* See Table I–a. and S7.10.13(b).

S7.10.5 *Activation.* See Table I–a. and S7.10.10.1(c).

S7.10.6 *Effective projected luminous lens area.* No requirement.

S7.10.7 *Visibility.* No requirement.

S7.10.8 *Indicator.* No requirement.

S7.10.9 *Markings.* See S6.5.

S7.10.10 *Spacing to other lamps.*

S7.10.10.1 *Spacing to turn signal lamps.* Each DRL not optically combined with a turn signal lamp must be located on the vehicle so that the distance from its lighted edge to the optical center of the nearest turn signal lamp is not less than 100 mm unless,

(a) The luminous intensity of the DRL is not more than 2,600 cd at any location in the beam and the turn signal lamp meets 2.5 times the base front turn signal photometric requirements, or

(b) The DRL is optically combined with a lower beam headlamp and the turn signal lamp meets 2.5 times the base front turn signal photometric requirements, or

(c) The DRL is deactivated when the turn signal or hazard warning signal lamp is activated.

S7.10.11 *Multiple compartments and multiple lamps.* No requirement.

S7.10.12 *Ratio.* No requirement.

S7.10.13 *Photometry.* Each DRL must have a luminous intensity not less

than 500 cd at test point H–V, nor more than 3,000 cd at any location in the beam when tested according to the procedure of S14.2.4 as specified by this section, unless it is:

(a) A lower beam headlamp intended to operate as a DRL at full voltage, or a voltage lower than used to operate it as a lower beam headlamp, or

(b) An upper beam headlamp intended to operate as a DRL, whose luminous intensity at test point H–V is not more than 7,000 cd, and whose mounting height is not higher than 864 mm.

S7.10.14 *Physical tests.* Each DRL that is not combined with another required lamp must be designed to conform to the performance requirements of the color test and plastic optical material test of S14.4.

S7.11 *School bus signal lamps.*

S7.11.1 *Number.* See Table I–a.

S7.11.2 *Color of light.* See Table I–a.

S7.11.3 *Mounting location.* See Table I–a.

S7.11.4 *Mounting height.* See Table I–a.

S7.11.5 *Activation.* See Table I–a.

S7.11.6 *Effective projected luminous lens area.* See Table IV–c.

S7.11.7 *Visibility.* See Table V–a.

S7.11.8 *Indicator.* No requirement.

S7.11.9 *Markings.* See S6.5.

S7.11.10 *Spacing to other lamps.* No requirement.

S7.11.11 *Multiple compartments and multiple lamps.* No requirement.

S7.11.12 *Ratio.* No requirement.

S7.11.13 *Photometry.* Each school bus signal lamp must be designed to conform to the photometry requirements of Table XVII, when tested according to the procedure of S14.2.1, for the lamp color as specified by this section.

S7.11.14 *Physical tests.* Each school bus signal lamp must be designed to conform to the performance requirements of the vibration test, moisture test, dust test, and corrosion test of S14.5, and the color test and plastic optical material test of S14.4.

S8 *Reflective device requirements.*

S8.1 *Reflex reflectors.*

S8.1.1 *Number.* See Tables I–a, I–b, and I–c.

S8.1.2 *Color.* See Tables I–a, I–b, and I–c.

S8.1.3 *Mounting location.* See Tables I–a, I–b, and I–c.

S8.1.4 *Mounting height.* See Tables I–a, I–b, and I–c.

S8.1.5 *Activation.* No requirement.

S8.1.6 *Effective projected luminous lens area.* No requirement.

S8.1.7 *Visibility.* No requirement.

S8.1.8 *Indicator.* No requirement.

S8.1.9 *Markings.* See S6.5.

S8.1.10 *Spacing to other lamps or reflective devices.* No requirement.

S8.1.11 *Photometry.* Each reflex reflector must be designed to conform to the photometry requirements of Table XVI–a when tested according to the procedure of S14.2.3 for the reflex reflector color as specified by this section.

S8.1.12 *Physical tests.* Each reflex reflector must be designed to conform to the performance requirements of the vibration test, moisture test, dust test, and corrosion test of S14.5, and the color test and plastic optical material test of S14.4.

S8.1.13 *Alternative side reflex reflector material.* Reflective material conforming to Federal Specification L–S–300, Sheeting and Tape, Reflective; Non-exposed Lens, Adhesive Backing, (September 7, 1965) (incorporated by reference, see 571.108 S5.2 of this title), may be used for side reflex reflectors if this material as used on the vehicle, meets the performance requirements of Table XVI–a.

S8.2 *Conspicuity systems.* The requirement for conspicuity systems may be met with retroreflective sheeting, conspicuity reflex reflectors, or a combination of retroreflective sheeting and conspicuity reflex reflectors.

S8.2.1 *Retroreflective sheeting.*

S8.2.1.1 Retroreflective sheeting must consist of a smooth, flat, transparent exterior film with retroreflective elements embedded or suspended beneath the film so as to form a non-exposed retroreflective optical system.

S8.2.1.2 *Retroreflective sheeting material.* Retroreflective sheeting must meet the requirements, except photometry, of ASTM D 4956–90, Standard for Retroreflective Sheeting for Traffic Control, (incorporated by reference, see 571.108 S5.2 of this title) for Type V Sheeting. Sheeting of Grade DOT–C2 of no less than 50 mm wide, Grade DOT–C3 of no less than 75 mm wide, or Grade DOT–C4 of no less than 100 mm wide may be used.

S8.2.1.3 *Certification marking.* The letters DOT–C2, DOT–C3, or DOT–C4, as appropriate, constituting a certification that the retroreflective sheeting conforms to the requirements of this standard, must appear at least once on the exposed surface of each white or red segment of retroreflective sheeting, and at least once every 300 mm on retroreflective sheeting that is white only. The characters must be not less than 3 mm high, and must be permanently stamped, etched, molded, or printed in indelible ink.

S8.2.1.4 *Application pattern.*

S8.2.1.4.1 *Alternating red and white materials.*

S8.2.1.4.1.1 As shown in Figures 12–1 and 12–2, where alternating material is installed, except for a segment that is trimmed to clear obstructions, or lengthened to provide red sheeting near red lamps, alternating material must be installed with each white and red segment having a length of 300 ± 150 mm.

S8.2.1.4.1.2 Neither white nor red sheeting must represent more than two thirds the aggregate of any continuous strip marking the width of a trailer, or any continuous or broken strip marking its length.

S8.2.1.5 *Application location.* Need not be installed, as illustrated in Figure 12–2, on discontinuous surfaces such as outside ribs, stake post pickets on platform trailers, and external protruding beams, or to items of equipment such as door hinges and lamp bodies on trailers and body joints, stiffening beads, drip rails, and rolled surfaces on truck tractors.

S8.2.1.6 *Application spacing.* As illustrated in Figure 12–2, the edge of any white sheeting must not be located closer than 75 mm to the edge of the luminous lens area of any red or amber lamp that is required by this standard. The edge of any red sheeting must not be located closer than 75 mm to the edge of the luminous lens area of any amber lamp that is required by this standard.

S8.2.1.7 *Photometry.* Each retroreflective sheeting must be designed to conform to the photometry requirements of Table XVI–c when tested according to the procedure of S14.2.3 for the color and grade as specified by this section.

S8.2.2 *Conspicuity reflex reflectors.*

S8.2.2.1 *Certification marking.* The exposed surface of each conspicuity reflex reflector must be marked with the letters DOT–C which constitutes a certification that the reflector conforms to the conspicuity reflex reflector requirements of this standard. The certification must be not less than 3 mm high, and must be permanently stamped, etched, molded, or printed in indelible ink.

S8.2.2.2 *Application pattern.*

S8.2.2.2.1 *Alternating red and white materials.* Conspicuity reflex reflectors must be installed in a repetitive pattern of two or three white reflectors alternating with two or three red reflectors, with the center of each reflector not more than 100 mm from the center of each adjacent reflector.

S8.2.2.2.2 *White material.* White conspicuity reflex reflectors must be installed with the center of each reflector not more than 100 mm from the center of each adjacent reflector.

S8.2.2.3 *Photometry.*

S8.2.2.3.1 Each red conspicuity reflex reflector must be designed to conform to the photometry requirements of Table XVI–a for a red reflex reflector and Table XVI–b for a red conspicuity reflex reflector when tested according to the procedure of S14.2.3 as specified by this section.

S8.2.2.3.2 Each white conspicuity reflex reflector installed in only a horizontal orientation must be designed to conform to the photometry requirements of Table XVI–a for a white reflex reflector and Table XVI–b for a white horizontal conspicuity reflex reflector when tested according to the procedure of S14.2.3 as specified by this section.

S8.2.2.3.3 Each white conspicuity reflex reflector installed in a vertical orientation must be designed to conform to the photometry requirements of Table XVI–a for a white reflex reflector, and Table XVI–b for a white horizontal conspicuity reflex reflector and a white vertical conspicuity reflex reflector when tested according to the procedure of S14.2.3 as specified by this section.

S8.2.3 *Conspicuity system installation on trailers.*

S8.2.3.1 *Trailer rear.*

S8.2.3.1.1 *Element 1—alternating red and white materials.* As shown in Figure 11, a strip of sheeting or conspicuity reflex reflectors, as horizontal as practicable, must be applied across the full width of the trailer, as close to the extreme edges as practicable, and as close as practicable to not less than 375 mm and not more than 1525 mm above the road surface at the strip centerline with the trailer at curb weight.

S8.2.3.1.2 *Element 2—white.* (not required for container chassis or for platform trailers without bulkheads).

S8.2.3.1.2.1 As shown in Figure 11, two pairs of strips of sheeting or conspicuity reflex reflectors, each pair consisting of strips 300 mm long of Grade DOT–C2, DOT–C3, or DOT–C4, must be applied horizontally and vertically to the right and left upper contours of the body, as viewed from the rear, as close to the top of the trailer and as far apart as practicable.

S8.2.3.1.2.2 If the perimeter of the body, as viewed from the rear, is other than rectangular, the strips may be applied along the perimeter, as close as practicable to the uppermost and outermost areas of the rear of the body on the left and right sides.

S8.2.3.1.3 *Element 3—alternating red and white materials.* (not required for trailers without underride protection devices).

S8.2.3.1.3.1 As shown in Figure 11, a strip of Grade DOT–C2 sheeting no less than 38 mm wide or reflectors must be applied across the full width of the horizontal member of the rear underride protection device.

S8.2.3.2 *Trailer side—alternating red and white materials.*

S8.2.3.2.1 As shown in Figure 11, a strip of sheeting or conspicuity reflex reflectors must be applied to each side, as horizontal as practicable, originating and terminating as close to the front and rear as practicable, as close as practicable to not less than 375 mm and not more than 1525 mm above the road surface at the strip centerline at curb weight, except that at the location chosen the strip must not be obscured in whole or in part by other motor vehicle equipment or trailer cargo.

S8.2.3.2.2 The strip need not be continuous as long as not less than half the length of the trailer is covered and the spaces are distributed as evenly as practicable.

S8.2.3.2.3 If necessary to clear rivet heads or other similar obstructions, Grade DOT–C2 sheeting may be separated into two 25 mm wide strips of the same length and color, separated by a space of not more than 25 mm and used in place of the retroreflective sheeting that would otherwise be applied.

S8.2.4 *Conspicuity system installation on truck tractors.*

S8.2.4.1 *Element 1—alternating red and white materials.* As shown in Figure 13, two strips of sheeting or conspicuity reflex reflectors, each not less than 600 mm long, located as close as practicable to the edges of the rear fenders, mudflaps, or the mudflap support brackets, must be applied to mark the width of the truck tractor.

S8.2.4.1.1 The strips must be mounted as horizontal as practicable, in a vertical plane facing the rear, on the rear fenders, on the mudflap support brackets, on plates attached to the mudflap support brackets, or on the mudflaps.

S8.2.4.1.2 Strips on mudflaps must be mounted not lower than 300 mm below the upper horizontal edge of the mudflap. If the vehicle is certified with temporary mudflap support brackets, the strips must be mounted on the mudflaps or on plates transferable to permanent mudflap support brackets.

S8.2.4.1.3 For a truck tractor without mudflaps, the strips may be mounted outboard of the frame on brackets behind the rear axle or on brackets ahead of the rear axle and above the top of the rear tires at unladen vehicle height, or they may be mounted directly or indirectly to the back of the cab as close to the outer edges as practicable, above the top of the tires, and not more than 1525 mm above the road surface at unladen vehicle height.

S8.2.4.1.4 If the strips are mounted on the back of the cab, no more than 25% of their cumulative area may be obscured by vehicle equipment as determined in a rear orthogonal view.

S8.2.4.2 *Element 2—white.* As shown in Figure 13, two pairs of strips of sheeting or conspicuity reflex reflectors, each pair consisting of strips 300 mm long, must be applied horizontally and vertically as practicable to the right and left upper contours of the cab, as close to the top of the cab and as far apart as practicable.

S8.2.4.2.1 No more than 25% of their cumulative area may be obscured by vehicle equipment as determined in a rear orthogonal view.

S8.2.4.2.2 If one pair must be relocated to avoid obscuration by vehicle equipment, the other pair may be relocated in order to be mounted symmetrically.

S8.2.4.2.3 If the rear window is so large as to occupy all the practicable space, the material may be attached to the edge of the window itself.

S9 *Associated equipment requirements.*

S9.1 *Turn signal operating unit.*

S9.1.1 The turn signal operating unit installed on passenger cars, multipurpose passenger vehicles, trucks, and buses less than 2032 mm in overall width must be self-canceling by steering wheel rotation and capable of cancellation by a manually operated control.

S9.1.2 *Physical tests.* Each turn signal operating unit must be designed to conform to all applicable performance requirements of S14.9.

S9.2 *Turn signal flasher.*

S9.2.1 The means of producing the turn signal pilot indicator signal may be incorporated in the flasher. A means of producing an audible signal may be incorporated in the flasher.

S9.2.2 *Physical tests.* Each turn signal flasher must be designed to conform to all applicable performance requirements of S14.9.

S9.3 *Turn signal pilot indicator.*

S9.3.1 Each vehicle equipped with a turn signal operating unit where any turn signal lamp is not visible to the driver must also have an illuminated pilot indicator to provide a clear and unmistakable indication that the turn signal system is activated.

S9.3.2 The indicator must consist of one or more lights flashing at the same frequency as the turn signal lamps.

S9.3.3 The indicator must function satisfactorily under all test conditions

imposed on the turn signal flasher in S14.9.

S9.3.4 *Indicator size and color.*

S9.3.4.1 If the indicator is located inside the vehicle it must emit a green colored light and have a minimum area equivalent to a 3/16 in diameter circle.

S9.3.4.2 If the indicator is located outside of the vehicle it must emit a yellow light and have a minimum projected illuminated area of 0.1 sq in.

S9.3.5 The minimum required illuminated area of the indicator must be visible to any tangent on the 95th eyellipse as defined in SAE J941b, *Motor Vehicle Driver's Eye Range,* February 1969, (incorporated by reference, see 571.108 S5.2 of this title) with the steering wheel turned to a straight ahead driving position and in the design location for an adjustable wheel or column.

S9.3.6 *Turn signal lamp failure.* Failure of one or more turn signal lamps such that the minimum photometric performance specified in Tables VI or VII is not being met must be indicated by the turn signal pilot indicator by a ''steady on'', ''steady off'', or by a significant change in the flashing rate, except when a variable-load turn signal flasher is used on a multipurpose passenger vehicle, truck, or bus 2032 mm or more in overall width, on a truck that is capable of accommodating a slide in camper, or on any vehicle equipped to tow trailers.

S9.4 *Headlamp beam switching device.* Each vehicle must have a means of switching between lower and upper beams designed and located so that it may be operated conveniently by a simple movement of the driver's hand or foot. The switch must have no dead point and, except as provided by S6.1.5.2, the lower and upper beams must not be energized simultaneously except momentarily for temporary signaling purposes or during switching between beams.

S9.4.1 *Semi-automatic headlamp beam switching device.* As an alternative to S9.4, a vehicle may be equipped with a semi-automatic means of switching between lower and upper beams.

S9.4.1.1 *Operating instructions.* Each semi-automatic headlamp switching device must include operating instructions to permit a driver to operate the device correctly including; how to turn the automatic control on and off, how to adjust the provided sensitivity control, and any other specific instructions applicable to the particular device.

S9.4.1.2 *Manual override.* The device must include a means convenient to the driver for switching to the opposite beam from the one provided.

S9.4.1.3 *Fail safe operation.* A failure of the automatic control portion of the device must not result in the loss of manual operation of both upper and lower beams.

S9.4.1.4 *Automatic dimming indicator.* There must be a convenient means of informing the driver when the device is controlling the headlamps automatically. The device shall not affect the function of the upper beam indicator light.

S9.4.1.5 *Lens accessibility.* The device lens must be accessible for cleaning when the device is installed on a vehicle.

S9.4.1.6 *Mounting height.* The center of the device lens must be mounted no less than 24 in. above the road surface.

S9.4.1.7 *Physical tests.* Each semi-automatic headlamp beam switching device must be designed to conform to all applicable performance requirements of S14.9.

S9.5 *Upper beam headlamp indicator.* Each vehicle must have a means for indicating to the driver when the upper beams of the headlighting system are activated.

S9.5.1 *Indicator size and location.* The upper beam headlamp indicator must have a minimum area equivalent to that of a 3/16 in diameter circle, and be plainly visible to drivers of all heights under normal driving conditions when headlamps are required.

S9.6 *Vehicular hazard warning signal operating unit.*

S9.6.1 The unit may be an independent device or it may be combined with the turn signal operating unit. If combined with the turn signal operating unit, the actuating motion of the hazard function must differ from the actuating motion of the turn signal function.

S9.6.2 *Operating unit switch.* The unit must operate independently of the ignition or equivalent switch. If the actuation of the hazard function requires the operation of more than one switch, a means must be provided for actuating all switches simultaneously by a single driver action.

S9.6.3 *Physical tests.* Each vehicular hazard warning signal operating unit must be designed to conform to all applicable performance requirements of S14.9.

S9.7 *Vehicular hazard warning signal flasher.*

S9.7.1 The means of producing the hazard warning signal pilot indicator signal may be incorporated in the flasher. A means of producing an audible signal may be incorporated in the flasher.

S9.7.2 *Physical tests.* Each vehicular hazard warning signal flasher must be designed to conform to all applicable performance requirements of S14.9.

S9.8 *Vehicular hazard warning signal pilot indicator.*

S9.8.1 In vehicles equipped with right hand and left hand turn signal pilot indicators, both pilot indicators and /or a separate pilot indicator must flash simultaneously while the vehicle hazard warning signal operating unit is turned on.

S9.8.2 In vehicles equipped with a single turn signal pilot indicator, a separate vehicular hazard warning signal pilot indicator must flash and the turn signal pilot indicator may flash while the vehicle hazard warning signal operating unit is turned on.

S9.8.3 The indicator must function satisfactorily under all test conditions imposed on the vehicular hazard warning signal flasher in S14.9.

S9.8.4 *Indicator size and color.* If the vehicular hazard warning signal pilot indicator is not combined with the turn signal pilot indicator, it must emit a red color and have a minimum area equivalent to a 0.5 in diameter circle.

S10 *Headlighting system requirements.*

S10.1 *Vehicle headlighting systems.*

S10.1.1 Each passenger car, multipurpose passenger vehicle, truck and bus must be equipped with a headlighting system conforming to the requirements of Table II and this standard.

S10.1.2 Each motorcycle must be equipped with a headlighting system conforming to S10.17 of this standard or one half of any headlighting system of Table II which provides both a full upper beam and full lower beam.

S10.2 *Aiming.* Each headlamp system installed on a motor vehicle must be aimable in accordance with the requirements of S10.18.

S10.3 *Number. See Tables I–a and I–c.*

S10.4 *Color of light.* See Tables I–a and I–c.

S10.5 *Mounting location.* See Tables I–a and I–c and S6.1.3.5.

S10.6 *Mounting height.* See Tables I–a and I–c.

S10.7 *Activation.* See Tables I–a and I–c, Table II, and S6.1.5.

S10.8 *Effective projected luminous lens area.* No requirement.

S10.9 *Visibility.* No requirement.

S10.10 *Indicator.* See S9.5.

S10.11 *Markings.* See S6.5.

S10.12 *Spacing to other lamps.* See S6.1.3.5.

S10.13 *Sealed beam headlighting systems.* All sealed beam headlighting

systems must be of a type designated in Table II-a. Each sealed beam headlamp must be designed to conform to the specifications furnished with respect to it pursuant to Appendix C of part 564 of this chapter and Table II-a of this standard. The dimensions applicable to the design of a specific type are those identified with an ''I'' for interchangeability specified on the applicable drawing(s) filed in Docket No. NHTSA 98–3397.

S10.13.1 *Installation.* A sealed beam headlighting system must consist of the correct number of designated headlamp units as specified for the applicable system in Table II-a. The units must have their beams activated as specified in Table II-a. A system must provide in total not more than two upper beams and two lower beams.

S10.13.2 *Simultaneous aim.* Type F sealed beam headlamps may be mounted on common or parallel seating and aiming planes to permit simultaneous aiming of both headlamps provided that there is no provision for adjustment between the common or parallel aiming and seating planes of the two lamps. When tested with any conforming Type UF and LF headlamps in accordance with S14.2.5, the assembly (consisting of the Type UF and LF headlamps, mounting rings, the aiming/seating rings, and aim adjustment mechanism) must be designed to conform to the applicable photometric requirements.

S10.13.3 *Photometry.* Each sealed beam headlamp must be designed to conform to the photometry requirements of Table XVIII for upper beam and Table XIX for lower beam as specified in Table II-a for the specific headlamp unit and aiming method, when tested according to the procedure of S14.2.5.

S10.13.4 *Physical tests.*

S10.13.4.1 Each sealed beam headlamp must be designed to conform to the performance requirements of the corrosion test, vibration test, inward force test, torque deflection test, headlamp connector test, headlamp wattage test, and aiming adjustment tests of S14.6.

S10.13.4.2 Each sealed beam headlamp except a Type G or Type H must be designed to conform to the performance requirements of the retaining ring test of S14.6.

S10.13.4.3 Each sealed beam headlamp must be designed to conform to the performance requirements of the color test of S14.4. Each sealed beam headlamp that does not incorporate a glass lens must be designed to conform to the plastic optical materials test of S14.4.

S10.14 *Integral beam headlighting systems.* All integral beam headlighting systems must be of a type designated in Table II-c.

S10.14.1 *Installation.* An integral beam headlighting system must consist of the correct number of designated headlamp units as specified for the applicable system in Table II-c. The units must have their beams activated as specified in Table II-c. A system must provide in total not more than two upper beams and two lower beams.

S10.14.2 *Aimability.*

S10.14.2.1 A system that incorporates any headlamp or beam contributor that does not have a VHAD as an integral and indivisible part of the headlamp or beam contributor must be designed so that the applicable photometric requirements are met when any correctly aimed and photometrically conforming headlamp or beam contributor is removed from its mounting and aiming mechanism, and is replaced without reaim by any conforming headlamp or beam contributor of the same type.

S10.14.2.2 A system that incorporates more than one beam contributor providing a lower beam, and/or more than one beam contributor providing an upper beam, shall be designed to conform to the on-vehicle aiming requirements specified in S10.18.8.

S10.14.3 *Simultaneous aim.* An integral beam headlighting system consisting of four individual headlamps or beam contributors may have the headlamp units mounted in an assembly to permit simultaneous aiming of the beam(s) contributors, providing that with any complying contributor the assembly complete with all lamps meets the applicable photometric requirements when tested in accordance with S14.2.5.

S10.14.4 *Markings.* An integral beam headlamp with a single light source providing the lower beam must have its lens permanently marked with ''L''. An integral beam headlamp with a single light source providing the upper beam must have its lens permanently marked with ''U''.

S10.14.5 *Additional light sources.* An integral beam headlamp may incorporate light sources that are used for purposes other than headlighting and are capable of being replaced.

S10.14.6 *Photometry.* Each integral beam headlamp must be designed to conform to the photometry requirements of Table XVIII for upper beam and Table XIX for lower beam as specified in Table II-c for the specific headlamp unit and aiming method, when tested according to the procedure of S14.2.5.

S10.14.7 *Physical tests.*

S10.14.7.1 Each integral beam headlamp must be designed to conform to the performance requirements of the corrosion test, temperature cycle test, vibration test, inward force test, headlamp connector test, and aiming adjustment tests of S14.6.

S10.14.7.2 Each integral beam headlamp that is not designed to conform to the performance requirements of the sealing test of S14.6 must be designed to conform to the performance requirements of the connector-corrosion test, dust test, and humidity test of S14.6.

S10.14.7.3 Each integral beam headlamp except those with a glass lens must be designed to conform to the performance requirements of the abrasion test of S14.6.

S10.14.7.4 Each integral beam headlamp except those with a nonreplaceable glass lens must be designed to conform to the performance requirements of the chemical resistance test of S14.6.

S10.14.7.5 Each integral beam headlamp except those with a glass lens and a non-plastic reflector must be designed to conform to the performance requirements of the internal heat test of S14.6.

S10.14.7.6 Each integral beam headlamp incorporating a replaceable lens must be designed to conform to the performance requirements of the chemical resistance of reflectors of replaceable lens headlamps test and the corrosion resistance of reflectors of replaceable lens headlamps test of S14.6.

S10.14.7.7 Each integral beam headlamp capable of being mechanically aimed by externally applied headlamp aiming devices specified in SAE J602 OCT80, Headlamp Aiming Device for Mechanically Aimable Sealed Beam Headlamp Units, (incorporated by reference, see 571.108 S5.2 of this title) must be designed to conform to the performance requirements of the torque deflection test of S14.6.

S10.14.7.8 Each integral beam headlamp must be designed to conform to the performance requirements of the color test of S14.4. Each integral beam headlamp that does not incorporate a glass lens must be designed to conform to the performance requirements of the plastic optical materials test of S14.4.

S10.15 *Replaceable bulb headlighting systems.* All replaceable bulb headlighting systems must be of a type designated in Table II-d.

S10.15.1 *Installation.* A replaceable bulb headlighting system must consist of either two or four headlamps as

specified for the applicable system in Table II-d. The headlamps must have their beams activated as specified in Table II-d. A system must provide in total not more than two upper beams and two lower beams and must incorporate not more than two replaceable light sources in each headlamp.

S10.15.2 *Aiming restrictions.* Each replaceable bulb headlamp designed to conform to the external aiming requirements of S10.18.7 must have no mechanism that allows adjustment of an individual light source, or if there are two light sources, independent adjustments of each reflector.

S10.15.3 *Replacement lens reflector units.* Each lens reflector unit manufactured as replacement equipment must be designed to conform to applicable photometry requirements when any replaceable light source designated for such a unit is inserted in it.

S10.15.4 *Markings.*

S10.15.4.1 A replaceable bulb headlamp in a four headlamp system providing lower beam must have its lens permanently marked with ''L''. A replaceable bulb headlamp in a four headlamp system providing upper beam must have its lens permanently marked with ''U''.

S10.15.4.1.1 No such markings are required if the light sources in the headlamp are any combination of dual filament light sources other than HB2.

S10.15.5 *Additional light sources.* A replaceable bulb headlamp may incorporate replaceable light sources that are used for purposes other than headlighting.

S10.15.6 *Photometry.* Each replaceable bulb headlamp must be designed to conform to the photometry requirements of Table XVIII for upper beam and Table XIX for lower beam as specified in Table II-d for the specific headlamp unit and aiming method, when tested according to the procedure of S14.2.5 using any replaceable light source designated for use in the system under test.

S10.15.7 *Physical tests.*

S10.15.7.1 Each replaceable bulb headlamp must be designed to conform to the performance requirements of the corrosion test, corrosion-connector test, dust test, temperature cycle test, humidity test, vibration test, inward force test, headlamp connector test, and aiming adjustment tests of S14.6.

S10.15.7.2 Each replaceable bulb headlamp except those with a glass lens must be designed to conform to the performance requirements of the abrasion test of S14.6.

S10.15.7.3 Each replaceable bulb headlamp except those with a nonreplaceable glass lens must be designed to conform to the performance requirements of the chemical resistance test of S14.6.

S10.15.7.4 Each replaceable bulb headlamp except those with a glass lens and a non-plastic reflector must be designed to conform to the performance requirements of the internal heat test of S14.6.

S10.15.7.5 Each replaceable bulb headlamp incorporating a replaceable lens must be designed to conform to the performance requirements of the chemical resistance of reflectors of replaceable lens headlamps test and the corrosion resistance of reflectors of replaceable lens headlamps test of S14.6.

S10.15.7.6 Each replaceable bulb headlamp capable of being mechanically aimed by externally applied headlamp aiming devices specified in SAE J602 OCT80, *Headlamp Aiming Device for Mechanically Aimable Sealed Beam Headlamp Units,* (incorporated by reference, see 571.108 S5.2 of this title) must be designed to conform to the performance requirements of the torque deflection test of S14.6.

S10.15.7.7 Each replaceable bulb headlamp must be designed to conform to the performance requirements of the color test of S14.4. Each replaceable bulb headlamp that does not incorporate a glass lens must be designed to conform to the performance requirements of the plastic optical materials test of S14.4.

S10.16 *Combination headlighting systems.* All combination headlighting systems must be of a type designated in Table II–b.

S10.16.1 *Installation.* A combination headlighting system must consist of the correct number of designated headlamp units as specified for the applicable system in Table II-b. The units must have their beams activated as specified in Table II-b. A system must provide in total not more than two upper beams and two lower beams. When installed on a motor vehicle, the headlamps (or parts thereof) that provide the lower beam must be of the same type, and provide a symmetrical effective projected luminous lens area when illuminated.

S10.16.2 *Photometry.* Each combination headlamp must be designed to conform to the photometry requirements of Table XVIII for upper beam and Table XIX for lower beam as specified in Table II-b for the specific headlamp unit and aiming method, when tested according to the procedure of S14.2.5.

S10.16.3 *Physical tests.*

S10.16.3.1 Any component headlamp of a combination headlighting system that is a Type F sealed beam headlamp must be designed to conform to the performance requirements of S10.13.4.

S10.16.3.2 Any component headlamp of a combination headlighting system that is an integral beam headlamp must be designed to conform to the performance requirements of S10.14.7.

S10.16.3.3 Any component headlamp of a combination headlighting system that is a replaceable bulb headlamp must be designed to conform to the performance requirements of S10.15.7.

S10.17 *Motorcycle headlighting systems.* A motorcycle headlighting system may consist of:

(a) One half of any headlighting system of Table II which provides both a full upper beam and full lower beam, and is designed to conform to the requirements for that headlamp type. Where more than one lamp must be used, the lamps shall be mounted vertically, with the lower beam as high as practicable, or

(b) A headlighting system designed to conform to the requirements of paragraphs S10.17.1 through S10.17.5.

S10.17.1 *Installation.* The headlighting system installed on a motorcycle must consist of one of the system types specified in this paragraph, and must be located on the front.

S10.17.1.1 *Single headlamp.*

S10.17.1.1.1 If the system consists of a single headlamp, it must be mounted on the vertical centerline of the motorcycle.

S10.17.1.1.2 If the headlamp contains more than one light source, each light source must be mounted on the vertical centerline with the upper beam no higher than the lower beam, or horizontally disposed about the vertical centerline and mounted at the same height.

S10.17.1.1.3 If the light sources are horizontally disposed about the vertical centerline, the distance between the closest edges of the effective projected luminous lens area in front of the light sources must not be greater than 200 mm.

S10.17.1.2 *Two headlamps with both beams.*

S10.17.1.2.1 If the system consists of two headlamps, each of which provides both an upper and lower beam, the headlamps must be mounted either at the same height and symmetrically

disposed about the vertical centerline or mounted on the vertical centerline.

S10.17.1.2.2 If the headlamps are horizontally disposed about the vertical centerline, the distance between the closest edges of their effective projected luminous lens areas must not be greater than 200 mm.

S10.17.1.3 *Two headlamps, upper beam and lower beam.*

S10.17.1.3.1 If the system consists of two headlamps, one of which provides an upper beam and one of which provides the lower beam, the headlamps must be located on the vertical centerline with the upper beam no higher than the lower beam, or horizontally disposed about the vertical centerline and mounted at the same height.

S10.17.1.3.2 If the headlamps are horizontally disposed about the vertical centerline, the distance between the closest edges of their effective projected luminous lens areas must not be greater than 200 mm.

S10.17.2 *Motorcycle replaceable bulb headlamp marking.* Each replaceable bulb headlamp that is designed to conform to S10.17(b) and that is equipped with a light source other than a replaceable light source meeting the requirements of S11, must have the word ''motorcycle'' permanently marked on the lens in characters not less than 3 mm in height.

S10.17.3 *Photometry.* Each motorcycle headlamp that is not designed to conform to S10.17(a), must be designed to conform to the photometry requirements of Table XX when tested according to the procedure of S14.2.5.

S10.17.4 *Physical tests.* Each motorcycle headlamp that is not designed to conform to S10.17(a) must be designed to conform to the performance requirements of the vibration test, moisture test, dust test, and corrosion test of S14.5, the out of focus test of S14.3, the color test of S14.4, and each motorcycle headlamp that does not incorporate a glass lens must be designed to conform to the performance requirements of the plastic optical materials test of S14.4.

S10.17.5 *Motorcycle headlamp modulation system.* A headlamp on a motorcycle may be activated to modulate either the upper beam or the lower beam from its maximum intensity to a lesser intensity, provided that:

S10.17.5.1 *Modulation.*

(a) The rate of modulation must be 240 ± 40 cycles per minute.

(b) The headlamp must be operated at maximum power for 50 to 70 percent of each cycle.

(c) The lowest intensity at any test point must be not less than 17 percent of the maximum intensity measured at the same point.

(d) The modulator switch must be wired in the power lead of the beam filament being modulated and not in the ground side of the circuit.

(e) Means must be provided so that both the lower beam and upper beam remain operable in the event of a modulator failure.

(f) The system must include a sensor mounted with the axis of its sensing element perpendicular to a horizontal plane. Headlamp modulation must cease whenever the level of light emitted by a tungsten filament light operating at 3000° Kelvin is either less than 270 lux of direct light for upward pointing sensors or less than 60 lux of reflected light for downward pointing sensors. The light is measured by a silicon cell type light meter that is located at the sensor and pointing in the same direction as the sensor. A Kodak Gray Card (Kodak R–27) is placed at ground level to simulate the road surface in testing downward pointing sensors.

(g) When tested in accordance with the test profile shown in Figure 9, the voltage drop across the modulator when the lamp is on at all test conditions for 12 volt systems and 6 volt systems must not be greater than 0.45 volt. The modulator must meet all the provisions of the standard after completion of the test profile shown in Figure 9.

(h) Means must be provided so that both the lower and upper beam function at design voltage when the headlamp control switch is in either the lower or upper beam position when the modulator is off.

S10.17.5.2 *Replacement modulators.* Each modulator not intended as original equipment, or its container, must be labeled with the maximum wattage, and the minimum wattage appropriate for its use.

S10.17.5.2.1 *Replacement performance.* Each modulator, not intended as original equipment, must comply with S10.17.5.1 (a) through (g) when connected to a headlamp of the maximum rated power and a headlamp of the minimum rated power, and must provide means so that the modulated beam functions at design voltage when the modulator is off.

S10.17.5.2.2 *Replacement instructions.* Instructions, with a diagram, must be provided for mounting the light sensor including location on the motorcycle, distance above the road surface, and orientation with respect to the light.

S10.18 *Headlamp aimability performance requirements.*

S10.18.1 *Headlamp mounting and aiming.* Except as provided in this paragraph, each headlamp must be installed on a motor vehicle with a mounting and aiming mechanism that permits aim inspection and adjustment of both vertical and horizontal aim, and is accessible for those purposes without removal of any vehicle parts, except for protective covers removable without the use of tools.

S10.18.1.1 The axis of the light beams must be adjustable to the left, right, up, or down from the designed setting, the amount of adjustability to be determined by practical operating conditions and the type of equipment.

S10.18.1.2 The adjustments must be conveniently made by one person with tools ordinarily available. When the headlamps are secured, the aim will not be disturbed under ordinary conditions of service.

S10.18.2 *Headlamp aiming systems.* When a headlamp system is installed on a motor vehicle, it must be aimable with at least one of the following: An externally applied aiming device, as specified in S10.18.7; an on-vehicle headlamp aiming device installed by the vehicle or lamp manufacturer, as specified in S10.18.8; or by visual/optical means, as specified in S10.18.9.

S10.18.3 *Aim adjustment interaction.* When installed on the vehicle, adjustment of one aim axis through its full on-vehicle range must not cause the aim of the other axis to deviate more than ± 0.76°. If the performance specified is not achievable, the requirements of S10.18.3.1 apply, except that if the aiming mechanism is not a VHAD, the requirements specific to VHADs are not applicable, and the instruction must be specific to the aiming mechanism installed.

S10.18.3.1 Should the mechanism not meet the requirements of S10.18.3, a cautionary label must be placed adjacent to the mechanism stating the caution and including either the reason for the caution or the corrective action necessary. Each such label must also refer the reader to the vehicle operator's manual for complete instructions. Each such vehicle must be equipped with an operator's manual containing the complete instructions appropriate for the mechanism installed.

S10.18.4 *Horizontal adjustment-visually aimed headlamp.* A visually/optically aimable headlamp that has a lower beam must not have a horizontal adjustment mechanism unless such mechanism meets the requirements of this standard for on vehicle aiming as specified in S10.18.8.

S10.18.5 *Optical axis marking.*

S10.18.5.1 *Optical axis marking-vehicle.* Each motor vehicle must be equipped with headlamps or beam contributors which have a mark or markings that are visible from the front of the headlamp when installed on the vehicle to identify the optical axis of the headlamp to assure proper horizontal and vertical alignment of the aiming screen or optical aiming equipment. The manufacturer is free to choose the design of the mark or markings. The mark or markings may be on the interior or exterior of the lens or indicated by a mark or central structure on the interior or exterior of the headlamp.

S10.18.5.2 *Optical axis marking-lamp.* Each headlamp or beam contributor that is not visually/optically aimable in accordance with S10.18.9 of this standard must be equipped with fiducial marks, aiming pads, or similar references of sufficient detail and accuracy, for determination of an appropriate vehicle plane to be used with the photometric procedures of S14.2.5 for correct alignment with the photometer axis when being tested for photometric compliance, and to serve for the aiming reference when the headlamp or beam contributor is installed on a motor vehicle. The fiducial marks, aiming pads, or similar references are protrusions, bubble vials, holes, indentations, ridges, scribed lines, or other readily identifiable marks established and described by the vehicle or headlamp manufacturer.

S10.18.5.3 *Optical axis marking-visual/optical aim headlamp.* There must be a mark or markings identifying the optical axis of the headlamp visible from the front of the headlamp when installed on the vehicle, to assure proper horizontal and vertical alignment of the aiming screen or optical aiming equipment with the headlamp being aimed. The manufacturer is free to choose the design of the mark or markings. The mark or markings may be on the interior or exterior of the lens or indicated by a mark or central structure on the interior or exterior of the headlamp.

S10.18.6 *Moveable reflectors.* Each headlamp aimed by moving the reflector relative to the lens and headlamp housing, or vice versa, must conform with the photometric requirements applicable to it when tested according to the procedure of S14.2.5 with the lens at any position relative to the reflector within the full range of vertical pitch on the vehicle on which the headlamp system is installed and a horizontal range of ± 2.5°. Additionally it must comply with the aiming adjustment requirements of S14.6.

S10.18.7 *External aiming.* Each headlighting system that is capable of being mechanically aimed by externally applied headlamp aiming devices must be mechanically aimable using the equipment specified in SAE J602 *Headlamp Aiming Device for Mechanically Aimable Sealed Beam Headlamp Units,* October 1980, (incorporated by reference, see 571.108 S5.2 of this title) without the removal of any ornamental trim rings, covers, wipers or other vehicle parts.

S10.18.7.1 *Headlamp aiming device locating plates.* Each headlighting system which is designed to use the Headlamp Aiming Device Locating Plates with adjustable legs for the 100×165 mm unit and the 142×200 mm unit, and which has adjustable length legs, must meet the following requirements:

S10.18.7.1.1 The lens must have three aiming pads which meet the requirements of Figure 4, *Dimensional Specifications for Location of Aiming Pads on Replaceable Bulb Headlamp Units.* The aiming pads need not be centered at the geometric center of the lens, or on the optical axis. Except as provided in S10.18.7.1.2, a whole number, which represents the distance in tenths of an inch (i.e. 0.3 inch = 3) from the aiming reference plane to the respective aiming pads which are not in contact with that plane, must be inscribed adjacent to each respective aiming pad on the lens. The height of these numbers must be not less than .157 inch (4 mm). If there is interference between the plane and the area of the lens between the aiming pads, the whole number represents the distance to a secondary plane. The secondary plane must be located parallel to the aiming reference plane and as close to the lens as possible without causing interference.

S10.18.7.1.2 If the most forward aiming pad is the lower inboard aiming pad, then the dimensions may be placed anywhere on the lens. The dimension for the outboard aiming pad (Dimension F in Figure 4) must be followed by the letter ''H'' and the dimension for the center aiming pad must be followed by the letter ''V.'' The dimensions must be expressed in tenths of an inch.

S10.18.7.2 *Nonadjustable headlamp aiming device locating plates.* Each headlamp may be designed to use the nonadjustable Headlamp Aiming Device Locating Plate for the 100×165 mm unit, the 142×200 mm unit, the 146 mm diameter unit, or the 178 mm diameter unit of SAE J602 OCT80, *Headlamp Aiming Device for Mechanically Aimable Sealed Beam Headlamp Units,* (incorporated by reference, see 571.108 S5.2 of this title), or the 92×150 mm Type F unit, and incorporate lens-mounted aiming pads as specified for those units pursuant to Appendix C of part 564 of this chapter. If so designed, no additional lens marking is necessary to designate the type of plate or dimensions.

S10.18.8 *On-vehicle aiming.* Each headlighting system that is capable of being aimed by equipment installed on the vehicle must include a Vehicle Headlamp Aiming Device (VHAD) that conforms to the following requirements:

S10.18.8.1 *Aim.* The VHAD must provide for headlamp aim inspection and adjustment in both the vertical and horizontal axes.

S10.18.8.1.1 *Vertical aim.* The VHAD must include the necessary references and scales relative to the horizontal plane to assure correct vertical aim for photometry and aiming purposes. An off vehicle measurement of the angle of the plane of the ground is permitted. In addition, an equal number of graduations from the ''0'' position representing angular changes in the axis in the upward and downward directions must be provided.

S10.18.8.1.1.1 Each graduation must represent a change in the vertical position of the mechanical axis not larger than 0.19° (1 in at 25 ft) to provide for variations in aim at least 1.2° above and below the horizontal, and have an accuracy relative to the zero mark of less than 0.1°.

S10.18.8.1.1.2 The VHAD must be marked to indicate headlamp aim movement in the upward and downward directions.

S10.18.8.1.1.3 Each graduation must indicate a linear movement of the scale indicator of not less than 0.05 in (1.27 mm) if a direct reading analog indicator is used. If a remote reading indicator is provided, it must represent the actual aim movement in a clear, understandable format.

S10.18.8.1.1.4 The vertical indicator must perform through a minimum range of ± 1.2°.

S10.18.8.1.1.5 Means must be provided in the VHAD for compensating for deviations in floor slope less than 1.2° from the horizontal that would affect the correct positioning of the headlamp for vertical aim.

S10.18.8.1.1.6 The graduations must be legible under an illumination level not greater than 30 foot candles, measured at the top of the graduation, by an observer having 20/20 vision (Snellen), and must permit aim adjustment to within 0.19° (1 in at 25 ft).

S10.18.8.1.2 *Horizontal aim.* The VHAD must include references and scales relative to the longitudinal axis of

the vehicle necessary to assure correct horizontal aim for photometry and aiming purposes. An ''0'' mark must be used to indicate alignment of the headlamps relative to the longitudinal axis of the vehicle. In addition, an equal number of graduations from the ''0'' position representing equal angular changes in the axis relative to the vehicle axis must be provided.

S10.18.8.1.2.1 Each graduation must represent a change in the horizontal position of the mechanical axis not greater than 0.38° (2 in at 25 ft) to provide for variations in aim at least 0.76° (4 in at 25 ft) to the left and right of the longitudinal axis of the vehicle, and must have an accuracy relative to the zero mark of less than 0.1°.

S10.18.8.1.2.2 The VHAD must be marked to indicate headlamp aim movement in the left and right directions.

S10.18.8.1.2.3 The graduations must be legible under an illumination level not greater than 30 foot candles, measured at the top of the graduation, by an observer having 20/20 vision (Snellen), and must permit aim adjustment to within 0.38° (2 in at 25 ft).

S10.18.8.1.2.4 The horizontal indicator must perform through a minimum range of ± 0.76° (4 in at 25 ft); however, the indicator itself must be capable of recalibration over a movement of ± 2.5° relative to the longitudinal axis of the vehicle to accommodate any adjustment necessary for recalibrating the indicator after vehicle repair from accident damage.

S10.18.8.2 *Aiming instructions.*

S10.18.8.2.1 The instructions for properly aiming the headlighting system using the VHAD must be provided on a label permanently affixed to the vehicle adjacent to the VHAD, or in the vehicle operator's manual. The instructions must advise that the headlighting system is properly aimed if the appropriate vertical plane (as defined by the vehicle manufacturer) is perpendicular to both the longitudinal axis of the vehicle, and a horizontal plane when the vehicle is on a horizontal surface, and the VHAD is set at ''0'' vertical and ''0'' horizontal.

S10.18.8.2.2 Should a remote indicator or a remote indicator and adjuster be provided, the instructions must be placed in the operator's manual, and may also be placed on a label adjacent to the VHAD.

S10.18.8.3 *Permanent calibration.* Each headlamp equipped with a VHAD must be manufactured with its calibration permanently fixed by its manufacturer. Calibration in this case means the process of accurately aligning the geometry of the VHAD devices with the beam pattern for the purposes of compliance with the standard.

S10.18.8.4 *Replacement units.* When tested according to the procedure of S14.2.5 with any replacement headlamp unit(s) or light sources intended for use in the system under test, the VHAD and headlighting system must be designed to conform to the photometric performance requirements applicable for the system under test.

S10.18.8.5 *Physical tests.* Each VHAD must be designed to conform with the performance requirements of S14.8.

S10.18.9 *Visual/optical aiming.* Each visually/optically aimable headlamp must be designed to conform to the following requirements:

S10.18.9.1 *Vertical aim, lower beam.* Each lower beam headlamp must have a cutoff in the beam pattern. It may be either on the left side or the right side of the optical axis, but once chosen for a particular headlamp system's design, the side chosen for the cutoff must not be changed for any headlamps intended to be used as replacements for those system's headlamps.

S10.18.9.1.1 *Vertical position of the cutoff.* The headlamp must be aimed vertically so that the cutoff is on the left side, at 0.4° down from the H–H line, or on the right side, at the H–H line.

S10.18.9.1.2 *Vertical gradient.* The gradient of the cutoff measured at either 2.5° L or 2.0° R must be not less than 0.13 based on the procedure of S10.18.9.1.5.

S10.18.9.1.3 *Horizontal position of the cutoff.* The width must be not less than 2°, with not less than 2° of its actual width centered at either 2.5° L, or 2.0° R.

S10.18.9.1.4 *Maximum inclination of the cutoff.* The vertical location of the highest gradient at the ends of the minimum width must be within ± 0.2° of the vertical location of the maximum gradient measured at the appropriate vertical line (at either 2.5° L for a left side cutoff, or 2.0° R for a right side cutoff).

S10.18.9.1.5 *Measuring the cutoff parameter.*

S10.18.9.1.5.1 The headlamp is mounted on a headlamp test fixture which simulates its actual design location on any vehicle for which the headlamp is intended. The fixture, with the headlamp installed, is attached to the goniometer table in such a way that the fixture alignment axes are coincident with the goniometer axes. The headlamp is energized at the specified test voltage. The cutoff parameter must be measured at a distance of 10 m from a photosensor with a 10 mm diameter.

S10.18.9.1.5.2 The headlamp beam pattern is aimed with the cutoff at the H–H axis. There is no adjustment, shimming, or modification of the horizontal axis of the headlamp or test fixture, unless the headlamp is equipped with a VHAD. In this case the VHAD is adjusted to zero.

S10.18.9.1.5.3 A vertical scan of the beam pattern is conducted for a headlamp with a left side gradient by aligning the goniometer on a vertical line at 2.5° L and scanning from 1.5° U to 1.5° D. For a headlamp with a right side gradient, a vertical scan of the beam pattern is conducted by aligning the goniometer on a vertical line at 2.0° R and scanning from 1.5° U to 1.5° D.

S10.18.9.1.5.4 Determine the maximum gradient within the range of the scan by using the formula: $G = \log E(a) - \log E(a + 0.1)$, where ''G'' is the gradient, ''E'' is illumination and ''a'' is vertical angular position. The maximum value of the gradient ''G'' determines the vertical angular location of the cutoff. Perform vertical scans at 1.0° L and R of the measurement point of the maximum gradient to determine the inclination.

S10.18.9.2 *Horizontal aim, lower beam.* There is no adjustment of horizontal aim unless the headlamp is equipped with a horizontal VHAD. If the headlamp has a VHAD, it is set to zero.

S10.18.9.3 *Vertical aim, upper beam.*

S10.18.9.3.1 If the upper beam is combined in a headlamp with a lower beam, the vertical aim of the upper beam must not be changed from the aim set using the procedures of S10.18.9.1 and S10.18.9.2 used for the lower beam.

S10.18.9.3.2 If the upper beam is not combined in a headlamp with a lower beam, the vertical aim of the upper beam is adjusted so that the maximum beam intensity is located on the H–H axis.

S10.18.9.4 *Horizontal aim, upper beam.*

S10.18.9.4.1 If the upper beam is combined in a headlamp with a lower beam, the horizontal aim of the upper beam must not be changed from the aim set using the procedures of S10.18.9.1 and S10.18.9.2 used for the lower beam.

S10.18.9.4.2 If the upper beam is not combined in a headlamp with the lower beam and has fixed horizontal aim or has a horizontal VHAD, then the headlamp is mounted on a headlamp test fixture which simulates its actual design location on any vehicle for which the headlamp is intended. The fixture, with the headlamp installed, is attached to the goniometer table in such a way that the fixture alignment axes are

coincident with the goniometer axes. The headlamp must be energized at 12.8 ± 0.20 mV. There is no adjustment, shimming, or modification of the horizontal axis of the headlamp or test fixture, unless the headlamp is equipped with a VHAD. In this case the VHAD is adjusted to zero.

S10.18.9.4.3 If the upper beam is not combined in a headlamp with a lower beam, and it does not have a VHAD, the horizontal aim of the upper beam is adjusted so that the maximum beam intensity is located on the V–V axis.

S10.18.9.5 *Photometry.* When tested according to the procedure of S14.2.5, a visually/optically aimable headlamp must be designed to conform to the lower beam requirements of columns; LB1V or LB2V of Table XIX–a, or LB3V of Table XIX–b, or LB4V of Table XIX–c.

S10.18.9.6 *Visual/optical aiming identification marking.* Each letter used in marking according to this paragraph must be not less than 3 mm high.

S10.18.9.6.1 The lens of a lower beam headlamp must be marked ''VOL'' if the headlamp is intended to be visually/optically aimed using the left side of the lower beam pattern. The lens of a lower beam headlamp must be marked ''VOR'' if the headlamp is intended to be visually/optically aimed using the right side of the lower beam pattern. The lens of a headlamp that is solely an upper beam headlamp and intended to be visually/optically aimed using the upper beam must be marked ''VO''.

S10.18.9.6.2 The lens of each sealed beam or integral beam headlamp must be marked ''VOR'' if the headlamp is of a type that was manufactured before May 1, 1997, and if such headlamp type has been redesigned since then to be visually/optically aimable.

S11 *Replaceable light source requirements.* Each replaceable light source must be designed to conform to the dimensions and electrical specifications furnished with respect to it pursuant to part 564 of this chapter, on file in Docket No. NHTSA 98–3397, and must conform to the following requirements:

S11.1 *Markings.* If other than an HB Type, the light source must be marked with the bulb marking designation specified for it in compliance with Appendix A or Appendix B of part 564 of this chapter. The base of each HB Type must be marked with its HB Type designation. Each replaceable light source must also be marked with the symbol DOT and with a name or trademark in accordance with S6.5.

S11.2 *Ballast markings.* If a ballast is required for operation, each ballast must bear the following permanent markings:

(a) Name or logo of ballast manufacturer;

(b) Ballast part number or unique identification;

(c) Part number or other unique identification of the light source for which the ballast is designed;

(d) Rated laboratory life of the light source/ballast combination, if the information for the light source has been filed in Appendix B of part 564 of this chapter;

(e) A warning that ballast output voltage presents the potential for severe electrical shock that could lead to permanent injury or death;

(f) Ballast output power in watts and output voltage in rms volts AC or DC; and

(g) The symbol 'DOT'.

S11.3 *Gas discharge laboratory life.* For light sources that use excited gas mixtures as a filament or discharge arc, the ''rated laboratory life'' is determined in accordance with sections 4.3 and 4.9 of SAE Recommended Practice J2009 FEB93, Forward Discharge Lighting Systems (incorporated by reference, see 571.108 S5.2 of this title).

S11.4 *Physical tests.*

S11.4.1 Each replaceable light source must be designed to conform with the performance requirements of the deflection test and pressure test requirements of S14.7.

S11.4.2 Replaceable light sources must be designed to conform with the requirements of section VII of Appendix A of part 564 of this chapter, or section IV of Appendix B of part 564 of this chapter, for maximum power and luminous flux when test by the procedure of S14.7.3.

S12 *Headlamp concealment device requirements.*

S12.1 While the headlamp is illuminated, its fully opened headlamp concealment device must remain fully opened should any loss of power to or within the headlamp concealment device occur.

S12.2 Whenever any malfunction occurs in a component that controls or conducts power for the actuation of the concealment device, each closed headlamp concealment device must be capable of being fully opened by a means not requiring the use of any tools. Thereafter, the headlamp concealment device must remain fully opened until intentionally closed.

S12.3 Except for malfunctions covered by S12.2, each headlamp concealment device must be capable of being fully opened and the headlamps illuminated by actuation of a single switch, lever, or similar mechanism, including a mechanism that is automatically actuated by a change in ambient light conditions.

S12.4 Each headlamp concealment device must be installed so that the headlamp may be mounted, aimed, and adjusted without removing any component of the device, other than components of the headlamp assembly.

S12.5 Except for cases of malfunction covered by S12.2, each headlamp concealment device must, within an ambient temperature range of −20 °F to +120 °F, be capable of being fully opened in not more than 3 seconds after the actuation of a driver-operated control.

S12.6 As an alternative to complying with the requirements of S12.1 through S12.5, a vehicle with headlamps incorporating VHAD or visual/optical aiming in accordance with this standard may meet the requirements for *Concealable lamps* in paragraph 5.14 of the following version of the Economic Commission for Europe Regulation 48 ''Uniform Provisions Concerning the Approval of Vehicles With Regard to the Installation of Lighting and Light-Signaling Devices'': E/ECE/324–E/ECE/TRANS/505, Rev.1/Add.47/Rev.1/Corr.2, 26 February 1996 (page 17) (incorporated by reference, see 571.108 S5.2 of this title), in the English language version.

S12.7 *Certification election.* Manufacturers of vehicles with headlamps incorporating VHAD or visual/optical aiming must elect to certify to S12.1 through S12.5 or to S12.6 prior to, or at the time of certification of the vehicle, pursuant to 49 CFR Part 567. The selection is irrevocable.

S13 *Replaceable headlamp lens requirements.*

S13.1 A replacement lens for a replaceable bulb headlamp or integral beam headlamp that is not required to have a bonded lens must be provided with a replacement seal in a package that includes instructions for the removal and replacement of the lens, the cleaning of the reflector, and the sealing of the replacement lens to the reflector assembly.

S13.2 Each replacement headlamp lens with seal, when installed according to the lens manufacturer's instructions on an integral beam or replaceable bulb headlamp, must not cause the headlamp to fail to comply with any of the requirements of this standard.

S13.3 Each replacement headlamp lens must be marked with the symbol ''DOT'' either horizontally or vertically, to constitute certification. Each replacement headlamp lens must also be

marked with manufacturer and the part or trade number of the headlamp for which it is intended, and with the name and/or trademark of the lens manufacturer or importer that is registered with the U.S. Patent and Trademark Office. Nothing in this standard authorizes the marking of any such name and/or trademark by one who is not the owner, unless the owner has consented to it.

S14 *Physical and photometry test procedures and performance requirements.*

S14.1 *General test procedures and performance requirements.*

S14.1.1 Each lamp, reflective device, item of conspicuity treatment, and item of associated equipment required or permitted by this standard must be designed to conform to all applicable physical test performance requirements specified for it.

S14.1.2 *Plastic optical materials.* All plastic materials used for optical parts such as lenses and reflectors on lamps or reflective devices required or allowed by this standard must conform to the material test requirements of S14.4.2.

S14.1.3 All coatings used on optical materials must have added to their formulations an optical brightener, whose presence is detectable by ultraviolet light, to aid in testing for their presence. Other equivalent industry accepted methods may be used as an alternative.

S14.1.4 *Samples.*

S14.1.4.1 Samples submitted for laboratory test must be new, unused, manufactured from production tooling and assembled by production processes, and representative of the devices as regularly manufactured and marketed.

S14.1.4.2 Each test sample must include not only the device but also accessory equipment necessary to operate in its intended manner. Where necessary a mounting bracket shall be provided so that the device may be rigidly bolted in its operating position on the various test equipment.

S14.1.4.3 Dust and photometric tests may be made on a second set of mounted samples, if desired, to expedite completion of the tests.

S14.1.5 *Laboratory facilities.* The laboratory must be equipped to test the sample in accordance with the requirements of the specific device.

S14.2 *Photometric test procedures.* Each lamp and reflective device required or permitted by this standard must be designed to conform to the applicable photometric requirements.

S14.2.1 *Photometry measurements for all lamps except license plate lamps, headlamps, and DRLs.*

S14.2.1.1 *Mounting.* Photometry measurements are made with the sample lamp mounted in its normal operating position.

S14.2.1.2 *School bus signal lamp aiming.* A school bus signal lamp must be aimed with its aiming plane normal to the photometer axis and may be reaimed for photometry by ± ½° vertically and ± 1° horizontally.

S14.2.1.3 *Measurement distance.* Photometric measurements are made at a distance between the light source and the point of measurement of at least 1.2 m for side marker lamps, clearance lamps, identification lamps, and parking lamps, and at least 3 m for turn signal lamps, stop lamps, taillamps, backup lamps, and school bus signal lamps.

S14.2.1.4 *Location of test points.* Test point location must comply with the following nomenclature:

(a) The line formed by the intersection of a vertical plane through the light source of the lamp and normal to the test screen is designated ''V''.

(b) The line formed by the intersection of a horizontal plane through the light source and normal to the test screen is designated ''H''.

(c) The point of intersection of these two lines is designated ''H-V''.

(d) Other test points on the test screen are measured in terms of angles from the H and V lines.

(e) Angles to the right (R) and to the left (L) are regarded as being to the right and left of the V line when the observer stands behind the lamp and looks in the direction of its light beam when it is properly aimed for photometry. Similarly, the upward angles designated as U and the downward angles designated as D, refer to light directed at angles above and below the H line, respectively.

S14.2.1.5 *Multiple compartment and multiple lamp photometry of turn signal lamps, stop lamps, and taillamps.*

S14.2.1.5.1 When compartments of lamps or arrangements of multiple lamps are photometered together, the H–V axis intersects the midpoint between the optical axes.

S14.2.1.5.2 Luminous intensity measurements of multiple compartment lamp or multiple lamp arrangements are made either by:

(a) Measuring all compartments together, provided that a line from the optical axis of each compartment or lamp to the center of the photometer sensing device does not make an angle more than 0.6° with the H–V axis, or

(b) Measuring each compartment or lamp separately by aligning its optical axis with the photometer and adding the value at each test point.

S14.2.1.5.3 Multiple compartment turn signal lamps or stop lamps or multiple lamp arrangements of these lamps installed on multipurpose passenger vehicles, trucks, trailers, or buses 2032 mm or more in overall width must use the method of S14.2.1.5.2(b) only.

S14.2.1.6 *Bulbs.* Except for a lamp having a sealed-in bulb, a lamp must meet the applicable requirements of this standard when tested with a bulb whose filament is positioned within ± .010 in of the nominal design position specified in SAE J573d, *Lamp Bulbs and Sealed Units,* December 1968, (incorporated by reference, see 571.108 S5.2 of this title) or specified by the bulb manufacturer and operated at the bulb's rated mean spherical candela.

S14.2.1.6.1 Each lamp designed to use a type of bulb that has not been assigned a mean spherical candela rating by its manufacturer and is not listed in SAE J573d, *Lamp Bulbs and Sealed Units,* December 1968 (incorporated by reference, see 571.108 S5.2 of this title), must meet the applicable requirements of this standard when used with any bulb of the type specified by the lamp manufacturer, operated at the bulb's design voltage. A lamp that contains a sealed-in bulb must meet these requirements with the bulb operated at the bulb's design voltage.

S14.2.1.6.2 A bulb that is not listed in SAE J573d, *Lamp Bulbs and Sealed Units,* December 1968, (incorporated by reference, see 571.108 S5.2 of this title) is not required to use a socket that conforms to the requirements of SAE J567b, *Bulb Sockets,* April 1964 (incorporated by reference, see 571.108 S5.2 of this title).

S14.2.2 *License plate lamp photometry.* Photometry compliance of license plate lamps is determined by measurement of the illumination falling upon test stations located on a test plate.

S14.2.2.1 *Illumination surface.* All illumination measurements are made on a rectangular test plate of clean, white blotting paper mounted on the license plate holder in the position normally taken by the license plate. The face of the test plate must be 1.5 mm from the face of the license plate holder.

S14.2.2.2 *Test stations.* Test stations must be located on the face of the test plate as shown in Figure 19 according to the type of vehicle on which the license plate lamps are installed.

S14.2.2.3 Bulb requirements of S14.2.1.6 apply to license plate lamp photometry.

S14.2.3 *Reflex reflector and retroreflective sheeting photometry.*

S14.2.3.1 *Mounting.* Each reflex reflector is mounted for photometry

with the center of the reflex area at the center of goniometer rotation and at the same horizontal level as the source of illumination.

S14.2.3.2 *Illumination source.* The source of illumination is a lamp with a 50 mm effective diameter and with a filament operating at 2856 °K.

S14.2.3.3 *Measurement distance.* The test distance is 30.5 m [100ft].

S14.2.3.4 *Test setup* The observation point is located directly above the source of illumination. The H–V axis of reflex reflectors is taken as parallel to the longitudinal axis of the vehicle for rear reflectors and perpendicular to a vertical plane passing through the longitudinal axis of the vehicle for side reflectors.

S14.2.3.5 *Photodetector.* The photodetector has an opening of not more than 13 mm vertically and 25 mm horizontally.

S14.2.3.6 *Photometry surface.* Reflex reflectors may have any linear or area dimensions but must have no more than 7740 sq mm projected area contained within a 254 mm diameter circle exposed for photometry.

S14.2.3.7 *Procedure.* Photometric measurements of reflex reflectors and retroreflective sheeting must be made at various observation and entrance angles as shown in Table XVI.

S14.2.3.7.1 The observation angle is the angle formed by a line from the observation point to the center of the reflector and a second line from the center of the reflector to the source of illumination.

S14.2.3.7.2 The entrance angle is the angle between the axis of the reflex reflector and a line from the center of the reflector to the source of illumination.

S14.2.3.7.3 The entrance angle is designated left, right, up, and down in accordance with the position of the source of illumination with respect to the axis of the reflex reflector as viewed from behind the reflector.

S14.2.3.7.4 Measurements are made of the luminous intensity which the reflex reflector is projecting toward the observation point and the illumination on the reflex reflector from the source of illumination.

S14.2.3.8 *Measurements.*

S14.2.3.8.1 *Reflex reflectors.* The required measurement for reflex reflectors at each test point as shown in Table XVI is the quotient of the projected luminous intensity divided by the illumination expressed as millicandela per lux or candela per footcandle.

S14.2.3.8.2 *Retroreflective sheeting.* The required measurement for retroreflective sheeting reflectors at each test point as shown in Table XVI is candela per lux per square meter of area.

S14.2.3.8.3 *Reflex reflector photometry measurement adjustments.*

S14.2.3.8.3.1 Reflex reflectors, which do not have a fixed rotational position on the vehicle, are rotated about their axis through 360° to find the minimum photometric value which must be reported for each test point. If the output falls below the minimum requirement at any test point, the reflector is rotated ±5° about its axis from the angle where the minimum output occurred, and the maximum value within this angle is reported as a tolerance value.

S14.2.3.8.3.2 Reflex reflectors, which by their design or construction, permit mounting on a vehicle in a fixed rotational position, are tested in this position. A visual locator, such as the word TOP is not considered adequate to establish a fixed rotational position on the vehicle.

S14.2.3.8.3.3 If uncolored reflections from the front surface interfere with photometric readings at any test point, additional readings are taken 1° above, below, right, and left of the test point, and the lowest of these readings and its location is reported provided the minimum test point requirement for the test point is met.

S14.2.4 *Daytime running lamp (DRL) photometry measurements.*

S14.2.4.1 Each DRL is tested to the procedure of S14.2.5 when a test voltage of 12.8 v ± 20 mv is applied to the input terminals of the lamp switch module or voltage-reducing equipment, whichever is closer to the electrical source on the vehicle.

S14.2.4.2 The test distance from the lamp to the photometer is not less than 18.3 m if the lamp is optically combined with a headlamp, or is a separate lamp, and not less than 3 m if the lamp is optically combined with a lamp, other than a headlamp, that is required by this standard.

S14.2.4.3 Bulb requirements of S14.2.1.6 apply to DRL photometry.

S14.2.5 *Headlamp photometry measurements.*

S14.2.5.1 *Mounting.* Photometry measurements at the applicable test points are made with the sample headlamp mounted in its normal operating position.

S14.2.5.2 Test points in the area from 10° U to 90° U must be measured from the normally exposed surface of the lens face.

S14.2.5.3 *Measurement distance.* Photometric measurements are made at a distance between the light source and the photometer sensor of at least 18.3 m.

S14.2.5.4 *Seasoning and test voltage.* All sealed beam headlamps, integral beam headlamps, beam contributors, and replaceable light sources are seasoned at design voltage for 1% of its average design life or 10 hours, whichever is less prior to a photometry test. A headlamp is tested at 12.8 v. ± 20 mv, D.C. as measured at the terminals of the lamp.

S14.2.5.5 *Aiming.* Each headlamp is aimed prior to a photometry test in accordance with the procedure appropriate to its aiming system. A ¼° reaim is permitted in any direction at any test point to allow for variations in readings between laboratories for all headlamps except a Type F upper beam unit not equipped with a VHAD.

S14.2.5.5.1 *Mechanically aimable headlamps using an external aimer.* The headlamp is aimed mechanically with the aiming plane at the design angle(s) to the photometer axis and the mechanical axis of the headlamp on the photometer axis.

S14.2.5.5.2 *Mechanically aimable headlamps equipped with a VHAD.* The headlamp is aimed mechanically using the VHAD in accordance with the manufacturer's instructions as provided with the vehicle on which the headlamp is intended to be used.

S14.2.5.5.3 *Visually aimable lower beam headlamps-vertical aim.*

S14.2.5.5.3.1 A VOL cutoff headlamp must have the location of the cutoff maximum gradient, as determined by the method of this standard, positioned at 0.4° down from the H–H line.

S14.2.5.5.3.2 A VOR cutoff headlamp must have the location of the cutoff maximum gradient, as determined by the method of this standard, positioned at the H–H line.

S14.2.5.5.4 *Visually aimable lower beam headlamps-horizontal aim.* There must be no adjustment of horizontal aim unless the headlamp is equipped with a horizontal VHAD. If the headlamp has a VHAD, it must be set to zero.

S14.2.5.5.5 *Visually aimable upper beam headlamps-vertical aim.*

S14.2.5.5.5.1 A headlamp whose upper beam is combined with a lower beam must not have its vertical aim changed from that set for the lower beam.

S14.2.5.5.5.2 A headlamp whose upper beam is not combined with a lower beam must have its maximum beam intensity positioned on the H–H axis.

S14.2.5.5.6 *Visually aimable upper beam headlamps-horizontal aim.*

S14.2.5.5.6.1 A headlamp whose upper beam is combined with a lower beam must not have its horizontal aim

changed from that set for the lower beam.

S14.2.5.5.6.2 A headlamp whose upper beam is not combined with a lower beam and has a fixed horizontal aim or has a horizontal VHAD must be mounted in its normal operating position on a goniometer such that the mounting fixture alignment axes are coincident with the goniometer axes and must be energized at 12.8 v ± 20 mv. There must be no adjustment, shimming, or modification of the horizontal axis of the headlamp or test fixture, unless the headlamp is equipped with a VHAD, in which case the VHAD must be adjusted to zero.

S14.2.5.5.6.3 A headlamp whose upper beam is not combined with a lower beam and is not equipped with a horizontal VHAD, the horizontal aim must be adjusted so that the maximum beam intensity is positioned on the V–V axis.

S14.2.5.5.7 *Simultaneous aim Type F sealed beam headlamps and beam contributor integral beam headlamps.*

S14.2.5.5.7.1 A headlamp system permitted to use simultaneous aim of lower beams and upper beams must be aimed mechanically for lower beam photometry by centering the lower beam unit or the geometric center of all lower beam contributors on the photometer axis and aligning the aiming plane, aiming reference plane, or other appropriate vertical plane defined by the manufacturer perpendicular to the photometer axis.

S14.2.5.5.7.2 The headlamp must be aimed for upper beam photometry by moving the assembly in a plane parallel to the established lower beam aiming plane until the upper beam unit or the geometric center of all upper beam contributors is centered in the photometric axis.

S14.2.5.5.8 *Motorcycle headlamp-upper beam headlamps designed to comply with Table XX.* The upper beam of a multiple beam headlamp designed to comply with the requirements of Table XX must be aimed photoelectrically so that the center of the zone of highest intensity falls 0.4° vertically below the lamp axis and is centered laterally. The center of the zone of highest intensity must be established by the intersection of a horizontal plane passing through the point of maximum intensity, and the vertical plane established by balancing the photometric values at 3°L and 3°R.

S14.2.5.5.9 *Motorcycle headlamp-lower beam headlamps designed to comply with Table XX.* The beam from a single beam headlamp designed to comply with the requirements of Table XX must be aimed straight ahead with the top of the beam aimed vertically to obtain 2000 cd at H–V.

S14.2.5.6 *Positioner.* The goniometer configuration, used to position the sample headlamp when making photometric measurements at specific angular test points, is horizontal rotation over elevation. The vertical axis of the goniometer must correspond to the design position vertical axis of the sample headlamp which is vertical and perpendicular to the longitudinal axis of the vehicle.

S14.2.5.7 *Photometer.*

S14.2.5.7.1 The photometer must be capable of measuring the luminous intensity of the sample headlamp throughout its illumination range.

S14.2.5.7.2 *Sensor.*

S14.2.5.7.2.1 The maximum effective area of the photometric sensor must fit within a circle whose diameter is equal to 0.009 times the actual test distance from the light source of the sample headlamp to the sensor.

S14.2.5.7.2.2 The sensor effective area is defined as the actual area of intercepted light striking the detector surface of the photometer. Sensor systems incorporating lens(es) that change the diameter of the intercepted light beam before it reaches the actual detector surface, the maximum size requirements must apply to the total area of the light actually intercepted by the lens surface.

S14.2.5.7.2.3 The sensor must be capable of intercepting all direct illumination from the largest illuminated dimension of the sample lamp at the test distance.

S14.2.5.7.3 The color response of the photometer must be corrected to that of the 1931 International Commission on Illumination (C.I.E.) Standard Observer (2-degree) Photopic Response Curve, as shown in the *C.I.E. 1931 Chromaticity Diagram* (incorporated by reference, see 571.108 S5.2 of this title).

S14.2.5.8 *Location of test points.*

S14.2.5.8.1 Test point positions are defined by the positioner. The following nomenclature applies:

S14.2.5.8.1.1 The letters ''V'' and ''H'' designate the vertical and horizontal planes intersecting both the headlamp light source and the photometer axis. ''H–V'' designates the zero test point angle at the intersection of the H and V planes. This intersection is parallel to the longitudinal axis of the vehicle.

S14.2.5.8.1.2 The letters ''U'', ''D'', ''L'', and ''R'', indicating up, down, left and right, respectively, designate the angular position from the H and V planes to the photometer as viewed from the headlamp.

S14.2.5.8.1.3 Horizontal angles designated L and R are defined as the plan view angle between the vertical plane and the projection of the light ray from the headlamp onto the horizontal plane.

S14.2.5.8.1.4 Vertical angles designated U and D are defined as the true angle between the horizontal plane and the light ray from the headlamp.

S14.2.5.9 *Beam contributor photometry measurements.* In a headlighting system where there is more than one beam contributor providing a lower beam, and/or more than one beam contributor providing an upper beam, each beam contributor must be designed to meet only the applicable photometric performance requirements based upon the following mathematical expression: conforming test point value = 2(test point value)/total number of lower or upper beam contributors for the vehicle, as appropriate.

S14.2.5.10 *Moveable reflector aimed headlamp photometry measurements.*

S14.2.5.10.1 A headlamp aimed by moving the reflector relative to the lens and headlamp housing, or vice versa, must conform to the photometry requirements applicable to it with the lens at any position relative to the reflector.

S14.2.5.10.2 These positions include not less than the full range of vertical pitch of the vehicle on which the headlamp is installed and not less than ± 2.5° from the nominal horizontal aim position for the vehicle on which the headlamp is installed unless the headlamp is visually/optically aimed with a fixed horizontal aim.

S14.3 *Motorcycle headlamp out of focus test procedure and performance requirements.*

S14.3.1 *Procedure.* The sample device must be tested for photometry using bulbs having each of four out-of-focus filament positions. Where conventional bulbs with two pin bayonet bases are used, tests must be made with the light source 0.060 in above, below, ahead, and behind the designated position. If prefocused bulbs are used, the limiting positions at which tests are made must be 0.020 in above, below, ahead, and behind the designated position. The sample device may be re-aimed for each of the out-of-focus positions of the light source.

S14.3.2 *Performance requirements.* The minimum photometric values for the out-of-design position must be 80% of the in-design position.

S14.4 *General test procedures and performance requirements.*

S14.4.1 *Color test.* The requirement applies to the overall effective color of light emitted by the device and not to

the color of the light from a small area of the lens. It does not apply to any pilot, indicator, or tell-tale lights. The color of the sample device must comply when tested by either the Visual Method or the Tristimulus Method.

S14.4.1.1 *Samples.* A test sample for a reflex reflector may be either the reflex reflector or a disc of the same material, technique of fabrication, and dye formulation as the reflex reflector. If a disc is used, the thickness must be twice the thickness of the reflector as measured from the face of the lens to the apexes of the reflecting elements.

S14.4.1.2 *General procedure.*

S14.4.1.2.1 The device must be operated at design voltage.

S14.4.1.2.2 Components (bulbs, caps, lenses, and the like) must be tested in a fixture or manner simulating the intended application.

S14.4.1.2.3 The lamp shall be allowed to reach operating temperature before measurements are made.

S14.4.1.2.4 The entire light emitting surface of the sample must be visible from any point on the entrance window of the test instrument.

S14.4.1.2.5 The distance between the test instrument and the sample must be large enough so that further increases in distance will not affect the results.

S14.4.1.3 *Visual method.*

S14.4.1.3.1 *Visual method procedure.* The color of light from the sample device must be compared visually with the color of the light from a standard. The standard may consist of a filter or limit glass. In the case of white, CIE Source A is used only as a color reference. The chromaticity coordinates of the color standards must be as close as possible to the limits listed. The color of the standard filters is determined spectro-photometrically.

S14.4.1.3.2 *Visual method performance requirements.* The color must comply with the applicable requirement.

S14.4.1.3.2.1 *Red.* Red is not acceptable if it is less saturated (paler), yellower, or bluer than the limit standards.

S14.4.1.3.2.2 *Yellow (Amber).* Yellow is not acceptable if it is less saturated (paler), greener, or redder than the limit standards.

S14.4.1.3.2.3 *White.* White is not acceptable if its color differs materially from that of CIE Source A.

S14.4.1.4 *Tristimulus method.*

S14.4.1.4.1 *Tristimulus method procedure.*

S14.4.1.4.1.1 The color of light from the H–V point of a sample device must be measured by photoelectric receivers with spectral responses that approximate CIE standard spectral tristimulus valves.

S14.4.1.4.1.2 A sphere may be used to integrate light from a colored source provided that the color shift that results from the spectral selectivity of the sphere paint be corrected by the use of a filter, correction factor, or an appropriate calibration.

S14.4.1.4.1.3 Where the sample device does not have uniform spectral characteristics in all useful directions, color measurements must be made at as many directions of view as are required to evaluate the color for those directions that apply to the end use of the device.

S14.4.1.4.2 *Tristimulus method performance requirements.* The color must comply with the applicable requirement.

S14.4.1.4.2.1 *Red.* The color of light emitted must fall within the following boundaries:

$y = 0.33$ (yellow boundary)
$y = 0.98 - x$ (purple boundary)

S14.4.1.4.2.2 *Yellow (Amber).* The color of light emitted must fall within the following boundaries:

$y = 0.39$ (red boundary)
$y = 0.79 - 0.67x$ (white boundary)
$y = x - 0.12$ (green boundary)

S14.4.1.4.2.3 *White (achromatic).* The color of light emitted must fall within the following boundaries:

$x = 0.31$ (blue boundary)
$y = 0.44$ (green boundary)
$x = 0.50$ (yellow boundary)
$y = 0.15 + 0.64x$ (green boundary)
$y = 0.38$ (red boundary)
$y = 0.05 + 0.75x$ (purple boundary)

S14.4.2 *Plastic optical materials tests.* Accelerated weathering procedures are not permitted.

S14.4.2.1 *Samples.*

S14.4.2.1.1 Samples of materials shall be injection molded into polished metal molds to produce test specimens with two flat and parallel faces. Alternative techniques may be used to produce equivalent specimens.

S14.4.2.1.2 Test specimens shape may vary, but each exposed surface must contain a minimum uninterrupted area of 32 sq cm.

S14.4.2.1.3 Samples must be furnished in thicknesses of 1.6 ± 0.25 mm, 2.3 ± 0.25 mm, 3.2 ± 0.25 mm, and 6.4 ± 0.25 mm.

S14.4.2.1.4 All samples must conform to the applicable color test requirement of this standard prior to testing.

S14.4.2.1.5 A control sample, kept properly protected from influences which may change its appearance and properties of each thickness, must be retained.

S14.4.2.2 *Outdoor exposure test.*

S14.4.2.2.1 Outdoor exposure tests of 3 years in duration must be made on samples of all materials, including coated and uncoated versions, used for optical parts of devices covered by this standard. Tests are to be conducted in Florida and Arizona.

S14.4.2.2.2 Concentrations of polymer components and additives used in plastic materials may be changed without outdoor exposure testing provided the changes are within the limits of composition represented by higher and lower concentrations of these polymer components and additives previously tested to this section and found to meet its requirements.

S14.4.2.2.3 *Procedure.*

S14.4.2.2.3.1 One sample of each thickness of each material must be mounted at each exposure site so that at least a minimum uninterrupted area of 32 sq cm of the exposed upper surface of the sample is at an angle of 45° to the horizontal facing south. The sample must be mounted in the open no closer than 30 cm (11.8 in) to its background.

S14.4.2.2.3.2 During the exposure time the samples must be cleaned once every three months by washing with mild soap or detergent and water, and then rinsing with distilled water. Rubbing must be avoided.

S14.4.2.2.4 *Performance requirements.* Plastic lenses, other than those incorporating reflex reflectors, used for inner lenses or those covered by another material and not exposed directly to sunlight must meet the optical material test requirements when covered by the outer lens or other material.

S14.4.2.2.4.1 After completion of the outdoor exposure test the haze and loss of surface luster as measured by ASTM 1003–92, *Haze and Luminous Transmittance of Transparent Plastic,* (incorporated by reference, see 571.108 S5.2 of this title) must not be greater than:

(a) 30% for materials used for outer lenses, other than those incorporating reflex reflectors;

(b) 7% for materials used for reflex reflectors and lenses used in front of reflex reflectors.

S14.4.2.2.4.2 After completion of the outdoor exposure test materials used for headlamp lenses must show no deterioration.

S14.4.2.2.4.3 After completion of the outdoor exposure test all materials, when compared with the unexposed control samples, must not show physical changes affecting performance such as color bleeding, delamination, crazing, or cracking. Additionally materials used for reflex reflectors and lenses used in front of reflex reflectors

must not show surface deterioration or dimensional changes.

S14.4.2.2.4.4 After completion of the outdoor exposure test all materials, when compared with the unexposed control samples, must not have their luminous transmittance changed by more than 25% when tested in accordance with ASTM E 308–66 (1973), *Spectrophotmetry and Description of Color in CIE 1931 System* (incorporated by reference, see 571.108 S5.2 of this title) using CIE Illuminant A (2856K).

S14.4.2.2.4.5 After completion of the outdoor exposure test all materials must conform to the color test of this standard in the range of thickness stated by the material manufacturer.

S14.4.2.3 *Heat test.*

S14.4.2.3.1 *Procedure.* Two samples of each thickness of each material must be supported at the bottom, with at least 51 mm of the sample above the support, in the vertical position in such a manner that, on each side, the minimum uninterrupted area of exposed surface is not less than 3225 sq mm. The samples are placed in a circulating air oven at 79 ± 3 °C for two hours.

S14.4.2.3.2 *Performance requirements.* After completion of the heat exposure and cooling to room ambient temperature, a test specimen must show no change in shape and general appearance discernable to the naked eye when compared with an unexposed specimen and continue to conform to the applicable color test requirement of this standard.

S14.5 *Signal lamp and reflective device physical test procedures and performance requirements.*

S14.5.1 *Vibration test.*

S14.5.1.1 *Procedure.* The sample device, as mounted on the support supplied, must be bolted to the anvil end of the table of the vibration test machine of Figure 21 and vibrated approximately 750 cpm through a distance of ⅛ in. The table must be spring mounted at one end and fitted with steel calks on the underside of the other end. The calks are to make contact with the steel anvil once during each cycle at the completion of the fall. The rack must be operated under a spring tension of 60 to 70 lb. The test must be continued for 1 hour.

S14.5.1.2 *Performance requirements.* After completion of the vibration test a device showing evidence of material physical weakness, lens or reflector rotation, displacement or rupture of parts except bulb failures, must be considered to have failed, providing that the rotation of lens or reflector must not be considered as a failure when tests show compliance with specifications despite such rotation.

S14.5.2 *Moisture test.*

S14.5.2.1 *Procedure.* The sample device must be mounted in its normal operating position with all drain holes open and subjected to a precipitation of 0.1 in of water per minute, delivered at an angle of 45° from a nozzle with a solid cone spray. During the test the device must revolve about its vertical axis at a rate of 4 rpm for a period of 12 hours followed by a one hour drain period where the device does not rotate and the spray stops. After completion of the moisture test the device must be examined for moisture accumulation.

S14.5.2.2 *Performance requirements.* Accumulation of moisture in excess of 2 cc or any visible moisture in a sealed reflex unit must constitute a failure.

S14.5.3 *Dust test.*

S14.5.3.1 *Samples.* A sealed unit is not required to meet the requirements of this test.

S14.5.3.2 *Procedure.* The sample device with any drain hole closed must be mounted in its normal operating position, at least 6 in from the wall in a cubical box with inside measurements of 3 ft on each side containing 10 lb of fine powered cement in accordance with ASTM C 150–56, *Standard Specification for Portland Cement* (incorporated by reference, see 571.108 S5.2 of this title). At intervals of 15 minutes during a test period of 5 hours, the dust must be agitated by compressed air or fan blower by projecting blasts of air for a 2 second period in a downward direction into the dust in such a way that the dust is completely and uniformly diffused throughout the entire cube and allowed to settle. After the completion of the dust test the exterior surface of the device must be cleaned.

S14.5.3.3 *Performance requirements.* If after a photometry test the maximum photometric intensity of the device is not more than 10% less than the maximum photometric intensity of the same device after being cleaned both inside and outside, the device is considered to have met the requirements of the dust test.

S14.5.4 *Corrosion test.*

S14.5.4.1 *Procedure.* The sample device must be subjected to a salt spray (fog) test in accordance with the latest version of ASTM B117–73, *Method of Salt Spray (Fog) Testing* (incorporated by reference, see 571.108 S5.2 of this title), for a period of 50 hours, consisting of two periods of 24 hour exposure followed by a 1 hr drying time.

S14.5.4.2 *Performance requirements.* After the completion of the corrosion test there must be no evidence of excessive corrosion which would affect the proper function of the device.

S14.6 *Headlamp physical test procedures and performance requirements.*

S14.6.1 *Abrasion test.*

S14.6.1.1 *Procedure.*

S14.6.1.1.1 *Abrading pad.* A new, unused abrading pad constructed of 0000 steel wool not less than 2.5 ± .1 cm wide, rubber cemented to a rigid base shaped to the same vertical contour of the lens, is used for each test. The abrading pad support is equal in size to the pad and the center of the support surface is within ± 2 mm of parallel to the lens surface. The ''grain'' of the pad is oriented perpendicular to the direction of motion. The density of the pad is such that when the pad is resting unweighted on the lens, the base of the pad is no closer than 3.2 mm to the lens at its closest point.

S14.6.1.1.2 *Abrading pad alignment.* A sample headlamp is mounted in the abrasion test fixture of Figure 5 with the lens facing upward. When mounted on its support and resting on the lens of the test headlamp, the abrading pad is then weighted such that a pad pressure of 14 ± 1 KPa. exists at the center and perpendicular to the face of the lens.

S14.6.1.1.3 *Abrasion test procedure.* The pad is cycled back and forth (1 cycle) for 11 cycles at 4 ± 0.8 in (10 ± 2 cm) per second over at least 80% of the lens surface, including all the area between the upper and lower aiming pads, but not including lens trim rings and edges. A pivot must be used if it is required to follow the contour of the lens.

S14.6.1.2 *Performance requirements.* After completion of the abrasion test the sample headlamp must meet the requirements of the applicable photometry tests of Table XIX and Table XVIII. A ¼° reaim is permitted in any direction at any test point.

S14.6.2 *Chemical resistance test.*

S14.6.2.1 *Procedure.*

S14.6.2.1.1 *Test fluids.* The five test fluids used in the chemical resistance test include:

(a) ASTM Reference Fuel C, which is composed of Isooctane 50% volume and Toluene 50% volume. Isooctane must conform to A2.7 in Annex 2 of the Motor Fuels Section of the 1985 Annual Book of ASTM Standards, Vol. 05.04 (incorporated by reference, see 571.108 S5.2 of this title), and Toluene must conform to ASTM specification D362–84, *Standard Specification for Industrial Grade Toluene* (incorporated by reference, see 571.108 S5.2 of this title). ASTM Reference Fuel C must be used as specified in: Paragraph A2.3.2 and A2.3.3 of Annex 2 to Motor Fuels;

Section 1 in the 1985 Annual Book of ASTM Standards, Vol. 05.04 (incorporated by reference, see 571.108 S5.2 of this title); and OSHA Standard 29 CFR 1910.106—Handling Storage and Use of Flammable Combustible Liquids;

(b) Tar remover (consisting by volume of 45% xylene and 55% petroleum base mineral spirits);

(c) Power steering fluid (as specified by the vehicle manufacturer for use in the motor vehicle on which the headlamp is intended to be installed);

(d) Windshield washer fluid consisting of 0.5% monoethanolamine with the remainder 50% concentration of methanol/distilled water by volume; and

(e) Antifreeze (50% concentration of ethylene glycol/distilled water by volume).

S14.6.2.1.2 *Fluid application.* The entire exterior lens surface of the sample headlamp mounted in the headlamp test fixture and top surface of the lens-reflector joint is wiped once to the left and once to the right with a 6 inch square soft cotton cloth (with pressure equally applied) which has been saturated once in a container with 2 ounces of five different test fluids listed above. The lamp is wiped within 5 seconds after removal of the cloth from the test fluid. A new lamp sample may be used with each fluid.

S14.6.2.1.3 *Test duration.* After the headlamp sample has been wiped with the test fluid, it must be stored in its designed operating attitude for 48 hours at a temperature of 23°C ± 4°C and a relative humidity of 30% ± 10%. At the end of the 48-hour period, the headlamp is wiped clean with a soft dry cotton cloth and visually inspected.

S14.6.2.2 *Performance requirements.* After completion of the chemical resistance test, the sample headlamp must have no surface deterioration, coating delamination, fractures, deterioration of bonding or sealing materials, color bleeding, or color pickup visible without magnification and the headlamp must meet the requirements of the applicable photometry tests of Table XIX and Table XVIII. A ¼° reaim is permitted in any direction at any test point.

S14.6.3 *Corrosion test.*

S14.6.3.1 *Procedure.* A sample headlamp, mounted on a headlamp test fixture in designed operating position and including all accessory equipment necessary to operate in its normal manner, is subjected to a salt spray (fog) test in accordance with ASTM B117–73, *Method of Salt Spray (Fog) Testing* (incorporated by reference, see 571.108 S5.2 of this title), for 50 total hours, consisting of two periods of 24 hours exposure followed by a 1 hour drying period. If a portion of the device is completely protected in service, that portion is covered to prevent salt fog entry during exposure. After removal from the salt spray and the final 1 hour drying period the sample headlamp is examined for corrosion that affect any other applicable tests contained in S14.6. If such corrosion is found, the affected test(s) must be performed on the corrosion sample and the results recorded.

S14.6.3.2 *Performance requirements.* After completion of the corrosion test, the sample headlamp must not have any observed corrosion which would result in the failure of any other applicable tests contained in S14.6 and no corrosion of the headlamp mounting and aiming mechanism that would result in the failure of the aiming adjustment tests, inward force test, or torque deflection test of S14.6.

S14.6.4 *Corrosion-connector test.*

S14.6.4.1 *Procedure.*

S14.6.4.1.1 A headlamp connector test must be performed on each filament circuit of the sample headlamp prior to the test in S14.6.4.1.2 according to Figure 4 and S14.6.15. The power source is set to provide 12.8 volts and the resistance must be set to produce 10 amperes.

S14.6.4.1.2 The headlamp, with connector attached to the terminals, unfixtured and in its designed operating attitude with all drain holes, breathing devices or other designed openings in their normal operating positions, is subjected to a salt spray (fog) test in accordance with ASTM B117–73, *Method of Salt Spray (Fog) Testing* (incorporated by reference, see 571.108 S5.2 of this title), for 240 hours, consisting of ten successive 24-hour periods.

S14.6.4.1.3 During each period, the headlamp is mounted in the middle of the chamber and exposed for 23 hours to the salt spray. The spray is not activated during the 24th hour. The bulb is removed from the headlamp and from the test chamber during the one hour of salt spray deactivation and reinserted for the start of the next test period, at the end of the first and last three 23-hour periods of salt spray exposure, and at the end of any two of the fourth through seventh 23-hour periods of salt-spray exposure.

S14.6.4.1.4 The test chamber is closed at all times except for a maximum of 2 minutes which is allowed for removal or replacement of a bulb during each period.

S14.6.4.1.5 After the ten periods, the lens-reflector unit without the bulb must be immersed in deionized water for 5 minutes, then secured and allowed to dry by natural convection only.

S14.6.4.1.6 Using the voltage, resistance and pre-test set up of S14.6.4.1.1 the current in each filament circuit must be measured after the test conducted in S14.6.4.1.2.

S14.6.4.2 *Performance requirements.*

S14.6.4.2.1 After the completion of the corrosion-connector test, the sample headlamp must show no evidence of external or internal corrosion or rust visible without magnification.

S14.6.4.2.2 Loss of adhesion of any applied coating must not occur more than 3.2 mm from any sharp edge on the inside or out.

S14.6.4.2.3 Corrosion may occur on terminals only if the test current produced during the test of S14.6.4.1.6 is not less than 9.7 amperes.

S14.6.5 *Dust test.*

S14.6.5.1 *Procedure.*

S14.6.5.1.1 A sample headlamp, mounted on a headlamp test fixture, with all drain holes, breathing devices or other designed openings in their normal operating positions, is positioned within a cubical box, with inside measurements of 900 mm on each side or larger if required for adequate wall clearance (*i.e.*, a distance of at least 150 mm between the headlamp and any wall of the box).

S14.6.5.1.2 The box contains 4.5 kg of fine powdered cement which conforms to the ASTM C150–77, *Standard Specification for Portland Cement* (incorporated by reference, see 571.108 S5.2 of this title). Every 15 minutes, the cement is agitated by compressed air or fan blower(s) by projecting blasts of air for a two-second period in a downward direction so that the cement is diffused as uniformly as possible throughout the entire box.

S14.6.5.1.3 This test is continued for five hours after which the exterior surfaces of the headlamp are wiped clean.

S14.6.5.2 *Performance requirements.* After completion of the dust test, the sample headlamp must meet the requirements of the applicable photometry tests of Table XIX and Table XVIII. A ¼° reaim is permitted in any direction at any test point.

S14.6.6 *Temperature cycle test and internal heat test.*

S14.6.6.1 *Samples.* A sample headlamp with one or more replaceable light sources is tested according to the procedures of this section for a temperature cycle test and an internal heat test. The same sample headlamp is used in the temperature cycle test and then in the internal heat test.

S14.6.6.2 *General procedure.*

S14.6.6.2.1 Tests are made with all filaments lighted at design voltage that are intended to be used simultaneously in the headlamp and which in combination draw the highest total wattage. These include but are not limited to filaments used for turn signal lamps, fog lamps, parking lamps, and headlamp lower beams lighted with upper beams when the wiring harness is so connected on the vehicle.

S14.6.6.2.2 If a turn signal is included in the headlamp assembly, it is operated at 90 flashes a minute with a 75% ± 2% current ''on time.''

S14.6.6.2.3 If the lamp produces both the upper and lower beam, it is tested in both the upper beam mode and the lower beam mode under the conditions above described, except for a headlamp with a single type HB1 or type HB2 light source.

S14.6.6.3 *Temperature cycle test.*

S14.6.6.3.1 *Procedure.*

S14.6.6.3.1.1 A sample headlamp, mounted on a headlamp test fixture, is subjected to 10 complete consecutive cycles having the thermal cycle profile shown in Figure 6.

S14.6.6.3.1.2 During the hot cycle, the lamp, is energized commencing at point ''A'' of Figure 6 and de-energized at point ''B.''

S14.6.6.3.1.3 Separate or single test chambers may be used to generate the environment of Figure 6.

S14.6.6.3.1.4 All drain holes, breathing devices or other openings or vents of the headlamps are set in their normal operating positions.

S14.6.6.3.2 *Performance requirements.* After completion of the temperature cycle test, the sample headlamp must:

(a) show no evidence of delamination, fractures, entry of moisture, or deterioration of bonding material, color bleeding, warp or deformation visible without magnification;

(b) show no lens warpage greater than 3 mm when measured parallel to the optical axis at the point of intersection of the axis of each light source with the exterior surface of the lens; and

(c) meet the requirements of the applicable photometry tests of Table XIX and Table XVIII. A ¼° reaim is permitted in any direction at any test point.

S14.6.6.4 *Internal heat test.*

S14.6.6.4.1 *Procedure.*

S14.6.6.4.1.1 A sample headlamp lens surface that would normally be exposed to road dirt is uniformly sprayed with any appropriate mixture of dust and water or other materials to reduce the photometric output at the H–V test point of the upper beam (or the ½°D–1½°R test point of the lower beam as applicable) to 25% ± 2% of the output originally measured in the applicable photometric compliance test.

S14.6.6.4.1.2 A headlamp with a single type HB1 or type HB2 light source is tested on the upper beam only.

S14.6.6.4.1.3 Such reduction is determined under the same conditions as that of the original photometric measurement.

S14.6.6.4.1.4 After the photometric output of the lamp has been reduced as specified above, the sample lamp and its mounting hardware must be mounted in an environmental chamber in a manner similar to that indicated in Figure 7 ''Dirt/Ambient Test Setup.''

S14.6.6.4.1.5 The headlamp is soaked for one hour at a temperature of 35° + 4° − 0 °C) and then the lamp is energized according to the procedure of this section for one hour in a still air condition, allowing the temperature to rise from the soak temperature.

S14.6.6.4.1.6 At the end of one hour the sample lamp is returned to a room ambient temperature of 23° + 4° − 0 °C and a relative humidity of 30% ± 10% and allowed to stabilize to the room ambient temperature. The lens is then cleaned.

S14.6.6.4.2 *Performance requirements.* After completion of the temperature cycle test and meeting its requirements, and completion of the internal heat test, the sample headlamp must:

(a) have no lens warpage greater than 3 mm when measured parallel to the optical axis at the point of intersection of the axis of each light source with the exterior surface of the lens, and

(b) meet the requirements of the applicable photometry tests of Table XIX and Table XVIII. A ¼° reaim is permitted in any direction at any test point.

S14.6.7 *Humidity test.*

S14.6.7.1 *Procedure.*

S14.6.7.1.1 The test fixture consists of a horizontal steel plate to which three threaded steel or aluminum rods of ½ inch diameter are screwed vertically behind the headlamp.

S14.6.7.1.2 The sample headlamp assembly is clamped to the vertical rods, which are behind the headlamp. All attachments to the headlamp assembly are made behind the lens and vents or openings, and are not within 2 inches laterally of a vent inlet or outlet.

S14.6.7.1.3 The mounted headlamp assembly is oriented in its design operating position, and is placed in a controlled environment at a temperature of 100° + 7° − 0° F (38° + 4° − 0° C) with a relative humidity of not less than 90%. All drain holes, breathing devices, and other openings are set in their normal operation positions for all phases of the humidity test.

S14.6.7.1.4 The headlamp is subjected to 24 consecutive 3-hour test cycles. In each cycle, the headlamp is energized for 1 hour at design voltage with the highest combination of filament wattages that are intended to be used, and then de-energized for 2 hours. If the headlamp incorporates a turn signal then the turn signal flashes at 90 flashes per minute with a 75% ± 2% current ''on-time.''

S14.6.7.1.5 Within 3 minutes after the completion of the 24th cycle, the air flow test will begin. The following procedure shall occur: the mounted assembly is removed, placed in an insulating box and covered with foam material so that there is no visible air space around the assembly; the box is closed, taken to the air flow test chamber, and placed within it. Inside the chamber, the assembly with respect to the air flow, is oriented in its design operating position. The assembly is positioned in the chamber so that the center of the lens is in the center of the opening of the air flow entry duct during the test. The headlamp has at least 3 inches clearance on all sides, and at least 4 inches to the entry and exit ducts at the closest points. If vent tubes are used which extend below the lamp body, the 3 inches are measured from the bottom of the vent tube or its protection. The temperature of the chamber is 73° + 7° − 0 °F (23° + 4° − 0 °C) with a relative humidity of 30% + 10% − 0%. The headlamp is not energized.

S14.6.7.1.6 Before the test specified in paragraph S14.6.7.1.7 of this section, the uniformity of the air flow in the empty test chamber at a plane 4 inches downstream of the air entry duct is measured over a 4 inch square grid. The uniformity of air flow at each grid point is ± 10% of the average air flow specified in paragraph S14.6.7.1.7 of this section.

S14.6.7.1.7 The mounted assembly in the chamber is exposed, for one hour, to an average air flow of 330 +0 −30 ft/min as measured with an air velocity measuring probe having an accuracy of ± 3% in the 330 ft/min range. The average air flow is the average of the velocity recorded at six points around the perimeter of the lens. The six points are determined as follows: At the center of the lens, construct a horizontal plane. The first two points are located in the plane, 1 inch outward from the intersection of the plane and each edge of the lens. Then, trisect the distance between these two points and construct longitudinal vertical planes at the two intermediate locations formed by the

trisection. The four remaining points are located in the vertical planes, one inch above the top edge of the lens, and one inch below the bottom edge of the lens.

S14.6.7.1.8 After one hour, the headlamp is removed and inspected for moisture.

S14.6.7.2 *Performance requirements.* After completion of the humidity test, the sample headlamp must show no evidence of interior delamination or moisture, fogging or condensation visible without magnification.

S14.6.8 *Vibration test.*

S14.6.8.1 *Samples.* The mounting bracket with a sample headlamp installed must not have a resonant frequency in the 10–55 Hz. range.

S14.6.8.2 *Procedure.* The mounted sample headlamp is bolted to the anvil end of the table of the vibration test machine of Figure 21 and vibrated 750 cpm through a distance of 1/8 in. The table is spring mounted at one end and fitted with steel calks on the underside of the other end. The table is of sufficient size to completely contain the test fixture base with no overhang. The calks are to make contact with the steel anvil once during each cycle at the completion of the fall. The rack is operated under a spring tension of 60 to 70 lb. The vibration is applied in the vertical axis of the headlamp as mounted on the vehicle. Bulb filaments are not energized during the test. The test is continued for 1 hour.

S14.6.8.3 *Performance requirements.* After completion of the vibration test, there must be no evidence of loose or broken parts, other than filaments, visible without magnification.

S14.6.9 *Sealing test.*

S14.6.9.1 *Procedure.*

S14.6.9.1.1 An unfixtured sample headlamp in its design mounting position is placed in water at a temperature of 176° ± 5° F (60° ± 3° C) for one hour. The headlamp is energized in its highest wattage mode, with the test voltage at 12.8 ± 0.1V during immersion.

S14.6.9.1.2 The lamp is then de-energized and immediately submerged in its design mounting position into water at 32° +5° −0° F (0° +3° −0° C). The water is in a pressurized vessel, and the pressure is increased to 10 psi (70 kPa), upon placing the lamp in the water. The lamp must remain in the pressurized vessel for a period of thirty minutes.

S14.6.9.1.3 This entire procedure is repeated for four cycles.

S14.6.9.1.4 Then the lamp is inspected for any signs of water on its interior. During the high temperature portion of the cycles, the lamp is observed for signs of air escaping from its interior.

S14.6.9.2 *Performance requirements.* After completion of the sealing test, a sample headlamp confirmed to be sealed need not meet the corrosion test, dust test, or humidity test of this Section. If any water is on the interior or air escapes, the lamp is not a sealed lamp.

S14.6.10 *Chemical resistance test of reflectors of replaceable lens headlamps test.*

S14.6.10.1 *Procedure.*

S14.6.10.1.1 *Test fluids.* The three test fluids used in the chemical resistance test include;

(a) Tar remover (consisting by volume of 45% xylene and 55% petroleum base mineral spirits);

(b) Mineral spirits; and

(c) Fluids other than water contained in the manufacturer's instructions for cleaning the reflector.

S14.6.10.1.2 *Fluid application.* With a sample headlamp in the headlamp test fixture and the lens removed, the entire surface of the reflector that receives light from a headlamp light source is wiped once to the left and once to the right with a 6-inch square soft cotton cloth (with pressure equally applied) which has been saturated once in a container with 2 ounces of one of the test fluids listed in S14.6.10.1.1. The lamp is wiped within 5 seconds after removal of the cloth from the test fluid.

S14.6.10.1.3 *Test duration.* After the headlamp has been wiped with the test fluid, it is stored in its designed operating attitude for 48 hours at a temperature of 73° ± 7° F (23° ± 4° C) and a relative humidity of 30% ± 10%. At the end of the 48-hour period, the headlamp is wiped clean with a soft dry cotton cloth and visually inspected.

S14.6.10.2 *Performance requirements.* After completion of the chemical resistance test, the sample headlamp must have no surface deterioration, coating delamination, fractures, deterioration of bonding or sealing materials, color bleeding or color pickup visible without magnification and the headlamp must meet the requirements of the applicable photometry tests of Table XIX and Table XVIII. A ¼° re-aim is permitted in any direction at any test point.

S14.6.11 *Corrosion resistance test of reflectors of replaceable lens headlamps test.*

S14.6.11.1 *Procedure.*

S14.6.11.1.1 A sample headlamp with the lens removed, unfixtured and in its designed operating attitude with all drain holes, breathing devices or other designed openings in their normal operating positions, must be subjected to a salt spray (fog) test in accordance with ASTM B117–73, *Method of Salt Spray (Fog) Testing* (incorporated by reference, see 571.108 S5.2 of this title), for 24 hours, while mounted in the middle of the chamber.

S14.6.11.1.2 Afterwards, the headlamp must be stored in its designed operating attitude for 48 hours at a temperature of 73° ± 7° F (23° ± 4° C) and a relative humidity of 30% ± 10% and allowed to dry by natural convection only. At the end of the 48-hour period, the reflector must be cleaned according to the instructions supplied with the headlamp manufacturer's replacement lens, and inspected. The lens and seal must then be attached according to these instructions and the headlamp tested for photometric performance.

S14.6.11.2 *Performance requirements.* After the completion of the corrosion test, the sample headlamp must show no evidence of corrosion or rust visible without magnification on any part of the headlamp reflector that receives light from a headlamp light source, on any metal light or heat shield assembly, or on a metal reflector of any other lamp. The sample headlamp with the replacement lens installed must meet the requirements of the applicable photometry tests of Table XIX and Table XVIII. A ¼° re-aim is permitted in any direction at any test point.

S14.6.12 *Inward force test.*

S14.6.12.1 *Procedure.* A sample headlamp mechanism, including the aiming adjusters, must be subjected to an inward force of 222 N directed normal to the headlamp aiming plane and symmetrically about the center of the headlamp lens face.

S14.6.12.2 *Performance requirements.* After the completion of the inward force test, a sample headlamp must not permanently recede by more than 2.5 mm. The aim of the headlamp must not permanently deviate by more than 3.2 mm at a distance of 7.6 m. The aim of any headlamp that is capable of being mechanically aimed by externally applied aiming devices must not change by more than 0.30°.

S14.6.13 *Torque deflection test.*

S14.6.13.1 *Procedure.*

S14.6.13.1.1 The sample headlamp assembly is mounted in designed vehicle position and set at nominal aim (H=0, V=0).

S14.6.13.1.2 A sealed beam headlamp, except Type G and Type H, is removed from its mounting and replaced by the applicable deflectometer. (Type C and Type D-Figure 18, Type A and Type E-Figure 16, Type B-Figure 17, and Type F-Figure 14).

S14.6.13.1.3 Sealed beam headlamps Type G and Type H have the adapter of Figure 15 and the deflectometer of Figure 14 attached to the headlamp.

S14.6.13.1.4 A torque of 2.25 Nm must be applied to the headlamp assembly through the deflectometer and a reading on the thumbwheel is taken. The torque must be removed and a second reading on the thumbwheel is taken.

S14.6.13.1.5 Headlamps other than sealed beam headlamps must have the downward force used to create the torque applied parallel to the aiming reference plane, through the aiming pads, and displaced forward using a lever arm such that the force is applied on an axis that is perpendicular to the aiming reference plane and originates at the center of the aiming pad pattern (see Figure 3).

S14.6.13.1.6 For headlamps using the aiming pad locations of Group I, the distance between the point of application of force and the aiming reference plane is not less than 168.3 mm plus the distance from the aiming reference plane to the secondary plane, if used.

S14.6.13.1.7 For headlamps using the aiming pad locations of Group II, the distance between the point of application of force and the aiming reference plane is not less than 167.9 mm plus the distance to the secondary plane, if used.

S14.6.13.1.8 For headlamps using the nonadjustable Headlamp Aiming Device Locating Plates for the 146 mm diameter, the 176 mm diameter, and the 92x150 mm sealed beam, the distance between the point of application of force and the aiming plane is not, respectively, less than 177.4 mm, 176.2 mm, and 193.7 mm.

S14.6.13.2 *Performance requirements.* The aim of each sample headlamp must not deviate more than 0.30° when the downward torque is removed.

S14.6.14 *Retaining ring test.*

S14.6.14.1 *Procedure.* A sample headlamp with the minimum flange thickness of: Type A–31.5 mm, Type B–10.1 mm, Type C–11.8 mm, Type D–11.8 mm, Type E–31.5 mm, and Type F–8.6 mm, is secured between the appropriate mounting ring and retaining ring (mounting ring and aiming ring for Type F).

S14.6.14.2 *Performance requirements.* The sample headlamp when secured per the procedure must be held tight enough that it will not rattle.

S14.6.15 *Headlamp connector test.*

S14.6.15.1 *Procedure.* A sample headlamp connected into the test circuit of Figure 4 has the power supply adjusted until 10 amperes DC are flowing through the circuit. The test is repeated for each filament circuit of the headlamp.

S14.6.15.2 *Performance requirements.* The voltage drop, as measured in the test circuit of Figure 4, must not exceed 40 mv DC in any applicable filament circuit of the sample headlamp.

S14.6.16 *Headlamp wattage test.*

S14.6.16.1 *Procedure.* A sample headlamp that has been seasoned is energized so as to have 12.8v ± 20 mv DC applied across each filament circuit and the current flowing in each circuit is measured.

S14.6.16.2 *Performance requirements.* The wattage of each filament circuit of the sample headlamp must not exceed the applicable value for that type of headlamp as shown in Table II.

S14.6.17 *Aiming adjustment test-laboratory.*

S14.6.17.1 *Procedure.* A sample headlamp is mounted in design position at nominal (H = 0, V = 0) aim with an accurate measuring device such as a spot projector or other equally accurate means attached. The headlamp is adjusted to the extremes of travel in each horizontal and vertical direction.

S14.6.17.2 *Performance requirements.* Visually aimed lower beam headlamps without a VHAD are required not to have a horizontal adjustment mechanism and horizontal aim range requirements do not apply.

S14.6.17.2.1 A sample sealed beam headlamp, other than a Type F, tested per the procedure must provide a minimum of ± 4.0° adjustment range in both the vertical and horizontal planes and if equipped with independent vertical and horizontal aiming screws, the adjustment must be such that neither the vertical nor horizontal aim must deviate more than 100 mm from horizontal or vertical planes, respectively, at a distance of 7.6 m through an angle of ± 4.0°.

S14.6.17.2.2 A sample Type F sealed beam, integral beam, replaceable bulb, or combination headlamp tested per the procedure must provide a minimum of ± 4.0° adjustment range in the vertical plane and ± 2.5° in the horizontal plane and if equipped with independent vertical and horizontal aiming screws, the adjustment must be such that neither the vertical nor horizontal aim must deviate more than 100 mm from horizontal or vertical planes, respectively, at a distance of 7.6 m through an angle of ± 2.5° and ± 4.0°, respectively.

S14.6.17.2.3 A sample headlamp that is aimed by moving the reflector relative to the lens and headlamp housing, and vice versa must provide a minimum adjustment range in the vertical plane not less than the full range of the pitch on the vehicle on which it is installed and ± 2.5° in the horizontal plane.

S14.6.18 *Aiming adjustment test-on vehicle.*

S14.6.18.1 *Procedure.*

S14.6.18.1.1 A sample headlamp is mounted on the vehicle at nominal (H = 0, V = 0) aim with an accurate measuring device such as a spot projector or other equally accurate means attached.

S14.6.18.1.2 The installed range of static pitch angle is, at a minimum, determined from unloaded vehicle weight to gross vehicle weight rating, and incorporates pitch angle effects from maximum trailer or trunk loadings, the full range of tire intermix sizes and suspensions recommended and/or installed by the vehicle manufacturer, and the anticipated effects of variable passenger loading.

S14.6.18.1.3 The headlamp is adjusted to the extremes of travel in each horizontal and vertical direction.

S14.6.18.2 *Performance requirements.*

S14.6.18.2.1 A sample headlamp tested per the procedure must provide a minimum vertical adjustment range not less than the full range of pitch of the vehicle on which it is installed.

S14.6.18.2.2 The vertical aim mechanism must be continuously variable over the full range.

S14.6.18.2.3 The adjustment of one aim axis through its full on-vehicle range must not cause the aim of the other axis to deviate more than ± 0.76°. If this performance is not achievable, the requirements of S10.18.3.1 apply, except that if the aiming mechanism is not a VHAD, the requirements specific to VHADs are not applicable, and the instruction must be specific to the aiming mechanism installed.

S14.7 *Replaceable light source physical test procedures and performance requirements.*

S14.7.1 *Deflection test for replaceable light sources.*

S14.7.1.1 *Procedure.*

S14.7.1.1.1 With the sample light source rigidly mounted in a fixture in a manner indicated in Figure 8, a force 4.0 ± 0.1 pounds (17.8 ± 0.4N) is applied at a distance ''A'' from the reference plane perpendicular to the longitudinal axis of the glass capsule and parallel to the smallest dimension of the pressed glass capsule seal.

S14.7.1.1.2 The force is applied (using a rod with a hard rubber tip with a minimum spherical radius of .039 in [1 mm]) radially to the surface of the glass capsule in four locations in a plane parallel to the reference plane and spaced at a distance ''A'' from that plane. These force applications are spaced 90° apart starting at the point perpendicular to the smallest dimension of the pressed seal of the glass capsule.

S14.7.1.1.3. The bulb deflection is measured at the glass capsule surface at 180° opposite to the force application. Distance ''A'' for a replaceable light source other than an HB Type is the dimension provided in accordance with Appendix A of part 564 of this chapter, section I.A.1 if the light source has a lower beam filament, or as specified in section I.B.1 if the light source has only an upper beam filament.

S14.7.1.2 *Performance requirements.* After completion of the deflection test, a sample light source must have no permanent deflection of the glass envelope exceeding 0.13 mm in the direction of applied force.

S14.7.2 *Pressure test for replaceable light sources.*

S14.7.2.1 *Procedure.*

S14.7.2.1.1 The capsule, lead wires and/or terminals, and seal on each sample Type HB1, Type HB3, Type HB4, and Type HB5 light source, and on any other replaceable light source which uses a seal, is installed in a pressure chamber as shown in Figure 10 so as to provide an airtight seal. The diameter of the aperture in Figure 10 on a replaceable light source (other than an HB Type) must be that dimension furnished for such light source in compliance with Appendix A or Appendix B of part 564 of this chapter.

S14.7.2.1.2 The light source is immersed in water for one minute while inserted in a cylindrical aperture specified for the light source, and subjected to an air pressure of 70 KPa (10 psig) on the glass capsule side.

S14.7.2.2 *Performance requirements.* After completion of the pressure test, the sample light source with an airtight seal on the low pressure (connector side) must show no evidence of air bubbles on that side.

S14.7.3 *Replaceable light source power and flux measurement procedure.* The measurement of maximum power and luminous flux that is submitted in compliance with section VII of Appendix A of part 564 of this chapter, or section IV of Appendix B of part 564 of this chapter, is made in accordance with this paragraph.

S14.7.3.1 *Seasoning.* The filament or discharge arc is seasoned before measurement of either maximum power and luminous flux.

S14.7.3.1.1 *Resistive filament source.* Seasoning of a light source with a resistive element type filament is made in accordance with this S14.2.5.4 of this standard.

S14.7.3.1.2 *Discharge source.* For a light source using excited gas mixtures as a filament or discharge arc, seasoning of the light source system, including any ballast required for its operation, is made in accordance with section 4.0 of SAE Recommended Practice J2009 FEB93, *Discharge Forward Lighting Systems.*

S14.7.3.2 *Test voltage.* Measurements are made with a direct current test voltage of 12.8 v regulated within one quarter of one percent.

S14.7.3.3 *Luminous flux measurement.* The measurement of luminous flux is made in accordance with the Illuminating Engineering Society of North America, LM 45; IES *Approved Method for Electrical and Photometric Measurements of General Service Incandescent Filament Lamps* (April 1980) (incorporated by reference, see 571.108 S5.2 of this title).

S14.7.3.3.1 *Resistive filament light source setup.* Luminous flux measurements are made with the black cap installed on Type HB1, Type HB2, Type HB4, and Type HB5, and on any other replaceable light source so designed; and is with the electrical conductor and light source base shrouded with an opaque white cover, except for the portion normally located within the interior of the lamp housing. The measurement of luminous flux for the Types HB3 and HB4 is made with the base covered with a white cover as shown in the drawings for Types HB3 and HB4 filed in Docket No. NHTSA 98–3397. The white covers are used to eliminate the likelihood of incorrect lumen measurement that will occur should the reflectance of the light source base and electrical connector be low.

S14.7.3.3.2 *Discharge light source setup.* With the test voltage applied to the ballast input terminals, the measurement of luminous flux is made with the black cap installed, if so designed, and is made with an opaque white colored cover, except for the portion normally located within the interior of the lamp housing.

S14.8 *Vehicle headlamp aiming devices (VHAD) physical test procedures and performance requirements.*

S14.8.1 *Samples.* The same VHAD and associated headlamp(s) or headlamp assembly must be rigidly mounted in a headlamp test fixture with the aiming plane horizontal and vertical and with the scale on the device set at 0.

S14.8.2 *Scale graduation test.*

S14.8.2.1 *Procedure.* Check each graduation on the horizontal and vertical aim scales.

S14.8.2.2 *Performance requirements.* Scale graduation from correct aim must not exceed ± 0.2° horizontally and ± 0.1° vertically.

S14.8.3 *Cold scale graduation test.*

S14.8.3.1 *Procedure.* The VHAD and an unlighted headlamp assembly must then be stabilized at −7° ± 3°C in a circulating air environmental test chamber for a 30 minute temperature soak.

S14.8.3.2 *Performance requirements.* After completion of a 30 minute temperature soak the variation from correct aim shown by the sample VHAD must not exceed ± 0.2° horizontally and ± 0.1° vertically.

S14.8.4 *Hot scale graduation test.*

S14.8.4.1 *Procedure.* The VHAD and the headlamp assembly with its highest wattage filament, or combination of filaments intended to be used simultaneously, energized at its design voltage, is then stabilized at 38° ± 3 °C in a circulating air environmental test chamber for a 30 minute temperature soak.

S14.8.4.2 *Performance requirements.* After completion of a 30 minute temperature soak the variation from correct aim shown by the sample VHAD must not exceed ± 0.2° horizontally and ± 0.1° vertically.

S14.8.5 *Thermal cycle test.*

S14.8.5.1 *Procedure.* The VHAD and an unlighted headlamp assembly are then placed in a circulating air environmental test chamber and exposed to a temperature of 60° ± 3°C for 24 hours, followed by a temperature of −40° ± 3°C for 24 hours, and are then permitted to return to room temperature.

S14.8.5.2 *Performance requirements.* After completion of the thermal cycle test the variation from correct aim shown by the sample VHAD must not exceed ± 0.2° horizontally and ± 0.1° vertically and the VHAD and headlamp assembly must show no damage which would impair its ability to perform as specified in this standard.

S14.8.6 *Corrosion test.*

S14.8.6.1 *Procedure.* The VHAD and headlamp assembly are then tested according to the headlamp corrosion test of S14.6.3.

S14.8.6.2 *Performance requirements.* After completion of the corrosion test the sample VHAD and headlamp must not have any observed corrosion that would result in the failure of any other

applicable tests contained in this section.

S14.8.7 *Photometry test.*

S14.8.7.1 *Procedure.* The VHAD and headlamp assembly are then tested for photometric compliance according to the procedure of S14.2.5 and for replacement units per S10.18.8.4.

S14.8.7.2 *Performance requirements.* The sample headlamp must comply with the applicable photometric requirements of Table XIX and Table XVIII and with replacement units installed per S10.18.8.4.

S14.9 *Associated equipment physical test procedures and performance requirements.*

S14.9.1 *Turn signal operating unit durability test.*

S14.9.1.1 *Power supply specifications.* During the test, the unit is operated at 6.4 volts for 6 volt systems or 12.8 volts for 12 volt systems from a power supply meeting the following requirements:

(a) An output current that is at least 10 times the load current;

(b) Voltage regulation that allows a voltage change of less than 5%;

(c) Ripple voltage of not more than 5%;

(d) A response time of not more than 25 milliseconds rise time from 0 to rated current at rated voltage in a pure resistance circuit; and

(e) An output impedance of not more than 0.005 ohms dc.

S14.9.1.2 *Procedure.*

S14.9.1.2.1 The sample unit is operated with the maximum bulb load it will experience on the vehicle on which it will be installed. Bulbs that fail during the test are replaced. The turn signal flasher is not to be included in the test circuit. When the unit includes a self-canceling means, the test equipment is arranged so that the unit will be turned ''off'' in its normal operating manner.

S14.9.1.2.2 The test is conducted at a rate not to exceed 15 complete cycles per minute. One complete cycle consists of the following sequence: Off, left turn, off, right turn, and return to off.

S14.9.1.2.3 The voltage drop from the input terminal of the device to each lamp output terminal, including 3 in of 16 or 18 gage wire, is measured at the start of the test, at intervals of not more than 25,000 cycles during the test, and at the completion of the test.

S14.9.1.3 *Performance requirements.*

S14.9.1.3.1 A turn signal operating unit is considered to have met the requirements of the durability test if it remains operational after completing at least 100,000 cycles, and the voltage drop between the input contact and any output contact, including required length of wire, does not exceed 0.25 volts.

S14.9.1.3.2 A turn signal operating unit is considered to have met the requirements of the durability test if it remains operational after completing at least 175,000 cycles for a unit installed on a multipurpose passenger vehicle, truck, or bus 2032 mm or more in overall width, and the voltage drop between the input contact and any output contact, including required length of wire, does not exceed 0.25 volts.

S14.9.1.3.3 If stop signals also operate through the turn signal operating unit, the voltage drop of any additional switch contacts must meet the same requirements as the turn signal contacts.

S14.9.2 *Vehicular hazard warning signal operating unit durability test.*

S14.9.2.1 *Procedure.*

S14.9.2.1.1 The sample unit is operated at its rated voltage with the maximum bulb load it will experience on the vehicle on which it will be installed. Bulbs that fail during the test are replaced. The hazard warning signal flasher is not to be included in the test circuit.

S14.9.2.1.2 The unit is turned ''on'' and ''off'' in its normal operating manner at a rate not to exceed 15 complete cycles per minute. One complete cycle consists of the sequence: Off, on, and return to off. The test consists of 10,000 cycles at an ambient temperature of 75° ± 10 °F followed by 1 hour constant ''on'' at the same temperature.

S14.9.2.1.3 The voltage drop from the input terminal of the device to each lamp output terminal, including 3 in of 16 or 18 gage wire, is measured at the start of the test and at the completion of the test.

S14.9.2.2 *Performance requirements.* A hazard warning signal operating unit is considered to have met the requirements of the durability test if it remains operational after completing 10,000 cycles and the 1 hour constant ''on'' and the voltage drop between the input contact and any output contact, including required length of wire, does not exceed 0.3 volts for either 6.4 or 12.8 line voltage both at the start and completion of the test.

S14.9.3 *Turn signal flasher and vehicular hazard warning signal flasher tests.*

S14.9.3.1 *Standard test circuit.* All turn signal flasher and vehicular hazard warning signal flasher tests use the standard test circuit of Figure 22.

S14.9.3.1.1 *Test circuit setup.*

S14.9.3.1.1.1 The effective series resistance in the total circuit between the power supply and the bulb sockets (excluding the flasher and bulb load(s) using shorting bars) is 0.10 ± 0.01 ohm.

S14.9.3.1.1.2 The circuit resistance at A–B of Figure 22 is measured with flasher and bulb load(s) each shorted out with an effective shunt resistance not to exceed 0.005 ohms.

S14.9.3.1.1.3 The voltage to the bulbs at C–D of Figure 22 is adjusted to 12.8 volts (or 6.4 volts) with the flasher shorted out by an effective shunt resistance not to exceed 0.005 ohms. The load current is adjusted by simultaneously adjusting trimmer resistors, R.

S14.9.3.1.1.4 For testing fixed-load flashers at other required voltages, adjust the power supply to provide required voltages, at the required temperatures, at C–D of Figure 22, without readjustment of trimming resistors, R.

S14.9.3.1.1.5 For variable-load flashers, the circuit is first adjusted for 12.8 volts (or 6.4 volts) at C–D of Figure 22, with the minimum required load, and the power supply is adjusted to provide other required test voltages, at required temperatures, at C–D of Figure 22, without readjustment of trimming resistors, R (each such required voltage being set with the minimum required load in place). The required voltage tests with the maximum load are conducted without readjusting each corresponding power supply voltage, previously set with minimum bulb load.

S14.9.3.1.1.6 A suitable high impedance measuring device connected to points X–Y in Figure 22 is used for measuring flash rate, percent current ''on'' time, and voltage drop across the flasher. The measurement of these quantities does not affect the circuit.

S14.9.3.2 *Power supply specifications.*

S14.9.3.2.1 *Starting time, voltage drop, and flash rate and percent current ''on'' time tests.* The power supply used in the standard test circuit for conducting the starting time, the voltage drop, and the flash rate and percent current ''on'' time tests must comply with the following specifications:

(a) Must not generate any adverse transients not present in motor vehicles;

(b) Be capable of supplying 11–16 vdc for 12 volt flashers and 5–9 vdc for 6 volt flashers to the input terminals of the standard test circuit;

(c) Be capable of supplying required design current(s) continuously and inrush currents as required by the design bulb load complement;

(d) Be capable of supplying an output voltage that does not deviate more than 2% with changes in the static load from 0 to maximum (not including inrush

current) nor for static input line voltage variations;

(e) Be capable of supplying an output voltage that does not deviate more than 1.0 vdc from 0 to maximum load (including inrush current) and must recover 63% of its maximum excursion within 100 μsec; and

(f) Have a ripple voltage of 75mv, peak to peak.

S14.9.3.2.2 *Durability tests.* The power supply used in the standard test circuit for conducting durability tests must comply with the following specifications:

(a) Must not generate any adverse transients not present in motor vehicles;

(b) Be capable of supplying 13 vdc and 14 vdc for 12 volt flashers and 6.5 vdc and 7 vdc for 6 volt flashers to the input terminals of the standard test circuit;

(c) Be capable of supplying a continuous output current of the design load for one flasher times the number of flashers and inrush currents as required by the design bulb load complement;

(d) Be capable of supplying an output voltage that does not deviate more than 2% with changes in the static load from 0 to maximum (not including inrush current) and means must be provided to compensate for static input line voltage variations;

(e) Be capable of supplying an output voltage that does not deviate more than 1.0 vdc from 0 to maximum load (including inrush current) and must recover 63% of its maximum excursion within 5 μsec; and

(f) Have a ripple voltage of 300 mv, peak to peak.

S14.9.3.3 *Turn signal flasher starting time test.*

S14.9.3.3.1 *Samples.* Twenty sample flashers chosen from random from fifty representative samples are subjected to a starting time test using the standard test circuit.

S14.9.3.3.2 *Procedure.*

S14.9.3.3.2.1 The test is conducted in an ambient temperature of 75 ± 10 °F with the design load (variable load flashers are tested with their minimum and their maximum design load) connected and the power source for the test circuit adjusted to apply design voltage at the bulbs.

S14.9.3.3.2.2 The time measurement starts when the voltage is initially applied. Compliance is based on an average of three starts for each sample separated by a cooling interval of 5 minutes.

S14.9.3.3.3 *Performance requirements.* The requirements of the starting time test are considered to have been met if 17 of 20 samples comply with the following:

(a) A flasher having normally closed contacts must open (turn off) within 1.0 second for a device designed to operate two signal lamps, or within 1.25 seconds for a device designed to operate more than two lamps, or

(b) A flasher having normally open contacts must complete the first cycle (close the contacts and then open the contacts) within 1.5 seconds.

S14.9.3.4 *Turn signal flasher voltage drop test.*

S14.9.3.4.1 *Samples.* The same twenty sample flashers used in the starting time test are subjected to a voltage drop test using the standard test circuit.

S14.9.3.4.2 *Procedure.*

S14.9.3.4.2.1 The test is conducted in an ambient temperature of 75 ± 10 °F with the design load (variable load flashers are tested with their maximum design load) connected and the power source for the standard test circuit adjusted to apply 12.8 volts or 6.4 volts at the bulbs according to the flasher rating.

S14.9.3.4.2.2 The voltage drop is measured between the input and load terminals of the flasher during the ''on'' period after the flashers have completed at least five consecutive cycles.

S14.9.3.4.3 *Performance requirements.* The requirements of the voltage drop test are considered to have been met if 17 of 20 samples comply with the lowest voltage drop across any flasher not exceeding 0.80 volt.

S14.9.3.5 *Turn signal flasher flash rate and percent current ''on'' time test.*

S14.9.3.5.1 *Samples.* The same twenty sample flashers used in the voltage drop test are subjected to a flash rate and percent of current ''on'' time test.

S14.9.3.5.2 *Procedure.*

S14.9.3.5.2.1 The test is conducted using the standard test circuit with the design load (variable load flashers are tested with their minimum and their maximum design load) connected and design voltage applied to the bulbs.

S14.9.3.5.2.2 Compliance is determined using the following combinations of ambient temperature and bulb voltage:

(a) 12.8 volts (or 6.4 volts) and 75° ± 10 °F,

(b) 12.0 volts (or 6.0 volts) and 0° ± 5 °F,

(c) 15.0 volts (or 7.5 volts) and 0° ± 5 °F,

(d) 11.0 volts (or 5.5 volts) and 125° ± 5 °F, and

(e) 14.0 volts (or 7.0 volts) and 125° ± 5 °F.

S14.9.3.5.2.3 Flash rate and percent current ''on'' time are measured after the flashers have completed five consecutive cycles and are determined by an average of at least three consecutive cycles.

S14.9.3.5.3 *Performance requirements.* The requirements of the flash rate and percent current ''on'' time test are considered to have been met if 17 of 20 samples comply with the following:

(a) The performance of a normally closed type flasher must be within the unshaded portion of the polygon shown in Figure 2, or

(b) The performance of a normally open type flasher must be within the entire rectangle including the shaded areas shown in Figure 2.

S14.9.3.6 *Turn signal flasher durability test.*

S14.9.3.6.1 *Samples.* Twenty sample flashers chosen from random from the thirty samples not used in the previous tests are subjected to a durability test.

S14.9.3.6.2 *Procedure.*

S14.9.3.6.2.1 Conformance of the samples to the starting time, voltage drop, and flash rate and percent of current ''on'' time tests (limited to the 12.8 volts or 6.4 volts and 75° ± 10° F test condition only) is established.

S14.9.3.6.2.2 The test is conducted on each sample with the design load (variable load flashers are tested with their maximum design load) connected and 14 volts or 7.0 volts, according to the flasher rating, applied to the input terminals of the standard test circuit.

S14.9.3.6.2.3 The test cycle consists of 15 seconds on followed by 15 seconds off for a total time of 200 hours in an ambient temperature of 75° ± 10° F.

S14.9.3.6.3 *Performance requirements.* The requirements of the durability test are considered to have been met if, after completion, 17 of 20 samples comply with the performance requirements of the starting time, voltage drop, and flash rate and percent of current ''on'' time tests (limited to the 12.8 volts or 6.4 volts and 75° ± 10° F test condition only) when tested in the standard test circuit with design load and 12.8 volts (or 6.4 volts) applied to the bulbs.

S14.9.3.7 *Vehicular hazard warning signal flasher starting time test.*

S14.9.3.7.1 *Samples.* Twenty sample flashers chosen from random from fifty representative samples are subjected to a starting time test using the standard test circuit.

S14.9.3.7.2 *Procedure.*

S14.9.3.7.2.1 The test is conducted test in an ambient temperature of 75° ± 10° F with the minimum and maximum load connected and the power source for the test circuit adjusted to apply design voltage at the bulbs.

S14.9.3.7.2.2 The time measurement starts when the voltage is initially applied.

S14.9.3.7.3 *Performance requirements.* The requirements of the starting time test are considered to have been met if 17 of 20 samples comply with the following:

(a) A flasher having normally closed contacts must open (turn off) within 1.5 seconds after the voltage is applied, or

(b) A flasher having normally open contacts must complete the first cycle (close the contacts and then open the contacts) within 1.5 seconds after the voltage is applied.

S14.9.3.8 *Vehicular hazard warning signal flasher voltage drop test.*

S14.9.3.8.1 *Samples.* The same twenty sample flashers used in the starting time test are subjected to a voltage drop test using the standard test circuit.

S14.9.3.8.2 *Procedure.*

S14.9.3.8.2.1 The test is conducted in an ambient temperature of 75° ± 10° F with the maximum design load connected and the power source for the test circuit adjusted to apply design voltage at the bulbs.

S14.9.3.8.2.2 The voltage drop is measured between the input and load terminals of the flasher during the ''on'' period after the flashers have completed at least five consecutive cycles.

S14.9.3.8.3 *Performance requirements.* The requirements of the voltage drop test are considered to have been met if 17 of 20 samples comply with the lowest voltage drop across any flasher must not exceed 0.8 volt.

S14.9.3.9 *Vehicular hazard warning signal flasher flash rate and percent ''on'' time test.*

S14.9.3.9.1 *Samples.* The same twenty sample flashers used in the voltage drop test are subjected to a flash rate and percent of current ''on'' time test.

S14.9.3.9.2 *Procedure.*

S14.9.3.9.2.1 The test is conducted using the standard test circuit by and applying loads of from two signal lamps to the maximum design loading including pilot indicator.

S14.9.3.9.2.2 Compliance is determined using the following combinations of ambient temperature and bulb voltage:

(a) 12.8 volts (or 6.4 volts) and 75° ± 10° F,

(b) 11.0 volts (or 5.5 volts) and 125° ± 5° F,

(c) 11.0 volts (or 5.5 volts) and 0° ± 5° F,

(d) 13.0 volts (or 6.5 volts) and 125° ± 5° F, and

(e) 13.0 volts (or 6.5 volts) and 0° ± 5° F.

S14.9.3.9.2.3 Flash rate and percent current ''on'' time are measured after the flashers have completed five consecutive cycles and are determined by an average of at least three consecutive cycles.

S14.9.3.9.3 *Performance requirements.* The requirements of the flash rate and percent current ''on'' time test are considered to have been met if 17 of 20 samples comply with the following:

(a) The performance of a normally closed type flasher must be within the unshaded portion of the polygon shown in Figure 2, or

(b) The performance of a normally open type flasher must be within the entire rectangle including the shaded areas shown in Figure 2.

S14.9.3.10 *Vehicular hazard warning signal flasher durability test.*

S14.9.3.10.1 *Samples.* Twenty sample flashers chosen from random from the thirty samples not used in the previous tests are subjected to a durability test.

S14.9.3.10.2 *Procedure.*

S14.9.3.10.2.1 Conformance of the samples to the starting time, voltage drop, and flash rate and percent of current ''on'' time tests (limited to the 12.8 volts or 6.4 volts and 75° ± 10° F test condition only) is established.

S14.9.3.10.2.2 The test is conducted on each sample with the maximum design load connected and 13.0 volts (or 6.5 volts) applied to the input terminals of the standard test circuit.

S14.9.3.10.2.3 The flasher is subjected to continuous flashing for a total time of 36 hours in an ambient temperature of 75° ± 10° F.

S14.9.3.10.3 *Performance requirements.* The requirements of the durability test are considered to have been met if, after completion, 17 of 20 samples comply with the performance requirements of the starting time, voltage drop, and flash rate and percent of current ''on'' time tests (limited to the 12.8 volts or 6.4 volts and 75° ± 10° F test condition only) when tested in the standard test circuit with the power source adjusted to provide design voltage to the bulbs and with a minimum load of two signal lamp bulbs and the maximum design load, including pilot lamps, as specified by the manufacturer at an ambient temperature of 75° ± 10° F.

S14.9.3.11 *Semiautomatic headlamp beam switching device tests.*

S14.9.3.11.1 *Test conditions.* All tests are conducted with 13 volts input to the device unless otherwise specified.

S14.9.3.11.2 *Sensitivity test.*

S14.9.3.11.2.1 *Samples.* The sample device is mounted in and operated in the laboratory in the same environment as that encountered on the vehicle, that is tinted glass, grille work, etc.

S14.9.3.11.2.2 *Procedure.*

S14.9.3.11.2.2.1 The sample device is adjusted for sensitivity in accordance with the manufacturer's instructions. It is exposed to a light source capable of providing a variable intensity of at least 1.5 cd to 150 cd at 100 feet from the sample device.

S14.9.3.11.2.2.2 The device is switched to the lower beam mode in accordance with the ''dim'' limits specified and switched back to the upper beam mode in accordance with the ''hold'' limits specified for the specified test positions.

S14.9.3.11.2.2.3 To provide more complete information on sensitivity throughout the required vertical and horizontal angles, a set of constant footcandle curves are made at ''dim'' sensitivities of 17, 25, and 100 cd at 100 ft.

S14.9.3.11.2.3 *Performance requirements.*

S14.9.3.11.2.3.1 *Operating limits.*

Test position (degrees)	Dim (cd at 100 ft)	Hold (cd at 100 ft)
H V	Adjust to 15	1.5 min to 3.75 max.
H 2L	25 max	1.5 min.
H 4L	40 max	1.5 min.
H 6L	75 max	1.5 min.
H 2R	25 max	1.5 min.
H 5R	150 max to 40 min	1.5 min.
1D V	30 max	1.5 min.
1U V	30 max	1.5 min.

S14.9.3.11.2.3.2 There must be no sensitivity voids shown in the constant footcandle curves within the area limited by the test positions.

S14.9.3.11.3 *Voltage regulation test.*

S14.9.3.11.3.1 *Procedure.*

S14.9.3.11.3.1.1 The sensitivity of the sample device is adjusted so that it complies with the sensitivity test.

S14.9.3.11.3.1.2 The ''dim'' sensitivity is measured at the H–V test position at 11 volts input to the device and at 15 volts input to the device.

S14.9.3.11.3.2 *Performance requirements.* The device must switch to the lower beam mode at between 8 (cd at 100 ft) and 25 (cd at 100 ft) with the input voltage at 11 volts and at 15 volts.

S14.9.3.11.4 *Manual override test.*

S14.9.3.11.4.1 *Procedure.*

S14.9.3.11.4.1.1 The sensitivity of the sample device is adjusted so that it complies with the sensitivity test.

S14.9.3.11.4.1.2 The device is exposed to a test light that causes it to switch to the lower beam mode.

S14.9.3.11.4.1.3 The manufacturer's instructions are followed to cause the device to override the test light and switch to upper beam.

S14.9.3.11.4.1.4 In a similar manner, the test light is extinguished to cause the device to switch to the upper beam mode.

S14.9.3.11.4.1.5 Again the manufacturer's instructions are followed to cause the device to switch to lower beam.

S14.9.3.11.4.2 *Performance requirements.* The device, when operated in accordance with the manufacturer's instructions, must switch to the opposite beam with the test light energized and with the test light extinguished.

S14.9.3.11.5 *Warmup test.*

S14.9.3.11.5.1 *Procedure.*

S14.9.3.11.5.1.1 The sensitivity of the sample device is adjusted so that it complies with the sensitivity test and the test lamp extinguished.

S14.9.3.11.5.1.2 The test lamp will then be energized at a level of 25 (cd at 100 ft) at the H–V position of the device and the time for the device to switch to lower beam is measured.

S14.9.3.11.5.2 *Performance requirements.* If the warmup time of the device exceeds 10 seconds it shall maintain the headlamps on lower beam during warmup.

S14.9.3.11.6 *Temperature test.*

S14.9.3.11.6.1 *Procedure.*

S14.9.3.11.6.1.1 The sample device is exposed for 1 hour in a temperature corresponding to that at the device mounting location.

S14.9.3.11.6.1.2 For a device mounted in the passenger compartment or the engine compartment, the temperature is 210° F, mounted elsewhere, the temperature is 150° F.

S14.9.3.11.6.1.3 After this exposure the H–V ''dim'' sensitivity of the sample device is measured over the temperature range of −30° F to +100° F.

S14.9.3.11.6.2 *Performance requirements.* The device must switch to the lower beam mode between 8 (cd at 100 ft) and 25 (cd at 100 ft) over the temperature range of −30° F to +100° F.

S14.9.3.11.7 *Dust test.*

S14.9.3.11.7.1 *Procedure.*

S14.9.3.11.7.1.1 The sensitivity of the sample device is adjusted so that it complies with the sensitivity test.

S14.9.3.11.7.1.2 The device is then subjected to the dust test of S14.5.3.

S14.9.3.11.7.1.3 At the conclusion of the dust exposure the lens of the device must be wiped clean and the H–V ''dim'' sensitivity of the sample device is measured.

S14.9.3.11.7.2 *Performance requirements.* The device must switch to the lower beam mode between 8 (cd at 100 ft) and 25 (cd at 100 ft).

S14.9.3.11.8 *Corrosion test.*

S14.9.3.11.8.1 *Procedure.*

S14.9.3.11.8.1.1 The sensitivity of the sample device is adjusted so that it complies with the sensitivity test.

S14.9.3.11.8.1.2 All system components located outside the passenger compartment must be subjected to the corrosion test of S14.5.4 with the device not operating.

S14.9.3.11.8.1.3 Water is not permitted to accumulate on any connector socket.

S14.9.3.11.8.1.4 At the conclusion of the test the H–V ''dim'' sensitivity of the sample device must be measured.

S14.9.3.11.8.2 *Performance requirements.* The sample device must switch to the lower beam mode between 8 (cd at 100 ft) and 25 (cd at 100 ft).

S14.9.3.11.9 *Vibration test.*

S14.9.3.11.9.1 *Procedure.*

S14.9.3.11.9.1.1 The sensitivity of the sample device is adjusted so that it complies with the sensitivity test and the mechanical aim of the photounit determined.

S14.9.3.11.9.1.2 The sample device must be mounted in proper vehicle position and subjected to vibration of 5g constant acceleration for ½ hour in each of three directions: vertical; horizontal and parallel to the vehicle longitudinal axis; and horizontal and normal to the vehicle longitudinal axis.

S14.9.3.11.9.1.3 The vibration frequency must be varied from 30 to 200 and back to 30 cycles per second over a period of approximately 1 minute.

S14.9.3.11.9.1.4 The device must be operating during the test.

S14.9.3.11.9.1.5 At the conclusion of the test the H–V ''dim'' sensitivity of the sample device and the mechanical aim of the photounit must be measured.

S14.9.3.11.9.2 *Performance requirements.*

S14.9.3.11.9.2.1 The sample device must switch to the lower beam mode between 8 (cd at 100 ft) and 25 (cd at 100 ft).

S14.9.3.11.9.2.2 The mechanical aim of the device photounit must not have changed by more than 0.25° from the initial value.

S14.9.3.11.10 *Sunlight test.*

S14.9.3.11.10.1 *Procedure.*

S14.9.3.11.10.1.1 The sample device must be exposed for 1 hour in bright noonday sunlight (5000 fc minimum illumination with a clear sky) with the photounit aimed as it would be in service and facing an unobstructed portion of the horizon in the direction of the sun.

S14.9.3.11.10.1.2 The device must then be rested for 1 hour in normal room light at room temperature and the H–V ''dim'' sensitivity of the sample device is measured.

S14.9.3.11.10.2 *Performance requirements.* The sample device must switch to the lower beam mode between 8 (cd at 100 ft) and 25 (cd at 100 ft).

S14.9.3.11.11 *Durability test.*

S14.9.3.11.11.1 *Procedure.*

S14.9.3.11.11.1.1 The sensitivity of the sample device is adjusted so that it complies with the sensitivity test.

S14.9.3.11.11.1.2 The device photounit operated at a 13.0 input voltage on a cycle of 90 minutes on and 30 minutes off must be activated by a 60 cd light source at 100 ft, or equivalent, which is cycled on and off 4 times per minute for a period of 200 hours.

S14.9.3.11.11.1.3 The device must then rest for 2 hours in a lighted area of 50 to 150 fc after which the H–V ''dim'' sensitivity must be measured.

S14.9.3.11.11.2 *Performance requirements.* The sample device must switch to the lower beam mode between 8 (cd at 100 ft) and 25 (cd at 100 ft).

S14.9.3.11.12 *Return to upper beam test.*

S14.9.3.11.12.1 *Procedure.*

S14.9.3.11.12.1.1 The sensitivity of the sample device is adjusted so that it complies with the sensitivity test.

S14.9.3.11.12.1.2 The lens of the photounit must be exposed to light of 100 fc for 10 seconds.

S14.9.3.11.12.2 *Performance requirements.* The sample device must switch to upper beam mode within 2 seconds after the 100 fc light is extinguished.

TABLE I.–a—REQUIRED LAMPS AND REFLECTIVE DEVICES

Lighting device	Number and color	Mounting location	Mounting height	Device activation
All Passenger Cars, Multipurpose Passenger Vehicles (MPV), Trucks, and Buses				
Lower Beam Headlamps	White, of a headlighting system listed in Table II.	On the front, at the same height, symmetrically about the vertical centerline, as far apart as practicable.	Not less than 55.9 cm nor more than 137.2 cm. The wiring harness or connector assembly of each headlighting system must be designed so that only those light sources intended for meeting lower beam photometrics are energized when the beam selector switch is in the lower beam position, and that only those light sources intended for meeting upper beam photometrics are energized when the beam selector switch is in the upper beam position, except for certain systems listed in Table II. Steady burning, except that may be flashed for signaling purposes.	
Upper Beam Headlamps	White, of a headlighting system listed in Table II.	On the front, at the same height, symmetrically about the vertical centerline, as far apart as practicable.	Not less than 55.9 cm nor more than 137.2 cm.	
Turn Signal Lamps	2 Amber	At or near the front, at the same height, symmetrically about the vertical centerline, as far apart as practicable.	Not less than 15 inches, nor more than 83 inches.	Flash when the turn signal flasher is actuated by the turn signal operating unit.
	2 Amber or red Truck tractor exception, see S6.1.1.3.	On the rear, at the same height, symmetrically about the vertical centerline, as far apart as practicable.		
Taillamps	2 Red	On the rear, at the same height, symmetrically about the vertical centerline, as far apart as practicable.	Not less than 15 inches, nor more than 72 inches.	Steady burning. Must be activated when the headlamps are activated in a steady burning state or the parking lamps on passenger cars and MPVs, trucks, and buses less than 80 inches in overall width are activated. May be activated when the headlamps are activated at less than full intensity as Daytime Running Lamps (DRL).
Stop Lamps	2 Red	On the rear, at the same height, symmetrically about the vertical centerline, as far apart as practicable.	Not less than 15 inches, nor more than 72 inches.	Steady burning. Must be activated upon application of the service brakes. When optically combined with a turn signal lamp, the circuit must be such that the stop signal cannot be activated if the turn signal lamp is flashing.

TABLE I.–a—REQUIRED LAMPS AND REFLECTIVE DEVICES—Continued

Lighting device	Number and color	Mounting location	Mounting height	Device activation
				May also be activated by a device designed to retard the motion of the vehicle.
Side Marker Lamps	2 Amber	On each side as far to the front as practicable.	Not less than 15 inches.	Steady burning except may be flashed for signaling purposes. Must be activated when the headlamps are activated in a steady burning state or the parking lamps on passenger cars and MPVs, trucks, and buses less than 80 inches in overall width are activated.
	2 Red (not required on truck tractor).	On each side as far to the rear as practicable.		
Reflex Reflectors	On each side as far to the front as practicable.	2 Amber	Not less than 15 inches, nor more than 60 inches.	Not applicable.
	2 Red (not required on truck tractor).	On each side as far to the rear as practicable.		
	2 Red	On the rear, at the same height, symmetrically about the vertical centerline, as far apart as practicable. On a truck tractor may be mounted on the back of the cab not less than 4 inches above the height of the rear tires.		
Backup Lamp	1 White. Additional lamps permitted to meet requirements.	On the rear.	No requirement.	Steady burning. Must be activated when the ignition switch is energized and reverse gear is engaged. Must not be energized when the vehicle is in forward motion.
License Plate Lamp	1 White. Additional lamps permitted to meet requirements.	On the rear to illuminate license plate from top or sides.	No requirement.	Steady burning. Must be activated when the headlamps are activated in a steady burning state or when the parking lamps on passenger cars and MPVs, trucks, and buses less than 80 inches in overall width are activated.
Additional Lamps Required on All Passenger Cars, and on Multipurpose Passenger Vehicles (MPV), Trucks, and Buses, Less Than 2032 MM in Overall Width				
Parking lamps	2 Amber or white.	On the front, at the same height, symmetrically about the vertical centerline, as far apart as practicable.	Not less than 15 inches, nor more than 72 inches.	Steady burning. Must be activated when the headlamps are activated in a steady burning state.
Additional Lamp(s) Required on All Passenger Cars, and on Multipurpose Passenger Vehicles (MPV), Trucks, and Buses, Less Than 2032 MM in Overall Width and With a GVWR of 10,000 LBS or Less				
High mounted stop lamp	1 Red, or 2 red where exceptions apply. See Section 6.1.1.2.	On the rear including glazing, with the lamp center on the vertical centerline as viewed from the rear.	Not less than 34 inches except for passenger cars. See Section 6.1.4.1.	Steady burning. Must only be activated upon application of the service brakes or by a device designed to retard the motion of the vehicle.

TABLE I.–a—REQUIRED LAMPS AND REFLECTIVE DEVICES—Continued

Lighting device	Number and color	Mounting location	Mounting height	Device activation
Additional Lamps and Reflective Devices Required on All Passenger Cars, Multipurpose Passenger Vehicles (MPV), Trucks, and Buses, 30 Feet or Longer				
Intermediate side marker lamps.	2 Amber	On each side located at or near the midpoint between the front and rear side marker lamps.	Not less than 15 inches.	Steady burning except may be flashed for signaling purposes. Must be activated when the headlamps are activated in a steady burning state or when the parking lamps on passenger cars and MPVs, trucks, and buses less than 80 inches in overall width are activated.
Intermediate side reflex reflectors.	2 Amber	On each side located at or near the midpoint between the front and rear side reflex reflectors.	Not less than 15 inches, nor more than 60 inches.	Not applicable.
Additional Lamps Required on All Multipurpose Passenger Vehicles (MPV), Truck, and Buses, 2032 MM or More in Overall Width				
Clearance lamps	2 Amber	On the front to indicate the overall width of the vehicle, or width of cab on truck tractor, at the same height, symmetrically about the vertical centerline.	As near the top as practicable.	Steady burning.
	.....	May be located at a location other than the front if necessary to indicate the overall width of the vehicle, or for protection from damage during normal operation of the vehicle.		
	2 Red (not required on truck tractor).	On the rear to indicate the overall width of the vehicle, at the same height, symmetrically about the vertical centerline. May be located at a location other than the rear if necessary to indicate the overall width of the vehicle, or for protection from damage during normal operation of the vehicle.	As near the top as practicable, except where the rear identification lamps are mounted at the extreme height of the vehicle. Practicability of locating lamps on the vehicle header is presumed when the header extends at least 25 mm (1 inch) above the rear doors.	Steady burning.
Additional Lamps Required on All Multipurpose Passenger Vehicles (MPV), Truck, and Buses, 2032 MM or More in Overall Width				
Identification lamps	3 Amber	On the front, at the same height, as close as practicable to the vertical centerline, with lamp centers spaced not less than 6 inches or more than 12 inches apart.	As near the top of the vehicle or top of the cab as practicable.	Steady burning.

TABLE I.–a—REQUIRED LAMPS AND REFLECTIVE DEVICES—Continued

Lighting device	Number and color	Mounting location	Mounting height	Device activation
	3 Red (not required on truck tractor).	On the rear, at the same height, as close as practicable to the vertical centerline, with lamp centers spaced not less than 6 inches or more than 12 inches apart.	As near the top as practicable. Practicability of locating lamps on the vehicle header is presumed when the header extends at least 25 mm (1 inch) above the rear doors.	Steady burning.
Additional Lamps Required on All School Buses Except Multifunction School Activity Buses				
Signal warning lamps	2 Red plus 2 amber optional.	On the front of the cab as far apart as practicable, but in no case shall the spacing between lamps be less than 40 inches. Amber lamps, when installed, at the same height as and just inboard of the red lamp..	As high as practicable but at least above the windshield.	Flashing alternately between 60 to 120 cycles per minute, with an activation period sufficient to allow the lamp to reach full brightness, when actuated by a manual switch. Amber lamps, when installed, may only be activated by manual or foot operation, and must be automatically deactivated and the red lamps must be automatically activated when the bus entrance door is opened.
	2 Red plus 2 amber optional.	On the rear cab as far apart as practicable, but in no case shall the spacing between lamps be less than 40 inches. Amber lamps, when installed, at the same height as and just inboard of the red lamp.	As high as practicable but at least above the top of any side window opening.	Flashing alternately between 60 to 120 cycles per minute, with an activation period sufficient to allow the lamp to reach full brightness, when actuated by a manual switch. Amber lamps, when installed, may only be activated by manual or foot operation, and must be automatically deactivated and the red lamps must be automatically activated when the bus entrance door is opened.
Daytime Running Lamps Permitted But Not Required on Passenger Cars, Multipurpose Passenger Vehicles (MPV), Trucks, and Buses				
Daytime running lamp (DRL).	2 identically colored either white, white to yellow, white to selective yellow, selective yellow, or yellow.	On the front, symmetrically disposed about the vertical centerline if not a pair of lamps required by this standard or if not optically combined with a pair of lamps required by this standard.	Not more than 1.067 meters above the road surface if not a pair of lamps required by this standard or if not optically combined with a pair of lamps required by this standard. See S7.10.13(b) for additional height limitation.	Steady burning. Automatically activated as determined by the vehicle manufacturer and automatically deactivated when the headlamp control is in any ''on'' position. Each DRL optically combined with a turn signal lamp must be automatically deactivated as a DRL when the turn signal lamp or hazard warning lamp is activated, and automatically reactivated as a DRL when the turn signal lamp or hazard warning lamp is deactivated. See S7.10.10.1(c) for additional activation requirements when mounted close to, or combined with, a turn signal lamp.

TABLE I–b.—REQUIRED LAMPS AND REFLECTIVE DEVICES

Lighting device	Number and color	Mounting location	Mounting height	Device activation
All Trailers				
Turn Signal Lamps	2 Red or amber	On the rear, at the same height, symmetrically about the vertical centerline, as far apart as practicable.	Not less than 15 inches, nor more than 83 inches.	Flash when the turn signal flasher is actuated by the turn signal operating unit.
Taillamps	2 Red or 1 red on trailers less than 30 inches wide.	On the rear, at the same height, symmetrically about the vertical centerline, as far apart as practicable. When a single lamp is installed it must be mounted at or near the vertical centerline.	Not less than 15 inches, nor more than 72 inches.	Steady burning.
Stop Lamps	2 Red, or 1 red on trailers less than 30 inches wide.	On the rear, at the same height, symmetrically about the vertical centerline, as far apart as practicable. When a single lamp is installed it must be mounted at or near the vertical centerline.	Not less than 15 inches, nor more than 72 inches.	Steady burning. Must be activated upon application of the service brakes. When optically combined with a turn signal lamp, the circuit must be such that the stop signal cannot be activated if the turn signal lamp is flashing. May also be activated by a device designed to retard the motion of the vehicle.
Side Marker Lamps	2 Amber. None required on trailers less than 1829 mm [6 ft] in overall length including the trailer tongue. 2 Red	On each side as far to the front as practicable exclusive of the trailer tongue. On each side as far to the rear as practicable.	Not less than 15 inches. Not less than 15 inches. Not more than 60 inches on trailers 2032 mm or more in overall width.	Steady burning except may be flashed for signaling purposes.
Reflex Reflectors. A trailer equipped with a conspicuity treatment in conformance with S8.2 of this standard need not be equipped with reflex reflectors if the conspicuity material is placed at the locations of the required reflex reflectors.	2 Amber. None required on trailers less than 1829 mm [6 ft] in overall length including the trailer tongue. 2 Red 2 Red or 1 red on trailers less than 30 inches wide	On each side as far to the front as practicable exclusive of the trailer tongue. On each side as far to the rear as practicable. On the rear, at the same height, symmetrically about the vertical centerline, as far apart as practicable. When a single reflector is installed it must be mounted at or near the vertical centerline.	Not less than 15 inches, nor more than 60 inches.	Not applicable.
License Plate Lamp	1 White Additional lamps permitted to meet requirements.	On the rear to illuminate license plate from top or sides.	No requirement	Steady burning.

TABLE I–b.—REQUIRED LAMPS AND REFLECTIVE DEVICES—Continued

Lighting device	Number and color	Mounting location	Mounting height	Device activation
Additional Lamps and Reflective Devices Required on all Trailers 30 Feet or Longer				
Intermediate side marker lamps.	2 Amber	On each side located at or near the midpoint between the front and rear side marker lamps.	Not less than 15 inches	Steady burning except may be flashed for signaling purposes.
Intermediate side reflex reflectors. A trailer equipped with a conspicuity treatment in conformance with S8.2 of this standard need not be equipped with reflex reflectors if the conspicuity material is placed at the locations of the required reflex reflectors.	2 Amber	On each side located at or near the midpoint between the front and rear side reflex reflectors.	Not less than 15 inches, nor more than 60 inches.	Not applicable.
Additional Lamps Required on all Trailers 2032 MM or More in Overall Width				
Clearance lamps	2 Amber	On the front to indicate the overall width of the vehicle, at the same height, symmetrically about the vertical centerline. May be located at a location other than the front if necessary to indicate the overall width of the vehicle, or for protection from damage during normal operation of the vehicle.	As near the top as practicable.	Steady burning.
	2 Red	On the rear to indicate the overall width of the vehicle, at the same height, symmetrically about the vertical centerline. May be located at a location other than the rear if necessary to indicate the overall width of the vehicle, or for protection from damage during normal operation of the vehicle.	As near the top as practicable, except where the rear identification lamps are mounted at the extreme height of the vehicle. Practicability of locating lamps on the vehicle header is presumed when the header extends at least 25 mm (1 inch) above the rear doors.	Steady burning.

TABLE I–b.—REQUIRED LAMPS AND REFLECTIVE DEVICES—Continued

Lighting device	Number and color	Mounting location	Mounting height	Device activation
	2 Amber to front and red to rear.	On a boat trailer the requirement for front and rear clearance lamps may be met by installation at or near the midpoint on each side of a dual facing lamp so as to indicate the extreme width. May be located at a location other than the front and the rear if necessary to indicate the overall width of the vehicle, or for protection from damage during normal operation of the vehicle.	As near the top as practicable.	Steady burning.
Identification lamps	3 Red	On the rear, at the same height, as close as practicable to the vertical centerline, with lamp centers spaced not less than 6 inches or more than 12 inches apart.	As near the top as practicable. Practicability of locating lamps on the vehicle header is presumed when the header extends at least 25 mm (1 inch) above the rear doors.	Steady burning.

TABLE I–c.—REQUIRED LAMPS AND REFLECTIVE DEVICES

Lighting device	Number and color	Mounting location	Mounting height	Device activation
All Motorcycles				
Lower Beam Headlamps.	White, of a headlighting system listed in S10.17.	On the front, at the same height, symmetrically about the vertical centerline, as far apart as practicable. See additional requirements in S6.1.4.2.1.3, S10.17.1.1, S10.17.1.2, and S10.17.1.3.	Not less than 55.9 cm nor more than 137.2 cm	The wiring harness or connector assembly of each headlighting system must be designed so that only those light sources intended for meeting lower beam photometrics are energized when the beam selector switch is in the lower beam position, and that only those light sources intended for meeting upper beam photometrics are energized when the beam selector switch is in the upper beam position, except for certain systems listed in Table II. Steady burning, except that may be flashed for signaling purposes. The upper beam or the lower beam, but not both, may be wired to modulate from a higher intensity to a lower intensity in accordance with S10.17.5.
Upper Beam Headlamps.	White, of a headlighting system listed in S10.17.	On the front, at the same height, symmetrically about the vertical centerline, as far apart as practicable.	Not less than 55.9 cm nor more than 137.2 cm.	

TABLE I–c.—REQUIRED LAMPS AND REFLECTIVE DEVICES—Continued

Lighting device	Number and color	Mounting location	Mounting height	Device activation
Turn Signal Lamps	2 Amber. None required on a motor driven cycle whose speed attainable in 1 mile is 30 mph or less.	At or near the front, at the same height, symmetrically about the vertical centerline, and having a minimum horizontal separation distance (centerline of lamps) of 16 inches. Minimum edge to edge separation distance between a turn signal lamp and headlamp is 4 inches.	Not less than 15 inches, nor more than 83 inches.	Flash when the turn signal flasher is actuated by the turn signal operating unit.
	2 Amber or red. None required on a motor driven cycle whose speed attainable in 1 mile is 30 mph or less.	At or near the rear, at the same height, symmetrically about the vertical centerline, and having a minimum horizontal separation distance (centerline to centerline of lamps) of 9 inches. Minimum edge to edge separation distance the turn signal lamp and the taillamp or stop lamp is 4 inches, when a single stop and taillamp is installed on the vertical centerline and the turn signal lamps are red.		
Taillamps	1 Red	On the rear, on the vertical centerline except that if two are used, they must be symmetrically disposed about the vertical centerline.	Not less than 15 inches, nor more than 72 inches.	Steady burning. Must be activated when the headlamps are activated in a steady burning state.
Stop Lamps	1 Red	On the rear, on the vertical centerline except that if two are used, they must be symmetrically disposed about the vertical centerline.	Not less than 15 inches, nor more than 72 inches.	Steady burning. Must be activated upon application of the service brakes. When optically combined with a turn signal lamp, the circuit must be such that the stop signal cannot be activated if the turn signal lamp is flashing. May also be activated by a device designed to retard the motion of the vehicle.
Reflex Reflectors	2 Amber	On each side as far to the front as practicable.	Not less than 15 inches, nor more than 60 inches.	Not applicable.
	2 Red	On each side as far to the rear as practicable.		
	1 Red	On the rear, on the vertical centerline except that, if two are used on the rear, they must be symmetrically disposed about the vertical centerline.		
License Plate Lamp ...	1 White. Additional lamps permitted to meet requirements.	On the rear to illuminate license plate.	No requirement.	Steady burning. Must be activated when the headlamps are activated in a steady burning state.

BILLING CODE 4910–59–P

TABLE II-a: HEADLIGHTING SYSTEMS-SEALED BEAMS

SYSTEM DESIGNATION	UNIT NOMINAL SIZE	NUMBER OF HEADLAMPS	HEADLAMP DESIGNATION	BEAM COMPOSITION	PHOTOMETRY REQUIREMENTS REFERENCE			MAXIMUM FILAMENT POWER AT 12.8 V	
					TABLE XVIII	TABLES XIX-A, XIX-b, XIX-c			
					UPPER BEAM MECHANICAL AND VISUAL AIM	LOWER BEAM MECH AIM	LOWER BEAM VISUAL AIM	UPPER BEAM	LOWER BEAM
TYPE A	100x165 mm	2	1A1	1 UB FILAMENT	UB4	N.A.	N.A.	55	N.A.
		2	2A1	1 UB & 1 LB FILAMENTS	UB5	LB4M	LB2V	43	65
TYPE B	142x200 mm	2	2B1	1 UB & 1 LB FILAMENTS	UB3	LB3M	LB3V	70	60
TYPE C	146 mm DIA.	2	1C1	1 UB FILAMENT	UB4	N.A.	N.A.	55	N.A.
		2	2C1	1 UB & 1 LB FILAMENTS	UB5	LB4M	LB2V	43	65
TYPE D	178 mm DIA.	2	2D1	1 UB & 1 LB FILAMENTS	UB3	LB3M	LB3V	65	55
TYPE E	100x165 mm	2	2E1	1 UB & 1 LB FILAMENTS	UB3	LB3M	LB3V	70	60
TYPE F[2]	92x150 mm	2	UF	1 UB FILAMENT	UB1	N.A.	N.A.	70	N.A.
		2	LF	1 LB FILAMENT	N.A[1]	LB1M[1]	LB1V[1]	N.A.	60
TYPE G		2	1G1	1 UB FILAMENT	UB4	N.A.	N.A.	55	N.A.
		2	2G1	1 UB & 1 LB FILAMENTS	UB5	LB4M	LB2V	43	65
TYPE H		2	2H1	1 UB & 1 LB FILAMENTS	UB3	LB3M	LB3V	70	60

[1] Headlamps marked "LF" may remain activated when headlamps marked "UF" are activated.

[2] Type F headlamps may be mounted on common or parallel seating and aiming planes to permit simultaneous aiming with restrictions. See S10.13.2.

TABLE II–b.—HEADLIGHTING SYSTEMS—COMBINATION

System designation	System composition	Photometry requirements reference		
		Table XVIII	Tables XIX–a, XIX–b, XIX–c	
		Upper beam mechanical and visual aim	Lower beam mech aim	Lower beam visual aim
2 LAMP SYSTEM	A COMBINATION OF TWO DIFFERENT HEADLAMPS CHOSEN FROM; TYPE F, AN INTEGRAL BEAM HEADLAMP, OR A REPLACEABLE BULB HEADLAMP.	UB2 (1)	LB2M (1)	LB2V (1)
4 LAMP SYSTEM	ANY COMBINATION OF FOUR DIFFERENT HEADLAMPS CHOSEN FROM; TYPE F, AN INTEGRAL BEAM HEADLAMP (3), OR A REPLACEABLE BULB HEADLAMP.	UB1	LB1M (2)	LB1V (2)

(1) Headlamps designed to conform to the photometry requirements of UB2 and LB2M or LB2V may allow the lower beam light source(s) to remain activated when an upper beam light source is activated if the lower beam light source(s) contribute to upper beam photometric compliance.
(2) Lower beams may remain activated when upper beams are activated.
(3) Beam contributor photometric allocation formula of S14.2.5.9 may apply.

TABLE II–c.—HEADLIGHTING SYSTEMS—INTEGRAL BEAMS

System designation	Beam composition	Photometry requirements reference		
		Table XVIII	Tables XIX–a, XIX–b, XIX–c	
		Upper beam mechanical and visual aim	Lower beam mech aim	Lower beam visual aim
2 LAMP SYSTEM	UPPER BEAM & LOWER BEAM	UB2 (1) OR UB3	LB2M (1) OR LB3M	LB2V (1) OR LB3V
4 LAMP SYSTEM	UPPER BEAM	UB4	N.A.	N.A.
	UPPER BEAM & LOWER BEAM	UB5	LB4M	LB2V
4 LAMP SYSTEM	UPPER BEAM (U)	UB1	N.A.	N.A.
	LOWER BEAM (L)	N.A.(2)	LB1M (2)	LB1V (2)
4 LAMP SYSTEM	UPPER BEAM	UB6	N.A.	N.A.
	LOWER BEAM	N.A.(3)	LB5M (3)	LB4V (3)
BEAM CONTRIBUTOR	UPPER BEAM & LOWER BEAM	UB1 (4)	LB1M (2)(4)	LB1V (2)(4)

(1) Headlamps designed to conform to the photometry requirements of UB2 and LB2M or LB2V may allow the lower beam light source(s) to remain activated when an upper beam light source is activated if the lower beam light source(s) contribute to upper beam photometric compliance.
(2) Lower beams may remain activated when upper beams are activated.
(3) Lower beams must remain activated when upper beams are activated.
(4) Beam contributor photometric allocation formula of S14.2.5.9 applies.

TABLE II–d.—HEADLIGHTING SYSTEMS—REPLACEABLE BULB

System designation	Light source composition	Photometry requirements reference		
		Table XVIII	Tables XIX–a, XIX–b, XIX–c	
		Upper beam mechanical and visual aim	Lower beam mech aim	Lower beam visual aim
2 LAMP SYSTEM	ANY DUAL FILAMENT TYPE, OTHER THAN HB2, USED ALONE OR WITH ANOTHER DUAL FILAMENT TYPE OTHER THAN HB2.	UB2 (1) OR UB3	LB2M (1) OR LB3M	LB2V (1) OR LB3V
2 LAMP SYSTEM	HB2 OR ANY SINGLE FILAMENT TYPE USED ALONE OR WITH ANY OTHER SINGLE OR DUAL FILAMENT TYPE.	UB2 (1) OR UB3	LB2M (1)	LB2V (1)
4 LAMP SYSTEM	ANY DUAL FILAMENT TYPE, OTHER THAN HB2, USED ALONE OR WITH ANOTHER DUAL FILAMENT TYPE OTHER THAN HB2.	UB1 (2) OR UB3	LB1M (2) OR LB3M	LB1V (2) OR LB3V
4 LAMP SYSTEM	HB2 OR ANY SINGLE FILAMENT TYPE USED ALONE OR WITH ANY OTHER SINGLE OR DUAL FILAMENT TYPE. (U & L).	UB1 (2)	LB1M (2)	LB1V (2)

(1) Headlamps designed to conform to the photometry requirements of UB2 and LB2M or LB2V may allow the lower beam light source(s) to remain activated when an upper beam light source is activated if the lower beam light source(s) contribute to upper beam photometric compliance.
(2) Lower beams may remain activated when upper beams are activated.

TABLE III.—MARKING REQUIREMENTS LOCATION

Lamp, reflective device, or other component	Marking	Marking location	Requirement
Headlamps, Beam Contributors, or Headlamp Replaceable Lens.	"DOT"	Lens	S6.5.1
	Optical axis marking	See requirement	S10.18.5
	Manufacturer name and/or trademark	Lens	S6.5.3
	Voltage	See requirement	S6.5.3
	Part number or trade number	See requirement	S6.5.3
Headlamp Replaceable Lens	Manufacturer identification	Lens	S13.3
	Headlamp identification		
Replaceable Bulb Headlamps	"U" or "L" (4 lamp system)	Lens	S10.15.4
	Replaceable bulb type	Lens	S6.5.4.3
Sealed Beam Headlamps	"Sealed Beam"	Lens	S6.5.3.3
	Type designation		
Integral Beam Headlamps	"U" or "L" (4 lamp system)	Lens	S10.14.4
Motorcycle Headlamps	"motorcycle"	Lens	S10.17.2
Visually/Optically Aimed Headlamps	"VOR" or "VOL" or "VO"	Lens	S10.18.9.6
Externally Aimed Headlamps	Aim pad location & "H" or "V"	Lens	S10.18.7.1
Vehicle Headlamp Aiming Devices (VHAD)	Aiming scale(s)	See requirement	S10.18.8
(Headlamp) Replaceable Light Sources	"DOT"	See requirement	S11.1
	Replaceable light source designation	See requirement.	
	Manufacturer name and/or trademark	See requirement.	
Replaceable Light Source Ballasts	Manufacturer name or logo	See requirement	S11.2
	Part number.		
	Light source identification.		
	Rated laboratory life.		
	High voltage warning.		
	Output in watts and volts.		
	"DOT".		
Lamps (Other Than Headlamps), Reflective Devices, and Associated Equipment.	"DOT"	See requirement	S6.5.1.2
Daytime Running Lamps (DRL)	"DRL"	Lens	S6.5.2
Conspicuity Reflex Reflectors	"DOT–C"	Exposed surface	S8.2.2.1
Retroreflective Sheeting	"DOT–C2" or "DOT–C3" or "DOT–C4"	Exposed surface	S8.2.1.3

TABLE IV–a.—EFFECTIVE PROJECTED LUMINOUS LENS AREA REQUIREMENTS

Lighting device	Passenger cars, multipurpose passenger vehicles, trucks, trailers, and buses of less than 2032 MM in overall width—Minimum effective projected luminous lens area (sq mm)			Multipurpose passenger vehicles, trucks, trailers, and buses 2032 MM or more in overall width—Minimum effective projected luminous lens area each lamp (sq mm)	Motorcycles—Minimum effective projected luminous lens area (sq mm)
	Single compartment lamp	Multiple compartment lamp or multiple lamps			
		Each compartment or lamp	Combined compartments or lamps		
Front turn signal lamp	2200	—	2200	7500	2258
Rear turn signal lamp	5000	2200	5000	7500	2258
Stop lamp	5000	2200	5000	7500	(1)5000

(1) A motor driven cycle whose speed attainable in 1 mile is 30 mph or less may be equipped with a stop lamp whose minimum effective projected luminous lens area is not less than 2258 sq mm.

TABLE IV–b.—EFFECTIVE PROJECTED LUMINOUS LENS AREA REQUIREMENTS

Lighting device	Passenger cars, multipurpose passenger vehicles, trucks, and buses of less than 2032 MM in overall width and with a GVWR of 10,000 lbs or less using a single lamp—Minimum effective projected luminous lens area (sq mm)	Multipurpose passenger vehicles, trucks, and buses of less than 2032 MM in overall width and with a GVWR of 10,000 lbs or less using dual lamps of identical size and shape—Minimum effective projected luminous lens area each lamp (sq mm)
High-mounted stop lamp	2903	1452

TABLE IV–c.—EFFECTIVE PROJECTED LUMINOUS LENS AREA REQUIREMENTS

Lighting device	School bus—Minimum effective projected luminous lens area each lamp (sq mm)
School bus signal lamp	12,258

TABLE V–a.—VISIBILITY REQUIREMENTS OF INSTALLED LIGHTING DEVICES

Lighting device	Required visibility
Backup lamp	Lamps must be mounted so that the optical center of at least one lamp is visible from any eye point elevation from at least 1828 mm to 610 mm above the horizontal plane on which the vehicle is standing; and from any position in the area, rearward of a vertical plane perpendicular to the longitudinal axis of the vehicle, 914 mm to the rear of the vehicle and extending 914 mm beyond each side of the vehicle.
High-mounted stop lamp	Signal must be visible to the rear through a horizontal angle from 45° to the left to 45° to the right of the longitudinal axis of the vehicle. (Single lamp or two lamps together where required by S6.1.1.2 of this standard)
School bus signal lamp	Signal of front lamps to the front and rear lamps to the rear must be unobstructed within area bounded by 5° up to 10° down and 30° left to 30° right.

TABLE V–b.—VISIBILITY REQUIREMENTS OF INSTALLED LIGHTING DEVICES—LENS AREA VISIBILITY OPTION

Lighting device	Corner points (1) (2)		Required visibility
Turn signal lamp (3)	15°UP–45° IB	15 UP–45° OB	Unobstructed minimum effective projected luminous lens area of 1250 sq mm in any direction throughout the pattern defined by the specified corner points.
Stop lamp	15° DOWN–45° IB	15° DOWN—45° OB	
Taillamp	15° UP–45° IB	15° UP–45° OB	
Parking lamp	15° DOWN–45° IB	15° DOWN–45° OB	
	15° UP–45° IB	15° UP–45° OB	
	15° DOWN–45° IB	15° DOWN–45° OB	
	15° UP–45° IB	15° UP–45° OB	
	15° DOWN–45° IB	15° DOWN–45° OB	

(1) IB indicates an inboard direction (toward the vehicle's longitudinal centerline) and OB indicates an outboard direction.
(2) Where a lamp is mounted with its axis of reference less than 750 mm above the road surface, the vertical test point angles located below the horizontal plane subject to visibility requirements may be reduced to 5° down.
(3) Where more than one lamp or optical area is lighted at the front on each side of a multipurpose passenger vehicle, truck, trailer, or bus, of 2032 mm or more overall width, only one such area need comply.

TABLE V–c.—VISIBILITY REQUIREMENTS OF INSTALLED LIGHTING DEVICES—LUMINOUS INTENSITY VISIBILITY OPTION

Lighting device	Corner points (1) (2)		Required visibility—Minimum luminous intensity in any direction throughout the pattern defined by the specified corner points. Candela
Turn signal lamp	15° UP–45° IB	15° UP–80° OB	0.3
	15° DOWN–45° IB	15° DOWN–80° OB.	
Stop lamp	15° UP–45° IB	15° UP–45° OB	0.3
	15° DOWN–45° IB	15° DOWN–45° OB.	
Taillamp (3)	15° UP–45° IB	15° UP–80° OB	0.05
	15° DOWN–45° IB	15° DOWN–80° OB.	
Parking lamp	15° UP–45° IB	15° UP–80° OB	0.05
	15° DOWN–45° IB	15° DOWN–80° OB.	

(1) IB indicates an inboard direction (toward the vehicle's longitudinal centerline) and OB indicates an outboard direction.
(2) Where a lamp is mounted with its axis of reference less than 750 mm above the road surface, the vertical test point angles located below the horizontal plane subject to visibility requirements may be reduced to 5° down.
(3) Inboard and outboard corner points are 80° for a single taillamp installed on a motorcycle.

TABLE V–d.—VISIBILITY REQUIREMENTS OF INSTALLED LIGHTING DEVICES (LEGACY VISIBILITY ALTERNATIVE)

Lighting device	Required visibility [1]
Turn signal lamp:	
All passenger cars, multipurpose passenger vehicles, trucks, buses, motorcycles, and trailers of less than 2032 mm overall width.	Unobstructed minimum effective projected luminous lens area of 1250 sq mm through horizontal angle of H–V to H–45° OB.

TABLE V–d.—VISIBILITY REQUIREMENTS OF INSTALLED LIGHTING DEVICES (LEGACY VISIBILITY ALTERNATIVE)—Continued

Lighting device	Required visibility [1]
All multipurpose passenger vehicles, trucks, buses, and trailers of 2032 mm or more overall width.	Unobstructed minimum effective projected luminous lens area of 1300 sq mm through horizontal angle of H–V to H–45° OB. Where more than one lamp or optical area is lighted on each side of the vehicle, only one such area on each side need comply.
Stop lamp	Unobstructed minimum effective projected luminous lens area of 1250 sq mm through horizontal angle of H–45° IB to H–45° OB. Where more than one lamp or optical area is lighted on each side of the vehicle, only one such area on each side need comply.
Taillamp	Unobstructed minimum effective projected luminous lens area of 2 sq in through horizontal angle of H–45° IB to H–45° OB. Where more than one lamp or optical area is lighted on each side of the vehicle, only one such area on each side need comply.

(1) IB indicates an inboard direction (toward the vehicle's longitudinal centerline) and OB indicates an outboard direction.

BILLING CODE 4910–59–P

TABLE VI-a: FRONT TURN SIGNAL LAMP PHOTOMETRY REQUIREMENTS

GROUP NUMBER	TEST POINT (degrees)		MINIMUMPHOTOMETRIC INTENSITY RATIO WHERE COMBINED WITH A :		BASE REQUIREMENTS						2.5X BASE REQUIREMENTS					
					MINIMUM PHOTOMETRIC INTENSITY[1][2] (cd)			GROUP MINIMUM PHOTOMETRIC INTENSITY (cd)			MINIMUM PHOTOMETRIC INTENSITY[1][2] (cd)			GROUP MINIMUM PHOTOMETRIC INTENSITY (cd)		
			PARKING LAMP	CLEARANCE LAMP[4]	Lighted Sections			Lighted Sections			Lighted Sections			Lighted Sections		
					1	2	3	1	2	3	1	2	3	1	2	3
1	20L	5U	3	3	25	30	35	130	155	180	62.5	75	87.5	325	387.5	450
		5D	-	3	25	30	35				62.5	75	87.5			
	5L	10U	3	3	40	48	55				100	120	137.5			
		10D[3]	-	3	40	48	55				100	120	137.5			
2	10L	5U	3	3	75	88	100	250	295	340	187.5	220	250	625	737.5	850
		H	3	3	100	120	140				250	300	350			
		5D	-	3	75	88	100				187.5	220	250			
3	V	5U	5	5	175	205	235	950	1130	1295	437.5	512.5	587.5	2375	2825	3237.5
	5L	H	5	5	200	240	275				500	600	687.5			
	V		5	5	200	240	275				500	600	687.5			
	5R		5	5	200	240	275				500	600	687.5			
	V	5D	-	3	175	205	235				437.5	512.5	587.5			
4	10R	5U	3	3	75	88	100	250	295	340	187.5	220	250	625	737.5	850
		H	3	3	100	120	140				250	300	350			
		5D	-	3	75	88	100				187.5	220	250			
5	5R	10U	3	3	40	48	55	130	155	180	100	120	137.5	325	387.5	450
		10D[3]	-	3	40	48	55				100	120	137.5			
	20R	5U	3	3	25	30	35				62.5	75	87.5			
		5D	-	3	25	30	35				62.5	75	87.5			

(1) The measured values at each test point must not be less than 60% of the minimum value.

(2) The photometric intensity values between test points must not be less than the lower specified minimum value of the two closest adjacent test points on a horizontal or vertical line.

(3) Where turn signal lamps are mounted with their axis of reference less than 750 mm above the road surface, photometry requirements below 5° down may be met at 5° down rather than at the specified required downward angle.

(4) When a clearance lamp on a vehicle 2032 mm or more in overall width is combined with a front turn signal lamp and the maximum luminous intensity of the clearance lamp is located below horizontal and within a 1.0° radius around the test point, the ratio for the test point may be computed by using the lowest value of the clearance lamp luminous intensity within the generated area.

TABLE VI-b: FRONT TURN SIGNAL LAMP PHOTOMETRY REQUIREMENTS

GROUP NUMBER	TEST POINT (degrees)		MINIMUM PHOTOMETRIC INTENSITY RATIO WHERE COMBINED WITH A :		2 X BASE REQUIREMENTS						1.5X BASE REQUIREMENTS					
					MINIMUM PHOTOMETRIC INTENSITY[1][2] (cd)			GROUP MINIMUM PHOTOMETRIC INTENSITY (cd)			MINIMUM PHOTOMETRIC INTENSITY[1][2] (cd)			GROUP MINIMUM PHOTOMETRIC INTENSITY (cd)		
			PARKING LAMP	CLEARANCE LAMP[4]	Lighted Sections			Lighted Sections			Lighted Sections			Lighted Sections		
					1	2	3	1	2	3	1	2	3	1	2	3
1	20L	5U	3	3	50	60	70	260	310	360	37.5	45	52.5	195	232.5	270
		5D	-	3	50	60	70				37.5	45	52.5			
	5L	10U	3	3	80	96	110				60	72	82.5			
		10D[3]	-	3	80	96	110				60	72	82.5			
2	10L	5U	3	3	150	176	200	500	590	680	112.5	132	150	375	442.5	510
		H	3	3	200	240	280				150	180	210			
		5D	-	3	150	176	200				112.5	132	150			
3	V	5U	5	5	350	410	470	1900	2260	2590	262.5	307.5	352.5	1425	1695	1942.5
	5L	H	5	5	400	480	550				300	360	412.5			
	V		5	5	400	480	550				300	360	412.5			
	5R		5	5	400	480	550				300	360	412.5			
	V	5D	-	3	350	410	470				262.5	307.5	352.5			
4	10R	5U	3	3	150	176	200	500	590	680	112.5	132	150	375	442.5	510
		H	3	3	200	240	280				150	180	210			
		5D	-	3	150	176	200				112.5	132	150			
5	5R	10U	3	3	80	96	110	260	310	360	60	72	82.5	195	232.5	270
		10D[3]	-	3	80	96	110				60	72	82.5			
	20R	5U	3	3	50	60	70				37.5	45	52.5			
		5D	-	3	50	60	70				37.5	45	52.5			

(1) The measured values at each test point must not be less than 60% of the minimum value.

(2) The photometric intensity values between test points must not be less than the lower specified minimum value of the two closest adjacent test points on a horizontal or vertical line.

(3) Where turn signal lamps are mounted with their axis of reference less than 750 mm above the road surface, photometry requirements below 5° down may be met at 5° down rather than at the specified required downward angle.

(4) When a clearance lamp on a vehicle 2032 mm or more in overall width is combined with a front turn signal lamp and the maximum luminous intensity of the clearance lamp is located below horizontal and within a 1.0° radius around the test point, the ratio for the test point may be computed by using the lowest value of the clearance lamp luminous intensity within the generated area.

TABLE VII: REAR TURN SIGNAL LAMP PHOTOMETRY REQUIREMENTS

GROUP NUMBER	TEST POINT (degrees)		TEST POINTS APPLICABLE TO DOUBLE FACED LAMPS[6]		MINIMUM PHOTOMETRIC INTENSITY RATIO WHERE COMBINED WITH A TAIL LAMP OR CLEARANCE LAMP[7][8]	MINIMUM PHOTOMETRIC INTENSITY[1][2] (cd) RED LAMPS			GROUP MINIMUM PHOTOMETRIC INTENSITY (cd) RED LAMPS			MINIMUM PHOTOMETRIC INTENSITY[1][2] (cd) AMBER LAMPS			GROUP MINIMUM PHOTOMETRIC INTENSITY (cd) AMBER LAMPS		
						Lighted Sections			Lighted Sections			Lighted Sections			Lighted Sections		
			LEFT SIDE LAMP	RIGHT SIDE LAMP		1	2	3	1	2	3	1[5]	2	3	1[5]	2	3
1	20L	5U	NO	YES	3	10	12	15	50	60	70	15	20	25	80/84	100	120
		5D	NO	YES	3	10	12	15				15	20	25			
	5L	10U	NO	YES	3	16	19	22				26/27	30	35			
		10D[3]	NO	YES	3	16	19	22				26/27	30	35			
2	10L	5U	NO	YES	3	30	35	40	100	115	135	50	55	65	165	185	220
		H	NO	YES	3	40	47	55				65	75	90			
		5D	NO	YES	3	30	35	40				50	55	65			
3	V	5U	YES	YES	5	70	82	95	380	445	520	110	130	150	610/590	710	825
	5L	H	NO	YES	5	80	95	110				130/120	150	175			
	V		YES	YES	5	80	95	110				130	150	175			
	5R		YES	NO	5	80	95	110				130/120	150	175			
	V	5D	YES	YES	3	70	82	95				110	130	150			
4	10R	5U	YES	NO	3	30	35	40	100	115	135	50	55	65	165	185	220
		H	YES	NO	3	40	47	55				65	75	90			
		5D	YES	NO	3	30	35	40				50	55	65			
5	5R	10U	YES	NO	3	16	19	22	50	60	70	26/27	30	35	80/84	100	120
		10D[3]	YES	NO	3	16	19	22				26/27	30	35			
	20R	5U	YES	NO	3	10	12	15				15	20	25			
		5D	YES	NO	3	10	12	15				15	20	25			
MAXIMUM PHOTOMETRIC INTENSITY[4]						300	360	420				750	900	900			

(1) The measured values at each test point must not be less than 60% of the minimum value.

(2) The photometric intensity values between test points must not be less than the lower specified minimum value of the two closest adjacent test points on a horizontal or vertical line.

(3) Where turn signal lamps are mounted with their axis of reference less than 750 mm above the road surface, photometry requirements below 5° down may be met at 5° down rather than at the required downward angle.

(4) The maximum photometric intensity must not occur over any area larger than that generated by a 0.5° radius within a solid angle defined by the test point range

(5) Values preceded by a slash (/) apply only to multipurpose passenger vehicles, trucks, trailers, and buses of 2032 mm or more in overall width.

(6) A double faced turn signal lamp installed as described in S6.1.1.3 on a truck tractor need only meet the photometric requirements for a left side lamp where the lamp is mounted on the left side of the vehicle, and for a right side lamp where the lamp is mounted on the right side of the vehicle.

(7) Required only when combined turn signal lamp and clearance lamp is installed on a vehicle 2032 mm or more in overall width.

(8) When a taillamp (or clearance lamp on a vehicle 2032 mm or more in overall width) is combined with a rear turn signal lamp and the maximum luminous intensity of the taillamp (or clearance lamp) is located below horizontal and within an area generated by a 0.5° radius around a test point (1.0° radius on lamps installed on a vehicle 2032 mm or more in overall width), the ratio for the test point may be computed by using the lowest value of the taillamp (or clearance lamp) luminous intensity within the generated area.

TABLE VIII: TAILLAMP PHOTOMETRY REQUIREMENTS

GROUP NUMBER	TEST POINT (degrees)		PHOTOMETRIC INTENSITY[1][2][4] (cd)						GROUP MINIMUM PHOTOMETRIC INTENSITY[1][2] (cd)		
			Lighted Sections						Lighted Sections		
			1		2		3		1	2	3
			MINIMUM	MAXIMUM	MINIMUM	MAXIMUM	MINIMUM	MAXIMUM			
1	20L	5U	0.3	18	0.5	20	0.7	25	1.4	2.4	3.5
		5D	0.3	-	0.5	-	0.7	-			
	5L	10U	0.4	18	0.7	20	1.0	25			
		10D[3]	0.4	-	0.7	-	1.0	-			
2	10L	5U	0.8	18	1.4	20	2.0	25	2.4	4.2	6.0
		H	0.8	18	1.4	20	2.0	25			
		5D	0.8	-	1.4	-	2.0	-			
3	V	5U	1.8	18	3.1	20	4.5	25	9.6	16.8	24.0
	5L	H	2.0	18	3.5	20	5.0	25			
	V		2.0	18	3.5	20	5.0	25			
	5R		2.0	18	3.5	20	5.0	25			
	V	5D	1.8	-	3.1	-	4.5	-			
4	10R	5U	0.8	18	1.4	20	2.0	25	2.4	4.2	6.0
		H	0.8	18	1.4	20	2.0	25			
		5D	0.8	-	1.4	-	2.0	-			
5	5R	10U	0.4	18	0.7	20	1.0	25	1.4	2.4	3.5
		10D[3]	0.4	-	0.7	-	1.0	-			
	20R	5U	0.3	18	0.5	20	0.7	25			
		5D	0.3	-	0.5	-	0.7	-			

(1) The photometric intensity values between test points must not be less than the lower specified minimum value of the two closest adjacent test points on a horizontal or vertical line.

(2) If the sum of intensity values for all points in the zone is not less than the specified total value for the zone, the measured intensity value for each individual test point is not required to meet the minimum value.

(3) Where taillamps are mounted with their axis of reference less than 750 mm above the road surface, photometry requirements below 5° down may be met at 5° down rather than at the specified required downward angle.

(4) A taillamp shall not exceed the maximum intensity over any area larger than that generated by a 0.25° radius, within a solid cone angle from 20°L to 20°R and from H to 10°U.

TABLE IX: STOP LAMP PHOTOMETRY REQUIREMENTS

GROUP NUMBER	TEST POINT (degrees)		MINIMUM PHOTOMETRIC INTENSITY RATIO WHERE COMBINED WITH A TAIL LAMP[5]	MINIMUM PHOTOMETRIC INTENSITY[1][2] (cd) Lighted Sections			GROUP MINIMUM PHOTOMETRIC INTENSITY (cd) Lighted Sections		
				1	2	3	1	2	3
1	20L	5U	3	10	12	15	50	60	70
		5D	3	10	12	15			
	5L	10U	3	16	19	22			
		10D[4]	3	16	19	22			
2	10L	5U	3	30	35	40	100	115	135
		H	3	40	47	55			
		5D	3	30	35	40			
3	V	5U	5	70	82	95	380	445	520
	5L	H	3/5[6]	80	95	110			
	V		5	80	95	110			
	5R		5	80	95	110			
	V	5D	3	70	82	95			
4	10R	5U	3	30	35	40	100	115	135
		H	3	40	47	55			
		5D	3	30	35	40			
5	5R	10U	3	16	19	22	50	60	70
		10D[4]	3	16	19	22			
	20R	5U	3	10	12	15			
		5D	3	10	12	15			
MAXIMUM PHOTOMETRIC INTENSITY[3]				300	360	420			

(1) The measured values at each test point must not be less than 60% of the minimum value.

(2) The photometric intensity values between test points must not be less than the lower specified minimum value of the two closest adjacent test points on a horizontal or vertical line.

(3) The maximum photometric intensity must not occur over any area larger than that generated by a 0.5° radius within a solid angle defined by the test point range

(4) Where stop lamps are mounted with their axis of reference less than 750 mm above the road surface, photometry requirements below 5° down may be met at 5° down rather than at the specified required downward angle.

(5) When a taillamp is combined with a stop lamp and the maximum luminous intensity of the taillamp is located below horizontal and within an area generated by a 0.5° radius around a test point (1.0° radius on lamps installed on a vehicle 2032 mm or more in overall width), the ratio for the test point may be computed by using the lowest value of the taillamp luminous intensity within the generated area.

(6) Values preceded by a slash (/) apply only to lamps installed on multipurpose passenger vehicles, trucks, trailers, and buses of 2032 mm or more in overall width.

TABLE X.—SIDE MARKER LAMP PHOTOMETRY REQUIREMENTS

Test point (degrees)	Minimum photometric intensity (cd) [2] red lamps	Minimum photometric intensity (cd) [2] amber lamps
10U:		
45L [1]	0.25	0.62
V	0.25	0.62
45R [1]	0.25	0.62
H:		
45L [1]	0.25	0.62
V	0.25	0.62
45R [1]	0.25	0.62
10D: [3]		
45L [1]	0.25	0.62
V	0.25	0.62
45R [1]	0.25	0.62

[1] Where a side marker lamp installed on a motor vehicle less than 30 feet in overall length and less than 80 inches (2 m) in overall width has the lateral angle nearest the other required side marker lamp on the same side of the vehicle reduced from 45° by design as specified by S7.4.13.2, the photometric intensity measurement may be met at the lesser angle.

[2] The photometric intensity values between test points must not be less than the lower specified minimum value of the two closest adjacent test points on a horizontal or vertical line.

[3] Where side marker lamps are mounted with their axis of reference less than 750 mm above the road surface, photometry requirements below 5° down may be met at 5° down rather than at the specified required downward angle.

TABLE XI.—CLEARANCE AND IDENTIFICATION LAMPS PHOTOMETRY REQUIREMENTS

Test point (degrees)	Minimum photometric intensity (cd) [2] red lamps	Minimum photometric intensity (cd) [2] amber lamps
10U:		
45L [4]	0.25	0.62
V	0.25	0.62
45R [4]	0.25	0.62
H:		
45L [4]	0.25	0.62
V	0.25	0.62
45R [4]	0.25	0.62
10D: [1]		
45L [4]	0.25	0.62
V	0.25	0.62
45R [4]	0.25	0.62
Maximum photometric intensity [3] (cd) red lamps	15	

[1] Where clearance lamps or identification lamps are mounted with their axis of reference less than 750mm above the road surface, photometry requirements below 5° down may be met at 5° down rather than at the specified required downward angle.

[2] The photometric intensity values between test points must not be less than the lower specified minimum value of the two closest adjacent test points on a horizontal or vertical line.

[3] When optically combined with a stop lamp or turn signal lamp, this maximum applies on or above the horizontal.

[4] Where clearance lamps are installed at locations other than on the front and rear due to the necessity to indicate the overall width of the vehicle, or for protection from damage during normal operation of the vehicle, they need not meet the photometric intensity requirement at any test point that is 45° inboard.

TABLE XII: BACKUP LAMP PHOTOMETRY REQUIREMENTS

GROUP NUMBER	TEST POINT (degrees)		MAXIMUM PHOTOMETRIC INTENSITY (cd) ANY SINGLE LAMP	TWO LAMP SYSTEMS – EACH LAMP		SINGLE LAMP SYSTEM	
				MINIMUM PHOTOMETRIC INTENSITY (cd)[1][4]	GROUP MINIMUM PHOTOMETRIC INTENSITY (cd)	MINIMUM PHOTOMETRIC INTENSITY (cd)[1][4]	GROUP MINIMUM PHOTOMETRIC INTENSITY (cd)
1[2][3]	45L	5U	300	15	45	30	90
		H	300	15		30	
		5D	-	15		30	
2[2][3]	30L	H	300	25	50	50	100
		5D	-	25		50	
3	10L	10U	300	10	100	20	200
		5U	300	20		40	
	V	10U	300	15		30	
		5U	300	25		50	
	10R	10U	300	10		20	
		5U	300	20		40	
4	10L	H	300	50	360	100	720
		5D	-	50		100	
	V	H	300	80		160	
		5D	-	80		160	
	10R	H	300	50		100	
		5D	-	50		100	
5[2][3]	30R	H	300	25	50	50	100
		5D	-	25		50	
6[2][3]	45R	5U	300	15	45	30	90
		H	300	15		30	
		5D	-	15		30	

(1) The photometric intensity values between test points must not be less than the lower specified minimum value of the two closest adjacent test points on a horizontal or vertical line.

(2) When two lamps of the same or symmetrically opposite design are used, the tested photometric values along the vertical axis and the averages of the tested photometric values for the same horizontal test point left and right of vertical for one lamp must be used to determine compliance with the requirements.

(3) When two lamps of differing designs are used, they must be tested individually and the tested photometric values added to determine the combined units compliance with twice the stated requirements.

(4) If the sum of intensity values for all points in the zone is not less than the specified total value for the zone, the measured intensity value for each individual test point is not required to meet the minimum value.

TABLE XIII-a: MOTORCYCLE TURN SIGNAL LAMP ALTERNATIVE PHOTOMETRY REQUIREMENTS

GROUP NUMBER	TEST POINT (degrees)		MINIMUM PHOTOMETRIC INTENSITY RATIO WHERE COMBINED WITH A:		MINIMUM PHOTOMETRIC INTENSITY[1][2] (cd) FRONT TURN SIGNAL LAMP			GROUP MINIMUM PHOTOMETRIC INTENSITY (cd) FRONT TURN SIGNAL LAMP			MINIMUM PHOTOMETRIC INTENSITY[1][2] (cd) RED REAR TURN SIGNAL LAMP			GROUP MINIMUM PHOTOMETRIC INTENSITY[1][2] (cd) RED REAR TURN SIGNAL LAMP			MINIMUM PHOTOMETRIC INTENSITY[1][2] (cd) AMBER REAR TURN SIGNAL LAMP			GROUP MINIMUM PHOTOMETRIC INTENSITY (cd) AMBER REAR TURN SIGNAL LAMP		
			PARKING LAMP	TAIL LAMP[5]	Lighted Sections			Lighted Sections			Lighted Sections			Lighted Sections			Lighted Sections			Lighted Sections		
					1	2	3	1	2	3	1	2	3	1	2	3	1	2	3	1	2	3
1	20L	5U	3	3	12.5	15	17.5	65	77.5	90	5	6	7.5	25	30	35	7.5	10	12.5	40	50	60
		5D	-	3	12.5	15	17.5				5	6	7.5				7.5	10	12.5			
	5L	10U	3	3	20	24	27.5				8	9.5	11				13	15	17.5			
		10D[4]	-	3	20	24	27.5				8	9.5	11				13	15	17.5			
2	10L	5U	3	3	37.5	44	50	125	147.5	170	15	17.5	20	50	57.5	67.5	25	27.5	32.5	82.5	92.5	110
		H	3	3	50	60	70				20	23.5	27.5				32.5	37.5	45			
		5D	-	3	37.5	44	50				15	17.5	20				25	27.5	32.5			
3	V	5U	5	5	87.5	102.5	117.5	475	565	647.5	35	41	47.5	190	222.5	260	55	65	75	305	355	412.5
	5L	H	5	5	100	120	137.5				40	47.5	55				65	75	87.5			
	V		5	5	100	120	137.5				40	47.5	55				65	75	87.5			
	5R		5	5	100	120	137.5				40	47.5	55				65	75	87.5			
	V	5D	-	3	87.5	102.5	117.5				35	41	47.5				55	65	75			
4	10R	5U	3	3	37.5	44	50	125	147.5	170	15	17.5	20	50	57.5	67.5	25	27.5	32.5	82.5	92.5	110
		H	3	3	50	60	70				20	23.5	27.5				32.5	37.5	45			
		5D	-	3	37.5	44	50				15	17.5	20				25	27.5	32.5			
5	5R	10U	3	3	20	24	27.5	65	77.5	90	8	9.5	11	25	30	35	13	15	17.5	40	50	60
		10D[4]	-	3	20	24	27.5				8	9.5	11				13	15	17.5			
	20R	5U	3	3	12.5	15	17.5				5	6	7.5				7.5	10	12.5			
		5D	-	3	12.5	15	17.5				5	6	7.5				7.5	10	12.5			
MAXIMUM PHOTOMETRIC INTENSITY[3]											300	360	420				750	900	900			

(1) The measured values at each test point must not be less than 60% of the minimum value.

(2) The photometric intensity values between test points must not be less than the lower specified minimum value of the two closest adjacent test points on a horizontal or vertical line.

(3) The maximum photometric intensity must not occur over any area larger than that generated by a 0.5° radius within a solid angle defined by the test point range.

(4) Where turn signal lamps are mounted with their axis of reference less than 750 mm above the road surface, photometry requirements below 5° down may be met at 5° down rather than at the specified required downward angle.

(5) When a taillamp is combined with a rear turn signal lamp and the maximum luminous intensity of the taillamp is located below horizontal and within an area generated by a 0.5° radius around a test point the ratio for the test point may be computed by using the lowest value of the taillamp luminous intensity within the generated area.

TABLE XIII-b: MOTOR DRIVEN CYCLE STOP LAMP[3] ALTERNATIVE PHOTOMETRY REQUIREMENTS

GROUP NUMBER	TEST POINT (degrees)		MINIMUM PHOTOMETRIC INTENSITY RATIO WHERE A MOTOR DRIVEN CYCLE STOP LAMP IS COMBINED WITH A TAIL LAMP[4]	GROUP MINIMUM PHOTOMETRIC INTENSITY (cd) MOTOR DRIVEN CYCLE STOP LAMP		
				Lighted Sections		
				1	2	3
1	20L	5U	3	26	31	36
		5D	3			
	5L	10U	3			
		10D[2]	3			
2	10L	5U	3	50	59	69
		H	3			
		5D	3			
3	V	5U	5	190	226	261
	5L	H	5			
	V		5			
	5R		5			
	V	5D	3			
4	10R	5U	3	50	59	69
		H	3			
		5D	3			
5	5R	10U	3	26	31	36
		10D[2]	3			
	20R	5U	3			
		5D	3			
MAXIMUM PHOTOMETRIC INTENSITY[1]				300	360	420

(1) The maximum photometric intensity must not occur over any area larger than that generated by a 0.5° radius within a solid angle defined by the test point range.

(2) Where stop lamps are mounted with their axis of reference less than 750 mm above the road surface, photometry requirements below 5° down may be met at 5° down rather than at the specified required downward angle.

(3) Requirements for a motor-driven cycle whose speed attainable in 1 mile is 30 mph or less.

(4) When a taillamp is combined with a stop lamp and the maximum luminous intensity of the taillamp is located below horizontal and within an area generated by a 0.5° radius around a test point the ratio for the test point may be computed by using the lowest value of the taillamp luminous intensity within the generated area

TABLE XIV: PARKING LAMP PHOTOMETRY REQUIREMENTS

GROUP NUMBER	TEST POINT (degrees)		MINIMUM PHOTOMETRIC INTENSITY[1][2] (cd)	MAXIMUM PHOTOMETRIC INTENSITY (cd)	GROUP MINIMUM PHOTOMETRIC INTENSITY (cd)
1	20L	5U	0.4	125	2.4
		5D	0.4	250	
	5L	10U	0.8	125	
		10D[3]	0.8	250	
2	10L	5U	0.8	125	3.0
		H	1.4	125	
		5D	0.8	250	
3	V	5U	2.8	125	16.8
	5L	H	3.6	125	
	V		4.0	125	
	5R		3.6	125	
	V	5D	2.8	250	
4	10R	5U	0.8	125	3.0
		H	1.4	125	
		5D	0.8	250	
5	5R	10U	0.8	125	2.4
		10D[3]	0.8	250	
	20R	5U	0.4	125	
		5D	0.4	250	

[1] The photometric intensity values between test points must not be less than the lower specified minimum value of the two closest adjacent test points on a horizontal or vertical line.

[2] If the sum of intensity values for all points in the zone is not less than the specified total value for the zone, the measured intensity value for each individual test point is not required to meet the minimum value.

[3] Where parking lamps are mounted with their axis of reference less than 750 mm above the road surface, photometry requirements below 5° down may be met at 5° down rather than at the specified required downward angle.

TABLE XV: HIGH-MOUNTED STOP LAMP PHOTOMETRY REQUIREMENTS

GROUP NUMBER	TEST POINT (degrees)		MINIMUM PHOTOMETRIC INTENSITY[1][2][3] (cd)	GROUP MINIMUM PHOTOMETRIC INTENSITY[3] (cd)
1	5U	V	25	125
	H	5L	25	
	H	V	25	
	H	5R	25	
	5D	V	25	
2	5U	5R	25	98
	5U	10R	16	
	H	10R	16	
	5D	10R	16	
	5D	5R	25	
3	5U	5L	25	98
	5U	10L	16	
	H	10L	16	
	5D	10L	16	
	5D	5L	25	
4	10U	10L	8	32
	10U	V	16	
	10U	10R	8	
MAXIMUM PHOTOMETRIC INTENSITY[4]			160	

(1) The photometric intensity values between test points must not be less than the lower specified minimum value of the two closest adjacent test points on a horizontal or vertical line.

(2) The photometric intensity at each test point must not be less than 60%of the specified minimum value when considering overall group or zone photometry tables.

(3) Where a pair of lamps identical in size and shape are used due to vehicle construction, they together must meet photometric requirements.

(4) The maximum photometric intensity must not occur over any area larger than that generated by a 0.25° radius within a solid cone angle within the rectangle bounded by test points 10U-10L, 10U-10R, 5D-10L, and 5D-10R.

TABLE XVI–a.—REFLEX REFLECTOR PHOTOMETRY REQUIREMENTS

Observation angle (degrees)	Entrance angle (degrees)	Minimum performance					
		Red reflectors		Amber reflectors		White reflectors	
		(cd/incident ft-c)	(mcd/lux)	(cd/incident ft-c)	(mcd/lux)	(cd/incident ft-c)	(mcd/lux)
0.2	0	4.5	420	11.25	1050	18	1680
	10U	3.0	280	7.5	700	12	1120
	10D [1]	3.0	280	7.5	700	12	1120
	20L	1.5	140	3.75	350	6	560
	20R	1.5	140	3.75	350	6	560
1.5	0	0.07	6	0.175	15	0.28	24
	10U	0.05	5	0.125	12.5	0.2	20
	10D [1]	0.05	5	0.125	12.5	0.2	20
	20L	0.03	3	0.075	7.5	0.12	12
	20R	0.03	3	0.075	7.5	0.12	12

[1] Where reflex reflectors are mounted with their axis of reference less than 750 mm above the road surface, photometry requirements below 5° down may be met at 5° down rather than at the required specified downward angle.

TABLE XVI–b.—ADDITIONAL PHOTOMETRY REQUIREMENTS FOR CONSPICUITY REFLEX REFLECTORS

Observation angle (degrees)	Entrance angle (degrees)	Minimum performance		
		Red (mcd/lux)	White horizontal orientation (mcd/lux)	White vertical orientation (mcd/lux)
0.2	0	300	1250	1680
	20L TO 20R			560
	30L TO 30R	300	1250	
	45L TO 45R	75	300	
	10U TO 10D			1120

TABLE XVI–c.—RETROREFLECTIVE SHEETING PHOTOMETRY REQUIREMENTS

Observation angle (degrees)	Entrance angle (degrees)	Minimum performance					
		Grade dot-C2		Grade dot-C3		Grade dot-C4	
		White	Red	White	Red	White	Red
		(cd/lux/sq m)	(cd/lux/sq m)	(cd/lux/sq m)	(cd/lux/sq m)	(cd/lux/sq m)	(cd/lux/sq m)
0.2	−4	250	60	165	40	125	30
	30	250	60	165	40	125	30
	45	60	15	40	10	30	8
0.5	−4	65	15	43	10	33	8
	30	65	15	43	10	33	8
	45	15	4	10	3	8	2

TABLE XVII.—SCHOOL BUS SIGNAL LAMP PHOTOMETRY REQUIREMENTS

Test point (degrees)	Minimum photometric intensity (cd) [2] red lamps	Minimum photometric intensity (cd) amber lamps
5U:		
20L	150	375
10L	300	750
5L	300	750
V	300	750
5R	300	750
10R	300	750
20R	150	375
H:		
30L	30	75
20L	180	450
10L	400	1000
5L	500	1250

TABLE XVII.—SCHOOL BUS SIGNAL LAMP PHOTOMETRY REQUIREMENTS—Continued

Test point (degrees)	Minimum photometric intensity (cd) [2] red lamps	Minimum photometric intensity (cd) amber lamps
V	600	1500
5R	500	1250
10R	400	1000
20R	180	450
30R	30	75
5D:		
30L	30	75
20L	200	500
10L	300	750
5L	450	1125
V	450	1125
5R	450	1125
10R	300	750
20R	200	500
30R	30	75
10D: [1]		
5L	40	100
V	40	100
5R	40	100

[1] Where school bus signal lamps are mounted with their axis of reference less than 750 mm above the road surface, photometry requirements below 5° down may be met at 5° down rather than at the specified required downward angle.

[2] The photometric intensity values between test points must not be less than the lower specified minimum value of the two closest adjacent test points on a horizontal or vertical line.

TABLE XVIII: HEADLAMP UPPER BEAM PHOTOMETRY REQUIREMENTS

TEST POINT (degrees)		UPPER BEAM #1 (UB1)		UPPER BEAM #2 (UB2)		UPPER BEAM #3 (UB3)	
		MAXIMUM PHOTOMETRIC INTENSITY (cd)	MINIMUM PHOTOMETRIC INTENSITY (cd)	MAXIMUM PHOTOMETRIC INTENSITY (cd)	MINIMUM PHOTOMETRIC INTENSITY (cd)	MAXIMUM PHOTOMETRIC INTENSITY (cd)	MINIMUM PHOTOMETRIC INTENSITY (cd)
2U	V	-	1,500	-	1,500	-	1,000
1U	3L &3R	-	5,000	-	5,000	-	2,000
H	V	70,000	40,000	75,000	40,000	75,000	20,000
H	3L & 3R	-	15,000	-	15,000	-	10,000
H	6L & 6R	-	5,000	-	5,000	-	3,250
H	9L & 9R	-	3,000	-	3,000	-	1,500
H	12L & 12R	-	1,500	-	1,500	-	750
1.5D	V	-	5,000	-	5,000	-	5,000
1.5D	9L & 9R	-	2,000	-	2,000	-	1,500
2.5D	V	-	2,500	-	2,500	-	2,500
2.5D	12L & 12R	-	1,000	-	1,000	-	750
4D	V	5,000	-	12,000	-	5,000	-
		UPPER BEAM #4 (UB4)		UPPER BEAM #5 (UB5)		UPPER BEAM #6 (UB6)	
2U	V	-	750	-	750	-	1,500
1U	3L &3R	-	3,000	-	2,000	-	5,000
H	V	60,000	18,000	15,000	7,000	70,000	40,000
H	3L & 3R	-	12,000	-	3,000	-	15,000
H	6L & 6R	-	3,000	-	2,000	-	5,000
H	9L & 9R	-	2,000	-	1,000	-	3,000
H	12L & 12R	-	750	-	750	-	1,500
1.5D	V	-	3,000	-	2,000	-	5,000
1.5D	9L & 9R	-	1,250	-	750	-	1,000
2.5D	V	-	1,500	-	1,000	-	-
2.5D	12L & 12R	-	600	-	400	-	-
4D	V	5,000	-	2,500	-	5,000	-

TABLE XIX-a: HEADLAMP LOWER BEAM PHOTOMETRY REQUIREMENTS

TEST POINT (degrees)		LOWER BEAM # 1M (LB1M)		LOWER BEAM # 1V (LB1V)		LOWER BEAM # 2M (LB2M)		LOWER BEAM # 2V (LB2V)	
		MAXIMUM PHOTOMETRIC INTENSITY (cd)	MINIMUM PHOTOMETRIC INTENSITY (cd)	MAXIMUM PHOTOMETRIC INTENSITY (cd)	MINIMUM PHOTOMETRIC INTENSITY (cd)	MAXIMUM PHOTOMETRIC INTENSITY (cd)	MINIMUM PHOTOMETRIC INTENSITY (cd)	MAXIMUM PHOTOMETRIC INTENSITY (cd)	MINIMUM PHOTOMETRIC INTENSITY (cd)
(1) 10U to 90U	(1) 90L to 90R	125	-	125	-	125	-	125	
4U	8L & 8R	-	64	-	64	-	64	--	64
2U	4L	-	135	-	135	-	135	-	135
1.5U	1R to 3R	-	200	-	200	-	200	-	200
1.5U	1R to R	1,400	-	1,400	-	1,400	-	1,400	-
1U	1.5L to L	700	-	700	-	700	-	700	-
0.5U	1.5L to L	1,000	-	1,000	-	1,000	-	1,000	-
0.5U	1R to 3R	2,700	500	2,700	500	2,700	500	2,700	500
H	V	5,000	-	5,000	-	-	-	-	-
H	4L	-	135	-	135	-	135	-	135
H	8L	-	64	-	64	-	64	-	64
0.5D	1.5L to L	3,000	-	-	-	3,000	-	-	-
0.5D	1.5R	20,000	10,000	-	-	20,000	10,000	-	-
0.6D	1.3R	-	-	-	10,000	-	-	-	10,000
0.86D	V	-	-	-	4,500	-	-	-	4,500
0.86D	3.5L	-	-	12,000	1,800	-	-	12,000	1,800
1D	6L	-	1,000	-	-	-	1,000	-	-
1.5D	2R	-	15,000	-	15,000	-	15,000	-	15,000
1.5D	9L & 9R	-	1,000	-	-	-	1,000	-	-
2D	9L & 9R	-	-	-	1,250	-	-	-	1,250
2D	15L & 15R	-	850	-	1,000	-	850	-	1,000
2.5D	V	-	-	-	-	-		-	-
2.5D	12L & 12R	-	-	-	-	-	-	-	-
4D	V	7,000	-	10,000	-	-	-	-	-
4D	4R	12,500	-	12,500	-	12,500	-	12,500	-
4D	20L & 20R	-	-	-	300	-	-	-	300

(1) These test points are boundaries, all test points that fall into the area defined by these points must meet the listed photometry requirement.

TABLE XIX-b: HEADLAMP LOWER BEAM PHOTOMETRY REQUIREMENTS

TEST POINT (degrees)		LOWER BEAM #3 M (LB3M)		LOWER BEAM # 3V (LB3V)		LOWER BEAM # 4M (LB4M)		LOWER BEAM # 5M (LB5M)	
		MAXIMUM PHOTOMETRIC INTENSITY (cd)	MINIMUM PHOTOMETRIC INTENSITY (cd)	MAXIMUM PHOTOMETRIC INTENSITY (cd)	MINIMUM PHOTOMETRIC INTENSITY (cd)	MAXIMUM PHOTOMETRIC INTENSITY (cd)	MINIMUM PHOTOMETRIC INTENSITY (cd)	MAXIMUM PHOTOMETRIC INTENSITY (cd)	MINIMUM PHOTOMETRIC INTENSITY (cd)
(1) 10U to 90U	(1) 90L to 90R	125	-	125	-	125	-	125	-
4U	8L & 8R	-	64	-	64	-	64	-	64
2U	4L	-	135	-	135	-	135	-	135
1.5U	1R to 3R	-	200	-	200	-	200	-	200
1.5U	1R to R	1,400	-	1,400	-	1,400	-	1,400	--
1U	1.5L to L	700	-	700	-	700	-	700	-
0.5U	1.5L to L	1,000	-	1,000	-	1,000	-	1,000	-
0.5U	1R to 3R	2,700	500	2,700	500	2,700	500	2,700	500
H	V	-	-	-	-	-	-	5,000	-
H	4L	-	135	-	135	-	135	-	135
H	8L	-	64	-	64	-	64	-	64
0.5D	1.5L to L	2,500	-	-	-	2500	-	3,000	-
0.5D	1.5R	20,000	8,000	-	-	20,000	8,000	20,000	10,000
0.6D	1.3R	-		-	10,000	-	-	-	-
0.86D	V	-	--	-	4,500	-	-	-	-
0.86D	3.5L	-	-	12,000	1,800	-	-	-	-
1D	6L	-	750	-	-	-	750	-	1,000
1.5D	2R	-	15,000	-	15,000	-	15,000	-	15,000
1.5D	9L & 9R	-	750	-	-	-	750	-	1,000
2D	9L & 9R	-	-	-	1,250	-	-	-	-
2D	15L & 15R	-	700	-	1,000	-	700	-	850
2.5D	V	-	-	-	-	-	-	-	2,500
2.5D	12L & 12R	-	-	-	-	-	-	-	1,000
4D	V	-	-	-	-	-	-	7,000	-
4D	4R	12,500	-	12,500	-	12,500	-	12,500	-
4D	20L & 20R	-	-	-	300	-	-	-	-

(1) These test points are boundaries, all test points that fall into the area defined by these points must meet the listed photometry requirement.

TABLE XIX-c: HEADLAMP LOWER BEAM PHOTOMETRY REQUIREMENTS

TEST POINT (degrees)		LOWER BEAM # 4 V (LB4V)	
		MAXIMUM PHOTOMETRIC INTENSITY (cd)	MINIMUM PHOTOMETRIC INTENSITY (cd)
(1) 10U to 90U	(1) 90L to 90R	125	-
4U	8L & 8R	-	64
2U	4L	-	135
1.5U	1R to 3R	-	200
1.5U	1R to R	1,400	-
1U	1.5L to L	700	-
0.5U	1.5L to L	1,000	-
0.5U	1R to 3R	2,700	500
H	V	5,000	-
H	4L	-	135
H	8L	-	64
0.5D	1.5L to L	-	-
0.5D	1.5R	-	-
0.6D	1.3R	-	10,000
0.86D	V	-	4,500
0.86D	3.5L	12,000	1,800
1D	6L	-	-
1.5D	2R	-	15,000
1.5D	9L & 9R	--	-
2D	9L & 9R	-	1,250
2D	15L & 15R	-	1,000
2.5D	V	-	2,500
2.5D	12L & 12R	-	1,000
4D	V	10,000	-
4D	4R	12,500	-
4D	20L & 20R	-	300

(1) These test points are boundaries, all test points that fall into the area defined by these points must meet the listed photometry requirement.

TABLE XX: MOTORCYCLE AND MOTOR DRIVEN CYCLE HEADLAMP PHOTOMETRY REQUIREMENTS

LOWER BEAM

TEST POINT (degrees)		MOTORCYCLE		MOTOR DRIVEN CYCLE		MOTOR DRIVEN CYCLE with Single Lamp System	
		MAXIMUM PHOTOMETRIC INTENSITY (cd)	MINIMUM PHOTOMETRIC INTENSITY (cd)	MAXIMUM PHOTOMETRIC INTENSITY (cd)	MINIMUM PHOTOMETRIC INTENSITY (cd)	MAXIMUM PHOTOMETRIC INTENSITY (cd)	MINIMUM PHOTOMETRIC INTENSITY (cd)
1.5U	1R to R	1,400	-	1,400	-	-	-
1.5U	1R to 3R	-	-	-	-	1,400	-
1U	1.5L to L	700	-	700	-	700	-
0.5U	1.5L to L	1,000	-	1,000	-	1,000	-
0.5U	1R to 3R	2,700	-	2,700	-	2,700	-
1.5D	9L and 9R	-	700	-	-	-	-
2D	V	-	7,000	-	5,000	-	4,000
2D	3L and 3R	-	4,000	-	3,000	-	3,000
2D	6L and 6R	-	1,500	-	1,500	-	1,500
2D	12L and 12R	-	700	-	-	-	-
3D	6L and 6R	-	800	-	800	-	-
4D	V	-	2,000	-	2,000	-	1,000
4D	4R	12,500	-	12,500	-	12,500	-

UPPER BEAM

TEST POINT (degrees)		MOTORCYCLE		MOTOR DRIVEN CYCLE	
		MAXIMUM PHOTOMETRIC INTENSITY (cd)	MINIMUM PHOTOMETRIC INTENSITY (cd)	MAXIMUM PHOTOMETRIC INTENSITY (cd)	MINIMUM PHOTOMETRIC INTENSITY (cd)
2U	V	-	1,000	-	-
1U	3L and 3R	-	2,000	-	2,000
H	V	-	12,500	-	10,000
0.5D	V	-	20,000	-	20,000
0.5D	3L and 3R	-	10,000	-	5,000
0.5D	6L and 6R	-	3,300	-	2,000
0.5D	9L and 9R	-	1,500	-	-
0.5D	12L and 12R	-	800	-	-
1D	V	-	17,500	-	15,000
2D	V	-	5,000	-	5,000
3D	V	-	2,500	-	2,500
3D	6L and 6R	-	-	-	800
3D	9L and 9R	-	1,500	-	-
3D	12L and 12R	-	300	-	-
4D	V	-	1,500	-	-
4D	V	7,500	-	7,500	-
ANYWHERE IN BEAM		75,000	-	75,000	-

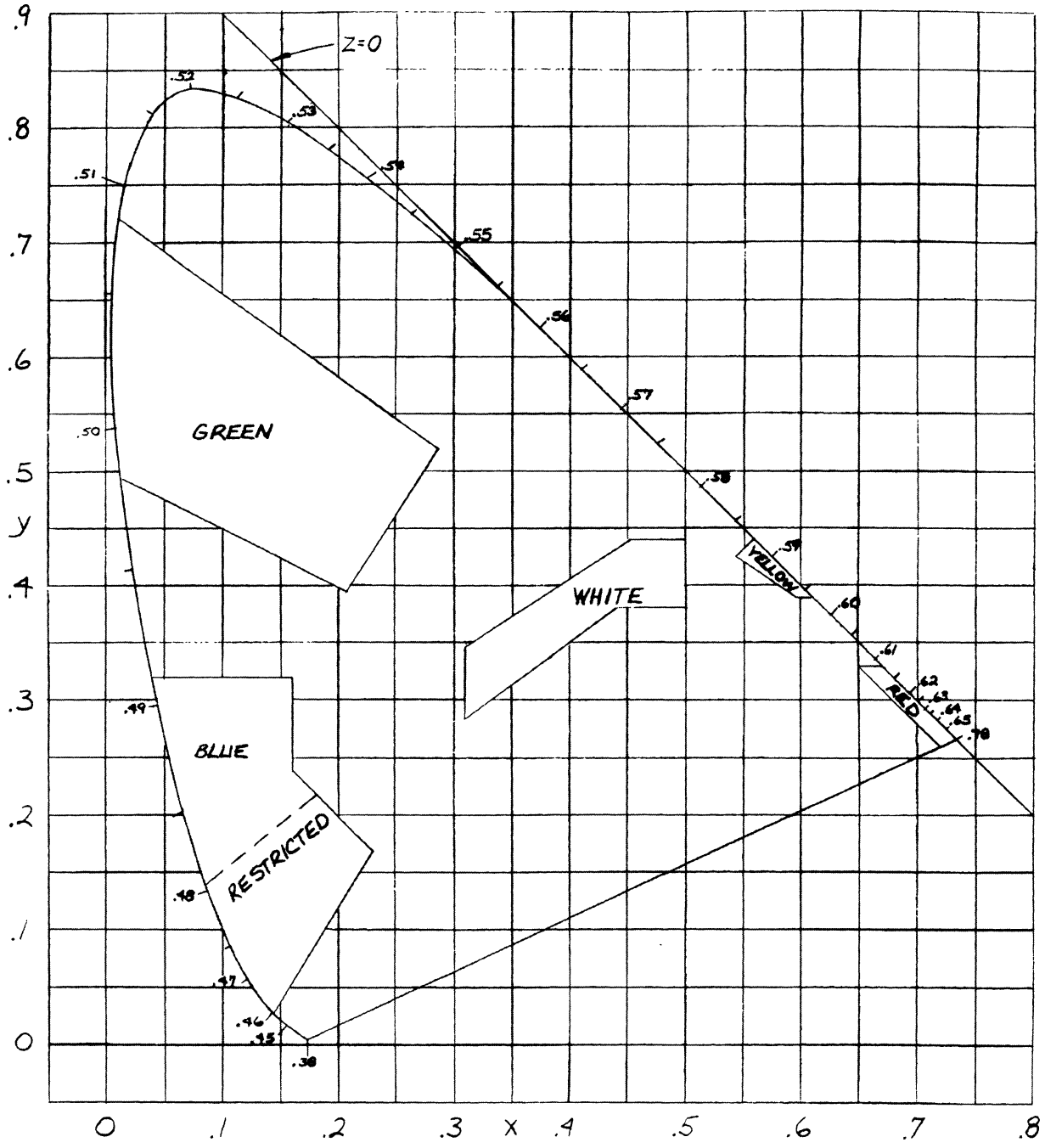

CHROMATICITY DIAGRAM

FIGURE 1

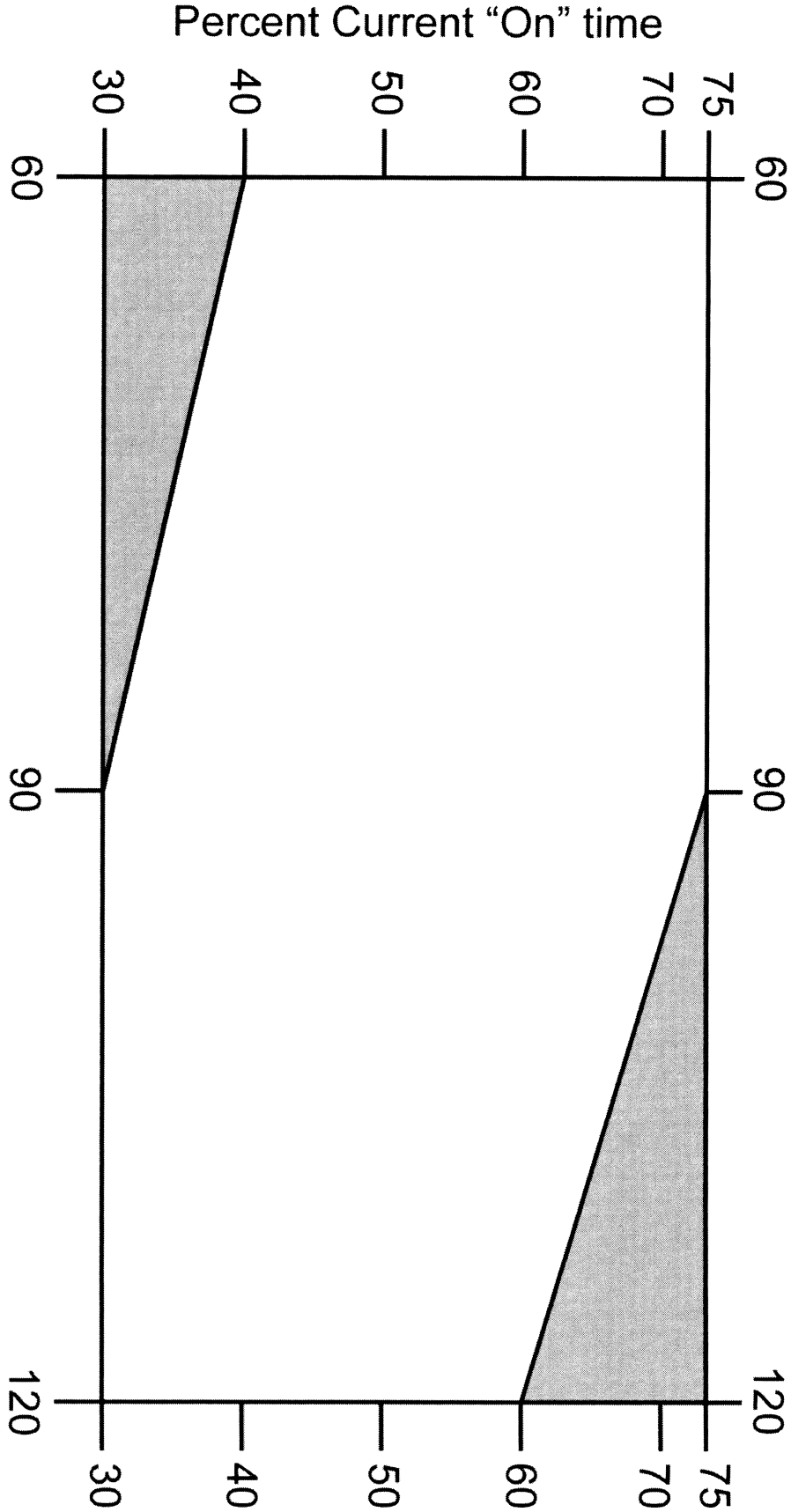

FLASHER PERFORMANCE CHART

FIGURE 2

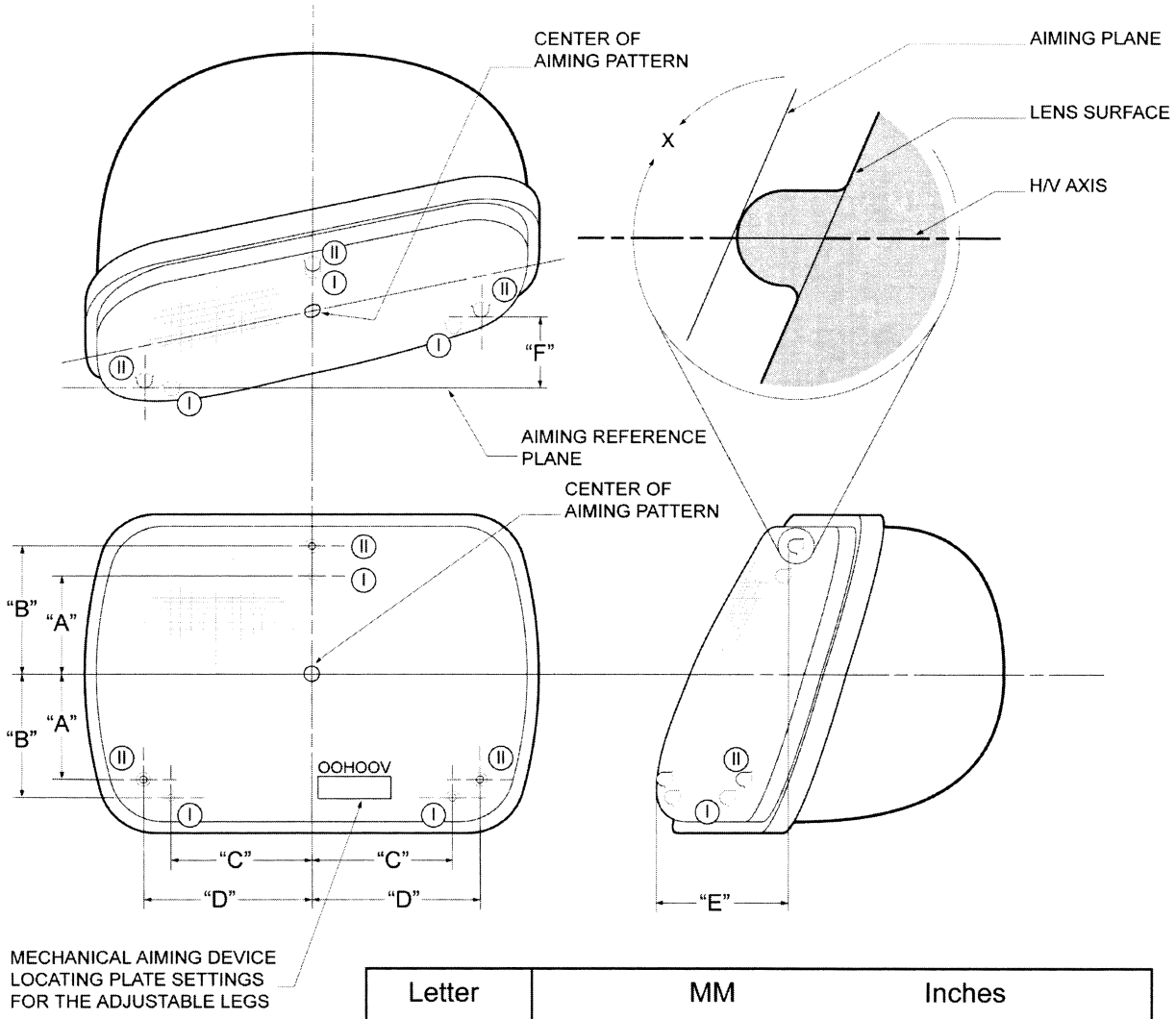

Notes:
Group I or Group II aiming pad locations may be used

Group I aiming pad location (front view) is that prescribed for 2B1 sealed beam units

Group II aiming pad location (front view) is that prescribed for 1A1/2A1 sealed beam units

Letter	MM	Inches
A	42.16 ± 0.25	1.660 ± 0.010
B	60.05 ± 1.00	2.364 ± 0.039
C	64.0 ± 1.00	2.520 ± 0.039
D	68.58 ± 0.51	2.700 ± 0.020
E	Mechanical aiming device locating plate setting for the vertical adjustable leg. (Millimeters)	
F	Mechanical aiming device locating plate setting for the horizontal adjustable leg. (Millimeters)	

REPLACEABLE BULB HEADLAMP AIM PADS

FIGURE 3

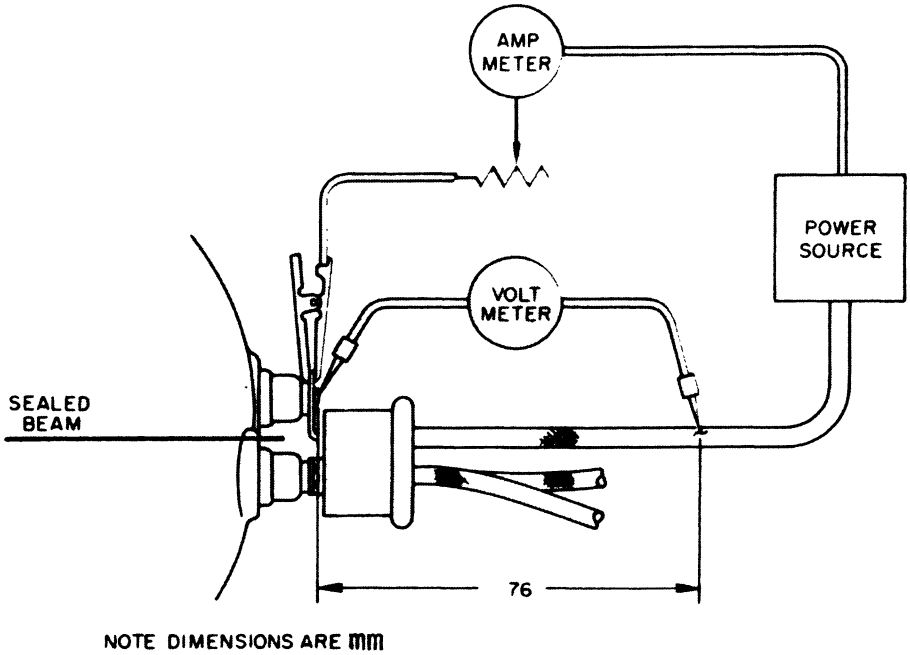

HEADLAMP CONNECTOR TEST SETUP

FIGURE 4

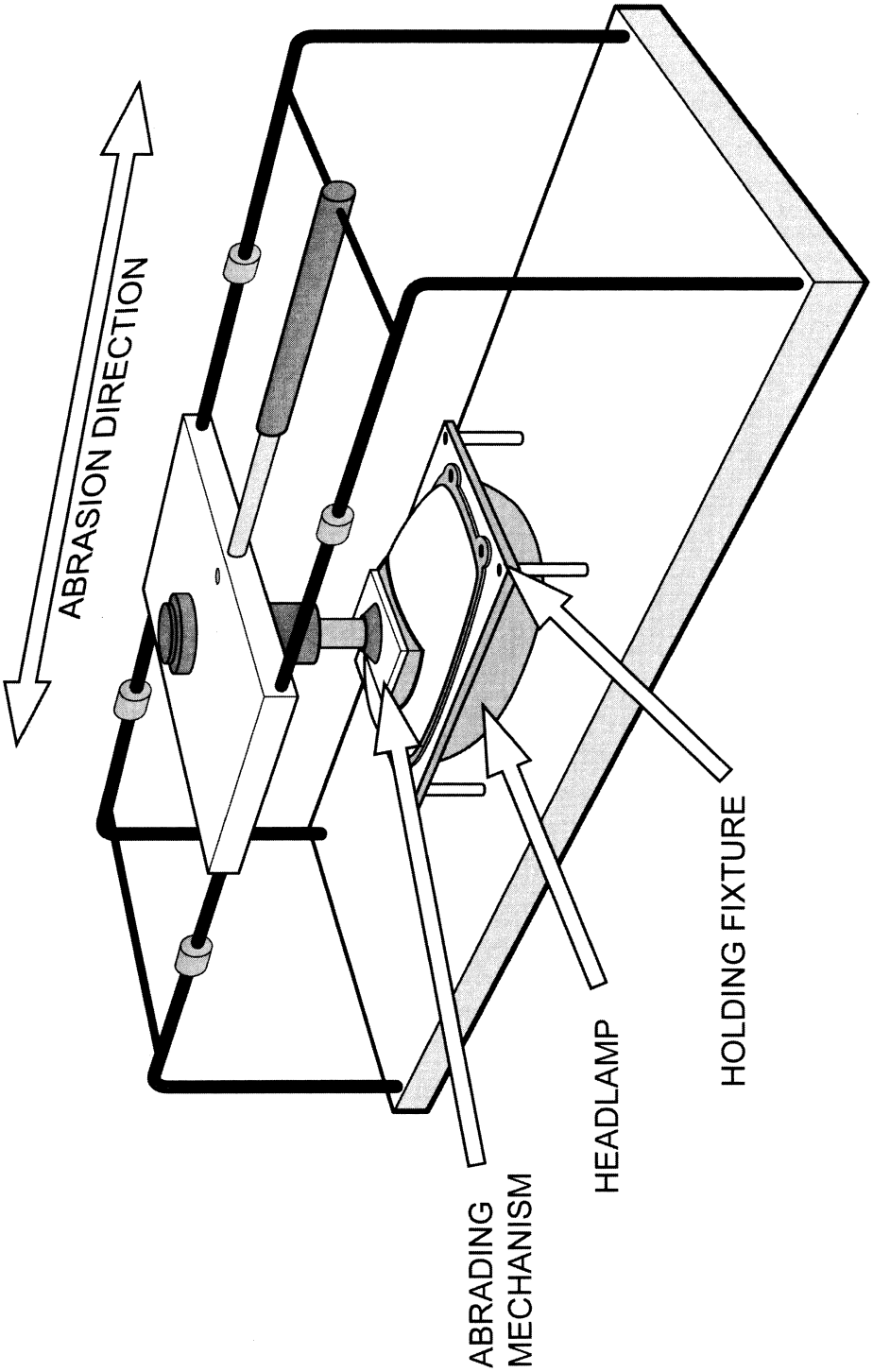

HEADLAMP ABRASION TEST FIXTURE

FIGURE 5

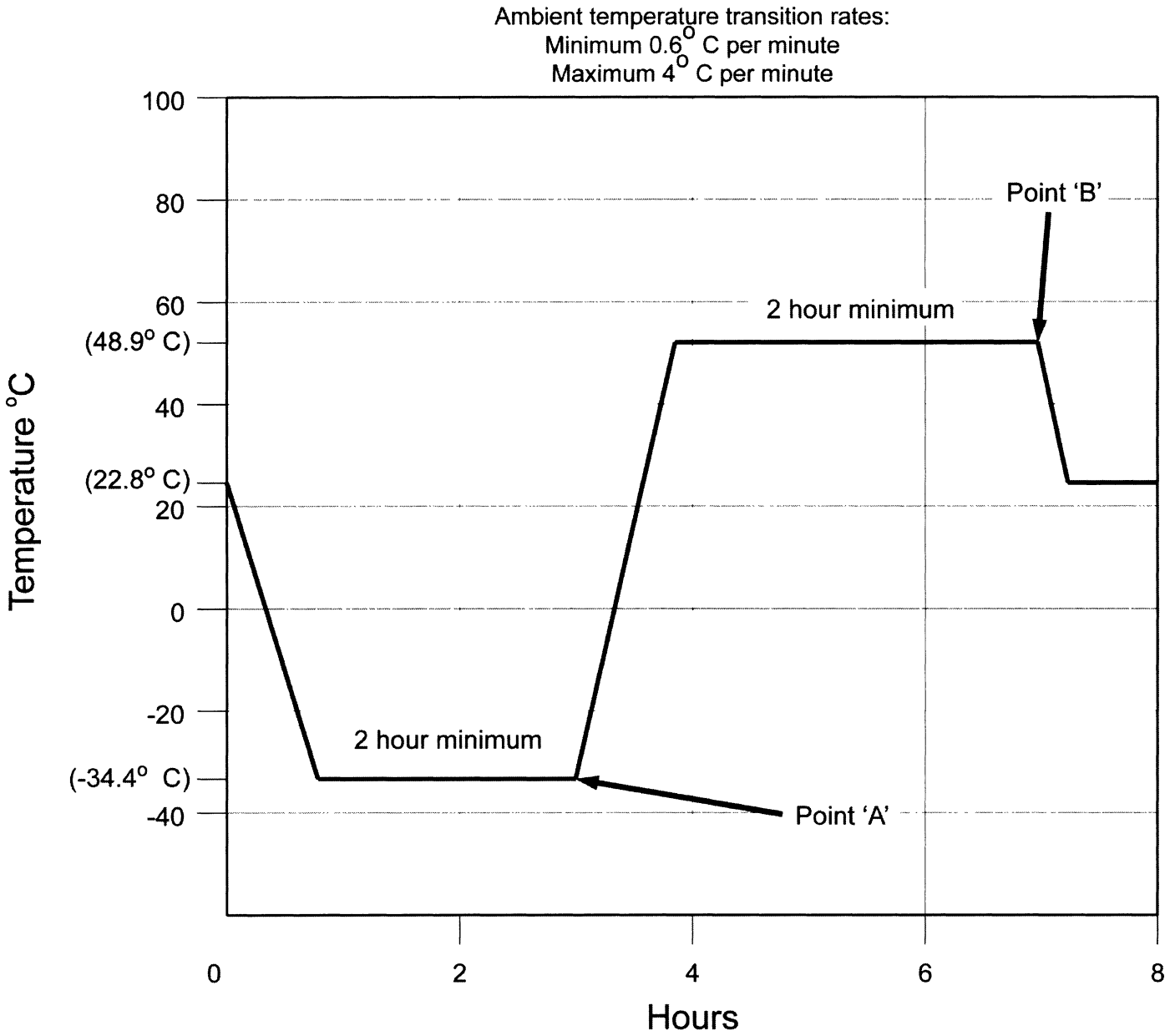

Note: Ambient conditions 23° C ± 4° and 30% RH ± 10%

THERMAL CYCLE PROFILE

FIGURE 6

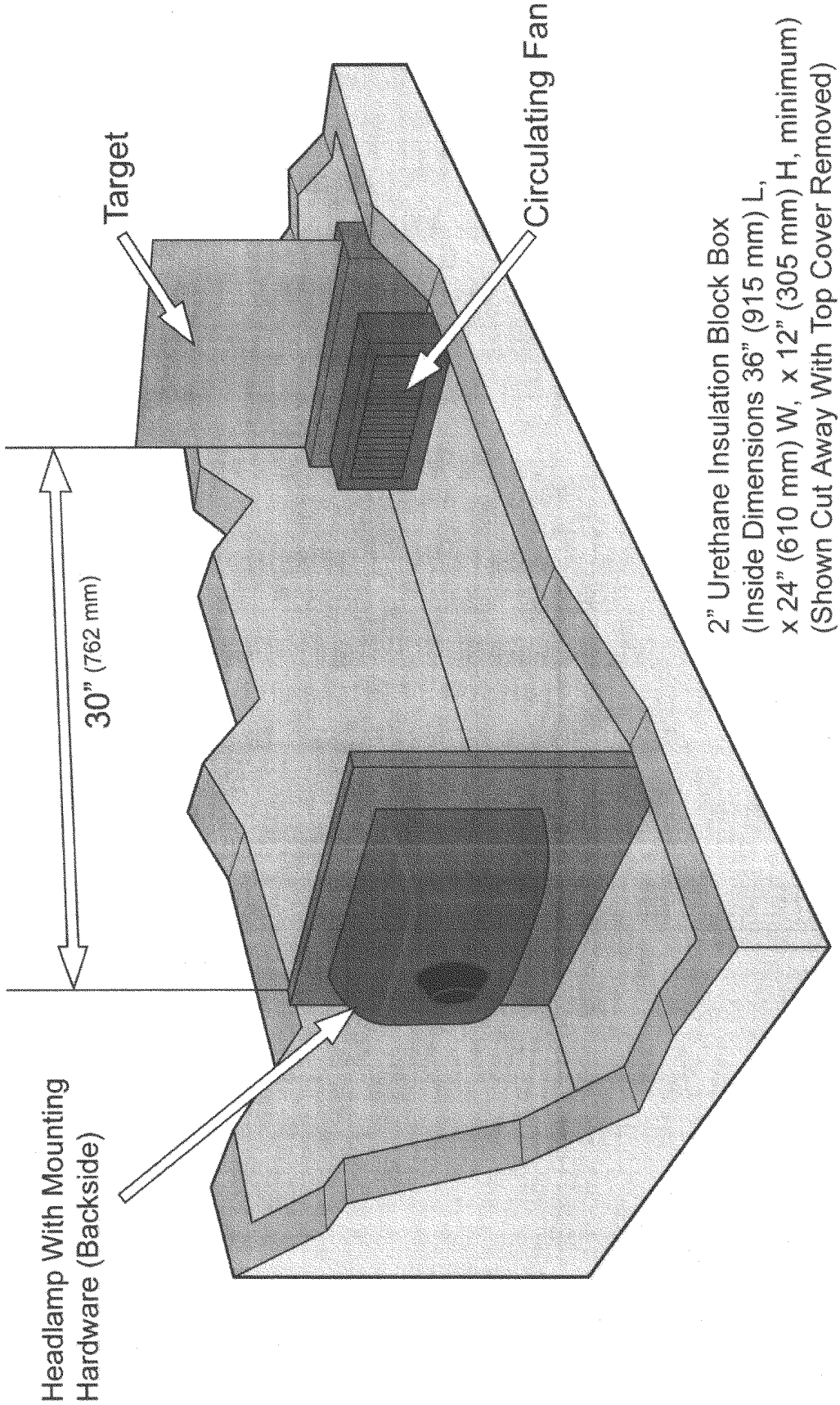

DIRT / AMBIENT TEST SETUP

FIGURE 7

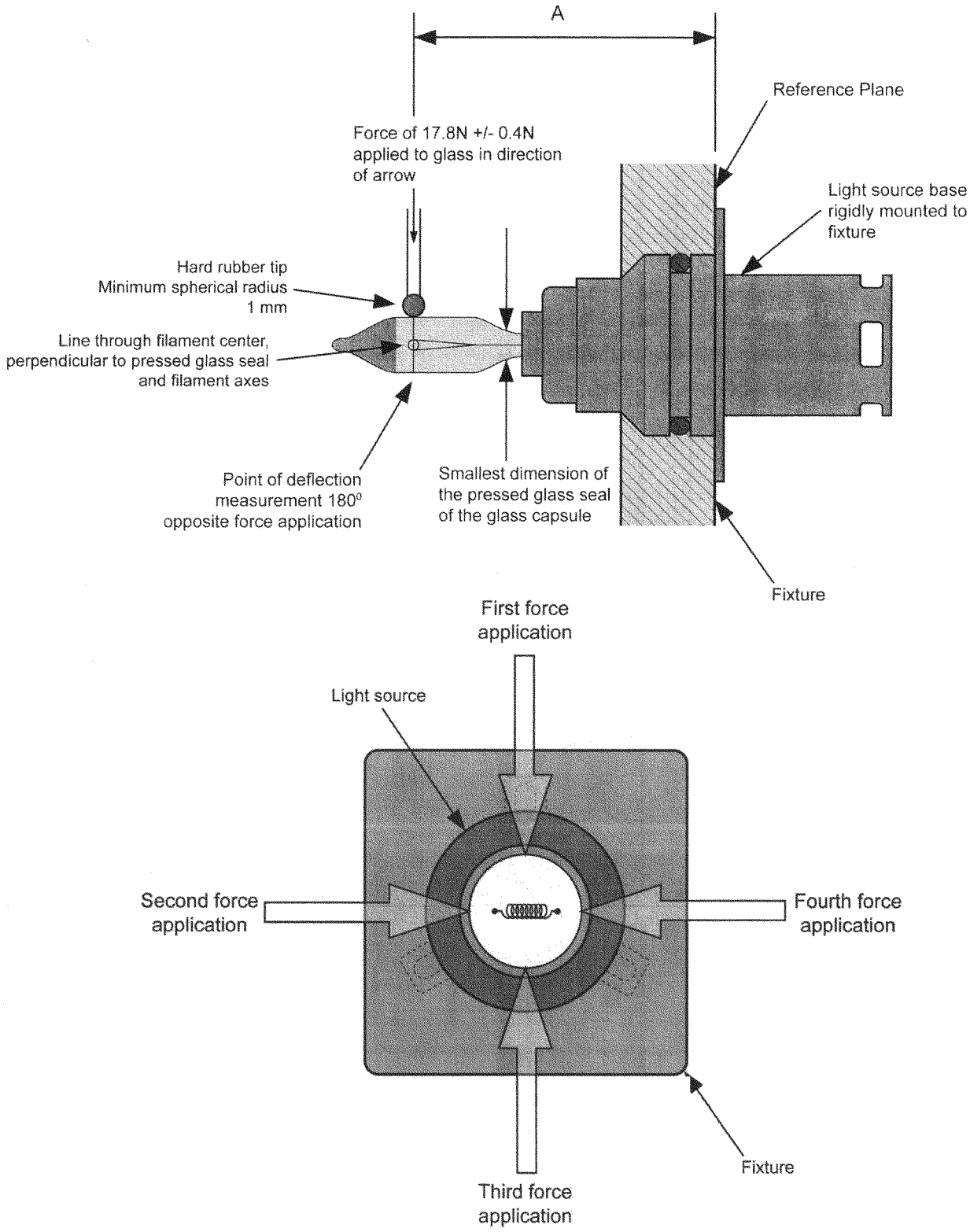

REPLACEABLE LIGHT SOURCE DEFLECTION TEST SETUP

FIGURE 8

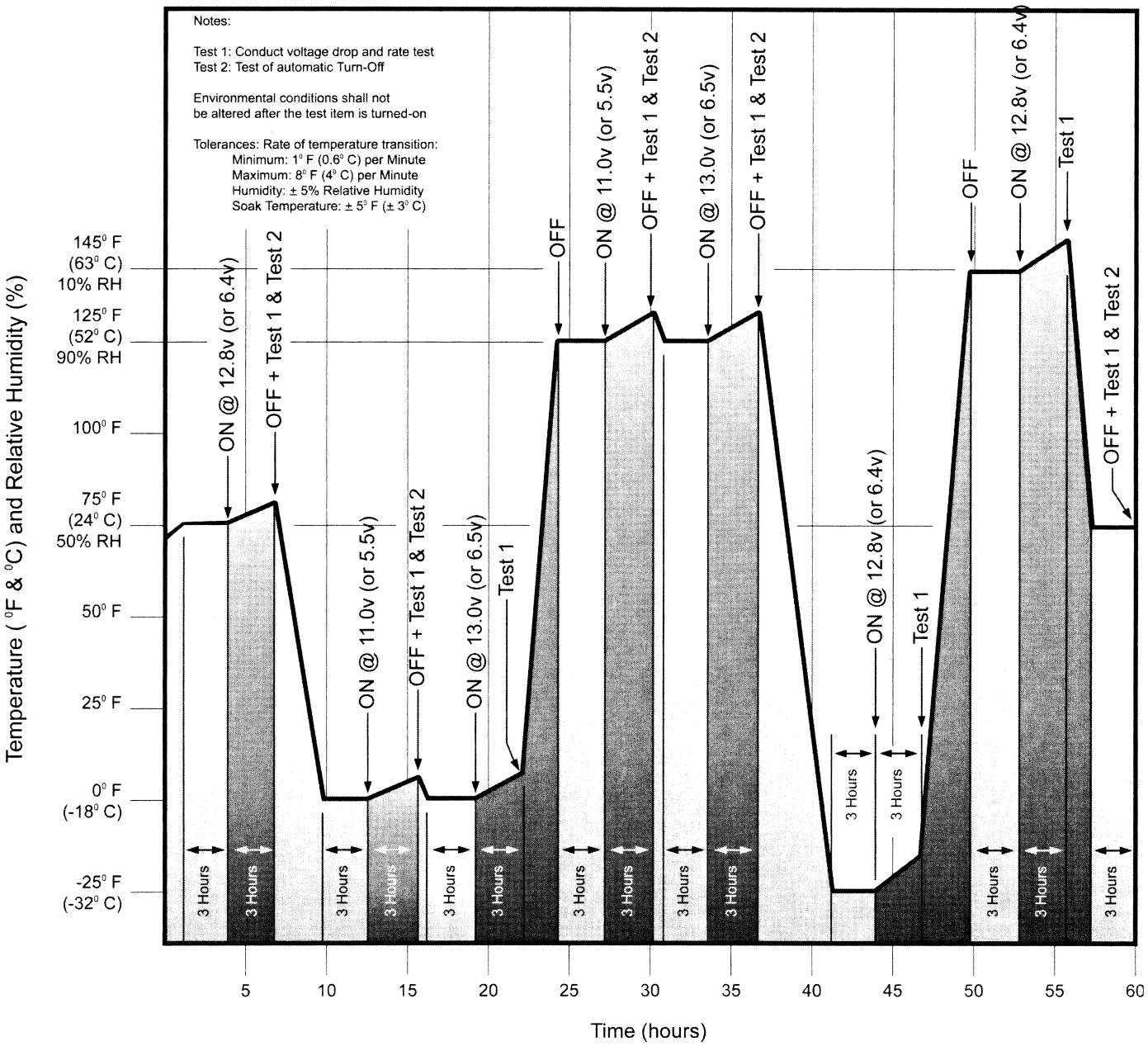

ENVIRONMENTAL TEST PROFILE

FIGURE 9

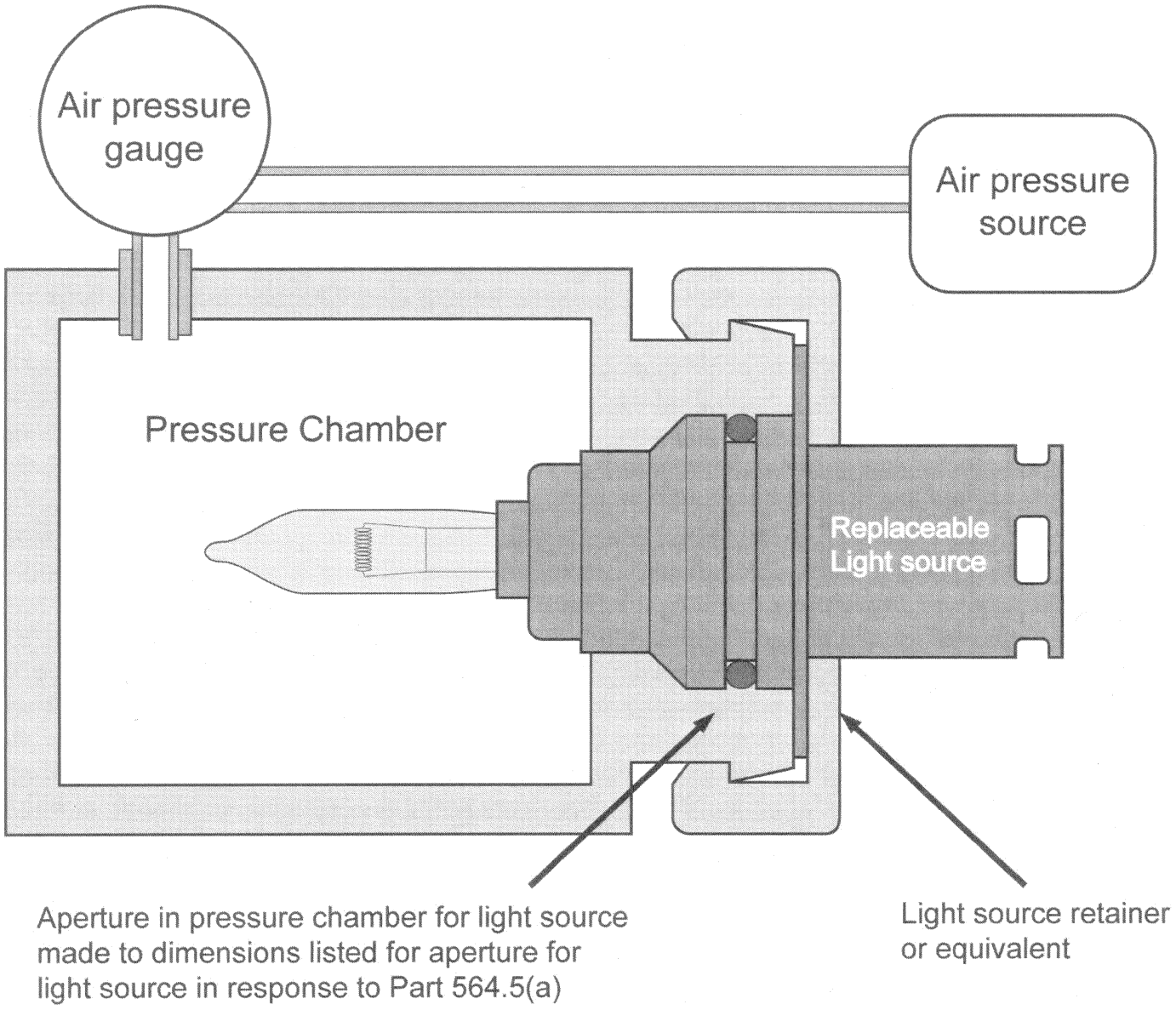

REPLACEABLE LIGHT SOURCE PRESSURE TEST SETUP

FIGURE 10

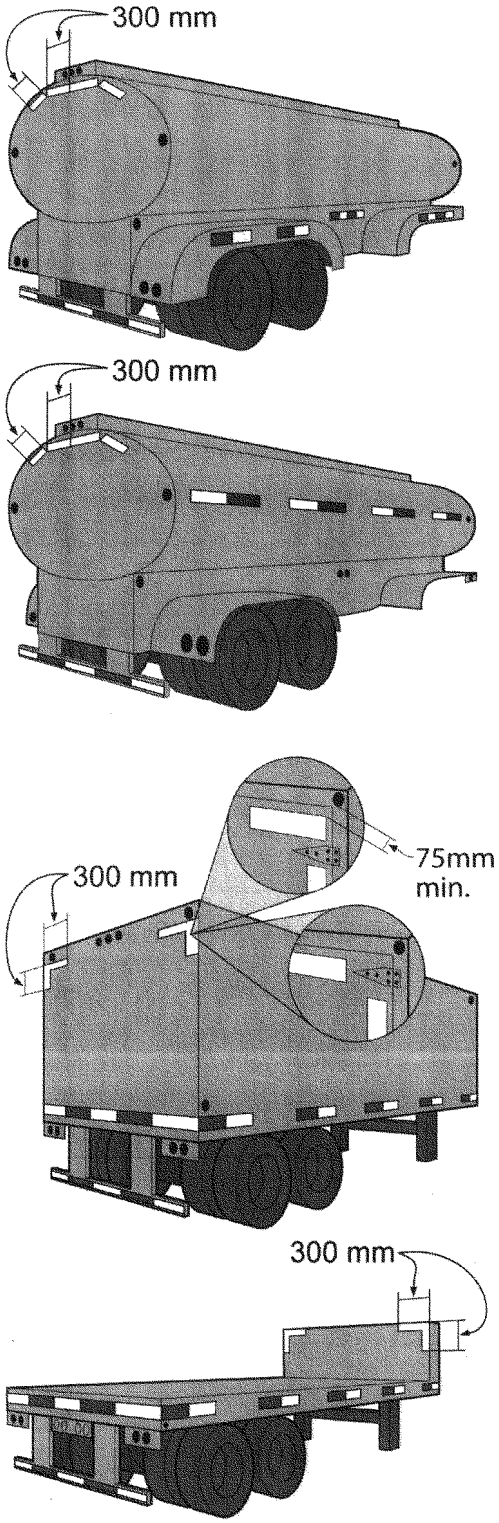

Trailer Conspicuity
Treatment Examples

FIGURE 11

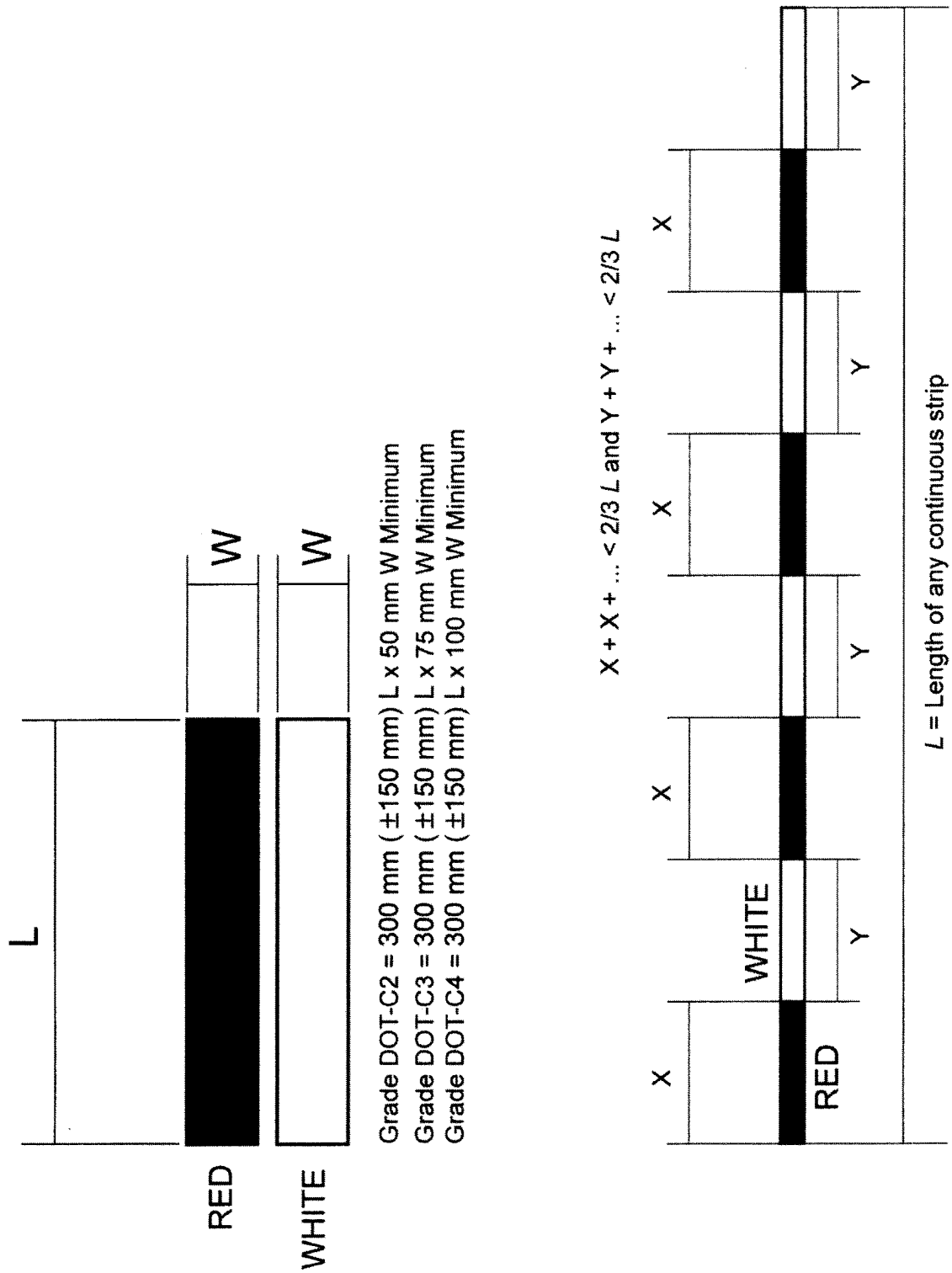

TRAILER CONSPICUITY DETAIL I

FIGURE 12-1

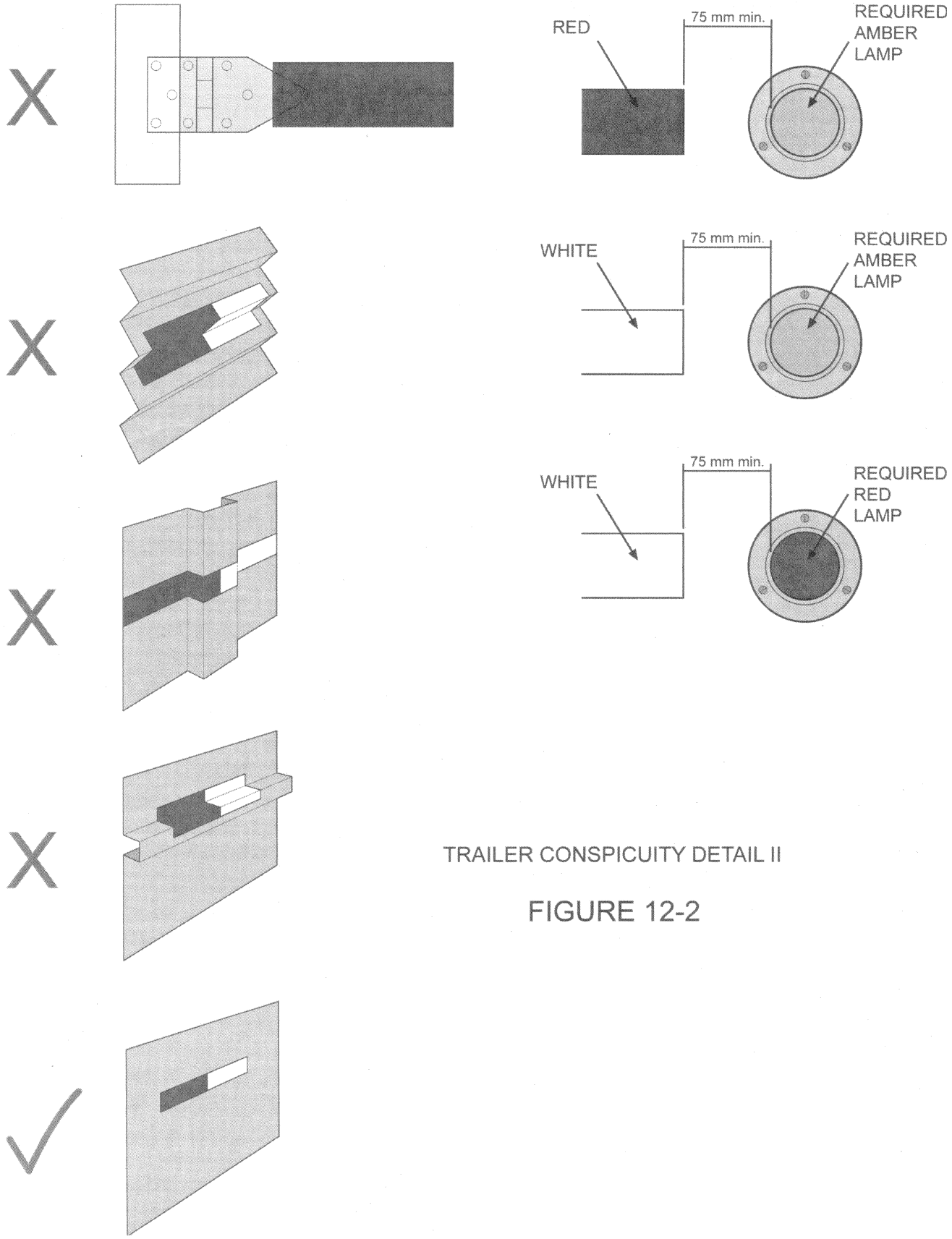

TRAILER CONSPICUITY DETAIL II

FIGURE 12-2

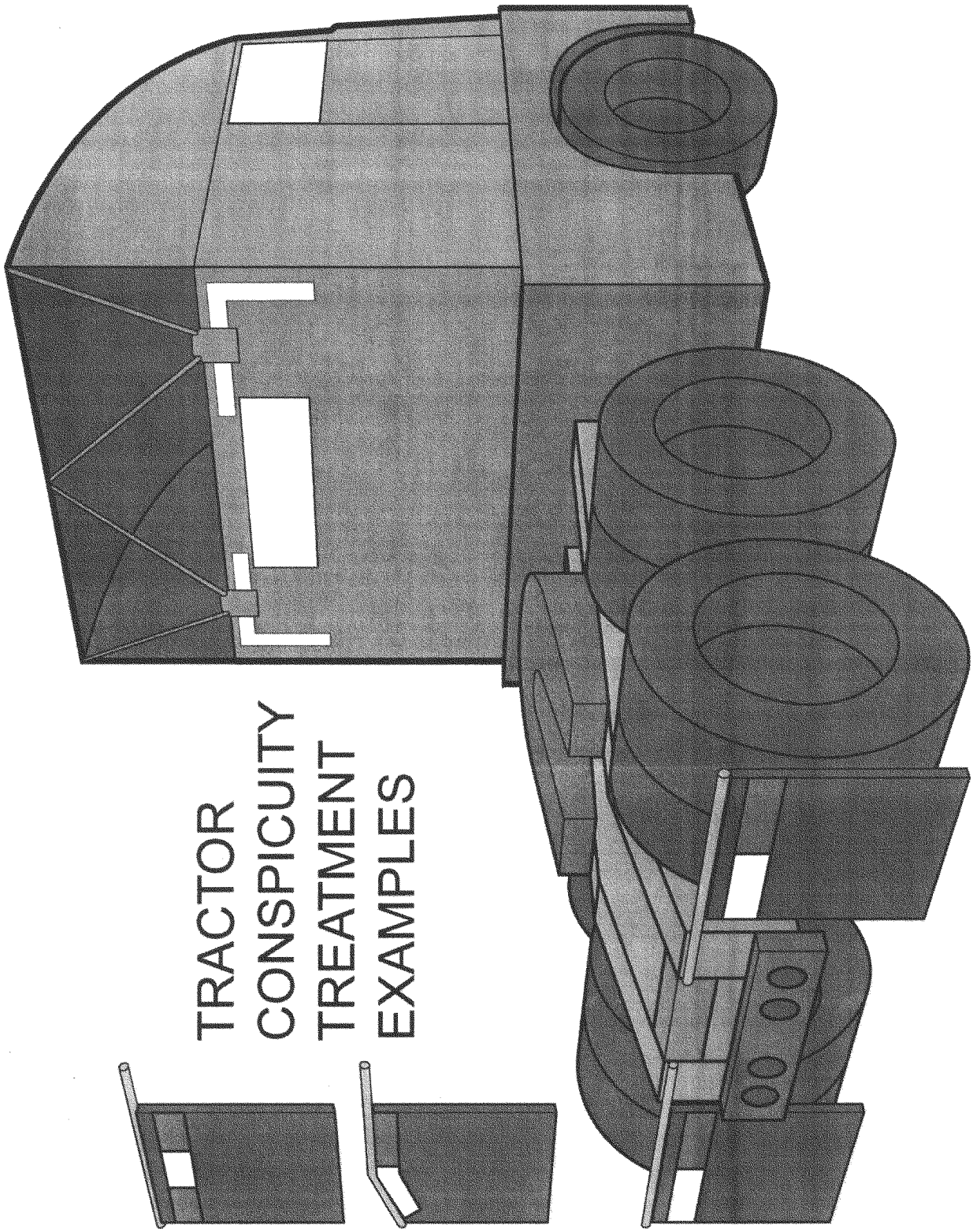

FIGURE 13

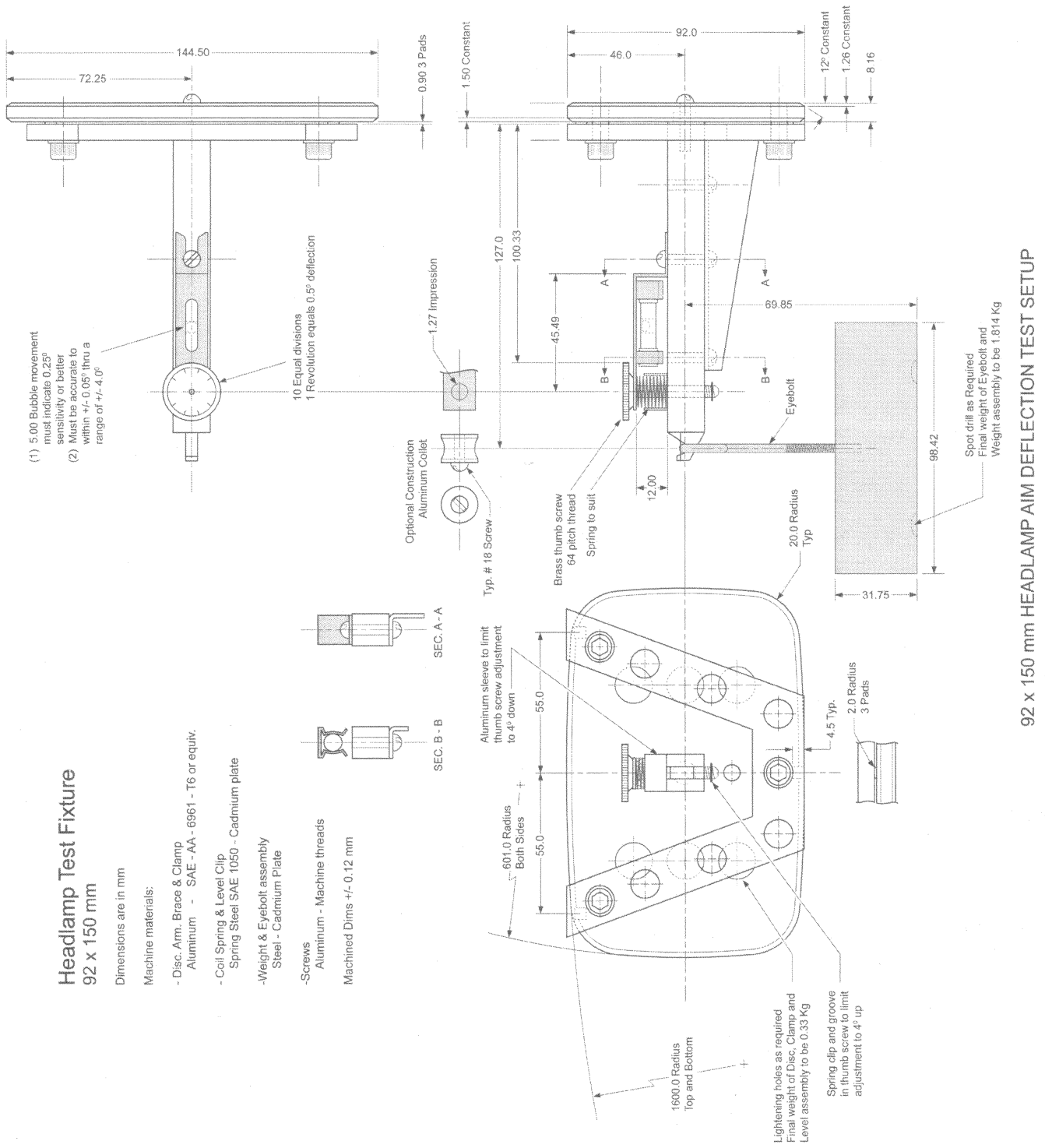

92 x 150 mm HEADLAMP AIM DEFLECTION TEST SETUP

FIGURE 14

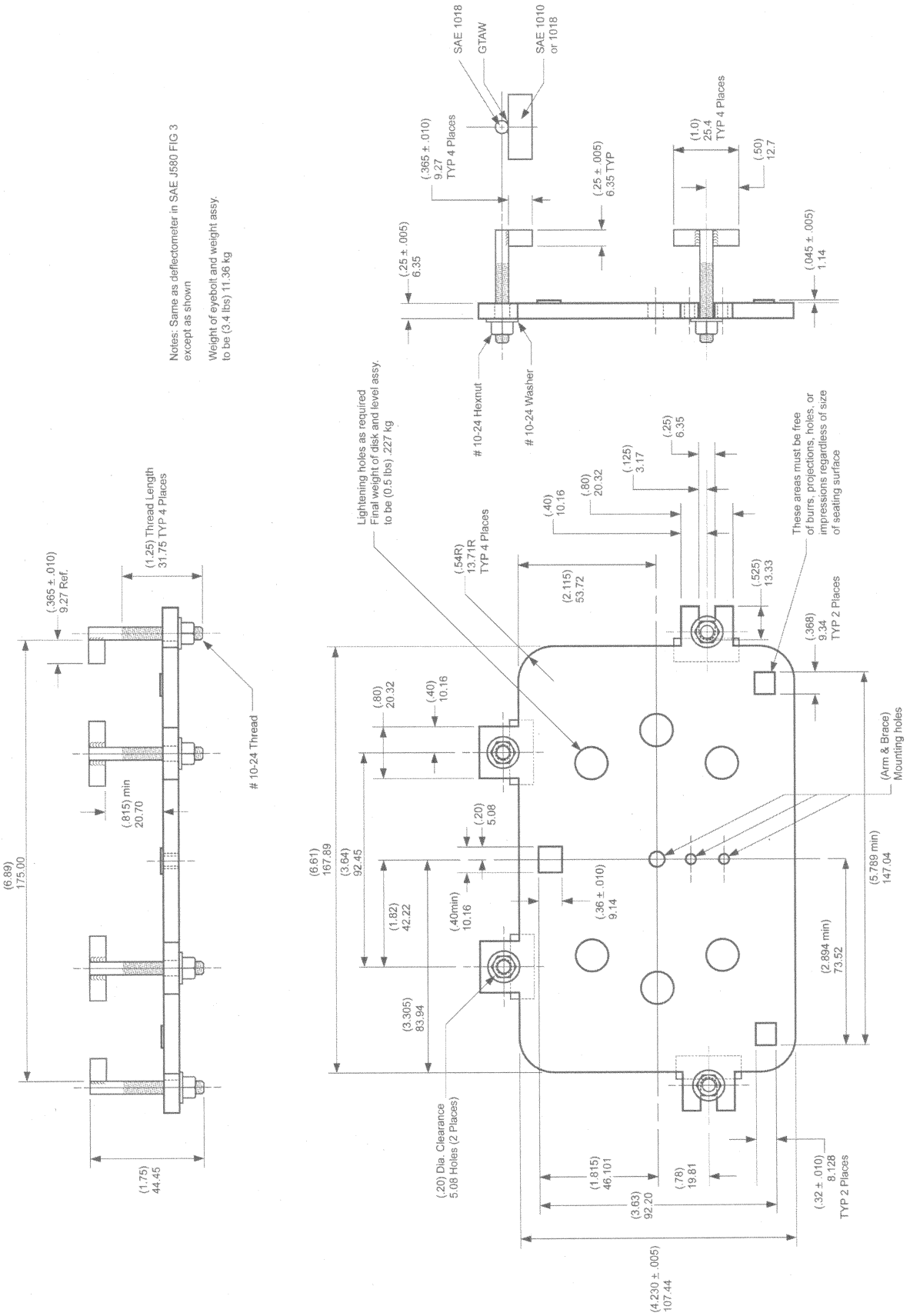

TYPES G AND H HEADLAMP AIM DEFLECTION TEST SETUP

FIGURE 15

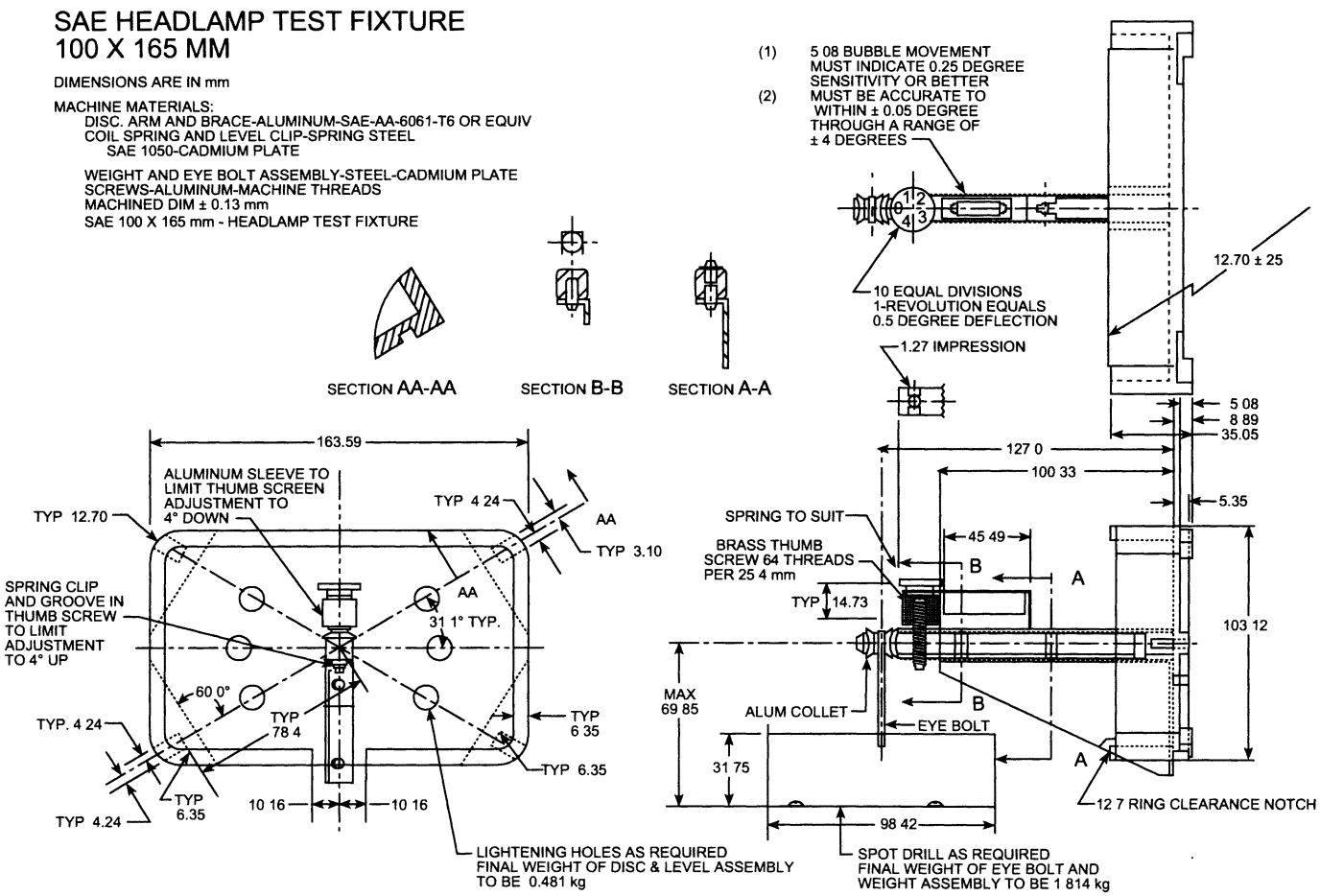

TYPES A AND E HEADLAMP AIM DEFLECTION TEST SETUP

FIGURE 16

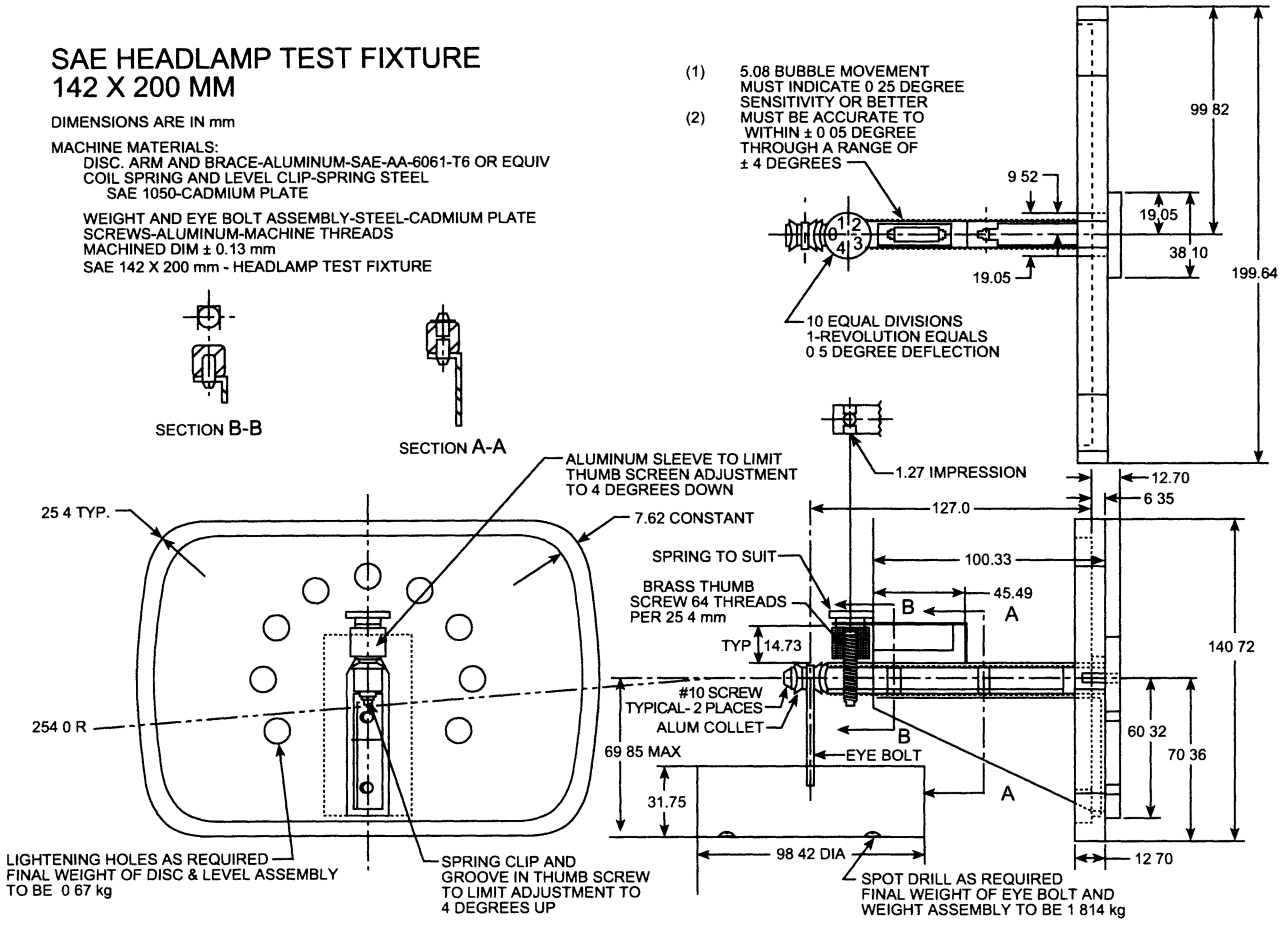

TYPE B HEADLAMP AIM DEFLECTION TEST SETUP

FIGURE 17

UNIT	A DIM	B DIM
SAE 5.75	144 53	134 62
SAE 7 00	178 31	168 66

(1) 5 08 BUBBLE MOVEMENT MUST INDICATE 0.25 DEGREE SENSITIVITY OR BETTER

(2) MUST BE ACCURATE TO WITHIN ± 0 05 DEGREE THROUGH A RANGE OF ± 4 DEGREES

DIMENSIONS ARE IN mm

MACHINE MATERIALS.
DISC. ARM AND BRACE-ALUMINUM-SAE-AA-6061-T6 OR EQUIV
COIL SPRING AND LEVEL CLIP-SPRING STEEL
SAE 1050-CADMIUM PLATE

WEIGHT AND EYE BOLT ASSEMBLY-STEEL-CADMIUM PLATE
SCREWS-ALUMINUM-MACHINE THREADS
MACHINED DIM ± 0.13 mm
SAE 146 AND SAE 178 - HEADLAMP TEST FIXTURE

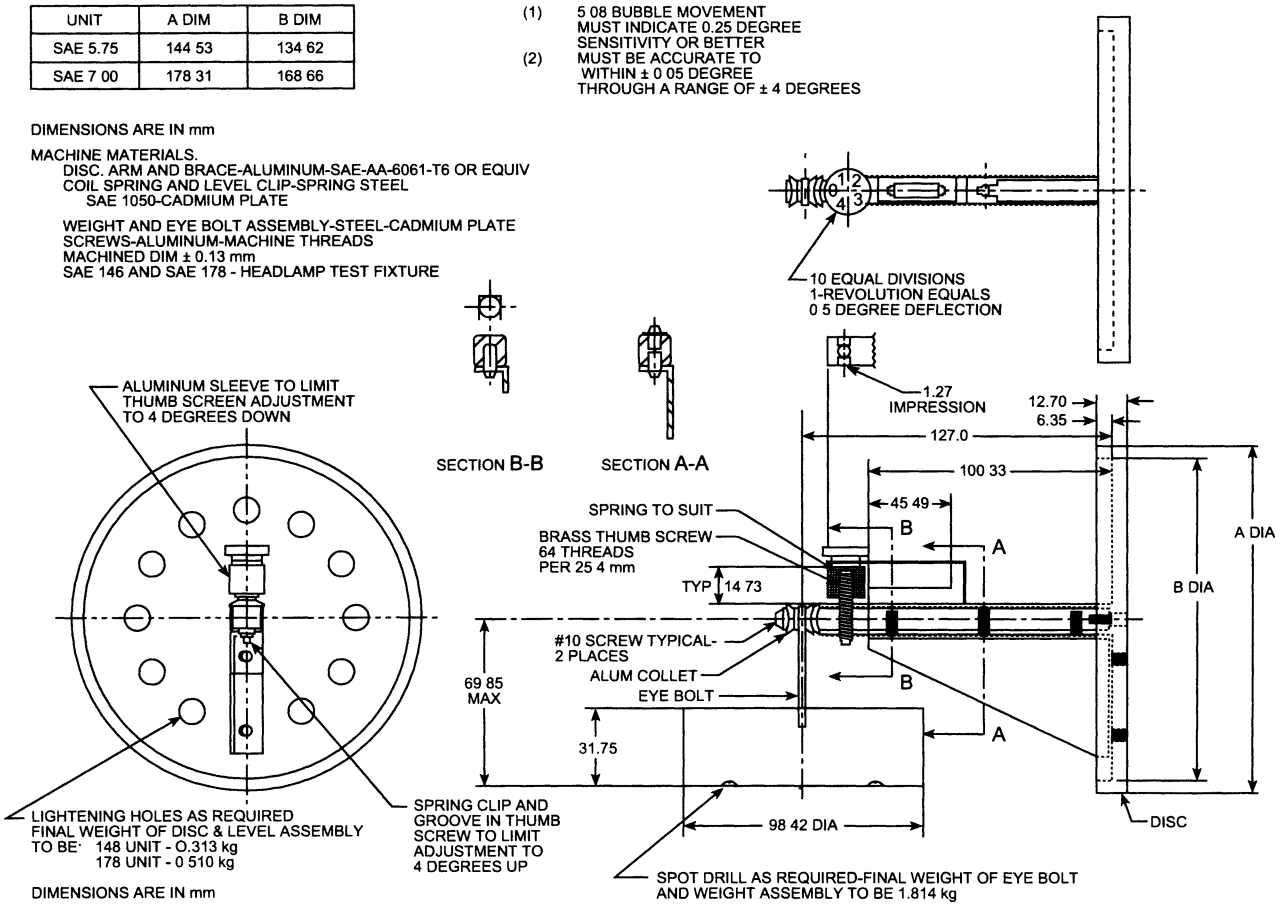

TYPES C AND D HEADLAMP AIM DEFLECTION TEST SETUP

FIGURE 18

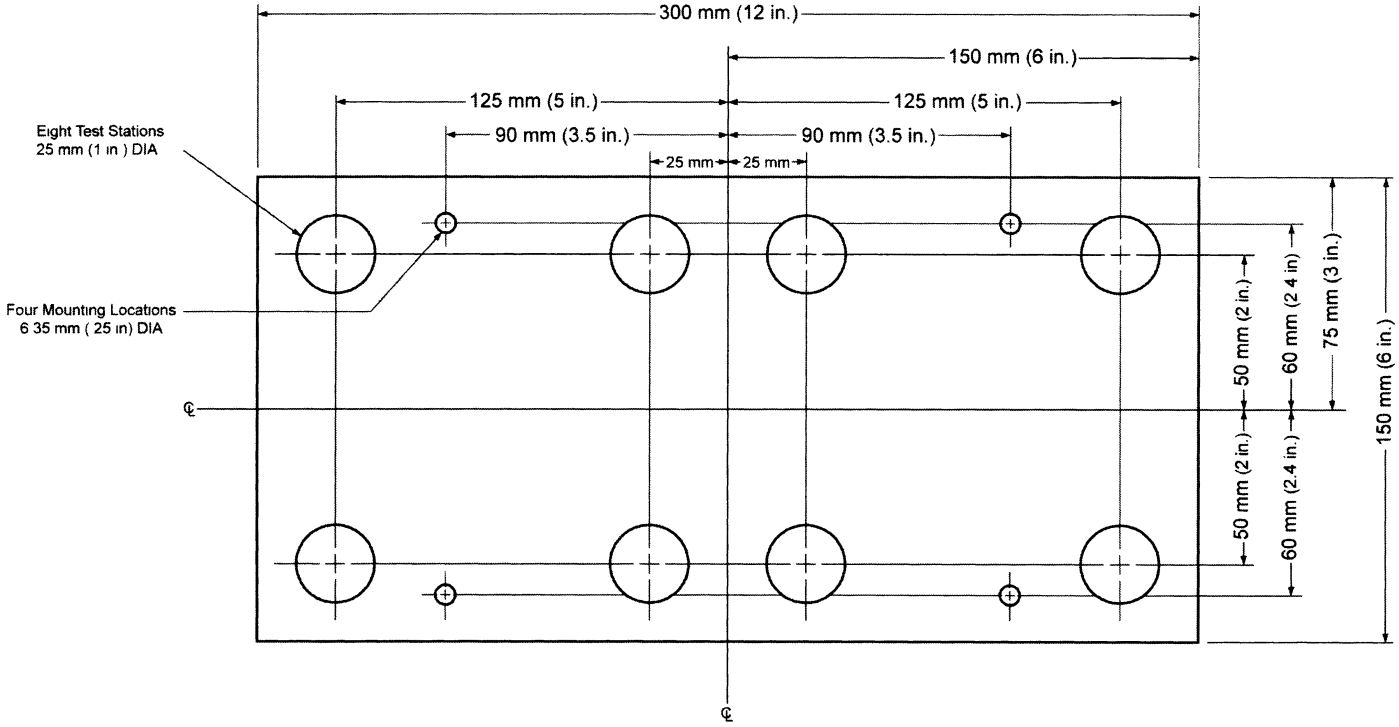

Test Plate for Vehicles other than Motorcycles and Motor Driven Cycles

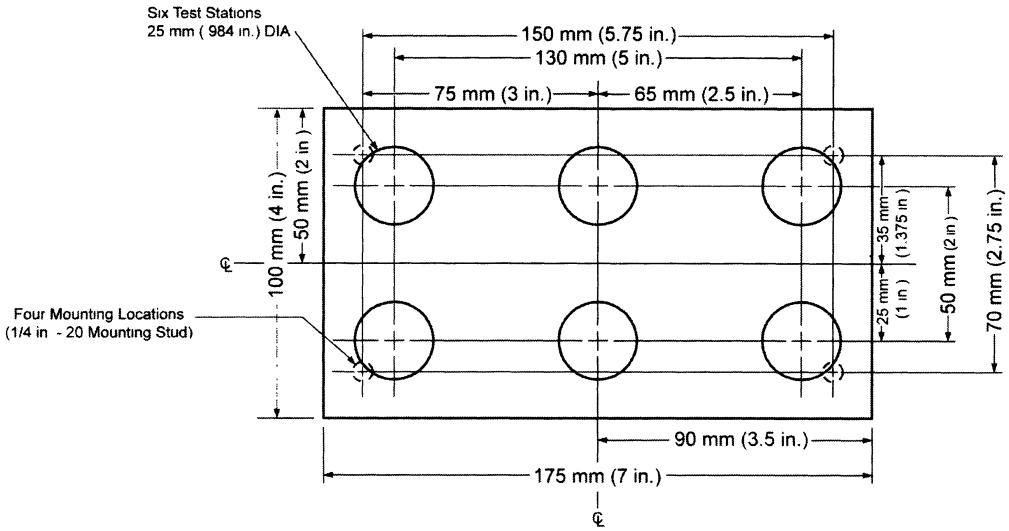

Test Plate for Motorcycles and Motor Driven Cycles

LICENSE PLATE LAMP TARGET LOCATIONS

FIGURE 19

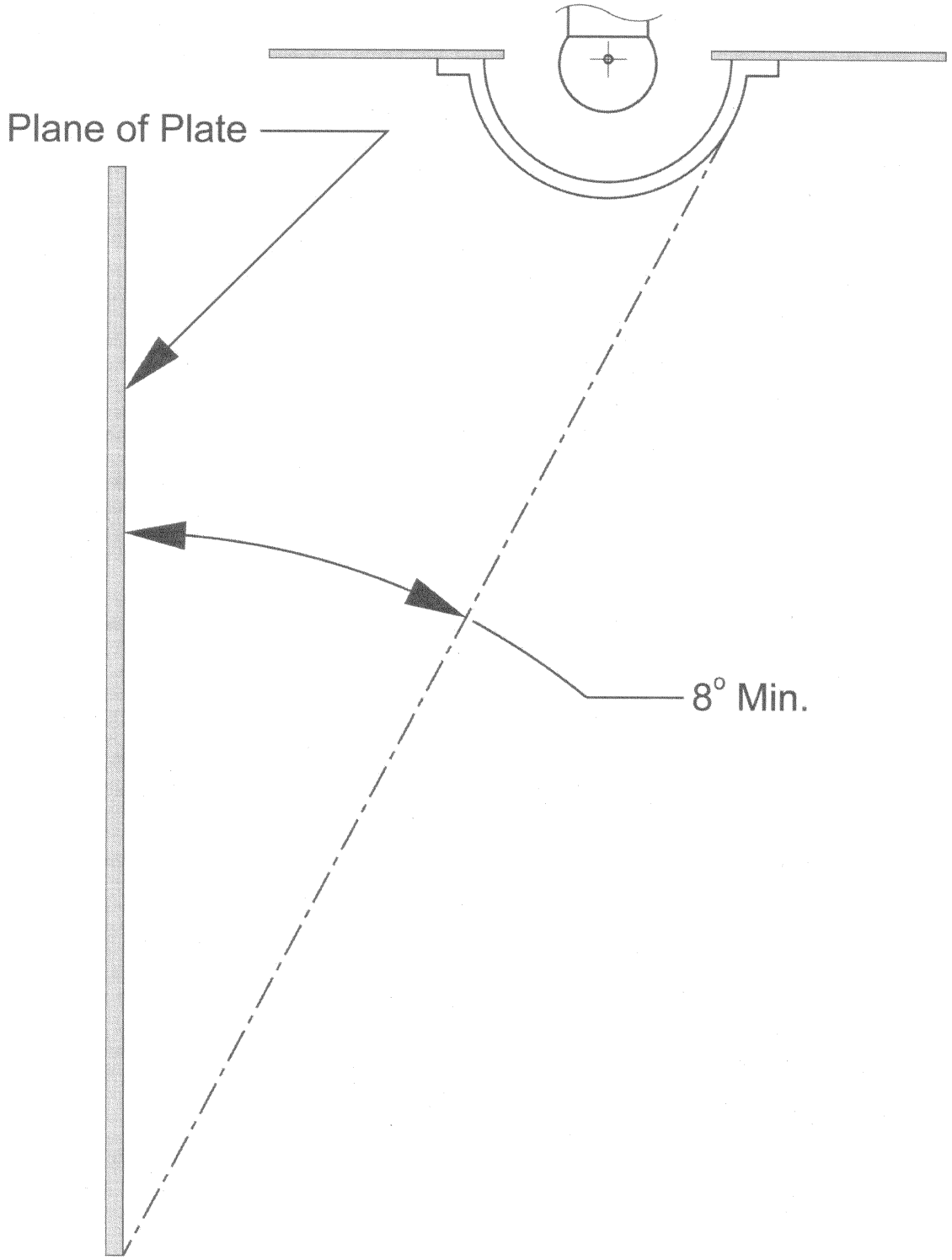

License Plate Lamp Measurement of Incident Light Angle

FIGURE 20

CAM PROFILE RADII*

Point	Radius, in.	Point	Radius, in.	Point	Radius, in.	Point	Radius, in.
1	0.5000	6	0.5504	11	0.6284	16	0.7064
2	0.5000	7	0.5660	12	0.6440	17	0.7220
3	0.5086	8	0.5816	13	0.6596	18	0.7376
4	0.5192	9	0.5972	14	0.6752	19	0.7466
5	0.5348	10	0.6128	15	0.6908	20	0.7500

* The cam width is between 1/2 and 1 in.

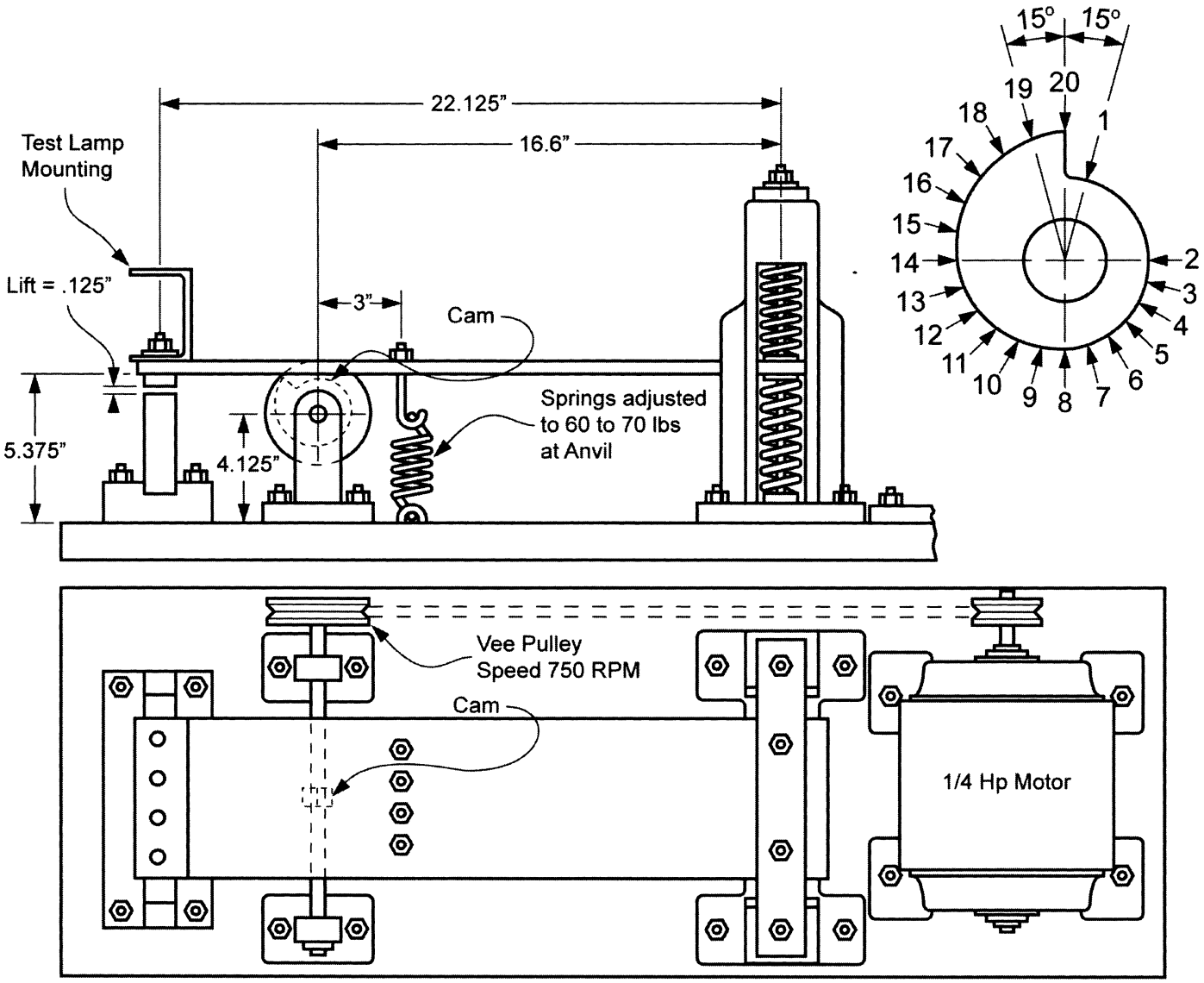

FIGURE 21 VIBRATION TEST MACHINE

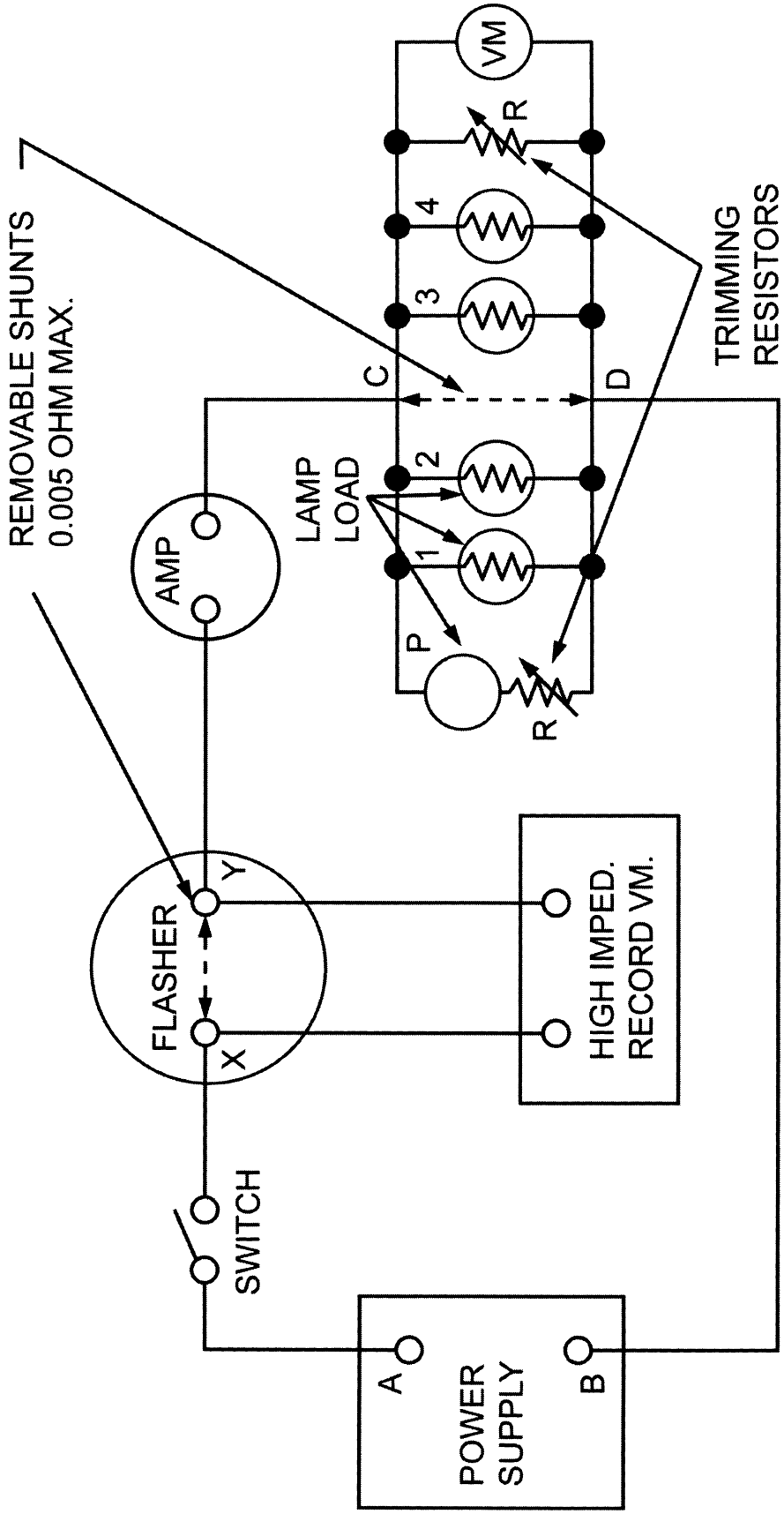

FLASHER STANDARD TEST CIRCUIT
FIGURE 22

Appendix to § 571.108: Table of Contents

Sec.
571.108 Standard No. 108; Lamps, reflective devices, and associated equipment.
S1 *Scope.*
S2 *Purpose.*
S3 *Application.*
S4 *Definitions.*
S5 *References to SAE publications.*
S5.2 *Incorporation by reference.*
S6 *Vehicle requirements.*
S6.1 *Required lamps, reflective devices, and associated equipment by vehicle type.*
S6.1.1 *Quantity.*
S6.1.1.1 *Conspicuity systems.*
S6.1.1.2 *High-mounted stop lamps.*
S6.1.1.3 *Truck tractor rear turn signal lamps.*
S6.1.1.4 *Daytime running lamps.*
S6.1.2 *Color.*
S6.1.3 *Mounting location.*
S6.1.3.3 *License plate lamp.*
S6.1.3.4 *High-mounted stop lamp.*
S6.1.3.4.1 *Interior mounting.*
S6.1.3.4.2 *Accessibility.*
S6.1.3.5 *Headlamp beam mounting.*
S6.1.3.5.1 *Vertical headlamp arrangement.*
S6.1.3.5.2 *Horizontal headlamp arrangement.*
S6.1.3.6 *Auxiliary lamps mounted near identification lamps.*
S6.1.4 *Mounting height.*
S6.1.4.1 *High-mounted stop lamps.*
S6.1.5 *Activation.*
S6.1.5.1 *Hazard warning signal.*
S6.1.5.2 *Simultaneous beam activation.*
S6.2 *Impairment.*
S6.2.3 *Headlamp obstructions.*
S6.3 *Equipment combinations.*
S6.4 *Lens area, visibility and school bus signal lamp aiming.*
S6.4.1 *Effective projected luminous lens area requirements.*
S6.4.2 *Visibility.*
S6.4.3 *Visibility options.*
S6.4.3(a) *Lens area option.*
S6.4.3(b) *Luminous intensity option.*
S6.4.4 *Legacy visibility alternative.*
S6.4.5 *School bus signal lamp aiming.*
S6.5 *Marking.*
S6.5.1 *DOT marking.*
S6.5.2 *DRL marking.*
S6.5.3 *Headlamp markings.*
S6.5.3.1 *Trademark.*
S6.5.3.2 *Voltage and trade number.*
S6.5.3.3 *Sealed beam headlamp markings.*
S6.5.3.4 *Replaceable bulb headlamp markings.*
S6.5.3.5 *Additional headlamp markings.*
S6.6 *Associated equipment.*
S6.6.3 *License plate holder.*
S6.7 *Replacement equipment.*
S6.7.1 *General.*
S6.7.2 *Version of this standard.*
S7 *Signal lamp requirements.*
S7.1 *Turn signal lamps.*
S7.1.1 *Front turn signal lamps.*
S7.1.1.1 *Number.*
S7.1.1.2 *Color of light.*
S7.1.1.3 *Mounting location.*
S7.1.1.4 *Mounting height.*
S7.1.1.5 *Activation.*
S7.1.1.6 *Effective projected luminous lens area.*
S7.1.1.7 *Visibility.*
S7.1.1.8 *Indicator.*
S7.1.1.9 *Markings.*
S7.1.1.10 *Spacing to other lamps.*
S7.1.1.10.2 *Spacing measurement for non-reflector lamps.*
S7.1.1.10.3 *Spacing measurement for lamps with reflectors.*
S7.1.1.10.4 *Spacing based photometric multipliers.*
S7.1.1.11 *Multiple compartments and multiple lamps.*
S7.1.1.11.4 *Lamps installed on vehicles 2032 mm or more in overall width.*
S7.1.1.12 *Ratio to parking lamps and clearance lamps.*
S7.1.1.13 *Photometry.*
S7.1.1.14 *Physical tests.*
S7.1.2 *Rear turn signal lamps.*
S7.1.2.1 *Number.*
S7.1.2.2 *Color of light.*
S7.1.2.3 *Mounting location.*
S7.1.2.4 *Mounting height.*
S7.1.2.5 *Activation.*
S7.1.2.6 *Effective projected luminous lens area.*
S7.1.2.7 *Visibility.*
S7.1.2.8 *Indicator.*
S7.1.2.9 *Markings.*
S7.1.2.10 *Spacing to other lamps.*
S7.1.2.11 *Multiple compartments and multiple lamps.*
S7.1.2.11.4 *Lamps installed on vehicles 2032 mm or more in overall width.*
S7.1.2.12 *Ratio to taillamps and clearance lamps.*
S7.1.2.13 *Photometry.*
S7.1.2.14 *Physical tests.*
S7.1.3 *Combined lamp bulb indexing.*
S7.2 *Taillamps.*
S7.2.1 *Number.*
S7.2.2 *Color of light.*
S7.2.3 *Mounting location.*
S7.2.4 *Mounting height.*
S7.2.5 *Activation.*
S7.2.6 *Effective projected luminous lens area.*
S7.2.7 *Visibility.*
S7.2.8 *Indicator.*
S7.2.9 *Markings.*
S7.2.10 *Spacing to other lamps.*
S7.2.11 *Multiple compartments and multiple lamps.*
S7.2.11.4 *Taillamps installed on vehicles 2032 mm or more in overall width.*
S7.2.12 *Ratio.*
S7.2.13 *Photometry.*
S7.2.14 *Physical tests.*
S7.3 *Stop lamps.*
S7.3.1 *Number.*
S7.3.2 *Color of light.*
S7.3.3 *Mounting location.*
S7.3.4 *Mounting height.*
S7.3.5 *Activation.*
S7.3.6 *Effective projected luminous lens area.*
S7.3.7 *Visibility.*
S7.3.8 *Indicator.*
S7.3.9 *Markings.*
S7.3.10 *Spacing to other lamps.*
S7.3.11 *Multiple compartments and multiple lamps.*
S7.3.11.4 *Lamps installed on vehicles 2032 mm or more in overall width.*
S7.3.12 *Ratio to taillamps.*
S7.3.13 *Photometry.*
S7.3.14 *Physical tests.*
S7.3.15 *Combined lamp bulb indexing.*
S7.4 *Side marker lamps.*
S7.4.1 *Number.*
S7.4.2 *Color of light.*
S7.4.3 *Mounting location.*
S7.4.4 *Mounting height.*
S7.4.5 *Activation.*
S7.4.6 *Effective projected luminous lens area.*
S7.4.7 *Visibility.*
S7.4.8 *Indicator.*
S7.4.9 *Markings.*
S7.4.10 *Spacing to other lamps.*
S7.4.11 *Multiple compartments and multiple lamps.*
S7.4.12 *Ratio.*
S7.4.13 *Photometry.*
S7.4.13.2 *Inboard photometry.*
S7.4.14 *Physical tests.*
S7.5 *Clearance and identification lamps.*
S7.5.1 *Number.*
S7.5.2 *Color of light.*
S7.5.3 *Mounting location.*
S7.5.4 *Mounting height.*
S7.5.5 *Activation.*
S7.5.6 *Effective projected luminous lens area.*
S7.5.7 *Visibility.*
S7.5.8 *Indicator.*
S7.5.9 *Markings.*
S7.5.10 *Spacing to other lamps.*
S7.5.11 *Multiple compartments and multiple lamps.*
S7.5.12 *Ratio.*
S7.5.12.1 *Clearance lamps.*
S7.5.12.2 *Identification lamps.*
S7.5.13 *Photometry.*
S7.5.14 *Physical tests.*
S7.6 *Backup lamps.*
S7.6.1 *Number.*
S7.6.2 *Color of light.*
S7.6.3 *Mounting location.*
S7.6.4 *Mounting height.*
S7.6.5 *Activation.*
S7.6.6 *Effective projected luminous lens area.*
S7.6.7 *Visibility.*
S7.6.8 *Indicator.*
S7.6.9 *Markings.*
S7.6.10 *Spacing to other lamps.*
S7.6.11 *Multiple compartments and multiple lamps.*
S7.6.12 *Ratio.*
S7.6.13 *Photometry.*
S7.6.14 *Physical tests.*
S7.7 *License plate lamps.*
S7.7.1 *Number.*
S7.7.2 *Color of light.*
S7.7.3 *Mounting location.*
S7.7.4 *Mounting height.*
S7.7.5 *Activation.*
S7.7.6 *Effective projected luminous lens area.*
S7.7.7 *Visibility.*
S7.7.8 *Indicator.*
S7.7.9 *Markings.*
S7.7.10 *Spacing to other lamps.*
S7.7.11 *Multiple compartments and multiple lamps.*
S7.7.12 *Ratio.*
S7.7.13 *Photometry.*
S7.7.14 *Physical tests.*
S7.7.15 *Installation.*
S7.7.15.4 *Incident light from single lamp.*
S7.7.15.5 *Incident light from multiple lamps.*

S7.8 *Parking lamps.*
S7.8.1 *Number.*
S7.8.2 *Color of light.*
S7.8.3 *Mounting location.*
S7.8.4 *Mounting height.*
S7.8.5 *Activation.*
S7.8.6 *Effective projected luminous lens area.*
S7.8.7 *Visibility.*
S7.8.8 *Indicator.*
S7.8.9 *Markings.*
S7.8.10 *Spacing to other lamps.*
S7.8.11 *Multiple compartments and multiple lamps.*
S7.8.12 *Ratio.*
S7.8.13 *Photometry.*
S7.8.14 *Physical tests.*
S7.9 *High-mounted stop lamps.*
S7.9.1 *Number.*
S7.9.2 *Color of light.*
S7.9.3 *Mounting location.*
S7.9.4 *Mounting height.*
S7.9.5 *Activation.*
S7.9.6 *Effective projected luminous lens area.*
S7.9.7 *Visibility.*
S7.9.8 *Indicator.*
S7.9.9 *Markings.*
S7.9.10 *Spacing to other lamps.*
S7.9.11 *Multiple compartments and multiple lamps.*
S7.9.12 *Ratio.*
S7.9.13 *Photometry.*
S7.9.14 *Physical tests.*
S7.10 *Daytime running lamps (DRLs).*
S7.10.1 *Number.*
S7.10.2 *Color of light.*
S7.10.3 *Mounting location.*
S7.10.4 *Mounting height.*
S7.10.5 *Activation.*
S7.10.6 *Effective projected luminous lens area.*
S7.10.7 *Visibility.*
S7.10.8 *Indicator.*
S7.10.9 *Markings.*
S7.10.10 *Spacing to other lamps.*
S7.10.10.1 *Spacing to turn signal lamps.*
S7.10.11 *Multiple compartments and multiple lamps.*
S7.10.12 *Ratio.*
S7.10.13 *Photometry.*
S7.10.14 *Physical tests.*
S7.11 *School bus signal lamps.*
S7.11.1 *Number.*
S7.11.2 *Color of light.*
S7.11.3 *Mounting location.*
S7.11.4 *Mounting height.*
S7.11.5 *Activation.*
S7.11.6 *Effective projected luminous lens area.*
S7.11.7 *Visibility.*
S7.11.8 *Indicator.*
S7.11.9 *Markings.*
S7.11.10 *Spacing to other lamps.*
S7.11.11 *Multiple compartments and multiple lamps.*
S7.11.12 *Ratio.*
S7.11.13 *Photometry.*
S7.11.14 *Physical tests.*
S8 *Reflective device requirements.*
S8.1 *Reflex reflectors.*
S8.1.1 *Number.*
S8.1.2 *Color.*
S8.1.3 *Mounting location.*
S8.1.4 *Mounting height.*
S8.1.5 *Activation.*
S8.1.6 *Effective projected luminous lens area.*
S8.1.7 *Visibility.*
S8.1.8 *Indicator.*
S8.1.9 *Markings.*
S8.1.10 *Spacing to other lamps or reflective devices.*
S8.1.11 *Photometry.*
S8.1.12 *Physical tests.*
S8.1.13 *Alternative side reflex reflector material.*
S8.2 *Conspicuity systems.*
S8.2.1 *Retroreflective sheeting.*
S8.2.1.2 *Retroreflective sheeting material.*
S8.2.1.3 *Certification marking.*
S8.2.1.4 *Application pattern.*
S8.2.1.4.1 *Alternating red and white materials.*
S8.2.1.5 *Application location.*
S8.2.1.6 *Application spacing.*
S8.2.1.7 *Photometry.*
S8.2.2 *Conspicuity reflex reflectors.*
S8.2.2.1 *Certification marking.*
S8.2.2.2 *Application pattern.*
S8.2.2.2.1 *Alternating red and white materials.*
S8.2.2.2.2 *White material.*
S8.2.2.3 *Photometry.*
S8.2.3 *Conspicuity system installation on trailers.*
S8.2.3.1 *Trailer rear.*
S8.2.3.1.1 *Element 1-alternating red and white materials.*
S8.2.3.1.2 *Element 2-white.*
S8.2.3.1.3 *Element 3-alternating red and white materials.*
S8.2.3.2 *Trailer side-alternating red and white materials.*
S8.2.4 *Conspicuity system installation on truck tractors.*
S8.2.4.1 *Element 1-alternating red and white materials.*
S8.2.4.2 *Element 2-white.*
S9 *Associated equipment requirements.*
S9.1 *Turn signal operating unit.*
S9.1.2 *Physical tests.*
S9.2 *Turn signal flasher.*
S9.2.2 *Physical tests.*
S9.3 *Turn signal pilot indicator.*
S9.3.4 *Indicator size and color.*
S9.3.6 *Turn signal lamp failure.*
S9.4 *Headlamp beam switching device.*
S9.4.1 *Semi-automatic headlamp beam switching device.*
S9.4.1.1 *Operating instructions.*
S9.4.1.2 *Manual override.*
S9.4.1.3 *Fail safe operation.*
S9.4.1.4 *Automatic dimming indicator.*
S9.4.1.5 *Lens accessibility.*
S9.4.1.6 *Mounting height.*
S9.4.1.7 *Physical tests.*
S9.5 *Upper beam headlamp indicator.*
S9.5.1 *Indicator size and location.*
S9.6 *Vehicular hazard warning signal operating unit.*
S9.6.2 *Operating unit switch.*
S9.6.3 *Physical tests.*
S9.7 *Vehicular hazard warning signal flasher.*
S9.7.2 *Physical tests.*
S9.8 *Vehicular hazard warning signal pilot indicator.*
S9.8.4 *Indicator size and color.*
S10 *Headlighting system requirements.*
S10.1 *Vehicle headlighting systems.*
S10.2 *Aiming.*
S10.3 *Number.*
S10.4 *Color of light.*
S10.5 *Mounting location.*
S10.6 *Mounting height.*
S10.7 *Activation.*
S10.8 *Effective projected luminous lens area.*
S10.9 *Visibility.*
S10.10 *Indicator.*
S10.11 *Markings.*
S10.12 *Spacing to other lamps.*
S10.13 *Sealed beam headlighting systems.*
S10.13.1 *Installation.*
S10.13.2 *Simultaneous aim.*
S10.13.3 *Photometry.*
S10.13.4 *Physical tests.*
S10.14 *Integral beam headlighting systems.*
S10.14.1 *Installation.*
S10.14.2 *Aimability.*
S10.14.3 *Simultaneous aim.*
S10.14.4 *Markings.*
S10.14.5 *Additional light sources.*
S10.14.6 *Photometry.*
S10.14.7 *Physical tests.*
S10.15 *Replaceable bulb headlighting systems.*
S10.15.1 *Installation.*
S10.15.2 *Aiming restrictions.*
S10.15.3 *Replacement lens reflector units.*
S10.15.4 *Markings.*
S10.15.5 *Additional light sources.*
S10.15.6 *Photometry.*
S10.15.7 *Physical tests.*
S10.16 *Combination headlighting systems.*
S10.16.1 *Installation.*
S10.16.2 *Photometry.*
S10.16.3 *Physical tests.*
S10.17 *Motorcycle headlighting systems.*
S10.17.1 *Installation.*
S10.17.1.1 *Single headlamp.*
S10.17.1.2 *Two headlamps with both beams.*
S10.17.1.3 *Two headlamps, upper beam and lower beam.*
S10.17.2 *Motorcycle replaceable bulb headlamp marking.*
S10.17.3 *Photometry.*
S10.17.4 *Physical tests.*
S10.17.5 *Motorcycle headlamp modulation system.*
S10.17.5.1. *Modulation.*
S10.17.5.2 *Replacement modulators.*
S10.17.5.2.1 *Replacement performance.*
S10.17.5.2.2 *Replacement instructions.*
S10.18 *Headlamp aimability performance requirements.*
S10.18.1 *Headlamp mounting and aiming.*
S10.18.2 *Headlamp aiming systems.*
S10.18.3 *Aim adjustment interaction.*
S10.18.4 *Horizontal adjustment-visually aimed headlamp.*
S10.18.5 *Optical axis marking.*
S10.18.5.1 *Optical axis marking-vehicle.*
S10.18.5.2 *Optical axis marking-lamp.*
S10.18.5.3 *Optical axis marking-visual aim headlamp.*
S10.18.6 *Moveable reflectors.*
S10.18.7 *External aiming.*
S10.18.7.1 *Headlamp aiming device locating plates.*
S10.18.7.2 *Nonadjustable headlamp aiming device locating plates.*
S10.18.8 *On-vehicle aiming.*
S10.18.8.1 *Aim.*
S10.18.8.1.1 *Vertical aim.*
S10.18.8.1.2 *Horizontal aim.*

S10.18.8.2 *Aiming instructions.*
S10.18.8.3 *Permanent calibration.*
S10.18.8.4 *Replacement units.*
S10.18.8.5 *Physical tests.*
S10.18.9 *Visual/optical aiming.*
S10.18.9.1 *Vertical aim, lower beam.*
S10.18.9.1.1 *Vertical position of the cutoff.*
S10.18.9.1.2 *Vertical gradient.*
S10.18.9.1.3 *Horizontal position of the cutoff.*
S10.18.9.1.4 *Maximum inclination of the cutoff.*
S10.18.9.1.5 *Measuring the cutoff parameter.*
S10.18.9.2 *Horizontal aim, lower beam.*
S10.18.9.3 *Vertical aim, upper beam.*
S10.18.9.4 *Horizontal aim, upper beam.*
S10.18.9.5 *Photometry.*
S10.18.9.6 *Visual/optical identification marking.*
S11 *Replaceable light source requirements.*
S11.1 *Markings.*
S11.2 *Ballast markings.*
S11.3 *Gas discharge laboratory life.*
S11.4 *Physical tests.*
S12 *Headlamp concealment device requirements.*
S12.7 *Certification election.*
S13 *Replaceable headlamp lens requirements.*
S14 *Physical and photometry test procedures and performance requirements.*
S14.1 *General test procedures and performance requirements.*
S14.1.2 *Plastic optical materials.*
S14.1.4 *Samples.*
S14.1.5 *Laboratory facilities.*
S14.2 *Photometric test procedures.*
S14.2.1 *Photometry measurements for all lamps except license lamps, headlamps, and DRLs.*
S14.2.1.1 *Mounting.*
S14.2.1.2 *School bus signal lamp aiming.*
S14.2.1.3 *Measurement distance.*
S14.2.1.4 *Location of test points.*
S14.2.1.5 *Multiple compartment and multiple lamp photometry of turn signal lamps, stop lamps, and taillamps.*
S14.2.1.6 *Bulbs.*
S14.2.2 *License plate lamp photometry.*
S14.2.2.1 *Illumination surface.*
S14.2.2.2 *Test stations.*
S14.2.3 *Reflex reflector and retroreflective sheeting photometry.*
S14.2.3.1 *Mounting.*
S14.2.3.2 *Illumination source.*
S14.2.3.3 *Measurement distance.*
S14.2.3.4 *Test setup.*
S14.2.3.5 *Photodetector .*
S14.2.3.6 *Photometry surface.*
S14.2.3.7 *Procedure.*
S14.2.3.8 *Measurements.*
S14.2.3.8.1 *Reflex reflectors.*
S14.2.3.8.2 *Retroreflective sheeting.*
S14.2.3.8.3 *Reflex reflector photometry measurement adjustments.*
S14.2.4 *Daytime running lamp (DRL) photometry measurements.*
S14.2.5 *Headlamp photometry measurements.*
S14.2.5.1 *Mounting.*
S14.2.5.3 *Measurement distance.*
S14.2.5.4 *Seasoning and test voltage.*
S14.2.5.5 *Aiming.*
S14.2.5.5.1 *Mechanically aimable headlamps using an external aimer.*
S14.2.5.5.2 *Mechanically aimable headlamps equipped with a VHAD.*
S14.2.5.5.3 *Visually aimable lower beam headlamps-vertical aim.*
S14.2.5.5.4 *Visually aimable lower beam headlamps-horizontal aim.*
S14.2.5.5.5 *Visually aimable upper beam headlamps-vertical aim.*
S14.2.5.5.6 *Visually aimable upper beam headlamps-horizontal aim.*
S14.2.5.5.7 *Simultaneous aim Type F sealed beam headlamps and beam contributor integral beam headlamps.*
S14.2.5.5.8 *Motorcycle headlamp-upper beam headlamps designed to comply with Table XX.*
S14.2.5.5.9 *Motorcycle headlamp-lower beam headlamps designed to comply with Table XX.*
S14.2.5.6 *Positioner.*
S14.2.5.7 *Photometer.*
S14.2.5.7.2 *Sensor.*
S14.2.5.8 *Location of test points.*
S14.2.5.9 *Beam contributor photometry measurements.*
S14.2.5.10 *Moveable reflector aimed headlamp photometry measurements.*
S14.3 *Motorcycle headlamp out of focus test procedure and performance requirements.*
S14.3.1 *Procedure.*
S14.3.2 *Performance requirements.*
S14.4 *General test procedures and performance requirements.*
S14.4.1 *Color test.*
S14.4.1.1 *Samples.*
S14.4.1.2 *General procedure.*
S14.4.1.3 *Visual method.*
S14.4.1.3.1 *Visual method procedure.*
S14.4.1.3.2 *Visual method performance requirements.*
S14.4.1.3.2.1 *Red.*
S14.4.1.3.2.2 *Yellow (Amber).*
S14.4.1.3.2.3 *White.*
S14.4.1.4 *Tristimulus method.*
S14.4.1.4.1 *Tristimulus method procedure.*
S14.4.1.4.2 *Tristimulus method performance requirements.*
S14.4.1.4.2.1 *Red.*
S14.4.1.4.2.2 *Yellow (Amber).*
S14.4.1.4.2.3 *White (achromatic).*
S14.4.2 *Plastic optical materials tests.*
S14.4.2.1 *Samples.*
S14.4.2.2 *Outdoor exposure test.*
S14.4.2.2.3 *Procedure.*
S14.4.2.2.4 *Performance requirements.*
S14.4.2.3 *Heat test.*
S14.4.2.3.1 *Procedure.*
S14.4.2.3.2 *Performance requirements.*
S14.5 *Signal lamp and reflective device physical test procedures and performance requirements.*
S14.5.1 *Vibration test.*
S14.5.1.1 *Procedure.*
S14.5.1.2 *Performance requirements.*
S14.5.2 *Moisture test.*
S14.5.2.1 *Procedure.*
S14.5.2.2 *Performance requirements.*
S14.5.3 *Dust test.*
S14.5.3.1 *Samples.*
S14.5.3.2 *Procedure.*
S14.5.3.3 *Performance requirements.*
S14.5.4 *Corrosion test.*
S14.5.4.1 *Procedure.*
S14.5.4.2 *Performance requirements.*
S14.6 *Headlamp physical test procedures and performance requirements.*
S14.6.1 *Abrasion test.*
S14.6.1.1 *Procedure.*
S14.6.1.1.1 *Abrading pad.*
S14.6.1.1.2 *Abrading pad alignment.*
S14.6.1.1.3 *Abrasion test procedure.*
S14.6.1.2 *Performance requirements.*
S14.6.2 *Chemical resistance test.*
S14.6.2.1 *Procedure.*
S14.6.2.1.1 *Test fluids.*
S14.6.2.1.2 *Fluid application.*
S14.6.2.1.3 *Test duration.*
S14.6.2.2 *Performance requirements.*
S14.6.3 *Corrosion test.*
S14.6.3.1 *Procedure.*
S14.6.3.2 *Performance requirements.*
S14.6.4 *Corrosion-connector test.*
S14.6.4.1 *Procedure.*
S14.6.4.2 *Performance requirements.*
S14.6.5 *Dust test.*
S14.6.5.1 *Procedure.*
S14.6.5.2 *Performance requirements.*
S14.6.6 *Temperature cycle test and internal heat test.*
S14.6.6.1 *Samples.*
S14.6.6.2 *General procedure.*
S14.6.6.3 *Temperature cycle test.*
S14.6.6.3.1 *Procedure.*
S14.6.6.3.2 *Performance requirements.*
S14.6.6.4 *Internal heat test.*
S14.6.6.4.1 *Procedure.*
S14.6.6.4.2 *Performance requirements.*
S14.6.7 *Humidity test.*
S14.6.7.1 *Procedure.*
S14.6.7.2 *Performance requirements.*
S14.6.8 *Vibration test.*
S14.6.8.1 *Samples.*
S14.6.8.2 *Procedure.*
S14.6.8.3 *Performance requirements.*
S14.6.9 *Sealing test.*
S14.6.9.1 *Procedure.*
S14.6.9.2 *Performance requirements.*
S14.6.10 *Chemical resistance test of reflectors of replaceable lens headlamps.*
S14.6.10.1 *Procedure.*
S14.6.10.1.1 *Test fluids.*
S14.6.10.1.2 *Fluid application.*
S14.6.10.1.3 *Test duration.*
S14.6.10.2 *Performance requirements.*
S14.6.11 *Corrosion resistance test of reflectors of replaceable lens headlamps.*
S14.6.11.1 *Procedure.*
S14.6.11.2 *Performance requirements.*
S14.6.12 *Inward force test.*
S14.6.12.1 *Procedure.*
S14.6.12.2 *Performance requirements.*
S14.6.13 *Torque deflection test.*
S14.6.13.1 *Procedure.*
S14.6.13.2 *Performance requirements.*
S14.6.14 *Retaining ring test.*
S14.6.14.1 *Procedure.*
S14.6.14.2 *Performance requirements.*
S14.6.15 *Headlamp connector test.*
S14.6.15.1 *Procedure.*
S14.6.15.2 *Performance requirements.*
S14.6.16 *Headlamp wattage test.*
S14.6.16.1 *Procedure.*
S14.6.16.2 *Performance requirements.*
S14.6.17 *Aiming adjustment test-laboratory.*
S14.6.17.1 *Procedure.*
S14.6.17.2 *Performance requirements.*
S14.6.18 *Aiming adjustment test-on vehicle.*
S14.6.18.1 *Procedure.*
S14.6.18.2 *Performance requirements.*
S14.7 *Replaceable light source physical test procedures and performance requirements.*

S14.7.1 *Deflection test for replaceable light sources.*
S14.7.1.1 *Procedure.*
S14.7.1.2 *Performance requirements.*
S14.7.2 *Pressure test for replaceable light sources.*
S14.7.2.1 *Procedure.*
S14.7.2.2 *Performance requirements.*
S14.7.3 *Replaceable light source power and flux measurement procedure.*
S14.7.3.1 *Seasoning.*
S14.7.3.1.1 *Resistive filament source.*
S14.7.3.1.2 *Discharge source.*
S14.7.3.2 *Test voltage.*
S14.7.3.3 *Luminous flux measurement.*
S14.7.3.3.3.2 *Discharge light source setup.*
S14.8 *Vehicle headlamp aiming devices (VHAD) physical test procedures and performance requirements.*
S14.8.1 *Samples.*
S14.8.2 *Scale graduation test.*
S14.8.2.1 *Procedure.*
S14.8.2.2 *Performance requirements.*
S14.8.3 *Cold scale graduation test.*
S14.8.3.1 *Procedure.*
S14.8.3.2 *Performance requirements.*
S14.8.4 *Hot scale graduation test.*
S14.8.4.1 *Procedure.*
S14.8.4.2 *Performance requirements.*
S14.8.5 *Thermal cycle test.*
S14.8.5.1 *Procedure.*
S14.8.5.2 *Performance requirements.*
S14.8.6 *Corrosion test.*
S14.8.6.1 *Procedure.*
S14.8.6.2 *Performance requirements.*
S14.8.7 *Photometry test.*
S14.8.7.1 *Procedure.*
S14.8.7.2 *Performance requirements.*
S14.9 *Associated equipment physical test procedures and performance requirements.*
S14.9.1 *Turn signal operating unit durability test.*
S14.9.1.1 *Power supply specifications.*
S14.9.1.2 *Procedure.*
S14.9.1.3 *Performance requirements.*
S14.9.2 *Vehicular hazard warning signal operating unit durability test.*
S14.9.2.1 *Procedure.*
S14.9.2.2 *Performance requirements.*
S14.9.3 *Turn signal flasher and vehicular hazard warning flasher tests.*
S14.9.3.1 *Standard test circuit.*
S14.9.3.1.1 *Test circuit setup.*
S14.9.3.2 *Power supply specifications.*
S14.9.3.2.1 *Starting time, voltage drop, and flash rate and percent current ''on'' time tests.*
S14.9.3.2.2 *Durability tests.*
S14.9.3.3 *Turn signal flasher starting time test.*
S14.9.3.3.1 *Samples.*
S14.9.3.3.2 *Procedure.*
S14.9.3.3.3 *Performance requirements.*
S14.9.3.4 *Turn signal flasher voltage drop test.*
S14.9.3.4.1 *Samples.*
S14.9.3.4.2 *Procedure.*
S14.9.3.4.3 *Performance requirements.*
S14.9.3.5 *Turn signal flasher flash rate and percent current ''on'' time test.*
S14.9.3.5.1 *Samples.*
S14.9.3.5.2 *Procedure.*
S14.9.3.5.3 *Performance requirements.*
S14.9.3.6 *Turn signal flasher durability test.*
S14.9.3.6.1 *Samples.*
S14.9.3.6.2 *Procedure.*
S14.9.3.6.3 *Performance requirements.*
S14.9.3.7 *Vehicular hazard warning signal flasher starting time test.*
S14.9.3.7.1 *Samples.*
S14.9.3.7.2 *Procedure.*
S14.9.3.7.3 *Performance requirements.*
S14.9.3.8 *Vehicular hazard warning signal flasher voltage drop test.*
S14.9.3.8.1 *Samples.*
S14.9.3.8.2 *Procedure.*
S14.9.3.8.3 *Performance requirements.*
S14.9.3.9 *Vehicular hazard warning signal flasher flash rate and percent ''on'' time test.*
S14.9.3.9.1 *Samples.*
S14.9.3.9.2 *Procedure.*
S14.9.3.9.3 *Performance requirements.*
S14.9.3.10 *Vehicular hazard warning signal flasher durability test.*
S14.9.3.10.1 *Samples.*
S14.9.3.10.2 *Procedure.*
S14.9.3.10.3 *Performance requirements.*
S14.9.3.11 *Semiautomatic headlamp beam switching device tests.*
S14.9.3.11.1 *Test conditions.*
S14.9.3.11.2 *Sensitivity test.*
S14.9.3.11.2.1 *Samples.*
S14.9.3.11.2.2 *Procedure.*
S14.9.3.11.2.3 *Performance requirements.*
S14.9.3.11.2.3.1 *Operating limits.*
S14.9.3.11.3 *Voltage regulation test.*
S14.9.3.11.3.1 *Procedure.*
S14.9.3.11.3.2 *Performance requirements.*
S14.9.3.11.4 *Manual override test.*
S14.9.3.11.4.1 *Procedure.*
S14.9.3.11.4.2 *Performance requirements.*
S14.9.3.11.5 *Warmup test.*
S14.9.3.11.5.1 *Procedure.*
S14.9.3.11.5.2 *Performance requirements.*
S14.9.3.11.6 *Temperature test.*
S14.9.3.11.6.1 *Procedure.*
S14.9.3.11.6.2 *Performance requirements.*
S14.9.3.11.7 *Dust test.*
S14.9.3.11.7.1 *Procedure.*
S14.9.3.11.7.2 *Performance requirements.*
S14.9.3.11.8 *Corrosion test.*
S14.9.3.11.8.1 *Procedure.*
S14.9.3.11.8.2 *Performance requirements.*
S14.9.3.11.9 *Vibration test.*
S14.9.3.11.9.1 *Procedure.*
S14.9.3.11.9.2 *Performance requirements.*
S14.9.3.11.10 *Sunlight test.*
S14.9.3.11.10.1 *Procedure.*
S14.9.3.11.10.2 *Performance requirements.*
S14.9.3.11.11 *Durability test.*
S14.9.3.11.11.1 *Procedure.*
S14.9.3.11.11.2 *Performance requirements.*
S14.9.3.11.12 *Return to upper beam test.*
S14.9.3.11.12.1 *Procedure.*
S14.9.3.11.12.2 *Performance requirements.*
Table I–a *Required lamps and reflective devices—All passenger cars, multipurpose passenger vehicles (MPV), trucks, and buses*
Table I–b *Required lamps and reflective devices—All trailers*
Table I–c *Required lamps and reflective devices—All motorcycles*
Table II–a *Headlighting systems—Sealed beams*
Table II–b *Headlighting systems—Combination*
Table II–c *Headlighting systems—Integral beams*
Table II–d *Headlighting systems—Replaceable bulb*
Table III *Marking requirements location*
Table IV–a *Effective projected luminous lens area requirements*
Table IV–b *Effective projected luminous lens area requirements*
Table IV–c *Effective projected luminous lens area requirements*
Table V–a *Visibility requirements of installed lighting devices*
Table V–b *Visibility requirements of installed lighting devices—Lens area visibility option*
Table V–c *Visibility requirements of installed lighting devices—Luminous intensity visibility option*
Table V–d *Visibility requirements of installed lighting devices (Legacy visibility alternative)*
Table VI–a *Front turn signal lamp photometry requirements*
Table VI–b *Front turn signal lamp photometry requirements*
Table VII *Rear turn signal lamp photometry requirements*
Table VIII *Taillamp photometry requirements*
Table IX *Stop lamp photometry requirements*
Table X *Side marker lamp photometry requirements*
Table XI *Clearance and identification lamps photometry requirements*
Table XII *Backup lamp photometry requirements*
Table XIII–a *Motorcycle turn signal lamp alternative photometry requirements*
Table XIII–b *Motor driven cycle stop lamp alternative photometry requirements*
Table XIV *Parking lamp photometry requirements*
Table XV *High-mounted stop lamp photometry requirements*
Table XVI–a *Reflex reflector photometry requirements*
Table XVI–b *Additional photometry requirements for conspicuity reflex reflectors*
Table XVI–c *Retroreflective sheeting photometry requirements*
Table XVII *School bus signal lamp photometry requirements*
Table XVIII *Headlamp upper beam photometry requirements*
Table XIX–a *Headlamp lower beam photometry requirements*
Table XIX–b *Headlamp lower beam photometry requirements*
Table XIX–c *Headlamp lower beam photometry requirements*
Table XX *Motorcycle and motor driven cycle headlamp photometry requirements*
Figure 1 *Chromaticity diagram*
Figure 2 *Flasher performance chart*
Figure 3 *Replaceable bulb headlamp aim pads*
Figure 4 *Headlamp connector test setup*
Figure 5 *Headlamp abrasion test fixture*
Figure 6 *Thermal cycle test profile*
Figure 7 *Dirt/Ambient test setup*
Figure 8 *Replaceable light source deflection test setup*
Figure 9 *Environmental test profile*
Figure 10 *Replaceable light source pressure test setup*
Figure 11 *Trailer conspicuity treatment examples*

Figure 12–1 *Trailer conspicuity detail I*
Figure 12–2 *Trailer conspicuity detail II*
Figure 13 *Tractor conspicuity treatment examples*
Figure 14 *92x150 Headlamp aim deflection test setup*
Figure 15 *Types G and H headlamp aim deflection test setup*
Figure 16 *Types A and E headlamp aim deflection test setup*
Figure 17 *Type B headlamp aim deflection test setup*
Figure 18 *Types C and D headlamp aim deflection test setup*
Figure 19 *License plate lamp target locations*
Figure 20 *License plate lamp measurement of incident light angle*
Figure 21 *Vibration test machine*
Figure 22 *Flasher standard test circuit*

Issued: August 8, 2007.

Nicole R. Nason,

Administrator.

Editorial Note: This document was received at the Office of the Federal Register on Thursday, November 8, 2007.

Note: The following appendixes will not appear in the Code of Federal Regulations.

APPENDIX A.—FMVSS NO. 108 REWRITE CROSS REFERENCE

Current FMVSS No. 108 or incorporated document citation	FMVSS No. 108 rewrite NPRM citation	FMVSS No. 108 rewrite final rule citation
S1 Scope	S1 Scope	S1 Scope.
S2 Purpose	S2 Purpose	S2 Purpose.
S3 Application (except section citation)	S3 Application	S3 Application.
S4 Definitions	S4 Definitions	S4 Definitions.
S4 Definitions—Aiming reference plane	S4 Definitions—Aiming reference plane	S4 Definitions—Aiming reference plane.
S4 Definitions—Axis of reference	S4 Definitions—Axis of reference	S4 Definitions—Axis of reference.
S4 Definitions—Beam contributor	S4 Definitions—Beam contributor	S4 Definitions—Beam contributor.
S4 Definitions—Cargo lamp	S4 Definitions—Cargo lamp	S4 Definitions—Cargo lamp.
S4 Definitions—Cutoff	S4 Definitions—Cutoff	S4 Definitions—Cutoff.
S4 Definitions—Direct reading indicator	S4 Definitions—Direct reading indicator	S4 Definitions—Direct reading indicator.
S4 Definitions—Effective light-emitting surface	S4 Definitions—Effective light-emitting surface	S4 Definitions—Effective light-emitting surface.
S4 Definitions—Effective projected luminous lens area.	S4 Definitions—Effective projected luminous lens area.	S4 Definitions—Effective projected luminous lens area.
S4 Definitions—Filament	S4 Definitions—Filament	S4 Definitions—Filament.
S4 Definitions—Flash	S4 Definitions—Flash	S4 Definitions—Flash.
S4 Definitions—Fully opened	S4 Definitions—Fully opened	S4 Definitions—Fully opened.
S4 Definitions—Headlamp concealment device	S4 Definitions—Headlamp concealment device.	S4 Definitions—Headlamp concealment device.
S4 Definitions—Headlamp test fixture	S4 Definitions—Headlamp test fixture	S4 Definitions—Headlamp test fixture.
S4 Definitions—Integral beam headlamp	S4 Definitions—Integral beam headlamp	S4 Definitions—Integral beam headlamp.
S4 Definitions—Multiple compartment lamp	S4 Definitions—Multiple compartment lamp	S4 Definitions—Multiple compartment lamp.
S4 Definitions—Multiple lamp arrangement	S4 Definitions—Multiple lamp arrangement	S4 Definitions—Multiple lamp arrangement.
S4 Definitions—Remote reading indicator	S4 Definitions—Remote reading indicator	S4 Definitions—Remote reading indicator.
S4 Definitions—Replaceable bulb headlamp	S4 Definitions—Replaceable bulb headlamp	S4 Definitions—Replaceable bulb headlamp.
S4 Definitions—Replaceable light source	S4 Definitions—Replaceable light source	S4 Definitions—Replaceable light source.
S4 Definitions—Vehicle headlamp aiming device or VHAD.	S4 Definitions—Vehicle headlamp aiming device or VHAD.	S4 Definitions—Vehicle headlamp aiming device or VHAD.
S4 Definitions—Visually/optically aimable headlamp.	S4 Definitions—Visually/optically aimable headlamp.	S4 Definitions—Visually/optically aimable headlamp.
S5.1.1	S6.1.1 Quantity	S6.1.1 Quantity.
S5.1.1	S6.6 Associated equipment	S6.6.1 All except trailers.
S5.1.1	S6.6 Associated equipment	S6.6.2 All except trailers and motorcycles.
S5.1.1.1 Truck tractor exemption—TS	S6.1.1.3 Truck tractor rear turn signal lamps	S6.1.1.3.
S5.1.1.1 Truck tractor exemption—TS	Table I Number and color	Table I–a Number and color.
S5.1.1.1 Truck tractor exemption—TS	Table VII footnote 6	Table VII footnote 6.
S5.1.1.2 Truck tractor exemption	Table I Number and color	Table I–a Number and color.
S5.1.1.3 Intermediate side marker exemption	Table I Number and color—Intermediate side marker lamps.	Table I–a Number and color—Intermediate side marker lamps.
S5.1.1.3 Intermediate side marker exemption	Table I Number and color—Intermediate side marker lamps.	Table I–b Number and color—Intermediate side marker lamps.
S5.1.1.3 Intermediate side marker exemption	S7.4.1.1 Inboard photometry	S7.4.13.2 Inboard photometry.
S5.1.1.4 Alternative side reflex material	S7.10.1.1 Alternative side reflex reflectors	S8.1.13 Alternative side reflex reflector material.
S5.1.1.4 Alternative side reflex material	Table I Lighting device	Table I–a Lighting device.
S5.1.1.4 Alternative side reflex material	Table I Lighting device	Table I–b Lighting device.
S5.1.1.4 Alternative side reflex material	Table I Lighting device	Table I–c Lighting device.
S5.1.1.5	S7.14.1 Turn signal operating unit	S9.1.1 Canceling.
S5.1.1.6	Table VIII footnote 2	Table VIII footnote 2.
S5.1.1.6	Table XIV footnote 2	Table XIV footnote 2.
S5.1.1.6	S7.2.1 Photometry	S7.2.13 Photometry.
S5.1.1.6	S7.8.1 Photometry	S7.8.13 Photometry.
S5.1.1.7 Motorcycle turn signal lamp	S7.1.2.1 Photometry	S7.1.2.13.2 Motorcycle alternative.
S5.1.1.7 Motorcycle turn signal lamp	S7.1.1.1; S7.1.2.1	Table XIII–a Motorcycle turn signal lamp—Individual point photometry.
S5.1.1.7 Motorcycle turn signal lamp	S7.1.1.1; S7.1.2.1	Table XIII–a Motorcycle turn signal lamp—Group photometry.
S5.1.1.7 Motorcycle turn signal lamp	S7.1.1.1; S7.1.2.1	Table XIII–a Motorcycle turn signal lamp—Photometric ratio.
S5.1.1.7 Motorcycle turn signal lamp	S7.1.1.1 Photometry	S7.1.1.13 Photometry.

APPENDIX A.—FMVSS NO. 108 REWRITE CROSS REFERENCE—Continued

Current FMVSS No. 108 or incorporated document citation	FMVSS No. 108 rewrite NPRM citation	FMVSS No. 108 rewrite final rule citation
S5.1.1.7 Motorcycle turn signal lamp	S7.1.1.1 Photometry	S7.1.1.13.1.
S5.1.1.7 Motorcycle turn signal lamp	S7.1.1.1 Photometry	S7.1.1.13.2.
S5.1.1.8 Inboard photometry	S7.4.1.1 Inboard photometry	S7.4.13.2 Inboard photometry.
S5.1.1.8 Inboard photometry	Table X footnote 1	Table X footnote 1.
S5.1.1.9 Boat trailer exemption	Table I Number and color—Clearance lamp	Table I–b Number and color—Clearance lamp.
S5.1.1.10 Multiple license plate lamps and backup lamps.	S6.1.1 Quantity	S6.1.1 Quantity.
S5.1.1.10 Multiple license plate lamps and backup lamps.	Table I Number and color	Table I–a Number and color.
S5.1.1.10 Multiple license plate lamps and backup lamps.	Table I Number and color	Table I–b Number and color.
S5.1.1.10 Multiple license plate lamps and backup lamps.	Table I Number and color	Table I–c Number and color.
S5.1.1.11 Stop lamp and turn signal lamp activation interaction.	S4 Definitions—Optically combined	S4 Definitions—Optically combined.
S5.1.1.11 Stop lamp and turn signal lamp activation interaction.	S6.1.5 Activation	S6.1.5 Activation.
S5.1.1.11 Stop lamp and turn signal lamp activation interaction.	Table I Activation—Stop lamps	Table I–a Activation—Stop lamps.
S5.1.1.11 Stop lamp and turn signal lamp activation interaction.	Table I Activation—Stop lamps	Table I–b Activation—Stop lamps.
S5.1.1.12	S7.1.1.3.1 Lamps installed on vehicles 2032 mm or more in overall width.	S7.1.1.11.4 Lamps installed on vehicles 2032 mm or more in overall width.
S5.1.1.12	S7.1.2.2.1 Lamps installed on vehicles 2032 mm or more in overall width.	S7.1.2.11.4 Lamps installed on vehicles 2032 mm or more in overall width.
S5.1.1.12	S7.3.1.1.1 Lamps installed on vehicles 2032 mm or more in overall width.	S7.3.11.4 Lamps installed on vehicles 2032 mm or more in overall width.
S5.1.1.13	Table XXI Turn signal operating unit durability test—performance requirements.	S14.9.1.3.1 Voltage drop (<2032 mm wide).
S5.1.1.13	Table XXI Turn signal operating unit durability test—performance requirements.	S14.9.1.3 Performance requirements.
S5.1.1.14 Trailer exemption—rear	Table I Number and color	Table I–b Number and color.
S5.1.1.15 Trailer exemption—front	Table I Number and color	Table I–b Number and color.
S5.1.1.16	S6.8.5.2.1 Bulbs without MSCD	S14.2.1.6.1 Bulbs without MSCD.
S5.1.1.17	S6.8.5.2 Bulbs	S14.2.1.6 Bulbs.
S5.1.1.17	S6.8.5.2 Bulbs	S14.2.2.3 Bulbs.
S5.1.1.17	S6.8.5.2 Bulbs	S14.2.4.3 Bulbs.
S5.1.1.18 Backup lamp photometry	Table XII Single backup lamp system—Individual point photometry.	Table XII Single lamp system—Individual point photometry.
S5.1.1.18 Backup lamp photometry	Table XII Two backup lamp system—Individual point photometry.	Table XII Two lamp systems Each lamp—Individual point photometry.
S5.1.1.18 Backup lamp photometry	Table XII footnote 4	Table XII footnote 4.
S5.1.1.19 Variable load turn signal flasher	Table XXI Turn signal flasher starting time test—procedure.	S14.9.3.3.2.1 Setup.
S5.1.1.19 Variable load turn signal flasher	Table XXI Turn signal flasher voltage drop test—procedure.	S14.9.3.4.2.1 Setup.
S5.1.1.19 Variable load turn signal flasher	Table XXI Turn signal flasher flash rate and percent current ''on'' time test—procedure.	S14.9.3.5.2.1 Setup.
S5.1.1.20 Flasher voltage drop	Table XXI Turn signal flasher voltage drop test—performance requirements.	S14.9.3.4.3 Performance requirements.
S5.1.1.20 Flasher voltage drop	Table XXI Vehicular hazard warning signal flasher voltage drop test—performance requirements.	S14.9.3.8.3 Performance requirements.
S5.1.1.21 Motor driven cycle turn signal exemption.	Table I Number and color	Table I–c Number and color.
S5.1.1.22 Motor driven cycle stop lamp exemptions.	S6.4.1 Effective projected luminous lens area requirements.	S6.4.1 Effective projected luminous lens area requirements.
S5.1.1.22 Motor driven cycle stop lamp exemptions.	Table IV Stop lamp—Effective projected luminous lens area.	Table IV–a Stop lamp—Effective projected luminous lens area.
S5.1.1.22 Motor driven cycle stop lamp exemptions.	Table IV footnote 1	Table IV footnote 1.
S5.1.1.22 Motor driven cycle stop lamp exemptions.	Table IX Motor driven cycle stop lamp zone photometry.	Table XIII–b Motor driven cycle stop lamp—Group photometry.
S5.1.1.22 Motor driven cycle stop lamp exemptions.	S7.3.1 Photometry	S7.3.13.2 Motor driven cycle alternative.
S5.1.1.22 Motor driven cycle stop lamp exemptions.	Table IX footnote 5	Table XIII–b footnote 3.
S5.1.1.25 Motor cycle turn signal lamp EPLLA	S6.4.1 Effective projected luminous lens area requirements.	S6.4.1 Effective projected luminous lens area requirements.

APPENDIX A.—FMVSS NO. 108 REWRITE CROSS REFERENCE—Continued

Current FMVSS No. 108 or incorporated document citation	FMVSS No. 108 rewrite NPRM citation	FMVSS No. 108 rewrite final rule citation
S5.1.1.25 Motor cycle turn signal lamp EPLLA	Table IV Front turn signal lamp—Effective projected luminous lens area.	Table IV–a Front turn signal lamp—Effective projected luminous lens area.
S5.1.1.25 Motor cycle turn signal lamp EPLLA	Table IV Rear turn signal lamp—Effective projected luminous lens area.	Table IV–a Rear turn signal lamp—Effective projected luminous lens area.
S5.1.1.26(a)	S6.4.1 Effective projected luminous lens area requirements.	S6.4.1 Effective projected luminous lens area requirements.
S5.1.1.26(a)	Table IV Rear turn signal lamp—Effective projected luminous lens area.	Table IV–a Rear turn signal lamp—Effective projected luminous lens area.
S5.1.1.26(a)	Table IV Stop lamp—Effective projected luminous lens area.	Table IV–a Stop lamp—Effective projected luminous lens area.
S5.1.1.26(b)	S6.4.1 Effective projected luminous lens area requirements.	S6.4.1 Effective projected luminous lens area requirements.
S5.1.1.26(b)	Table IV Rear turn signal lamp—Effective projected luminous lens area.	Table IV–a Rear turn signal lamp—Effective projected luminous lens area.
S5.1.1.26(b)	Table IV Stop lamp—Effective projected luminous lens area.	Table IV–a Stop lamp—Effective projected luminous lens area.
S5.1.1.27(a)	S6.1.1.2 High mounted stop lamp	S6.1.1.2 High mounted stop lamp.
S5.1.1.27(a)	Table I Lighting device	Table I–a Lighting device.
S5.1.1.27(a)(1)	S6.4.1 Effective projected luminous lens area requirements.	S6.4.1 Effective projected luminous lens area requirements.
S5.1.1.27(a)(1)	Table IV High mounted stop lamp—Effective projected luminous lens area.	Table IV–b High mounted stop lamp—Effective projected luminous lens area.
S5.1.1.27(a)(2)	Table V HMSL—Visibility	Table V–a HMSL—Visibility.
S5.1.1.27(a)(3)	S7.9.3 Photometry	S7.9.13 Photometry.
S5.1.1.27(b)(3)	S7.9.3 Photometry	S7.9.13 Photometry.
S5.1.1.27(a)(4)	S7.9.4 Physical tests	S7.9.14 Physical tests.
S5.1.1.27(a)(4)	S7.9.4 Physical tests	S7.9.14.1 External mount.
S5.1.1.27(a)(4)	S7.9.4 Physical tests	S7.9.14.2 Internal mount.
S5.1.1.27(a)(5)	S7.9.1 High mounted stop lamp design	S6.1.4.1.3 Accessibility.
S5.1.1.27(b)	S6.1.1.2 High mounted stop lamp	S6.1.1.2 High mounted stop lamp.
S5.1.1.27(b)	Table I Lighting device	Table I–a Lighting device.
S5.1.1.27(b)(1)	S6.1.1.2 High mounted stop lamp	S6.1.1.2 High mounted stop lamp.
S5.1.1.27(b)(1)	S6.4.1 Effective projected luminous lens area requirements.	S6.4.1 Effective projected luminous lens area requirements.
S5.1.1.27(b)(1)	Table IV High mounted stop lamp—Effective projected luminous lens area.	Table IV–b High mounted stop lamp—Effective projected luminous lens area.
S5.1.1.27(b)(2)	Table V HMSL—Visibility	Table V–a HMSL—Visibility.
S5.1.1.27(b)(3)	Table XV footnote 3	Table XV footnote 3.
S5.1.1.27(b)(4)	S7.9.1 High mounted stop lamp design	S6.1.4.1.3 Accessibility.
S5.1.1.29 Conspicuity system replace reflex on trailers.	S6.1.1.1.1 Conspicuity and reflex	Table I–b Reflex reflectors.
S5.1.2 Plastic optical materials	S6.8.4 Plastic optical materials	S14.1.2 Plastic optical materials.
S5.1.2 Plastic optical materials	S7.1.3 Physical tests	S7.1.1.14 Physical tests.
S5.1.2 Plastic optical materials	S7.1.3 Physical tests	S7.1.2.14 Physical tests.
S5.1.2 Plastic optical materials	S7.2.2 Physical tests	S7.2.14 Physical tests.
S5.1.2 Plastic optical materials	S7.3.2 Physical tests	S7.3.14 Physical tests.
S5.1.2 Plastic optical materials	S7.4.2 Physical tests	S7.4.14 Physical tests.
S5.1.2 Plastic optical materials	S7.5.2 Physical tests	S7.5.14 Physical tests.
S5.1.2 Plastic optical materials	S7.6.3 Physical tests	S7.6.14 Physical tests.
S5.1.2 Plastic optical materials	S7.7.3 Physical tests	S7.7.14 Physical tests.
S5.1.2 Plastic optical materials	S7.8.2 Physical tests	S7.8.14 Physical tests.
S5.1.2 Plastic optical materials	S7.9.4 Physical tests	S7.9.14 Physical tests.
S5.1.2 Plastic optical materials	S7.9.4 Physical tests	S7.9.14.1 External mount.
S5.1.2 Plastic optical materials	S7.9.4 Physical tests	S7.9.14.2 Internal mount.
S5.1.2 Plastic optical materials	S7.10.2 Physical tests	S8.1.12 Physical tests.
S5.1.2 Plastic optical materials	S7.11.3 Physical tests	S7.10.14 Physical tests.
S5.1.2 Plastic optical materials	S7.13.2 Physical test requirements	S7.11.14 Physical tests.
S5.1.2 Plastic optical materials	S9.4 Physical tests	S10.13.4.3 Material test.
S5.1.2 Plastic optical materials	S10.7 Physical tests	S10.14.7.8 Material test.
S5.1.2 Plastic optical materials	S11.7 Physical tests	S10.15.7.7 Material test.
S5.1.2(a)	Table XXII Plastic optical material tests—performance requirements.	S14.4.2.2.4 Performance requirements.
S5.1.2(b)	Table XXII Plastic optical material tests—performance requirements.	S14.4.2.2.4.1(a) Except reflex.
S5.1.2(b)	Table XXII Plastic optical material tests—performance requirements.	S14.4.2.2.4.1 Haze.
S5.1.2(c)	Table XXII Plastic optical material tests—performance requirements.	S14.4.2.2.4.1 Haze.
S5.1.2(c)	Table XXII Plastic optical material tests—performance requirements.	S14.4.2.2.4.1(b) Reflex.

APPENDIX A.—FMVSS NO. 108 REWRITE CROSS REFERENCE—Continued

Current FMVSS No. 108 or incorporated document citation	FMVSS No. 108 rewrite NPRM citation	FMVSS No. 108 rewrite final rule citation
S5.1.2(c)	Table XXII Plastic optical material tests—performance requirements.	S14.4.2.2.4.3 Physical changes.
S5.1.2(d)	Table XXII Plastic optical material tests—samples.	S14.4.2.1.3 Thickness.
S5.1.2(e)	Table XXII Plastic optical material tests—performance requirements.	S14.4.2.3.2 Performance requirements.
S5.1.2(e)	Table XXII Plastic optical material tests	S14.4.2.3 Heat test.
S5.1.2(f)	Table XXII Plastic optical material tests	S14.4.2.3 Heat test.
S5.1.2(f)	Table XXII Plastic optical material tests—procedure.	S14.4.2.3.1 Procedure.
S5.1.2(g)	Table XXII Plastic optical material tests	S14.4.2.2.1 Location and duration.
S5.1.3 Impairment	S6.2.1 Impairment due to additional lamps or reflective devices.	S6.2.1 Impairment due to additional lamps or reflective devices.
S5.1.4 School bus signal lamps	Table I Additional Lamps Required on All School Buses except Multifunction School Activity Buses.	Table I–a Additional Lamps Required on All School Buses except Multifunction School Activity Buses.
S5.1.4(a)	Table I Number and color—School bus signal lamps.	Table I–a Number and color—School bus signal lamps.
S5.1.4(b)	Table XVII Amber lamp photometry	Table XVII Amber lamp photometry.
S5.1.4(b)(i)	Table I Number and color—School bus signal lamps.	Table I–a Number and color—School bus signal lamps.
S5.1.4(b)(ii)	Table I Activation—School bus signal lamps	Table I–a Activation—School bus signal lamps.
S5.1.4(b)	S7.13.1 Photometry	S7.11.13 Photometry.
S5.1.5 Color	S6.1.2 Color	S6.1.2 Color.
S5.1.5 Color	S7.1.3 Physical tests	S7.1.1.14 Physical tests.
S5.1.5 Color	S7.1.3 Physical tests	S7.1.2.14 Physical tests.
S5.1.5 Color	S7.2.2 Physical tests	S7.2.14 Physical tests.
S5.1.5 Color	S7.3.2 Physical tests	S7.3.14 Physical tests.
S5.1.5 Color	S7.4.2 Physical tests	S7.4.14 Physical tests.
S5.1.5 Color	S7.5.2 Physical tests	S7.5.14 Physical tests.
S5.1.5 Color	S7.6.3 Physical tests	S7.6.14 Physical tests.
S5.1.5 Color	S7.7.3 Physical tests	S7.7.14 Physical tests.
S5.1.5 Color	S7.8.2 Physical tests	S7.8.14 Physical tests.
S5.1.5 Color	S7.10.2 Physical tests	S8.1.12 Physical tests.
S5.1.5 Color	S7.11.3 Physical tests	S7.10.14 Physical tests.
S5.1.5 Color	S7.13.2 Physical test requirements	S7.11.14 Physical tests.
S5.1.5 Color	S7.9.4 Physical tests	S7.9.14 Physical tests.
S5.1.5 Color	S7.9.4 Physical tests	S7.9.14.1 External mount.
S5.1.5 Color	S7.9.4 Physical tests	S7.9.14.2 Internal mount.
S5.1.5 Color	S9.4 Physical tests	S10.13.4.3 Color test.
S5.1.5 Color	S10.7 Physical tests	S10.14.7.8 Color test.
S5.1.5 Color	S11.7 Physical tests	S10.15.7.7 Color test.
S5.1.5 Color	Table XXII Color test—performance requirements.	S14.4.1.3.2 Performance requirements.
S5.1.5 Color	Table XXII Color test—performance requirements.	S14.4.1.4.2 Performance requirements.
S5.2.1	S5.1 SAE Publications	S5.1 SAE Publications.
S5.2.2	S17.3 Sealed beam headlamp markings	S6.5.3.3 Sealed beam headlamp markings.
S5.3 Location	S6.1.3 Mounting location and height	S6.1.3.1.
S5.3 Location	S6.1.3 Mounting location and height	S6.1.3.2.
S5.3.1.2 Truck tractor rear reflex	Table I Mounting location—Reflex reflectors	Table I–a Mounting location—Reflex reflectors.
S5.3.1.3 Trailer front reflex and side marker	Table I Mounting location—Reflex reflectors	Table I–b Mounting location—Reflex reflectors.
S5.3.1.3 Trailer front reflex and side marker	Table I Mounting location—Side marker lamps	Table I–b Mounting location—Side marker lamps.
S5.3.1.4 Rear clearance lamp mounting	Table I Mounting height—Clearance lamps	Table I–a Mounting height—Clearance lamps.
S5.3.1.4 Rear clearance lamp mounting	Table I Mounting height—Clearance lamps	Table I–b Mounting height—Clearance lamps.
S5.3.1.6 Truck tractor clearance lamps	Table I Mounting location—Clearance lamps	Table I–a Mounting location—Clearance lamps.
S5.3.1.7 Turn signal spacing	Table VI Front turn signal lamp—2.5 × base zone photometry.	Table VI–a Front turn signal lamp—2.5 × base group photometry.
S5.3.1.7 Turn signal spacing	Table VI Front turn signal lamp—2.5 × base individual point photometry.	Table VI–a Front turn signal lamp—2.5 × base individual point photometry.
S5.3.1.7 Turn signal spacing	S7.1.1.2.3 Spacing based photometric multipliers.	S7.1.1.10.4 Spacing based photometric multipliers.
S5.3.1.8(a)(1)	Table I Mounting location—High mounted stop lamp.	Table I–a Mounting location—High-mounted stop lamp.
S5.3.1.8(a)(2)	S6.1.3.2.1 High mounted stop lamp mounting	S6.1.4.1.1 High-mounted stop lamp mounting.
S5.3.1.8(a)(3)	S7.9.2 Interior mounting	S6.1.4.1.2.

APPENDIX A.—FMVSS NO. 108 REWRITE CROSS REFERENCE—Continued

Current FMVSS No. 108 or incorporated document citation	FMVSS No. 108 rewrite NPRM citation	FMVSS No. 108 rewrite final rule citation
S5.3.1.8(a)(3)	S6.1.3.2.2. High mounted stop lamp reflections.	S6.1.4.1.2. High-mounted stop lamp reflections.
S5.3.1.8(b)	S6.1.1.2 High mounted stop lamp	S6.1.1.2.1 High-mounted stop lamp.
S5.3.2(a)	S6.2.1 Impairment due to additional lamps or reflective devices.	S6.2.1 Impairment due to additional lamps or reflective devices.
S5.3.2(b)	S6.4.3 Visibility options	S6.4.3 Visibility requirement options.
S5.3.2(b)(1)	S6.4.3(a) Lens area option	S6.4.3(a) Lens area option.
S5.3.2(b)(1)	Table V Lens area visibility	Table V–c Lens area visibility.
S5.3.2(b)(2)	S6.4.3(b) Luminous intensity option	S6.4.3(b) Luminous intensity option.
S5.3.2(b)(2)	Table V Luminous intensity visibility	Table V–d Luminous intensity visibility.
S5.3.2(c)	S6.4.2 Visibility	S6.4.2 Visibility.
S5.3.2(c)	Table V High mounted stop lamp visibility	Table V–a High mounted stop lamp visibility.
S5.3.2(d)	S6.4.2 Visibility	S6.4.2 Visibility.
S5.3.2(d)	Table V High mounted stop lamp visibility	Table V–a High mounted stop lamp visibility.
S5.3.2(e)	S6.4.2 Visibility	S6.4.2 Visibility.
S5.3.2(e)	Table V Backup lamp visibility	Table V–a Backup lamp visibility.
S5.3.2.1	Table I Mounting location—Clearance lamps	Table I–a Mounting location—Clearance lamps.
S5.3.2.1	Table I Mounting location—Clearance lamps	Table I–b Mounting location—Clearance lamps.
S5.3.2.1	Table XI footnote 4	Table XI footnote 4.
S5.3.2.2	S6.2.2 Lamp or reflective device obstructed	S6.2.2 Lamp or reflective device obstructed.
S5.3.2.3	Table V footnote 2	Table V footnote 2.
S5.3.2.3	Table VI footnote 3	Table VI footnote 3.
S5.3.2.3	Table VII footnote 3	Table VII footnote 3.
S5.3.2.3	Table VIII footnote 3	Table VIII footnote 3.
S5.3.2.3	Table IX footnote 4	Table IX footnote 4.
S5.3.2.3	Table X footnote 3	Table X footnote 3.
S5.3.2.3	Table XI footnote 1	Table XI footnote 1.
S5.3.2.3	Standard note—new table	Table XIII–a footnote 4.
S5.3.2.3	Table XIV footnote 3	Table XIV footnote 3.
S5.3.2.3	Table XVI footnote 1	Table XVI–a footnote 1.
S5.3.2.3	Table XVII footnote 1	Table XVII footnote 1.
S5.3.2.4	S6.4.4 SAE visibility alternative to S6.4.3	S6.4.4 Legacy visibility option.
S5.4 Equipment combinations	S6.3 Equipment combinations	S6.3 Equipment combinations.
S5.4(a)	S6.3.1 High mounted stop lamp and cargo lamp.	S6.3.1 High-mounted stop lamp and cargo lamp.
S5.4(b)	S4 Definitions—Optically combined	S4 Definitions—Optically combined.
S5.4(b)	S6.3.2 Optically combined HSML and cargo lamp prohibition.	S6.3.2 Optically combined HSML and cargo lamp prohibition.
S5.4(c)	S4 Definitions—Optically combined	S4 Definitions—Optically combined.
S5.4(c)	S6.3.3. Clearance lamp and taillamp	S6.3.3. Clearance lamp and taillamp.
S5.5.1 Headlamp beam switching	S7.14.4 Headlamp beam switching device	S9.4 Headlamp beam switching device.
S5.5.1 Headlamp beam switching	S7.14.4.1 Semi-automatic headlamp beam switching device.	S9.4.1 Semi-automatic headlamp beam switching device.
S5.5.2 Upper beam indicator	S7.14.5 Upper beam headlamp indicator	S9.5 Upper beam headlamp indicator.
S5.5.2 Upper beam indicator	S7.14.5.1 Indicator size and location	S9.5.1 Indicator size, location, and color.
S5.5.3	S6.1.5 Activation	S6.1.5 Activation.
S5.5.3	Table I Activation—Taillamps	Table I–a Activation—Taillamps.
S5.5.3	Table I Activation—Taillamps	Table I–c Activation—Taillamps.
S5.5.4	Table I Activation—High mounted stop lamps	Table I–a Activation—High mounted stop lamps.
S5.5.4	Table I Activation—Stop lamps	Table I–a Activation—Stop lamps.
S5.5.4	Table I Activation—Stop lamps	Table I–b Activation—Stop lamps.
S5.5.4	Table I Activation—Stop lamps	Table I–c Activation—Stop lamps.
S5.5.5	S6.1.1.4 Hazard warning lamps	S6.1.5.1 Hazard warning signal.
S5.5.5	S7.14.6.1 Operating unit switch	S9.6.2 Operation.
S5.5.6	S7.14.3.2 Turn signal lamp failure	S9.3.6 Turn signal lamp failure.
S5.5.6	S7.14.3 Turn signal pilot indicator	S9.3 Turn signal pilot indicator.
S5.5.6	S7.14.3 Turn signal pilot indicator	S9.3.1 TS lamps not visible.
S5.5.6	S7.14.3 Turn signal pilot indicator	S9.3.2 Indicator light(s).
S5.5.6	S7.14.3 Turn signal pilot indicator	S9.3.3 Function.
S5.5.7	S6.1.5 Activation	S6.1.5 Activation.
S5.5.7(a)	Table I Activation—Taillamps	Table I–a Activation—Taillamps.
S5.5.7(a)	Table I Activation—License plate lamps	Table I–a Activation—License plate lamps.
S5.5.7(a)	Table I Activation—Parking lamps	Table I–a Activation—Parking lamps.
S5.5.7(a)	Table I Activation—Side marker lamps	Table I–a Activation—Side marker lamps.
S5.5.7(a)	Table I Activation—Taillamps	Table I–c Activation—Taillamps.
S5.5.7(a)	Table I Activation—License plate lamps	Table I–c Activation—License plate lamps.
S5.5.7(b)	Table I Activation—Taillamps	Table I–a Activation—Taillamps.
S5.5.7(b)	Table I Activation—License plate lamps	Table I–a Activation—License plate lamps.

APPENDIX A.—FMVSS NO. 108 REWRITE CROSS REFERENCE—Continued

Current FMVSS No. 108 or incorporated document citation	FMVSS No. 108 rewrite NPRM citation	FMVSS No. 108 rewrite final rule citation
S5.5.7(b)	Table I Activation—Parking lamps	Table I–a Activation—Parking lamps.
S5.5.7(b)	Table I Activation—Side marker lamps	Table I–a Activation—Side marker lamps.
S5.5.7(b)	Table I Activation—Taillamps	Table I–c Activation—Taillamps.
S5.5.7(b)	Table I Activation—License plate lamps	Table I–c Activation—License plate lamps.
S5.5.8	S8.2 Simultaneous beam activation	S6.1.5.2.1.
S5.5.8	S8.2 Simultaneous beam activation	S6.1.5.2.2.
S5.5.8	Table I Activation—Headlamp	Table I–a Activation—Headlamp.
S5.5.8	Table II footnote 1	Table II footnote 1.
S5.5.8	Table II footnote 3	Table II footnote 3.
S5.5.8	Table II footnote 4	Table II footnote 4.
S5.5.8	Table II footnote 5	Table II footnote 5.
S5.5.9	Table I Activation—Headlamp	Table I–a Activation—Headlamp.
S5.5.9	Table I Activation—Headlamp	Table I–c Activation—Headlamp.
S5.5.9	Table I Activation—Motorcycle headlamps	Table I–c Activation—Motorcycle headlamps.
S5.5.10(a)	S6.1.5 Activation	S6.1.5 Activation.
S5.5.10(a)	Table I Activation—School bus signal lamps	Table I–a Activation—School bus signal lamps.
S5.5.10(a)	Table I Activation—Turn signals	Table I–a Activation—Turn signals.
S5.5.10(a)	Table I Activation—Turn signals	Table I–b Activation—Turn signals.
S5.5.10(a)	Table I Activation—Turn signals	Table I–c Activation—Turn signals.
S5.5.10(b)	S6.1.5 Activation	S6.1.5 Activation.
S5.5.10(b)	Table I Activation—Headlamp	Table I–a Activation—Headlamp.
S5.5.10(b)	Table I Activation—Side marker lamps	Table I–a Activation—Side marker lamps.
S5.5.10(b)	Table I Activation—Side marker lamps	Table I–b Activation—Side marker lamps.
S5.5.10(b)	Table I Activation—Motorcycle headlamps	Table I–c Activation—Motorcycle headlamps.
S5.5.10(c)	Table I Activation—Motorcycle headlamps	Table I–c Activation—Motorcycle headlamps.
S5.5.10(d)	S6.1.5 Activation	S6.1.5 Activation.
S5.5.10(d)	Table I Activation—Taillamps	Table I–a Activation—Taillamps.
S5.5.10(d)	Table I Activation—Backup lamps	Table I–a Activation—Backup lamps.
S5.5.10(d)	Table I Activation—Clearance lamps	Table I–a Activation—Clearance lamps.
S5.5.10(d)	Table I Activation—DRL	Table I–a Activation—DRL.
S5.5.10(d)	Table I Activation—Headlamp	Table I–a Activation—Headlamp.
S5.5.10(d)	Table I Activation—High mounted stop lamps	Table I–a Activation—High mounted stop lamps.
S5.5.10(d)	Table I Activation—Identification lamps	Table I–a Activation—Identification lamps.
S5.5.10(d)	Table I Activation—License plate lamps	Table I–a Activation—License plate lamps.
S5.5.10(d)	Table I Activation—Parking lamps	Table I–a Activation—Parking lamps.
S5.5.10(d)	Table I Activation—Side marker lamps	Table I–a Activation—Side marker lamps.
S5.5.10(d)	Table I Activation—Taillamps	Table I–b Activation—Taillamps.
S5.5.10(d)	Table I Activation—Clearance lamps	Table I–b Activation—Clearance lamps.
S5.5.10(d)	Table I Activation—Side marker lamps	Table I–b Activation—Side marker lamps.
S5.5.10(d)	Table I Activation—Stop lamps	Table I–b Activation—Stop lamps.
S5.5.10(d)	Table I Activation—Taillamps	Table I–c Activation—Taillamps.
S5.5.10(d)	Table I Activation—Headlamp	Table I–c Activation—Headlamp.
S5.5.10(d)	Table I Activation—License plate lamps	Table I–c Activation—License plate lamps.
S5.5.10(d)	Table I Activation—Stop lamps	Table I–c Activation—Stop lamps.
S5.5.11(a) Daytime running lamps (DRL)	S6.2.4 Daytime running lamps (DRL)	S6.1.1.4 Daytime running lamps (DRL).
S5.5.11(a) Daytime running lamps (DRL)	Table I Activation—DRL	Table I–a Activation—DRL.
S5.5.11(a) Daytime running lamps (DRL)	Table I Lighting device	Table I–a Lighting device.
S5.5.11(a)(1)	S7.11.1 Photometry	S7.10.13 Photometry.
S5.5.11(a)(1)(i)	S7.11.1(a)	S7.10.13(a).
S5.5.11(a)(1)(ii)	S7.11.1(b)	S7.10.13(b).
S5.5.11(a)(2)	S6.5.2 DRL marking	S6.5.2 DRL marking.
S5.5.11(a)(3)	S7.11.3 Physical tests	S7.10.14 Physical tests.
S5.5.11(a)(3)	Table I Lighting device	Table I–a Lighting device.
S5.5.11(a)(3)	Table I Number and color	Table I–a Number and color.
S5.5.11(a)(4)	S7.11.2 Spacing to turn signal lamps	S7.10.10 Spacing to other lamps.
S5.5.11(a)(4)(i)	S7.11.2.2(a) Not optically combined with turn signal lamp.	S7.10.10.1(a).
S5.5.11(a)(4)(iii)	S7.11.2.2(b) Not optically combined with turn signal lamp.	S7.10.10.1(b).
S5.5.11(a)(4)(iv)	S7.11.2.2(c) Not optically combined with turn signal lamp.	S7.10.10.1(c).
S5.5.11(a)(5)	Table I Activation—DRL	Table I–a Activation—DRL.
S5.5.11(b)	Table I Lighting device	Table I–a Lighting device.
S5.5.11(b)	Table I Mounting height	Table I–a Mounting height.
S5.7 Conspicuity systems	S6.1.1.1 Conspicuity systems	S6.1.1.1 Conspicuity systems.
S5.7.1 Retroreflective sheeting	S6.1.1.1 Conspicuity systems	S6.1.1.1 Conspicuity systems.
S5.7.1 Retroreflective sheeting	S7.12.1 Retroreflective sheeting	S8.2.1 Retroreflective sheeting.
S5.7.1.1 Construction	S7.12.1 Retroreflective sheeting	S8.2.1.1 Construction.
S5.7.1.2 Performance requirements	S6.8.5 Photometric tests	S14.2 Photometric test procedures.

APPENDIX A.—FMVSS NO. 108 REWRITE CROSS REFERENCE—Continued

Current FMVSS No. 108 or incorporated document citation	FMVSS No. 108 rewrite NPRM citation	FMVSS No. 108 rewrite final rule citation
S5.7.1.2 Performance requirements	S6.8.5.4.1 Reflex reflector and retroreflective sheeting photometry measurements.	S14.2.3.8.2 Retroreflective sheeting.
S5.7.1.2 Performance requirements	S7.12.1.2 Photometry	S8.2.1.7 Photometry.
S5.7.1.2 Performance requirements	Table XVI Red C2 sheeting photometry	Table XVI–c Red C2 sheeting photometry.
S5.7.1.2 Performance requirements	Table XVI Red C3 sheeting photometry	Table XVI–c Red C3 sheeting photometry.
S5.7.1.2 Performance requirements	Table XVI Red C4 sheeting photometry	Table XVI–c Red C4 sheeting photometry.
S5.7.1.2 Performance requirements	Table XVI White C2 sheeting photometry	Table XVI–c White C2 sheeting photometry.
S5.7.1.2 Performance requirements	Table XVI White C3 sheeting photometry	Table XVI–c White C3 sheeting photometry.
S5.7.1.2 Performance requirements	Table XVI White C4 sheeting photometry	Table XVI–c White C4 sheeting photometry.
S5.7.1.2 Performance requirements	S7.12.1 Retroreflective sheeting	S8.2.1.2 Performance requirements.
S5.7.1.3 Sheeting pattern, dimensions, and relative coefficients of retroreflection.	Table III Application pattern—Alternating—Retroreflective sheeting.	S8.2.1.4.1 Alternating red and white materials.
S5.7.1.3(b)	Table III Application pattern—Alternating—Retroreflective sheeting.	S8.2.1.4.1.1 Segments.
S5.7.1.3(c)	Table III Application pattern—Alternating—Retroreflective sheeting.	S8.2.1.4.1.2 Proportion.
S5.7.1.3(d)	S7.12.1 Retroreflective sheeting	S8.2.1.2 Performance requirements.
S5.7.1.4(a)	Table III Application location—Retroreflective sheeting.	S8.2.1.5 Application location.
S5.7.1.4(b)	Table III Application spacing—Retroreflective sheeting.	S8.2.1.6 Application spacing.
S5.7.1.4(c)	Table III Application spacing—Retroreflective sheeting.	S8.2.1.6 Application spacing.
S5.7.1.4.1 Rear of trailers	Table III Trailer rear	S8.2.3.1 Trailer rear.
S5.7.1.4.1 Rear of trailers	Table III Trailer rear—Element 2—White	S8.2.3.1.2 Element 2—white & Exceptions.
S5.7.1.4.1 Rear of trailers	Table III Trailer rear—Element 3—Alternating	S8.2.3.1.3 Element 3—alternating red and white materials & Exceptions.
S5.7.1.4.1(a)	Table III Trailer rear—Element 1—Alternating	S8.2.3.1.1 Element 1—alternating red and white materials.
S5.7.1.4.1(b)	Table III Trailer rear—Element 2—White—requirement.	S8.2.3.1.2.1 Upper corners.
S5.7.1.4.1(b)	Table III Trailer rear—Element 2—White—requirement.	S8.2.3.1.2.2 Non rectangular body.
S5.7.1.4.1(c)	Table III Trailer rear—Element 3—Alternating—requirement.	S8.2.3.1.3.2 Underride device.
S5.7.1.4.2 Side of trailers	Table III Trailer side—Alternating	S8.2.3.2 Trailer side—alternating red and white materials.
S5.7.1.4.2(a)	Table III Trailer side—Alternating—requirement.	S8.2.3.2.1 Horizontal strip.
S5.7.1.4.2(a)	Table III Trailer side—Alternating—requirement.	S8.2.3.2.2 Non-continuous.
S5.7.1.4.2(b)	Table III Trailer side—Alternating—requirement.	S8.2.3.2.3 Obstructions.
S5.7.1.4.3 Rear of truck tractors	Table III Truck tractor	S8.2.4 Conspicuity system installation on truck tractors.
S5.7.1.4.3 Rear of truck tractors	Table III Truck tractor—Element 1—Alternating.	S8.2.4.1 Element 1—alternating red and white materials.
S5.7.1.4.3(a)	Table III Truck tractor—Element 1—Alternating—requirement.	S8.2.4.1.1 Lower horizontal.
S5.7.1.4.3(a)	Table III Truck tractor—Element 1—Alternating—requirement.	S8.2.4.1.2 Mudflap mounting.
S5.7.1.4.3(a)	Table III Truck tractor—Element 1—Alternating—requirement.	S8.2.4.1.3 Mounting alternatives.
S5.7.1.4.3(a)	Table III Truck tractor—Element 1—Alternating—requirement.	S8.2.4.1.4 Obstruction.
S5.7.1.4.3(b)	Table III Truck tractor—Element 2—White	S8.2.4.2 Element 2—white.
S5.7.1.4.3(b)	Table III Truck tractor—Element 2—White—requirement.	S8.2.4.2.1 Obstruction.
S5.7.1.4.3(b)	Table III Truck tractor—Element 2—White—requirement.	S8.2.4.2.2 Symmetrical relocation.
S5.7.1.4.3(b)	Table III Truck tractor—Element 2—White—requirement.	S8.2.4.2.3 Window mounting.
S5.7.1.5 Certification	S6.5.1.1 DOT marking—conspicuity sheeting	S6.5.1.1 DOT marking—conspicuity sheeting.
S5.7.1.5 Certification	S7.12.1.1 Certification marking	S8.2.1.3 Certification marking.
S5.7.2 Reflex reflectors	S7.12.2 Conspicuity reflex reflectors	S8.2.2 Conspicuity reflex reflectors.
S5.7.2 Reflex reflectors	S6.8.5.4.1 Reflex reflector and retroreflective sheeting photometry measurements.	S14.2.3.8.1 Reflex reflectors.
S5.7.2.1	S7.12.2.2 Photometry	S8.2.2.3 Photometry.
S5.7.2.1(a)	S6.8.5 Photometric tests	S14.2 Photometric test procedures.
S5.7.2.1(a)	S7.12.2.2 Photometry	S8.2.2.3.1 Red reflectors.

APPENDIX A.—FMVSS NO. 108 REWRITE CROSS REFERENCE—Continued

Current FMVSS No. 108 or incorporated document citation	FMVSS No. 108 rewrite NPRM citation	FMVSS No. 108 rewrite final rule citation
S5.7.2.1(a)	S7.12.2.2 Photometry	S8.2.2.3.2 White reflectors—horizontal orientation.
S5.7.2.1(a)	S7.12.2.2 Photometry	S8.2.2.3.3 White reflectors—vertical orientation.
S5.7.2.1(b)	S7.12.2.2 Photometry	S8.2.2.3.1 Red reflectors.
S5.7.2.1(b)	Table XVI Red conspicuity reflex reflector photometry.	Table XVI–b Red conspicuity reflex reflector photometry.
S5.7.2.1(c)	S7.12.2.2 Photometry	S8.2.2.3.2 White reflectors—horizontal orientation.
S5.7.2.1(c)	Table XVI White horizontal conspicuity reflex reflector photometry.	Table XVI–b White horizontal conspicuity reflex reflector photometry.
S5.7.2.1(d)	S7.12.2.2 Photometry	S8.2.2.3.3 White reflectors—vertical orientation.
S5.7.2.1(d)	Table XVI White vertical conspicuity reflex reflector photometry.	Table XVI–b White vertical conspicuity reflex reflector photometry.
S5.7.2.2	Table III Application pattern	S8.2.2.2 Application pattern.
S5.7.2.2(a)	Table III Application pattern—Alternating—Conspicuity reflex reflectors.	S8.2.2.2.1 Alternating red and white materials.
S5.7.2.2(b)	Table III Application pattern—White—Conspicuity reflex reflectors.	S8.2.2.2.2 White material.
S5.7.2.3 Certification	S7.12.2.1 Certification marking	S8.2.2.1 Certification marking.
S5.7.3 Combination of sheeting and reflectors	S7.12 Conspicuity systems	S8.2 Conspicuity systems.
S5.8 Replacement equipment	S6.7 Replacement equipment	S6.7 Replacement equipment.
S5.8.1	S6.7.1 General requirements	S6.7.1 General requirements.
S5.8.2	S17.3 Sealed beam headlamp markings	S6.5.3.3 Sealed beam headlamp markings.
S5.8.3	S6.7 Replacement equipment	S6.7 Replacement equipment.
S5.8.4	S6.7 Replacement equipment	S6.7 Replacement equipment.
S5.8.5	S6.7 Replacement equipment	S6.7 Replacement equipment.
S5.8.6	S6.7 Replacement equipment	S6.7 Replacement equipment.
S5.8.7	S6.7 Replacement equipment	S6.7 Replacement equipment.
S5.8.8	S6.7 Replacement equipment	S6.7 Replacement equipment.
S5.8.9	S6.7 Replacement equipment	S6.7 Replacement equipment.
S5.8.10	S6.5.1.2 DOT marking—except headlamps	S6.5.1.2 DOT marking—except headlamps.
S5.8.11	S18 Replaceable headlamp lens requirements	S13 Replaceable headlamp lens requirements.
S6 Subreferenced SAE Standards and Recommended Practices.	S5 References to SAE publications	S5 References to SAE publications.
S6.1	S5.1 Recommended=mandatory	S5.1 Recommended=mandatory.
S6.2	S7.1.3 Physical tests	S7.1.1.14 Physical tests.
S6.2	S7.1.3 Physical tests	S7.1.2.14 Physical tests.
S6.2	S7.2.2 Physical tests	S7.2.14 Physical tests.
S6.2	S7.3.2 Physical tests	S7.3.14 Physical tests.
S6.2	S7.4.2 Physical tests	S7.4.14 Physical tests.
S6.2	S7.5.2 Physical tests	S7.5.14 Physical tests.
S6.2	S7.6.3 Physical tests	S7.6.14 Physical tests.
S6.2	S7.7.3 Physical tests	S7.7.14 Physical tests.
S6.2	S7.8.2 Physical tests	S7.8.14 Physical tests.
S6.2	S7.9.4 Physical tests	S7.9.14 Physical tests.
S6.2	S7.9.4 Physical tests	S7.9.14.1 External mount.
S6.2	S7.9.4 Physical tests	S7.9.14.2 Internal mount.
S6.2	S7.10.2 Physical tests	S8.1.12 Physical tests.
S6.2	S7.11.3 Physical tests	S7.10.14 Physical tests.
S6.2	S7.13.2 Physical test requirements	S7.11.14 Physical tests.
S6.3	S4 Definitions—Effective projected luminous lens area.	S4 Definitions—Effective projected luminous lens area.
S7 Headlighting requirements	S8 Headlighting system requirements	S10 Headlighting system requirements.
S7.1	S8.1 Headlighting systems	S10.1.1 Vehicles ex motorcycles & trailers.
S7.2(a)	S6.5.1 DOT marking	S6.5.1 DOT marking.
S7.2(b)	S17.1 Trademark	S6.5.3.1 Trademark.
S7.2(c)	S17.2 Voltage and trade number	S6.5.3.2 Voltage and trade number.
S7.2(d)	S6.8.5.6.2 Aiming	S14.2.5.5 Aiming.
S7.2(d)	S6.8.5.6.5 Location of test points	S14.2.5.2 Glare area.
S7.2(e)	S6.5.1 DOT marking	S6.5.1 DOT marking.
S7.2(e)	S18 Replaceable headlamp lens requirements	S13 Replaceable headlamp lens requirements.
S7.3 Sealed beam headlighting system	S9 Sealed beam headlamp requirements	S10.13 Sealed beam headlighting system.
S7.3	S8.1.1 Headlighting system type	Redundant—eliminated.
S7.3	S8.1.2 Headlamp category	Redundant—eliminated.
S7.3.1	S17.3 Sealed beam headlamp markings	S6.5.3.3 Sealed beam headlamp markings.
S7.3.2 Type A headlighting system	S9.1 Installation	S10.13.1 Installation.
S7.3.2 Type A headlighting system	Table II Sealed beam headlamps Type A	Table II–a Sealed beam headlamps Type A.

APPENDIX A.—FMVSS NO. 108 REWRITE CROSS REFERENCE—Continued

Current FMVSS No. 108 or incorporated document citation	FMVSS No. 108 rewrite NPRM citation	FMVSS No. 108 rewrite final rule citation
S7.3.2(a)(3)	S9.3 Photometry	S10.13.3 Photometry.
S7.3.2(a)(3)	S6.8.5 Photometric tests	S14.2 Photometric test procedures.
S7.3.2(b)	Table XXIII Headlamp connector test	S14.6.15 Headlamp connector test.
S7.3.2(c)	S9.4 Physical tests	S10.13.4.1 Vibration.
S7.3.2(c)	Table XXIII Vibration test—performance requirements.	S14.6.8.3 Performance requirements.
S7.3.2(d)	S9.4 Physical tests	S10.13.4.1 Wattage.
S7.3.2(d)	Table XXIII Headlamp wattage test—performance requirements.	S14.6.16.2 Performance requirements.
S7.3.3 Type B headlighting system	S9.1 Installation	S10.13.1 Installation.
S7.3.3 Type B headlighting system	Table II Sealed beam headlamps Type B	Table II–a Sealed beam headlamps Type B.
S7.3.3(a)	S9.3 Photometry	S10.13.3 Photometry.
S7.3.3(a)	S6.8.5 Photometric tests	S14.2 Photometric test procedures.
S7.3.3(b)	S9.4 Physical tests	S10.13.4.1 Wattage.
S7.3.3(b)	Table XXIII Headlamp wattage test—performance requirements.	S14.6.16.2 Performance requirements.
S7.3.4 Type C headlighting system	S9.1 Installation	S10.13.1 Installation.
S7.3.4 Type C headlighting system	S9.3 Photometry	S10.13.3 Photometry.
S7.3.4 Type C headlighting system	S6.8.5 Photometric tests	S14.2 Photometric test procedures.
S7.3.4 Type C headlighting system	Table II Sealed beam headlamps Type C	Table II–a Sealed beam headlamps Type C.
S7.3.5 Type D headlighting system	S9.1 Installation	S10.13.1 Installation.
S7.3.5 Type D headlighting system	Table II Sealed beam headlamps Type D	Table II–a Sealed beam headlamps Type D.
S7.3.5(a)	S9.3 Photometry	S10.13.3 Photometry.
S7.3.5(a)	S6.8.5 Photometric tests	S14.2 Photometric test procedures.
S7.3.5(b)	S9.4 Physical tests	S10.13.4.1 Wattage.
S7.3.5(b)	Table XXIII Headlamp wattage test—performance requirements.	S14.6.16.2 Performance requirements.
S7.3.6 Type E headlighting system	S9.1 Installation	S10.13.1 Installation.
S7.3.6 Type E headlighting system	Table II Sealed beam headlamps Type E	Table II–a Sealed beam headlamps Type E.
S7.3.6(a)	S9.3 Photometry	S10.13.3 Photometry.
S7.3.6(a)	S6.8.5 Photometric tests	S14.2 Photometric test procedures.
S7.3.6(b)	S9.4 Physical tests	S10.13.4.1 Wattage.
S7.3.6(b)	Table XXIII Headlamp wattage test—performance requirements.	S14.6.16.2 Performance requirements.
S7.3.7 Type F headlighting system	S9.1 Installation	S10.13.1 Installation.
S7.3.7 Type F headlighting system	Table II Sealed beam headlamps Type F	Table II–a Sealed beam headlamps Type F.
S7.3.7(b)	S9.3 Photometry	S10.13.3 Photometry.
S7.3.7(b)	S6.8.5 Photometric tests	S14.2 Photometric test procedures.
S7.3.7(b)	S6.8.5.6.2 Aiming	S14.2.5.5 Aiming.
S7.3.7(d)	S6.8.5 Photometric tests	S14.2 Photometric test procedures.
S7.3.7(e)(1)	S4 Definitions—Mounting ring (type F sealed beam).	S4 Definitions—Mounting ring (type F sealed beam).
S7.3.7(e)(2)	S4 Definitions—Retaining ring (type F sealed beam).	S4 Definitions—Retaining ring (type F sealed beam).
S7.3.7(e)(5)	Table XXIII Aiming adjustment test laboratory—performance requirements.	S14.6.17.2.2 Type F, replaceable bulb, integral beam, and combination.
S7.3.7(e)(7)	Table XXIII Retaining ring test—procedure	S14.6.14.1 Procedure.
S7.3.7(f)	S17.3 Sealed beam headlamp markings	S6.5.3.3 Sealed beam headlamp markings.
S7.3.7(g)	S9.4 Physical tests	S10.13.4.1 Wattage.
S7.3.7(g)	Table XXIII Headlamp wattage test—performance requirements.	S14.6.16.2 Performance requirements.
S7.3.7(h)	S9.2 Simultaneous aim	S10.13.2 Simultaneous aim.
S7.3.7(h)(1)	S9.2 Simultaneous aim	S10.13.2 Simultaneous aim.
S7.3.7(h)(1)	S6.8.5 Photometric tests	S14.2 Photometric test procedures.
S7.3.7(h)(2)	S9.2 Simultaneous aim	S10.13.2 Simultaneous aim.
S7.3.7(i)	S9.4 Physical tests	S10.13.4.1 Vibration.
S7.3.7(i)	Table XXIII Vibration test—performance requirements.	S14.6.8.3 Performance requirements.
S7.3.8 Type G headlighting system	S9.1 Installation	S10.13.1 Installation.
S7.3.8 Type G headlighting system	Table II Sealed beam headlamps Type G	Table II–a Sealed beam headlamps Type G.
S7.3.8(b)	S9.3 Photometry	S10.13.3 Photometry.
S7.3.8(b)	S6.8.5 Photometric tests	S14.2 Photometric test procedures.
S7.3.8(c)(1)	S9.4 Physical tests	S10.13.4.2 Retaining ring test ex types G & H.
S7.3.8(c)(2)	Table XXIII Torque deflection test	S14.6.13 Torque deflection test.
S7.3.8(c)(2)	Table XXIII Torque deflection test—procedure	S14.6.13.1 Procedure.
S7.3.8(c)(2)	Table XXIII Torque deflection test—procedure	S14.6.13.1.1 Mounting.
S7.3.8(c)(2)	Table XXIII Torque deflection test—procedure	S14.6.13.1.2 Deflectometers.
S7.3.8(c)(2)	Table XXIII Torque deflection test—procedure	S14.6.13.1.3 Deflectometer adapters.
S7.3.8(c)(2)	Table XXIII Torque deflection test—procedure	S14.6.13.1.4 Torque.
S7.3.8(d)	S9.4 Physical tests	S10.13.4.1 Vibration.

APPENDIX A.—FMVSS NO. 108 REWRITE CROSS REFERENCE—Continued

Current FMVSS No. 108 or incorporated document citation	FMVSS No. 108 rewrite NPRM citation	FMVSS No. 108 rewrite final rule citation
S7.3.8(d)	Table XXIII Vibration test—performance requirements.	S14.6.8.3 Performance requirements.
S7.3.8(e)	S9.4 Physical tests	S10.13.4.1 Wattage.
S7.3.8(e)	Table XXIII Headlamp wattage test—performance requirements.	S14.6.16.2 Performance requirements.
S7.3.8(f)	S17.3 Sealed beam headlamp markings	S6.5.3.3 Sealed beam headlamp markings.
S7.3.9 Type H headlighting system	S9.1 Installation	S10.13.1 Installation.
S7.3.9 Type H headlighting system	Table II Sealed beam headlamps Type H	Table II–a Sealed beam headlamps Type H.
S7.3.9(a)	S9.3 Photometry	S10.13.3 Photometry.
S7.3.9(a)	S6.8.5 Photometric tests	S14.2 Photometric test procedures.
S7.3.9(b)	S9.4 Physical tests	S10.13.4.1 Wattage.
S7.3.9(b)	Table XXIII Headlamp wattage test—performance requirements.	S14.6.16.2 Performance requirements.
S7.3.9(c)	S17.3 Sealed beam headlamp markings	S6.5.3.3 Sealed beam headlamp markings.
S7.4 Integral Beam Headlighting System	S10 Integral beam headlamp requirements	S10.14 Integral beam headlighting.
S7.4 Integral Beam Headlighting System	S10.1 Installation	S10.14.1 Installation.
S7.4 Integral Beam Headlighting System	S8.1.1 Headlighting system type	Redundant—eliminated.
S7.4 Integral Beam Headlighting System	S8.1.2 Headlamp category	Redundant—eliminated.
S7.4(a)	S10.1 Installation	S10.14.1 Installation.
S7.4(a)	S10.6 Photometry	S10.14.6 Photometry.
S7.4(a)(1)(i)	S6.8.5 Photometric tests	S14.2 Photometric test procedures.
S7.4(a)(1)(i)	Table II Integral beam headlamps—4 lamp system.	Table II–c Integral beam headlamps—4 lamp system.
S7.4(a)(1)(ii)	S8.2 Simultaneous beam activation	S6.1.5.2.3.
S7.4(a)(1)(ii)	S6.8.5 Photometric tests	S14.2 Photometric test procedures.
S7.4(a)(1)(ii)	Table II Integral beam headlamps—4 lamp system—simultaneous activation.	Table II–c Integral beam headlamps—4 lamp system—simultaneous activation.
S7.4(a)(1)(ii)	Table XVIII Upper beam #6 photometry	Table XVIII Upper beam #6 photometry.
S7.4(a)(1)(ii)	Table XIX Lower beam #5M photometry	Table XIX–b Lower beam #5M photometry.
S7.4(a)(1)(ii)	Table XIX Lower beam #4V photometry	Table XIX–c Lower beam #4V photometry.
S7.4(a)(1)(iii)	S6.8.5 Photometric tests	S14.2 Photometric test procedures.
S7.4(a)(1)(iii)	Table II Integral beam headlamps—4 lamp system U & L.	Table II–c Integral beam headlamps—4 lamp system U & L.
S7.4(a)(2)	Table II Integral beam headlamps—2 lamp system.	Table II–c Integral beam headlamps—2 lamp system.
S7.4(a)(2)(i)	S6.8.5 Photometric tests	S14.2 Photometric test procedures.
S7.4(a)(2)(ii)	S6.8.5 Photometric tests	S14.2 Photometric test procedures.
S7.4(a)(3)	S6.8.5 Photometric tests	S14.2 Photometric test procedures.
S7.4(a)(3)	S6.8.5.6.6 Beam contributor photometry	S14.2.5.9 Beam contributor photometry measurements.
S7.4(a)(3)	Table II Integral beam headlamps—beam contributor system.	Table II–c Integral beam headlamps—beam contributor system.
S7.4(a)(3)	Table II footnote 6	Table II footnote 6.
S7.4(a)(3)	Omitted	Table II footnote 7.
S7.4(b)	S8.1.3 Vertical headlamp arrangement	S6.1.3.5.1 Vertical headlamp arrangement.
S7.4(b)	S8.1.4 Horizontal headlamp arrangement	S6.1.3.5.2 Horizontal headlamp arrangement.
S7.4(c)(1)	S10.4 Markings	S10.14.4 Markings.
S7.4(c)(2)	S10.4 Markings	S10.14.4 Markings.
S7.4(d)	S10.3 Simultaneous aim	S10.14.3 Simultaneous aim.
S7.4(d)	Table II footnote 2	Table II footnote 2.
S7.4(e)	S6.8.5.6 Headlamp photometry measurements.	S14.2.5.3 Measurement distance.
S7.4(f)	S10.2 Aimability	S10.14.2 Aimability.
S7.4(g)	S10.7 Physical tests	S10.14.7.1 Corrosion test.
S7.4(g)	S10.7 Physical tests	S10.14.7.2 Sealing test.
S7.4(g)	S10.7 Physical tests	S10.14.7.2 Dust test.
S7.4(g)	S10.7 Physical tests	S10.14.7.2 Humidity test.
S7.4(g)	S10.7 Physical tests	S10.14.7.3 Abrasion test.
S7.4(g)	S10.7 Physical tests	S10.14.7.4 Chemical resistance test.
S7.4(g)	S10.7 Physical tests	S10.14.7.5 Internal heat test.
S7.4(g)	S11.7 Physical tests	S10.15.7.1 Corrosion test.
S7.4(g)	S11.7 Physical tests	S10.15.7.1 Dust test.
S7.4(g)	S11.7 Physical tests	S10.15.7.1 Humidity test.
S7.4(g)	S11.7 Physical tests	S10.15.7.2 Abrasion test.
S7.4(g)	S11.7 Physical tests	S10.15.7.3 Chemical resistance test.
S7.4(g)	S11.7 Physical tests	S10.15.7.4 Internal heat test.
S7.4(g)	Table XXIII Sealing test—performance requirements.	S14.6.9.2 Performance requirements.
S7.4(h)(1)	S10.7 Physical tests	S10.14.7.3 Abrasion test.
S7.4(h)(1)	S11.7 Physical tests	S10.15.7.2 Abrasion test.

APPENDIX A.—FMVSS NO. 108 REWRITE CROSS REFERENCE—Continued

Current FMVSS No. 108 or incorporated document citation	FMVSS No. 108 rewrite NPRM citation	FMVSS No. 108 rewrite final rule citation
S7.4(h)(1); S8.1	Table XXIII Abrasion test—performance requirements.	S14.6.1.2 Performance requirements.
S7.4(h)(2)	S10.7 Physical tests	S10.14.7.6 Chemical resistance—reflector.
S7.4(h)(2)	S11.7 Physical tests	S10.15.7.5 Chemical resistance—reflector.
S7.4(h)(2)	S10.7 Physical tests	S10.14.7.4 Chemical resistance test.
S7.4(h)(2)	S11.7 Physical tests	S10.15.7.3 Chemical resistance test.
S7.4(h)(2); S8.1	Table XXIII Chemical resistance test—performance requirements.	S14.6.2.2 Performance requirements.
S7.4(h)(2); S8.1	Table XXIII Chemical resistance of reflectors of replaceable lens headlamps test—performance requirements.	S14.6.10.2 Performance requirements.
S7.4(h)(3)	S10.7 Physical tests	S10.14.7.6 Corrosion resistance—reflector.
S7.4(h)(3)	S11.7 Physical tests	S10.15.7.5 Corrosion resistance—reflector.
S7.4(h)(3)	Table XXIII Corrosion-connector test—performance requirements.	S14.6.4.2 Performance requirements.
S7.4(h)(3)	Table XXIII Corrosion-connector test—performance requirements.	S14.6.4.2.1 Corrosion.
S7.4(h)(3)	Table XXIII Corrosion-connector test—performance requirements.	S14.6.4.2.2 Adhesion.
S7.4(h)(3)	Table XXIII Corrosion-connector test—performance requirements.	S14.6.4.2.3 Terminal corrosion.
S7.4(h)(3)	S10.7 Physical tests	S10.14.7.1 Corrosion test.
S7.4(h)(3)	S11.7 Physical tests	S10.15.7.1 Corrosion test.
S7.4(h)(3); S8.1	Table XXIII Corrosion resistance of reflectors of replaceable lens headlamps test—performance requirements.	S14.6.11.2 Performance requirements.
S7.4(h)(4)	S10.7 Physical tests	S10.14.7.2 Dust test.
S7.4(h)(4)	S11.7 Physical tests	S10.15.7.1 Dust test.
S7.4(h)(4); S8.1	Table XXIII Dust test—performance requirements.	S14.6.5.2 Performance requirements.
S7.4(h)(5)(i)	S10.7 Physical tests	S10.14.7.1 Temperature cycle test.
S7.4(h)(5)(i)	S11.7 Physical tests	S10.15.7.1 Temperature cycle test.
S7.4(h)(5)(i); S8.1	Table XXIII Temperature cycle test—performance requirements.	S14.6.6.3.2 Performance requirements.
S7.4(h)(5)(ii)	S10.7 Physical tests	S10.14.7.5 Internal heat test.
S7.4(h)(5)(ii)	S11.7 Physical tests	S10.15.7.4 Internal heat test.
S7.4(h)(5)(ii); S8.1	Table XXIII Internal heat test—performance requirements.	S14.6.6.4.2 Performance requirements.
S7.4(h)(6)	Table XXIII Humidity test—performance requirements.	S14.6.7.2 Performance requirements.
S7.4(h)(6)	S10.7 Physical tests	S10.14.7.2 Humidity test.
S7.4(h)(6)	S11.7 Physical tests	S10.15.7.1 Humidity test.
S7.4(h)(7)	S10.7 Physical tests	S10.14.7.1 Vibration test.
S7.4(h)(7)	S11.7 Physical tests	S10.15.7.1 Vibration test.
S7.4(h)(7)	Table XXIII Vibration test—performance requirements.	S14.6.8.3 Performance requirements.
S7.4(i)	S10.5 Additional light sources	S10.14.5 Additional light sources.
S7.5 Replaceable bulb headlighting system	S11 Replaceable bulb headlamp requirements	S10.15 Replaceable bulb headlighting system.
S7.5 Replaceable bulb headlighting system	S8.1.1 Headlighting system type	Redundant—eliminated.
S7.5 Replaceable bulb headlighting system	S8.1.2 Headlamp category	Redundant—eliminated.
S7.5(a)	S11.1 Installation	S10.15.1 Installation.
S7.5(b)	S11.6 Photometry	S10.15.6 Photometry.
S7.5(b)	S6.8.5 Photometric tests	S14.2 Photometric test procedures.
S7.5(c)	S6.8.5.6 Headlamp photometry measurements.	S14.2.5.3 Measurement distance.
S7.5(d)	S8.1.3 Vertical headlamp arrangement	S6.1.3.5.1 Vertical headlamp arrangement.
S7.5(d)	S8.1.4 Horizontal headlamp arrangement	S6.1.3.5.2 Horizontal headlamp arrangement.
S7.5(d)	Table II Replaceable bulb headlamps—2 lamp system—without HB2.	Table II–d Replaceable bulb headlamps—2 lamp system—without HB2.
S7.5(d)	Table II Replaceable bulb headlamps—4 lamp system—without HB2.	Table II–d Replaceable bulb headlamps—4 lamp system—without HB2.
S7.5(d)(1)	S11.2 Aiming restrictions	S10.15.2 Aiming restrictions.
S7.5(d)(2)	S6.8.5 Photometric tests	S14.2 Photometric test procedures.
S7.5(d)(3)(i)(A)	Omitted	S10.15.4.1.1 Exception.
S7.5(d)(3)(i)(B)	S11.5 Markings	S10.15.4.1 U & L.
S7.5(d)(3)(ii)(A)	Omitted	S10.15.4.1.1 Exception.
S7.5(d)(3)(ii)(B)	S11.5 Markings	S10.15.4.1 U & L.
S7.5(e)	Table II Replaceable bulb headlamps—2 lamp system—with HB2.	Table II–d Replaceable bulb headlamps—2 lamp system—with HB2.
S7.5(e)	Table II Replaceable bulb headlamps—4 lamp system—with HB2.	Table II–d Replaceable bulb headlamps—4 lamp system—with HB2.

APPENDIX A.—FMVSS NO. 108 REWRITE CROSS REFERENCE—Continued

Current FMVSS No. 108 or incorporated document citation	FMVSS No. 108 rewrite NPRM citation	FMVSS No. 108 rewrite final rule citation
S7.5(e)(1)	S11.2 Aiming restrictions	S10.15.2 Aiming restrictions.
S7.5(e)(2)	S6.8.5 Photometric tests	S14.2 Photometric test procedures.
S7.5(e)(3)(i)	S11.5 Markings	S10.15.4.1 U & L.
S7.5(e)(3)(ii)	S11.5 Markings	S10.15.4.1 U & L.
S7.5(f)	S11.4 Replacement equipment	S10.15.3 Replacement equipment.
S7.5(g)	S17.4 Replaceable bulb headlamp markings	S6.5.3.4 Replaceable bulb headlamp markings.
S7.5(h)	S11.2 Aiming restrictions	S10.15.2 Aiming restrictions.
S7.5(i)	S11.7 Physical tests	S10.15.7 Physical tests.
S7.5(i)	Table XXIII Sealing test—performance requirements.	S14.6.9.2 Performance requirements.
S7.5(j)	S11.3 Additional light sources	S10.15.5. Additional light sources.
S7.6 Combination Headlighting System	S12 Combination headlamps	S10.16 Combination headlighting system.
S7.6 Combination Headlighting System	S8.1.1 Headlighting system type	Redundant—eliminated.
S7.6 Combination Headlighting System	S8.1.2 Headlamp category	Redundant—eliminated.
S7.6.1	S12.1 Installation	S10.16.1 Installation.
S7.6.2	S12.2 Photometry	S10.16.2 Photometry.
S7.6.2	S12.3 Physical tests	S10.16.3.1 Type F sealed beam.
S7.6.2	S6.8.5 Photometric tests	S14.2 Photometric test procedures.
S7.6.2	Table II Combination headlamps—2 lamp system.	Table II–b Combination headlamps—2 lamp system.
S7.6.2.1	S12.2 Photometry	S10.16.2 Photometry.
S7.6.2.1	S12.3 Physical tests	S10.16.3.2 Integral beam.
S7.6.2.2	S12.2 Photometry	S10.16.2 Photometry.
S7.6.2.2	S12.3 Physical tests	S10.16.3.3 Replaceable bulb.
S7.6.3	S12.2 Photometry	S10.16.2 Photometry.
S7.6.3	S6.8.5 Photometric tests	S14.2 Photometric test procedures.
S7.6.3	Table II Combination headlamps—4 lamp system.	Table II–b Combination headlamps—4 lamp system.
S7.7 Replaceable light sources	S15 Replaceable light sources	S11 Replaceable light sources.
S7.7(a)	S15.1 Markings	S11.1 Markings.
S7.7(b)	S15.2 Power and flux measurement	S11.4.2 Power & Luminous flux tests.
S7.7(b)	S15.2; S15.3	S14.7.3 Replaceable light source power and flux measurement procedure.
S7.7(b)	S15.2; S15.3	S14.7.3.1 Seasoning.
S7.7(b)	S15.2; S15.3	S14.7.3.1.1 Resistive filament source.
S7.7(b)	S15.2; S15.3	S14.7.3.1.2 Discharge source.
S7.7(b)	S15.2; S15.3	S14.7.3.2 Test voltage.
S7.7(b)	S15.2; S15.3	S14.7.3.3 Luminous flux measurement.
S7.7(b)	S15.2; S15.3	S14.7.3.3.1 Resistive filament light source setup.
S7.7(b)	S15.2; S15.3	S14.7.3.3.2 Discharge light source setup.
S7.7(c)	S15.6 Physical tests	S11.4.1 Pressure test.
S7.7(c)	Table XXIII Pressure test for replaceable light sources.	S14.7.2 Pressure test for replaceable light sources.
S7.7(c)	Table XXIII Pressure test for replaceable light sources—procedure.	S14.7.2.1 Procedure.
S7.7(c)	Table XXIII Pressure test for replaceable light sources—procedure.	S14.7.2.1.1 Force application.
S7.7(c)	Table XXIII Pressure test for replaceable light sources—procedure.	S14.7.2.1.2 Application sequence.
S7.7(c)	Table XXIII Pressure test for replaceable light sources—performance requirements.	S14.7.2.2 Performance requirements.
S7.7(d)	S15.2; S15.3	S14.7.3 Replaceable light source power and flux measurement procedure.
S7.7(d)	S15.2; S15.3	S14.7.3.1 Seasoning.
S7.7(d)	S15.2; S15.3	S14.7.3.1.1 Resistive filament source.
S7.7(d)	S15.2; S15.3	S14.7.3.1.2 Discharge source.
S7.7(d)	S15.2; S15.3	S14.7.3.2 Test voltage.
S7.7(d)	S15.2; S15.3	S14.7.3.3 Luminous flux measurement.
S7.7(d)	S15.2; S15.3	S14.7.3.3.1 Resistive filament light source setup.
S7.7(d)	S15.2; S15.3	S14.7.3.3.2 Discharge light source setup.
S7.7(d)	S15.3 Power and flux measurement	S11.4.2 Power & Luminous flux tests.
S7.7(e)	S15.4 Ballast markings	S11.2 Ballast markings.
S7.7(f)	S15.5 Gas discharge laboratory life	S11.3 Gas discharge laboratory life.
S7.7(g)	S15.6 Physical tests	S11.4.1 Deflection test.
S7.7(g)	Table XXIII Deflection test for replaceable light sources—performance requirements.	S14.7.1.2 Performance requirements.
S7.8 Aimability Performance Requirements	Table XXIII Aiming adjustment test laboratory	S14.6.17 Aiming adjustment test—laboratory.
S7.8 Aimability Performance Requirements	Table XXIII Aiming adjustment test on vehicle	S14.6.18 Aiming adjustment test—on vehicle.

APPENDIX A.—FMVSS NO. 108 REWRITE CROSS REFERENCE—Continued

Current FMVSS No. 108 or incorporated document citation	FMVSS No. 108 rewrite NPRM citation	FMVSS No. 108 rewrite final rule citation
S7.8 Aimability Performance Requirements	Table XXIII Aiming adjustment test on vehicle—performance requirements.	S14.6.18.2 Performance requirements.
S7.8.1	S14.6 Optical axis marking	S10.18.5 Optical axis marking.
S7.8.1(a)	S14.6.2 Optical axis marking—lamp	S10.18.5.2 Optical axis marking—lamp.
S7.8.1(b)	S14.6.1 Optical axis marking—vehicle	S10.18.5.1 Optical axis marking—vehicle.
S7.8.1(c)	S14.6.3 Optical axis marking—visual aim headlamp.	S10.18.5.3 Optical axis marking—visual aim headlamp.
S7.8.2	S14.1 Headlamp mounting and aiming	S10.18.1 Headlamp mounting and aiming.
S7.8.2.1(a)	S14.4 Aim adjustment interaction	S10.18.3 Aim adjustment interaction.
S7.8.2.1(a)	Table XXIII Aiming adjustment test on vehicle—performance requirements.	S14.6.18.2.3 Aim interaction.
S7.8.2.1(b)	S14.4 Aim adjustment interaction	S10.18.3 Aim adjustment interaction.
S7.8.2.1(c)	S14.5 Horizontal adjustment—visually aimed headlamp.	S10.18.4 Horizontal adjustment—visually aimed headlamp.
S7.8.2.1(c)	Table XXIII Aiming adjustment test on vehicle—performance requirements.	S14.6.18.2.3 Aim interaction.
S7.8.2.1(c)	Table XXIII Aiming adjustment test laboratory—performance requirements.	S14.6.17.2 Performance requirements.
S7.8.2.2(a)	S14.7 Moveable reflectors	S10.18.6 Moveable reflector requirements.
S7.8.2.2(a)	Table XXIII Aiming adjustment test laboratory—performance requirements.	S14.6.17.2.3 Moveable reflector.
S7.8.2.2(b)	S14.7 Moveable reflectors	S10.18.6 Moveable reflector requirements.
S7.8.2.2(b)	S6.8.5.6.2(h) Aiming—Moveable reflector	S14.2.5.10.1.
S7.8.2.2(c)	Table XXIII Aiming adjustment test laboratory—performance requirements.	S14.6.17.2.3 Moveable reflector.
S7.8.2.2(d)	Table XXIII Aiming adjustment test laboratory—performance requirements.	S14.6.17.2 Performance requirements.
S7.8.3	S6.8.5.6.2(h) Aiming—Moveable reflector	S14.2.5.10.2.
S7.8.3	Table XXIII Aiming adjustment test on vehicle—procedure.	S14.6.18.1.2 Vehicle pitch.
S7.8.3	Table XXIII Aiming adjustment test on vehicle—performance requirements.	S14.6.18.2.1 Vertical range.
S7.8.3	Table XXIII Aiming adjustment test on vehicle—performance requirements.	S14.6.18.2.2 Continuous vertical adjustment.
S7.8.3	Table XXIII Aiming adjustment test laboratory—performance requirements.	S14.6.17.2.1 Sealed beam except Type F.
S7.8.3	Table XXIII Aiming adjustment test laboratory—performance requirements.	S14.6.17.2.2 Type F, replaceable bulb, integral beam, and combination.
S7.8.4	S6.8.5.6.2(h) Aiming—Moveable reflector	S14.2.5.10.3.
S7.8.4	Table XXIII Aiming adjustment test laboratory—performance requirements.	S14.6.17.2.1 Sealed beam except Type F.
S7.8.4	Table XXIII Aiming adjustment test laboratory—performance requirements.	S14.6.17.2.2 Type F, replaceable bulb, integral beam, and combination.
S7.8.5	S14.2 Headlamp obstructions	S6.2.3 Headlamp Obstructions.
S7.8.5	S14.2 Headlamp obstructions	S6.2.3.1 Coverings.
S7.8.5	S14.2 Headlamp obstructions	S6.2.3.2 Wipers.
S7.8.5	S10.2 Aimability	S10.2 Aiming.
S7.8.5	S14.3 Headlamp aiming systems	S10.18.2 Headlamp aiming systems.
S7.8.5.1 External aiming	S14.8 External aiming	S10.18.7 External aiming.
S7.8.5.1(a)	S10.7 Physical tests	S10.14.7.7 Torque deflection test.
S7.8.5.1(a)	S11.7 Physical tests	S10.15.7.6 Torque deflection test.
S7.8.5.1(a)	Table XXIII Torque deflection test	S14.6.13 Torque deflection test.
S7.8.5.1(a)	Table XXIII Torque deflection test—procedure	S14.6.13.1 Procedure.
S7.8.5.1(a)	Table XXIII Torque deflection test—procedure	S14.6.13.1.1 Mounting.
S7.8.5.1(a)	Table XXIII Torque deflection test—procedure	S14.6.13.1.2 Deflectometers.
S7.8.5.1(a)	Table XXIII Torque deflection test—procedure	S14.6.13.1.3 Deflectometer adapters.
S7.8.5.1(a)	Table XXIII Torque deflection test—procedure	S14.6.13.1.4 Torque.
S7.8.5.1(a)	Table XXIII Torque deflection test—procedure	S14.6.13.1.5 Torque application.
S7.8.5.1(a)	Table XXIII Torque deflection test—procedure	S14.6.13.1.6 Group I aiming pads.
S7.8.5.1(a)	Table XXIII Torque deflection test—procedure	S14.6.13.1.7 Group II aiming pads.
S7.8.5.1(a)	Table XXIII Torque deflection test—procedure	S14.6.13.1.8 Non-adjustable locating plates.
S7.8.5.1(a)	Table XXIII Torque deflection test—performance requirements.	S14.6.13.2 Performance requirements.
S7.8.5.1(b)	Table XXIII Inward force test	S14.6.12 Inward force test.
S7.8.5.1(b)	S10.7 Physical tests	S10.14.7.1 Inward force test.
S7.8.5.1(b)	S11.7 Physical tests	S10.15.7.1 Inward force test.
S7.8.5.1(b)	Table XXIII Inward force test—performance requirements.	S14.6.12.2 Performance requirements.
S7.8.5.1(c)	Table XXIII Corrosion test—procedure	S14.6.3.1 Procedure.
S7.8.5.1(c)	Table XXIII VHAD corrosion test—procedure	S14.8.6.1 Procedure.

APPENDIX A.—FMVSS NO. 108 REWRITE CROSS REFERENCE—Continued

Current FMVSS No. 108 or incorporated document citation	FMVSS No. 108 rewrite NPRM citation	FMVSS No. 108 rewrite final rule citation
S7.8.5.1(c)	Table XXIII Corrosion test—performance requirements.	S14.6.3.2 Performance requirements.
S7.8.5.1(c)	Table XXIII VHAD corrosion test—performance requirements.	S14.8.6.2 Performance requirements.
S7.8.5.1(d)	S14.8.1 Headlamp aiming device locating plates.	S10.18.7.1 Headlamp aiming device locating plates.
S7.8.5.1(d)(1)	S14.8.1.1 Aiming pads	S10.18.7.1.1 Aiming pads.
S7.8.5.1(d)(2)	S14.8.1.2 Aiming dimension marking	S10.18.7.1.2 Aiming dimension marking.
S7.8.5.1(e)	S14.8.2 Nonadjustable headlamp aiming device locating plates.	S10.18.7.2 Nonadjustable headlamp aiming device locating plates.
S7.8.5.2 On-vehicle aiming	S14.9 On-vehicle aiming	S10.18.8 On-vehicle aiming.
S7.8.5.2(a) Aim	S14.9.1 Aim	S10.18.8.1 Aim.
S7.8.5.2(a)(1) Vertical axis	S14.9.1.1 Vertical aim	S10.18.8.1.1 Vertical aim.
S7.8.5.2(a)(1)(i)	S14.9.1.1.1 Graduations	S10.18.8.1.1.1 Graduations.
S7.8.5.2(a)(1)(ii)	S14.9.1.1.2 VHAD markings	S10.18.8.1.1.2 VHAD markings.
S7.8.5.2(a)(1)(iii)	S14.9.1.1.3 Graduation scale	S10.18.8.1.1.3 Graduation scale.
S7.8.5.2(a)(1)(iv)	S14.9.1.1.4 Vertical indicator range	S10.18.8.1.1.4 Vertical indicator range.
S7.8.5.2(a)(1)(v)	S14.9.1.1.5 Floor slope compensation	S10.18.8.1.1.5 Floor slope compensation.
S7.8.5.2(a)(1)(vi)	S14.9.1.1.6 Graduation legibility	S10.18.8.1.1.6 Graduation legibility.
S7.8.5.2(a)(2) Horizontal aim	S14.9.1.2 Horizontal aim	S10.18.8.1.2 Horizontal aim.
S7.8.5.2(a)(2)(i)	S14.9.1.2.1 Graduation scale	S10.18.8.1.2.1 Graduation scale.
S7.8.5.2(a)(2)(ii)	S14.9.1.2.2 Horizontal markings	S10.18.8.1.2.2 Horizontal markings.
S7.8.5.2(a)(2)(iii)	S14.9.1.2.3 Graduation legibility	S10.18.8.1.2.3 Graduation legibility.
S7.8.5.2(a)(2)(iv)	S14.9.1.2.4 Horizontal indicator range	S10.18.8.1.2.4 Horizontal indicator range.
S7.8.5.2(b) Aiming instructions	S14.9.2 Aiming instructions	S10.18.8.2 Aiming instructions.
S7.8.5.2(b)(1)	S14.9.2.1 Aiming instruction location and content.	S10.18.8.2.1 Aiming instruction location and content.
S7.8.5.2(b)(2)	S14.9.2.2 Remote indicator instructions	S10.18.8.2.2 Remote indicator instructions.
S7.8.5.2(b)(3)	S14.4.1 Excess aim interaction	S10.18.3.1 Excess aim interaction.
S7.8.5.2(c)	S14.9.3 Permanent calibrations	S10.18.8.3 Permanent calibration.
S7.8.5.2(d) Testing the VHAD	S14.9.5 Physical tests	S10.18.8.5 Physical tests.
S7.8.5.2(d)(1)	S6.8.5.6 Headlamp photometry measurements.	S14.2.5.3 Measurement distance.
S7.8.5.2(d)(1)	S6.8.5.6.2 Aiming	S14.2.5.5 Aiming.
S7.8.5.2(d)(1)	S6.8.5.6.2(b) Aiming—VHAD	S14.2.5.5.2 Mechanically aimable headlamps equipped with a VHAD.
S7.8.5.2(d)(2)	S14.9.4 Replacement units	S10.18.8.4 Replacement units.
S7.8.5.2(d)(3)(i)	Table XXIII VHAD scale graduation test	S14.8.2 Scale graduation test.
S7.8.5.2(d)(3)(i)	Table XXIII VHAD scale graduation test—procedure.	S14.8.2.1 Procedure.
S7.8.5.2(d)(3)(i)	Table XXIII VHAD scale graduation test—performance requirements.	S14.8.2.2 Performance requirements.
S7.8.5.2(d)(3)(ii)	Table XXIII	S14.8.1 Samples.
S7.8.5.2(d)(3)(ii)(A)	Table XXIII VHAD cold scale graduation test	S14.8.3 Cold scale graduation test.
S7.8.5.2(d)(3)(ii)(A)	Table XXIII VHAD cold scale graduation test—procedure.	S14.8.3.1 Procedure.
S7.8.5.2(d)(3)(ii)(A)	Table XXIII VHAD cold scale graduation test—performance requirements.	S14.8.3.2 Performance requirements.
S7.8.5.2(d)(3)(ii)(B)	Table XXIII VHAD hot scale graduation test	S14.8.4 Hot scale graduation test.
S7.8.5.2(d)(3)(ii)(B)	Table XXIII VHAD hot scale graduation test—procedure.	S14.8.4.1 Procedure.
S7.8.5.2(d)(3)(ii)(B)	Table XXIII VHAD hot scale graduation test—performance requirements.	S14.8.4.2 Performance requirements.
S7.8.5.2(d)(3)(ii)(C)	Table XXIII VHAD thermal cycle test	S14.8.5 Thermal cycle test.
S7.8.5.2(d)(3)(ii)(C)	Table XXIII VHAD thermal cycle test—procedure.	S14.8.5.1 Procedure.
S7.8.5.2(d)(3)(ii)(C)	Table XXIII VHAD thermal cycle test—performance requirements.	S14.8.5.2 Performance requirements.
S7.8.5.2(d)(3)(ii)(D)	Table XXIII VHAD corrosion test	S14.8.6 Corrosion test.
S7.8.5.2(d)(3)(ii)(E)	Table XXIII VHAD photometry test	S14.8.7 Photometry test.
S7.8.5.2(d)(3)(ii)(E)	Table XXIII VHAD photometry test—procedure.	S14.8.7.1 Procedure.
S7.8.5.2(d)(3)(ii)(E)	Table XXIII VHAD photometry test—performance requirements.	S14.8.7.2 Performance requirements.
S7.8.5.3 Visual/optical aiming	S14.10 Visual/optical aiming	S10.18.9 Visual/optical aiming.
S7.8.5.3(a) Vertical aim, lower beam	S14.10.1 Vertical aim, lower beam	S10.18.9.1 Vertical aim, lower beam.
S7.8.5.3(a)(1) Vertical position of cutoff	S14.10.1.1 Vertical position of the cutoff	S10.18.9.1.1 Vertical position of the cutoff.
S7.8.5.3(a)(1) Vertical position of cutoff	S6.8.5.6.2(c) Aiming—LB VOL/VOR vertical	S14.2.5.5.3.1 VOL.
S7.8.5.3(a)(1) Vertical position of cutoff	S6.8.5.6.2(c) Aiming—LB VOL/VOR vertical	S14.2.5.5.3.2 VOR.
S7.8.5.3(a)(2) Vertical gradient	S14.10.1.2 Vertical gradient	S10.18.9.1.2 Vertical gradient.
S7.8.5.3(a)(3) Horizontal position of the cutoff	S14.10.1.3 Horizontal position of the cutoff	S10.18.9.1.3 Horizontal position of the cutoff.

APPENDIX A.—FMVSS NO. 108 REWRITE CROSS REFERENCE—Continued

Current FMVSS No. 108 or incorporated document citation	FMVSS No. 108 rewrite NPRM citation	FMVSS No. 108 rewrite final rule citation
S7.8.5.3(a)(4) Maximum inclination of cutoff	S14.10.1.4 Maximum inclination of the cutoff	S10.18.9.1.4 Maximum inclination of the cutoff.
S7.8.5.3(a)(5)(i)	S14.10.1.5 Measuring the cutoff parameter	S10.18.9.1.5 Measuring the cutoff parameter.
S7.8.5.3(a)(5)(i)	S14.10.1.5.1 Test position	S10.18.9.1.5.1 Test position.
S7.8.5.3(a)(5)(ii)	S14.10.1.5.2 Headlamp aiming	S10.18.9.1.5.2 Headlamp aiming.
S7.8.5.3(a)(5)(iii)	S14.10.1.5.3 Beam scanning	S10.18.9.1.5.3 Beam scanning.
S7.8.5.3(a)(5)(iv)	S14.10.1.5.4 Gradient calculation	S10.18.9.1.5.4 Gradient calculation.
S7.8.5.3(b) Horizontal aim, lower beam	S14.10.2 Horizontal aim, lower beam	S10.18.9.2 Horizontal aim, lower beam.
S7.8.5.3(b) Horizontal aim, lower beam	S6.8.5.6.2(d) Aiming—LB VOL/VOR horizontal	S14.2.5.5.4 Visually aimable lower beam headlamps—horizontal aim.
S7.8.5.3(c) Vertical aim, upper beam	S14.10.3 Vertical aim, upper beam	S10.18.9.3 Vertical aim, upper beam.
S7.8.5.3(c)(1)	S14.10.3.1 Combined upper and lower beams	S10.18.9.3.1 Combined upper and lower beams.
S7.8.5.3(c)(1)	S6.8.5.6.2(e) Aiming—UB VOL/VOR vertical	S14.2.5.5.5.1 Combined UB & LB.
S7.8.5.3(c)(2)	S14.10.3.2 Upper beam without lower beam	S10.18.9.3.2 Upper beam without lower beam.
S7.8.5.3(c)(2)	S6.8.5.6.2(e) Aiming—UB VOL/VOR vertical	S14.2.5.5.5.2 Non-combined UB & LB.
S7.8.5.3(d) Horizontal aim, upper beam	S14.10.4 Horizontal aim, upper beam	S10.18.9.4 Horizontal aim, upper beam.
S7.8.5.3(d)(1)	S6.8.5.6.2(f) Aiming—UB VOL/VOR horizontal	S14.2.5.5.6.1 Combined UB & LB.
S7.8.5.3(d)(1)	S14.10.4.1 Combined upper and lower beams	S10.18.9.4.1 Combined upper and lower beams.
S7.8.5.3(d)(2)	S6.8.5.6.2(f) Aiming—UB VOL/VOR horizontal	S14.2.5.5.6.2 Non-combined UB & LB with VHAD.
S7.8.5.3(d)(2)	S14.10.4.2 Upper beam without lower beam	S10.18.9.4.2 Upper beam without lower beam.
S7.8.5.3(d)(3)	S6.8.5.6.2(f) Aiming—UB VOL/VOR horizontal	S14.2.5.5.6.3 Non-combined UB & LB without VHAD.
S7.8.5.3(d)(3)	S14.10.4.3 Upper beam without lower beam of VHAD.	S10.18.9.4.3 Upper beam without lower beam of VHAD.
S7.8.5.3(e)(1)	S14.10.5 Photometric measurements	S10.18.9.5 Photometry.
S7.8.5.3(e)(2)	S6.8.5.6.2 Aiming	S14.2.5.5 Aiming.
S7.8.5.3(e)(2)	S6.8.5.6.2(c) Aiming—LB VOL/VOR vertical	S14.2.5.5.3.1 VOL.
S7.8.5.3(e)(2)	S6.8.5.6.2(c) Aiming—LB VOL/VOR vertical	S14.2.5.5.3.2 VOR.
S7.8.5.3(e)(2)	S6.8.5.6.2(e) Aiming—UB VOL/VOR vertical	S14.2.5.5.5.1 Combined UB &LB.
S7.8.5.3(e)(2)	S6.8.5.6.2(e) Aiming—UB VOL/VOR vertical	S14.2.5.5.5.2 Non-combined UB & LB.
S7.8.5.3(f)(1)	S14.6.3 Optical axis marking—visual aim headlamp.	S10.18.5.3 Optical axis marking—visual aim headlamp.
S7.8.5.3(f)(2)(i)	S14.10.6.1 VOL/VOR/VO markings	S10.18.9.6.1 VOL/VOR/VO markings.
S7.8.5.3(f)(2)(ii)	S14.10.6.1 VOL/VOR/VO markings	S10.18.9.6.1 VOL/VOR/VO markings.
S7.8.5.3(f)(2)(iii)	S14.10.6.2 VOR/VO markings on sealed beams.	S10.18.9.6.2 VOR/VO markings on sealed beams.
S7.8.5.3(f)(2)(iv)	S14.10.6.1 VOL/VOR/VO markings	S10.18.9.6.1 VOL/VOR/VO markings.
S7.8.5.3(f)(2)(v)	S14.10.6 Visual/optical identification marking	S10.18.9.6 Visual/optical identification marking.
S7.9.1(b)	S8.1 Headlighting systems	S6.1.3.5.3 Motorcycle headlamp arrangement.
S7.9.2	S13 Motorcycle headlamp requirements	S10.17 Motorcycle headlighting system.
S7.9.2	S6.8.5 Photometric tests	S14.2 Photometric test procedures.
S7.9.2(a)	S13.2 Photometry	S10.17.3 Photometry.
S7.9.2(b)	S8.1 Headlighting systems	S10.1.2 Motorcycles.
S7.9.3	S6.8.5.6.2(i) Aiming—Motorcycle UB	S14.2.5.5.8 Motorcycle headlamp—upper beam headlamps designed to comply with Table XX.
S7.9.4.1	S13.5 Motorcycle headlamp modulation system.	S10.17.5 Motorcycle headlamp modulation system.
S7.9.4.1(a)	S13.5.1(a) Rate	S10.17.5.1(a) Rate.
S7.9.4.1(b)	S13.5.1(b) Maximum power	S10.17.5.1(b) Maximum power.
S7.9.4.1(c)	S13.5.1(c) Minimum intensity	S10.17.5.1(c) Minimum intensity.
S7.9.4.1(d)	S13.5.1(d) Wiring	S10.17.5.1(d) Wiring.
S7.9.4.1(e)	S13.5.1(e) Failure mode	S10.17.5.1(e) Failure mode.
S7.9.4.1(f)	S13.5.1(f) Sensor	S10.17.5.1(f) Sensor.
S7.9.4.1(g)	S13.5.1(g) Voltage drop	S10.17.5.1(g) Voltage drop.
S7.9.4.1(h)	S13.5.1(h) Full voltage operation	S10.17.5.1(h) Full voltage operation.
S7.9.4.2(a)	S13.5.2 Replacement modulators	S10.17.5.2 Replacement modulators.
S7.9.4.2(a)	S13.5.2.1 Replacement performance	S10.17.5.2.1 Replacement performance.
S7.9.4.2(b)	S13.5.2.2 Replacement instructions	S10.17.5.2.2 Replacement instructions.
S7.9.5	S13.4 Motorcycle replaceable bulb headlamp marking.	S10.17.2 Motorcycle replaceable bulb headlamp marking.
S7.9.6.1	S13.1 Installation	S10.17.1 Installation.
S7.9.6.2(a)	S13.1.1 Single headlamp	S10.17.1.1 Single headlamp.
S7.9.6.2(b)	S13.1.2 Two headlamps with both beams	S10.17.1.2 Two headlamps with both beams.

APPENDIX A.—FMVSS NO. 108 REWRITE CROSS REFERENCE—Continued

Current FMVSS No. 108 or incorporated document citation	FMVSS No. 108 rewrite NPRM citation	FMVSS No. 108 rewrite final rule citation
S7.9.6.2(c)	S13.1.3 Two headlamps, upper beam and lower beam.	S10.17.1.3 Two headlamps, upper beam and lower beam.
S8.2 Abrasion	Table XXIII Abrasion test	S14.6.1 Abrasion test.
S8.2 Abrasion	Table XXIII Abrasion test—procedure	S14.6.1.1 Procedure.
S8.2(a)	Table XXIII Abrasion test—procedure	S14.6.1.1.2 Abrading pad alignment.
S8.2(b)	Table XXIII Abrasion test—procedure	S14.6.1.1.3 Abrasion test procedure.
S8.2(c)(1)	Table XXIII Abrasion test—procedure	S14.6.1.1.1 Abrading pad.
S8.2(c)(3)	Table XXIII Abrasion test—procedure	S14.6.1.1.1 Abrading pad.
S8.2(c)(4)	Table XXIII Abrasion test—procedure	S14.6.1.1.2 Abrading pad alignment.
S8.2(d)	Table XXIII Abrasion test—procedure	S14.6.1.1.3 Abrasion test procedure.
S8.2(e)	Table XXIII Abrasion test—procedure	S14.6.1.1.1 Abrading pad.
S8.3 Chemical resistance	Table XXIII Chemical resistance test	S14.6.2 Chemical resistance test.
S8.3 Chemical resistance	Table XXIII Chemical resistance test—procedure.	S14.6.2.1 Procedure.
S8.3(a)	Table XXIII Chemical resistance test—procedure.	S14.6.2.1.2 Fluid application.
S8.3(b)	Table XXIII Chemical resistance test—procedure.	S14.6.2.1.1 Test fluids.
S8.3(c)	Table XXIII Chemical resistance test—procedure.	S14.6.2.1.3 Test duration.
S8.4 Corrosion	Table XXIII Corrosion—connector test	S14.6.4 Corrosion—connector test.
S8.4 Corrosion	Table XXIII Corrosion—connector test—procedure.	S14.6.4.1 Procedure.
S8.4(a)	Table XXIII Corrosion—connector test—procedure (a).	S14.6.4.1.1 Connector test.
S8.4(a)	S10.7 Physical tests	S10.14.7.2 Connector—corrosion test.
S8.4(a)	S11.7 Physical tests	S10.15.7.1 Corrosion—connector test.
S8.4(b)	Table XXIII Corrosion—connector test—procedure (b).	S14.6.4.1.2 Salt spray.
S8.4(b)	Table XXIII Corrosion—connector test—procedure (b).	S14.6.4.1.3 Cycle.
S8.4(b)	Table XXIII Corrosion—connector test—procedure (b).	S14.6.4.1.4 Chamber.
S8.4(b)	Table XXIII Corrosion—connector test—procedure (b).	S14.6.4.1.5 Wash.
S8.4(c)	Table XXIII Corrosion—connector test—procedure (c).	S14.6.4.1.6 Connector test.
S8.5 Dust	Table XXIII Dust test	S14.6.5 Dust test.
S8.5 Dust	Table XXIII Dust test—procedure	S14.6.5.1 Procedure.
S8.5 Dust	Table XXIII Dust test—procedure	S14.6.5.1.1 Setup.
S8.5 Dust	Table XXIII Dust test—procedure	S14.6.5.1.2 Cycle.
S8.5 Dust	Table XXIII Dust test—procedure	S14.6.5.1.3 Test duration.
S8.6 Temperature and internal heat test	Table XXIII	S14.6.6 Temperature cycle test and internal heat test.
S8.6 Temperature and internal heat test	Table XXIII Temperature cycle test and internal heat test—procedure.	S14.6.6.1 Samples.
S8.6 Temperature and internal heat test	Table XXIII Temperature cycle test and internal heat test—procedure.	S14.6.6.2 General procedure.
S8.6 Temperature and internal heat test	Table XXIII Temperature cycle test and internal heat test—procedure.	S14.6.6.2.1 General activation.
S8.6 Temperature and internal heat test	Table XXIII Temperature cycle test and internal heat test—procedure.	S14.6.6.2.2 Turn signal activation.
S8.6 Temperature and internal heat test	Table XXIII Temperature cycle test and internal heat test—procedure.	S14.6.6.2.3 Headlamp beam activation.
S8.6.1 Temperature cycle	Table XXIII Temperature cycle test	S14.6.6.3 Temperature cycle test.
S8.6.1 Temperature cycle	Table XXIII Temperature cycle test—procedure.	S14.6.6.3.1 Procedure.
S8.6.1 Temperature cycle	Table XXIII Temperature cycle test—procedure.	S14.6.6.3.1.1 Cycle.
S8.6.1 Temperature cycle	Table XXIII Temperature cycle test—procedure.	S14.6.6.3.1.2 Activation.
S8.6.1 Temperature cycle	Table XXIII Temperature cycle test—procedure.	S14.6.6.3.1.3 Test chamber(s).
S8.6.1 Temperature cycle	Table XXIII Temperature cycle test—procedure.	S14.6.6.3.1.4 Vents and drains.
S8.6.2 Internal heat test	Table XXIII Internal heat test	S14.6.6.4 Internal heat test.
S8.6.2 Internal heat test	Table XXIII Internal heat test—procedure	S14.6.6.4.1 Procedure.
S8.6.2(a)	Table XXIII Internal heat test—procedure	S14.6.6.4.1.1 Photometric output reduction.
S8.6.2(a)	Table XXIII Internal heat test—procedure	S14.6.6.4.1.2 HB1 or HB2 light sources.
S8.6.2(a)	Table XXIII Internal heat test—procedure	S14.6.6.4.1.3 Photometric measurements.
S8.6.2(b)	Table XXIII Internal heat test—procedure	S14.6.6.4.1.4 Setup.

APPENDIX A.—FMVSS NO. 108 REWRITE CROSS REFERENCE—Continued

Current FMVSS No. 108 or incorporated document citation	FMVSS No. 108 rewrite NPRM citation	FMVSS No. 108 rewrite final rule citation
S8.6.2(b)	Table XXIII Internal heat test—procedure	S14.6.6.4.1.5 Cycle.
S8.6.2(c)	Table XXIII Internal heat test—procedure	S14.6.6.4.1.6 Cleaning.
S8.7(a)	Table XXIII Humidity test—procedure(a)	S14.6.7.1.1 Test fixture.
S8.7(a)	Table XXIII Humidity test—procedure(a)	S14.6.7.1.2 Headlamp mounting.
S8.7(b)	Table XXIII Humidity test—procedure(b)	S14.6.7.1.3 Setup.
S8.7(b)	Table XXIII Humidity test—procedure(b)	S14.6.7.1.4 Cycle.
S8.7(c)	Table XXIII Humidity test—procedure(c)	S14.6.7.1.5 Air flow test setup.
S8.7(d)	Table XXIII Humidity test—procedure(d)	S14.6.7.1.6 Air flow uniformity.
S8.7(e)	Table XXIII Humidity test—procedure(e)	S14.6.7.1.7 Air flow procedure.
S8.7(f)	Table XXIII Humidity test—procedure(f)	S14.6.7.1.8 Inspection.
S8.8 Vibration	Table XXIII Vibration test	S14.6.8 Vibration test.
S8.8 Vibration	Table XXIII Vibration test—procedure	S14.6.8.2 Procedure.
S8.9 Sealing	Table XXIII Sealing test	S14.6.9 Sealing test.
S8.9 Sealing	Table XXIII Sealing test—procedure	S14.6.9.1 Procedure.
S8.9 Sealing	Table XXIII Sealing test—procedure	S14.6.9.1.1 Immersion.
S8.9 Sealing	Table XXIII Sealing test—procedure	S14.6.9.1.2 Pressurized immersion.
S8.9 Sealing	Table XXIII Sealing test—procedure	S14.6.9.1.3 Cycle.
S8.9 Sealing	Table XXIII Sealing test—procedure	S14.6.9.1.4 Inspection.
S8.9 Sealing	Table XXIII Sealing test—performance requirements.	S14.6.9.2 Performance requirements.
S8.10 Chemical and corrosion resistance of reflectors of replaceable lens headlamps.	Table XXIII Chemical resistance of reflectors of replaceable lens headlamps test.	S14.6.10 Chemical resistance of reflectors of replaceable lens headlamps test.
S8.10 Chemical and corrosion resistance of reflectors of replaceable lens headlamps.	Table XXIII Corrosion resistance of reflectors of replaceable lens headlamps test.	S14.6.11 Corrosion resistance of reflectors of replaceable lens headlamps test.
S8.10.1 Chemical resistance	Table XXIII Chemical resistance of reflectors of replaceable lens headlamps test—procedure.	S14.6.10.1 Procedure.
S8.10.1(a)	Table XXIII Chemical resistance of reflectors of replaceable lens headlamps test—procedure.	S14.6.10.1.2 Fluid application.
S8.10.1(b)	Table XXIII Chemical resistance of reflectors of replaceable lens headlamps test—procedure.	S14.6.10.1.1 Test fluids.
S8.10.1(c)	Table XXIII Chemical resistance of reflectors of replaceable lens headlamps test—procedure.	S14.6.10.1.3 Test duration.
S8.10.2 Corrosion	Table XXIII Corrosion resistance of reflectors of replaceable lens headlamps test—procedure.	S14.6.11.1 Procedure.
S8.10.2(a)	Table XXIII Corrosion resistance of reflectors of replaceable lens headlamps test—procedure.	S14.6.11.1.1 Salt spray.
S8.10.2(b)	Table XXIII Corrosion resistance of reflectors of replaceable lens headlamps test—procedure.	S14.6.11.1.2 Drying and cleaning.
S9 Deflection test for replaceable light sources	Table XXIII Deflection test for replaceable light sources.	S14.7.1 Deflection test for replaceable light sources.
S9 Deflection test for replaceable light sources	Table XXIII Deflection test for replaceable light sources—procedure.	S14.7.1.1 Procedure.
S9 Deflection test for replaceable light sources	Table XXIII Deflection test for replaceable light sources—procedure.	S14.7.1.1.1 Force application.
S9 Deflection test for replaceable light sources	Table XXIII Deflection test for replaceable light sources—procedure.	S14.7.1.1.2 Application sequence.
S9 Deflection test for replaceable light sources	Table XXIII Deflection test for replaceable light sources—procedure.	S14.7.1.1.3 Measurement.
S10(a)	S6.8.5.6 Headlamp photometry measurements.	S14.2.5.3 Measurement distance.
S10(a)	S6.8.5.6.2(g) Aiming—Simultaneous aim	S14.2.5.5.7 Simultaneous aim Type F sealed beam headlamps and beam contributor integral beam headlamps.
S10(b)	S6.8.5.6 Headlamp photometry measurements.	S14.2.5.3 Measurement distance.
S10(b)	S6.8.5.6.2(g) Aiming—Simultaneous aim	S14.2.5.5.7 Simultaneous aim Type F sealed beam headlamps and beam contributor integral beam headlamps.
S11 Photometric Test	S6.8.5.5 Daytime running lamp (DRL) photometry measurements.	S14.2.4.1.
S11 Photometric Test	S6.8.5.5 Daytime running lamp (DRL) photometry measurements.	S14.2.4.2.
S12 Headlamp concealment devices	S16 Headlamp concealment device requirements.	S12 Headlamp concealment device requirements.

APPENDIX A.—FMVSS NO. 108 REWRITE CROSS REFERENCE—Continued

Current FMVSS No. 108 or incorporated document citation	FMVSS No. 108 rewrite NPRM citation	FMVSS No. 108 rewrite final rule citation
S12.1	S16.1 Power loss during headlamp use	S12.1 Power loss during headlamp use.
S12.2	S16.2 Manual device actuation	S12.2 Manual device actuation.
S12.3	S16.3 Single step actuation	S12.3 Single step actuation.
S12.4	S16.4 Headlamp aiming and replacement	S12.4 Headlamp aiming and replacement.
S12.5	S16.5 Operational temperature range and time limitation.	S12.5 Operational temperature range and time limitation.
S12.6	S16.6 ECE compliance alternative	S12.6 ECE compliance alternative.
S12.7 Certification election	S16.7 Certification election	S12.7 Certification election.
Figure 1a	S7.2.1 Photometry	S7.2.13 Photometry.
Figure 1a	S7.8.1 Photometry	S7.8.13 Photometry.
Figure 1a	Table VIII Taillamp—Individual point photometry.	Table VIII Taillamp—Individual point photometry.
Figure 1a	Table VIII Taillamp—Zone photometry	Table VIII Taillamp—Group photometry.
Figure 1a	Table XIV Parking lamp—Individual point photometry.	Table XIV Parking lamp—Individual point photometry.
Figure 1a	Table XIV Parking lamp—Zone photometry	Table XIV Parking lamp—Group photometry.
Figure 1b	S7.2.1 Photometry	S7.2.13 Photometry.
Figure 1b	S7.8.1 Photometry	S7.8.13 Photometry.
Figure 1b	Table VIII Taillamp—Individual point photometry.	Table VIII Taillamp—Individual point photometry.
Figure 1b	Table VIII Taillamp—Zone photometry	Table VIII Taillamp—Group photometry.
Figure 1b	Table XIV Parking lamp—Individual point photometry.	Table XIV Parking lamp—Individual point photometry.
Figure 1b	Table XIV Parking lamp—Zone photometry	Table XIV Parking lamp—Group photometry.
Figure 1b, footnote 1	Table VIII Taillamp—Maximum photometric intensity.	Table VIII Taillamp—Maximum photometric intensity.
Figure 1b, footnote 2	Table XIV Parking lamp—Maximum photometric intensity.	Table XIV Parking lamp—Maximum photometric intensity.
Figure 1c	S7.2.1 Photometry	S7.2.13 Photometry.
Figure 1c	S7.8.1 Photometry	S7.8.13 Photometry.
Figure 1c	Table VIII Taillamp—Individual point photometry.	Table VIII Taillamp—Individual point photometry.
Figure 1c	Table VIII Taillamp—Zone photometry	Table VIII Taillamp—Group photometry.
Figure 1c	Table XIV Parking lamp—Individual point photometry.	Table XIV Parking lamp—Individual point photometry.
Figure 1c	Table XIV Parking lamp—Zone photometry	Table XIV Parking lamp—Group photometry.
Figure 2	S7.6.1 Photometry	S7.6.13 Photometry.
Figure 2, footnote 1	Table XII footnote 2	Table XII footnote 2.
Figure 2, footnote 1	Table XII footnote 3	Table XII footnote 3.
Figure 2, footnote 1	Table XII Single backup lamp system—Zone photometry.	Table XII Single lamp system—Group photometry.
Figure 2, footnote 1	Table XII Two backup lamp system—Zone photometry.	Table XII Two lamp system—Each lamp—Group photometry.
Figure 4–1	Figure 3	Figure 3.
Figure 4–2	Figure 3	Figure 3.
Figure 4–3	Figure 3	Figure 3.
Figure 4–4	Figure 3	Figure 3.
Figure 5	Figure 5	Figure 5.
Figure 6	Figure 6	Figure 6.
Figure 7	Figure 7	Figure 7.
Figure 8	Figure 8	Figure 8.
Figure 9	Figure 9	Figure 9.
Figure 10	S7.9.3 Photometry	S7.9.13 Photometry.
Figure 10	Table XV High mounted stop lamp—Individual point photometry.	Table XV High mounted stop lamp—Individual point photometry.
Figure 10	Table XV High mounted stop lamp—Zone photometry.	Table XV High mounted stop lamp—Group photometry.
Figure 10, footnote 1	Table XV footnote 4	Table XV footnote 4.
Figure 10, footnote 2	Table XV footnote 2	Table XV footnote 2.
Figure 11	Relocated to Part 564, Appendix C	Relocated to Part 564, Appendix C.
Figure 12	Relocated to Part 564, Appendix C	Relocated to Part 564, Appendix C.
Figure 13	Relocated to Part 564, Appendix C	Relocated to Part 564, Appendix C.
Figure 14	Relocated to Part 564, Appendix C	Relocated to Part 564, Appendix C.
Figure 15–1	Table XIX Lower beam #1M photometry	Table XIX–a Lower beam #1M photometry.
Figure 15–1	Table XIX Lower beam #5M photometry	Table XIX–b Lower beam #5M photometry.
Figure 15–1	Table XVIII Upper beam #6 photometry	Table XVIII Upper beam #6 photometry.
Figure 15–1	Table XVIII Upper beam #1 photometry	Table XVIII Upper beam #1 photometry.
Figure 15–2	Table XIX Lower beam #1V photometry	Table XIX–a Lower beam #1V photometry.
Figure 15–2	Table XVIII Upper beam #1 photometry	Table XVIII Upper beam #1 photometry.
Figure 15–2	Table XVIII Upper beam #6 photometry	Table XVIII Upper beam #6 photometry.
Figure 15–2	Table XIX Lower beam #4V photometry	Table XIX–c Lower beam #4V photometry.

APPENDIX A.—FMVSS NO. 108 REWRITE CROSS REFERENCE—Continued

Current FMVSS No. 108 or incorporated document citation	FMVSS No. 108 rewrite NPRM citation	FMVSS No. 108 rewrite final rule citation
Figure 16	Figure 14	Figure 14.
Figure 17–1	Table XIX Lower beam #2M photometry	Table XIX–a Lower beam #2M photometry.
Figure 17–1	Table XVIII Upper beam #2 photometry	Table XVIII Upper beam #2 photometry.
Figure 17–2	Table XIX Lower beam #2V photometry	Table XIX–a Lower beam #2V photometry.
Figure 17–2	Table XVIII Upper beam #2 photometry	Table XVIII Upper beam #2 photometry.
Figure 18	Relocated to Part 564, Appendix C	Relocated to Part 564, Appendix C.
Figure 19	Table V Lens area visibility	Table V–c Lens area visibility.
Figure 19, footnote 2	Table V footnote 3	Table V footnote 3.
Figure 20	Table V Luminous intensity visibility	Table V–d Luminous intensity visibility.
Figure 20, footnote 2	Table V footnote 4	Table V footnote 4.
Figure 21	Relocated to Part 564, Appendix C	Relocated to Part 564, Appendix C.
Figure 22	Figure 15	Figure 15.
Figure 25	Figure 10	Figure 10.
Figure 26	Table II Replaceable bulb headlamps—2 lamp system—with HB2.	Table II–d Replaceable bulb headlamps—2 lamp system—with HB2.
Figure 26	Table II Replaceable bulb headlamps—2 lamp system—without HB2.	Table II–d Replaceable bulb headlamps—2 lamp system—without HB2.
Figure 26	Table II Replaceable bulb headlamps—4 lamp system—with HB2.	Table II–d Replaceable bulb headlamps—4 lamp system—with HB2.
Figure 26	Table II Replaceable bulb headlamps—4 lamp system—without HB2.	Table II–d Replaceable bulb headlamps—4 lamp system—without HB2.
Figure 27–1	Table XIX Lower beam #3M photometry	Table XIX–b Lower beam #3M photometry.
Figure 27–1	Table XVIII Upper beam #3 photometry	Table XVIII Upper beam #3 photometry.
Figure 27–2	Table XIX Lower beam #3V photometry	Table XIX–b Lower beam #3V photometry.
Figure 27–2	Table XVIII Upper beam #3 photometry	Table XVIII Upper beam #3 photometry.
Figure 28–1, Types 1A1, 1C1, and 1G1	Table XVIII Upper beam #4 photometry	Table XVIII Upper beam #4 photometry.
Figure 28–1, Types 2A1, 2C1, and 2G1	Table XVIII Upper beam #5 photometry	Table XVIII Upper beam #5 photometry.
Figure 28–2, Types 1A1, 1C1, and 1G1	Table XVIII Upper beam #4 photometry	Table XVIII Upper beam #4 photometry.
Figure 28–2, Types 2A1, 2C1 and 2G1	Table XIX Lower beam #2V photometry	Table XIX–a Lower beam #2V photometry.
Figure 28–2, Types 2A1, 2C1, and 2G1	Table XIX Lower beam #4M photometry	Table XIX–b Lower beam #4M photometry.
Figure 28–2, Types 2A1, 2C1, and 2G1	Table XVIII Upper beam #5 photometry	Table XVIII Upper beam #5 photometry.
Figure 29	S7.12.1.2 Photometry	S8.2.1.7 Photometry.
Figure 29	Table XVI Red C2 sheeting photometry	Table XVI–c Red C2 sheeting photometry.
Figure 29	Table XVI Red C3 sheeting photometry	Table XVI–c Red C3 sheeting photometry.
Figure 29	Table XVI Red C4 sheeting photometry	Table XVI–c Red C4 sheeting photometry.
Figure 29	Table XVI White C2 sheeting photometry	Table XVI–c White C2 sheeting photometry.
Figure 29	Table XVI White C3 sheeting photometry	Table XVI–c White C3 sheeting photometry.
Figure 29	Table XVI White C4 sheeting photometry	Table XVI–c White C4 sheeting photometry.
Figure 30–1	Figure 11	Figure 11.
Figure 30–2	Figure 11	Figure 11.
Figure 30–3	Figure 11	Figure 11.
Figure 30–4	Figure 11	Figure 11.
Figure 31	Figure 13	Figure 13.
Figure 32	Table XX Motor driven cycle photometry	Table XX Motor driven cycle photometry.
Figure 32	Table XX Motor driven cycle with single lamp photometry.	Table XX Motor driven cycle with single lamp photometry.
Figure 32	Table XX Motorcycle photometry	Table XX Motorcycle photometry.
Table I	S1 Scope	S1 Scope.
Table I	S6.1 Required lamps, reflective devices, and associated equipment by vehicle type.	S6.1 Required lamps, reflective devices, and associated equipment by vehicle type.
Table I	S6.1.1 Quantity	S6.1.1 Quantity.
Table I	S6.1.2 Color	S6.1.2 Color.
Table I	S6.6 Associated equipment	S6.6.1 All except trailers.
Table I	S6.6 Associated equipment	S6.6.2 All except trailers and motorcycles.
Table I	S7.14 Associated equipment	S9 Associated equipment requirements.
Table I	Table I Lighting device	Table I–a Lighting device.
Table I	Table I Lighting device	Table I–b Lighting device.
Table I	Table I Mounting height	Table I–a Mounting height.
Table I	Table I Mounting height	Table I–b Mounting height.
Table I	Table I Mounting location	Table I–a Mounting location.
Table I	Table I Mounting location	Table I–b Mounting location.
Table I	Table I Number and color	Table I–a Number and color.
Table I	Table I Number and color	Table I–b Number and color.
Table II	S6.1 Required lamps, reflective devices, and associated equipment by vehicle type.	S6.1 Required lamps, reflective devices, and associated equipment by vehicle type.
Table II	S6.1.1 Quantity	S6.1.1 Quantity.
Table II	S6.1.2 Color	S6.1.2 Color.
Table II	S6.1.3 Mounting location and height	S6.1.3.1.
Table II	S6.1.3 Mounting location and height	S6.1.3.2.
Table II	Table I Lighting device	Table I–a Lighting device.
Table II	Table I Lighting device	Table I–b Lighting device.

APPENDIX A.—FMVSS NO. 108 REWRITE CROSS REFERENCE—Continued

Current FMVSS No. 108 or incorporated document citation	FMVSS No. 108 rewrite NPRM citation	FMVSS No. 108 rewrite final rule citation
Table II	Table I Mounting height	Table I–a Mounting height.
Table II	Table I Mounting height	Table I–b Mounting height.
Table II	Table I Mounting location	Table I–a Mounting location.
Table II	Table I Mounting location	Table I–b Mounting location.
Table II	Table I Number and color	Table I–a Number and color.
Table II	Table I Number and color	Table I–b Number and color.
Table II heading	S6.1.3.1 Mounting height	S6.1.4 Mounting height.
Table III	S1 Scope	S1 Scope.
Table III	S6.1 Required lamps, reflective devices, and associated equipment by vehicle type.	S6.1 Required lamps, reflective devices, and associated equipment by vehicle type.
Table III	S6.1.1 Quantity	S6.1.1 Quantity.
Table III	S6.1.2 Color	S6.1.2 Color.
Table III	S6.6 Associated equipment	S6.6.1 All except trailers.
Table III	S6.6 Associated equipment	S6.6.2 All except trailers and motorcycles.
Table III	S7.14 Associated equipment	S9 Associated equipment requirements.
Table III	Table I Lighting device	Table I–a Lighting device.
Table III	Table I Lighting device	Table I–b Lighting device.
Table III	Table I Lighting device	Table I–c Lighting device.
Table III	Table I Mounting height	Table I–a Mounting height.
Table III	Table I Mounting height	Table I–b Mounting height.
Table III	Table I Mounting height	Table I–c Mounting height.
Table III	Table I Mounting location	Table I–a Mounting location.
Table III	Table I Mounting location	Table I–b Mounting location.
Table III	Table I Mounting location	Table I–c Mounting location.
Table III	Table I Number and color	Table I–a Number and color.
Table III	Table I Number and color	Table I–b Number and color.
Table III	Table I Number and color	Table I–c Number and color.
Table IV	S6.1 Required lamps, reflective devices, and associated equipment by vehicle type.	S6.1 Required lamps, reflective devices, and associated equipment by vehicle type.
Table IV	S6.1.1 Quantity	S6.1.1 Quantity.
Table IV	S6.1.2 Color	S6.1.2 Color.
Table IV	S6.1.3 Mounting location and height	S6.1.3.1.
Table IV	S6.1.3 Mounting location and height	S6.1.3.2.
Table IV	Table I Lighting device	Table I–a Lighting device.
Table IV	Table I Lighting device	Table I–b Lighting device.
Table IV	Table I Lighting device	Table I–c Lighting device.
Table IV	Table I Mounting height	Table I–a Mounting height.
Table IV	Table I Mounting height	Table I–b Mounting height.
Table IV	Table I Mounting height	Table I–c Mounting height.
Table IV	Table I Mounting location	Table I–a Mounting location.
Table IV	Table I Mounting location	Table I–b Mounting location.
Table IV	Table I Mounting location	Table I–c Mounting location.
Table IV	Table I Number and color	Table I–a Number and color.
Table IV	Table I Number and color	Table I–b Number and color.
Table IV	Table I Number and color	Table I–c Number and color.
Table IV, footnotes 2 and 3	Omitted	S14.2.1.6.2 Socket exemption.
Table IV heading	S6.1.3.1 Mounting height	S6.1.4 Mounting height.
Table IV, footnote 1	S4 Definitions—Overall width	S4 Definitions—Overall width.
SAE device documents for photometry distance	S6.8.5.1 Photometry ex headlamp, license lamp, & DRL.	S14.2.1.3 Measurement distance.
SAE device documents referencing SAE J575	S6.8.1 Physical test requirements	S14.1.1 Physical test requirements.
SAE device documents referencing SAE J575	S6.8.5 Photometric tests	S14.2 Photometric test procedures.
SAE J186a, Sep 1977, 2.1	S4 Definitions—High mounted stop lamp	S4 Definitions—High mounted stop lamp.
SAE J186a, Sep 1977, 3	S7.9.4 Physical tests	S7.9.14 Physical tests.
SAE J186a, Sep 1977, 3	S7.9.4 Physical tests	S7.9.14.1 External mount.
SAE J186a, Sep 1977, 3	S7.9.4 Physical tests	S7.9.14.2 Internal mount.
SAE J222, Dec 1970, 2	S4 Definitions—Parking lamps	S4 Definitions—Parking lamps.
SAE J222, Dec 1970, 3	S7.8.2 Physical tests	S7.8.14 Physical tests.
SAE J387, Nov 1987	S4 Definitions—Optically combined	S4 Definitions—Optically combined.
SAE J564a, Apr 1964	S7.14.4 Headlamp beam switching device	S9.4 Headlamp beam switching device.
SAE J564a, Apr 1964	S7.14.5.1 Indicator size and location	S9.5.1 Indicator size, location, and color.
SAE J565b, Feb 1969	S7.14.4.1 Semi-automatic headlamp beam switching device.	S9.4.1 Semi-automatic headlamp beam switching device.
SAE J565b, Feb 1969	Table XXI	S9.4.1.7 Physical tests.
SAE J565b, Feb 1969	Table XXI Semiautomatic headlamp beam switching device tests.	S14.9.3.11 Semiautomatic headlamp beam switching device tests.
SAE J565b, Feb 1969, 1	S4 Definitions—Semiautomatic headlamp beam switching device.	S4 Definitions—Semiautomatic headlamp beam switching device.
SAE J565b, Feb 1969, 2	S7.14.4.1.1 Operating instructions	S9.4.1.1 Operating instructions.
SAE J565b, Feb 1969, 4	Table XXI Semiautomatic headlamp beam switching device sensitivity test.	S14.9.3.11.2 Sensitivity test.

APPENDIX A.—FMVSS NO. 108 REWRITE CROSS REFERENCE—Continued

Current FMVSS No. 108 or incorporated document citation	FMVSS No. 108 rewrite NPRM citation	FMVSS No. 108 rewrite final rule citation
SAE J565b, Feb 1969, 4.1	Table XXI Semiautomatic headlamp beam switching device sensitivity test—procedure.	S14.9.3.11.2.1 Samples.
SAE J565b, Feb 1969, 4.2	Table XXI Semiautomatic headlamp beam switching device sensitivity test—performance requirements.	S14.9.3.11.2.3 Performance requirements.
SAE J565b, Feb 1969, 4.2	Table XXI Semiautomatic headlamp beam switching device sensitivity test—performance requirements.	S14.9.3.11.2.3.1 Operating limits.
SAE J565b, Feb 1969, 4.2	Table XXI Semiautomatic headlamp beam switching device sensitivity test—performance requirements.	S14.9.3.11.2.3.2 Sensitivity voids.
SAE J565b, Feb 1969, 4.2	Table XXI Semiautomatic headlamp beam switching device sensitivity test—procedure.	S14.9.3.11.2.2 Procedure.
SAE J565b, Feb 1969, 4.2	Table XXI Semiautomatic headlamp beam switching device sensitivity test—procedure.	S14.9.3.11.2.2.1 Adjustment.
SAE J565b, Feb 1969, 4.2	Table XXI Semiautomatic headlamp beam switching device sensitivity test—procedure.	S14.9.3.11.2.2.2 Switching.
SAE J565b, Feb 1969, 4.2	Table XXI Semiautomatic headlamp beam switching device sensitivity test—procedure.	S14.9.3.11.2.2.3 Sensitivity curves.
SAE J565b, Feb 1969, 4.2	Table XXI Semiautomatic headlamp beam switching device tests—applicable item.	S14.9.3.11.1 Test conditions.
SAE J565b, Feb 1969, 4.3	Table XXI Semiautomatic headlamp beam switching device voltage regulation test.	S14.9.3.11.3 Voltage regulation test.
SAE J565b, Feb 1969, 4.3	Table XXI Semiautomatic headlamp beam switching device voltage regulation test—performance requirements.	S14.9.3.11.3.2 Performance requirements.
SAE J565b, Feb 1969, 4.3	Table XXI Semiautomatic headlamp beam switching device voltage regulation test—procedure.	S14.9.3.11.3.1 Procedure.
SAE J565b, Feb 1969, 4.3	Table XXI Semiautomatic headlamp beam switching device voltage regulation test—procedure.	S14.9.3.11.3.1.1 Adjustment.
SAE J565b, Feb 1969, 4.3	Table XXI Semiautomatic headlamp beam switching device voltage regulation test—procedure.	S14.9.3.11.3.1.2 Measurement.
SAE J565b, Feb 1969, 4.4	S7.14.4.1.2 Manual override	S9.4.1.2 Manual override.
SAE J565b, Feb 1969, 4.4	Table XXI Semiautomatic headlamp beam switching device manual override test.	S14.9.3.11.4 Manual override test.
SAE J565b, Feb 1969, 4.4	Table XXI Semiautomatic headlamp beam switching device manual override test—performance requirements.	S14.9.3.11.4.2 Performance requirements.
SAE J565b, Feb 1969, 4.4	Table XXI Semiautomatic headlamp beam switching device manual override test—procedure.	S14.9.3.11.4.1 Procedure.
SAE J565b, Feb 1969, 4.4	Table XXI Semiautomatic headlamp beam switching device manual override test—procedure.	S14.9.3.11.4.1.1 Adjustment.
SAE J565b, Feb 1969, 4.4	Table XXI Semiautomatic headlamp beam switching device manual override test—procedure.	S14.9.3.11.4.1.2 Exposure.
SAE J565b, Feb 1969, 4.4	Table XXI Semiautomatic headlamp beam switching device manual override test—procedure.	S14.9.3.11.4.1.3 Override.
SAE J565b, Feb 1969, 4.4	Table XXI Semiautomatic headlamp beam switching device manual override test—procedure.	S14.9.3.11.4.1.4 Switch to upper beam.
SAE J565b, Feb 1969, 4.4	Table XXI Semiautomatic headlamp beam switching device manual override test—procedure.	S14.9.3.11.4.1.5 Switch to lower beam.
SAE J565b, Feb 1969, 4.5	Table XXI Semiautomatic headlamp beam switching device warmup test.	S14.9.3.11.5 Warmup test.
SAE J565b, Feb 1969, 4.5	Table XXI Semiautomatic headlamp beam switching device warmup test—performance requirements.	S14.9.3.11.5.2 Performance requirements.
SAE J565b, Feb 1969, 4.5	Table XXI Semiautomatic headlamp beam switching device warmup test—procedure.	S14.9.3.11.5.1 Procedure.
SAE J565b, Feb 1969, 4.5	Table XXI Semiautomatic headlamp beam switching device warmup test—procedure.	S14.9.3.11.5.1.1 Adjustment.
SAE J565b, Feb 1969, 4.5	Table XXI Semiautomatic headlamp beam switching device warmup test—procedure.	S14.9.3.11.5.1.2 Measurement.
SAE J565b, Feb 1969, 4.6	S7.14.4.1.3 Fail safe operation	S9.4.1.3 Fail safe operation.

APPENDIX A.—FMVSS NO. 108 REWRITE CROSS REFERENCE—Continued

Current FMVSS No. 108 or incorporated document citation	FMVSS No. 108 rewrite NPRM citation	FMVSS No. 108 rewrite final rule citation
SAE J565b, Feb 1969, 4.7	Table XXI Semiautomatic headlamp beam switching device temperature test.	S14.9.3.11.6 Temperature test.
SAE J565b, Feb 1969, 4.7	Table XXI Semiautomatic headlamp beam switching device temperature test—performance requirements.	S14.9.3.11.6.2 Performance requirements.
SAE J565b, Feb 1969, 4.7	Table XXI Semiautomatic headlamp beam switching device temperature test—procedure.	S14.9.3.11.6.1 Procedure.
SAE J565b, Feb 1969, 4.7	Table XXI Semiautomatic headlamp beam switching device temperature test—procedure.	S14.9.3.11.6.1.1 Exposure.
SAE J565b, Feb 1969, 4.7	Table XXI Semiautomatic headlamp beam switching device temperature test—procedure.	S14.9.3.11.6.1.2 Temperature.
SAE J565b, Feb 1969, 4.7	Table XXI Semiautomatic headlamp beam switching device temperature test—procedure.	S14.9.3.11.6.1.3 Measurement.
SAE J565b, Feb 1969, 4.8	Table XXI Semiautomatic headlamp beam switching device dust test.	S14.9.3.11.7 Dust test.
SAE J565b, Feb 1969, 4.8	Table XXI Semiautomatic headlamp beam switching device dust test—performance requirements.	S14.9.3.11.7.2 Performance requirements.
SAE J565b, Feb 1969, 4.8	Table XXI Semiautomatic headlamp beam switching device dust test—procedure.	S14.9.3.11.7.1 Procedure.
SAE J565b, Feb 1969, 4.8	Table XXI Semiautomatic headlamp beam switching device dust test—procedure.	S14.9.3.11.7.1.1 Sensitivity.
SAE J565b, Feb 1969, 4.8	Table XXI Semiautomatic headlamp beam switching device dust test—procedure.	S14.9.3.11.7.1.2 Dust exposure.
SAE J565b, Feb 1969, 4.8	Table XXI Semiautomatic headlamp beam switching device dust test—procedure.	S14.9.3.11.7.1.3 Measurement.
SAE J565b, Feb 1969, 4.9	Table XXI Semiautomatic headlamp beam switching device corrosion test.	S14.9.3.11.8 Corrosion test.
SAE J565b, Feb 1969, 4.9	Table XXI Semiautomatic headlamp beam switching device corrosion test—performance requirements.	S14.9.3.11.8.2 Performance requirements.
SAE J565b, Feb 1969, 4.9	Table XXI Semiautomatic headlamp beam switching device corrosion test—procedure.	S14.9.3.11.8.1 Procedure.
SAE J565b, Feb 1969, 4.9	Table XXI Semiautomatic headlamp beam switching device corrosion test—procedure.	S14.9.3.11.8.1.1 Sensitivity.
SAE J565b, Feb 1969, 4.9	Table XXI Semiautomatic headlamp beam switching device corrosion test—procedure.	S14.9.3.11.8.1.2 Applicability.
SAE J565b, Feb 1969, 4.9	Table XXI Semiautomatic headlamp beam switching device corrosion test—procedure.	S14.9.3.11.8.1.3 Sockets.
SAE J565b, Feb 1969, 4.9	Table XXI Semiautomatic headlamp beam switching device corrosion test—procedure.	S14.9.3.11.8.1.4 Measurement.
SAE J565b, Feb 1969, 4.10	Table XXI Semiautomatic headlamp beam switching device vibration test.	S14.9.3.11.9 Vibration test.
SAE J565b, Feb 1969, 4.10	Table XXI Semiautomatic headlamp beam switching device vibration test—performance requirements.	S14.9.3.11.9.2 Performance requirements.
SAE J565b, Feb 1969, 4.10	Table XXI Semiautomatic headlamp beam switching device vibration test—performance requirements.	S14.9.3.11.9.2.1 Beam switching.
SAE J565b, Feb 1969, 4.10	Table XXI Semiautomatic headlamp beam switching device vibration test—performance requirements.	S14.9.3.11.9.2.2 Mechanical aim.
SAE J565b, Feb 1969, 4.10	Table XXI Semiautomatic headlamp beam switching device vibration test—procedure.	S14.9.3.11.9.1 Procedure.
SAE J565b, Feb 1969, 4.10	Table XXI Semiautomatic headlamp beam switching device vibration test—procedure.	S14.9.3.11.9.1.1 Sensitivity.
SAE J565b, Feb 1969, 4.10	Table XXI Semiautomatic headlamp beam switching device vibration test—procedure.	S14.9.3.11.9.1.5 Measurement.
SAE J565b, Feb 1969, 4.10(a)	Table XXI Semiautomatic headlamp beam switching device vibration test—procedure.	S14.9.3.11.9.1.2 Acceleration.
SAE J565b, Feb 1969, 4.10(b)	Table XXI Semiautomatic headlamp beam switching device vibration test—procedure.	S14.9.3.11.9.1.3 Frequency.
SAE J565b, Feb 1969, 4.10(c)	Table XXI Semiautomatic headlamp beam switching device vibration test—procedure.	S14.9.3.11.9.1.4 Operation.
SAE J565b, Feb 1969, 4.11	Table XXI Semiautomatic headlamp beam switching device sunlight test.	S14.9.3.11.10 Sunlight test.

APPENDIX A.—FMVSS NO. 108 REWRITE CROSS REFERENCE—Continued

Current FMVSS No. 108 or incorporated document citation	FMVSS No. 108 rewrite NPRM citation	FMVSS No. 108 rewrite final rule citation
SAE J565b, Feb 1969, 4.11	Table XXI Semiautomatic headlamp beam switching device sunlight test—performance requirements.	S14.9.3.11.10.2 Performance requirements.
SAE J565b, Feb 1969, 4.11	Table XXI Semiautomatic headlamp beam switching device sunlight test—procedure.	S14.9.3.11.10.1 Procedure.
SAE J565b, Feb 1969, 4.11	Table XXI Semiautomatic headlamp beam switching device sunlight test—procedure.	S14.9.3.11.10.1.1 Exposure.
SAE J565b, Feb 1969, 4.11	Table XXI Semiautomatic headlamp beam switching device sunlight test—procedure.	S14.9.3.11.10.1.2 Rest.
SAE J565b, Feb 1969, 4.12	Table XXI Semiautomatic headlamp beam switching device durability test.	S14.9.3.11.11 Durability test.
SAE J565b, Feb 1969, 4.12	Table XXI Semiautomatic headlamp beam switching device durability test—performance requirements.	S14.9.3.11.11.2 Performance requirements.
SAE J565b, Feb 1969, 4.12	Table XXI Semiautomatic headlamp beam switching device durability test—procedure.	S14.9.3.11.11.1 Procedure.
SAE J565b, Feb 1969, 4.12	Table XXI Semiautomatic headlamp beam switching device durability test—procedure.	S14.9.3.11.11.1.1 Sensitivity.
SAE J565b, Feb 1969, 4.12	Table XXI Semiautomatic headlamp beam switching device durability test—procedure.	S14.9.3.11.11.1.3 Measurement.
SAE J565b, Feb 1969, 4.12(a)	Table XXI Semiautomatic headlamp beam switching device durability test—procedure.	S14.9.3.11.11.1.2 Cycle.
SAE J565b, Feb 1969, 4.12(b)	Table XXI Semiautomatic headlamp beam switching device durability test—procedure.	S14.9.3.11.11.1.2 Cycle.
SAE J565b, Feb 1969, 4.13	S7.14.4.1.4 Automatic dimming indicator	S9.4.1.4 Automatic dimming indicator.
SAE J565b, Feb 1969, 4.15	Table XXI Semiautomatic headlamp beam switching device return to upper beam test.	S14.9.3.11.12 Return to upper beam test.
SAE J565b, Feb 1969, 4.15	Table XXI Semiautomatic headlamp beam switching device return to upper beam test—performance requirements.	S14.9.3.11.12.2 Performance requirements.
SAE J565b, Feb 1969, 4.15	Table XXI Semiautomatic headlamp beam switching device return to upper beam test—procedure.	S14.9.3.11.12.1 Procedure.
SAE J565b, Feb 1969, 4.15	Table XXI Semiautomatic headlamp beam switching device return to upper beam test—procedure.	S14.9.3.11.12.1.1 Sensitivity.
SAE J565b, Feb 1969, 4.15	Table XXI Semiautomatic headlamp beam switching device return to upper beam test—procedure.	S14.9.3.11.12.1.2 Exposure.
SAE J565b, Feb 1969, 4.16	S7.14.4.1.5 Lens accessibility	S9.4.1.5 Lens accessibility.
SAE J565b, Feb 1969, 4.17	S7.14.4.1.6 Mounting height	S9.4.1.6 Mounting height.
SAE J566, Jan 1960, 1	S8.1.5 Headlamp adjustments	S10.18.1.1 Adjustments.
SAE J566, Jan 1960, 2	S8.1.5 Headlamp adjustments	S10.18.1.2 Procedure & security.
SAE J566, Jan 1960, 3	S8.1.5 Headlamp adjustments	S10.18.1.2 Procedure & security.
SAE J575, Dec 1988, 2.1	S6.8.2 Samples for test	S14.1.4.2 Mounting bracket.
SAE J575, Dec 1988, 2.3	S6.8.2 [fourth sentence]	S14.6.8.1 Samples.
SAE J575, Dec 1988, 2.3	S6.8.2 Samples for test	S14.1.4.2 Mounting bracket.
SAE J575, Dec 1988, 3	S6.8.3 Laboratory facilities	S14.1.5 Laboratory facilities.
SAE J575, Dec 1988, 4.1	Table XXIII Vibration test—procedure	S14.6.8.2 Procedure.
SAE J575, Dec 1988, 4.4	Table XXIII Corrosion test—performance requirements.	S14.6.3.2 Performance requirements.
SAE J575, Dec 1988, 4.4	Table XXIII Corrosion test—procedure	S14.6.3.1 Procedure.
SAE J575, Dec 1988, 4.4	Table XXIII VHAD corrosion test—performance requirements.	S14.8.6.2 Performance requirements.
SAE J575, Dec 1988, 4.4	Table XXIII VHAD corrosion test—procedure	S14.8.6.1 Procedure.
SAE J575, Dec 1988, 4.6.2.1	S6.8.5.6.3 Positioner	S14.2.5.6 Positioner.
SAE J575, Dec 1988, 4.6.2.2	S6.8.5.6.4 Photometer	S14.2.5.7.1 Range.
SAE J575, Dec 1988, 4.6.2.3	S6.8.5.6.4 Photometer	S14.2.5.7.2 Sensor.
SAE J575, Dec 1988, 4.6.2.3.1	S6.8.5.6.4 Photometer	S14.2.5.7.2.1 Effective area.
SAE J575, Dec 1988, 4.6.2.3.1	S6.8.5.6.4 Photometer	S14.2.5.7.2.2 Intercepted light.
SAE J575, Dec 1988, 4.6.2.3.1	S6.8.5.6.4 Photometer	S14.2.5.7.2.3 Direct illumination.
SAE J575, Dec 1988, 4.6.2.3.2	S6.8.5.6.4 Photometer	S14.2.5.7.3 Color response.
SAE J575, Dec 1988, 4.6.3	S6.8.5.6 Headlamp photometry measurements.	S14.2.5.1 Mounting.
SAE J575, Dec 1988, 4.6.3.3	S6.8.5.6.5 Location of test points	S14.2.5.8 Location of test points.
SAE J575, Dec 1988, 4.6.3.3	S6.8.5.6.5 Location of test points	S14.2.5.8.1 Nomenclature.
SAE J575, Dec 1988, 4.6.3.3	S6.8.5.6.5 Location of test points	S14.2.5.8.1.1 "H–V".
SAE J575, Dec 1988, 4.6.3.3	S6.8.5.6.5 Location of test points	S14.2.5.8.1.2 "U" "D" "L" "R".
SAE J575, Dec 1988, 4.6.3.3	S6.8.5.6.5 Location of test points	S14.2.5.8.1.3 Angles.
SAE J575, Dec 1988, 4.6.3.4	S6.8.5.6.1 Seasoning and test voltage	S14.2.5.4 Seasoning and test voltage.
SAE J575d, Aug 1967, B	S6.8.2 Samples for test	S14.1.4.3 Second sample set.

APPENDIX A.—FMVSS NO. 108 REWRITE CROSS REFERENCE—Continued

Current FMVSS No. 108 or incorporated document citation	FMVSS No. 108 rewrite NPRM citation	FMVSS No. 108 rewrite final rule citation
SAE J575d, Aug 1967, D	S6.8.3 Laboratory facilities	S14.1.5 Laboratory facilities.
SAE J575d, Aug 1967, E	Table XXII Vibration test	S14.5.1 Vibration test.
SAE J575d, Aug 1967, E	Table XXII Vibration test—performance requirements.	S14.5.1.2 Performance requirements.
SAE J575d, Aug 1967, E	Table XXII Vibration test—procedure	S14.5.1.1 Procedure.
SAE J575d, Aug 1967, F	Table XXII Moisture test	S14.5.2 Moisture test.
SAE J575d, Aug 1967, F	Table XXII Moisture test—performance requirements.	S14.5.2.2 Performance requirements.
SAE J575d, Aug 1967, F	Table XXII Moisture test—procedure	S14.5.2.1 Procedure.
SAE J575d, Aug 1967, G	Table XXII Dust test	S14.5.3 Dust test.
SAE J575d, Aug 1967, G	Table XXII Dust test	S14.5.3.1 Samples.
SAE J575d, Aug 1967, G	Table XXII Dust test—performance requirements.	S14.5.3.2 Procedure (third sentence).
SAE J575d, Aug 1967, G	Table XXII Dust test—performance requirements.	S14.5.3.3 Dust test—performance requirements.
SAE J575d, Aug 1967, G	Table XXII Dust test—procedure	S14.5.3.2 Procedure.
SAE J575d, Aug 1967, H	Table XXII Corrosion test	S14.5.4 Corrosion test.
SAE J575d, Aug 1967, H	Table XXII Corrosion test—performance requirements.	S14.5.4.2 Performance requirements.
SAE J575d, Aug 1967, H	Table XXII Corrosion test—procedure	S14.5.4.1 Procedure.
SAE J575d, Aug 1967, J	S6.8.5.1 Photometry ex headlamp, license lamp, & DRL.	S14.2.1.1 Mounting.
SAE J575d, Aug 1967, J	S6.8.5.1.1 Location of test points	S14.2.1.4 Location of test points.
SAE J575d, Aug 1967, J	Table X footnote 2	Table X footnote 2.
SAE J575d, Aug 1967, J	Table XI footnote 2	Table XI footnote 2.
SAE J575d, Aug 1967, J	Table XII footnote 1	Table XII footnote 1.
SAE J575d, Aug 1967, J	Table XIV footnote 1	Table XIV footnote 1.
SAE J575d, Aug 1967, J	Table XVII footnote 2	Table XVII footnote 2.
SAE J575d, Aug 1967, J	Table XVII Red lamp photometry	Table XVII Red lamp photometry.
SAE J575d, Aug 1967, K	Table XXII Out of focus test	S14.3 Out of focus test.
SAE J575d, Aug 1967, K	Table XXII Out of focus test—performance requirements.	S14.3.2 Performance requirements.
SAE J575d, Aug 1967, K	Table XXII Out of focus test—procedure	S14.3.1 Procedure.
SAE J575e, Aug 1970, B	S6.8.2 Samples for test	S14.1.4.3 Second sample set.
SAE J575e, Aug 1970, D	S6.8.3 Laboratory facilities	S14.1.5 Laboratory facilities.
SAE J575e, Aug 1970, E	Table XXII Vibration test	S14.5.1 Vibration test.
SAE J575e, Aug 1970, E	Table XXII Vibration test—performance requirements.	S14.5.1.2 Performance requirements.
SAE J575e, Aug 1970, E	Table XXII Vibration test—procedure	S14.5.1.1 Procedure.
SAE J575e, Aug 1970, F	Table XXII Moisture test	S14.5.2 Moisture test.
SAE J575e, Aug 1970, F	Table XXII Moisture test—performance requirements.	S14.5.2.2 Performance requirements.
SAE J575e, Aug 1970, F	Table XXII Moisture test—procedure	S14.5.2.1 Procedure.
SAE J575e, Aug 1970, G	Table XXII Dust test	S14.5.3 Dust test.
SAE J575e, Aug 1970, G	Table XXII Dust test	S14.5.3.1 Samples.
SAE J575e, Aug 1970, G	Table XXII Dust test—performance requirements.	S14.5.3.2 Procedure (third sentence).
SAE J575e, Aug 1970, G	Table XXII Dust test—performance requirements.	S14.5.3.3 Dust test—performance requirements.
SAE J575e, Aug 1970, G	Table XXII Dust test—procedure	S14.5.3.2 Procedure.
SAE J575e, Aug 1970, H	Table XXII Corrosion test	S14.5.4 Corrosion test.
SAE J575e, Aug 1970, H	Table XXII Corrosion test—performance requirements.	S14.5.4.2 Performance requirements.
SAE J575e, Aug 1970, H	Table XXII Corrosion test—procedure	S14.5.4.1 Procedure.
SAE J575e, Aug 1970, J	S6.8.5.1 Photometry ex headlamp, license lamp, & DRL.	S14.2.1.1 Mounting.
SAE J575e, Aug 1970, J	S6.8.5.1.1 Location of test points	S14.2.1.4 Location of test points.
SAE J575e, Aug 1970, J	Standard note—new table	Table XIII–a footnote 2.
SAE J575e, Aug 1970, J	Table VI footnote 2	Table VI footnote 2.
SAE J575e, Aug 1970, J	Table VII footnote 2	Table VII footnote 2.
SAE J575e, Aug 1970, J	Table VIII footnote 1	Table VIII footnote 1.
SAE J575e, Aug 1970, J	Table IX footnote 2	Table IX footnote 2.
SAE J575e, Aug 1970, J	Table XV footnote 1	Table XV footnote 1.
SAE J576, Jul 1991, 2.2.1	S4 Definitions—Material [OUT OF ALPHABETICAL ORDER].	S4 Definitions—Material.
SAE J576, Jul 1991, 2.2.1.1	S4 Definitions—Coated materials	S4 Definitions—Coated materials.
SAE J576, Jul 1991, 2.2.2.1	S4 Definitions—Exposed	S4 Definitions—Exposed.
SAE J576, Jul 1991, 2.2.2.2	S4 Definitions—Protected	S4 Definitions—Protected.
SAE J576, Jul 1991, 2.2.3.1	S4 Definitions—Color bleeding	S4 Definitions—Color bleeding.
SAE J576, Jul 1991, 2.2.3.2	S4 Definitions—Crazing	S4 Definitions—Crazing.
SAE J576, Jul 1991, 2.2.3.3	S4 Definitions—Cracking	S4 Definitions—Cracking.

APPENDIX A.—FMVSS NO. 108 REWRITE CROSS REFERENCE—Continued

Current FMVSS No. 108 or incorporated document citation	FMVSS No. 108 rewrite NPRM citation	FMVSS No. 108 rewrite final rule citation
SAE J576, Jul 1991, 2.2.3.4	S4 Definitions—Haze	S4 Definitions—Haze.
SAE J576, Jul 1991, 2.2.3.5	S4 Definitions—Delamination	S4 Definitions—Delamination.
SAE J576, Jul 1991, 3	Table XXII Plastic optical material tests—procedure.	S14.4.2.2.3 Procedure.
SAE J576, Jul 1991, 3.1	Table XXII Plastic optical material tests	S14.4.2.2.2 Material composition.
SAE J576, Jul 1991, 3.2	Table XXII Plastic optical material tests—samples.	S14.4.2.1 Samples.
SAE J576, Jul 1991, 3.2 Note	Table XXII Plastic optical material tests—samples.	S14.4.2.1.5 Control samples.
SAE J576, Jul 1991, 3.2.1	Table XXII Plastic optical material tests—samples.	S14.4.2.1.1 Molded samples.
SAE J576, Jul 1991, 3.2.1	Table XXII Plastic optical material tests—samples.	S14.4.2.1.2 Exposed area.
SAE J576, Jul 1991, 3.2.2	Table XXII Plastic optical material tests—samples.	S14.4.2.1.3 Thickness.
SAE J576, Jul 1991, 3.3	Table XXII Plastic optical material tests	S14.4.2.2 Outdoor exposure test.
SAE J576, Jul 1991, 3.3.1	Table XXII Plastic optical material tests	S14.4.2.2.1 Location and duration.
SAE J576, Jul 1991, 3.3.2	Table XXII Plastic optical material tests—procedure.	S14.4.2.2.3.1 Mounting.
SAE J576, Jul 1991, 3.3.3	Table XXII Plastic optical material tests—procedure.	S14.4.2.2.3.2 Cleaning.
SAE J576, Jul 1991, 3.4.1	Table XXII Plastic optical material tests—performance requirements.	S14.4.2.2.4.4 Luminous transmittance.
SAE J576, Jul 1991, 4.1	Table XXII Plastic optical material tests—samples.	S14.4.2.1.4 Color.
SAE J576, Jul 1991, 4.2	Table XXII Plastic optical material tests—performance requirements.	S14.4.2.2.4 Performance requirements.
SAE J576, Jul 1991, 4.2.1	Table XXII Plastic optical material tests—performance requirements.	S14.4.2.2.4.4 Luminous transmittance.
SAE J576, Jul 1991, 4.2.2	Table XXII Plastic optical material tests—performance requirements.	S14.4.2.2.4.5 Color test.
SAE J576, Jul 1991, 4.2.3	Table XXII Plastic optical material tests—performance requirements.	S14.4.2.2.4.2 Headlamps.
SAE J576, Jul 1991, 4.2.4	Table XXII Plastic optical material tests—performance requirements.	S14.4.2.2.4.3 Physical changes.
SAE J576, Jul 1991, 5	S6.8.4.1 UV tracer	S14.1.3 UV tracer.
SAE J577, Apr 1964, Figure 1	SAE J577, Apr 1964, Figure 1	Figure 21.
SAE J577, Apr 1964, Table 1	SAE J577, Apr 1964, Table 1	Figure 21.
SAE J578c, Feb 1977	Table XXII Color test	S14.4.1 Color test.
SAE J578c, Feb 1977, 2	S4 Definitions—Color	S4 Definitions—Color.
SAE J578c, Feb 1977, 2.1	Table XXII Color test—performance requirements.	S14.4.1.4.2 Performance requirements.
SAE J578c, Feb 1977, 2.1	Table XXII Color test—performance requirements.	S14.4.1.4.2.1 Red.
SAE J578c, Feb 1977, 2.2	Table XXII Color test—performance requirements.	S14.4.1.4.2 Performance requirements.
SAE J578c, Feb 1977, 2.2	Table XXII Color test—performance requirements.	S14.4.1.4.2.2 Yellow (Amber).
SAE J578c, Feb 1977, 2.3	Table XXII Color test—performance requirements.	S14.4.1.4.2 Performance requirements.
SAE J578c, Feb 1977, 2.3	Table XXII Color test—performance requirements.	S14.4.1.4.2.3 White.
SAE J578c, Feb 1977, 3	Table XXII Color test	S14.4.1.2.1 Design voltage.
SAE J578c, Feb 1977, 3	Table XXII Color test	S14.4.1.2.2 Components.
SAE J578c, Feb 1977, 3.1	Table XXII Color test—performance requirements.	S14.4.1.3.2 Performance requirements.
SAE J578c, Feb 1977, 3.1	Table XXII Color test—performance requirements.	S14.4.1.3.2.1 Red.
SAE J578c, Feb 1977, 3.1	Table XXII Color test—performance requirements.	S14.4.1.3.2.2 Yellow (Amber).
SAE J578c, Feb 1977, 3.1	Table XXII Color test—performance requirements.	S14.4.1.3.2.3 White.
SAE J578c, Feb 1977, 3.1	Table XXII Color test—procedure	S14.4.1.3 Visual method.
SAE J578c, Feb 1977, 3.1	Table XXII Color test—procedure	S14.4.1.3.1 Procedure.
SAE J578c, Feb 1977, 3.2	Table XXII Color test—procedure	S14.4.1.4 Tristimulus method.
SAE J578c, Feb 1977, 3.2	Table XXII Color test—procedure	S14.4.1.4.1 Procedure.
SAE J578c, Feb 1977, 3.2	Table XXII Color test—procedure	S14.4.1.4.1.1 Receiver spectral response.
SAE J578c, Feb 1977, 3.2	Table XXII Color test—procedure	S14.4.1.4.1.2 Integrating sphere.
SAE J578c, Feb 1977, 3.2	Table XXII Color test—procedure	S14.4.1.4.1.3 Non uniform color.
SAE J578c, Feb 1977, A2(b)	Table XXII Color test	S14.4.1.2.3 Operating temperature.
SAE J578c, Feb 1977, A2(c)	Table XXII Color test	S14.4.1.2.5 Test distance.

APPENDIX A.—FMVSS NO. 108 REWRITE CROSS REFERENCE—Continued

Current FMVSS No. 108 or incorporated document citation	FMVSS No. 108 rewrite NPRM citation	FMVSS No. 108 rewrite final rule citation
SAE J578c, Feb 1977, A2(d)	Table XXII Color test	S14.4.1.2.4 Visible surface.
SAE J578c, Feb 1977, Figure 1	Figure 1	Figure 1.
SAE J580, Dec 1986, 2.1	S4 Definitions—Sealed beam headlamp assembly.	S4 Definitions—Sealed beam headlamp assembly.
SAE J580, Dec 1986, 2.2	S4 Definitions—Mounting ring	S4 Definitions—Mounting ring.
SAE J580, Dec 1986, 2.3	S4 Definitions—Retaining ring	S4 Definitions—Retaining ring.
SAE J580, Dec 1986, 2.4	S4 Definitions—Aiming screws	S4 Definitions—Aiming screws.
SAE J580, Dec 1986, 4.1.2	S9.4 Physical tests	S10.13.4.1 Corrosion.
SAE J580, Dec 1986, 4.1.2	Table XXIII Corrosion test	S14.6.3 Corrosion test.
SAE J580, Dec 1986, 4.2	S10.7 Physical tests	S10.14.7.1 Aiming adjustment tests.
SAE J580, Dec 1986, 4.2	S11.7 Physical tests	S10.15.7.1 Aiming adjustment tests.
SAE J580, Dec 1986, 4.2	S9.4 Physical tests	S10.13.4.1 Aiming adjustment test.
SAE J580, Dec 1986, 4.2	Table XXIII Aiming adjustment test laboratory—procedure.	S14.6.17.1 Procedure.
SAE J580, Dec 1986, 4.2	Table XXIII Aiming adjustment test on vehicle—procedure.	S14.6.18.1 Procedure.
SAE J580, Dec 1986, 4.2	Table XXIII Aiming adjustment test on vehicle—procedure.	S14.6.18.1.1 Setup.
SAE J580, Dec 1986, 4.2	Table XXIII Aiming adjustment test on vehicle—procedure.	S14.6.18.1.3 Adjustments.
SAE J580, Dec 1986, 4.3	S10.7 Physical tests	S10.14.7.1 Inward force test.
SAE J580, Dec 1986, 4.3	S11.7 Physical tests	S10.15.7.1 Inward force test.
SAE J580, Dec 1986, 4.3	S9.4 Physical tests	S10.13.4.1 Inward force test.
SAE J580, Dec 1986, 4.3	Table XXIII Inward force test—procedure	S14.6.12.1 Procedure.
SAE J580, Dec 1986, 4.4	S10.7 Physical tests	S10.14.7.1 Connector test.
SAE J580, Dec 1986, 4.4	S10.7 Physical tests	S10.14.7.2 Connector—corrosion test.
SAE J580, Dec 1986, 4.4	S11.7 Physical tests	S10.15.7.1 Connector test.
SAE J580, Dec 1986, 4.4	S11.7 Physical tests	S10.15.7.1 Corrosion—connector test.
SAE J580, Dec 1986, 4.4	S9.4 Physical tests	S10.13.4.1 Connector test.
SAE J580, Dec 1986, 4.4	Table XXIII Headlamp connector test—procedure.	S14.6.15.1 Procedure.
SAE J580, Dec 1986, 4.5	S9.4 Physical tests	S10.13.4.1 Torque deflection test.
SAE J580, Dec 1986, 5.1.1.2	Table XXIII Corrosion test	S14.6.3 Corrosion test.
SAE J580, Dec 1986, 5.1.2.1	Table XXIII Aiming adjustment test laboratory—performance requirements.	S14.6.17.2.1 Sealed beam except Type F.
SAE J580, Dec 1986, 5.1.2.1	Table XXIII Aiming adjustment test laboratory—performance requirements.	S14.6.17.2.2 Type F, replaceable bulb, integral beam, and combination.
SAE J580, Dec 1986, 5.1.2.2	Table XXIII Aiming adjustment test laboratory—performance requirements.	S14.6.17.2.1 Sealed beam except Type F.
SAE J580, Dec 1986, 5.1.2.2	Table XXIII Aiming adjustment test laboratory—performance requirements.	S14.6.17.2.2 Type F, replaceable bulb, integral beam, and combination.
SAE J580, Dec 1986, 5.1.3	Table XXIII Inward force test—performance requirements.	S14.6.12.2 Performance requirements.
SAE J580, Dec 1986, 5.1.4	Table XXIII Headlamp connector test—performance requirements.	S14.6.15.2 Performance requirements.
SAE J580, Dec 1986, 5.1.5	Table XXIII Torque deflection test—performance requirements.	S14.6.13.2 Performance requirements.
SAE J580, Dec 1986, 5.1.6	S9.4 Physical tests	S10.13.4.2 Retaining ring test ex types G & H.
SAE J580, Dec 1986, 5.1.6	Table XXIII Retaining ring test	S14.6.14 Retaining ring test.
SAE J580, Dec 1986, 5.1.6	Table XXIII Retaining ring test—performance requirements.	S14.6.14.2 Performance requirements.
SAE J580, Dec 1986, 5.1.6	Table XXIII Retaining ring test—procedure	S14.6.14.1 Procedure.
SAE J580, Dec 1986, Figure 1	Figure 4	Figure 4.
SAE J580, Dec 1986, Figure 1	Table XXIII Headlamp connector test	S14.6.15 Headlamp connector test.
SAE J580, Dec 1986, Figure 2	Figure 18	Figure 18.
SAE J580, Dec 1986, Figure 3	Figure 16	Figure 16.
SAE J580, Dec 1986, Figure 4	Figure 17	Figure 17.
SAE J584, Apr 1964	S13.3 Physical tests	S10.17.4 Physical tests.
SAE J584, Apr 1964	S4 Definitions—Motor driven cycle	S4 Definitions—Motor driven cycle.
SAE J584, Apr 1964	S4 Definitions—Motorcycle or motor driven cycle headlamp.	S4 Definitions—Motorcycle or motor driven cycle headlamp.
SAE J584, Apr 1964	S6.8.5.6.2(j) Aiming—Motorcycle LB	S14.2.5.5.9 Motorcycle headlamp—lower beam headlamps designed to comply with Table XX.
SAE J584, Oct 1993	S6.8.5.6.2(i) Aiming—Motorcycle UB	S14.2.5.5.8 Motorcycle headlamp—upper beam headlamps designed to comply with Table XX.
SAE J585e, Sep 1977, 2.1	S4 Definitions—Taillamps	S4 Definitions—Taillamps.
SAE J585e, Sep 1977, 3	S7.2.2 Physical tests	S7.2.14 Physical tests.

APPENDIX A.—FMVSS NO. 108 REWRITE CROSS REFERENCE—Continued

Current FMVSS No. 108 or incorporated document citation	FMVSS No. 108 rewrite NPRM citation	FMVSS No. 108 rewrite final rule citation
SAE J585e, Sep 1977, 3.1	S7.2.1.1 Multiple compartments and multiple lamps.	S7.2.11 Multiple compartments and multiple lamps.
SAE J585e, Sep 1977, 3.1	S7.2.1.1 Multiple compartments and multiple lamps.	S7.2.11.1.
SAE J585e, Sep 1977, 3.1	S7.2.1.1 Multiple compartments and multiple lamps.	S7.2.11.2.
SAE J585e, Sep 1977, 3.1	S7.2.1.1 Multiple compartments and multiple lamps.	S7.2.11.3.
SAE J585e, Sep 1977, 3.1	S7.2.1.1.1 Lamps installed on vehicles 2032 mm or more in overall width.	S7.2.11.4 Taillamps installed on vehicles 2032 mm. or more in overall width.
SAE J585e, Sep 1977, 3.6.2	S6.8.5.1.2 Multiple compartment & multiple lamp photometry.	S14.2.1.5.1 All photometered together.
SAE J585e, Sep 1977, 3.6.2(a)	S6.8.5.1.2.1 Photometry of all compartments/lamps together.	S14.2.1.5.2(a) Measuring together.
SAE J585e, Sep 1977, 3.6.2(b)	S6.8.5.1.2.2 Photometry of individual compartments/lamps.	S14.2.1.5.2(b) Measuring individually.
SAE J585e, Sep 1977, 4	Table V SAE taillamp visibility	Table V–b SAE taillamp visibility.
SAE J585e, Sep 1977, Table 1, footnote 5	Omitted.	Table VIII footnote 4.
SAE J586, Feb 1984, 2.1	S4 Definitions—Stop lamps	S4 Definitions—Stop lamps.
SAE J586, Feb 1984, 4.1.5.2	S6.8.5.1.2 Multiple compartment & multiple lamp photometry.	S14.2.1.5.1 All photometered together.
SAE J586, Feb 1984, 4.1.5.2.1	S6.8.5.1.2.1 Photometry of all compartments/lamps together.	S14.2.1.5.2(a) Measuring together.
SAE J586, Feb 1984, 4.1.5.2.2	S6.8.5.1.2.2 Photometry of individual compartments/lamps.	S14.2.1.5.2(b) Measuring individually.
SAE J586, Feb 1984, 5	S7.3.2 Physical tests	S7.3.14 Physical tests.
SAE J586, Feb 1984, 5.1.5.2	S7.3.1.1 Multiple compartments and multiple lamps.	S7.3.11 Multiple compartments and multiple lamps.
SAE J586, Feb 1984, 5.1.5.2	S7.3.1.1 Multiple compartments and multiple lamps.	S7.3.11.1.
SAE J586, Feb 1984, 5.1.5.2	S7.3.1.1 Multiple compartments and multiple lamps.	S7.3.11.2.
SAE J586, Feb 1984, 5.1.5.2	S7.3.1.1 Multiple compartments and multiple lamps.	S7.3.11.3.
SAE J586, Feb 1984, 5.1.5.3	S7.3.1.2 Ratio to taillamps	S7.3.12 Ratio to taillamps.
SAE J586, Feb 1984, 5.1.5.3	S7.3.1.2 Ratio to taillamps	S7.3.12.1.
SAE J586, Feb 1984, 5.1.5.3	S7.3.1.2 Ratio to taillamps	S7.3.12.2.
SAE J586, Feb 1984, 5.1.5.3	S7.3.1.2 Ratio to taillamps	S7.3.12.3.
SAE J586, Feb 1984, 5.1.5.3	S7.3.1.2 Ratio to taillamps	S7.3.12.4.
SAE J586, Feb 1984, 5.1.5.3	Table IX footnote 6	Table IX footnote 6.
SAE J586, Feb 1984, 5.1.5.3	Table IX footnote 7	Table IX footnote 5.
SAE J586, Feb 1984, 5.1.5.3	Table IX footnote 7	Table XIII–a footnote 5, Table XIII–b, footnote 4.
SAE J586, Feb 1984, 5.1.5.3	Table IX Stop lamp—Photometric ratio	Table IX Stop lamp—Photometric ratio.
SAE J586, Feb 1984, 5.1.5.3	Table IX Stop lamp—Photometric ratio	Table XIII–b Motorcycle stop lamp—Photometric ratio.
SAE J586, Feb 1984, 5.3.1	S7.3.3 Combined lamp bulb indexing	S7.3.15 Combined lamp bulb indexing.
SAE J586, Feb 1984, 5.3.1	S7.3.3 Combined lamp bulb indexing	S7.3.15.1 Dual filament bulbs.
SAE J586, Feb 1984, 5.3.1	S7.3.3 Combined lamp bulb indexing	S7.3.15.2 Socket indexing.
SAE J586, Feb 1984, 5.4.1	Table V SAE stop lamp visibility	Table V–b SAE stop lamp visibility.
SAE J586, Feb 1984, Table 1	S7.3.1 Photometry	S7.3.13 Photometry.
SAE J586, Feb 1984, Table 1	S7.3.1 Photometry	S7.3.13.1.
SAE J586, Feb 1984, Table 1	Table IX Stop lamp—Individual point photometry.	Table IX Stop lamp—Individual point photometry.
SAE J586, Feb 1984, Table 1	Table IX Stop lamp—Zone photometry	Table IX Stop lamp—Group photometry.
SAE J586, Feb 1984, Table 1, footnote a	Standard note—new table	Table XIII–a footnote 1.
SAE J586, Feb 1984, Table 1, footnote a	Table IX footnote 1	Table IX footnote 1.
SAE J586, Feb 1984, Table 1, footnote b	Standard note—new table	Table XIII–a footnote 3, Table XIII–b footnote 1.
SAE J586, Feb 1984, Table 1, footnote b	Table IX footnote 3	Table IX footnote 3.
SAE J587, Oct 1981, 2	S4 Definitions—License plate lamps	S4 Definitions—License plate lamps.
SAE J587, Oct 1981, 3	S7.7.3 Physical tests	S7.7.14 Physical tests.
SAE J587, Oct 1981, 4	S7.7.3 Physical tests	S7.7.14 Physical tests.
SAE J587, Oct 1981, 5	S7.7.3 Physical tests	S7.7.14 Physical tests.
SAE J587, Oct 1981, 6.1	S6.6.1 License plate holder	S6.6.3 License plate holder.
SAE J587, Oct 1981, 6.2	S6.6.1 License plate holder	S6.6.3 License plate holder.
SAE J587, Oct 1981, 6.3	S6.8.5.3 License plate lamp photometry	S14.2.2 License plate lamp photometry.
SAE J587, Oct 1981, 6.3	S7.7.1 Installation	S7.7.15.1.
SAE J587, Oct 1981, 6.3	S7.7.1 Installation	S7.7.15.2.
SAE J587, Oct 1981, 6.3	S7.7.1 Installation	S7.7.15.3.
SAE J587, Oct 1981, 6.4	S6.1.4 License plate lamp	S6.1.3.3 License plate lamp.

APPENDIX A.—FMVSS NO. 108 REWRITE CROSS REFERENCE—Continued

Current FMVSS No. 108 or incorporated document citation	FMVSS No. 108 rewrite NPRM citation	FMVSS No. 108 rewrite final rule citation
SAE J587, Oct 1981, 6.5	S7.7.1.1 Incident light from a single lamp	S7.7.15.4 Incident light from a single lamp.
SAE J587, Oct 1981, 6.6	S7.7.1.2 Incident light from multiple lamps	S7.7.15.5 Incident light from multiple lamps.
SAE J587, Oct 1981, 6.7	S6.8.5.3.1 Illumination surface	S14.2.2.1 Illumination surface.
SAE J587, Oct 1981, 6.8	S6.8.5.3.2 Test stations	S14.2.2.2 Test stations.
SAE J587, Oct 1981, 7	S7.7.2 Photometry requirements	S7.7.13 Photometry.
SAE J587, Oct 1981, 7	S7.7.2 Photometry requirements	S7.7.13. Ratio—motorcycles and motor driven cycles.
SAE J587, Oct 1981, 7	S7.7.2 Photometry requirements	S7.7.13.1.
SAE J587, Oct 1981, 7	S7.7.2 Photometry requirements	S7.7.13.2 Illumination.
SAE J587, Oct 1981, 7	S7.7.2 Photometry requirements	S7.7.13.3 Ratio except motorcycles and motor driven cycles.
SAE J587, Oct 1981, Figure 1	Table XIII	Figure 19.
SAE J587, Oct 1981, Figure 2	Table XIII	Figure 19.
SAE J587, Oct 1981, Figure 3	Not included	Figure 20.
SAE J588, Nov 1984, 2.1	S4 Definitions—Turn signal lamps	S4 Definitions—Turn signal lamps.
SAE J588, Nov 1984, 4	S7.1.3 Physical tests	S7.1.1.14 Physical tests.
SAE J588, Nov 1984, 4	S7.1.3 Physical tests	S7.1.2.14 Physical tests.
SAE J588, Nov 1984, 4.1.5.2	S6.8.5.1.2 Multiple compartment & multiple lamp photometry.	S14.2.1.5.1 All photometered together.
SAE J588, Nov 1984, 4.1.5.2.1	S6.8.5.1.2.1 Photometry of all compartments/lamps together.	S14.2.1.5.2(a) Measuring together.
SAE J588, Nov 1984, 4.1.5.2.2	S6.8.5.1.2.2 Photometry of individual compartments/lamps.	S14.2.1.5.2(b) Measuring individually.
SAE J588, Nov 1984, 5.1.5.2	S7.1.1.3 Multiple compartments and multiple lamps.	S7.1.1.11 Multiple compartments and multiple lamps.
SAE J588, Nov 1984, 5.1.5.2	S7.1.1.3 Multiple compartments and multiple lamps.	S7.1.1.11.1.
SAE J588, Nov 1984, 5.1.5.2	S7.1.1.3 Multiple compartments and multiple lamps.	S7.1.1.11.2.
SAE J588, Nov 1984, 5.1.5.2	S7.1.1.3 Multiple compartments and multiple lamps.	S7.1.1.11.3.
SAE J588, Nov 1984, 5.1.5.2	S7.1.2.2 Multiple compartments and multiple lamps.	S7.1.2.11 Multiple compartments and multiple lamps.
SAE J588, Nov 1984, 5.1.5.2	S7.1.2.2 Multiple compartments and multiple lamps.	S7.1.2.11.1.
SAE J588, Nov 1984, 5.1.5.2	S7.1.2.2 Multiple compartments and multiple lamps.	S7.1.2.11.2.
SAE J588, Nov 1984, 5.1.5.2	S7.1.2.2 Multiple compartments and multiple lamps.	S7.1.2.11.3.
SAE J588, Nov 1984, 5.1.5.3	S7.1.1.3.2 Ratio to parking lamps and clearance lamps.	S7.1.1.12 Ratio to parking lamps and clearance lamps.
SAE J588, Nov 1984, 5.1.5.3	S7.1.1.3.2 Ratio to parking lamps and clearance lamps.	S7.1.1.12.1.
SAE J588, Nov 1984, 5.1.5.3	S7.1.1.3.2 Ratio to parking lamps and clearance lamps.	S7.1.1.12.2.
SAE J588, Nov 1984, 5.1.5.3	S7.1.1.3.2 Ratio to parking lamps and clearance lamps.	S7.1.1.12.3.
SAE J588, Nov 1984, 5.1.5.3	S7.1.1.3.2 Ratio to parking lamps and clearance lamps.	S7.1.1.12.4.
SAE J588, Nov 1984, 5.1.5.3	S7.1.2.3 Ratio to taillamps and clearance lamps.	S7.1.2.12 Ratio to taillamps and clearance lamps.
SAE J588, Nov 1984, 5.1.5.3	S7.1.2.3 Ratio to taillamps and clearance lamps.	S7.1.2.12.1.
SAE J588, Nov 1984, 5.1.5.3	S7.1.2.3 Ratio to taillamps and clearance lamps.	S7.1.2.12.2.
SAE J588, Nov 1984, 5.1.5.3	S7.1.2.3 Ratio to taillamps and clearance lamps.	S7.1.2.12.3.
SAE J588, Nov 1984, 5.1.5.3	S7.1.2.3 Ratio to taillamps and clearance lamps.	S7.1.2.12.4.
SAE J588, Nov 1984, 5.1.5.3	Table VI Front turn signal lamp—Photometric ratio.	Table VI Front turn signal lamp—Photometric ratio.
SAE J588, Nov 1984, 5.1.5.3	Table VII footnote 8	Table VII footnote 8.
SAE J588, Nov 1984, 5.1.5.3	Table VII Rear turn signal lamp—Photometric ratio.	Table VII Rear turn signal lamp—Photometric ratio.
SAE J588, Nov 1984, 5.1.5.4	S7.1.1.2 Spacing to other lamps	S7.1.1.10 Spacing to other lamps.
SAE J588, Nov 1984, 5.1.5.4	S7.1.1.2 Spacing to other lamps	S7.1.1.10.1.
SAE J588, Nov 1984, 5.1.5.4	Table VI Front turn signal lamp—1.5 × base individual point photometry.	Table VI–b Front turn signal lamp—1.5 × base individual point photometry.
SAE J588, Nov 1984, 5.1.5.4	Table VI Front turn signal lamp—1.5 × base zone photometry.	Table VI–b Front turn signal lamp—1.5 × base group photometry.

APPENDIX A.—FMVSS NO. 108 REWRITE CROSS REFERENCE—Continued

Current FMVSS No. 108 or incorporated document citation	FMVSS No. 108 rewrite NPRM citation	FMVSS No. 108 rewrite final rule citation
SAE J588, Nov 1984, 5.1.5.4	Table VI Front turn signal lamp—2 × base individual point photometry.	Table VI–b Front turn signal lamp—2 × base individual point photometry.
SAE J588, Nov 1984, 5.1.5.4	Table VI Front turn signal lamp—2 × base zone photometry.	Table VI–b Front turn signal lamp—2 × base group photometry.
SAE J588, Nov 1984, 5.1.5.4	Table VI Front turn signal lamp—2.5 × base individual point photometry.	Table VI–a Front turn signal lamp—2.5 × base individual point photometry.
SAE J588, Nov 1984, 5.1.5.4	Table VI Front turn signal lamp—2.5 × base zone photometry.	Table VI–a Front turn signal lamp—2.5 × base group photometry.
SAE J588, Nov 1984, 5.1.5.4.1	S7.1.1.2.1 Spacing measurement for non reflector lamps.	S7.1.1.10.2 Spacing measurement for non reflector lamps.
SAE J588, Nov 1984, 5.1.5.4.2	S7.1.1.2.2 Spacing measurement for lamps with reflectors.	S7.1.1.10.3 Spacing measurement for lamps with reflectors.
SAE J588, Nov 1984, 5.3.1	S7.1.4 Combined lamp bulb indexing	S7.1.3 Combined lamp bulb indexing.
SAE J588, Nov 1984, 5.3.1	S7.1.4 Combined lamp bulb indexing	S7.1.3.1 Dual filament bulbs.
SAE J588, Nov 1984, 5.3.1	S7.1.4 Combined lamp bulb indexing	S7.1.3.2 Socket indexing.
SAE J588, Nov 1984, 5.3.2	Table IV Front turn signal lamp—Effective projected luminous lens area.	Table IV–a Front turn signal lamp—Effective projected luminous lens area.
SAE J588, Nov 1984, 5.4.1	Table V SAE turn signal lamp visibility	Table V–b SAE turn signal lamp visibility.
SAE J588, Nov 1984, Table 1	S7.1.1.1 Photometry	S7.1.1.13 Photometry.
SAE J588, Nov 1984, Table 1	S7.1.1.1 Photometry	S7.1.1.13.1.
SAE J588, Nov 1984, Table 1	S7.1.1.1 Photometry	S7.1.1.13.2.
SAE J588, Nov 1984, Table 1	S7.1.2.1 Photometry	S7.1.2.13 Photometry.
SAE J588, Nov 1984, Table 1	S7.1.2.1 Photometry	S7.1.2.13.1.
SAE J588, Nov 1984, Table 1	Table VI Front turn signal lamp—Base zone photometry.	Table VI–a Front turn signal lamp—Base group photometry.
SAE J588, Nov 1984, Table 1	Table VII footnote 5	Table VII footnote 5.
SAE J588, Nov 1984, Table 1	Table VII Rear turn signal lamp—Amber lamp zone photometry.	Table VII Rear turn signal lamp—Amber lamp group photometry.
SAE J588, Nov 1984, Table 1	Table VII Rear turn signal lamp—Red lamp zone photometry.	Table VII Rear turn signal lamp—Red lamp group photometry.
SAE J588, Nov 1984, Table 1, footnote a	Standard note—new table	Table XIII–a footnote 1.
SAE J588, Nov 1984, Table 1, footnote a	Table VI footnote 1	Table VI footnote 1.
SAE J588, Nov 1984, Table 1, footnote a	Table VII footnote 1	Table VII footnote 1.
SAE J588, Nov 1984, Table 1, footnote b	Table VII footnote 4	Table VII footnote 4.
SAE J588, Nov 1984, Table 2	S7.1.1.2.3 Spacing based photometric multipliers.	S7.1.1.10.4 Spacing based photometric multipliers.
SAE J588, Nov 1984, Table 2	Table VI Front turn signal lamp—1.5 × base individual point photometry.	Table VI–b Front turn signal lamp—1.5 × base individual point photometry.
SAE J588, Nov 1984, Table 2	Table VI Front turn signal lamp—2 × base individual point photometry.	Table VI–b Front turn signal lamp—2 × base individual point photometry.
SAE J588, Nov 1984, Table 2	Table VI Front turn signal lamp—2 × base zone photometry.	Table VI–b Front turn signal lamp—2 × base group photometry.
SAE J588, Nov 1984, Table 2	Table VI Front turn signal lamp—2.5 × base individual point photometry.	Table VI–a Front turn signal lamp—2.5 × base individual point photometry.
SAE J588, Nov 1984, Table 2	Table VI Front turn signal lamp—2.5 × base zone photometry.	Table VI–a Front turn signal lamp—2.5 × base group photometry.
SAE J588, Nov 1984, Table 2	Table VI Front turn signal lamp—1.5 × base zone photometry.	Table VI–b Front turn signal lamp—1.5 × base group photometry.
SAE J588, Nov 1984, Table 3	Table VI Front turn signal lamp—Base individual point photometry.	Table VI–a Front turn signal lamp—Base individual point photometry.
SAE J588, Nov 1984, Table 3	Table VII Rear turn signal lamp—Amber lamp individual point photometry.	Table VII Rear turn signal lamp—Amber lamp individual point photometry.
SAE J588, Nov 1984, Table 3	Table VII Rear turn signal lamp—Red lamp individual point photometry.	Table VII Rear turn signal lamp—Red lamp individual point photometry.
SAE J588e, Sep 1970	S7.14.3 Turn signal pilot indicator	S9.3 Turn signal pilot indicator.
SAE J588e, Sep 1970	S7.14.3 Turn signal pilot indicator	S9.3.1 TS lamps not visible.
SAE J588e, Sep 1970	S7.14.3 Turn signal pilot indicator	S9.3.2 Indicator light(s).
SAE J588e, Sep 1970	S7.14.3 Turn signal pilot indicator	S9.3.3 Function.
SAE J588e, Sep 1970	S7.14.3.1 Indicator size and color	S9.3.4 Indicator size and color.
SAE J588e, Sep 1970	S7.14.3.1 Indicator size and color	S9.3.4.1 Interior mounted.
SAE J588e, Sep 1970	S7.14.3.1 Indicator size and color	S9.3.4.2 Exterior mounted.
SAE J588e, Sep 1970	S7.14.3.1 Indicator size and color	S9.3.5 Visibility.
SAE J588e, Sep 1970, 3.4	SAE J588e, Sep 1970, 3.4	S6.1.1.3.1.
SAE J588e, Sep 1970, 3.9.1	SAE J588e, Sep 1970, 3.9.1	S6.1.1.3.
SAE J588e, Sep 1970, 3.9.1	Table VII footnote 6	Table VII footnote 6.
SAE J589, Apr 1964	S4 Definitions—Turn signal operating unit	S4 Definitions—Turn signal operating unit.
SAE J589, Apr 1964	Table XXI	S9.1.2 Physical tests.
SAE J589, Apr 1964	Table XXI Turn signal operating unit durability test.	S14.9.1 Turn Signal operating unit durability test.
SAE J589, Apr 1964	Table XXI Turn signal operating unit durability test—performance requirements.	S14.9.1.3 Performance requirements.

APPENDIX A.—FMVSS NO. 108 REWRITE CROSS REFERENCE—Continued

Current FMVSS No. 108 or incorporated document citation	FMVSS No. 108 rewrite NPRM citation	FMVSS No. 108 rewrite final rule citation
SAE J589, Apr 1964	Table XXI Turn signal operating unit durability test—performance requirements.	S14.9.1.3.2 Voltage drop (2032 mm or wider).
SAE J589, Apr 1964	Table XXI Turn signal operating unit durability test—performance requirements.	S14.9.1.3.3 Stop contacts.
SAE J589, Apr 1964	Table XXI Turn signal operating unit durability test—procedure.	S14.9.1.1 Power supply specifications.
SAE J589, Apr 1964	Table XXI Turn signal operating unit durability test—procedure.	S14.9.1.2 Procedure.
SAE J589, Apr 1964	Table XXI Turn signal operating unit durability test—procedure.	S14.9.1.2.1 Circuit.
SAE J589, Apr 1964	Table XXI Turn signal operating unit durability test—procedure.	S14.9.1.2.2 Cycle.
SAE J589, Apr 1964	Table XXI Turn signal operating unit durability test—procedure.	S14.9.1.2.3 Voltage drop.
SAE J590b, Oct 1965	S4 Definitions—Turn signal flasher	S4 Definitions—Turn signal flasher.
SAE J590b, Oct 1965	S7.14.2 Turn signal flasher	S9.2.1 Indicator signals.
SAE J590b, Oct 1965	Table XXI	S9.2.2 Physical tests.
SAE J590b, Oct 1965	Table XXI Turn signal flasher and vehicular hazard warning signal flasher tests.	S14.9.3 Turn signal flasher and vehicular hazard warning signal warning flasher tests.
SAE J590b, Oct 1965	Table XXI Turn signal flasher durability test	S14.9.3.6 Turn signal flasher durability test.
SAE J590b, Oct 1965	Table XXI Turn signal flasher durability test—performance requirements.	S14.9.3.6.3 Performance requirements.
SAE J590b, Oct 1965	Table XXI Turn signal flasher durability test—procedure.	S14.9.3.6.1 Samples.
SAE J590b, Oct 1965	Table XXI Turn signal flasher durability test—procedure.	S14.9.3.6.2 Procedure.
SAE J590b, Oct 1965	Table XXI Turn signal flasher durability test—procedure.	S14.9.3.6.2.1 Setup.
SAE J590b, Oct 1965	Table XXI Turn signal flasher durability test—procedure.	S14.9.3.6.2.2 Temperature and voltage.
SAE J590b, Oct 1965	Table XXI Turn signal flasher durability test—procedure.	S14.9.3.6.2.3 Duration.
SAE J590b, Oct 1965	Table XXI Turn signal flasher flash rate and percent current ''on'' time test.	S14.9.3.5 Turn signal flasher flash rate and percent current ''on'' time test.
SAE J590b, Oct 1965	Table XXI Turn signal flasher starting time test—procedure.	S14.9.3.3.1 Samples.
SAE J590b, Oct 1965	Table XXI Turn signal flasher voltage drop test.	S14.9.3.4 Turn signal flasher voltage drop test.
SAE J590b, Oct 1965	Table XXI Turn signal flasher voltage drop test—performance requirements.	S14.9.3.4.3 Performance requirements.
SAE J590b, Oct 1965	Table XXI Turn signal flasher voltage drop test—procedure.	S14.9.3.4.1 Samples.
SAE J590b, Oct 1965, 1	Table XXI Turn signal flasher starting time test.	S14.9.3.3 Turn signal flasher starting time test.
SAE J590b, Oct 1965, 1	Table XXI Turn signal flasher starting time test—performance requirements.	S14.9.3.3.3 Performance requirements.
SAE J590b, Oct 1965, 1	Table XXI Turn signal flasher starting time test—performance requirements.	S14.9.3.3.3(a) Normally closed contacts.
SAE J590b, Oct 1965, 1	Table XXI Turn signal flasher starting time test—performance requirements.	S14.9.3.3.3(b) Normally open contacts.
SAE J590b, Oct 1965, 1	Table XXI Turn signal flasher starting time test—procedure.	S14.9.3.3.2 Procedure.
SAE J590b, Oct 1965, 1	Table XXI Turn signal flasher starting time test—procedure.	S14.9.3.3.2.1 Setup.
SAE J590b, Oct 1965, 1	Table XXI Turn signal flasher starting time test—procedure.	S14.9.3.3.2.2 Measurement.
SAE J590b, Oct 1965, 2	Table XXI Turn signal flasher voltage drop test—procedure.	S14.9.3.4.2 Procedure.
SAE J590b, Oct 1965, 2	Table XXI Turn signal flasher voltage drop test—procedure.	S14.9.3.4.2.1 Setup.
SAE J590b, Oct 1965, 2	Table XXI Turn signal flasher voltage drop test—procedure.	S14.9.3.4.2.2 Measurement.
SAE J590b, Oct 1965, 3	Table XXI Turn signal flasher flash rate and percent current ''on'' time test—performance requirements.	S14.9.3.5.3 Performance requirements.
SAE J590b, Oct 1965, 3	Table XXI Turn signal flasher flash rate and percent current ''on'' time test—performance requirements.	S14.9.3.5.3(a) Normally closed contacts.
SAE J590b, Oct 1965, 3	Table XXI Turn signal flasher flash rate and percent current ''on'' time test—performance requirements.	S14.9.3.5.3(b) Normally open contacts.

APPENDIX A.—FMVSS NO. 108 REWRITE CROSS REFERENCE—Continued

Current FMVSS No. 108 or incorporated document citation	FMVSS No. 108 rewrite NPRM citation	FMVSS No. 108 rewrite final rule citation
SAE J590b, Oct 1965, 3	Table XXI Turn signal flasher flash rate and percent current ''on'' time test—procedure.	S14.9.3.5.1 Samples.
SAE J590b, Oct 1965, 3	Table XXI Turn signal flasher flash rate and percent current ''on'' time test—procedure.	S14.9.3.5.2 Procedure.
SAE J590b, Oct 1965, 3	Table XXI Turn signal flasher flash rate and percent current ''on'' time test—procedure.	S14.9.3.5.2.1 Setup.
SAE J590b, Oct 1965, 3	Table XXI Turn signal flasher flash rate and percent current ''on'' time test—procedure.	S14.9.3.5.2.2 Temperature and voltage.
SAE J590b, Oct 1965, 3	Table XXI Turn signal flasher flash rate and percent current ''on'' time test—procedure.	S14.9.3.5.2.3 Measurement.
SAE J590b, Oct 1965, Figure 1	Figure 2	Figure 2.
SAE J592e, Jul 1972, 2.1	S4 Definitions—Clearance lamps	S4 Definitions—Clearance lamps.
SAE J592e, Jul 1972, 2.2	S4 Definitions—Side marker lamps	S4 Definitions—Side marker lamps.
SAE J592e, Jul 1972, 2.3	S4 Definitions—Combination clearance and side marker lamps.	S4 Definitions—Combination clearance and side marker lamps.
SAE J592e, Jul 1972, 2.4	S4 Definitions—Identification lamps	S4 Definitions—Identification lamps.
SAE J592e, Jul 1972, 3	S7.4.2 Physical tests	S7.4.14 Physical tests.
SAE J592e, Jul 1972, 3	S7.5.2 Physical tests	S7.5.14 Physical tests.
SAE J592e, Jul 1972, Table 1	S7.4.1 Photometry	S7.4.13 Photometry.
SAE J592e, Jul 1972, Table 1	S7.4.1 Photometry	S7.4.13.1.
SAE J592e, Jul 1972, Table 1	S7.5.1 Photometry	S7.5.13 Photometry.
SAE J592e, Jul 1972, Table 1	Table X Amber side marker lamp photometry	Table X Amber side marker lamp photometry.
SAE J592e, Jul 1972, Table 1	Table X Red side marker lamp photometry	Table X Red side marker lamp photometry.
SAE J592e, Jul 1972, Table 1	Table XI Amber clearance and identification lamp photometry.	Table XI Amber clearance and identification lamp photometry.
SAE J592e, Jul 1972, Table 1	Table XI Red clearance and identification lamp photometry.	Table XI Red clearance and identification lamp photometry.
SAE J592e, Jul 1972, Table 1, footnote a	Table XI footnote 3	Table XI footnote 3.
SAE J592e, Jul 1972, Table 1, footnote b	S7.4.1.1 Inboard photometry	S7.4.13.2 Inboard photometry.
SAE J592e, Jul 1972, Table 1, footnote b	Table X footnote 1	Table X footnote 1.
SAE J593c, Feb 1968	S4 Definitions—Backup lamp	S4 Definitions—Backup lamp.
SAE J593c, Feb 1968	S7.6.2 Color	S7.6.2.2 Incidental light.
SAE J593c, Feb 1968	S7.6.3 Physical tests	S7.6.14 Physical tests.
SAE J593c, Feb 1968	Table I Activation—Backup lamps	Table I–a Activation—Backup lamps.
SAE J593c, Feb 1968, Table 1, footnote a	Table XII Single backup lamp system—Individual point photometry.	Table XII Single lamp system—Individual point photometry.
SAE J593c, Feb 1968, Table 1, footnote b	Table XII Two backup lamp system—Individual point photometry.	Table XII Two lamp systems Each lamp—Individual point photometry.
SAE J593c, Feb 1968, Table 1, footnote c	Table XII Backup lamp—Maximum photometric intensity.	Table XII Backup lamp—Maximum photometric intensity any single lamp.
SAE J594f, Jan 1977, 2	S4 Definitions—Reflex reflectors	S4 Definitions—Reflex reflectors.
SAE J594f, Jan 1977, 3	S7.10.2 Physical tests	S8.1.12 Physical tests.
SAE J594f, Jan 1977, 3.1.7	S6.8.5.4 Reflex reflector photometry	S14.2.3 Reflex reflector and retroreflective sheeting photometry.
SAE J594f, Jan 1977, 3.1.7	S6.8.5.4 Reflex reflector photometry	S14.2.3.1 Mounting.
SAE J594f, Jan 1977, 3.1.7	S6.8.5.4 Reflex reflector photometry	S14.2.3.2 Illumination source.
SAE J594f, Jan 1977, 3.1.7	S6.8.5.4 Reflex reflector photometry	S14.2.3.3 Measurement distance.
SAE J594f, Jan 1977, 3.1.7	S6.8.5.4 Reflex reflector photometry	S14.2.3.4 Test setup.
SAE J594f, Jan 1977, 3.1.7	S6.8.5.4 Reflex reflector photometry	S14.2.3.5 Photodetector.
SAE J594f, Jan 1977, 3.1.7	S6.8.5.4 Reflex reflector photometry	S14.2.3.6 Photometry surface.
SAE J594f, Jan 1977, 3.1.7	S6.8.5.4.1 Reflex reflector and retroreflective sheeting photometry measurements.	S14.2.3.7 Procedure.
SAE J594f, Jan 1977, 3.1.7	S6.8.5.4.1 Reflex reflector and retroreflective sheeting photometry measurements.	S14.2.3.7.1 Observation angle.
SAE J594f, Jan 1977, 3.1.7	S6.8.5.4.1 Reflex reflector and retroreflective sheeting photometry measurements.	S14.2.3.7.2 Entrance angle.
SAE J594f, Jan 1977, 3.1.7	S6.8.5.4.1 Reflex reflector and retroreflective sheeting photometry measurements.	S14.2.3.7.3 Convention.
SAE J594f, Jan 1977, 3.1.7	S6.8.5.4.1 Reflex reflector and retroreflective sheeting photometry measurements.	S14.2.3.7.4 Luminous intensity and illumination.
SAE J594f, Jan 1977, 3.1.7	S6.8.5.4.1 Reflex reflector and retroreflective sheeting photometry measurements.	S14.2.3.8 Measurements.
SAE J594f, Jan 1977, 3.1.7	S6.8.5.4.1.1 Reflex reflector photometry measurement adjustments.	S14.2.3.8.3 Reflex reflector photometry measurement adjustments.
SAE J594f, Jan 1977, 3.1.7	S6.8.5.4.1.1 Reflex reflector photometry measurement adjustments.	S14.2.3.8.3.1 Reflectors with non fixed rotation.
SAE J594f, Jan 1977, 3.1.7	S6.8.5.4.1.1 Reflex reflector photometry measurement adjustments.	S14.2.3.8.3.2 Reflectors with fixed rotation.
SAE J594f, Jan 1977, 3.1.7	S6.8.5.4.1.1 Reflex reflector photometry measurement adjustments.	S14.2.3.8.3.3 Additional photometric readings.
SAE J594f, Jan 1977, 3.1.8	S6.8.2 Samples for test	S14.4.1.1 Samples.

APPENDIX A.—FMVSS NO. 108 REWRITE CROSS REFERENCE—Continued

Current FMVSS No. 108 or incorporated document citation	FMVSS No. 108 rewrite NPRM citation	FMVSS No. 108 rewrite final rule citation
SAE J594f, Jan 1977, Table 1	S7.10.1 Photometry	S8.1.11 Photometry.
SAE J594f, Jan 1977, Table 1	S7.10.1.1 Alternative side reflex reflectors	S8.1.13 Alternative side reflex reflector material.
SAE J594f, Jan 1977, Table 1	Table XVI Red reflex reflector photometry	Table XVI–a Red reflex reflector photometry.
SAE J594f, Jan 1977, Table 1, footnote a	Table XVI White reflex reflector photometry	Table XVI–a White reflex reflector photometry.
SAE J594f, Jan 1977, Table 1, footnote a	Table XVI Amber reflex reflector photometry	Table XVI–a Amber reflex reflector photometry.
SAE J594f, Jan 1977, Table 1A	S7.10.1 Photometry	S8.1.11 Photometry.
SAE J594f, Jan 1977, Table 1A	S7.10.1.1 Alternative side reflex reflectors	S8.1.13 Alternative side reflex reflector material.
SAE J594f, Jan 1977, Table 1A	Table XVI Red reflex reflector photometry	Table XVI–a Red reflex reflector photometry.
SAE J594f, Jan 1977, Table 1A, footnote a	Table XVI Amber reflex reflector photometry	Table XVI–a Amber reflex reflector photometry.
SAE J594f, Jan 1977, Table 1A, footnote a	Table XVI White reflex reflector photometry	Table XVI–a White reflex reflector photometry.
SAE J823b, Apr 1968	SAE J823b, Apr 1968	S14.9.3.1 Standard test circuit.
SAE J823b, Apr 1968	SAE J823b, Apr 1968	S14.9.3.1.1 Test circuit setup.
SAE J823b, Apr 1968, 4	SAE J823b, Apr 1968, 4	S14.9.3.1.1.1 Series resistance.
SAE J823b, Apr 1968, 5	SAE J823b, Apr 1968, 5	S14.9.3.1.1.2 A–B resistance.
SAE J823b, Apr 1968, 6	SAE J823b, Apr 1968, 6	S14.9.3.1.1.3 C–D voltage.
SAE J823b, Apr 1968, 7	SAE J823b, Apr 1968, 7	S14.9.3.1.1.4 Voltage adjustments—fixed load flashers.
SAE J823b, Apr 1968, 8	SAE J823b, Apr 1968, 8	S14.9.3.1.1.5 Voltage adjustments—variable load flashers.
SAE J823b, Apr 1968, 8	SAE J823b, Apr 1968, 8	S14.9.3.1.1.6 Measurements.
SAE J823b, Apr 1968, 10	SAE J590b, Oct 1965, 10	S14.9.3.2.1 Starting time, voltage drop, and flash rate & percent current ''on'' time tests.
SAE J823b, Apr 1968, 10	SAE J590b, Oct 1965, 10	S14.9.3.2.1(a) Transients.
SAE J823b, Apr 1968, 10	SAE J823b, Apr 1968, 10 and 11	S14.9.3.2 Power supply specifications.
SAE J823b, Apr 1968, 10(a)	SAE J823b, Apr 1968, 10(a)	S14.9.3.2.1(b) Output voltage.
SAE J823b, Apr 1968, 10(b)	SAE J823b, Apr 1968, 10(b)	S14.9.3.2.1(c) Output current.
SAE J823b, Apr 1968, 10(c)	SAE J823b, Apr 1968, 10(c)	S14.9.3.2.1(d) Static regulation.
SAE J823b, Apr 1968, 10(c)	SAE J823b, Apr 1968, 10(c)	S14.9.3.2.1(e) Dynamic regulation.
SAE J823b, Apr 1968, 10(d)	SAE J823b, Apr 1968, 10(d)	S14.9.3.2.1(f) Ripple voltage.
SAE J823b, Apr 1968, 11	SAE J590b, Oct 1965, 11	S14.9.3.2.2 Durability tests.
SAE J823b, Apr 1968, 11	SAE J590b, Oct 1965, 11	S14.9.3.2.2(a) Transients.
SAE J823b, Apr 1968, 11	SAE J823b, Apr 1968, 10 and 11	S14.9.3.2 Power supply specifications.
SAE J823b, Apr 1968, 11(a)	SAE J590b, Oct 1965, 11(a)	S14.9.3.2.2(b) Output voltage.
SAE J823b, Apr 1968, 11(b)	SAE J590b, Oct 1965, 11(b)	S14.9.3.2.2(c) Output current.
SAE J823b, Apr 1968, 11(c)	SAE J590b, Oct 1965, 11(c)	S14.9.3.2.2(d) Static regulation.
SAE J823b, Apr 1968, 11(c)	SAE J590b, Oct 1965, 11(c)	S14.9.3.2.2(e) Dynamic regulation.
SAE J823b, Apr 1968, 11(d)	SAE J590b, Oct 1965, 11(d)	S14.9.3.2.2(f) Ripple voltage.
SAE J823b, Apr 1968, Figure 1	SAE J823b, Apr 1968, Figure 1	Figure 22.
SAE J887, Jul 1964	S4 Definitions—School bus signal lamps	S4 Definitions—School bus signal lamps.
SAE J887, Jul 1964	S6.4.1 Effective projected luminous lens area requirements.	S6.4.1 Effective projected luminous lens area requirements.
SAE J887, Jul 1964	S6.4.2 Visibility	S6.4.2 Visibility.
SAE J887, Jul 1964	S6.4.6 School bus signal lamp aiming	S6.4.5 School bus signal lamp aiming.
SAE J887, Jul 1964	S6.8.5.1 Photometry ex headlamp, license lamp, & DRL.	S14.2.1.2 School bus signal lamp aiming.
SAE J887, Jul 1964	S7.13.2 Physical test requirements	S7.11.14 Physical tests.
SAE J887, Jul 1964	Table I Activation—School bus signal lamps	Table I–a Activation—School bus signal lamps.
SAE J887, Jul 1964	Table IV School bus signal lamp—Effective projected luminous lens area.	Table IV–c School bus signal lamp—Effective projected luminous lens area.
SAE J887, Jul 1964	Table V School bus signal lamp visibility	Table V–a School bus signal lamp visibility.
SAE J887, Jul 1964, Table 1	S7.13.1 Photometry	S7.11.13 Photometry.
SAE J887, Jul 1964, Table 1	Table XVII School bus signal lamp photometry	Table XVII School bus signal lamp photometry.
SAE J910, Jan 1966	Table XXI	S9.6.3 Physical tests.
SAE J910, Jan 1966	Table XXI Vehicular hazard warning signal operating unit durability test.	S14.9.2 Vehicular hazard warning signal operating unit durability test.
SAE J910, Jan 1966, 1	S4 Definitions—Vehicular hazard warning signal operating unit.	S4 Definitions—Vehicular hazard warning signal operating unit.
SAE J910, Jan 1966, 3(b)	S7.14.6 Vehicular hazard warning signal operating unit.	S9.6.1 Combinations.
SAE J910, Jan 1966, 3(c)	S7.14.6.1 Operating unit switch	S9.6.2 Operation.
SAE J910, Jan 1966, 3(d)	S7.14.6 Vehicular hazard warning signal operating unit.	S9.6.1 Combinations.
SAE J910, Jan 1966, 3(e)	S7.14.6.1 Operating unit switch	S9.6.2 Operation.

APPENDIX A.—FMVSS NO. 108 REWRITE CROSS REFERENCE—Continued

Current FMVSS No. 108 or incorporated document citation	FMVSS No. 108 rewrite NPRM citation	FMVSS No. 108 rewrite final rule citation
SAE J910, Jan 1966, 4	Table XXI Vehicular hazard warning signal operating unit durability test—performance requirements.	S14.9.2.2 Performance requirements.
SAE J910, Jan 1966, 4	Table XXI Vehicular hazard warning signal operating unit durability test—procedure.	S14.9.2.1 Procedure.
SAE J910, Jan 1966, 4	Table XXI Vehicular hazard warning signal operating unit durability test—procedure.	S14.9.2.1.1 Circuit.
SAE J910, Jan 1966, 4	Table XXI Vehicular hazard warning signal operating unit durability test—procedure.	S14.9.2.1.2 Cycle.
SAE J910, Jan 1966, 4	Table XXI Vehicular hazard warning signal operating unit durability test—procedure.	S14.9.2.1.3 Voltage drop.
SAE J910, Jan 1966, 5	S7.14.8 Vehicular hazard warning signal pilot indicator.	S9.8.2 Single TS indicators.
SAE J910, Jan 1966, 5	S7.14.8 Vehicular hazard warning signal pilot indicator.	S9.8.3 Function.
SAE J910, Jan 1966, 5	S7.14.8.1 Indicator size and color	S9.8.4 Indicator size and color.
SAE J945, Feb 1966	S4 Definitions—Vehicular hazard warning signal flasher.	S4 Definitions—Vehicular hazard warning signal flasher.
SAE J945, Feb 1966	S7.14.7 Vehicular hazard warning signal flasher.	S9.7.1 Indicator signals.
SAE J945, Feb 1966	S7.14.8 Vehicular hazard warning signal pilot indicator.	S9.8.2 Single TS indicators.
SAE J945, Feb 1966	S7.14.8 Vehicular hazard warning signal pilot indicator.	S9.8.3 Function.
SAE J945, Feb 1966	S7.14.8.1 Indicator size and color	S9.8.4 Indicator size and color.
SAE J945, Feb 1966	Table XXI	S9.7.2 Physical tests.
SAE J945, Feb 1966	Table XXI Turn signal flasher and vehicular hazard warning signal flasher tests.	S14.9.3 Turn signal flasher and vehicular hazard warning signal warning flasher tests.
SAE J945, Feb 1966	Table XXI Vehicular hazard warning signal flasher durability test.	S14.9.3.10 Vehicular hazard warning signal flasher durability test.
SAE J945, Feb 1966	Table XXI Vehicular hazard warning signal flasher flash rate and percent current ''on'' time test.	S14.9.3.9 Vehicular hazard warning signal flasher flash rate and percent current ''on'' time test.
SAE J945, Feb 1966	Table XXI Vehicular hazard warning signal flasher flash rate and percent current ''on'' time test—procedure.	S14.9.3.9.1 Samples.
SAE J945, Feb 1966	Table XXI Vehicular hazard warning signal flasher starting time test.	S14.9.3.7 Vehicular hazard warning signal flasher starting time test.
SAE J945, Feb 1966	Table XXI Vehicular hazard warning signal flasher starting time test—procedure.	S14.9.3.7.1 Samples.
SAE J945, Feb 1966	Table XXI Vehicular hazard warning signal flasher voltage drop test.	S14.9.3.8 Vehicular hazard warning signal flasher voltage drop test.
SAE J945, Feb 1966	Table XXI Vehicular hazard warning signal flasher voltage drop test—performance requirements.	S14.9.3.8.3 Performance requirements.
SAE J945, Feb 1966	Table XXI Vehicular hazard warning signal flasher voltage drop test—procedure.	S14.9.3.8.1 Samples.
SAE J945, Feb 1966, 1	Table XXI Vehicular hazard warning signal flasher starting time test—performance requirements.	S14.9.3.7.3 Performance requirements.
SAE J945, Feb 1966, 1	Table XXI Vehicular hazard warning signal flasher starting time test—performance requirements.	S14.9.3.7.3(a) Normally closed contacts.
SAE J945, Feb 1966, 1	Table XXI Vehicular hazard warning signal flasher starting time test—performance requirements.	S14.9.3.7.3(b) Normally open contacts.
SAE J945, Feb 1966, 1	Table XXI Vehicular hazard warning signal flasher starting time test—procedure.	S14.9.3.7.2 Procedure.
SAE J945, Feb 1966, 1	Table XXI Vehicular hazard warning signal flasher starting time test—procedure.	S14.9.3.7.2.1 Setup.
SAE J945, Feb 1966, 1	Table XXI Vehicular hazard warning signal flasher starting time test—procedure.	S14.9.3.7.2.2 Measurement.
SAE J945, Feb 1966, 2	Table XXI Vehicular hazard warning signal flasher voltage drop test—procedure.	S14.9.3.8.2 Procedure.
SAE J945, Feb 1966, 2	Table XXI Vehicular hazard warning signal flasher voltage drop test—procedure.	S14.9.3.8.2.1 Setup.
SAE J945, Feb 1966, 2	Table XXI Vehicular hazard warning signal flasher voltage drop test—procedure.	S14.9.3.8.2.2 Measurement.
SAE J945, Feb 1966, 3	Table XXI Vehicular hazard warning signal flasher flash rate and percent current ''on'' time test—performance requirements.	S14.9.3.9.3 Performance requirements.

APPENDIX A.—FMVSS NO. 108 REWRITE CROSS REFERENCE—Continued

Current FMVSS No. 108 or incorporated document citation	FMVSS No. 108 rewrite NPRM citation	FMVSS No. 108 rewrite final rule citation
SAE J945, Feb 1966, 3	Table XXI Vehicular hazard warning signal flasher flash rate and percent current ''on'' time test—performance requirements.	S14.9.3.9.3(a) Normally closed contacts.
SAE J945, Feb 1966, 3	Table XXI Vehicular hazard warning signal flasher flash rate and percent current ''on'' time test—performance requirements.	S14.9.3.9.3(b) Normally open contacts.
SAE J945, Feb 1966, 3	Table XXI Vehicular hazard warning signal flasher flash rate and percent current ''on'' time test—procedure.	S14.9.3.9.2 Procedure.
SAE J945, Feb 1966, 3	Table XXI Vehicular hazard warning signal flasher flash rate and percent current ''on'' time test—procedure.	S14.9.3.9.2.1 Setup.
SAE J945, Feb 1966, 3	Table XXI Vehicular hazard warning signal flasher flash rate and percent current ''on'' time test—procedure.	S14.9.3.9.2.2 Temperature and voltage.
SAE J945, Feb 1966, 3	Table XXI Vehicular hazard warning signal flasher flash rate and percent current ''on'' time test—procedure.	S14.9.3.9.2.3 Measurement.
SAE J945, Feb 1966, 4	Table XXI Vehicular hazard warning signal flasher durability test—performance requirements.	S14.9.3.10.3 Performance requirements.
SAE J945, Feb 1966, 4	Table XXI Vehicular hazard warning signal flasher durability test—procedure.	S14.9.3.10.1 Samples.
SAE J945, Feb 1966, 4	Table XXI Vehicular hazard warning signal flasher durability test—procedure.	S14.9.3.10.2 Procedure.
SAE J945, Feb 1966, 4	Table XXI Vehicular hazard warning signal flasher durability test—procedure.	S14.9.3.10.2.1 Setup.
SAE J945, Feb 1966, 4	Table XXI Vehicular hazard warning signal flasher durability test—procedure.	S14.9.3.10.2.2 Temperature and voltage.
SAE J945, Feb 1966, 4	Table XXI Vehicular hazard warning signal flasher durability test—procedure.	S14.9.3.10.2.3 Duration.
SAE J945, Feb 1966, Figure 1	Figure 2	Figure 2.
SAE J1383, Apr 1985, 2.1	S4 Definitions—Headlamp	S4 Definitions—Headlamp.
SAE J1383, Apr 1985, 2.1.1	S17.3 Sealed beam headlamp markings	S6.5.3.3 Sealed beam headlamp markings.
SAE J1383, Apr 1985, 2.1.1	S4 Definitions—Sealed beam headlamp	S4 Definitions—Sealed beam headlamp.
SAE J1383, Apr 1985, 2.2	S4 Definitions—Upper beam	S4 Definitions—Upper beam.
SAE J1383, Apr 1985, 2.3	S4 Definitions—Lower beam	S4 Definitions—Lower beam.
SAE J1383, Apr 1985, 2.4	S4 Definitions—Mechanically aimable headlamp [OUT OF ALPHABETICAL ORDER].	S4 Definitions—Mechanically aimable headlamp.
SAE J1383, Apr 1985, 2.5	S4 Definitions—Aiming plane	S4 Definitions—Aiming plane.
SAE J1383, Apr 1985, 2.6	S4 Definitions—Headlamp mechanical axis	S4 Definitions—Headlamp mechanical axis.
SAE J1383, Apr 1985, 2.7	S4 Definitions—H–V axis	S4 Definitions—H–V axis.
SAE J1383, Apr 1985, 2.9	S4 Definitions—Seasoning	S4 Definitions—Seasoning.
SAE J1383, Apr 1985, 2.10	S4 Definitions—Design Voltage	S4 Definitions—Design Voltage.
SAE J1383, Apr 1985, 2.11	S4 Definitions—Test voltage	S4 Definitions—Test voltage.
SAE J1383, Apr 1985, 2.12	S4 Definitions—Rated voltage	S4 Definitions—Rated voltage.
SAE J1383, Apr 1985, 4.1.4.1	S6.8.5.6.1 Seasoning and test voltage	S14.2.5.4 Seasoning and test voltage.
SAE J1383, Apr 1985, 4.1.4.2	S6.8.5.6 Headlamp photometry measurements.	S14.2.5.3 Measurement distance.
SAE J1383, Apr 1985, 4.1.4.3	S6.8.5.6.1 Seasoning and test voltage	S14.2.5.4 Seasoning and test voltage.
SAE J1383, Apr 1985, 4.1.4.3	S6.8.5.6.2(a) Aiming—mechanical	S14.2.5.5.1 Mechanically aimable headlamps using an external aimer.
SAE J1383, Apr 1985, 4.5.1	S6.8.2 Samples for test	S14.1.4.1 Representative samples.
SAE J1383, Apr 1985, 4.7	Table XXIII Headlamp wattage test	S14.6.16 Headlamp wattage test.
SAE J1383, Apr 1985, 4.7	Table XXIII Headlamp wattage test—procedure.	S14.6.16.1 Procedure.
SAE J1383, Apr 1985, 5.3	Relocated to Part 564, Appendix C	Relocated to Part 564, Appendix C.
SAE J1383, Apr 1985, 5.3.3	S17.3 Sealed beam headlamp markings	S6.5.3.3 Sealed beam headlamp markings.
SAE J1383, Apr 1985, 5.4.3	S17.3 Sealed beam headlamp markings	S6.5.3.3 Sealed beam headlamp markings.
SAE J1383, Apr 1985, 5.4.4	S17.3 Sealed beam headlamp markings	S6.5.3.3 Sealed beam headlamp markings.
SAE J1383, Apr 1985, 5.4.4.1	S17.3 Sealed beam headlamp markings	S6.5.3.3 Sealed beam headlamp markings.
SAE J1383, Apr 1985, 5.4.4.2	S17.3 Sealed beam headlamp markings	S6.5.3.3 Sealed beam headlamp markings.
SAE J1383, Apr 1985, 5.4.4.3	S17.3 Sealed beam headlamp markings	S6.5.3.3 Sealed beam headlamp markings.
SAE J1383, Apr 1985, 5.4.5	S17.3 Sealed beam headlamp markings	S6.5.3.3 Sealed beam headlamp markings.
SAE J1383, Apr 1985, Figure 5	Relocated to Part 564, Appendix C	Relocated to Part 564, Appendix C.
SAE J1383, Apr 1985, Figure 6	Relocated to Part 564, Appendix C	Relocated to Part 564, Appendix C.
SAE J1383, Apr 1985, Figure 7	Relocated to Part 564, Appendix C	Relocated to Part 564, Appendix C.
SAE J1383, Apr 1985, Figure 8	Relocated to Part 564, Appendix C	Relocated to Part 564, Appendix C.
SAE J1383, Apr 1985, Figure 9	Relocated to Part 564, Appendix C	Relocated to Part 564, Appendix C.
SAE J1383, Apr 1985, Figure 10	Relocated to Part 564, Appendix C	Relocated to Part 564, Appendix C.

APPENDIX A.—FMVSS NO. 108 REWRITE CROSS REFERENCE—Continued

Current FMVSS No. 108 or incorporated document citation	FMVSS No. 108 rewrite NPRM citation	FMVSS No. 108 rewrite final rule citation
SAE J1383, Apr 1985, Figure 11	Relocated to Part 564, Appendix C	Relocated to Part 564, Appendix C.
SAE J1383, Apr 1985, Figure 11	Relocated to Part 564, Appendix C	Relocated to Part 564, Appendix C.
SAE J1383, Apr 1985, Figure 12	Relocated to Part 564, Appendix C	Relocated to Part 564, Appendix C.
SAE J1383, Apr 1985, Figure 13	Relocated to Part 564, Appendix C	Relocated to Part 564, Appendix C.
SAE J1383, Apr 1985, Figure 14	Relocated to Part 564, Appendix C	Relocated to Part 564, Appendix C.
SAE J1383, Apr 1985, Figure 15	Relocated to Part 564, Appendix C	Relocated to Part 564, Appendix C.
SAE J1395, Apr 1985, 2.1	S4 Definitions—Turn signal lamps	S4 Definitions—Turn signal lamps.
SAE J1395, Apr 1985, 4	S7.1.3 Physical tests	S7.1.1.14 Physical tests.
SAE J1395, Apr 1985, 4.1.5.2	S6.8.5.1.2 Multiple compartment & multiple lamp photometry.	S14.2.1.5.1 All photometered together.
SAE J1395, Apr 1985, 4.1.5.2	S6.8.5.1.2.2 Photometry of individual compartments/lamps.	S14.2.1.5.2(b) Measuring individually.
SAE J1395, Apr 1985, 4.1.5.2	S6.8.5.1.2.3 Multiple compartment/lamp photometry for wide vehicles.	S14.2.1.5.3 Multiple on 2032 mm or wider.
SAE J1395, Apr 1985, 5.1.5.2	S7.1.1.3.2 Ratio to parking lamps and clearance lamps.	S7.1.1.12 Ratio to parking lamps and clearance lamps.
SAE J1395, Apr 1985, 5.1.5.2	S7.1.1.3.2 Ratio to parking lamps and clearance lamps.	S7.1.1.12.1.
SAE J1395, Apr 1985, 5.1.5.2	S7.1.1.3.2 Ratio to parking lamps and clearance lamps.	S7.1.1.12.2.
SAE J1395, Apr 1985, 5.1.5.2	S7.1.1.3.2 Ratio to parking lamps and clearance lamps.	S7.1.1.12.3.
SAE J1395, Apr 1985, 5.1.5.2	S7.1.1.3.2 Ratio to parking lamps and clearance lamps.	S7.1.1.12.4.
SAE J1395, Apr 1985, 5.1.5.2	Table VI footnote 4	Table VI footnote 4.
SAE J1395, Apr 1985, 5.1.5.2	Table VI Front turn signal lamp—Photometric ratio.	Table VI Front turn signal lamp—Photometric ratio.
SAE J1395, Apr 1985, 5.1.5.2	Table VII footnote 7	Table VII footnote 7.
SAE J1395, Apr 1985, 5.1.5.2	Table VII footnote 8	Table VII footnote 8.
SAE J1395, Apr 1985, 5.1.5.2	Table VII Rear turn signal lamp—Photometric ratio.	Table VII Rear turn signal lamp—Photometric ratio.
SAE J1395, Apr 1985, 5.1.5.3	Table VII footnote 6	Table VII footnote 6.
SAE J1395, Apr 1985, 5.1.5.4	Table VI Front turn signal lamp—1.5 × base individual point photometry.	Table VI–b Front turn signal lamp—1.5 × base individual point photometry.
SAE J1395, Apr 1985, 5.1.5.4	Table VI Front turn signal lamp—1.5 × base zone photometry.	Table VI–b Front turn signal lamp—1.5 × base group photometry.
SAE J1395, Apr 1985, 5.1.5.4	Table VI Front turn signal lamp—2 × base individual point photometry.	Table VI–b Front turn signal lamp—2 × base individual point photometry.
SAE J1395, Apr 1985, 5.1.5.4	Table VI Front turn signal lamp—2 × base zone photometry.	Table VI–b Front turn signal lamp—2 × base group photometry.
SAE J1395, Apr 1985, 5.1.5.4	Table VI Front turn signal lamp—2.5 × base individual point photometry.	Table VI–a Front turn signal lamp—2.5 × base individual point photometry.
SAE J1395, Apr 1985, 5.1.5.4	Table VI Front turn signal lamp—2.5 × base zone photometry.	Table VI–a Front turn signal lamp—2.5 × base group photometry.
SAE J1395, Apr 1985, 5.1.5.5	S7.1.1.2.1 Spacing measurement for non reflector lamps.	S7.1.1.10.2 Spacing measurement for non reflector lamps.
SAE J1395, Apr 1985, 5.1.5.6	S7.1.1.2.2 Spacing measurement for lamps with reflectors.	S7.1.1.10.3 Spacing measurement for lamps with reflectors.
SAE J1395, Apr 1985, 5.3.1	S7.1.3 Physical tests	S7.1.2.14 Physical tests.
SAE J1395, Apr 1985, 5.3.1	S7.1.4 Combined lamp bulb indexing	S7.1.3 Combined lamp bulb indexing.
SAE J1395, Apr 1985, 5.3.1	S7.1.4 Combined lamp bulb indexing	S7.1.3.1 Dual filament bulbs.
SAE J1395, Apr 1985, 5.3.1	S7.1.4 Combined lamp bulb indexing	S7.1.3.2 Socket indexing.
SAE J1395, Apr 1985, 5.3.2	Table IV Front turn signal lamp—Effective projected luminous lens area.	Table IV–a Front turn signal lamp—Effective projected luminous lens area.
SAE J1395, Apr 1985, 5.3.2	Table IV Rear turn signal lamp—Effective projected luminous lens area.	Table IV–a Rear turn signal lamp—Effective projected luminous lens area.
SAE J1395, Apr 1985, 5.4.1	Table V SAE turn signal lamp visibility	Table V–b SAE turn signal lamp visibility.
SAE J1395, Apr 1985, Table 1	S7.1.1.1 Photometry	S7.1.1.13 Photometry.
SAE J1395, Apr 1985, Table 1	S7.1.1.1 Photometry	S7.1.1.13.1.
SAE J1395, Apr 1985, Table 1	S7.1.1.1 Photometry	S7.1.1.13.2.
SAE J1395, Apr 1985, Table 1	S7.1.2.1 Photometry	S7.1.2.13 Photometry.
SAE J1395, Apr 1985, Table 1	S7.1.2.1 Photometry	S7.1.2.13.1.
SAE J1395, Apr 1985, Table 1	S7.1.2.3 Ratio to taillamps and clearance lamps.	S7.1.2.12 Ratio to taillamps and clearance lamps.
SAE J1395, Apr 1985, Table 1	S7.1.2.3 Ratio to taillamps and clearance lamps.	S7.1.2.12.1.
SAE J1395, Apr 1985, Table 1	S7.1.2.3 Ratio to taillamps and clearance lamps.	S7.1.2.12.4.
SAE J1395, Apr 1985, Table 1	Table VI Front turn signal lamp—Base zone photometry.	Table VI–a Front turn signal lamp—Base group photometry.

APPENDIX A.—FMVSS NO. 108 REWRITE CROSS REFERENCE—Continued

Current FMVSS No. 108 or incorporated document citation	FMVSS No. 108 rewrite NPRM citation	FMVSS No. 108 rewrite final rule citation
SAE J1395, Apr 1985, Table 1	Table VII Rear turn signal lamp—Amber lamp zone photometry.	Table VII Rear turn signal lamp—Amber lamp group photometry.
SAE J1395, Apr 1985, Table 1	Table VII Rear turn signal lamp—Red lamp zone photometry.	Table VII Rear turn signal lamp—Red lamp group photometry.
SAE J1395, Apr 1985, Table 1	Table VII footnote 5	Table VII footnote 5.
SAE J1395, Apr 1985, Table 2	Table VI Front turn signal lamp—1.5 × base individual point photometry.	Table VI–b Front turn signal lamp—1.5 × base individual point photometry.
SAE J1395, Apr 1985, Table 2	Table VI Front turn signal lamp—1.5 × base zone photometry.	Table VI–b Front turn signal lamp—1.5 × base group photometry.
SAE J1395, Apr 1985, Table 2	Table VI Front turn signal lamp—2 × base individual point photometry.	Table VI–b Front turn signal lamp—2 × base individual point photometry.
SAE J1395, Apr 1985, Table 2	Table VI Front turn signal lamp—2 × base zone photometry.	Table VI–b Front turn signal lamp—2 × base group photometry.
SAE J1395, Apr 1985, Table 2	Table VI Front turn signal lamp—2.5 × base individual point photometry.	Table VI–a Front turn signal lamp—2.5 × base individual point photometry.
SAE J1395, Apr 1985, Table 2	Table VI Front turn signal lamp—2.5 × base zone photometry.	Table VI–a Front turn signal lamp—2.5 × base group photometry.
SAE J1395, Apr 1985, Table 3	Table VI Front turn signal lamp—Base individual point photometry.	Table VI–a Front turn signal lamp—Base individual point photometry.
SAE J1395, Apr 1985, Table 3	Table VII Rear turn signal lamp—Amber lamp individual point photometry.	Table VII Rear turn signal lamp—Amber lamp individual point photometry.
SAE J1395, Apr 1985, Table 3	Table VII Rear turn signal lamp—Red lamp individual point photometry.	Table VII Rear turn signal lamp—Red lamp individual point photometry.
SAE J1395, Apr 1985, footnote a	Table VI footnote 1	Table VI footnote 1.
SAE J1395, Apr 1985, footnote a	Table VII footnote 1	Table VII footnote 1.
SAE J1395, Apr 1985, footnote b	Table VII footnote 4	Table VII footnote 4.
SAE J1398, May 1985, 2.1	S4 Definitions—Stop lamps	S4 Definitions—Stop lamps.
SAE J1398, May 1985, 4.1.5.2	S6.8.5.1.2 Multiple compartment & multiple lamp photometry.	S14.2.1.5.1 All photometered together.
SAE J1398, May 1985, 4.1.5.2	S6.8.5.1.2.2 Photometry of individual compartments/lamps.	S14.2.1.5.2(b) Measuring individually.
SAE J1398, May 1985, 4.1.5.2	S6.8.5.1.2.3 Multiple compartment/lamp photometry for wide vehicles.	S14.2.1.5.3 Multiple on 2032 mm or wider.
SAE J1398, May 1985, 5	S7.3.2 Physical tests	S7.3.14 Physical tests.
SAE J1398, May 1985, 5.1.5.2	S7.3.1.2 Ratio to taillamps	S7.3.12 Ratio to taillamps.
SAE J1398, May 1985, 5.1.5.2	S7.3.1.2 Ratio to taillamps	S7.3.12.1.
SAE J1398, May 1985, 5.1.5.2	S7.3.1.2 Ratio to taillamps	S7.3.12.2.
SAE J1398, May 1985, 5.1.5.2	S7.3.1.2 Ratio to taillamps	S7.3.12.3.
SAE J1398, May 1985, 5.1.5.2	S7.3.1.2 Ratio to taillamps	S7.3.12.4.
SAE J1398, May 1985, 5.1.5.2	Table IX footnote 6	Table IX footnote 6.
SAE J1398, May 1985, 5.1.5.2	Table IX footnote 7	Table IX footnote 5.
SAE J1398, May 1985, 5.1.5.2	Table IX Stop lamp—Photometric ratio	Table IX Stop lamp—Photometric ratio.
SAE J1398, May 1985, 5.3.1	S7.3.3 Combined lamp bulb indexing	S7.3.15 Combined lamp bulb indexing.
SAE J1398, May 1985, 5.3.1	S7.3.3 Combined lamp bulb indexing	S7.3.15.1 Dual filament bulbs.
SAE J1398, May 1985, 5.3.1	S7.3.3 Combined lamp bulb indexing	S7.3.15.2 Socket indexing.
SAE J1398, May 1985, 5.3.2	Table IV Stop lamp—Effective projected luminous lens area.	Table IV–a Stop lamp—Effective projected luminous lens area.
SAE J1398, May 1985, 5.4.1	Table V SAE stop lamp visibility	Table V–b SAE stop lamp visibility.
SAE J1398, May 1985, Table 1	S7.3.1 Photometry	S7.3.13 Photometry.
SAE J1398, May 1985, Table 1	S7.3.1 Photometry	S7.3.13 Photometry.
SAE J1398, May 1985, Table 1	S7.3.1 Photometry	S7.3.13.1.
SAE J1398, May 1985, Table 1	S7.3.1 Photometry	S7.3.13.1.
SAE J1398, May 1985, Table 1	Table IX Stop lamp—Individual point photometry.	Table IX Stop lamp—Individual point photometry.
SAE J1398, May 1985, Table 1	Table IX Stop lamp—Zone photometry	Table IX Stop lamp—Group photometry.
SAE J1398, May 1985, footnote a	Table IX footnote 1	Table IX footnote 1.
SAE J1398, May 1985, footnote a	Table IX footnote 1	Table IX footnote 1.
SAE J1398, May 1985, footnote b	Table IX footnote 3	Table IX footnote 3.
SAE J1398, May 1985, footnote b	Table IX footnote 3	Table IX footnote 3.
64 FR 16358	64 FR 16358	Table I–a Mounting height—Clearance lamps—rear.
64 FR 16358	64 FR 16358	Table I–a Mounting height—Identification lamps—rear.
64 FR 16358	64 FR 16358	Table I–b Mounting height—Clearance lamps—rear.
64 FR 16358	64 FR 16358	Table I–b Mounting height—Identification lamps—rear.
70 FR 65972	S6.7 Replacement equipment	S6.7 Replacement equipment.
Interpretation—Alkire 11/28/89	S6.2.2 Lamp or reflective device obstructed	S6.2.2 Lamp or reflective device obstructed.
Interpretation—Camp 6/17/97	S4 Definitions—Overall width	S4 Definitions—Overall width.
Interpretation—Clarke 7/28/05	S6.2.5 Auxiliary identification lamps	S6.1.3.6 Auxiliary lamp.

APPENDIX A.—FMVSS NO. 108 REWRITE CROSS REFERENCE—Continued

Current FMVSS No. 108 or incorporated document citation	FMVSS No. 108 rewrite NPRM citation	FMVSS No. 108 rewrite final rule citation
Interpretation—Faber 5/26/00	Table I Activation—Stop lamps	Table I–a Activation—Stop lamps.
Interpretation—Faber 5/26/00	Table I Activation—Stop lamps	Table I–b Activation—Stop lamps.
Interpretation—Faber 5/26/00	Table I Activation—Stop lamps	Table I–c Activation—Stop lamps.
Interpretation—King 7/12/00	S6.1.3 Mounting location and height	S6.1.3.1.
Interpretation—King 7/12/00	S6.1.3 Mounting location and height	S6.1.3.2.
Interpretation—Nakaya 6/18/85	S6.1.3.2.1 High mounted stop lamp mounting	S6.1.4.1.1 High mounted stop lamp mounting.
Interpretation—Parkyn 6/1/98	Table IX footnote 5	Table XIII–b footnote 3.
Interpretation—Spingler 4/6/2000	S14.10.1.5 Measuring the cutoff parameter	S10.18.9.1.5 Measuring the cutoff parameter.
Interpretation—Spingler 7/2/99	Table XIX 10° U–90°U Test area	Table XIX 10° U–90°U Test area.
Various	S17 Headlamp marking requirements	S6.5.3 Headlamp marking requirements.
New figure	Figure 12–1	Figure 12–1.
New figure	Figure 12–2	Figure 12–2.
New language	Table V footnote 1	Table V footnote 1.
New reference to other sections	S17.5 Additional headlamp markings	S6.5.3.5 Additional headlamp markings.
New section	New section	S7.1.1.1 Number [New section—points to Table I].
New section	New section	S7.1.1.2 Color of light [New section—points to Table I].
New section	New section	S7.1.1.3 Mounting location [New section—points to Table I].
New section	New section	S7.1.1.4 Mounting height [New section—points to Table I].
New section	New section	S7.1.1.5 Activation [New section—points to Table I].
New section	New section	S7.1.1.6 Effective projected luminous lens area [New section—points to Table IV–a].
New section	New section	S7.1.1.7 Visibility [New section—points to S6.4].
New section	New section	S7.1.1.8 Indicator [New section—points to S9.3.
New section	New section	S7.1.1.9 Markings [New section—points to S6.5].
New section	New section	S7.1.2.1 Number [New section—points to Table I].
New section	New section	S7.1.2.2 Color of light [New section—points to Table I].
New section	New section	S7.1.2.3 Mounting location [New section—points to Table I and S6.1.3.2].
New section	New section	S7.1.2.4 Mounting height [New section—points to Table I].
New section	New section	S7.1.2.5 Activation [New section—points to Table I].
New section	New section	S7.1.2.6 Effective projected luminous lens area [New section—points to Table IV–a].
New section	New section	S7.1.2.7 Visibility [New section—points to S6.4].
New section	New section	S7.1.2.8 Indicator [New section—points to S9.3].
New section	New section	S7.1.2.9 Markings [New section—points to S6.5].
New section	New section	S7.1.2.10 Spacing to other lamps [New section—No requirement].
New section	New section	S7.2 Taillamps.
New section	New section	S7.2.1 Number [New section—points to Table I].
New section	New section	S7.2.2 Color of light [New section—points to Table I].
New section	New section	S7.2.3 Mounting location [New section—points to Table I and S6.1.3.2].
New section	New section	S7.2.4 Mounting height [New section—points to Table I].
New section	New section	S7.2.4 Mounting height [New section—points to Table I].
New section	New section	S7.2.5 Activation [New section—points to Table I].
New section	New section	S7.2.6 Effective projected luminous lens area [New section—No requirement].
New section	New section	S7.2.7 Visibility [New section—points to S6.4].
New section	New section	S7.2.8 Indicator [New section—No requirement].

APPENDIX A.—FMVSS NO. 108 REWRITE CROSS REFERENCE—Continued

Current FMVSS No. 108 or incorporated document citation	FMVSS No. 108 rewrite NPRM citation	FMVSS No. 108 rewrite final rule citation
New section	New section	S7.2.9 Markings [New section—points to S6.5].
New section	New section	S7.2.10 Spacing to other lamps [New section—No requirement].
New section	New section	S7.2.12 Ratio [New section—points to S7.1.2.12 and 7.3.12].
New section	New section	S7.3 Stop lamps.
New section	New section	S7.3.1 Number [New section—points to Table I].
New section	New section	S7.3.2 Color of light [New section—points to Table I].
New section	New section	S7.3.3 Mounting location [New section—points to Table I and S6.1.3.2].
New section	New section	S7.3.4 Mounting height [New section—points to Table I].
New section	New section	S7.3.5 Activation [New section—points to Table I].
New section	New section	S7.3.6 Effective projected luminous lens area [New section—points to Table IV–a].
New section	New section	S7.3.7 Visibility [New section—points to S6.4].
New section	New section	S7.3.8 Indicator [New section—No requirement].
New section	New section	S7.3.9 Markings [New section—points to S6.5].
New section	New section	S7.3.10 Spacing to other lamps [New section—No requirement].
New section	New section	S7.4 Side marker lamps.
New section	New section	S7.4.1 Number [New section—points to Table I].
New section	New section	S7.4.2 Color of light [New section—points to Table I].
New section	New section	S7.4.3 Mounting location [New section—points to Table I].
New section	New section	S7.4.5 Activation [New section—points to Table I].
New section	New section	S7.4.6 Effective projected luminous lens area [New section—No requirement].
New section	New section	S7.4.7 Visibility [New section—No requirement].
New section	New section	S7.4.8 Indicator [New section—No requirement].
New section	New section	S7.4.9 Markings [New section—points to S6.5].
New section	New section	S7.4.10 Spacing to other lamps [New section—No requirement].
New section	New section	S7.4.11 Multiple compartments and multiple lamps [New section—No requirement].
New section	New section	S7.4.12 Ratio [New section—No requirement].
New section	New section	S7.5 Clearance and identification lamps.
New section	New section	S7.5.1 Number [New section—points to Table I].
New section	New section	S7.5.2 Color of light [New section—points to Table I].
New section	New section	S7.5.3 Mounting location [New section—points to Table I].
New section	New section	S7.5.4 Mounting height [New section—points to Table I].
New section	New section	S7.5.5 Activation [New section—points to Table I].
New section	New section	S7.5.6 Effective projected luminous lens area [New section—No requirement].
New section	New section	S7.5.7 Visibility [New section—No requirement].
New section	New section	S7.5.8 Indicator [New section—No requirement].
New section	New section	S7.5.9 Markings [New section—points to S6.5].
New section	New section	S7.5.10 Spacing to other lamps [New section—No requirement].
New section	New section	S7.5.11 Multiple compartments and multiple lamps [New section—No requirement].

APPENDIX A.—FMVSS NO. 108 REWRITE CROSS REFERENCE—Continued

Current FMVSS No. 108 or incorporated document citation	FMVSS No. 108 rewrite NPRM citation	FMVSS No. 108 rewrite final rule citation
New section	New section	S7.5.12 Ratio.
New section	New section	S7.5.12.1 Clearance lamps [New section—points to S7.1.1.12 and S7.1.2.12].
New section	New section	S7.5.12.2 Identification lamps [New section—No requirement].
New section	New section	S7.6 Backup lamps.
New section	New section	S7.6.1 Number [New section—points to Table I].
New section	New section	S7.6.2 Color of light.
New section	New section	S7.6.2.1 [New section—points to Table I].
New section	New section	S7.6.3 Mounting location [New section—points to Table I].
New section	New section	S7.6.4 Mounting height [New section—No requirement].
New section	New section	S7.6.5 Activation [New section—points to Table I].
New section	New section	S7.6.6 Effective projected luminous lens area [New section—No requirement].
New section	New section	S7.6.7 Visibility [New section—see Table V–a].
New section	New section	S7.6.8 Indicator [New section—No requirement].
New section	New section	S7.6.9 Markings [New section—points to S6.5].
New section	New section	S7.6.10 Spacing to other lamps [New section—No requirement].
New section	New section	S7.6.11 Multiple compartments and multiple lamps [New section—No requirement].
New section	New section	S7.6.12 Ratio [New section—No requirement].
New section	New section	S7.7 License plate lamps.
New section	New section	S7.7.1 Number [New section—points to Table I and S6.1.1].
New section	New section	S7.7.2 Color of light [New section—points to Table I].
New section	New section	S7.7.3 Mounting location [New section—points to Table I].
New section	New section	S7.7.4 Mounting height [New section—No requirement].
New section	New section	S7.7.5 Activation [New section—points to Table I].
New section	New section	S7.7.6 Effective projected luminous lens area [New section—No requirement].
New section	New section	S7.7.7 Visibility [New section—No requirement].
New section	New section	S7.7.8 Indicator [New section—No requirement].
New section	New section	S7.7.9 Markings [New section—points to S6.5].
New section	New section	S7.7.10 Spacing to other lamps [New section—No requirement].
New section	New section	S7.7.11 Multiple compartments and multiple lamps [New section—No requirement].
New section	New section	S7.7.12 Ratio [New section—No requirement].
New section	New section	S7.7.15 Installation.
New section	New section	S7.8 Parking lamps.
New section	New section	S7.8.1 Number [New section—points to Table I].
New section	New section	S7.8.2 Color of light [New section—points to Table I].
New section	New section	S7.8.3 Mounting location [New section—points to Table I].
New section	New section	S7.8.4 Mounting height [New section—points to Table I].
New section	New section	S7.8.5 Activation [New section—points to Table I].
New section	New section	S7.8.6 Effective projected luminous lens area [New section—No requirement].
New section	New section	S7.8.7 Visibility [New section—points to S6.4].
New section	New section	S7.8.8 Indicator [New section—No requirement].

APPENDIX A.—FMVSS NO. 108 REWRITE CROSS REFERENCE—Continued

Current FMVSS No. 108 or incorporated document citation	FMVSS No. 108 rewrite NPRM citation	FMVSS No. 108 rewrite final rule citation
New section	New section	S7.8.9 Markings [New section—points to S6.5].
New section	New section	S7.8.10 Spacing to other lamps [New section—No requirement].
New section	New section	S7.8.11 Multiple compartments and multiple lamps [New section—No requirement].
New section	New section	S7.8.12 Ratio [New section—points to S7.1.1.12].
New section	New section	S7.9 High-mounted lamps.
New section	New section	S7.9.1 Number [New section—points to Table I and S6.1.1.2].
New section	New section	S7.9.2 Color of light [New section—points to Table I].
New section	New section	S7.9.3 Mounting location [New section—points to Table I].
New section	New section	S7.9.4 Mounting height [New section—points to Table I and S6.1.4.1].
New section	New section	S7.9.5 Activation [New section—points to Table I].
New section	New section	S7.9.6 Effective projected luminous lens area [New section—points to Table IV–b].
New section	New section	S7.9.7 Visibility [New section—points to Table V–a].
New section	New section	S7.9.8 Indicator [New section—No requirement].
New section	New section	S7.9.9 Markings [New section—points to S6.5].
New section	New section	S7.9.10 Spacing to other lamps [New section—No requirement].
New section	New section	S7.9.11 Multiple compartments and multiple lamps [New section—No requirement].
New section	New section	S7.9.12 Ratio [New section—No requirement].
New section	New section	S7.10 Daytime running lamps (DRLs).
New section	New section	S7.10.1 Number [New section—points to Table I].
New section	New section	S7.10.2 Color of light [New section—points to Table I].
New section	New section	S7.10.3 Mounting location [New section—points to Table I].
New section	New section	S7.10.4 Mounting height [New section—points to Table I and S7.10.13(b)].
New section	New section	S7.10.5 Activation [New section—points to Table I and S7.10.10.1(c)].
New section	New section	S7.10.6 Effective projected luminous lens area [New section—No requirement].
New section	New section	S7.10.7 Visibility [New section—No requirement].
New section	New section	S7.10.8 Indicator [New section—No requirement].
New section	New section	S7.10.9 Markings [New section—points to S6.5].
New section	New section	S7.10.11 Multiple compartments and multiple lamps [New section—No requirement].
New section	New section	S7.10.12 Ratio [New section—No requirement].
New section	New section	S7.11 School bus signal lamps.
New section	New section	S7.11.1 Number [New section—points to Table I].
New section	New section	S7.11.2 Color of light [New section—points to Table I].
New section	New section	S7.11.3 Mounting location [New section—points to Table I].
New section	New section	S7.11.4 Mounting height [New section—points to Table I].
New section	New section	S7.11.5 Activation [New section—points to Table I].
New section	New section	S7.11.6 Effective projected luminous lens area [New section—points to Table IV–c].
New section	New section	S7.11.7 Visibility [New section—points to Table V–a].

APPENDIX A.—FMVSS NO. 108 REWRITE CROSS REFERENCE—Continued

Current FMVSS No. 108 or incorporated document citation	FMVSS No. 108 rewrite NPRM citation	FMVSS No. 108 rewrite final rule citation
New section	New section	S7.11.8 Indicator [New section—No requirement].
New section	New section	S7.11.9 Markings [New section—points to S6.5].
New section	New section	S7.11.10 Spacing to other lamps [New section—No requirement].
New section	New section	S7.11.11 Multiple compartments and multiple lamps [New section—No requirement].
New section	New section	S7.11.12 Ratio [New section—No requirement].
New section	New section	S8.1.1 Number [New section—points to Table I].
New section	New section	S8.1.2 Color [New section—points to Table I].
New section	New section	S8.1.3 Mounting location [New section—points to Table I].
New section	New section	S8.1.4 Mounting height [New section—points to Table I].
New section	New section	S8.1.5 Activation [New section—No requirement].
New section	New section	S8.1.6 Effective projected luminous lens area [New section—No requirement].
New section	New section	S8.1.7 Visibility [New section—No requirement].
New section	New section	S8.1.8 Indicator [New section—No requirement].
New section	New section	S8.1.9 Markings [New section—points to S6.5].
New section	New section	S8.1.10 Spacing to other lamps [New section—No requirement].
New section	New section	S10.3 Number [New section—points to Table I].
New section	New section	S10.4 Color of light [New section—points to Table I].
New section	New section	S10.5 Mounting location [New section—points to Table I].
New section	New section	S10.6 Mounting height [New section—points to Table I].
New section	New section	S10.7 Activation [New section—points to Table I, Table II, and S6.1.5].
New section	New section	S10.8 Effective projected luminous lens area [New section—No requirement].
New section	New section	S10.9 Visibility [New section—No requirement].
New section	New section	S10.10 Indicator [New section—points to S9.5].
New section	New section	S10.11 Markings [New section—points to S6.5].
New section	New section	S10.12 Spacing to other lamps [New section—points to S6.1.3.5].
New table	New table	Table III Marking Requirements Locations [New Table—points to marking requirements].
New title	S6 Vehicle requirements	S6 Vehicle requirements.
New title	New title	S6.1.3 Mounting location.
New title	New title	S6.1.3.5 Headlamp beam mounting.
New title	S6.2 Impairment	S6.2 Impairment.
New title	S6.4 Visibility, and aiming	S6.4 Lens area, visibility, and aiming.
New title	S6.5 Marking	S6.5 Marking.
New title	S8.2 Simultaneous beam activation	S6.1.5.2 Simultaneous beam activation.
New title	New title	S6.6 Associated equipment.
New title	S7 Signal lamps, reflective devices, and associated equipment requirements.	S7 Signal lamp requirements.
New title	S7.1 Turn signal lamps	S7.1 Turn signal lamps.
New title	S7.1.1 Front turn signal lamps	S7.1.1 Front turn signal lamps.
New title	New title	S7.1.2 Rear turn signal lamps.
New title	S7.10 Reflex reflectors	S8.1 Reflex reflectors.
New title	Table III Application pattern	S8.2.1.4 Application pattern.
New title	New title	S9.1 Turn signal operating unit.
New title	New title	S9.2 Turn signal flasher.
New title	New title	S9.6 Vehicular hazard warning signal operating unit.

APPENDIX A.—FMVSS NO. 108 REWRITE CROSS REFERENCE—Continued

Current FMVSS No. 108 or incorporated document citation	FMVSS No. 108 rewrite NPRM citation	FMVSS No. 108 rewrite final rule citation
New title	New title	S9.7 Vehicular hazard warning signal flasher.
New title	New title	S9.8 Vehicular hazard warning signal pilot indicator.
New title	S7.14.8 Vehicular hazard warning signal pilot indicator.	S9.8.1 Two TS indicators.
New title	New title	S10.1 Vehicle headlighting systems.
New title	S9.4 Physical tests	S10.13.4 Physical tests.
New title	S10.7 Physical tests	S10.14.7 Physical tests.
New title	S11.5 Markings	S10.15.4 Markings.
New title	S12.3 Physical tests	S10.16.3 Physical tests.
New title	New title	S11.4 Physical tests.
New title	New title	S14 Physical and photometry test procedures and performance requirements.
New title	New title	S14.1 General test procedures and performance requirements.
New title	S6.8.5.1 Photometry ex headlamp, license lamp, & DRL.	S14.2.1 Photometry measurements for all lamps except license lamps, headlamps, and DRLs.
New title	S6.8.5.1.2 Multiple compartment & multiple lamp photometry.	S14.2.1.5 Multiple compartment and multiple lamp photometry of turn signal lamps, stop lamps, and taillamps.
New title	S6.8.5.5 Daytime running lamp (DRL) photometry measurements.	S14.2.4 Daytime running lamp (DRL) photometry measurements.
New title	S6.8.5.6 Headlamp photometry measurements.	S14.2.5 Headlamp photometry measurements.
New title	S6.8.5.6.2(c) Aiming—LB VOL/VOR vertical	S14.2.5.5.3 Visually aimable lower beam headlamps—vertical aim.
New title	S6.8.5.6.2(e) Aiming—UB VOL/VOR vertical	S14.2.5.5.5 Visually aimable upper beam headlamps—vertical aim.
New title	S6.8.5.6.2(f) Aiming—UB VOL/VOR horizontal	S14.2.5.5.6 Visually aimable upper beam headlamps—horizontal aim.
New title	S6.8.5.6.4 Photometer	S14.2.5.7 Photometer.
New title	S6.8.5.6.2(h) Aiming—Moveable reflector	S14.2.5.10 Moveable reflector aimed headlamp photometry measurements.
New title	New title	S14.4 General test procedures and performance requirements.
New title	New title	S14.4.1.2 General procedure.
New title	Table XXII Plastic optical material tests—application.	S14.4.2 Plastic optical materials tests.
New title	Table XXII	S14.5 Signal lamp and reflective device physical test procedures and performance requirements.
New title	Table XXIII	S14.6 Headlamp physical test procedures and performance requirements.
New title	Table XXIII Humidity test	S14.6.7 Humidity test.
New title	Table XXIII Humidity test—procedure	S14.6.7.1 Procedure.
New title	Table XXIII	S14.7 Replaceable light source physical test procedures and performance requirements.
New title	Table XXIII	S14.8 Vehicle headlamp aiming device (VHAD) physical test procedures and performance requirements.
New title	Table XXI	S14.9 Associated equipment physical test procedures and performance requirements.

APPENDIX B.—FMVSS NO. 108 REWRITE CROSS REFERENCE

Current FMVSS No. 108 or incorporated document citation	FMVSS No. 108 rewrite NPRM citation	FMVSS No. 108 rewrite final rule citation
S1 Scope	S1 Scope	S1; Table I; Table III.
S2 Purpose	S2 Purpose	S2 Purpose.
S3 Application	S3 Application	S3 Application (except section citation).
S4 Definitions	S4 Definitions	S4 Definitions.
S4 Definitions—Aiming plane	S4 Definitions—Aiming plane	SAE J1383, Apr 1985, 2.5.
S4 Definitions—Aiming reference plane	S4 Definitions—Aiming reference plane	S4 Definitions—Aiming reference plane.
S4 Definitions—Aiming screws	S4 Definitions—Aiming screws	SAE J580, Dec 1986, 2.4.
S4 Definitions—Axis of reference	S4 Definitions—Axis of reference	S4 Definitions—Axis of reference.
S4 Definitions—Backup lamp	S4 Definitions—Backup lamp	SAE J593c, Feb 1968.
S4 Definitions—Beam contributor	S4 Definitions—Beam contributor	S4 Definitions—Beam contributor.
S4 Definitions—Cargo lamp	S4 Definitions—Cargo lamp	S4 Definitions—Cargo lamp.

APPENDIX B.—FMVSS NO. 108 REWRITE CROSS REFERENCE—Continued

Current FMVSS No. 108 or incorporated document citation	FMVSS No. 108 rewrite NPRM citation	FMVSS No. 108 rewrite final rule citation
S4 Definitions—Clearance lamps	S4 Definitions—Clearance lamps	SAE J592e, Jul 1972, 2.1.
S4 Definitions—Coated materials	S4 Definitions—Coated materials	SAE J576, Jul 1991, 2.2.1.1.
S4 Definitions—Color	S4 Definitions—Color	SAE J578c, Feb 1977, 2.
S4 Definitions—Color bleeding	S4 Definitions—Color bleeding	SAE J576, Jul 1991, 2.2.3.1.
S4 Definitions—Combination clearance and side marker lamps.	S4 Definitions—Combination clearance and side marker lamps.	SAE J592e, Jul 1972, 2.3.
S4 Definitions—Cracking	S4 Definitions—Cracking	SAE J576, Jul 1991, 2.2.3.3.
S4 Definitions—Crazing	S4 Definitions—Crazing	SAE J576, Jul 1991, 2.2.3.2.
S4 Definitions—Cutoff	S4 Definitions—Cutoff	S4 Definitions—Cutoff.
S4 Definitions—Delamination	S4 Definitions—Delamination	SAE J576, Jul 1991, 2.2.3.5.
S4 Definitions—Design Voltage	S4 Definitions—Design Voltage	SAE J1383, Apr 1985, 2.10.
S4 Definitions—Direct reading indicator	S4 Definitions—Direct reading indicator	S4 Definitions—Direct reading indicator.
S4 Definitions—Effective light-emitting surface	S4 Definitions—Effective light-emitting surface	S4 Definitions—Effective light-emitting surface.
S4 Definitions—Effective projected luminous lens area.	S4 Definitions—Effective projected luminous lens area.	S4 Definitions—Effective projected luminous lens area.
S4 Definitions—Effective projected luminous lens area.	S4 Definitions—Effective projected luminous lens area.	S6.3.
S4 Definitions—Exposed	S4 Definitions—Exposed	SAE J576, Jul 1991, 2.2.2.1.
S4 Definitions—Filament	S4 Definitions—Filament	S4 Definitions—Filament.
S4 Definitions—Flash	S4 Definitions—Flash	S4 Definitions—Flash.
S4 Definitions—Fully opened	S4 Definitions—Fully opened	S4 Definitions—Fully opened.
S4 Definitions—Haze	S4 Definitions—Haze	SAE J576, Jul 1991, 2.2.3.4.
S4 Definitions—Headlamp	S4 Definitions—Headlamp	SAE J1383, Apr 1985, 2.1.
S4 Definitions—Headlamp concealment device	S4 Definitions—Headlamp concealment device.	S4 Definitions—Headlamp concealment device.
S4 Definitions—Headlamp mechanical axis	S4 Definitions—Headlamp mechanical axis	SAE J1383, Apr 1985, 2.6.
S4 Definitions—Headlamp test fixture	S4 Definitions—Headlamp test fixture	S4 Definitions—Headlamp test fixture.
S4 Definitions—High mounted stop lamp	S4 Definitions—High mounted stop lamp	SAE J186a, Sep 1977, 2.1.
S4 Definitions—H–V axis	S4 Definitions—H–V axis	SAE J1383, Apr 1985, 2.7.
S4 Definitions—Identification lamps	S4 Definitions—Identification lamps	SAE J592e, Jul 1972, 2.4.
S4 Definitions—Integral beam headlamp	S4 Definitions—Integral beam headlamp	S4 Definitions—Integral beam headlamp.
S4 Definitions—License plate lamps	S4 Definitions—License plate lamps	SAE J587, Oct 1981, 2.
S4 Definitions—Lower beam	S4 Definitions—Lower beam	SAE J1383, Apr 1985, 2.3.
S4 Definitions—Material	S4 Definitions—Material [OUT OF ALPHABETICAL ORDER].	SAE J576, Jul 1991, 2.2.1.
S4 Definitions—Mechanically aimable headlamp.	S4 Definitions—Mechanically aimable headlamp [OUT OF ALPHABETICAL ORDER].	SAE J1383, Apr 1985, 2.4.
S4 Definitions—Motor driven cycle	S4 Definitions—Motor driven cycle	SAE J584, Apr 1964.
S4 Definitions—Motorcycle or motor driven cycle headlamp.	S4 Definitions—Motorcycle or motor driven cycle headlamp.	SAE J584, Apr 1964.
S4 Definitions—Mounting ring	S4 Definitions—Mounting ring	SAE J580, Dec 1986, 2.2.
S4 Definitions—Mounting ring (type F sealed beam).	S4 Definitions—Mounting ring (type F sealed beam).	S7.3.7(e)(1).
S4 Definitions—Multiple compartment lamp	S4 Definitions—Multiple compartment lamp	S4 Definitions—Multiple compartment lamp.
S4 Definitions—Multiple lamp arrangement	S4 Definitions—Multiple lamp arrangement	S4 Definitions—Multiple lamp arrangement.
S4 Definitions—Optically combined	S4 Definitions—Optically combined	S5.1.1.11.
S4 Definitions—Optically combined	S4 Definitions—Optically combined	S5.4(b).
S4 Definitions—Optically combined	S4 Definitions—Optically combined	S5.4(c).
S4 Definitions—Optically combined	S4 Definitions—Optically combined	SAE J387, Nov 1987.
S4 Definitions—Overall width	S4 Definitions—Overall width	Interpretation—Camp 6/17/97.
S4 Definitions—Overall width	S4 Definitions—Overall width	Table IV, footnote 1.
S4 Definitions—Parking lamps	S4 Definitions—Parking lamps	SAE J222, Dec 1970, 2.
S4 Definitions—Protected	S4 Definitions—Protected	SAE J576, Jul 1991, 2.2.2.2.
S4 Definitions—Rated voltage	S4 Definitions—Rated voltage	SAE J1383, Apr 1985, 2.12.
S4 Definitions—Reflex reflectors	S4 Definitions—Reflex reflectors	SAE J594f, Jan 1977, 2.
S4 Definitions—Remote reading indicator	S4 Definitions—Remote reading indicator	S4 Definitions—Remote reading indicator.
S4 Definitions—Replaceable bulb headlamp	S4 Definitions—Replaceable bulb headlamp	S4 Definitions—Replaceable bulb headlamp.
S4 Definitions—Replaceable light source	S4 Definitions—Replaceable light source	S4 Definitions—Replaceable light source.
S4 Definitions—Retaining ring	S4 Definitions—Retaining ring	SAE J580, Dec 1986, 2.3.
S4 Definitions—Retaining ring (type F sealed beam).	S4 Definitions—Retaining ring (type F sealed beam).	S7.3.7(e)(2).
S4 Definitions—School bus signal lamps	S4 Definitions—School bus signal lamps	SAE J887, Jul 1964.
S4 Definitions—Sealed beam headlamp	S4 Definitions—Sealed beam headlamp	SAE J1383, Apr 1985, 2.1.1.
S4 Definitions—Sealed beam headlamp assembly.	S4 Definitions—Sealed beam headlamp assembly.	SAE J580, Dec 1986, 2.1.
S4 Definitions—Seasoning	S4 Definitions—Seasoning	SAE J1383, Apr 1985, 2.9.
S4 Definitions—Semiautomatic headlamp beam switching device.	S4 Definitions—Semiautomatic headlamp beam switching device.	SAE J565b, Feb 1969, 1.
S4 Definitions—Side marker lamps	S4 Definitions—Side marker lamps	SAE J592e, Jul 1972, 2.2.

APPENDIX B.—FMVSS NO. 108 REWRITE CROSS REFERENCE—Continued

Current FMVSS No. 108 or incorporated document citation	FMVSS No. 108 rewrite NPRM citation	FMVSS No. 108 rewrite final rule citation
S4 Definitions—Stop lamps	S4 Definitions—Stop lamps	SAE J1398, May 1985, 2.1.
S4 Definitions—Stop lamps	S4 Definitions—Stop lamps	SAE J586, Feb 1984, 2.1.
S4 Definitions—Taillamps	S4 Definitions—Taillamps	SAE J585e, Sep 1977, 2.1.
S4 Definitions—Test voltage	S4 Definitions—Test voltage	SAE J1383, Apr 1985, 2.11.
S4 Definitions—Turn signal flasher	S4 Definitions—Turn signal flasher	SAE J590b, Oct 1965.
S4 Definitions—Turn signal lamps	S4 Definitions—Turn signal lamps	SAE J1395, Apr 1985, 2.1.
S4 Definitions—Turn signal lamps	S4 Definitions—Turn signal lamps	SAE J588, Nov 1984, 2.1.
S4 Definitions—Turn signal operating unit	S4 Definitions—Turn signal operating unit	SAE J589, Apr 1964.
S4 Definitions—Upper beam	S4 Definitions—Upper beam	SAE J1383, Apr 1985, 2.2.
S4 Definitions—Vehicle headlamp aiming device or VHAD.	S4 Definitions—Vehicle headlamp aiming device or VHAD.	S4 Definitions—Vehicle headlamp aiming device or VHAD.
S4 Definitions—Vehicular hazard warning signal flasher.	S4 Definitions—Vehicular hazard warning signal flasher.	SAE J945, Feb 1966.
S4 Definitions—Vehicular hazard warning signal operating unit.	S4 Definitions—Vehicular hazard warning signal operating unit.	SAE J910, Jan 1966, 1.
S4 Definitions—Visually/optically aimable headlamp.	S4 Definitions—Visually/optically aimable headlamp.	S4 Definitions—Visually/optically aimable headlamp.
S5 References to SAE publications	S5 References to SAE publications	S6 Subreferenced SAE Standards and Recommended Practices.
S5.1 Recommended=mandatory	S5.1 Recommended=mandatory	S6.1.
S5.1 SAE Publications	S5.1 SAE Publications	S5.2.1.
S6 Vehicle requirements	S6 Vehicle requirements	New title.
S6.1 Required lamps, reflective devices, and associated equipment by vehicle type.	S6.1 Required lamps, reflective devices, and associated equipment by vehicle type.	Table I.
S6.1 Required lamps, reflective devices, and associated equipment by vehicle type.	S6.1 Required lamps, reflective devices, and associated equipment by vehicle type.	Table II.
S6.1 Required lamps, reflective devices, and associated equipment by vehicle type.	S6.1 Required lamps, reflective devices, and associated equipment by vehicle type.	Table III.
S6.1 Required lamps, reflective devices, and associated equipment by vehicle type.	S6.1 Required lamps, reflective devices, and associated equipment by vehicle type.	Table IV.
S6.1.1 Quantity	S6.1.1 Quantity	S5.1.1.
S6.1.1 Quantity	S6.1.1 Quantity	S5.1.1.10 Multiple license plate lamps and backup lamps.
S6.1.1 Quantity	S6.1.1 Quantity	Table I.
S6.1.1 Quantity	S6.1.1 Quantity	Table II.
S6.1.1 Quantity	S6.1.1 Quantity	Table III.
S6.1.1 Quantity	S6.1.1 Quantity	Table IV.
S6.1.1.1 Conspicuity systems	S6.1.1.1 Conspicuity systems	S5.7 Conspicuity systems.
S6.1.1.1 Conspicuity systems	S6.1.1.1 Conspicuity systems	S5.7.1 Retroreflective sheeting.
S6.1.1.2 High-mounted stop lamp	S6.1.1.2 High mounted stop lamp	S5.1.1.27(a).
S6.1.1.2 High-mounted stop lamp	S6.1.1.2 High mounted stop lamp	S5.1.1.27(b).
S6.1.1.2 High-mounted stop lamp	S6.1.1.2 High mounted stop lamp	S5.1.1.27(b)(1).
S6.1.1.2 High-mounted stop lamp	S6.1.1.2 High mounted stop lamp	S5.3.1.8(b).
S6.1.1.3 Truck tractor rear double faced turn signal lamps.	S6.1.1.3 Truck tractor rear turn signal lamps	S5.1.1.1 Truck tractor exemption; SAE J588e, Sep 1970, 3.9.1.
S6.1.1.3.1	SAE J588e, Sep 1970, 3.4	SAE J588e, Sep 1970, 3.4.
S6.1.1.4 Daytime running lamps (DRL)	S6.2.4 Daytime running lamps (DRL)	S5.5.11(a) Daytime running lamps (DRL).
S6.1.2 Color	S6.1.2 Color	S5.1.5.
S6.1.2 Color	S6.1.2 Color	Table I.
S6.1.2 Color	S6.1.2 Color	Table II.
S6.1.2 Color	S6.1.2 Color	Table III.
S6.1.2 Color	S6.1.2 Color	Table IV.
S6.1.3 Mounting location	New title	New title.
S6.1.3.1	S6.1.3 Mounting location and height	Interpretation—King 7/12/00.
S6.1.3.1	S6.1.3 Mounting location and height	S5.3.
S6.1.3.1	S6.1.3 Mounting location and height	Table II.
S6.1.3.1	S6.1.3 Mounting location and height	Table IV.
S6.1.3.2	S6.1.3 Mounting location and height	Interpretation—King 7/12/00.
S6.1.3.2	S6.1.3 Mounting location and height	S5.3.
S6.1.3.2	S6.1.3 Mounting location and height	Table II.
S6.1.3.2	S6.1.3 Mounting location and height	Table IV.
S6.1.3.3 License plate lamp	S6.1.4 License plate lamp	SAE J587, Oct 1981, 6.4.
S6.1.3.5 Headlamp beam mounting	New title	New title.
S6.1.3.5.1 Vertical headlamp arrangement	S8.1.3 Vertical headlamp arrangement	S7.4(b); S7.5(d).
S6.1.3.5.2 Horizontal headlamp arrangement	S8.1.4 Horizontal headlamp arrangement	S7.4(b); S7.5(d).
S6.1.3.5.3 Motorcycle headlamp arrangement	S8.1 Headlighting systems	S7.9.1(b).
S6.1.3.6 Auxiliary lamp	S6.2.5 Auxiliary identification lamps	Interpretation—Clarke 7/28/05.
S6.1.4 Mounting height	S6.1.3.1 Mounting height	Table II heading.
S6.1.4 Mounting height	S6.1.3.1 Mounting height	Table IV heading.
S6.1.4.1.1 High-mounted stop lamp mounting	S6.1.3.2.1 High mounted stop lamp mounting	S5.3.1.8(a)(2); Interpretation—Nakaya 6/18/85.

APPENDIX B.—FMVSS NO. 108 REWRITE CROSS REFERENCE—Continued

Current FMVSS No. 108 or incorporated document citation	FMVSS No. 108 rewrite NPRM citation	FMVSS No. 108 rewrite final rule citation
S6.1.4.1.2	S7.9.2 Interior mounting	S5.3.1.8(a)(3).
S6.1.4.1.2. High-mounted stop lamp reflections	S6.1.3.2.2. High mounted stop lamp reflections.	S5.3.1.8(a)(3).
S6.1.4.1.3 Accessibility	S7.9.1 High mounted stop lamp design	S5.1.1.27(a)(5).
S6.1.4.1.3 Accessibility	S7.9.1 High mounted stop lamp design	S5.1.1.27(b)(4).
S6.1.5 Activation	S6.1.5 Activation	S5.1.1.11 Stop lamp and turn signal lamp activation interaction.
S6.1.5 Activation	S6.1.5 Activation	S5.5.10(a).
S6.1.5 Activation	S6.1.5 Activation	S5.5.10(b).
S6.1.5 Activation	S6.1.5 Activation	S5.5.10(d).
S6.1.5 Activation	S6.1.5 Activation	S5.5.3.
S6.1.5 Activation	S6.1.5 Activation	S5.5.7.
S6.1.5.1 Hazard warning signal	S6.1.1.4 Hazard warning lamps	S5.5.5.
S6.1.5.2 Simultaneous beam activation	S8.2 Simultaneous beam activation	New title.
S6.1.5.2.1	S8.2 Simultaneous beam activation	S5.5.8.
S6.1.5.2.2	S8.2 Simultaneous beam activation	S5.5.8.
S6.1.5.2.3	S8.2 Simultaneous beam activation	S7.4(a)(1)(ii).
S6.2 Impairment	S6.2 Impairment	New title.
S6.2.1 Impairment due to additional lamps or reflective devices.	S6.2.1 Impairment due to additional lamps or reflective devices.	S5.1.3 Impairment.
S6.2.1 Impairment due to additional lamps or reflective devices.	S6.2.1 Impairment due to additional lamps or reflective devices.	S5.3.2(a).
S6.2.2 Lamp or reflective device obstructed	S6.2.2 Lamp or reflective device obstructed	Interpretation—Alkire 11/28/89.
S6.2.2 Lamp or reflective device obstructed	S6.2.2 Lamp or reflective device obstructed	S5.3.2.2.
S6.2.3 Headlamp obstructions	S14.2 Headlamp obstructions	S7.8.5.
S6.2.3.1 Coverings	S14.2 Headlamp obstructions	S7.8.5.
S6.2.3.2 Wipers	S14.2 Headlamp obstructions	S7.8.5.
S6.3 Equipment combinations	S6.3 Equipment combinations	S5.4 Equipment combinations.
S6.3.1 High mounted stop lamp and cargo lamp.	S6.3.1 High mounted stop lamp and cargo lamp.	S5.4(a).
S6.3.2 Optically combined HSML and cargo lamp prohibition.	S6.3.2 Optically combined HSML and cargo lamp prohibition.	S5.4(b).
S6.3.3. Clearance lamp and taillamp	S6.3.3. Clearance lamp and taillamp	S5.4(c).
S6.4 Lens area, visibility, and aiming	S6.4 Visibility, and aiming	New title.
S6.4.1 Effective projected luminous lens area requirements.	S6.4.1 Effective projected luminous lens area requirements.	S5.1.1.22 Motor driven cycle stop lamp exemptions.
S6.4.1 Effective projected luminous lens area requirements.	S6.4.1 Effective projected luminous lens area requirements.	S5.1.1.25 Motorcycle turn signal lamp EPLLA.
S6.4.1 Effective projected luminous lens area requirements.	S6.4.1 Effective projected luminous lens area requirements.	S5.1.1.26(a).
S6.4.1 Effective projected luminous lens area requirements.	S6.4.1 Effective projected luminous lens area requirements.	S5.1.1.26(b).
S6.4.1 Effective projected luminous lens area requirements.	S6.4.1 Effective projected luminous lens area requirements.	S5.1.1.27(a)(1).
S6.4.1 Effective projected luminous lens area requirements.	S6.4.1 Effective projected luminous lens area requirements.	S5.1.1.27(b)(1).
S6.4.1 Effective projected luminous lens area requirements.	S6.4.1 Effective projected luminous lens area requirements.	SAE J887, Jul 1964.
S6.4.2 Visibility	S6.4.2 Visibility	S5.3.2(c).
S6.4.2 Visibility	S6.4.2 Visibility	S5.3.2(d).
S6.4.2 Visibility	S6.4.2 Visibility	S5.3.2(e).
S6.4.2 Visibility	S6.4.2 Visibility	SAE J887, Jul 1964.
S6.4.3 Visibility requirement options	S6.4.3 Visibility options	S5.3.2(b).
S6.4.3(a) Lens area option	S6.4.3(a) Lens area option	S5.3.2(b)(1).
S6.4.3(b) Luminous intensity option	S6.4.3(b) Luminous intensity option	S5.3.2(b)(2).
S6.4.4 Legacy visibility option	S6.4.4 SAE visibility alternative to S6.4.3	S5.3.2.4.
S6.4.5 School bus signal lamp aiming	S6.4.6 School bus signal lamp aiming	SAE J887, Jul 1964.
S6.5 Marking	S6.5 Marking	New title.
S6.5.1 DOT marking	S6.5.1 DOT marking	S7.2(a).
S6.5.1 DOT marking	S6.5.1 DOT marking	S7.2(e).
S6.5.1.1 DOT marking—conspicuity sheeting	S6.5.1.1 DOT marking—conspicuity sheeting	S5.7.1.5 Certification.
S6.5.1.2 DOT marking—except headlamps	S6.5.1.2 DOT marking—except headlamps	S5.8.10.
S6.5.2 DRL marking	S6.5.2 DRL marking	S5.5.11(a)(2).
S6.5.3 Headlamp markings	S17 Headlamp marking requirements	Various.
S6.5.3.1 Trademark	S17.1 Trademark	S7.2(b).
S6.5.3.2 Voltage and trade number	S17.2 Voltage and trade number	S7.2(c).
S6.5.3.3 Sealed beam headlamp markings	S17.3 Sealed beam headlamp markings	S5.2.2.
S6.5.3.3 Sealed beam headlamp markings	S17.3 Sealed beam headlamp markings	S5.8.2.
S6.5.3.3 Sealed beam headlamp markings	S17.3 Sealed beam headlamp markings	S7.3.1.
S6.5.3.3 Sealed beam headlamp markings	S17.3 Sealed beam headlamp markings	S7.3.7(f).
S6.5.3.3 Sealed beam headlamp markings	S17.3 Sealed beam headlamp markings	S7.3.8(f).

APPENDIX B.—FMVSS NO. 108 REWRITE CROSS REFERENCE—Continued

Current FMVSS No. 108 or incorporated document citation	FMVSS No. 108 rewrite NPRM citation	FMVSS No. 108 rewrite final rule citation
S6.5.3.3 Sealed beam headlamp markings	S17.3 Sealed beam headlamp markings	S7.3.9(c).
S6.5.3.3 Sealed beam headlamp markings	S17.3 Sealed beam headlamp markings	SAE J1383, Apr 1985, 2.1.1.
S6.5.3.3 Sealed beam headlamp markings	S17.3 Sealed beam headlamp markings	SAE J1383, Apr 1985, 5.3.3.
S6.5.3.3 Sealed beam headlamp markings	S17.3 Sealed beam headlamp markings	SAE J1383, Apr 1985, 5.4.3.
S6.5.3.3 Sealed beam headlamp markings	S17.3 Sealed beam headlamp markings	SAE J1383, Apr 1985, 5.4.4.
S6.5.3.3 Sealed beam headlamp markings	S17.3 Sealed beam headlamp markings	SAE J1383, Apr 1985, 5.4.4.1.
S6.5.3.3 Sealed beam headlamp markings	S17.3 Sealed beam headlamp markings	SAE J1383, Apr 1985, 5.4.4.2.
S6.5.3.3 Sealed beam headlamp markings	S17.3 Sealed beam headlamp markings	SAE J1383, Apr 1985, 5.4.4.3.
S6.5.3.3 Sealed beam headlamp markings	S17.3 Sealed beam headlamp markings	SAE J1383, Apr 1985, 5.4.5.
S6.5.3.4 Replaceable bulb headlamp markings	S17.4 Replaceable bulb headlamp markings	S7.5(g).
S6.5.3.5 Additional headlamp markings	S17.5 Additional headlamp markings	New reference to other sections.
S6.6 Associated equipment	New title	New title.
S6.6.1 All except trailers	S6.6 Associated equipment	S5.1.1; Table I; Table III.
S6.6.2 All except trailers and motorcycles	S6.6 Associated equipment	S5.1.1; Table I; Table III.
S6.6.3 License plate holder	S6.6.1 License plate holder	SAE J587, Oct 1981, 6.1 and 6.2.
S6.7 Replacement equipment	S6.7 Replacement equipment	S5.8.1; S5.8.3; S5.8.4; S5.8.5; S5.8.6; S5.8.7; S5.8.8; S5.8.9.
S6.7.1 General requirements	S6.7.1 General requirements	70 FR 65972.
S6.7.1.1(a)	S6.7.1.1(a)	70 FR 65972.
S6.7.1.1(b)	S6.7.1.1(b)	70 FR 65972.
S6.7.1.2	S6.7.1.2	70 FR 65972.
S6.7.1.3	S6.7.1.3	70 FR 65972.
S6.7.2 Version of this Standard	S6.7.2 Version of this Standard	70 FR 65972.
S7 Signal lamp requirements	S7 Signal lamps, reflective devices, and associated equipment requirements.	New title.
S7.1 Turn signal lamps	S7.1 Turn signal lamps	New title.
S7.1.1 Front turn signal lamps	S7.1.1 Front turn signal lamps	New title.
S7.1.1.1 Number [New section—points to Table I].	New section	New section.
S7.1.1.2 Color of light [New section—points to Table I].	New section	New section.
S7.1.1.3 Mounting location [New section—points to Table I].	New section	New section.
S7.1.1.4 Mounting height [New section—points to Table I].	New section	New section.
S7.1.1.5 Activation [New section—points to Table I].	New section	New section.
S7.1.1.6 Effective projected luminous lens area [New section—points to Table IV–a].	New section	New section.
S7.1.1.7 Visibility [New section—points to S6.4]	New section	New section.
S7.1.1.8 Indicator [New section—points to S9.3	New section	New section.
S7.1.1.9 Markings [New section—points to S6.5].	New section	New section.
S7.1.1.10 Spacing to other lamps	S7.1.1.2 Spacing to other lamps	SAE J588, Nov 1984, 5.1.5.4.
S7.1.1.10.1	S7.1.1.2 Spacing to other lamps	SAE J588, Nov 1984, 5.1.5.4.
S7.1.1.10.2 Spacing measurement for non-reflector lamps.	S7.1.1.2.1 Spacing measurement for non reflector lamps.	SAE J588, Nov 1984, 5.1.5.4.1; SAE J1395, Apr 1985, 5.1.5.5.
S7.1.1.10.3 Spacing measurement for lamps with reflectors.	S7.1.1.2.2 Spacing measurement for lamps with reflectors.	SAE J588, Nov 1984, 5.1.5.4.2; SAE J1395, Apr 1985, 5.1.5.6.
S7.1.1.10.4 Spacing based photometric multipliers.	S7.1.1.2.3 Spacing based photometric multipliers.	S5.3.1.7; SAE J588, Nov 1984, Table 2.
S7.1.1.11 Multiple compartments and multiple lamps.	S7.1.1.3 Multiple compartments and multiple lamps.	SAE J588, Nov 1984, 5.1.5.2.
S7.1.1.11.1	S7.1.1.3 Multiple compartments and multiple lamps.	SAE J588, Nov 1984, 5.1.5.2.
S7.1.1.11.2	S7.1.1.3 Multiple compartments and multiple lamps.	SAE J588, Nov 1984, 5.1.5.2.
S7.1.1.11.3	S7.1.1.3 Multiple compartments and multiple lamps.	SAE J588, Nov 1984, 5.1.5.2.
S7.1.1.11.4 Lamps installed on vehicles 2032 mm or more in overall width.	S7.1.1.3.1 Lamps installed on vehicles 2032 mm or more in overall width.	S5.1.1.12.
S7.1.1.12 Ratio to parking lamps and clearance lamps.	S7.1.1.3.2 Ratio to parking lamps and clearance lamps.	SAE J588, Nov 1984, 5.1.5.3; SAE J1395, Apr 1985, 5.1.5.2.
S7.1.1.12.1	S7.1.1.3.2 Ratio to parking lamps and clearance lamps.	SAE J588, Nov 1984, 5.1.5.3; SAE J1395, Apr 1985, 5.1.5.2.
S7.1.1.12.2	S7.1.1.3.2 Ratio to parking lamps and clearance lamps.	SAE J588, Nov 1984, 5.1.5.3; SAE J1395, Apr 1985, 5.1.5.2.
S7.1.1.12.3	S7.1.1.3.2 Ratio to parking lamps and clearance lamps.	SAE J588, Nov 1984, 5.1.5.3; SAE J1395, Apr 1985, 5.1.5.2.
S7.1.1.12.4	S7.1.1.3.2 Ratio to parking lamps and clearance lamps.	SAE J588, Nov 1984, 5.1.5.3; SAE J1395, Apr 1985, 5.1.5.2.

APPENDIX B.—FMVSS NO. 108 REWRITE CROSS REFERENCE—Continued

Current FMVSS No. 108 or incorporated document citation	FMVSS No. 108 rewrite NPRM citation	FMVSS No. 108 rewrite final rule citation
S7.1.1.13 Photometry	S7.1.1.1 Photometry	S5.1.1.7; SAE J588, Nov 1984, Table 1; SAE J1395, Apr 1985, Table 1.
S7.1.1.13.1	S7.1.1.1 Photometry	S5.1.1.7; SAE J588, Nov 1984, Table 1; SAE J1395, Apr 1985, Table 1.
S7.1.1.13.2	S7.1.1.1 Photometry	S5.1.1.7; SAE J588, Nov 1984, Table 1; SAE J1395, Apr 1985, Table 1.
S7.1.1.14 Physical tests	S7.1.3 Physical tests	S5.1.2; S5.1.5; S6.2; SAE J588, Nov 1984, 4; SAE J1395, Apr 1985, 4.
S7.1.2 Rear turn signal lamps	New title	New title.
S7.1.2.1 Number [New section—points to Table I].	New section	New section.
S7.1.2.2 Color of light [New section—points to Table I].	New section	New section.
S7.1.2.3 Mounting location [New section—points to Table I and S6.1.3.2].	New section	New section.
S7.1.2.4 Mounting height [New section—points to Table I].	New section	New section.
S7.1.2.5 Activation [New section—points to Table I].	New section	New section.
S7.1.2.6 Effective projected luminous lens area [New section—points to Table IV–a].	New section	New section.
S7.1.2.7 Visibility [New section—points to S6.4]	New section	New section.
S7.1.2.8 Indicator [New section—points to S9.3].	New section	New section.
S7.1.2.9 Markings [New section—points to S6.5].	New section	New section.
S7.1.2.10 Spacing to other lamps [New section—No requirement].	New section	New section.
S7.1.2.11 Multiple compartments and multiple lamps.	S7.1.2.2 Multiple compartments and multiple lamps.	SAE J588, Nov 1984, 5.1.5.2.
S7.1.2.11.1	S7.1.2.2 Multiple compartments and multiple lamps.	SAE J588, Nov 1984, 5.1.5.2.
S7.1.2.11.2	S7.1.2.2 Multiple compartments and multiple lamps.	SAE J588, Nov 1984, 5.1.5.2.
S7.1.2.11.3	S7.1.2.2 Multiple compartments and multiple lamps.	SAE J588, Nov 1984, 5.1.5.2.
S7.1.2.11.4 Lamps installed on vehicles 2032 mm or more in overall width.	S7.1.2.2.1 Lamps installed on vehicles 2032 mm or more in overall width.	S5.1.1.12.
S7.1.2.12 Ratio to taillamps and clearance lamps.	S7.1.2.3 Ratio to taillamps and clearance lamps.	SAE J588, Nov 1984, 5.1.5.3; SAE J1395, Apr 1985, Table 1.
S7.1.2.12.1	S7.1.2.3 Ratio to taillamps and clearance lamps.	SAE J588, Nov 1984, 5.1.5.3; SAE J1395, Apr 1985, Table 1.
S7.1.2.12.2	S7.1.2.3 Ratio to taillamps and clearance lamps.	SAE J588, Nov 1984, 5.1.5.3.
S7.1.2.12.3	S7.1.2.3 Ratio to taillamps and clearance lamps.	SAE J588, Nov 1984, 5.1.5.3.
S7.1.2.12.4	S7.1.2.3 Ratio to taillamps and clearance lamps.	SAE J588, Nov 1984, 5.1.5.3; SAE J1395, Apr 1985, Table 1.
S7.1.2.13 Photometry	S7.1.2.1 Photometry	SAE J588, Nov 1984, Table 1; SAE J1395, Apr 1985, Table 1.
S7.1.2.13.1	S7.1.2.1 Photometry	SAE J588, Nov 1984, Table 1; SAE J1395, Apr 1985, Table 1.
S7.1.2.13.2 Motorcycle alternative	S7.1.2.1 Photometry	S5.1.1.7 Motorcycle turn signal lamp.
S7.1.2.14 Physical tests	S7.1.3 Physical tests	S5.1.2; S5.1.5; S6.2; SAE J588, Nov 1984, 4; SAE J1395, Apr 1985, 5.3.1.
S7.1.3 Combined lamp bulb indexing	S7.1.4 Combined lamp bulb indexing	SAE J588, Nov 1984, 5.3.1; SAE J1395, Apr 1985, 5.3.1.
S7.1.3.1 Dual filament bulbs	S7.1.4 Combined lamp bulb indexing	SAE J588, Nov 1984, 5.3.1; SAE J1395, Apr 1985, 5.3.1.
S7.1.3.2 Socket indexing	S7.1.4 Combined lamp bulb indexing	SAE J588, Nov 1984, 5.3.1; SAE J1395, Apr 1985, 5.3.1.
S7.2 Taillamps	New section	New section.
S7.2.1 Number [New section—points to Table I].	New section	New section.
S7.2.2 Color of light [New section—points to Table I].	New section	New section.
S7.2.3 Mounting location [New section—points to Table I and S6.1.3.2].	New section	New section.
S7.2.4 Mounting height [New section—points to Table I].	New section	New section.

APPENDIX B.—FMVSS NO. 108 REWRITE CROSS REFERENCE—Continued

Current FMVSS No. 108 or incorporated document citation	FMVSS No. 108 rewrite NPRM citation	FMVSS No. 108 rewrite final rule citation
S7.2.4 Mounting height [New section—points to Table I].	New section	New section.
S7.2.5 Activation [New section—points to Table I].	New section	New section.
S7.2.6 Effective projected luminous lens area [New section—No requirement].	New section	New section.
S7.2.7 Visibility [New section—points to S6.4]	New section	New section.
S7.2.8 Indicator [New section—No requirement].	New section	New section.
S7.2.9 Markings [New section—points to S6.5]	New section	New section.
S7.2.10 Spacing to other lamps [New section—No requirement].	New section	New section.
S7.2.11 Multiple compartments and multiple lamps.	S7.2.1.1 Multiple compartments and multiple lamps.	SAE J585e, Sep 1977, 3.1.
S7.2.11.1	S7.2.1.1 Multiple compartments and multiple lamps.	SAE J585e, Sep 1977, 3.1.
S7.2.11.2	S7.2.1.1 Multiple compartments and multiple lamps.	SAE J585e, Sep 1977, 3.1.
S7.2.11.3	S7.2.1.1 Multiple compartments and multiple lamps.	SAE J585e, Sep 1977, 3.1.
S7.2.11.4 Taillamps installed on vehicles 2032 mm. or more in overall width.	S7.2.1.1.1 Lamps installed on vehicles 2032 mm or more in overall width.	SAE J585e, Sep 1977, 3.1.
S7.2.12 Ratio [New section—points to S7.1.2.12 and 7.3.12].	New section	New section.
S7.2.13 Photometry	S7.2.1 Photometry	S5.1.1.6; Figure 1a; Figure 1b; Figure 1c.
S7.2.14 Physical tests	S7.2.2 Physical tests	S5.1.2; S5.1.5; S6.2; SAE J585e, Sep 1977, 3.
S7.3 Stop lamps	New section	New section.
S7.3.1 Number [New section—points to Table I].	New section	New section.
S7.3.2 Color of light [New section—points to Table I].	New section	New section.
S7.3.3 Mounting location [New section—points to Table I and S6.1.3.2].	New section	New section.
S7.3.4 Mounting height [New section—points to Table I].	New section	New section.
S7.3.5 Activation [New section—points to Table I].	New section	New section.
S7.3.6 Effective projected luminous lens area [New section—points to Table IV–a].	New section	New section.
S7.3.7 Visibility [New section—points to S6.4]	New section	New section.
S7.3.8 Indicator [New section—No requirement].	New section	New section.
S7.3.9 Markings [New section—points to S6.5]	New section	New section.
S7.3.10 Spacing to other lamps [New section—No requirement].	New section	New section.
S7.3.11 Multiple compartments and multiple lamps.	S7.3.1.1 Multiple compartments and multiple lamps.	SAE J586, Feb 1984, 5.1.5.2.
S7.3.11.1	S7.3.1.1 Multiple compartments and multiple lamps.	SAE J586, Feb 1984, 5.1.5.2.
S7.3.11.2	S7.3.1.1 Multiple compartments and multiple lamps.	SAE J586, Feb 1984, 5.1.5.2.
S7.3.11.3	S7.3.1.1 Multiple compartments and multiple lamps.	SAE J586, Feb 1984, 5.1.5.2.
S7.3.11.4 Lamps installed on vehicles 2032 mm or more in overall width.	S7.3.1.1.1 Lamps installed on vehicles 2032 mm or more in overall width.	S5.1.1.12.
S7.3.12 Ratio to taillamps	S7.3.1.2 Ratio to taillamps	SAE J586, Feb 1984, 5.1.5.3; SAE J1398, May 1985, 5.1.5.2.
S7.3.12.1	S7.3.1.2 Ratio to taillamps	SAE J586, Feb 1984, 5.1.5.3; SAE J1398, May 1985, 5.1.5.2.
S7.3.12.2	S7.3.1.2 Ratio to taillamps	SAE J586, Feb 1984, 5.1.5.3; SAE J1398, May 1985, 5.1.5.2.
S7.3.12.3	S7.3.1.2 Ratio to taillamps	SAE J586, Feb 1984, 5.1.5.3; SAE J1398, May 1985, 5.1.5.2.
S7.3.12.4	S7.3.1.2 Ratio to taillamps	SAE J586, Feb 1984, 5.1.5.3; SAE J1398, May 1985, 5.1.5.2.
S7.3.13 Photometry	S7.3.1 Photometry	SAE J586, Feb 1984, Table 1; SAE J1398, May 1985, Table 1.
S7.3.13.1	S7.3.1 Photometry	SAE J586, Feb 1984, Table 1; SAE J1398, May 1985, Table 1.

APPENDIX B.—FMVSS NO. 108 REWRITE CROSS REFERENCE—Continued

Current FMVSS No. 108 or incorporated document citation	FMVSS No. 108 rewrite NPRM citation	FMVSS No. 108 rewrite final rule citation
S7.3.13.2 Motor driven cycle alternative	S7.3.1 Photometry	S5.1.1.22 Motor driven cycle stop lamp exemptions.
S7.3.14 Physical tests	S7.3.2 Physical tests	S5.1.2; S5.1.5; S6.2; SAE J586, Feb 1984, 5; SAE J1398, May 1985, 5.
S7.3.15 Combined lamp bulb indexing	S7.3.3 Combined lamp bulb indexing	SAE J586, Feb 1984, 5.3.1; SAE J1398, May 1985, 5.3.1.
S7.3.15.1 Dual filament bulbs	S7.3.3 Combined lamp bulb indexing	SAE J586, Feb 1984, 5.3.1; SAE J1398, May 1985, 5.3.1.
S7.3.15.2 Socket indexing	S7.3.3 Combined lamp bulb indexing	SAE J586, Feb 1984, 5.3.1; SAE J1398, May 1985, 5.3.1.
S7.4 Side marker lamps	New section	New section.
S7.4.1 Number [New section—points to Table I].	New section	New section.
S7.4.2 Color of light [New section—points to Table I].	New section	New section.
S7.4.3 Mounting location [New section—points to Table I].	New section	New section.
S7.4.5 Activation [New section—points to Table I].	New section	New section.
S7.4.6 Effective projected luminous lens area [New section—No requirement].	New section	New section.
S7.4.7 Visibility [New section—No requirement]	New section	New section.
S7.4.8 Indicator [New section—No requirement].	New section	New section.
S7.4.9 Markings [New section—points to S6.5]	New section	New section.
S7.4.10 Spacing to other lamps [New section—No requirement].	New section	New section.
S7.4.11 Multiple compartments and multiple lamps [New section—No requirement].	New section	New section.
S7.4.12 Ratio [New section—No requirement]	New section	New section.
S7.4.13 Photometry	S7.4.1 Photometry	SAE J592e, Jul 1972, Table 1.
S7.4.13.1	S7.4.1 Photometry	SAE J592e, Jul 1972, Table 1.
S7.4.13.2 Inboard photometry	S7.4.1.1 Inboard photometry	S5.1.1.3; S5.1.1.8; SAE J592e, Jul 1972, Table 1, footnote b.
S7.4.14 Physical tests	S7.4.2 Physical tests	S5.1.2; S5.1.5; S6.2; SAE J592e, Jul 1972, 3.
S7.5 Clearance and identification lamps	New section	New section.
S7.5.1 Number [New section—points to Table I].	New section	New section.
S7.5.2 Color of light [New section—points to Table I].	New section	New section.
S7.5.3 Mounting location [New section—points to Table I].	New section	New section.
S7.5.4 Mounting height [New section—points to Table I].	New section	New section.
S7.5.5 Activation [New section—points to Table I].	New section	New section.
S7.5.6 Effective projected luminous lens area [New section—No requirement].	New section	New section.
S7.5.7 Visibility [New section—No requirement]	New section	New section.
S7.5.8 Indicator [New section—No requirement].	New section	New section.
S7.5.9 Markings [New section—points to S6.5]	New section	New section.
S7.5.10 Spacing to other lamps [New section—No requirement].	New section	New section.
S7.5.11 Multiple compartments and multiple lamps [New section—No requirement].	New section	New section.
S7.5.12 Ratio	New section	New section.
S7.5.12.1 Clearance lamps [New section—points to S7.1.1.12 and S7.1.2.12].	New section	New section.
S7.5.12.2 Identification lamps [New section—No requirement].	New section	New section.
S7.5.13 Photometry	S7.5.1 Photometry	SAE J592e, Jul 1972, Table 1.
S7.5.14 Physical tests	S7.5.2 Physical tests	S5.1.2; S5.1.5; S6.2; SAE J592e, Jul 1972, 3.
S7.6 Backup lamps	New section	New section.
S7.6.1 Number [New section—points to Table I].	New section	New section.
S7.6.2 Color of light	New section	New section.
S7.6.2.1 [New section—points to Table I]	New section	New section.
S7.6.2.2 Incidental light	S7.6.2 Color	SAE J593c, Feb 1968.
S7.6.3 Mounting location [New section—points to Table I].	New section	New section.

APPENDIX B.—FMVSS NO. 108 REWRITE CROSS REFERENCE—Continued

Current FMVSS No. 108 or incorporated document citation	FMVSS No. 108 rewrite NPRM citation	FMVSS No. 108 rewrite final rule citation
S7.6.4 Mounting height [New section—No requirement].	New section	New section.
S7.6.5 Activation [New section—points to Table I].	New section	New section.
S7.6.6 Effective projected luminous lens area [New section—No requirement].	New section	New section.
S7.6.7 Visibility [New section—see Table V–a]	New section	New section.
S7.6.8 Indicator [New section—No requirement].	New section	New section
S7.6.9 Markings [New section—points to S6.5]	New section	New section.
S7.6.10 Spacing to other lamps [New section—No requirement].	New section	New section.
S7.6.11 Multiple compartments and multiple lamps [New section—No requirement].	New section	New section.
S7.6.12 Ratio [New section—No requirement]	New section	New section.
S7.6.13 Photometry	S7.6.1 Photometry	Figure 2.
S7.6.14 Physical tests	S7.6.3 Physical tests	S5.1.2; S5.1.5; S6.2;SAE J593c, Feb 1968.
S7.7 License plate lamps	New section	New section.
S7.7.1 Number [New section—points to Table I and S6.1.1].	New section	New section.
S7.7.2 Color of light [New section—points to Table I].	New section	New section.
S7.7.3 Mounting location [New section—points to Table I].	New section	New section.
S7.7.4 Mounting height [New section—No requirement].	New section	New section.
S7.7.5 Activation [New section—points to Table I].	New section	New section.
S7.7.6 Effective projected luminous lens area [New section—No requirement].	New section	New section.
S7.7.7 Visibility [New section—No requirement]	New section	New section.
S7.7.8 Indicator [New section—No requirement].	New section	New section.
S7.7.9 Markings [New section—points to S6.5]	New section	New section.
S7.7.10 Spacing to other lamps [New section—No requirement].	New section	New section.
S7.7.11 Multiple compartments and multiple lamps [New section—No requirement].	New section	New section.
S7.7.12 Ratio [New section—No requirement]	New section	New section.
S7.7.13 Photometry	S7.7.2 Photometry requirements	SAE J587, Oct 1981, 7.
S7.7.13. Ratio—motorcycles and motor driven cycles.	S7.7.2 Photometry requirements	SAE J587, Oct 1981, 7.
S7.7.13.1	S7.7.2 Photometry requirements	SAE J587, Oct 1981, 7.
S7.7.13.2 Illumination	S7.7.2 Photometry requirements	SAE J587, Oct 1981, 7.
S7.7.13.3 Ratio except motorcycles and motor driven cycles.	S7.7.2 Photometry requirements	SAE J587, Oct 1981, 7.
S7.7.14 Physical tests	S7.7.3 Physical tests	S5.1.2; S5.1.5; S6.2; SAE J587, Oct 1981, 3, 4, and 5.
S7.7.15 Installation	New section	New section.
S7.7.15.1	S7.7.1 Installation	SAE J587, Oct 1981, 6.3.
S7.7.15.2	S7.7.1 Installation	SAE J587, Oct 1981, 6.3.
S7.7.15.3	S7.7.1 Installation	SAE J587, Oct 1981, 6.3.
S7.7.15.4 Incident light from a single lamp	S7.7.1.1 Incident light from a single lamp	SAE J587, Oct 1981, 6.5.
S7.7.15.5 Incident light from multiple lamps	S7.7.1.2 Incident light from multiple lamps	SAE J587, Oct 1981, 6.6.
S7.8 Parking lamps	New section	New section.
S7.8.1 Number [New section—points to Table I].	New section	New section.
S7.8.2 Color of light [New section—points to Table I].	New section	New section.
S7.8.3 Mounting location [New section—points to Table I].	New section	New section.
S7.8.4 Mounting height [New section—points to Table I].	New section	New section.
S7.8.5 Activation [New section—points to Table I].	New section	New section.
S7.8.6 Effective projected luminous lens area [New section—No requirement].	New section	New section.
S7.8.7 Visibility [New section—points to S6.4]	New section	New section.
S7.8.8 Indicator [New section—No requirement].	New section	New section.
S7.8.9 Markings [New section—points to S6.5]	New section	New section.

APPENDIX B.—FMVSS NO. 108 REWRITE CROSS REFERENCE—Continued

Current FMVSS No. 108 or incorporated document citation	FMVSS No. 108 rewrite NPRM citation	FMVSS No. 108 rewrite final rule citation
S7.8.10 Spacing to other lamps [New section—No requirement].	New section	New section.
S7.8.11 Multiple compartments and multiple lamps [New section—No requirement].	New section	New section.
S7.8.12 Ratio [New section—points to S7.1.1.12].	New section	New section.
S7.8.13 Photometry	S7.8.1 Photometry	S5.1.1.6; Figure 1a; Figure 1b; Figure 1c.
S7.8.14 Physical tests	S7.8.2 Physical tests	S5.1.2; S5.1.5; S6.2; SAE J222, Dec 1970, 3.
S7.9 High-mounted lamps	New section	New section.
S7.9.1 Number [New section—points to Table I and S6.1.1.2].	New section	New section.
S7.9.2 Color of light [New section—points to Table I].	New section	New section.
S7.9.3 Mounting location [New section—points to Table I].	New section	New section.
S7.9.4 Mounting height [New section—points to Table I and S6.1.4.1].	New section	New section.
S7.9.5 Activation [New section—points to Table I].	New section	New section.
S7.9.6 Effective projected luminous lens area [New section—points to Table IV–b].	New section	New section.
S7.9.7 Visibility [New section—points to Table V–a].	New section	New section.
S7.9.8 Indicator [New section—No requirement].	New section	New section.
S7.9.9 Markings [New section—points to S6.5]	New section	New section.
S7.9.10 Spacing to other lamps [New section—No requirement].	New section	New section.
S7.9.11 Multiple compartments and multiple lamps [New section—No requirement].	New section	New section.
S7.9.12 Ratio [New section—No requirement]	New section	New section.
S7.9.13 Photometry	S7.9.3 Photometry	S5.1.1.27(a)(3) and (b)(3); Figure 10.
S7.9.14 Physical tests	S7.9.4 Physical tests	S5.1.1.27(a)(4); S5.1.2; S5.1.5; S6.2; SAE J186a, Sep 1977, 3.
S7.9.14.1 External mount	S7.9.4 Physical tests	S5.1.1.27(a)(4); S5.1.2; S5.1.5; S6.2; SAE J186a, Sep 1977, 3.
S7.9.14.2 Internal mount	S7.9.4 Physical tests	S5.1.1.27(a)(4); S5.1.2; S5.1.5; S6.2; SAE J186a, Sep 1977, 3.
S7.10 Daytime running lamps (DRLs)	New section	New section.
S7.10.1 Number [New section—points to Table I].	New section	New section.
S7.10.2 Color of light [New section—points to Table I].	New section	New section.
S7.10.3 Mounting location [New section—points to Table I].	New section	New section.
S7.10.4 Mounting height [New section—points to Table I and S7.10.13(b)].	New section	New section.
S7.10.5 Activation [New section—points to Table I and S7.10.10.1(c)].	New section	New section.
S7.10.6 Effective projected luminous lens area [New section—No requirement].	New section	New section.
S7.10.7 Visibility [New section—No requirement].	New section	New section.
S7.10.8 Indicator [New section—No requirement].	New section	New section.
S7.10.9 Markings [New section—points to S6.5].	New section	New section.
S7.10.10 Spacing to other lamps	S7.11.2 Spacing to turn signal lamps	S5.5.11(a)(4).
S7.10.10.1(a)	S7.11.2.2(a) Not optically combined with turn signal lamp.	S5.5.11(a)(4)(i).
S7.10.10.1(b)	S7.11.2.2(b) Not optically combined with turn signal lamp.	S5.5.11(a)(4)(iii).
S7.10.10.1(c)	S7.11.2.2(c) Not optically combined with turn signal lamp.	S5.5.11(a)(4)(iv).
S7.10.11 Multiple compartments and multiple lamps [New section—No requirement].	New section	New section.
S7.10.12 Ratio [New section—No requirement]	New section	New section.
S7.10.13 Photometry	S7.11.1 Photometry	S5.5.11(a)(1).
S7.10.13(a)	S7.11.1(a)	S5.5.11(a)(1)(i).
S7.10.13(b)	S7.11.1(b)	S5.5.11(a)(1)(ii).
S7.10.14 Physical tests	S7.11.3 Physical tests	S5.1.2; S5.1.5; S5.5.11(a)(3); S6.2.

APPENDIX B.—FMVSS NO. 108 REWRITE CROSS REFERENCE—Continued

Current FMVSS No. 108 or incorporated document citation	FMVSS No. 108 rewrite NPRM citation	FMVSS No. 108 rewrite final rule citation
S7.11 School bus signal lamps	New section	New section.
S7.11.1 Number [New section—points to Table I].	New section	New section.
S7.11.2 Color of light [New section—points to Table I].	New section	New section.
S7.11.3 Mounting location [New section—points to Table I].	New section	New section.
S7.11.4 Mounting height [New section—points to Table I].	New section	New section.
S7.11.5 Activation [New section—points to Table I].	New section	New section.
S7.11.6 Effective projected luminous lens area [New section—points to Table IV–c].	New section	New section.
S7.11.7 Visibility [New section—points to Table V–a].	New section	New section.
S7.11.8 Indicator [New section—No requirement].	New section	New section.
S7.11.9 Markings [New section—points to S6.5].	New section	New section.
S7.11.10 Spacing to other lamps [New section—No requirement].	New section	New section.
S7.11.11 Multiple compartments and multiple lamps [New section—No requirement].	New section	New section.
S7.11.12 Ratio [New section—No requirement]	New section	New section.
S7.11.13 Photometry	S7.13.1 Photometry	S5.1.4(b); SAE J887, Jul 1964, Table 1.
S7.11.14 Physical tests	S7.13.2 Physical test requirements	S5.1.2; S5.1.5; S6.2; SAE J887, Jul 1964.
S8.1 Reflex reflectors	S7.10 Reflex reflectors	New title.
S8.1.1 Number [New section—points to Table I].	New section	New section.
S8.1.2 Color [New section—points to Table I]	New section	New section.
S8.1.3 Mounting location [New section—points to Table I].	New section	New section.
S8.1.4 Mounting height [New section—points to Table I].	New section	New section.
S8.1.5 Activation [New section—No requirement].	New section	New section.
S8.1.6 Effective projected luminous lens area [New section—No requirement].	New section	New section.
S8.1.7 Visibility [New section—No requirement]	New section	New section.
S8.1.8 Indicator [New section—No requirement].	New section	New section.
S8.1.9 Markings [New section—points to S6.5]	New section	New section.
S8.1.10 Spacing to other lamps [New section—No requirement].	New section	New section.
S8.1.11 Photometry	S7.10.1 Photometry	SAE J594f, Jan 1977, Table 1 and Table 1A.
S8.1.12 Physical tests	S7.10.2 Physical tests	S5.1.2; S5.1.5; S6.2; SAE J594f, Jan 1977, 3.
S8.1.13 Alternative side reflex reflector material	S7.10.1.1 Alternative side reflex reflectors	S5.1.1.4 Alternative side reflex material: SAE J594f, Jan 1977, Table 1 and Table 1A.
S8.2 Conspicuity systems	S7.12 Conspicuity systems	S5.7.3 Combination of sheeting and reflectors.
S8.2.1 Retroreflective sheeting	S7.12.1 Retroreflective sheeting	S5.7.1 Retroreflective sheeting.
S8.2.1.1 Construction	S7.12.1 Retroreflective sheeting	S5.7.1.1 Construction.
S8.2.1.2 Performance requirements	S7.12.1 Retroreflective sheeting	S5.7.1.2; S5.7.1.3(d).
S8.2.1.3 Certification marking	S7.12.1.1 Certification marking	S5.7.1.5 Certification.
S8.2.1.4 Application pattern	Table III Application pattern	New title.
S8.2.1.4.1 Alternating red and white materials	Table III Application pattern—Alternating—Retroreflective sheeting.	S5.7.1.3 Sheeting pattern, dimensions, and relative coefficients of retroreflection.
S8.2.1.4.1.1 Segments	Table III Application pattern—Alternating—Retroreflective sheeting.	S5.7.1.3(b).
S8.2.1.4.1.2 Proportion	Table III Application pattern—Alternating—Retroreflective sheeting.	S5.7.1.3(c).
S8.2.1.5 Application location	Table III Application location—Retroreflective sheeting.	S5.7.1.4(a).
S8.2.1.6 Application spacing	Table III Application spacing—Retroreflective sheeting.	S5.7.1.4(b) and (c).
S8.2.1.7 Photometry	S7.12.1.2 Photometry	S5.7.1.2; Figure 29.
S8.2.2 Conspicuity reflex reflectors	S7.12.2 Conspicuity reflex reflectors	S5.7.2 Reflex reflectors.
S8.2.2.1 Certification marking	S7.12.2.1 Certification marking	S5.7.2.3 Certification.
S8.2.2.2 Application pattern	Table III Application pattern	S5.7.2.2.
S8.2.2.2.1 Alternating red and white materials	Table III Application pattern—Alternating—Conspicuity reflex reflectors.	S5.7.2.2(a).

APPENDIX B.—FMVSS NO. 108 REWRITE CROSS REFERENCE—Continued

Current FMVSS No. 108 or incorporated document citation	FMVSS No. 108 rewrite NPRM citation	FMVSS No. 108 rewrite final rule citation
S8.2.2.2.2 White material	Table III Application pattern—White—Conspicuity reflex reflectors.	S5.7.2.2(b).
S8.2.2.3 Photometry	S7.12.2.2 Photometry	S5.7.2.1.
S8.2.2.3.1 Red reflectors	S7.12.2.2 Photometry	S5.7.2.1(a) and (b).
S8.2.2.3.2 White reflectors—horizontal orientation.	S7.12.2.2 Photometry	S5.7.2.1(a) and (c).
S8.2.2.3.3 White reflectors—vertical orientation	S7.12.2.2 Photometry	S5.7.2.1(a) and (d).
S8.2.3 Conspicuity system installation on trailers.	Table III Trailer rear	New title.
S8.2.3.1 Trailer rear	Table III Trailer rear	S5.7.1.4.1 Rear of trailers.
S8.2.3.1.1 Element 1—alternating red and white materials.	Table III Trailer rear—Element 1—Alternating	S5.7.1.4.1(a).
S8.2.3.1.2 Element 2—white & Exceptions.	Table III Trailer rear—Element 2—White	S5.7.1.4.1 Rear of trailers.
S8.2.3.1.2.1 Upper corners	Table III Trailer rear—Element 2—White—requirement.	S5.7.1.4.1(b).
S8.2.3.1.2.2 Non-rectangular body	Table III Trailer rear—Element 2—White—requirement.	S5.7.1.4.1(b).
S8.2.3.1.3 Element 3—alternating red and white materials & Exceptions.	Table III Trailer rear—Element 3—Alternating	S5.7.1.4.1 Rear of trailers.
S8.2.3.1.3.1 Underride device	Table III Trailer rear—Element 3—Alternating—requirement.	S5.7.1.4.1(c).
S8.2.3.2 Trailer side—alternating red and white materials.	Table III Trailer side—Alternating	S5.7.1.4.2 Side of trailers.
S8.2.3.2.1 Horizontal strip	Table III Trailer side—Alternating—requirement.	S5.7.1.4.2(a).
S8.2.3.2.2 Non-continuous	Table III Trailer side—Alternating—requirement.	S5.7.1.4.2(a).
S8.2.3.2.3 Obstructions	Table III Trailer side—Alternating—requirement.	S5.7.1.4.2(b).
S8.2.4 Conspicuity system installation on truck tractors.	Table III Truck tractor	S5.7.1.4.3 Rear of truck tractors.
S8.2.4.1 Element 1—alternating red and white materials.	Table III Truck tractor—Element 1—Alternating.	S5.7.1.4.3 Rear of truck tractors.
S8.2.4.1.1 Lower horizontal	Table III Truck tractor—Element 1—Alternating—requirement.	S5.7.1.4.3(a).
S8.2.4.1.2 Mudflap mounting	Table III Truck tractor—Element 1—Alternating—requirement.	S5.7.1.4.3(a).
S8.2.4.1.3 Mounting alternatives	Table III Truck tractor—Element 1—Alternating—requirement.	S5.7.1.4.3(a).
S8.2.4.1.4 Obstruction	Table III Truck tractor—Element 1—Alternating—requirement.	S5.7.1.4.3(a).
S8.2.4.2 Element 2—white	Table III Truck tractor—Element 2—White	S5.7.1.4.3(b).
S8.2.4.2.1 Obstruction	Table III Truck tractor—Element 2—White—requirement.	S5.7.1.4.3(b).
S8.2.4.2.2 Symmetrical relocation	Table III Truck tractor—Element 2—White—requirement.	S5.7.1.4.3(b).
S8.2.4.2.3 Window mounting	Table III Truck tractor—Element 2—White—requirement.	S5.7.1.4.3(b).
S9 Associated equipment requirements	S7.14 Associated equipment	Table I and Table III.
S9.1 Turn signal operating unit	New title	New title.
S9.1.1 Canceling	S7.14.1 Turn signal operating unit	S5.1.1.5.
S9.1.2 Physical tests	Table XXI	SAE J589, Apr 1964.
S9.2 Turn signal flasher	New title	New title.
S9.2.1 Indicator signals	S7.14.2 Turn signal flasher	SAE J590b, Oct 1965.
S9.2.2 Physical tests	Table XXI	SAE J590b, Oct 1965.
S9.3 Turn signal pilot indicator	S7.14.3 Turn signal pilot indicator	S5.5.6; SAE J588e, Sep 1970.
S9.3.1 TS lamps not visible	S7.14.3 Turn signal pilot indicator	S5.5.6; SAE J588e, Sep 1970.
S9.3.2 Indicator light(s)	S7.14.3 Turn signal pilot indicator	S5.5.6; SAE J588e, Sep 1970.
S9.3.3 Function	S7.14.3 Turn signal pilot indicator	S5.5.6; SAE J588e, Sep 1970.
S9.3.4 Indicator size and color	S7.14.3.1 Indicator size and color	SAE J588e, Sep 1970.
S9.3.4.1 Interior mounted	S7.14.3.1 Indicator size and color	SAE J588e, Sep 1970.
S9.3.4.2 Exterior mounted	S7.14.3.1 Indicator size and color	SAE J588e, Sep 1970.
S9.3.5 Visibility	S7.14.3.1 Indicator size and color	SAE J588e, Sep 1970.
S9.3.6 Turn signal lamp failure	S7.14.3.2 Turn signal lamp failure	S5.5.6.
S9.4 Headlamp beam switching device	S7.14.4 Headlamp beam switching device	S5.5.1 Headlamp beam switching.
S9.4 Headlamp beam switching device	S7.14.4 Headlamp beam switching device	SAE J564a, Apr 1964.
S9.4.1 Semi-automatic headlamp beam switching device.	S7.14.4.1 Semi-automatic headlamp beam switching device.	S5.5.1 Headlamp beam switching.
S9.4.1 Semi-automatic headlamp beam switching device.	S7.14.4.1 Semi-automatic headlamp beam switching device.	SAE J565b, Feb 1969.
S9.4.1.1 Operating instructions	S7.14.4.1.1 Operating instructions	SAE J565b, Feb 1969, 2.

APPENDIX B.—FMVSS NO. 108 REWRITE CROSS REFERENCE—Continued

Current FMVSS No. 108 or incorporated document citation	FMVSS No. 108 rewrite NPRM citation	FMVSS No. 108 rewrite final rule citation
S9.4.1.2 Manual override	S7.14.4.1.2 Manual override	SAE J565b, Feb 1969, 4.4.
S9.4.1.3 Fail safe operation	S7.14.4.1.3 Fail safe operation	SAE J565b, Feb 1969, 4.6.
S9.4.1.4 Automatic dimming indicator	S7.14.4.1.4 Automatic dimming indicator	SAE J565b, Feb 1969, 4.13.
S9.4.1.5 Lens accessibility	S7.14.4.1.5 Lens accessibility	SAE J565b, Feb 1969, 4.16.
S9.4.1.6 Mounting height	S7.14.4.1.6 Mounting height	SAE J565b, Feb 1969, 4.17.
S9.4.1.7 Physical tests	Table XXI	SAE J565b, Feb 1969.
S9.5 Upper beam headlamp indicator	S7.14.5 Upper beam headlamp indicator	S5.5.2 Upper beam indicator.
S9.5.1 Indicator size, location, and color	S7.14.5.1 Indicator size and location	S5.5.2; SAE J564a, Apr 1964.
S9.6 Vehicular hazard warning signal operating unit.	New title	New title.
S9.6.1 Combinations	S7.14.6 Vehicular hazard warning signal operating unit.	SAE J910, Jan 1966, 3(b) and (d).
S9.6.2 Operation	S7.14.6.1 Operating unit switch	S5.5.5; SAE J910, Jan 1966, 3(c) and (e).
S9.6.3 Physical tests	Table XXI	SAE J910, Jan 1966.
S9.7 Vehicular hazard warning signal flasher	New title	New title.
S9.7.1 Indicator signals	S7.14.7 Vehicular hazard warning signal flasher.	SAE J945, Feb 1966.
S9.7.2 Physical tests	Table XXI	SAE J945, Feb 1966.
S9.8 Vehicular hazard warning signal pilot indicator.	New title	New title.
S9.8.1 Two TS indicators	S7.14.8 Vehicular hazard warning signal pilot indicator.	New title.
S9.8.2 Single TS indicators	S7.14.8 Vehicular hazard warning signal pilot indicator.	SAE J910, Jan 1966, 5; SAE J945, Feb 1966.
S9.8.3 Function	S7.14.8 Vehicular hazard warning signal pilot indicator.	SAE J910, Jan 1966, 5; SAE J945, Feb 1966.
S9.8.4 Indicator size and color	S7.14.8.1 Indicator size and color	SAE J910, Jan 1966, 5; SAE J945, Feb 1966.
S10 Headlighting system requirements	S8 Headlighting system requirements	S7 Headlighting requirements.
S10.1 Vehicle headlighting systems	New title	New title.
S10.1.1 Vehicles ex motorcycles & trailers	S8.1 Headlighting systems	S7.1.
S10.1.2 Motorcycles	S8.1 Headlighting systems	S7.9.2(b).
S10.2 Aiming	S10.2 Aimability	S7.8.5.
S10.3 Number [New section—points to Table I]	New section	New section.
S10.4 Color of light [New section—points to Table I].	New section	New section.
S10.5 Mounting location [New section—points to Table I].	New section	New section.
S10.6 Mounting height [New section—points to Table I].	New section	New section.
S10.7 Activation [New section—points to Table I, Table II, and S6.1.5].	New section	New section.
S10.8 Effective projected luminous lens area [New section—No requirement].	New section	New section.
S10.9 Visibility [New section—No requirement]	New section	New section.
S10.10 Indicator [New section—points to S9.5]	New section	New section.
S10.11 Markings [New section—points to S6.5]	New section	New section.
S10.12 Spacing to other lamps [New section—points to S6.1.4.2].	New section	New section.
S10.13 Sealed beam headlighting system	S9 Sealed beam headlamp requirements	S7.3 Sealed beam headlighting system.
S10.13.1 Installation	S9.1 Installation	S7.3.2 Type A headlighting system.
S10.13.1 Installation	S9.1 Installation	S7.3.3 Type B headlighting system.
S10.13.1 Installation	S9.1 Installation	S7.3.4 Type C headlighting system.
S10.13.1 Installation	S9.1 Installation	S7.3.5 Type D headlighting system.
S10.13.1 Installation	S9.1 Installation	S7.3.6 Type E headlighting system.
S10.13.1 Installation	S9.1 Installation	S7.3.7 Type F headlighting system.
S10.13.1 Installation	S9.1 Installation	S7.3.8 Type G headlighting system.
S10.13.1 Installation	S9.1 Installation	S7.3.9 Type H headlighting system.
S10.13.2 Simultaneous aim	S9.2 Simultaneous aim	S7.3.7(h).
S10.13.2 Simultaneous aim	S9.2 Simultaneous aim	S7.3.7(h)(1).
S10.13.2 Simultaneous aim	S9.2 Simultaneous aim	S7.3.7(h)(2).
S10.13.3 Photometry	S9.3 Photometry	S7.3.2(a)(3).
S10.13.3 Photometry	S9.3 Photometry	S7.3.3(a).
S10.13.3 Photometry	S9.3 Photometry	S7.3.4.
S10.13.3 Photometry	S9.3 Photometry	S7.3.5(a).
S10.13.3 Photometry	S9.3 Photometry	S7.3.6(a).
S10.13.3 Photometry	S9.3 Photometry	S7.3.7(b).
S10.13.3 Photometry	S9.3 Photometry	S7.3.8(b).
S10.13.3 Photometry	S9.3 Photometry	S7.3.9(a).
S10.13.4 Physical tests	S9.4 Physical tests	New title.
S10.13.4.1 Aiming adjustment test	S9.4 Physical tests	SAE J580, Dec 1986, 4.2.
S10.13.4.1 Connector test	S9.4 Physical tests	SAE J580, Dec 1986, 4.4.

APPENDIX B.—FMVSS NO. 108 REWRITE CROSS REFERENCE—Continued

Current FMVSS No. 108 or incorporated document citation	FMVSS No. 108 rewrite NPRM citation	FMVSS No. 108 rewrite final rule citation
S10.13.4.1 Corrosion	S9.4 Physical tests	SAE J580, Dec 1986, 4.1.2.
S10.13.4.1 Inward force test	S9.4 Physical tests	SAE J580, Dec 1986, 4.3.
S10.13.4.1 Torque deflection test	S9.4 Physical tests	SAE J580, Dec 1986, 4.5.
S10.13.4.1 Vibration	S9.4 Physical tests	S7.3.2(c); S7.3.7(i); S7.3.8(d).
S10.13.4.1 Wattage	S9.4 Physical tests	S7.3.2(d); S7.3.3(b); S7.3.5(b); S7.3.6(b); S7.3.7(g); S7.3.8(e); S7.3.9(b).
S10.13.4.2 Retaining ring test ex types G & H	S9.4 Physical tests	S7.3.8(c) (1); SAE J580, Dec 1986, 5.1.6.
S10.13.4.3 Color test	S9.4 Physical tests	S5.1.5.
S10.13.4.3 Material test	S9.4 Physical tests	S5.1.2.
S10.14 Integral beam headlighting	S10 Integral beam headlamp requirements	S7.4 Integral Beam Headlighting System.
S10.14.1 Installation	S10.1 Installation	S7.4 Integral Beam Headlighting System.
S10.14.1 Installation	S10.1 Installation	S7.4(a).
S10.14.2 Aimability	S10.2 Aimability	S7.4(f).
S10.14.3 Simultaneous aim	S10.3 Simultaneous aim	S7.4(d).
S10.14.4 Markings	S10.4 Markings	S7.4(c)(1); S7.4(c)(2).
S10.14.5 Additional light sources	S10.5 Additional light sources	S7.4(i).
S10.14.6 Photometry	S10.6 Photometry	S7.4(a).
S10.14.7 Physical tests	S10.7 Physical tests	New title.
S10.14.7.1 Aiming adjustment tests	S10.7 Physical tests	SAE J580, Dec 1986, 4.2.
S10.14.7.1 Connector test	S10.7 Physical tests	SAE J580, Dec 1986, 4.4.
S10.14.7.1 Corrosion test	S10.7 Physical tests	S7.4(h)(3); S7.4(g).
S10.14.7.1 Inward force test	S10.7 Physical tests	S7.8.5.1(b); SAE J580, Dec 1986, 4.3.
S10.14.7.1 Temperature cycle test	S10.7 Physical tests	S7.4(h)(5)(i).
S10.14.7.1 Vibration test	S10.7 Physical tests	S7.4(h)(7).
S10.14.7.2 Connector—corrosion test	S10.7 Physical tests	S8.4(a); SAE J580, Dec 1986, 4.4.
S10.14.7.2 Dust test	S10.7 Physical tests	S7.4(h)(4); S7.4(g).
S10.14.7.2 Humidity test	S10.7 Physical tests	S7.4(h)(6); S7.4(g).
S10.14.7.2 Sealing test	S10.7 Physical tests	S7.4(g).
S10.14.7.3 Abrasion test	S10.7 Physical tests	S7.4(h)(1); S7.4(g).
S10.14.7.4 Chemical resistance test	S10.7 Physical tests	S7.4(h)(2); S7.4(g).
S10.14.7.5 Internal heat test	S10.7 Physical tests	S7.4(h)(5)(ii); S7.4(g).
S10.14.7.6 Chemical resistance—reflector	S10.7 Physical tests	S7.4(h)(2).
S10.14.7.6 Corrosion resistance—reflector	S10.7 Physical tests	S7.4(h)(3).
S10.14.7.7 Torque deflection test	S10.7 Physical tests	S7.8.5.1(a).
S10.14.7.8 Color test	S10.7 Physical tests	S5.1.5.
S10.14.7.8 Material test	S10.7 Physical tests	S5.1.2.
S10.15 Replaceable bulb headlighting system	S11 Replaceable bulb headlamp requirements	S7.5 Replaceable bulb headlighting system.
S10.15.1 Installation	S11.1 Installation	S7.5(a).
S10.15.2 Aiming restrictions	S11.2 Aiming restrictions	S7.5(d)(1).
S10.15.2 Aiming restrictions	S11.2 Aiming restrictions	S7.5(e)(1).
S10.15.2 Aiming restrictions	S11.2 Aiming restrictions	S7.5(h).
S10.15.3 Replacement equipment	S11.4 Replacement equipment	S7.5(f).
S10.15.4 Markings	S11.5 Markings	New title.
S10.15.4.1 U & L	S11.5 Markings	S7.5(d)(3)(i)(B).
S10.15.4.1 U & L	S11.5 Markings	S7.5(d)(3)(ii)(B).
S10.15.4.1 U & L	S11.5 Markings	S7.5(e)(3)(i).
S10.15.4.1 U & L	S11.5 Markings	S7.5(e)(3)(ii).
S10.15.4.1.1 Exception	Omitted	S7.5(d)(3)(i)(A).
S10.15.4.1.1 Exception	Omitted	S7.5(d)(3)(ii)(A).
S10.15.5. Additional light sources	S11.3 Additional light sources	S7.5(j).
S10.15.6 Photometry	S11.6 Photometry	S7.5(b).
S10.15.7 Physical tests	S11.7 Physical tests	S7.5(i).
S10.15.7.1 Aiming adjustment tests	S11.7 Physical tests	SAE J580, Dec 1986, 4.2.
S10.15.7.1 Connector test	S11.7 Physical tests	SAE J580, Dec 1986, 4.4.
S10.15.7.1 Corrosion test	S11.7 Physical tests	S7.4(h)(3); S7.4(g).
S10.15.7.1 Corrosion—connector test	S11.7 Physical tests	S8.4(a); SAE J580, Dec 1986, 4.4.
S10.15.7.1 Dust test	S11.7 Physical tests	S7.4(h)(4); S7.4(g).
S10.15.7.1 Humidity test	S11.7 Physical tests	S7.4(h)(6); S7.4(g).
S10.15.7.1 Inward force test	S11.7 Physical tests	S7.8.5.1(b); SAE J580, Dec 1986, 4.3.
S10.15.7.1 Temperature cycle test	S11.7 Physical tests	S7.4(h)(5)(i).
S10.15.7.1 Vibration test	S11.7 Physical tests	S7.4(h)(7).
S10.15.7.2 Abrasion test	S11.7 Physical tests	S7.4(h)(1); S7.4(g).
S10.15.7.3 Chemical resistance test	S11.7 Physical tests	S7.4(h)(2); S7.4(g).
S10.15.7.4 Internal heat test	S11.7 Physical tests	S7.4(h)(5)(ii); S7.4(g).
S10.15.7.5 Chemical resistance—reflector	S11.7 Physical tests	S7.4(h)(2).
S10.15.7.5 Corrosion resistance—reflector	S11.7 Physical tests	S7.4(h)(3).
S10.15.7.6 Torque deflection test	S11.7 Physical tests	S7.8.5.1(a).
S10.15.7.7 Color test	S11.7 Physical tests	S5.1.5.
S10.15.7.7 Material test	S11.7 Physical tests	S5.1.2.
S10.16 Combination headlighting system	S12 Combination headlamps	S7.6 Combination Headlighting System.
S10.16.1 Installation	S12.1 Installation	S7.6.1.

APPENDIX B.—FMVSS NO. 108 REWRITE CROSS REFERENCE—Continued

Current FMVSS No. 108 or incorporated document citation	FMVSS No. 108 rewrite NPRM citation	FMVSS No. 108 rewrite final rule citation
S10.16.2 Photometry	S12.2 Photometry	S7.6.2.
S10.16.2 Photometry	S12.2 Photometry	S7.6.2.1.
S10.16.2 Photometry	S12.2 Photometry	S7.6.2.2.
S10.16.2 Photometry	S12.2 Photometry	S7.6.3.
S10.16.3 Physical tests	S12.3 Physical tests	New title.
S10.16.3.1 Type F sealed beam	S12.3 Physical tests	S7.6.2.
S10.16.3.2 Integral beam	S12.3 Physical tests	S7.6.2.1.
S10.16.3.3 Replaceable bulb	S12.3 Physical tests	S7.6.2.2.
S10.17 Motorcycle headlighting system	S13 Motorcycle headlamp requirements	S7.9.2.
S10.17.1 Installation	S13.1 Installation	S7.9.6.1.
S10.17.1.1 Single headlamp	S13.1.1 Single headlamp	S7.9.6.2(a).
S10.17.1.2 Two headlamps with both beams	S13.1.2 Two headlamps with both beams	S7.9.6.2(b).
S10.17.1.3 Two headlamps, upper beam and lower beam.	S13.1.3 Two headlamps, upper beam and lower beam.	S7.9.6.2(c).
S10.17.2 Motorcycle replaceable bulb headlamp marking.	S13.4 Motorcycle replaceable bulb headlamp marking.	S7.9.5.
S10.17.3 Photometry	S13.2 Photometry	S7.9.2(a).
S10.17.4 Physical tests	S13.3 Physical tests	SAE J584, Apr 1964.
S10.17.5 Motorcycle headlamp modulation system.	S13.5 Motorcycle headlamp modulation system.	S7.9.4.1.
S10.17.5.1(a) Rate	S13.5.1(a) Rate	S7.9.4.1(a).
S10.17.5.1(b) Maximum power	S13.5.1(b) Maximum power	S7.9.4.1(b).
S10.17.5.1(c) Minimum intensity	S13.5.1(c) Minimum intensity	S7.9.4.1(c).
S10.17.5.1(d) Wiring	S13.5.1(d) Wiring	S7.9.4.1(d).
S10.17.5.1(e) Failure mode	S13.5.1(e) Failure mode	S7.9.4.1(e).
S10.17.5.1(f) Sensor	S13.5.1(f) Sensor	S7.9.4.1(f).
S10.17.5.1(g) Voltage drop	S13.5.1(g) Voltage drop	S7.9.4.1(g).
S10.17.5.1(h) Full voltage operation	S13.5.1(h) Full voltage operation	S7.9.4.1(h).
S10.17.5.2 Replacement modulators	S13.5.2 Replacement modulators	S7.9.4.2(a).
S10.17.5.2.1 Replacement performance	S13.5.2.1 Replacement performance	S7.9.4.2(a).
S10.17.5.2.2 Replacement instructions	S13.5.2.2 Replacement instructions	S7.9.4.2(b).
S10.18.1 Headlamp mounting and aiming	S14.1 Headlamp mounting and aiming	S7.8.2.
S10.18.1.1 Adjustments	S8.1.5 Headlamp adjustments	SAE J566, Jan 1960, 1.
S10.18.1.2 Procedure & security	S8.1.5 Headlamp adjustments	SAE J566, Jan 1960, 2.
S10.18.1.2 Procedure & security	S8.1.5 Headlamp adjustments	SAE J566, Jan 1960, 3.
S10.18.2 Headlamp aiming systems	S14.3 Headlamp aiming systems	S7.8.5.
S10.18.3 Aim adjustment interaction	S14.4 Aim adjustment interaction	S7.8.2.1(a).
S10.18.3 Aim adjustment interaction	S14.4 Aim adjustment interaction	S7.8.2.1(b).
S10.18.3.1 Excess aim interaction	S14.4.1 Excess aim interaction	S7.8.5.2(b)(3).
S10.18.4 Horizontal adjustment—visually aimed headlamp.	S14.5 Horizontal adjustment—visually aimed headlamp.	S7.8.2.1(c).
S10.18.5 Optical axis marking	S14.6 Optical axis marking	S7.8.1.
S10.18.5.1 Optical axis marking—vehicle	S14.6.1 Optical axis marking—vehicle	S7.8.1(b).
S10.18.5.2 Optical axis marking—lamp	S14.6.2 Optical axis marking—lamp	S7.8.1(a).
S10.18.5.3 Optical axis marking—visual aim headlamp.	S14.6.3 Optical axis marking—visual aim headlamp.	S7.8.1(c).
S10.18.5.3 Optical axis marking—visual aim headlamp.	S14.6.3 Optical axis marking—visual aim headlamp.	S7.8.5.3(f)(1).
S10.18.6 Moveable reflector requirements	S14.7 Moveable reflectors	S7.8.2.2(a).
S10.18.6 Moveable reflector requirements	S14.7 Moveable reflectors	S7.8.2.2(b).
S10.18.7 External aiming	S14.8 External aiming	S7.8.5.1 External aiming.
S10.18.7.1 Headlamp aiming device locating plates.	S14.8.1 Headlamp aiming device locating plates.	S7.8.5.1(d).
S10.18.7.1.1 Aiming pads	S14.8.1.1 Aiming pads	S7.8.5.1(d)(1).
S10.18.7.1.2 Aiming dimension marking	S14.8.1.2 Aiming dimension marking	S7.8.5.1(d)(2).
S10.18.7.2 Nonadjustable headlamp aiming device locating plates.	S14.8.2 Nonadjustable headlamp aiming device locating plates.	S7.8.5.1(e).
S10.18.8 On—vehicle aiming	S14.9 On—vehicle aiming	S7.8.5.2 On—vehicle aiming.
S10.18.8.1 Aim	S14.9.1 Aim	S7.8.5.2(a) Aim.
S10.18.8.1.1 Vertical aim	S14.9.1.1 Vertical aim	S7.8.5.2(a)(1) Vertical axis.
S10.18.8.1.1.1 Graduations	S14.9.1.1.1 Graduations	S7.8.5.2(a)(1)(i).
S10.18.8.1.1.2 VHAD markings	S14.9.1.1.2 VHAD markings	S7.8.5.2(a)(1)(ii).
S10.18.8.1.1.3 Graduation scale	S14.9.1.1.3 Graduation scale	S7.8.5.2(a)(1) (iii).
S10.18.8.1.1.4 Vertical indicator range	S14.9.1.1.4 Vertical indicator range	S7.8.5.2(a)(1)(iv).
S10.18.8.1.1.5 Floor slope compensation	S14.9.1.1.5 Floor slope compensation	S7.8.5.2(a)(1)(v).
S10.18.8.1.1.6 Graduation legibility	S14.9.1.1.6 Graduation legibility	S7.8.5.2(a)(1)(vi).
S10.18.8.1.2 Horizontal aim	S14.9.1.2 Horizontal aim	S7.8.5.2(a)(2) Horizontal aim.
S10.18.8.1.2.1 Graduation scale	S14.9.1.2.1 Graduation scale	S7.8.5.2(a)(2) (i).
S10.18.8.1.2.2 Horizontal markings	S14.9.1.2.2 Horizontal markings	S7.8.5.2(a)(2)(ii).
S10.18.8.1.2.3 Graduation legibility	S14.9.1.2.3 Graduation legibility	S7.8.5.2(a)(2)(iii).
S10.18.8.1.2.4 Horizontal indicator range	S14.9.1.2.4 Horizontal indicator range	S7.8.5.2(a)(2)(iv).

APPENDIX B.—FMVSS NO. 108 REWRITE CROSS REFERENCE—Continued

Current FMVSS No. 108 or incorporated document citation	FMVSS No. 108 rewrite NPRM citation	FMVSS No. 108 rewrite final rule citation
S10.18.8.2 Aiming instructions	S14.9.2 Aiming instructions	S7.8.5.2(b) Aiming instructions.
S10.18.8.2.1 Aiming instruction location and content.	S14.9.2.1 Aiming instruction location and content.	S7.8.5.2(b)(1).
S10.18.8.2.2 Remote indicator instructions	S14.9.2.2 Remote indicator instructions	S7.8.5.2(b)(2).
S10.18.8.3 Permanent calibration	S14.9.3 Permanent calibrations	S7.8.5.2(c).
S10.18.8.4 Replacement units	S14.9.4 Replacement units	S7.8.5.2(d)(2).
S10.18.8.5 Physical tests	S14.9.5 Physical tests	S7.8.5.2(d) Testing the VHAD.
S10.18.9 Visual/optical aiming	S14.10 Visual/optical aiming	S7.8.5.3 Visual/optical aiming.
S10.18.9.1 Vertical aim, lower beam	S14.10.1 Vertical aim, lower beam	S7.8.5.3(a) Vertical aim, lower beam.
S10.18.9.1.1 Vertical position of the cutoff	S14.10.1.1 Vertical position of the cutoff	S7.8.5.3(a)(1) Vertical position of cutoff.
S10.18.9.1.2 Vertical gradient	S14.10.1.2 Vertical gradient	S7.8.5.3(a)(2) Vertical gradient.
S10.18.9.1.3 Horizontal position of the cutoff	S14.10.1.3 Horizontal position of the cutoff	S7.8.5.3(a)(3) Horizontal position of the cutoff.
S10.18.9.1.4 Maximum inclination of the cutoff	S14.10.1.4 Maximum inclination of the cutoff	S7.8.5.3(a)(4) Maximum inclination of cutoff.
S10.18.9.1.5 Measuring the cutoff parameter	S14.10.1.5 Measuring the cutoff parameter	Interpretation—Spingler 4/6/2000.
S10.18.9.1.5 Measuring the cutoff parameter	S14.10.1.5 Measuring the cutoff parameter	S7.8.5.3(a)(5)(i).
S10.18.9.1.5.1 Test position	S14.10.1.5.1 Test position	S7.8.5.3(a)(5)(i).
S10.18.9.1.5.2 Headlamp aiming	S14.10.1.5.2 Headlamp aiming	S7.8.5.3(a)(5)(ii).
S10.18.9.1.5.3 Beam scanning	S14.10.1.5.3 Beam scanning	S7.8.5.3(a)(5)(iii).
S10.18.9.1.5.4 Gradient calculation	S14.10.1.5.4 Gradient calculation	S7.8.5.3(a)(5)(iv).
S10.18.9.2 Horizontal aim, lower beam	S14.10.2 Horizontal aim, lower beam	S7.8.5.3(b) Horizontal aim, lower beam.
S10.18.9.3 Vertical aim, upper beam	S14.10.3 Vertical aim, upper beam	S7.8.5.3(c) Vertical aim, upper beam.
S10.18.9.3.1 Combined upper and lower beams.	S14.10.3.1 Combined upper and lower beams	S7.8.5.3(c)(1).
S10.18.9.3.2 Upper beam without lower beam	S14.10.3.2 Upper beam without lower beam	S7.8.5.3(c)(2).
S10.18.9.4 Horizontal aim, upper beam	S14.10.4 Horizontal aim, upper beam	S7.8.5.3(d) Horizontal aim, upper beam.
S10.18.9.4.1 Combined upper and lower beams.	S14.10.4.1 Combined upper and lower beams	S7.8.5.3(d)(1).
S10.18.9.4.2 Upper beam without lower beam	S14.10.4.2 Upper beam without lower beam	S7.8.5.3(d)(2).
S10.18.9.4.3 Upper beam without lower beam of VHAD.	S14.10.4.3 Upper beam without lower beam of VHAD.	S7.8.5.3(d)(3).
S10.18.9.5 Photometry	S14.10.5 Photometric measurements	S7.8.5.3(e)(1).
S10.18.9.6 Visual/optical identification marking	S14.10.6 Visual/optical identification marking	S7.8.5.3(f)(2)(v).
S10.18.9.6.1 VOL/VOR/VO markings	S14.10.6.1 VOL/VOR/VO markings	S7.8.5.3(f)(2)(i).
S10.18.9.6.1 VOL/VOR/VO markings	S14.10.6.1 VOL/VOR/VO markings	S7.8.5.3(f)(2)(ii).
S10.18.9.6.1 VOL/VOR/VO markings	S14.10.6.1 VOL/VOR/VO markings	S7.8.5.3(f)(2)(iv).
S10.18.9.6.2 VOR/VO markings on sealed beams.	S14.10.6.2 VOR/VO markings on sealed beams.	S7.8.5.3(f)(2)(iii).
S11 Replaceable light sources	S15 Replaceable light sources	S7.7 Replaceable light sources.
S11.1 Markings	S15.1 Markings	S7.7(a).
S11.2 Ballast markings	S15.4 Ballast markings	S7.7(e).
S11.3 Gas discharge laboratory life	S15.5 Gas discharge laboratory life	S7.7(f).
S11.4 Physical tests	New title	New title.
S11.4.1 Deflection test	S15.6 Physical tests	S7.7(g).
S11.4.1 Pressure test	S15.6 Physical tests	S7.7(c).
S11.4.2 Power & Luminous flux tests	S15.2 Power and flux measurement	S7.7(b).
S11.4.2 Power & Luminous flux tests	S15.3 Power and flux measurement	S7.7(d).
S12 Headlamp concealment device requirements.	S16 Headlamp concealment device requirements.	S12 Headlamp concealment devices.
S12.1 Power loss during headlamp use	S16.1 Power loss during headlamp use	S12.1.
S12.2 Manual device actuation	S16.2 Manual device actuation	S12.2.
S12.3 Single step actuation	S16.3 Single step actuation	S12.3.
S12.4 Headlamp aiming and replacement	S16.4 Headlamp aiming and replacement	S12.4.
S12.5 Operational temperature range and time limitation.	S16.5 Operational temperature range and time limitation.	S12.5.
S12.6 ECE compliance alternative	S16.6 ECE compliance alternative	S12.6.
S12.7 Certification election	S16.7 Certification election	S12.7 Certification election.
S13 Replaceable headlamp lens requirements	S18 Replaceable headlamp lens requirements	S5.8.1.
S13 Replaceable headlamp lens requirements	S18 Replaceable headlamp lens requirements	S5.8.11.
S13 Replaceable headlamp lens requirements	S18 Replaceable headlamp lens requirements	S7.2(e).
S14 Physical and photometry test procedures and performance requirements.	New title	New title.
S14.1 General test procedures and performance requirements.	New title	New title.
S14.1.1 Physical test requirements	S6.8.1 Physical test requirements	SAE device documents referencing SAE J575.
S14.1.2 Plastic optical materials	S6.8.4 Plastic optical materials	S5.1.2.
S14.1.3 UV tracer	S6.8.4.1 UV tracer	SAE J576, Jul 1991, 5.
S14.1.4.1 Representative samples	S6.8.2 Samples for test	SAE J1383, Apr 1985, 4.5.1.
S14.1.4.2 Mounting bracket	S6.8.2 Samples for test	SAE J575, Dec 1988, 2.1.
S14.1.4.2 Mounting bracket	S6.8.2 Samples for test	SAE J575, Dec 1988, 2.3.
S14.1.4.3 Second sample set	S6.8.2 Samples for test	SAE J575d, Aug 1967, B.

APPENDIX B.—FMVSS NO. 108 REWRITE CROSS REFERENCE—Continued

Current FMVSS No. 108 or incorporated document citation	FMVSS No. 108 rewrite NPRM citation	FMVSS No. 108 rewrite final rule citation
S14.1.4.3 Second sample set	S6.8.2 Samples for test	SAE J575e, Aug 1970, B.
S14.1.5 Laboratory facilities	S6.8.3 Laboratory facilities	SAE J575, Dec 1988, 3.
S14.1.5 Laboratory facilities	S6.8.3 Laboratory facilities	SAE J575d, Aug 1967, D.
S14.1.5 Laboratory facilities	S6.8.3 Laboratory facilities	SAE J575e, Aug 1970, D.
S14.2 Photometric test procedures	S6.8.5 Photometric tests	S5.7.1.2.
S14.2 Photometric test procedures	S6.8.5 Photometric tests	S5.7.2.1(a).
S14.2 Photometric test procedures	S6.8.5 Photometric tests	S7.3.2(a)(3).
S14.2 Photometric test procedures	S6.8.5 Photometric tests	S7.3.3(a).
S14.2 Photometric test procedures	S6.8.5 Photometric tests	S7.3.4 Type C headlighting system.
S14.2 Photometric test procedures	S6.8.5 Photometric tests	S7.3.5(a).
S14.2 Photometric test procedures	S6.8.5 Photometric tests	S7.3.6(a).
S14.2 Photometric test procedures	S6.8.5 Photometric tests	S7.3.7(b).
S14.2 Photometric test procedures	S6.8.5 Photometric tests	S7.3.7(d).
S14.2 Photometric test procedures	S6.8.5 Photometric tests	S7.3.7(h)(1).
S14.2 Photometric test procedures	S6.8.5 Photometric tests	S7.3.8(b).
S14.2 Photometric test procedures	S6.8.5 Photometric tests	S7.3.9(a).
S14.2 Photometric test procedures	S6.8.5 Photometric tests	S7.4(a)(1)(i).
S14.2 Photometric test procedures	S6.8.5 Photometric tests	S7.4(a)(1)(ii).
S14.2 Photometric test procedures	S6.8.5 Photometric tests	S7.4(a)(1)(iii).
S14.2 Photometric test procedures	S6.8.5 Photometric tests	S7.4(a)(2)(i).
S14.2 Photometric test procedures	S6.8.5 Photometric tests	S7.4(a)(2)(ii).
S14.2 Photometric test procedures	S6.8.5 Photometric tests	S7.4(a)(3).
S14.2 Photometric test procedures	S6.8.5 Photometric tests	S7.5(b).
S14.2 Photometric test procedures	S6.8.5 Photometric tests	S7.5(d)(2).
S14.2 Photometric test procedures	S6.8.5 Photometric tests	S7.5(e)(2).
S14.2 Photometric test procedures	S6.8.5 Photometric tests	S7.6.2.
S14.2 Photometric test procedures	S6.8.5 Photometric tests	S7.6.3.
S14.2 Photometric test procedures	S6.8.5 Photometric tests	S7.9.2.
S14.2 Photometric test procedures	S6.8.5 Photometric tests	SAE device documents referencing SAE J575.
S14.2.1 Photometry measurements for all lamps except license lamps, headlamps, and DRLs.	S6.8.5.1 Photometry ex headlamp, license lamp, & DRL.	New title.
S14.2.1.1 Mounting	S6.8.5.1 Photometry ex headlamp, license lamp, & DRL.	SAE J575d, Aug 1967, J; SAE J575e, Aug 1970, J.
S14.2.1.2 School bus signal lamp aiming	S6.8.5.1 Photometry ex headlamp, license lamp, & DRL.	SAE J887, Jul 1964.
S14.2.1.3 Measurement distance	S6.8.5.1 Photometry ex headlamp, license lamp, & DRL.	SAE device documents for photometry distance.
S14.2.1.4 Location of test points	S6.8.5.1.1 Location of test points	SAE J575d, Aug 1967, J; SAE J575e, Aug 1970, J.
S14.2.1.5 Multiple compartment and multiple lamp photometry of turn signal lamps, stop lamps, and taillamps.	S6.8.5.1.2 Multiple compartment & multiple lamp photometry.	New title.
S14.2.1.5.1 All photometered together	S6.8.5.1.2 Multiple compartment & multiple lamp photometry.	SAE J1395, Apr 1985, 4.1.5.2.
S14.2.1.5.1 All photometered together	S6.8.5.1.2 Multiple compartment & multiple lamp photometry.	SAE J1398, May 1985, 4.1.5.2.
S14.2.1.5.1 All photometered together	S6.8.5.1.2 Multiple compartment & multiple lamp photometry.	SAE J585e, Sep 1977, 3.6.2.
S14.2.1.5.1 All photometered together	S6.8.5.1.2 Multiple compartment & multiple lamp photometry.	SAE J586, Feb 1984, 4.1.5.2.
S14.2.1.5.1 All photometered together	S6.8.5.1.2 Multiple compartment & multiple lamp photometry.	SAE J588, Nov 1984, 4.1.5.2.
S14.2.1.5.2(a) Measuring together	S6.8.5.1.2.1 Photometry of all compartments/lamps together.	SAE J585e, Sep 1977, 3.6.2(a).
S14.2.1.5.2(a) Measuring together	S6.8.5.1.2.1 Photometry of all compartments/lamps together.	SAE J586, Feb 1984, 4.1.5.2.1.
S14.2.1.5.2(a) Measuring together	S6.8.5.1.2.1 Photometry of all compartments/lamps together.	SAE J588, Nov 1984, 4.1.5.2.1.
S14.2.1.5.2(b) Measuring individually	S6.8.5.1.2.2 Photometry of individual compartments/lamps.	SAE J1395, Apr 1985, 4.1.5.2.
S14.2.1.5.2(b) Measuring individually	S6.8.5.1.2.2 Photometry of individual compartments/lamps.	SAE J1398, May 1985, 4.1.5.2.
S14.2.1.5.2(b) Measuring individually	S6.8.5.1.2.2 Photometry of individual compartments/lamps.	SAE J585e, Sep 1977, 3.6.2(b).
S14.2.1.5.2(b) Measuring individually	S6.8.5.1.2.2 Photometry of individual compartments/lamps.	SAE J586, Feb 1984, 4.1.5.2.2.
S14.2.1.5.2(b) Measuring individually	S6.8.5.1.2.2 Photometry of individual compartments/lamps.	SAE J588, Nov 1984, 4.1.5.2.2.

APPENDIX B.—FMVSS NO. 108 REWRITE CROSS REFERENCE—Continued

Current FMVSS No. 108 or incorporated document citation	FMVSS No. 108 rewrite NPRM citation	FMVSS No. 108 rewrite final rule citation
S14.2.1.5.3 Multiple on 2032 mm or wider	S6.8.5.1.2.3 Multiple compartment/lamp photometry for wide vehicles.	SAE J1395, Apr 1985, 4.1.5.2.
S14.2.1.5.3 Multiple on 2032 mm or wider	S6.8.5.1.2.3 Multiple compartment/lamp photometry for wide vehicles.	SAE J1398, May 1985, 4.1.5.2.
S14.2.1.6 Bulbs	S6.8.5.2 Bulbs	S5.1.1.17.
S14.2.1.6.1 Bulbs without MSCD	S6.8.5.2.1 Bulbs without MSCD	S5.1.1.16.
S14.2.1.6.2 Socket exemption	Omitted	Table IV footnotes 2 and 3.
S14.2.2 License plate lamp photometry	S6.8.5.3 License plate lamp photometry	SAE J587, Oct 1981, 6.3.
S14.2.2.1 Illumination surface	S6.8.5.3.1 Illumination surface	SAE J587, Oct 1981, 6.7.
S14.2.2.2 Test stations	S6.8.5.3.2 Test stations	SAE J587, Oct 1981, 6.8.
S14.2.2.3 Bulbs	S6.8.5.2 Bulbs	S5.1.1.17.
S14.2.3 Reflex reflector and retroreflective sheeting photometry.	S6.8.5.4 Reflex reflector photometry	SAE J594f, Jan 1977, 3.1.7.
S14.2.3.1 Mounting	S6.8.5.4 Reflex reflector photometry	SAE J594f, Jan 1977, 3.1.7.
S14.2.3.2 Illumination source	S6.8.5.4 Reflex reflector photometry	SAE J594f, Jan 1977, 3.1.7.
S14.2.3.3 Measurement distance	S6.8.5.4 Reflex reflector photometry	SAE J594f, Jan 1977, 3.1.7.
S14.2.3.4 Test setup	S6.8.5.4 Reflex reflector photometry	SAE J594f, Jan 1977, 3.1.7.
S14.2.3.5 Photodetector	S6.8.5.4 Reflex reflector photometry	SAE J594f, Jan 1977, 3.1.7.
S14.2.3.6 Photometry surface	S6.8.5.4 Reflex reflector photometry	SAE J594f, Jan 1977, 3.1.7.
S14.2.3.7 Procedure	S6.8.5.4.1 Reflex reflector and retroreflective sheeting photometry measurements.	SAE J594f, Jan 1977, 3.1.7.
S14.2.3.7.1 Observation angel	S6.8.5.4.1 Reflex reflector and retroreflective sheeting photometry measurements.	SAE J594f, Jan 1977, 3.1.7.
S14.2.3.7.2 Entrance angle	S6.8.5.4.1 Reflex reflector and retroreflective sheeting photometry measurements.	SAE J594f, Jan 1977, 3.1.7.
S14.2.3.7.3 Convention	S6.8.5.4.1 Reflex reflector and retroreflective sheeting photometry measurements.	SAE J594f, Jan 1977, 3.1.7.
S14.2.3.7.4 Luminous intensity and illumination	S6.8.5.4.1 Reflex reflector and retroreflective sheeting photometry measurements.	SAE J594f, Jan 1977, 3.1.7.
S14.2.3.8 Measurements	S6.8.5.4.1 Reflex reflector and retroreflective sheeting photometry measurements.	SAE J594f, Jan 1977, 3.1.7.
S14.2.3.8.1 Reflex reflectors	S6.8.5.4.1 Reflex reflector and retroreflective sheeting photometry measurements.	S5.7.2 Reflex reflectors.
S14.2.3.8.2 Retroreflective sheeting	S6.8.5.4.1 Reflex reflector and retroreflective sheeting photometry measurements.	S5.7.1.2 Performance requirements.
S14.2.3.8.3 Reflex reflector photometry measurement adjustments.	S6.8.5.4.1.1 Reflex reflector photometry measurement adjustments.	SAE J594f, Jan 1977, 3.1.7.
S14.2.3.8.3.1 Reflectors with non fixed rotation	S6.8.5.4.1.1 Reflex reflector photometry measurement adjustments.	SAE J594f, Jan 1977, 3.1.7.
S14.2.3.8.3.2 Reflectors with fixed rotation	S6.8.5.4.1.1 Reflex reflector photometry measurement adjustments.	SAE J594f, Jan 1977, 3.1.7.
S14.2.3.8.3.3 Additional photometric readings	S6.8.5.4.1.1 Reflex reflector photometry measurement adjustments.	SAE J594f, Jan 1977, 3.1.7.
S14.2.4 Daytime running lamp (DRL) photometry measurements.	S6.8.5.5 Daytime running lamp (DRL) photometry measurements.	New title.
S14.2.4.1	S6.8.5.5 Daytime running lamp (DRL) photometry measurements.	S11 Photometric Test.
S14.2.4.2	S6.8.5.5 Daytime running lamp (DRL) photometry measurements.	S11 Photometric Test.
S14.2.4.3 Bulbs	S6.8.5.2 Bulbs	S5.1.1.17.
S14.2.5 Headlamp photometry measurements	S6.8.5.6 Headlamp photometry measurements.	New title.
S14.2.5.1 Mounting	S6.8.5.6 Headlamp photometry measurements.	SAE J575, Dec 1988, 4.6.3.
S14.2.5.2 Glare area	S6.8.5.6.5 Location of test points	S7.2(d).
S14.2.5.3 Measurement distance	S6.8.5.6 Headlamp photometry measurements.	S10(a).
S14.2.5.3 Measurement distance	S6.8.5.6 Headlamp photometry measurements.	S10(b).
S14.2.5.3 Measurement distance	S6.8.5.6 Headlamp photometry measurements.	S7.4(e).
S14.2.5.3 Measurement distance	S6.8.5.6 Headlamp photometry measurements.	S7.5(c).
S14.2.5.3 Measurement distance	S6.8.5.6 Headlamp photometry measurements.	S7.8.5.2(d)(1).
S14.2.5.3 Measurement distance	S6.8.5.6 Headlamp photometry measurements.	SAE J1383, Apr 1985, 4.1.4.2.
S14.2.5.4 Seasoning and test voltage	S6.8.5.6.1 Seasoning and test voltage	SAE J1383, Apr 1985, 4.1.4.1.
S14.2.5.4 Seasoning and test voltage	S6.8.5.6.1 Seasoning and test voltage	SAE J1383, Apr 1985, 4.1.4.3.
S14.2.5.4 Seasoning and test voltage	S6.8.5.6.1 Seasoning and test voltage	SAE J575, Dec 1988, 4.6.3.4.
S14.2.5.5 Aiming	S6.8.5.6.2 Aiming	S7.2(d).

APPENDIX B.—FMVSS NO. 108 REWRITE CROSS REFERENCE—Continued

Current FMVSS No. 108 or incorporated document citation	FMVSS No. 108 rewrite NPRM citation	FMVSS No. 108 rewrite final rule citation
S14.2.5.5 Aiming	S6.8.5.6.2 Aiming	S7.3.7(b).
S14.2.5.5 Aiming	S6.8.5.6.2 Aiming	S7.8.5.2(d)(1).
S14.2.5.5 Aiming	S6.8.5.6.2 Aiming	S7.8.5.3(e)(2).
S14.2.5.5.1 Mechanically aimable headlamps using an external aimer.	S6.8.5.6.2(a) Aiming—mechanical	SAE J1383, Apr 1985, 4.1.4.3.
S14.2.5.5.2 Mechanically aimable headlamps equipped with a VHAD.	S6.8.5.6.2(b) Aiming—VHAD	S7.8.5.2(d)(1).
S14.2.5.5.3 Visually aimable lower beam headlamps—vertical aim.	S6.8.5.6.2(c) Aiming—LB VOL/VOR vertical	New title.
S14.2.5.5.3.1 VOL	S6.8.5.6.2(c) Aiming—LB VOL/VOR vertical	S7.8.5.3(a)(1) and (e)(2).
S14.2.5.5.3.2 VOR	S6.8.5.6.2(c) Aiming—LB VOL/VOR vertical	S7.8.5.3(a)(1) and (e)(2).
S14.2.5.5.4 Visually aimable lower beam headlamps—horizontal aim.	S6.8.5.6.2(d) Aiming—LB VOL/VOR horizontal	S7.8.5.3(b) Horizontal aim, lower beam.
S14.2.5.5.5 Visually aimable upper beam headlamps—vertical aim.	S6.8.5.6.2(e) Aiming—UB VOL/VOR vertical	New title.
S14.2.5.5.5.1 Combined UB & LB	S6.8.5.6.2(e) Aiming—UB VOL/VOR vertical	S7.8.5.3(c)(1) and (e)(2).
S14.2.5.5.5.2 Non—combined UB & LB	S6.8.5.6.2(e) Aiming—UB VOL/VOR vertical	S7.8.5.3(c)(2) and (e)(2).
S14.2.5.5.6 Visually aimable upper beam headlamps—horizontal aim.	S6.8.5.6.2(f) Aiming—UB VOL/VOR horizontal	New title.
S14.2.5.5.6.1 Combined UB & LB	S6.8.5.6.2(f) Aiming—UB VOL/VOR horizontal	S7.8.5.3(d)(1).
S14.2.5.5.6.2 Non-combined UB & LB with VHAD.	S6.8.5.6.2(f) Aiming—UB VOL/VOR horizontal	S7.8.5.3(d)(2).
S14.2.5.5.6.3 Non-combined UB & LB without VHAD.	S6.8.5.6.2(f) Aiming—UB VOL/VOR horizontal	S7.8.5.3(d)(3).
S14.2.5.5.7 Simultaneous aim Type F sealed beam headlamps and beam contributor integral beam headlamps.	S6.8.5.6.2(g) Aiming—Simultaneous aim	S10(a) and (b).
S14.2.5.5.8 Motorcycle headlamp—upper beam headlamps designed to comply with Table XX.	S6.8.5.6.2(i) Aiming—Motorcycle UB	S7.9.3 and SAE J584, Oct 1993.
S14.2.5.5.9 Motorcycle headlamp—lower beam headlamps designed to comply with Table XX.	S6.8.5.6.2(j) Aiming—Motorcycle LB	SAE J584, Apr 1964.
S14.2.5.6 Positioner	S6.8.5.6.3 Positioner	SAE J575, Dec 1988, 4.6.2.1.
S14.2.5.7 Photometer	S6.8.5.6.4 Photometer	New title.
S14.2.5.7.1 Range	S6.8.5.6.4 Photometer	SAE J575, Dec 1988, 4.6.2.2.
S14.2.5.7.2 Sensor	S6.8.5.6.4 Photometer	SAE J575, Dec 1988, 4.6.2.3.
S14.2.5.7.2.1 Effective area	S6.8.5.6.4 Photometer	SAE J575, Dec 1988, 4.6.2.3.1.
S14.2.5.7.2.2 Intercepted light	S6.8.5.6.4 Photometer	SAE J575, Dec 1988, 4.6.2.3.1.
S14.2.5.7.2.3 Direct illumination	S6.8.5.6.4 Photometer	SAE J575, Dec 1988, 4.6.2.3.1.
S14.2.5.7.3 Color response	S6.8.5.6.4 Photometer	SAE J575, Dec 1988, 4.6.2.3.2.
S14.2.5.8 Location of test points	S6.8.5.6.5 Location of test points	SAE J575, Dec 1988, 4.6.3.3.
S14.2.5.8.1 Nomenclature	S6.8.5.6.5 Location of test points	SAE J575, Dec 1988, 4.6.3.3.
S14.2.5.8.1.1 "H–V"	S6.8.5.6.5 Location of test points	SAE J575, Dec 1988, 4.6.3.3.
S14.2.5.8.1.2 "U" "D" "L" "R"	S6.8.5.6.5 Location of test points	SAE J575, Dec 1988, 4.6.3.3.
S14.2.5.8.1.3 Angles	S6.8.5.6.5 Location of test points	SAE J575, Dec 1988, 4.6.3.3.
S14.2.5.9 Beam contributor photometry measurements.	S6.8.5.6.6 Beam contributor photometry	S7.4(a)(3).
S14.2.5.10 Moveable reflector aimed headlamp photometry measurements.	S6.8.5.6.2(h) Aiming—Moveable reflector	New title.
S14.2.5.10.1	S6.8.5.6.2(h) Aiming—Moveable reflector	S7.8.2.2(b).
S14.2.5.10.2	S6.8.5.6.2(h) Aiming—Moveable reflector	S7.8.3.
S14.2.5.10.3	S6.8.5.6.2(h) Aiming—Moveable reflector	S7.8.4.
S14.3 Out of focus test	Table XXII Out of focus test	SAE J575d, Aug 1967, K.
S14.3.1 Procedure	Table XXII Out of focus test—procedure	SAE J575d, Aug 1967, K.
S14.3.2 Performance requirements	Table XXII Out of focus test—performance requirements.	SAE J575d, Aug 1967, K.
S14.4 General test procedures and performance requirements.	New title	New title.
S14.4.1 Color test	Table XXII Color test	SAE J578c, Feb 1977.
S14.4.1.1 Samples	S6.8.2 Samples for test	SAE J594f, Jan 1977, 3.1.8.
S14.4.1.2 General procedure	New title	New title.
S14.4.1.2.1 Design voltage	Table XXII Color test	SAE J578c, Feb 1977, 3.
S14.4.1.2.2 Components	Table XXII Color test	SAE J578c, Feb 1977, 3.
S14.4.1.2.3 Operating temperature	Table XXII Color test	SAE J578c, Feb 1977, A2(b).
S14.4.1.2.4 Visible surface	Table XXII Color test	SAE J578c, Feb 1977, A2(d).
S14.4.1.2.5 Test distance	Table XXII Color test	SAE J578c, Feb 1977, A2(c).
S14.4.1.3 Visual method	Table XXII Color test—procedure	SAE J578c, Feb 1977, 3.1.
S14.4.1.3.1 Procedure	Table XXII Color test—procedure	SAE J578c, Feb 1977, 3.1.
S14.4.1.3.2 Performance requirements	Table XXII Color test—performance requirements.	S5.1.5; SAE J578c, Feb 1977, 3.1.

APPENDIX B.—FMVSS NO. 108 REWRITE CROSS REFERENCE—Continued

Current FMVSS No. 108 or incorporated document citation	FMVSS No. 108 rewrite NPRM citation	FMVSS No. 108 rewrite final rule citation
S14.4.1.3.2.1 Red	Table XXII Color test—performance requirements.	SAE J578c, Feb 1977, 3.1.
S14.4.1.3.2.2 Yellow (Amber)	Table XXII Color test—performance requirements.	SAE J578c, Feb 1977, 3.1.
S14.4.1.3.2.3 White	Table XXII Color test—performance requirements.	SAE J578c, Feb 1977, 3.1.
S14.4.1.4 Tristimulus method	Table XXII Color test—procedure	SAE J578c, Feb 1977, 3.2.
S14.4.1.4.1 Procedure	Table XXII Color test—procedure	SAE J578c, Feb 1977, 3.2.
S14.4.1.4.1.1 Receiver spectral response	Table XXII Color test—procedure	SAE J578c, Feb 1977, 3.2.
S14.4.1.4.1.2 Integrating sphere	Table XXII Color test—procedure	SAE J578c, Feb 1977, 3.2.
S14.4.1.4.1.3 Non uniform color	Table XXII Color test—procedure	SAE J578c, Feb 1977, 3.2.
S14.4.1.4.2 Performance requirements	Table XXII Color test—performance requirements.	S5.1.5; SAE J578c, Feb 1977, 2.1, 2.2, and 2.3.
S14.4.1.4.2.1 Red	Table XXII Color test—performance requirements.	SAE J578c, Feb 1977, 2.1.
S14.4.1.4.2.2 Yellow (Amber)	Table XXII Color test—performance requirements.	SAE J578c, Feb 1977, 2.2.
S14.4.1.4.2.3 White	Table XXII Color test—performance requirements.	SAE J578c, Feb 1977, 2.3.
S14.4.2 Plastic optical materials tests	Table XXII Plastic optical material tests—application.	New title.
S14.4.2.1 Samples	Table XXII Plastic optical material tests—samples.	SAE J576, Jul 1991, 3.2.
S14.4.2.1.1 Molded samples	Table XXII Plastic optical material tests—samples.	SAE J576, Jul 1991, 3.2.1.
S14.4.2.1.2 Exposed area	Table XXII Plastic optical material tests—samples.	SAE J576, Jul 1991, 3.2.1.
S14.4.2.1.3 Thickness	Table XXII Plastic optical material tests—samples.	S5.1.2(d); SAE J576, Jul 1991, 3.2.2.
S14.4.2.1.4 Color	Table XXII Plastic optical material tests—samples.	SAE J576, Jul 1991, 4.1.
S14.4.2.1.5 Control samples	Table XXII Plastic optical material tests—samples.	SAE J576, Jul 1991, 3.2 Note.
S14.4.2.2 Outdoor exposure test	Table XXII Plastic optical material tests	SAE J576, Jul 1991, 3.3.
S14.4.2.2.1 Location and duration	Table XXII Plastic optical material tests	S5.1.2(g); SAE J576, Jul 1991, 3.3.1.
S14.4.2.2.2 Material composition	Table XXII Plastic optical material tests	SAE J576, Jul 1991, 3.1.
S14.4.2.2.3 Procedure	Table XXII Plastic optical material tests—procedure.	SAE J576, Jul 1991, 3.
S14.4.2.2.3.1 Mounting	Table XXII Plastic optical material tests—procedure.	SAE J576, Jul 1991, 3.3.2.
S14.4.2.2.3.2 Cleaning	Table XXII Plastic optical material tests—procedure.	SAE J576, Jul 1991, 3.3.3.
S14.4.2.2.4 Performance requirements	Table XXII Plastic optical material tests—performance requirements.	S5.1.2(a); SAE J576, Jul 1991, 4.2.
S14.4.2.2.4.1 Haze	Table XXII Plastic optical material tests—performance requirements.	S5.1.2(b); S5.1.2(c).
S14.4.2.2.4.1(a) Except reflex	Table XXII Plastic optical material tests—performance requirements.	S5.1.2(b).
S14.4.2.2.4.1(b) Reflex	Table XXII Plastic optical material tests—performance requirements.	S5.1.2(c).
S14.4.2.2.4.2 Headlamps	Table XXII Plastic optical material tests—performance requirements.	SAE J576, Jul 1991, 4.2.3.
S14.4.2.2.4.3 Physical changes	Table XXII Plastic optical material tests—performance requirements.	S5.1.2(c); SAE J576, Jul 1991, 4.2.4.
S14.4.2.2.4.4 Luminous transmittance	Table XXII Plastic optical material tests—performance requirements.	SAE J576, Jul 1991, 3.4.1 and 4.2.1.
S14.4.2.2.4.5 Color test	Table XXII Plastic optical material tests—performance requirements.	SAE J576, Jul 1991, 4.2.2.
S14.4.2.3 Heat test	Table XXII Plastic optical material tests	S5.1.2(e) and (f).
S14.4.2.3.1 Procedure	Table XXII Plastic optical material tests—procedure.	S5.1.2(f).
S14.4.2.3.2 Performance requirements	Table XXII Plastic optical material tests—performance requirements.	S5.1.2(e).
S14.5 Signal lamp and reflective device physical test procedures and performance requirements.	Table XXII	New title.
S14.5.1 Vibration test	Table XXII Vibration test	SAE J575d, Aug 1967, E; SAE J575e, Aug 1970, E.
S14.5.1.1 Procedure	Table XXII Vibration test—procedure	SAE J575d, Aug 1967, E; SAE J575e, Aug 1970, E.

APPENDIX B.—FMVSS NO. 108 REWRITE CROSS REFERENCE—Continued

Current FMVSS No. 108 or incorporated document citation	FMVSS No. 108 rewrite NPRM citation	FMVSS No. 108 rewrite final rule citation
S14.5.1.2 Performance requirements	Table XXII Vibration test—performance requirements.	SAE J575d, Aug 1967, E; SAE J575e, Aug 1970, E.
S14.5.2 Moisture test	Table XXII Moisture test	SAE J575d, Aug 1967, F; SAE J575e, Aug 1970, F.
S14.5.2.1 Procedure	Table XXII Moisture test—procedure	SAE J575d, Aug 1967, F; SAE J575e, Aug 1970, F.
S14.5.2.2 Performance requirements	Table XXII Moisture test—performance requirements.	SAE J575d, Aug 1967, F; SAE J575e, Aug 1970, F.
S14.5.3 Dust test	Table XXII Dust test	SAE J575d, Aug 1967, G; SAE J575e, Aug 1970, G.
S14.5.3.1 Samples	Table XXII Dust test	SAE J575d, Aug 1967, G; SAE J575e, Aug 1970, G.
S14.5.3.2 Procedure	Table XXII Dust test—procedure	SAE J575d, Aug 1967, G; SAE J575e, Aug 1970, G.
S14.5.3.2 Procedure (third sentence)	Table XXII Dust test—performance requirements.	SAE J575d, Aug 1967, G; SAE J575e, Aug 1970, G.
S14.5.3.3 Dust test—performance requirements.	Table XXII Dust test—performance requirements.	SAE J575d, Aug 1967, G; SAE J575e, Aug 1970, G.
S14.5.4 Corrosion test	Table XXII Corrosion test	SAE J575d, Aug 1967, H; SAE J575e, Aug 1970, H.
S14.5.4.1 Procedure	Table XXII Corrosion test—procedure	SAE J575d, Aug 1967, H; SAE J575e, Aug 1970, H.
S14.5.4.2 Performance requirements	Table XXII Corrosion test—performance requirements.	SAE J575d, Aug 1967, H; SAE J575e, Aug 1970, H.
S14.6 Headlamp physical test procedures and performance requirements.	Table XXIII	New title.
S14.6.1 Abrasion test	Table XXIII Abrasion test	S8.2 Abrasion.
S14.6.1.1 Procedure	Table XXIII Abrasion test—procedure	S8.2 Abrasion.
S14.6.1.1.1 Abrading pad	Table XXIII Abrasion test—procedure	S8.2(c)(1) and (3); S8.2(e).
S14.6.1.1.2 Abrading pad alignment	Table XXIII Abrasion test—procedure	S8.2(a) and (c)(4).
S14.6.1.1.3 Abrasion test procedure	Table XXIII Abrasion test—procedure	S8.2(b) and (d).
S14.6.1.2 Performance requirements	Table XXIII Abrasion test—performance requirements.	S7.4(h)(1); S8.1.
S14.6.2 Chemical resistance test	Table XXIII Chemical resistance test	S8.3 Chemical resistance.
S14.6.2.1 Procedure	Table XXIII Chemical resistance test—procedure.	S8.3 Chemical resistance.
S14.6.2.1.1 Test fluids	Table XXIII Chemical resistance test—procedure.	S8.3(b).
S14.6.2.1.2 Fluid application	Table XXIII Chemical resistance test—procedure.	S8.3(a).
S14.6.2.1.3 Test duration	Table XXIII Chemical resistance test—procedure.	S8.3(c).
S14.6.2.2 Performance requirements	Table XXIII Chemical resistance test—performance requirements.	S7.4(h)(2); S8.1.
S14.6.3 Corrosion test	Table XXIII Corrosion test	SAE J580, Dec 1986, 4.1.2 and 5.1.1.2.
S14.6.3.1 Procedure	Table XXIII Corrosion test—procedure	S7.8.5.1(c); SAE J575, Dec 1988, 4.4.
S14.6.3.2 Performance requirements	Table XXIII Corrosion test—performance requirements.	S7.8.5.1(c); SAE J575, Dec 1988, 4.4.
S14.6.4 Corrosion—connector test	Table XXIII Corrosion—connector test	S8.4 Corrosion.
S14.6.4.1 Procedure	Table XXIII Corrosion—connector test—procedure.	S8.4 Corrosion.
S14.6.4.1.1 Connector test	Table XXIII Corrosion—connector test—procedure(a).	S8.4(a).
S14.6.4.1.2 Salt spray	Table XXIII Corrosion—connector test—procedure(b).	S8.4(b).
S14.6.4.1.3 Cycle	Table XXIII Corrosion—connector test—procedure(b).	S8.4(b).
S14.6.4.1.4 Chamber	Table XXIII Corrosion—connector test—procedure(b).	S8.4(b).
S14.6.4.1.5 Wash	Table XXIII Corrosion—connector test—procedure(b).	S8.4(b).
S14.6.4.1.6 Connector test	Table XXIII Corrosion—connector test—procedure(c).	S8.4(c).
S14.6.4.2 Performance requirements	Table XXIII Corrosion—connector test—performance requirements.	S7.4(h)(3).
S14.6.4.2.1 Corrosion	Table XXIII Corrosion—connector test—performance requirements.	S7.4(h)(3).
S14.6.4.2.2 Adhesion	Table XXIII Corrosion—connector test—performance requirements.	S7.4(h)(3).
S14.6.4.2.3 Terminal corrosion	Table XXIII Corrosion—connector test—performance requirements.	S7.4(h)(3).

APPENDIX B.—FMVSS NO. 108 REWRITE CROSS REFERENCE—Continued

Current FMVSS No. 108 or incorporated document citation	FMVSS No. 108 rewrite NPRM citation	FMVSS No. 108 rewrite final rule citation
S14.6.5 Dust test	Table XXIII Dust test	S8.5 Dust.
S14.6.5.1 Procedure	Table XXIII Dust test—procedure	S8.5 Dust.
S14.6.5.1.1 Setup	Table XXIII Dust test—procedure	S8.5 Dust.
S14.6.5.1.2 Cycle	Table XXIII Dust test—procedure	S8.5 Dust.
S14.6.5.1.3 Test duration	Table XXIII Dust test—procedure	S8.5 Dust.
S14.6.5.2 Performance requirements	Table XXIII Dust test—performance requirements.	S7.4(h)(4); S8.1.
S14.6.6 Temperature cycle test and internal heat test.	Table XXIII	S8.6 Temperature and internal heat test.
S14.6.6.1 Samples	Table XXIII Temperature cycle test and internal heat test—procedure.	S8.6 Temperature and internal heat test.
S14.6.6.2 General procedure	Table XXIII Temperature cycle test and internal heat test—procedure.	S8.6 Temperature and internal heat test.
S14.6.6.2.1 General activation	Table XXIII Temperature cycle test and internal heat test—procedure.	S8.6 Temperature and internal heat test.
S14.6.6.2.2 Turn signal activation	Table XXIII Temperature cycle test and internal heat test—procedure.	S8.6 Temperature and internal heat test.
S14.6.6.2.3 Headlamp beam activation	Table XXIII Temperature cycle test and internal heat test—procedure.	S8.6 Temperature and internal heat test.
S14.6.6.3 Temperature cycle test	Table XXIII Temperature cycle test	S8.6.1 Temperature cycle.
S14.6.6.3.1 Procedure	Table XXIII Temperature cycle test—procedure.	S8.6.1 Temperature cycle.
S14.6.6.3.1.1 Cycle	Table XXIII Temperature cycle test—procedure.	S8.6.1 Temperature cycle.
S14.6.6.3.1.2 Activation	Table XXIII Temperature cycle test—procedure.	S8.6.1 Temperature cycle.
S14.6.6.3.1.3 Test chamber(s)	Table XXIII Temperature cycle test—procedure.	S8.6.1 Temperature cycle.
S14.6.6.3.1.4 Vents and drains	Table XXIII Temperature cycle test—procedure.	S8.6.1 Temperature cycle.
S14.6.6.3.2 Performance requirements	Table XXIII Temperature cycle test—performance requirements.	S7.4(h)(5)(i); S8.1.
S14.6.6.4 Internal heat test	Table XXIII Internal heat test	S8.6.2 Internal heat test.
S14.6.6.4.1 Procedure	Table XXIII Internal heat test—procedure	S8.6.2 Internal heat test.
S14.6.6.4.1.1 Photometric output reduction	Table XXIII Internal heat test—procedure	S8.6.2(a).
S14.6.6.4.1.2 HB1 or HB2 light sources	Table XXIII Internal heat test—procedure	S8.6.2(a).
S14.6.6.4.1.3 Photometric measurements	Table XXIII Internal heat test—procedure	S8.6.2(a).
S14.6.6.4.1.4 Setup	Table XXIII Internal heat test—procedure	S8.6.2(b).
S14.6.6.4.1.5 Cycle	Table XXIII Internal heat test—procedure	S8.6.2(b).
S14.6.6.4.1.6 Cleaning	Table XXIII Internal heat test—procedure	S8.6.2(c).
S14.6.6.4.2 Performance requirements	Table XXIII Internal heat test—performance requirements.	S7.4(h)(5)(ii); S8.1.
S14.6.7 Humidity test	Table XXIII Humidity test	New title.
S14.6.7.1 Procedure	Table XXIII Humidity test—procedure	New title.
S14.6.7.1.1 Test fixture	Table XXIII Humidity test—procedure(a)	S8.7(a).
S14.6.7.1.2 Headlamp mounting	Table XXIII Humidity test—procedure(a)	S8.7(a).
S14.6.7.1.3 Setup	Table XXIII Humidity test—procedure(b)	S8.7(b).
S14.6.7.1.4 Cycle	Table XXIII Humidity test—procedure(b)	S8.7(b).
S14.6.7.1.5 Air flow test setup	Table XXIII Humidity test—procedure(c)	S8.7(c).
S14.6.7.1.6 Air flow uniformity	Table XXIII Humidity test—procedure(d)	S8.7(d).
S14.6.7.1.7 Air flow procedure	Table XXIII Humidity test—procedure(e)	S8.7(e).
S14.6.7.1.8 Inspection	Table XXIII Humidity test—procedure(f)	S8.7(f).
S14.6.7.2 Performance requirements	Table XXIII Humidity test—performance requirements.	S7.4(h)(6).
S14.6.8 Vibration test	Table XXIII Vibration test	S8.8 Vibration.
S14.6.8.1 Samples	S6.8.2 [fourth sentence]	SAE J575, Dec 1988, 2.3.
S14.6.8.2 Procedure	Table XXIII Vibration test—procedure	S8.8; SAE J575, Dec 1988, 4.1.
S14.6.8.3 Performance requirements	Table XXIII Vibration test—performance requirements.	S7.3.2(c); S7.3.7(i); S7.3.8(d); S7.4(h)(7).
S14.6.9 Sealing test	Table XXIII Sealing test	S8.9 Sealing.
S14.6.9.1 Procedure	Table XXIII Sealing test—procedure	S8.9 Sealing.
S14.6.9.1.1 Immersion	Table XXIII Sealing test—procedure	S8.9 Sealing.
S14.6.9.1.2 Pressurized immersion	Table XXIII Sealing test—procedure	S8.9 Sealing.
S14.6.9.1.3 Cycle	Table XXIII Sealing test—procedure	S8.9 Sealing.
S14.6.9.1.4 Inspection	Table XXIII Sealing test—procedure	S8.9 Sealing.
S14.6.9.2 Performance requirements	Table XXIII Sealing test—performance requirements.	S7.4(g); S7.5(i); S8.9.
S14.6.10 Chemical resistance of reflectors of replaceable lens headlamps test.	Table XXIII Chemical resistance of reflectors of replaceable lens headlamps test.	S8.10 Chemical and corrosion resistance of reflectors of replaceable lens headlamps.

APPENDIX B.—FMVSS NO. 108 REWRITE CROSS REFERENCE—Continued

Current FMVSS No. 108 or incorporated document citation	FMVSS No. 108 rewrite NPRM citation	FMVSS No. 108 rewrite final rule citation
S14.6.10.1 Procedure	Table XXIII Chemical resistance of reflectors of replaceable lens headlamps test—procedure.	S8.10.1 Chemical resistance.
S14.6.10.1.1 Test fluids	Table XXIII Chemical resistance of reflectors of replaceable lens headlamps test—procedure.	S8.10.1(b).
S14.6.10.1.2 Fluid application	Table XXIII Chemical resistance of reflectors of replaceable lens headlamps test—procedure.	S8.10.1(a).
S14.6.10.1.3 Test duration	Table XXIII Chemical resistance of reflectors of replaceable lens headlamps test—procedure.	S8.10.1(c).
S14.6.10.2 Performance requirements	Table XXIII Chemical resistance of reflectors of replaceable lens headlamps test—performance requirements.	S7.4(h)(2); S8.1.
S14.6.11 Corrosion resistance of reflectors of replaceable lens headlamps test.	Table XXIII Corrosion resistance of reflectors of replaceable lens headlamps test.	S8.10 Chemical and corrosion resistance of reflectors of replaceable lens headlamps.
S14.6.11.1 Procedure	Table XXIII Corrosion resistance of reflectors of replaceable lens headlamps test—procedure.	S8.10.2 Corrosion.
S14.6.11.1.1 Salt spray	Table XXIII Corrosion resistance of reflectors of replaceable lens headlamps test—procedure.	S8.10.2(a).
S14.6.11.1.2 Drying and cleaning	Table XXIII Corrosion resistance of reflectors of replaceable lens headlamps test—procedure.	S8.10.2(b).
S14.6.11.2 Performance requirements	Table XXIII Corrosion resistance of reflectors of replaceable lens headlamps test—performance requirements.	S7.4(h)(3); S8.1.
S14.6.12 Inward force test	Table XXIII Inward force test	S7.8.5.1(b).
S14.6.12.1 Procedure	Table XXIII Inward force test—procedure	SAE J580, Dec 1986, 4.3.
S14.6.12.2 Performance requirements	Table XXIII Inward force test—performance requirements.	S7.8.5.1(b); SAE J580, Dec 1986, 5.1.3.
S14.6.13 Torque deflection test	Table XXIII Torque deflection test	S7.3.8(c) (2); S7.8.5.1(a).
S14.6.13.1 Procedure	Table XXIII Torque deflection test—procedure	S7.3.8(c) (2); S7.8.5.1(a).
S14.6.13.1.1 Mounting	Table XXIII Torque deflection test—procedure	S7.3.8(c) (2); S7.8.5.1(a).
S14.6.13.1.2 Deflectometers	Table XXIII Torque deflection test—procedure	S7.3.8(c)(2); S7.8.5.1(a).
S14.6.13.1.3 Deflectometer adapters	Table XXIII Torque deflection test—procedure	S7.3.8(c)(2); S7.8.5.1(a).
S14.6.13.1.4 Torque	Table XXIII Torque deflection test—procedure	S7.3.8(c) (2); S7.8.5.1(a).
S14.6.13.1.5 Torque application	Table XXIII Torque deflection test—procedure	S7.8.5.1(a).
S14.6.13.1.6 Group I aiming pads	Table XXIII Torque deflection test—procedure	S7.8.5.1(a).
S14.6.13.1.7 Group II aiming pads	Table XXIII Torque deflection test—procedure	S7.8.5.1(a).
S14.6.13.1.8 Non-adjustable locating plates	Table XXIII Torque deflection test—procedure	S7.8.5.1(a).
S14.6.13.2 Performance requirements	Table XXIII Torque deflection test—performance requirements.	S7.8.5.1(a); SAE J580, Dec 1986, 5.1.5.
S14.6.14 Retaining ring test	Table XXIII Retaining ring test	SAE J580, Dec 1986, 5.1.6.
S14.6.14.1 Procedure	Table XXIII Retaining ring test—procedure	S7.3.7(e)(7); SAE J580, Dec 1986, 5.1.6.
S14.6.14.2 Performance requirements	Table XXIII Retaining ring test—performance requirements.	SAE J580, Dec 1986, 5.1.6.
S14.6.15 Headlamp connector test	Table XXIII Headlamp connector test	S7.3.2(b); SAE J580, Dec 1986, Figure 1.
S14.6.15.1 Procedure	Table XXIII Headlamp connector test—procedure.	SAE J580, Dec 1986, 4.4.
S14.6.15.2 Performance requirements	Table XXIII Headlamp connector test—performance requirements.	SAE J580, Dec 1986, 5.1.4.
S14.6.16 Headlamp wattage test	Table XXIII Headlamp wattage test	SAE J1383, Apr 1985, 4.7.
S14.6.16.1 Procedure	Table XXIII Headlamp wattage test—procedure.	SAE J1383, Apr 1985, 4.7.
S14.6.16.2 Performance requirements	Table XXIII Headlamp wattage test—performance requirements.	S7.3.2(d); S7.3.3(b); S7.3.5(b); S7.3.6(b); S7.3.7(g); S7.3.8(e); S7.3.9(b).
S14.6.17 Aiming adjustment test—laboratory	Table XXIII Aiming adjustment test laboratory	S7.8 Aimability Performance Requirements.
S14.6.17.1 Procedure	Table XXIII Aiming adjustment test laboratory—procedure.	SAE J580, Dec 1986, 4.2.
S14.6.17.2 Performance requirements	Table XXIII Aiming adjustment test laboratory—performance requirements.	S7.8.2.1(c); S7.8.2.2(d).
S14.6.17.2.1 Sealed beam except Type F	Table XXIII Aiming adjustment test laboratory—performance requirements.	S7.8.3; S7.8.4; SAE J580, Dec 1986, 5.1.2.1 and 5.1.2.2.
S14.6.17.2.2 Type F, replaceable bulb, integral beam, and combination.	Table XXIII Aiming adjustment test laboratory—performance requirements.	S7.3.7(e)(5); S7.8.3; S7.8.4; SAE J580, Dec 1986, 5.1.2.1 and 5.1.2.2.
S14.6.17.2.3 Moveable reflector	Table XXIII Aiming adjustment test laboratory—performance requirements.	S7.8.2.2(a) and (c).
S14.6.18 Aiming adjustment test—on vehicle	Table XXIII Aiming adjustment test on vehicle	S7.8 Aimability Performance Requirements.

APPENDIX B.—FMVSS NO. 108 REWRITE CROSS REFERENCE—Continued

Current FMVSS No. 108 or incorporated document citation	FMVSS No. 108 rewrite NPRM citation	FMVSS No. 108 rewrite final rule citation
S14.6.18.1 Procedure	Table XXIII Aiming adjustment test on vehicle—procedure.	SAE J580, Dec 1986, 4.2.
S14.6.18.1.1 Setup	Table XXIII Aiming adjustment test on vehicle—procedure.	SAE J580, Dec 1986, 4.2.
S14.6.18.1.2 Vehicle pitch	Table XXIII Aiming adjustment test on vehicle—procedure.	S7.8.3.
S14.6.18.1.3 Adjustments	Table XXIII Aiming adjustment test on vehicle—procedure.	SAE J580, Dec 1986, 4.2.
S14.6.18.2 Performance requirements	Table XXIII Aiming adjustment test on vehicle—performance requirements.	S7.8 Aimability Performance Requirements.
S14.6.18.2.1 Vertical range	Table XXIII Aiming adjustment test on vehicle—performance requirements.	S7.8.3.
S14.6.18.2.2 Continuous vertical adjustment	Table XXIII Aiming adjustment test on vehicle—performance requirements.	S7.8.3.
S14.6.18.2.3 Aim interaction	Table XXIII Aiming adjustment test on vehicle—performance requirements.	S7.8.2.1(a) and (c).
S14.7 Replaceable light source physical test procedures and performance requirements.	Table XXIII	New title.
S14.7.1 Deflection test for replaceable light sources.	Table XXIII Deflection test for replaceable light sources.	S9 Deflection test for replaceable light sources.
S14.7.1.1 Procedure	Table XXIII Deflection test for replaceable light sources—procedure.	S9 Deflection test for replaceable light sources.
S14.7.1.1.1 Force application	Table XXIII Deflection test for replaceable light sources—procedure.	S9 Deflection test for replaceable light sources.
S14.7.1.1.2 Application sequence	Table XXIII Deflection test for replaceable light sources—procedure.	S9 Deflection test for replaceable light sources.
S14.7.1.1.3 Measurement	Table XXIII Deflection test for replaceable light sources—procedure.	S9 Deflection test for replaceable light sources.
S14.7.1.2 Performance requirements	Table XXIII Deflection test for replaceable light sources—performance requirements.	S7.7(g).
S14.7.2 Pressure test for replaceable light sources.	Table XXIII Pressure test for replaceable light sources.	S7.7(c).
S14.7.2.1 Procedure	Table XXIII Pressure test for replaceable light sources—procedure.	S7.7(c).
S14.7.2.1.1 Force application	Table XXIII Pressure test for replaceable light sources—procedure.	S7.7(c).
S14.7.2.1.2 Application sequence	Table XXIII Pressure test for replaceable light sources—procedure.	S7.7(c).
S14.7.2.2 Performance requirements	Table XXIII Pressure test for replaceable light sources—performance requirements.	S7.7(c).
S14.7.3 Replaceable light source power and flux measurement procedure.	S15.2; S15.3	S7.7(b); S7.7(d).
S14.7.3.1 Seasoning	S15.2; S15.3	S7.7(b); S7.7(d).
S14.7.3.1.1 Resistive filament source	S15.2; S15.3	S7.7(b); S7.7(d).
S14.7.3.1.2 Discharge source	S15.2; S15.3	S7.7(b); S7.7(d).
S14.7.3.2 Test voltage	S15.2; S15.3	S7.7(b); S7.7(d).
S14.7.3.3 Luminous flux measurement	S15.2; S15.3	S7.7(b); S7.7(d).
S14.7.3.3.1 Resistive filament light source setup.	S15.2; S15.3	S7.7(b); S7.7(d).
S14.7.3.3.2 Discharge light source setup	S15.2; S15.3	S7.7(b); S7.7(d).
S14.8 Vehicle headlamp aiming device (VHAD) physical test procedures and performance requirements.	Table XXIII	New title.
S14.8.1 Samples	Table XXIII	S7.8.5.2(d)(3)(ii).
S14.8.2 Scale graduation test	Table XXIII VHAD scale graduation test	S7.8.5.2(d)(3)(i).
S14.8.2.1 Procedure	Table XXIII VHAD scale graduation test—procedure.	S7.8.5.2(d)(3)(i).
S14.8.2.2 Performance requirements	Table XXIII VHAD scale graduation test—performance requirements.	S7.8.5.2(d)(3)(i).
S14.8.3 Cold scale graduation test	Table XXIII VHAD cold scale graduation test	S7.8.5.2(d)(3)(ii)(A).
S14.8.3.1 Procedure	Table XXIII VHAD cold scale graduation test—procedure.	S7.8.5.2(d)(3)(ii)(A).
S14.8.3.2 Performance requirements	Table XXIII VHAD cold scale graduation test—performance requirements.	S7.8.5.2(d)(3)(ii)(A).
S14.8.4 Hot scale graduation test	Table XXIII VHAD hot scale graduation test	S7.8.5.2(d)(3)(ii)(B).
S14.8.4.1 Procedure	Table XXIII VHAD hot scale graduation test—procedure.	S7.8.5.2(d)(3)(ii)(B).
S14.8.4.2 Performance requirements	Table XXIII VHAD hot scale graduation test—performance requirements.	S7.8.5.2(d)(3)(ii)(B).
S14.8.5 Thermal cycle test	Table XXIII VHAD thermal cycle test	S7.8.5.2(d)(3)(ii)(C).

APPENDIX B.—FMVSS NO. 108 REWRITE CROSS REFERENCE—Continued

Current FMVSS No. 108 or incorporated document citation	FMVSS No. 108 rewrite NPRM citation	FMVSS No. 108 rewrite final rule citation
S14.8.5.1 Procedure	Table XXIII VHAD thermal cycle test—procedure.	S7.8.5.2(d)(3)(ii)(C).
S14.8.5.2 Performance requirements	Table XXIII VHAD thermal cycle test—performance requirements.	S7.8.5.2(d)(3)(ii)(C).
S14.8.6 Corrosion test	Table XXIII VHAD corrosion test	S7.8.5.2(d)(3)(ii)(D).
S14.8.6.1 Procedure	Table XXIII VHAD corrosion test—procedure	S7.8.5.1(c); SAE J575, Dec 1988, 4.4.
S14.8.6.2 Performance requirements	Table XXIII VHAD corrosion test—performance requirements.	S7.8.5.1(c); SAE J575, Dec 1988, 4.4.
S14.8.7 Photometry test	Table XXIII VHAD photometry test	S7.8.5.2(d)(3)(ii)(E).
S14.8.7.1 Procedure	Table XXIII VHAD photometry test—procedure.	S7.8.5.2(d)(3)(ii)(E).
S14.8.7.2 Performance requirements	Table XXIII VHAD photometry test—performance requirements.	S7.8.5.2(d)(3)(ii)(E).
S14.9 Associated equipment physical test procedures and performance requirements.	Table XXI	New title.
S14.9.1 Turn Signal operating unit durability test.	Table XXI Turn signal operating unit durability test.	SAE J589, Apr 1964.
S14.9.1.1 Power supply specifications	Table XXI Turn signal operating unit durability test—procedure.	SAE J589, Apr 1964.
S14.9.1.2 Procedure	Table XXI Turn signal operating unit durability test—procedure.	SAE J589, Apr 1964.
S14.9.1.2.1 Circuit	Table XXI Turn signal operating unit durability test—procedure.	SAE J589, Apr 1964.
S14.9.1.2.2 Cycle	Table XXI Turn signal operating unit durability test—procedure.	SAE J589, Apr 1964.
S14.9.1.2.3 Voltage drop	Table XXI Turn signal operating unit durability test—procedure.	SAE J589, Apr 1964.
S14.9.1.3 Performance requirements	Table XXI Turn signal operating unit durability test—performance requirements.	S5.1.1.13; SAE J589, Apr 1964.
S14.9.1.3.1 Voltage drop (<2032 mm wide)	Table XXI Turn signal operating unit durability test—performance requirements.	S5.1.1.13.
S14.9.1.3.2 Voltage drop (2032 mm or wider)	Table XXI Turn signal operating unit durability test—performance requirements.	SAE J589, Apr 1964.
S14.9.1.3.3 Stop contacts	Table XXI Turn signal operating unit durability test—performance requirements.	SAE J589, Apr 1964.
S14.9.2 Vehicular hazard warning signal operating unit durability test.	Table XXI Vehicular hazard warning signal operating unit durability test.	SAE J910, Jan 1966.
S14.9.2.1 Procedure	Table XXI Vehicular hazard warning signal operating unit durability test—procedure.	SAE J910, Jan 1966, 4.
S14.9.2.1.1 Circuit	Table XXI Vehicular hazard warning signal operating unit durability test—procedure.	SAE J910, Jan 1966, 4.
S14.9.2.1.2 Cycle	Table XXI Vehicular hazard warning signal operating unit durability test—procedure.	SAE J910, Jan 1966, 4.
S14.9.2.1.3 Voltage drop	Table XXI Vehicular hazard warning signal operating unit durability test—procedure.	SAE J910, Jan 1966, 4.
S14.9.2.2 Performance requirements	Table XXI Vehicular hazard warning signal operating unit durability test—performance requirements.	SAE J910, Jan 1966, 4.
S14.9.3 Turn signal flasher and vehicular hazard warning signal warning flasher tests.	Table XXI Turn signal flasher and vehicular hazard warning signal flasher tests.	SAE J590b, Oct 1965; SAE J945, Feb 1966.
S14.9.3.1 Standard test circuit	SAE J823b, Apr 1968	SAE J823b, Apr 1968.
S14.9.3.1.1 Test circuit setup	SAE J823b, Apr 1968	SAE J823b, Apr 1968.
S14.9.3.1.1.1 Series resistance	SAE J823b, Apr 1968, 4	SAE J823b, Apr 1968, 4.
S14.9.3.1.1.2 A–B resistance	SAE J823b, Apr 1968, 5	SAE J823b, Apr 1968, 5.
S14.9.3.1.1.3 C–D voltage	SAE J823b, Apr 1968, 6	SAE J823b, Apr 1968, 6.
S14.9.3.1.1.4 Voltage adjustments—fixed load flashers.	SAE J823b, Apr 1968, 7	SAE J823b, Apr 1968, 7.
S14.9.3.1.1.5 Voltage adjustments—variable load flashers.	SAE J823b, Apr 1968, 8	SAE J823b, Apr 1968, 8.
S14.9.3.1.1.6 Measurements	SAE J823b, Apr 1968, 8	SAE J823b, Apr 1968, 8.
S14.9.3.2 Power supply specifications	SAE J823b, Apr 1968, 10 and 11	SAE J823b, Apr 1968, 10 and 11.
S14.9.3.2.1 Starting time, voltage drop, and flash rate & percent current "on" time tests.	SAE J590b, Oct 1965, 10	SAE J823b, Apr 1968, 10.
S14.9.3.2.1(a) Transients	SAE J590b, Oct 1965, 10	SAE J823b, Apr 1968, 10.
S14.9.3.2.1(b) Output voltage	SAE J823b, Apr 1968, 10(a)	SAE J823b, Apr 1968, 10(a).
S14.9.3.2.1(c) Output current	SAE J823b, Apr 1968, 10(b)	SAE J823b, Apr 1968, 10(b).
S14.9.3.2.1(d) Static regulation	SAE J823b, Apr 1968, 10(c)	SAE J823b, Apr 1968, 10(c).
S14.9.3.2.1(e) Dynamic regulation	SAE J823b, Apr 1968, 10(c)	SAE J823b, Apr 1968, 10(c).
S14.9.3.2.1(f) Ripple voltage	SAE J823b, Apr 1968, 10(d)	SAE J823b, Apr 1968, 10(d).
S14.9.3.2.2 Durability tests	SAE J590b, Oct 1965, 11	SAE J823b, Apr 1968, 11.
S14.9.3.2.2(a) Transients	SAE J590b, Oct 1965, 11	SAE J823b, Apr 1968, 11.

APPENDIX B.—FMVSS NO. 108 REWRITE CROSS REFERENCE—Continued

Current FMVSS No. 108 or incorporated document citation	FMVSS No. 108 rewrite NPRM citation	FMVSS No. 108 rewrite final rule citation
S14.9.3.2.2(b) Output voltage	SAE J590b, Oct 1965, 11(a)	SAE J823b, Apr 1968, 11(a).
S14.9.3.2.2(c) Output current	SAE J590b, Oct 1965, 11(b)	SAE J823b, Apr 1968, 11(b).
S14.9.3.2.2(d) Static regulation	SAE J590b, Oct 1965, 11(c)	SAE J823b, Apr 1968, 11(c).
S14.9.3.2.2(e) Dynamic regulation	SAE J590b, Oct 1965, 11(c)	SAE J823b, Apr 1968, 11(c).
S14.9.3.2.2(f) Ripple voltage	SAE J590b, Oct 1965, 11(d)	SAE J823b, Apr 1968, 11(d).
S14.9.3.3 Turn signal flasher starting time test	Table XXI Turn signal flasher starting time test.	SAE J590b, Oct 1965, 1.
S14.9.3.3.1 Samples	Table XXI Turn signal flasher starting time test—procedure.	SAE J590b, Oct 1965.
S14.9.3.3.2 Procedure	Table XXI Turn signal flasher starting time test—procedure.	SAE J590b, Oct 1965, 1.
S14.9.3.3.2.1 Setup	Table XXI Turn signal flasher starting time test—procedure.	S5.1.1.19; SAE J590b, Oct 1965, 1.
S14.9.3.3.2.2 Measurement	Table XXI Turn signal flasher starting time test—procedure.	SAE J590b, Oct 1965, 1.
S14.9.3.3.3 Performance requirements	Table XXI Turn signal flasher starting time test—performance requirements.	SAE J590b, Oct 1965, 1.
S14.9.3.3.3(a) Normally closed contacts	Table XXI Turn signal flasher starting time test—performance requirements.	SAE J590b, Oct 1965, 1.
S14.9.3.3.3(b) Normally open contacts	Table XXI Turn signal flasher starting time test—performance requirements.	SAE J590b, Oct 1965, 1.
S14.9.3.4 Turn signal flasher voltage drop test	Table XXI Turn signal flasher voltage drop test.	SAE J590b, Oct 1965.
S14.9.3.4.1 Samples	Table XXI Turn signal flasher voltage drop test—procedure.	SAE J590b, Oct 1965.
S14.9.3.4.2 Procedure	Table XXI Turn signal flasher voltage drop test—procedure.	SAE J590b, Oct 1965, 2.
S14.9.3.4.2.1 Setup	Table XXI Turn signal flasher voltage drop test—procedure.	S5.1.1.19; SAE J590b, Oct 1965, 2.
S14.9.3.4.2.2 Measurement	Table XXI Turn signal flasher voltage drop test—procedure.	SAE J590b, Oct 1965, 2.
S14.9.3.4.3 Performance requirements	Table XXI Turn signal flasher voltage drop test—performance requirements.	S5.1.1.20; SAE J590b, Oct 1965.
S14.9.3.5 Turn signal flasher flash rate and percent current ''on'' time test.	Table XXI Turn signal flasher flash rate and percent current ''on'' time test.	SAE J590b, Oct 1965.
S14.9.3.5.1 Samples	Table XXI Turn signal flasher flash rate and percent current ''on'' time test—procedure.	SAE J590b, Oct 1965, 3.
S14.9.3.5.2 Procedure	Table XXI Turn signal flasher flash rate and percent current ''on'' time test—procedure.	SAE J590b, Oct 1965, 3.
S14.9.3.5.2.1 Setup	Table XXI Turn signal flasher flash rate and percent current ''on'' time test—procedure.	S5.1.1.19; SAE J590b, Oct 1965, 3.
S14.9.3.5.2.2 Temperature and voltage	Table XXI Turn signal flasher flash rate and percent current ''on'' time test—procedure.	SAE J590b, Oct 1965, 3.
S14.9.3.5.2.3 Measurement	Table XXI Turn signal flasher flash rate and percent current ''on'' time test—procedure.	SAE J590b, Oct 1965, 3.
S14.9.3.5.3 Performance requirements	Table XXI Turn signal flasher flash rate and percent current ''on'' time test—performance requirements.	SAE J590b, Oct 1965, 3.
S14.9.3.5.3(a) Normally closed contacts	Table XXI Turn signal flasher flash rate and percent current ''on'' time test—performance requirements.	SAE J590b, Oct 1965, 3.
S14.9.3.5.3(b) Normally open contacts	Table XXI Turn signal flasher flash rate and percent current ''on'' time test—performance requirements.	SAE J590b, Oct 1965, 3.
S14.9.3.6 Turn signal flasher durability test	Table XXI Turn signal flasher durability test	SAE J590b, Oct 1965.
S14.9.3.6.1 Samples	Table XXI Turn signal flasher durability test—procedure.	SAE J590b, Oct 1965.
S14.9.3.6.2 Procedure	Table XXI Turn signal flasher durability test—procedure.	SAE J590b, Oct 1965.
S14.9.3.6.2.1 Setup	Table XXI Turn signal flasher durability test—procedure.	SAE J590b, Oct 1965.
S14.9.3.6.2.2 Temperature and voltage	Table XXI Turn signal flasher durability test—procedure.	SAE J590b, Oct 1965.
S14.9.3.6.2.3 Duration	Table XXI Turn signal flasher durability test—procedure.	SAE J590b, Oct 1965.
S14.9.3.6.3 Performance requirements	Table XXI Turn signal flasher durability test—performance requirements.	SAE J590b, Oct 1965.
S14.9.3.7 Vehicular hazard warning signal flasher starting time test.	Table XXI Vehicular hazard warning signal flasher starting time test.	SAE J945, Feb 1966.
S14.9.3.7.1 Samples	Table XXI Vehicular hazard warning signal flasher starting time test—procedure.	SAE J945, Feb 1966.

APPENDIX B.—FMVSS NO. 108 REWRITE CROSS REFERENCE—Continued

Current FMVSS No. 108 or incorporated document citation	FMVSS No. 108 rewrite NPRM citation	FMVSS No. 108 rewrite final rule citation
S14.9.3.7.2 Procedure	Table XXI Vehicular hazard warning signal flasher starting time test—procedure.	SAE J945, Feb 1966, 1.
S14.9.3.7.2.1 Setup	Table XXI Vehicular hazard warning signal flasher starting time test—procedure.	SAE J945, Feb 1966, 1.
S14.9.3.7.2.2 Measurement	Table XXI Vehicular hazard warning signal flasher starting time test—procedure.	SAE J945, Feb 1966, 1.
S14.9.3.7.3 Performance requirements	Table XXI Vehicular hazard warning signal flasher starting time test—performance requirements.	SAE J945, Feb 1966, 1.
S14.9.3.7.3(a) Normally closed contacts	Table XXI Vehicular hazard warning signal flasher starting time test—performance requirements.	SAE J945, Feb 1966, 1.
S14.9.3.7.3(b) Normally open contacts	Table XXI Vehicular hazard warning signal flasher starting time test—performance requirements.	SAE J945, Feb 1966, 1.
S14.9.3.8 Vehicular hazard warning signal flasher voltage drop test.	Table XXI Vehicular hazard warning signal flasher voltage drop test.	SAE J945, Feb 1966.
S14.9.3.8.1 Samples	Table XXI Vehicular hazard warning signal flasher voltage drop test—procedure.	SAE J945, Feb 1966.
S14.9.3.8.2 Procedure	Table XXI Vehicular hazard warning signal flasher voltage drop test—procedure.	SAE J945, Feb 1966, 2.
S14.9.3.8.2.1 Setup	Table XXI Vehicular hazard warning signal flasher voltage drop test—procedure.	SAE J945, Feb 1966, 2.
S14.9.3.8.2.2 Measurement	Table XXI Vehicular hazard warning signal flasher voltage drop test—procedure.	SAE J945, Feb 1966, 2.
S14.9.3.8.3 Performance requirements	Table XXI Vehicular hazard warning signal flasher voltage drop test—performance requirements.	S5.1.1.20; SAE J945, Feb 1966.
S14.9.3.9 Vehicular hazard warning signal flasher flash rate and percent current ''on'' time test.	Table XXI Vehicular hazard warning signal flasher flash rate and percent current ''on'' time test.	SAE J945, Feb 1966.
S14.9.3.9.1 Samples	Table XXI Vehicular hazard warning signal flasher flash rate and percent current ''on'' time test—procedure.	SAE J945, Feb 1966.
S14.9.3.9.2 Procedure	Table XXI Vehicular hazard warning signal flasher flash rate and percent current ''on'' time test—procedure.	SAE J945, Feb 1966, 3.
S14.9.3.9.2.1 Setup	Table XXI Vehicular hazard warning signal flasher flash rate and percent current ''on'' time test—procedure.	SAE J945, Feb 1966, 3.
S14.9.3.9.2.2 Temperature and voltage	Table XXI Vehicular hazard warning signal flasher flash rate and percent current ''on'' time test—procedure.	SAE J945, Feb 1966, 3.
S14.9.3.9.2.3 Measurement	Table XXI Vehicular hazard warning signal flasher flash rate and percent current ''on'' time test—procedure.	SAE J945, Feb 1966, 3.
S14.9.3.9.3 Performance requirements	Table XXI Vehicular hazard warning signal flasher flash rate and percent current ''on'' time test—performance requirements.	SAE J945, Feb 1966, 3.
S14.9.3.9.3(a) Normally closed contacts	Table XXI Vehicular hazard warning signal flasher flash rate and percent current ''on'' time test—performance requirements.	SAE J945, Feb 1966, 3.
S14.9.3.9.3(b) Normally open contacts	Table XXI Vehicular hazard warning signal flasher flash rate and percent current ''on'' time test—performance requirements.	SAE J945, Feb 1966, 3.
S14.9.3.10 Vehicular hazard warning signal flasher durability test.	Table XXI Vehicular hazard warning signal flasher durability test.	SAE J945, Feb 1966.
S14.9.3.10.1 Samples	Table XXI Vehicular hazard warning signal flasher durability test—procedure.	SAE J945, Feb 1966, 4.
S14.9.3.10.2 Procedure	Table XXI Vehicular hazard warning signal flasher durability test—procedure.	SAE J945, Feb 1966, 4.
S14.9.3.10.2.1 Setup	Table XXI Vehicular hazard warning signal flasher durability test—procedure.	SAE J945, Feb 1966, 4.
S14.9.3.10.2.2 Temperature and voltage	Table XXI Vehicular hazard warning signal flasher durability test—procedure.	SAE J945, Feb 1966, 4.
S14.9.3.10.2.3 Duration	Table XXI Vehicular hazard warning signal flasher durability test—procedure.	SAE J945, Feb 1966, 4.
S14.9.3.10.3 Performance requirements	Table XXI Vehicular hazard warning signal flasher durability test—performance requirements.	SAE J945, Feb 1966, 4.

APPENDIX B.—FMVSS NO. 108 REWRITE CROSS REFERENCE—Continued

Current FMVSS No. 108 or incorporated document citation	FMVSS No. 108 rewrite NPRM citation	FMVSS No. 108 rewrite final rule citation
S14.9.3.11 Semiautomatic headlamp beam switching device tests.	Table XXI Semiautomatic headlamp beam switching device tests.	SAE J565b, Feb 1969.
S14.9.3.11.1 Test conditions	Table XXI Semiautomatic headlamp beam switching device tests—applicable item.	SAE J565b, Feb 1969, 4.2.
S14.9.3.11.2 Sensitivity test	Table XXI Semiautomatic headlamp beam switching device sensitivity test.	SAE J565b, Feb 1969, 4.
S14.9.3.11.2.1 Samples	Table XXI Semiautomatic headlamp beam switching device sensitivity test—procedure.	SAE J565b, Feb 1969, 4.1.
S14.9.3.11.2.2 Procedure	Table XXI Semiautomatic headlamp beam switching device sensitivity test—procedure.	SAE J565b, Feb 1969, 4.2.
S14.9.3.11.2.2.1 Adjustment	Table XXI Semiautomatic headlamp beam switching device sensitivity test—procedure.	SAE J565b, Feb 1969, 4.2.
S14.9.3.11.2.2.2 Switching	Table XXI Semiautomatic headlamp beam switching device sensitivity test—procedure.	SAE J565b, Feb 1969, 4.2.
S14.9.3.11.2.2.3 Sensitivity curves	Table XXI Semiautomatic headlamp beam switching device sensitivity test—procedure.	SAE J565b, Feb 1969, 4.2.
S14.9.3.11.2.3 Performance requirements	Table XXI Semiautomatic headlamp beam switching device sensitivity test—performance requirements.	SAE J565b, Feb 1969, 4.2.
S14.9.3.11.2.3.1 Operating limits	Table XXI Semiautomatic headlamp beam switching device sensitivity test—performance requirements.	SAE J565b, Feb 1969, 4.2.
S14.9.3.11.2.3.2 Sensitivity voids	Table XXI Semiautomatic headlamp beam switching device sensitivity test—performance requirements.	SAE J565b, Feb 1969, 4.2.
S14.9.3.11.3 Voltage regulation test	Table XXI Semiautomatic headlamp beam switching device voltage regulation test.	SAE J565b, Feb 1969, 4.3.
S14.9.3.11.3.1 Procedure	Table XXI Semiautomatic headlamp beam switching device voltage regulation test—procedure.	SAE J565b, Feb 1969, 4.3.
S14.9.3.11.3.1.1 Adjustment	Table XXI Semiautomatic headlamp beam switching device voltage regulation test—procedure.	SAE J565b, Feb 1969, 4.3.
S14.9.3.11.3.1.2 Measurement	Table XXI Semiautomatic headlamp beam switching device voltage regulation test—procedure.	SAE J565b, Feb 1969, 4.3.
S14.9.3.11.3.2 Performance requirements	Table XXI Semiautomatic headlamp beam switching device voltage regulation test—performance requirements.	SAE J565b, Feb 1969, 4.3.
S14.9.3.11.4 Manual override test	Table XXI Semiautomatic headlamp beam switching device manual override test.	SAE J565b, Feb 1969, 4.4.
S14.9.3.11.4.1 Procedure	Table XXI Semiautomatic headlamp beam switching device manual override test—procedure.	SAE J565b, Feb 1969, 4.4.
S14.9.3.11.4.1.1 Adjustment	Table XXI Semiautomatic headlamp beam switching device manual override test—procedure.	SAE J565b, Feb 1969, 4.4.
S14.9.3.11.4.1.2 Exposure	Table XXI Semiautomatic headlamp beam switching device manual override test—procedure.	SAE J565b, Feb 1969, 4.4.
S14.9.3.11.4.1.3 Override	Table XXI Semiautomatic headlamp beam switching device manual override test—procedure.	SAE J565b, Feb 1969, 4.4.
S14.9.3.11.4.1.4 Switch to upper beam	Table XXI Semiautomatic headlamp beam switching device manual override test—procedure.	SAE J565b, Feb 1969, 4.4.
S14.9.3.11.4.1.5 Switch to lower beam	Table XXI Semiautomatic headlamp beam switching device manual override test—procedure.	SAE J565b, Feb 1969, 4.4.
S14.9.3.11.4.2 Performance requirements	Table XXI Semiautomatic headlamp beam switching device manual override test—performance requirements.	SAE J565b, Feb 1969, 4.4.
S14.9.3.11.5 Warmup test	Table XXI Semiautomatic headlamp beam switching device warmup test.	SAE J565b, Feb 1969, 4.5.
S14.9.3.11.5.1 Procedure	Table XXI Semiautomatic headlamp beam switching device warmup test—procedure.	SAE J565b, Feb 1969, 4.5.
S14.9.3.11.5.1.1 Adjustment	Table XXI Semiautomatic headlamp beam switching device warmup test—procedure.	SAE J565b, Feb 1969, 4.5.
S14.9.3.11.5.1.2 Measurement	Table XXI Semiautomatic headlamp beam switching device warmup test—procedure.	SAE J565b, Feb 1969, 4.5.

APPENDIX B.—FMVSS NO. 108 REWRITE CROSS REFERENCE—Continued

Current FMVSS No. 108 or incorporated document citation	FMVSS No. 108 rewrite NPRM citation	FMVSS No. 108 rewrite final rule citation
S14.9.3.11.5.2 Performance requirements	Table XXI Semiautomatic headlamp beam switching device warmup test—performance requirements.	SAE J565b, Feb 1969, 4.5.
S14.9.3.11.6 Temperature test	Table XXI Semiautomatic headlamp beam switching device temperature test.	SAE J565b, Feb 1969, 4.7.
S14.9.3.11.6.1 Procedure	Table XXI Semiautomatic headlamp beam switching device temperature test—procedure.	SAE J565b, Feb 1969, 4.7.
S14.9.3.11.6.1.1 Exposure	Table XXI Semiautomatic headlamp beam switching device temperature test—procedure.	SAE J565b, Feb 1969, 4.7.
S14.9.3.11.6.1.2 Temperature	Table XXI Semiautomatic headlamp beam switching device temperature test—procedure.	SAE J565b, Feb 1969, 4.7.
S14.9.3.11.6.1.3 Measurement	Table XXI Semiautomatic headlamp beam switching device temperature test—procedure.	SAE J565b, Feb 1969, 4.7.
S14.9.3.11.6.2 Performance requirements	Table XXI Semiautomatic headlamp beam switching device temperature test—performance requirements.	SAE J565b, Feb 1969, 4.7.
S14.9.3.11.7 Dust test	Table XXI Semiautomatic headlamp beam switching device dust test.	SAE J565b, Feb 1969, 4.8.
S14.9.3.11.7.1 Procedure	Table XXI Semiautomatic headlamp beam switching device dust test—procedure.	SAE J565b, Feb 1969, 4.8.
S14.9.3.11.7.1.1 Sensitivity	Table XXI Semiautomatic headlamp beam switching device dust test—procedure.	SAE J565b, Feb 1969, 4.8.
S14.9.3.11.7.1.2 Dust exposure	Table XXI Semiautomatic headlamp beam switching device dust test—procedure.	SAE J565b, Feb 1969, 4.8.
S14.9.3.11.7.1.3 Measurement	Table XXI Semiautomatic headlamp beam switching device dust test—procedure.	SAE J565b, Feb 1969, 4.8.
S14.9.3.11.7.2 Performance requirements	Table XXI Semiautomatic headlamp beam switching device dust test—performance requirements.	SAE J565b, Feb 1969, 4.8.
S14.9.3.11.8 Corrosion test	Table XXI Semiautomatic headlamp beam switching device corrosion test.	SAE J565b, Feb 1969, 4.9.
S14.9.3.11.8.1 Procedure	Table XXI Semiautomatic headlamp beam switching device corrosion test—procedure.	SAE J565b, Feb 1969, 4.9.
S14.9.3.11.8.1.1 Sensitivity	Table XXI Semiautomatic headlamp beam switching device corrosion test—procedure.	SAE J565b, Feb 1969, 4.9.
S14.9.3.11.8.1.2 Applicability	Table XXI Semiautomatic headlamp beam switching device corrosion test—procedure.	SAE J565b, Feb 1969, 4.9.
S14.9.3.11.8.1.3 Sockets	Table XXI Semiautomatic headlamp beam switching device corrosion test—procedure.	SAE J565b, Feb 1969, 4.9.
S14.9.3.11.8.1.4 Measurement	Table XXI Semiautomatic headlamp beam switching device corrosion test—procedure.	SAE J565b, Feb 1969, 4.9.
S14.9.3.11.8.2 Performance requirements	Table XXI Semiautomatic headlamp beam switching device corrosion test—performance requirements.	SAE J565b, Feb 1969, 4.9.
S14.9.3.11.9 Vibration test	Table XXI Semiautomatic headlamp beam switching device vibration test.	SAE J565b, Feb 1969, 4.10.
S14.9.3.11.9.1 Procedure	Table XXI Semiautomatic headlamp beam switching device vibration test—procedure.	SAE J565b, Feb 1969, 4.10.
S14.9.3.11.9.1.1 Sensitivity	Table XXI Semiautomatic headlamp beam switching device vibration test—procedure.	SAE J565b, Feb 1969, 4.10.
S14.9.3.11.9.1.2 Acceleration	Table XXI Semiautomatic headlamp beam switching device vibration test—procedure.	SAE J565b, Feb 1969, 4.10(a).
S14.9.3.11.9.1.3 Frequency	Table XXI Semiautomatic headlamp beam switching device vibration test—procedure.	SAE J565b, Feb 1969, 4.10(b).
S14.9.3.11.9.1.4 Operation	Table XXI Semiautomatic headlamp beam switching device vibration test—procedure.	SAE J565b, Feb 1969, 4.10(c).
S14.9.3.11.9.1.5 Measurement	Table XXI Semiautomatic headlamp beam switching device vibration test—procedure.	SAE J565b, Feb 1969, 4.10.
S14.9.3.11.9.2 Performance requirements	Table XXI Semiautomatic headlamp beam switching device vibration test—performance requirements.	SAE J565b, Feb 1969, 4.10.
S14.9.3.11.9.2.1 Beam switching	Table XXI Semiautomatic headlamp beam switching device vibration test—performance requirements.	SAE J565b, Feb 1969, 4.10.
S14.9.3.11.9.2.2 Mechanical aim	Table XXI Semiautomatic headlamp beam switching device vibration test—performance requirements.	SAE J565b, Feb 1969, 4.10.

APPENDIX B.—FMVSS NO. 108 REWRITE CROSS REFERENCE—Continued

Current FMVSS No. 108 or incorporated document citation	FMVSS No. 108 rewrite NPRM citation	FMVSS No. 108 rewrite final rule citation
S14.9.3.11.10 Sunlight test	Table XXI Semiautomatic headlamp beam switching device sunlight test.	SAE J565b, Feb 1969, 4.11.
S14.9.3.11.10.1 Procedure	Table XXI Semiautomatic headlamp beam switching device sunlight test—procedure.	SAE J565b, Feb 1969, 4.11.
S14.9.3.11.10.1.1 Exposure	Table XXI Semiautomatic headlamp beam switching device sunlight test—procedure.	SAE J565b, Feb 1969, 4.11.
S14.9.3.11.10.1.2 Rest	Table XXI Semiautomatic headlamp beam switching device sunlight test—procedure.	SAE J565b, Feb 1969, 4.11.
S14.9.3.11.10.2 Performance requirements	Table XXI Semiautomatic headlamp beam switching device sunlight test—performance requirements.	SAE J565b, Feb 1969, 4.11.
S14.9.3.11.11 Durability test	Table XXI Semiautomatic headlamp beam switching device durability test.	SAE J565b, Feb 1969, 4.12.
S14.9.3.11.11.1 Procedure	Table XXI Semiautomatic headlamp beam switching device durability test—procedure.	SAE J565b, Feb 1969, 4.12.
S14.9.3.11.11.1.1 Sensitivity	Table XXI Semiautomatic headlamp beam switching device durability test—procedure.	SAE J565b, Feb 1969, 4.12.
S14.9.3.11.11.1.2 Cycle	Table XXI Semiautomatic headlamp beam switching device durability test—procedure.	SAE J565b, Feb 1969, 4.12(a) and (b).
S14.9.3.11.11.1.3 Measurement	Table XXI Semiautomatic headlamp beam switching device durability test—procedure.	SAE J565b, Feb 1969, 4.12.
S14.9.3.11.11.2 Performance requirements	Table XXI Semiautomatic headlamp beam switching device durability test—performance requirements.	SAE J565b, Feb 1969, 4.12.
S14.9.3.11.12 Return to upper beam test	Table XXI Semiautomatic headlamp beam switching device return to upper beam test.	SAE J565b, Feb 1969, 4.15.
S14.9.3.11.12.1 Procedure	Table XXI Semiautomatic headlamp beam switching device return to upper beam test—procedure.	SAE J565b, Feb 1969, 4.15.
S14.9.3.11.12.1.1 Sensitivity	Table XXI Semiautomatic headlamp beam switching device return to upper beam test—procedure.	SAE J565b, Feb 1969, 4.15.
S14.9.3.11.12.1.2 Exposure	Table XXI Semiautomatic headlamp beam switching device return to upper beam test—procedure.	SAE J565b, Feb 1969, 4.15.
S14.9.3.11.12.2 Performance requirements	Table XXI Semiautomatic headlamp beam switching device return to upper beam test—performance requirements.	SAE J565b, Feb 1969, 4.15.
Figure 1	Figure 1	SAE J578c, Feb 1977, Figure 1.
Figure 2	Figure 2	SAE J590b, Oct 1965, Figure 1.
Figure 2	Figure 2	SAE J945, Feb 1966, Figure 1.
Figure 3	Figure 3	Figure 4–1.
Figure 3	Figure 3	Figure 4–2.
Figure 3	Figure 3	Figure 4–3.
Figure 3	Figure 3	Figure 4–4.
Figure 4	Figure 4	SAE J580, Dec 1986, Figure 1.
Figure 5	Figure 5	Figure 5.
Figure 6	Figure 6	Figure 6.
Figure 7	Figure 7	Figure 7.
Figure 8	Figure 8	Figure 8.
Figure 9	Figure 9	Figure 9.
Figure 10	Figure 10	Figure 25.
Figure 11	Figure 11	Figure 30–1.
Figure 11	Figure 11	Figure 30–2.
Figure 11	Figure 11	Figure 30–3.
Figure 11	Figure 11	Figure 30–4.
Figure 12–1	Figure 12–1	New.
Figure 12–2	Figure 12–2	New.
Figure 13	Figure 13	Figure 31.
Figure 14	Figure 14	Figure 16.
Figure 15	Figure 15	Figure 22.
Figure 16	Figure 16	SAE J580, Dec 1986, Figure 3.
Figure 17	Figure 17	SAE J580, Dec 1986, Figure 4.
Figure 18	Figure 18	SAE J580, Dec 1986, Figure 2.
Figure 19	Table XIII	SAE J587, Oct 1981, Figures 1 & 2.
Figure 20	Not included	SAE J587, Oct 1981, Figure 3.
Figure 21	SAE J577, Apr 1964, Figure 1 and Table 1	SAE J577, Apr 1964, Figure 1 and Table 1.
Figure 22	SAE J823b, Apr 1968, Figure 1	SAE J823b, Apr 1968, Figure 1.
Table I–a Activation Taillamps	Table I Activation Taillamps	S5.5.10(d).
Table I–a Activation Taillamps	Table I Activation Taillamps	S5.5.3.
Table I–a Activation Taillamps	Table I Activation Taillamps	S5.5.7(a).

APPENDIX B.—FMVSS NO. 108 REWRITE CROSS REFERENCE—Continued

Current FMVSS No. 108 or incorporated document citation	FMVSS No. 108 rewrite NPRM citation	FMVSS No. 108 rewrite final rule citation
Table I–a Activation Taillamps	Table I Activation Taillamps	S5.5.7(b).
Table I–a Activation—Backup lamps	Table I Activation—Backup lamps	S5.5.10(d).
Table I–a Activation—Backup lamps	Table I Activation—Backup lamps	SAE J593c, Feb 1968.
Table I–a Activation—Clearance lamps	Table I Activation—Clearance lamps	S5.5.10(d).
Table I–a Activation—DRL	Table I Activation—DRL	S5.5.10(d).
Table I–a Activation—DRL	Table I Activation—DRL	S5.5.11(a) Daytime running lamps (DRL).
Table I–a Activation—DRL	Table I Activation—DRL	S5.5.11(a)(5).
Table I–a Activation—Headlamp	Table I Activation—Headlamp	S5.5.8.
Table I–a Activation—Headlamp	Table I Activation—Headlamp	S5.5.9.
Table I–a Activation—Headlamp	Table I Activation—Headlamp	S5.5.10(b).
Table I–a Activation—Headlamp	Table I Activation—Headlamp	S5.5.10(d).
Table I–a Activation—High mounted stop lamps	Table I Activation—High mounted stop lamps	S5.5.10(d).
Table I–a Activation—Identification lamps	Table I Activation—Identification lamps	S5.5.10(d).
Table I–a Activation—License plate lamps	Table I Activation—License plate lamps	S5.5.10(d).
Table I–a Activation—License plate lamps	Table I Activation—License plate lamps	S5.5.7(a).
Table I–a Activation—License plate lamps	Table I Activation—License plate lamps	S5.5.7(b).
Table I–a Activation—Parking lamps	Table I Activation—Parking lamps	S5.5.10(d).
Table I–a Activation—Parking lamps	Table I Activation—Parking lamps	S5.5.7(a).
Table I–a Activation—Parking lamps	Table I Activation—Parking lamps	S5.5.7(b).
Table I–a Activation—High mounted stop lamps	Table I Activation—High mounted stop lamps	S5.5.4.
Table I–a Activation—School bus signal lamps	Table I Activation—School bus signal lamps	S5.1.4(b)(ii).
Table I–a Activation—School bus signal lamps	Table I Activation—School bus signal lamps	S5.5.10(a).
Table I–a Activation—School bus signal lamps	Table I Activation—School bus signal lamps	SAE J887, Jul 1964.
Table I–a Activation—Side marker lamps	Table I Activation—Side marker lamps	S5.5.10(b).
Table I–a Activation—Side marker lamps	Table I Activation—Side marker lamps	S5.5.10(d).
Table I–a Activation—Side marker lamps	Table I Activation—Side marker lamps	S5.5.7(a).
Table I–a Activation—Side marker lamps	Table I Activation—Side marker lamps	S5.5.7(b).
Table I–a Activation—Stop lamps	Table I Activation—Stop lamps	Interpretation—Faber 5/26/00.
Table I–a Activation—Stop lamps	Table I Activation—Stop lamps	S5.1.1.11 Stop lamp and turn signal lamp activation interaction.
Table I–a Activation—Stop lamps	Table I Activation—Stop lamps	S5.5.4.
Table I–a Activation—Turn signals	Table I Activation—Turn signals	S5.5.10(a).
Table I–a Lighting device	Table I Lighting device	S5.1.1.27(a).
Table I–a Lighting device	Table I Lighting device	S5.1.1.27(b).
Table I–a Lighting device	Table I Lighting device	S5.1.1.4 Alternative side reflex material.
Table I–a Lighting device	Table I Lighting device	S5.5.11(a) Daytime running lamps (DRL).
Table I–a Lighting device	Table I Lighting device	S5.5.11(a)(3).
Table I–a Lighting device	Table I Lighting device	S5.5.11(b).
Table I–a Lighting device	Table I Lighting device	Table I.
Table I–a Lighting device	Table I Lighting device	Table II.
Table I–a Lighting device	Table I Lighting device	Table III.
Table I–a Lighting device	Table I Lighting device	Table IV.
Table I–a Additional Lamps Required on All School Buses except Multifunction School Activity Buses.	Table I Additional Lamps Required on All School Buses except Multifunction School Activity Buses.	S5.1.4 School bus signal lamps.
Table I–a Mounting height	Table I Mounting height	S5.5.11(b).
Table I–a Mounting height	Table I Mounting height	Table I.
Table I–a Mounting height	Table I Mounting height	Table II.
Table I–a Mounting height	Table I Mounting height	Table III.
Table I–a Mounting height	Table I Mounting height	Table IV.
Table I–a Mounting height—Clearance lamps	Table I Mounting Height—Clearance lamps	S5.3.1.4 Rear clearance lamp mounting.
Table I–a Mounting height—Clearance lamps—rear.	64 FR 16358	64 FR 16358.
Table I–a Mounting height—Identification lamps—rear.	64 FR 16358	64 FR 16358.
Table I–a Mounting location	Table I Mounting location	Table I.
Table I–a Mounting location	Table I Mounting location	Table II.
Table I–a Mounting location	Table I Mounting location	Table III.
Table I–a Mounting location	Table I Mounting location	Table IV.
Table I–a Mounting location—High mounted stop lamp.	Table I Mounting location—High mounted stop lamp.	S5.3.1.8(a)(1).
Table I–a Mounting location—Clearance lamps	Table I Mounting location— Clearance lamps	S5.3.1.6 Truck tractor clearance lamps.
Table I–a Mounting location—Clearance lamps	Table I Mounting location— Clearance lamps	S5.3.2.1.
Table I–a Mounting location—Reflex reflectors	Table I Mounting location—Reflex reflectors	S5.3.1.2 Truck tractor rear reflex.
Table I–a Number and color	Table I Number and color	S5.1.1.1 Truck tractor exemption—TS.
Table I–a Number and color	Table I Number and color	S5.1.1.10 Multiple license plate lamps and backup lamps.
Table I–a Number and color	Table I Number and color	S5.1.1.2 Truck tractor exemption.
Table I–a Number and color	Table I Number and color	S5.5.11(a)(3).
Table I–a Number and color	Table I Number and color	Table I.
Table I–a Number and color	Table I Number and color	Table II.

APPENDIX B.—FMVSS NO. 108 REWRITE CROSS REFERENCE—Continued

Current FMVSS No. 108 or incorporated document citation	FMVSS No. 108 rewrite NPRM citation	FMVSS No. 108 rewrite final rule citation
Table I–a Number and color	Table I Number and color	Table III.
Table I–a Number and color	Table I Number and color	Table IV.
Table I–a Number and color—Intermediate side marker lamps.	Table I Number and color—Intermediate side marker lamps.	S5.1.1.3 Intermediate side marker exemption.
Table I–a Number and color—School bus signal lamps.	Table I Number and color—School bus signal lamps.	S5.1.4(a).
Table I–a Number and color—School bus signal lamps.	Table I Number and color—School bus signal lamps.	S5.1.4(b)(i).
Table I–b Activation Taillamps	Table I Activation Taillamps	S5.5.10(d).
Table I–b Activation—Clearance lamps	Table I Activation—Clearance lamps	S5.5.10(d).
Table I–b Activation—Side marker lamps	Table I Activation—Side marker lamps	S5.5.10(b).
Table I–b Activation—Side marker lamps	Table I Activation—Side marker lamps	S5.5.10(d).
Table I–b Activation—Stop lamps	Table I Activation—Stop lamps	Interpretation— Faber 5/26/00.
Table I–b Activation—Stop lamps	Table I Activation—Stop lamps	S5.1.1.11 Stop lamp and turn signal lamp activation interaction.
Table I–b Activation—Stop lamps	Table I Activation—Stop lamps	S5.5.10(d).
Table I–b Activation—Stop lamps	Table I Activation—Stop lamps	S5.5.4.
Table I–b Activation—Turn signals	Table I Activation—Turn signals	S5.5.10(a).
Table I–b Lighting device	Table I Lighting device	S5.1.1.4 Alternative side reflex material.
Table I–b Lighting device	Table I Lighting device	Table I.
Table I–b Lighting device	Table I Lighting device	Table II.
Table I–b Lighting device	Table I Lighting device	Table III.
Table I–b Lighting device	Table I Lighting device	Table IV.
Table I–b Mounting height	Table I Mounting height	Table I.
Table I–b Mounting height	Table I Mounting height	Table II.
Table I–b Mounting height	Table I Mounting height	Table III.
Table I–b Mounting height	Table I Mounting height	Table IV.
Table I–b Mounting Height—Clearance lamps	Table I Mounting Height—Clearance lamps	S5.3.1.4 Rear clearance lamp mounting.
Table I–b Mounting height—Clearance lamps—rear.	64 FR 16358	64 FR 16358.
Table I–b Mounting height—Identification lamps—rear.	64 FR 16358	64 FR 16358.
Table I–b Mounting location	Table I Mounting location	Table I.
Table I–b Mounting location	Table I Mounting location	Table II.
Table I–b Mounting location	Table I Mounting location	Table III.
Table I–b Mounting location	Table I Mounting location	Table IV.
Table I–b Mounting location—Clearance lamps	Table I Mounting location—Clearance lamps	S5.3.2.1.
Table I–b Mounting location—Reflex reflectors	Table I Mounting location—Reflex reflectors	S5.3.1.3 Trailer front reflex and side marker.
Table I–b Mounting location—Side marker lamps.	Table I Mounting location—Side marker lamps	S5.3.1.3 Trailer front reflex and side marker.
Table I–b Number and color	Table I Number and color	S5.1.1.10 Multiple license plate lamps and backup lamps.
Table I–b Number and color	Table I Number and color	S5.1.1.14 Trailer exemption—rear.
Table I–b Number and color	Table I Number and color	S5.1.1.15 Trailer exemption—front.
Table I–b Number and color	Table I Number and color	Table I.
Table I–b Number and color	Table I Number and color	Table II.
Table I–b Number and color	Table I Number and color	Table III.
Table I–b Number and color	Table I Number and color	Table IV.
Table I–b Number and color—Clearance lamp	Table I Number and color—Clearance lamp	S5.1.1.9 Boat trailer exemption.
Table I–b Number and color—Intermediate side marker lamps.	Table I Number and color—Intermediate side marker lamps.	S5.1.1.3 Intermediate side marker exemption.
Table I–b Reflex reflectors	S6.1.1.1.1 Conspicuity and reflex	S5.1.1.29 Conspicuity system replace reflex on trailers.
Table I–c Activation Taillamps	Table I Activation Taillamps	S5.5.10(d).
Table I–c Activation Taillamps	Table I Activation Taillamps	S5.5.3.
Table I–c Activation Taillamps	Table I Activation Taillamps	S5.5.7(a).
Table I–c Activation Taillamps	Table I Activation Taillamps	S5.5.7(b).
Table I–c Activation—Headlamp	Table I Activation—Headlamp	S5.5.9.
Table I–c Activation—Headlamp	Table I Activation—Headlamp	S5.5.10(d).
Table I–c Activation—License plate lamps	Table I Activation—License plate lamps	S5.5.10(d).
Table I–c Activation—License plate lamps	Table I Activation—License plate lamps	S5.5.7(a).
Table I–c Activation—License plate lamps	Table I Activation—License plate lamps	S5.5.7(b).
Table I–c Activation—Motorcycle headlamps	Table I Activation—Motorcycle headlamps	S5.5.10(b).
Table I–c Activation—Motorcycle headlamps	Table I Activation—Motorcycle headlamps	S5.5.10(c).
Table I–c Activation—Motorcycle headlamps	Table I Activation—Motorcycle headlamps	S5.5.9.
Table I–c Activation—Stop lamps	Table I Activation—Stop lamps	Interpretation—Faber 5/26/00.
Table I–c Activation—Stop lamps	Table I Activation—Stop lamps	S5.1.1.11 Stop lamp and turn signal lamp activation interaction.
Table I–c Activation—Stop lamps	Table I Activation—Stop lamps	S5.5.10(d).
Table I–c Activation—Stop lamps	Table I Activation—Stop lamps	S5.5.10(d).
Table I–c Activation—Stop lamps	Table I Activation—Stop lamps	S5.5.4.

APPENDIX B.—FMVSS NO. 108 REWRITE CROSS REFERENCE—Continued

Current FMVSS No. 108 or incorporated document citation	FMVSS No. 108 rewrite NPRM citation	FMVSS No. 108 rewrite final rule citation
Table I–c Activation—Turn signals	Table I Activation—Turn signals	S5.5.10(a).
Table I–c Lighting device	Table I Lighting device	S5.1.1.4 Alternative side reflex material.
Table I–c Lighting device	Table I Lighting device	Table III.
Table I–c Lighting device	Table I Lighting device	Table IV.
Table I–c Mounting height	Table I Mounting height	Table III.
Table I–c Mounting height	Table I Mounting height	Table IV.
Table I–c Mounting location	Table I Mounting location	Table III.
Table I–c Mounting location	Table I Mounting location	Table IV.
Table I–c Number and color	Table I Number and color	S5.1.1.10 Multiple license plate lamps and backup lamps.
Table I–c Number and color	Table I Number and color	S5.1.1.21 Motor driven cycle turn signal exemption.
Table I–c Number and color	Table I Number and color	Table III.
Table I–c Number and color	Table I Number and color	Table IV.
Table II–a Sealed beam headlamps Type A	Table II Sealed beam headlamps Type A	S7.3.2 Type A headlighting system.
Table II–a Sealed beam headlamps Type B	Table II Sealed beam headlamps Type B	S7.3.3 Type B headlighting system.
Table II–a Sealed beam headlamps Type C	Table II Sealed beam headlamps Type C	S7.3.4 Type C headlighting system.
Table II–a Sealed beam headlamps Type D	Table II Sealed beam headlamps Type D	S7.3.5 Type D headlighting system.
Table II–a Sealed beam headlamps Type E	Table II Sealed beam headlamps Type E	S7.3.6 Type E headlighting system.
Table II–a Sealed beam headlamps Type F	Table II Sealed beam headlamps Type F	S7.3.7 Type F headlighting system.
Table II–a Sealed beam headlamps Type G	Table II Sealed beam headlamps Type G	S7.3.8 Type G headlighting system.
Table II–a Sealed beam headlamps Type H	Table II Sealed beam headlamps Type H	S7.3.9 Type H headlighting system.
Table II–b Combination headlamps—2 lamp system.	Table II Combination headlamps—2 lamp system.	S7.6.2.
Table II–b Combination headlamps—4 lamp system.	Table II Combination headlamps—4 lamp system.	S7.6.3.
Table II–c Integral beam headlamps—2 lamp system.	Table II Integral beam headlamps—2 lamp system.	S7.4(a)(2).
Table II–c Integral beam headlamps—4 lamp system.	Table II Integral beam headlamps—4 lamp system.	S7.4(a)(1)(i).
Table II–c Integral beam headlamps—4 lamp system U & L.	Table II Integral beam headlamps—4 lamp system U & L.	S7.4(a)(1)(iii).
Table II–c Integral beam headlamps—4 lamp system—simultaneous activation.	Table II Integral beam headlamps—4 lamp system—simultaneous activation.	S7.4(a)(1)(ii).
Table II–c Integral beam headlamps—beam contributor system.	Table II Integral beam headlamps—beam contributor system.	S7.4(a)(3).
Table II–d Replaceable bulb headlamps—2 lamp system—with HB2.	Table II Replaceable bulb headlamps—2 lamp system—with HB2.	Figure 26.
Table II–d Replaceable bulb headlamps—2 lamp system—with HB2.	Table II Replaceable bulb headlamps—2 lamp system—with HB2.	S7.5(e).
Table II–d Replaceable bulb headlamps—2 lamp system—without HB2.	Table II Replaceable bulb headlamps—2 lamp system—without HB2.	Figure 26.
Table II–d Replaceable bulb headlamps—2 lamp system—without HB2.	Table II Replaceable bulb headlamps—2 lamp system—without HB2.	S7.5(d).
Table II–d Replaceable bulb headlamps—4 lamp system—with HB2.	Table II Replaceable bulb headlamps—4 lamp system—with HB2.	Figure 26.
Table II–d Replaceable bulb headlamps—4 lamp system—with HB2.	Table II Replaceable bulb headlamps—4 lamp system—with HB2.	S7.5(e).
Table II–d Replaceable bulb headlamps—4 lamp system—without HB2.	Table II Replaceable bulb headlamps—4 lamp system—without HB2.	Figure 26.
Table II–d Replaceable bulb headlamps—4 lamp system—without HB2.	Table II Replaceable bulb headlamps—4 lamp system—without HB2.	S7.5(d).
Table II footnote 1	Table II footnote 1	S5.5.8.
Table II footnote 2	Table II footnote 2	S7.4(d).
Table II footnote 3	Table II footnote 3	S5.5.8.
Table II footnote 4	Table II footnote 4	S5.5.8.
Table II footnote 5	Table II footnote 5	S5.5.8.
Table II footnote 6	Table II footnote 6	S7.4(a)(3).
Table II footnote 7	Omitted	S7.4(a)(3).
Table III Marking Requirements Locations [New Table—points to marking requirements].	New table	New table.
Table IV–a Front turn signal lamp—Effective projected luminous lens area.	Table IV Front turn signal lamp—Effective projected luminous lens area.	S5.1.1.25 Motor cycle turn signal lamp EPLLA.
Table IV–a Front turn signal lamp—Effective projected luminous lens area.	Table IV Front turn signal lamp—Effective projected luminous lens area.	SAE J1395, Apr 1985, 5.3.2.
Table IV–a Front turn signal lamp—Effective projected luminous lens area.	Table IV Front turn signal lamp—Effective projected luminous lens area.	SAE J588, Nov 1984, 5.3.2.
Table IV–a Rear turn signal lamp—Effective projected luminous lens area.	Table IV Rear turn signal lamp—Effective projected luminous lens area.	S5.1.1.25 Motor cycle turn signal lamp EPLLA.
Table IV–a Rear turn signal lamp—Effective projected luminous lens area.	Table IV Rear turn signal lamp—Effective projected luminous lens area.	S5.1.1.26(a).

APPENDIX B.—FMVSS NO. 108 REWRITE CROSS REFERENCE—Continued

Current FMVSS No. 108 or incorporated document citation	FMVSS No. 108 rewrite NPRM citation	FMVSS No. 108 rewrite final rule citation
Table IV–a Rear turn signal lamp—Effective projected luminous lens area.	Table IV Rear turn signal lamp—Effective projected luminous lens area.	S5.1.1.26(b).
Table IV–a Rear turn signal lamp—Effective projected luminous lens area.	Table IV Rear turn signal lamp—Effective projected luminous lens area.	SAE J1395, Apr 1985, 5.3.2.
Table IV–a Stop lamp—Effective projected luminous lens area.	Table IV Stop lamp–Effective projected luminous lens area.	S5.1.1.22 Motor driven cycle stop lamp exemptions.
Table IV–a Stop lamp—Effective projected luminous lens area.	Table IV Stop lamp—Effective projected luminous lens area.	S5.1.1.26(a).
Table IV–a Stop lamp—Effective projected luminous lens area.	Table IV Stop lamp—Effective projected luminous lens area.	S5.1.1.26(b).
Table IV–a Stop lamp—Effective projected luminous lens area.	Table IV Stop lamp—Effective projected luminous lens area.	SAE J1398, May 1985, 5.3.2.
Table IV–b High mounted stop lamp—Effective projected luminous lens area.	Table IV High mounted stop lamp—Effective projected luminous lens area.	S5.1.1.27(a)(1).
Table IV–b High mounted stop lamp—Effective projected luminous lens area.	Table IV High mounted stop lamp—Effective projected luminous lens area.	S5.1.1.27(b)(1).
Table IV–c School bus signal lamp—Effective projected luminous lens area.	Table IV School bus signal lamp—Effective projected luminous lens area.	SAE J887, Jul 1964.
Table IV footnote 1	Table IV footnote 1	S5.1.1.22 Motor driven cycle stop lamp exemptions.
Table V–a Backup lamp visibility	Table V Backup lamp visibility	S5.3.2(e).
Table V–a High mounted stop lamp visibility	Table V High mounted stop lamp visibility	S5.3.2(c).
Table V–a High mounted stop lamp visibility	Table V High mounted stop lamp visibility	S5.3.2(d).
Table V–a HMSL—Visibility	Table V HMSL—Visibility	S5.1.1.27(a)(2).
Table V–a HMSL—Visibility	Table V HMSL—Visibility	S5.1.1.27(b)(2).
Table V–a School bus signal lamp visibility	Table V School bus signal lamp visibility	SAE J887, Jul 1964.
Table V–b SAE stop lamp visibility	Table V SAE stop lamp visibility	SAE J1398, May 1985, 5.4.1.
Table V–b SAE stop lamp visibility	Table V SAE stop lamp visibility	SAE J586, Feb 1984, 5.4.1.
Table V–b SAE taillamp visibility	Table V SAE taillamp visibility	SAE J585e, Sep 1977, 4.
Table V–b SAE turn signal lamp visibility	Table V SAE turn signal lamp visibility	SAE J1395, Apr 1985, 5.4.1.
Table V–b SAE turn signal lamp visibility	Table V SAE turn signal lamp visibility	SAE J588, Nov 1984, 5.4.1.
Table V–c Lens area visibility	Table V Lens area visibility	Figure 19.
Table V–c Lens area visibility	Table V Lens area visibility	S5.3.2(b)(1).
Table V–d Luminous intensity visibility	Table V Luminous intensity visibility	Figure 20.
Table V–d Luminous intensity visibility	Table V Luminous intensity visibility	S5.3.2(b)(2).
Table V footnote 1	Table V footnote 1	New language.
Table V footnote 2	Table V footnote 2	S5.3.2.3.
Table V footnote 3	Table V footnote 3	Figure 19, footnote 2.
Table V footnote 4	Table V footnote 4	Figure 20, footnote 2.
Table VI–a Front turn signal lamp—Base group photometry.	Table VI Front turn signal lamp—Base zone photometry.	SAE J1395, Apr 1985, Table 1.
Table VI–a Front turn signal lamp—Base group photometry.	Table VI Front turn signal lamp—Base zone photometry.	SAE J588, Nov 1984, Table 1.
Table VI–a Front turn signal lamp—Base individual point photometry.	Table VI Front turn signal lamp—Base individual point photometry.	SAE J1395, Apr 1985, Table 3.
Table VI–a Front turn signal lamp—Base individual point photometry.	Table VI Front turn signal lamp—Base individual point photometry.	SAE J588, Nov 1984, Table 3.
Table VI–b Front turn signal lamp—1.5 × base group photometry.	Table VI Front turn signal lamp—1.5 × base zone photometry.	SAE J1395, Apr 1985, 5.1.5.4.
Table VI–b Front turn signal lamp—1.5 × base group photometry.	Table VI Front turn signal lamp—1.5 × base zone photometry.	SAE J1395, Apr 1985, Table 2.
Table VI–b Front turn signal lamp—1.5 × base group photometry.	Table VI Front turn signal lamp—1.5 × base zone photometry.	SAE J588, Nov 1984, 5.1.5.4.
Table VI–b Front turn signal lamp—1.5 × base group photometry.	Table VI Front turn signal lamp—1.5 × base zone photometry.	SAE J588, Nov 1984, Table 2.
Table VI–b Front turn signal lamp—1.5 × base individual point photometry.	Table VI Front turn signal lamp—1.5 × base individual point photometry.	SAE J1395, Apr 1985, 5.1.5.4.
Table VI–b Front turn signal lamp—1.5 × base individual point photometry.	Table VI Front turn signal lamp—1.5 × base individual point photometry.	SAE J1395, Apr 1985, Table 2.
Table VI–b Front turn signal lamp—1.5 × base individual point photometry.	Table VI Front turn signal lamp—1.5 × base individual point photometry.	SAE J588, Nov 1984, 5.1.5.4.
Table VI–b Front turn signal lamp—1.5 × base individual point photometry.	Table VI Front turn signal lamp—1.5 × base individual point photometry.	SAE J588, Nov 1984, Table 2.
Table VI–b Front turn signal lamp—2 × base group photometry.	Table VI Front turn signal lamp—2 × base zone photometry.	SAE J1395, Apr 1985, 5.1.5.4.
Table VI–b Front turn signal lamp—2 × base group photometry.	Table VI Front turn signal lamp—2 × base zone photometry.	SAE J1395, Apr 1985, Table 2.
Table VI–b Front turn signal lamp—2 × base group photometry.	Table VI Front turn signal lamp—2 × base zone photometry.	SAE J588, Nov 1984, 5.1.5.4.
Table VI–b Front turn signal lamp—2 × base group photometry.	Table VI Front turn signal lamp—2 × base zone photometry.	SAE J588, Nov 1984, Table 2.

APPENDIX B.—FMVSS NO. 108 REWRITE CROSS REFERENCE—Continued

Current FMVSS No. 108 or incorporated document citation	FMVSS No. 108 rewrite NPRM citation	FMVSS No. 108 rewrite final rule citation
Table VI–b Front turn signal lamp—2 × base individual point photometry.	Table VI Front turn signal lamp—2 × base individual point photometry.	SAE J1395, Apr 1985, 5.1.5.4.
Table VI–b Front turn signal lamp—2 × base individual point photometry.	Table VI Front turn signal lamp—2 × base individual point photometry.	SAE J1395, Apr 1985, Table 2.
Table VI–b Front turn signal lamp—2 × base individual point photometry.	Table VI Front turn signal lamp—2 × base individual point photometry.	SAE J588, Nov 1984, 5.1.5.4.
Table VI–b Front turn signal lamp—2 × base individual point photometry.	Table VI Front turn signal lamp—2 × base individual point photometry.	SAE J588, Nov 1984, Table 2.
Table VI–a Front turn signal lamp—2.5 × base group photometry.	Table VI Front turn signal lamp—2.5 × base zone photometry.	S5.3.1.7 Turn signal spacing.
Table VI–a Front turn signal lamp—2.5 × base group photometry.	Table VI Front turn signal lamp—2.5 × base zone photometry.	SAE J1395, Apr 1985, 5.1.5.4.
Table VI–a Front turn signal lamp—2.5 × base group photometry.	Table VI Front turn signal lamp—2.5 × base zone photometry.	SAE J1395, Apr 1985, Table 2.
Table VI–a Front turn signal lamp—2.5 × base group photometry.	Table VI Front turn signal lamp—2.5 × base zone photometry.	SAE J588, Nov 1984, 5.1.5.4.
Table VI–a Front turn signal lamp—2.5 × base group photometry.	Table VI Front turn signal lamp—2.5 × base zone photometry.	SAE J588, Nov 1984, Table 2.
Table VI–a Front turn signal lamp—2.5 × base individual point photometry.	Table VI Front turn signal lamp—2.5 × base individual point photometry.	S5.3.1.7 Turn signal spacing.
Table VI–a Front turn signal lamp—2.5 × base individual point photometry.	Table VI Front turn signal lamp—2.5 × base individual point photometry.	SAE J1395, Apr 1985, 5.1.5.4.
Table VI–a Front turn signal lamp—2.5 × base individual point photometry.	Table VI Front turn signal lamp—2.5 × base individual point photometry.	SAE J1395, Apr 1985, Table 2.
Table VI–a Front turn signal lamp—2.5 × base individual point photometry.	Table VI Front turn signal lamp—2.5 × base individual point photometry.	SAE J588, Nov 1984, 5.1.5.4.
Table VI–a Front turn signal lamp—2.5 × base individual point photometry.	Table VI Front turn signal lamp—2.5 × base individual point photometry.	SAE J588, Nov 1984, Table 2.
Table VI Front turn signal lamp—Photometric ratio.	Table VI Front turn signal lamp—Photometric ratio.	SAE J1395, Apr 1985, 5.1.5.2.
Table VI Front turn signal lamp—Photometric ratio.	Table VI Front turn signal lamp—Photometric ratio.	SAE J588, Nov 1984, 5.1.5.3.
Table VI footnote 1	Table VI footnote 1	SAE J588, Nov 1984, Table 1, footnote a; SAE J1395, Apr 1985, footnote a.
Table VI footnote 2	Table VI footnote 2	SAE J575e, Aug 1970, J.
Table VI footnote 3	Table VI footnote 3	S5.3.2.3.
Table VI footnote 4	Table VI footnote 4	SAE J1395, Apr 1985, 5.1.5.2.
Table VII Rear turn signal lamp—Red lamp individual point photometry.	Table VII Rear turn signal lamp—Red lamp individual point photometry.	SAE J1395, Apr 1985, Table 3.
Table VII Rear turn signal lamp—Red lamp individual point photometry.	Table VII Rear turn signal lamp—Red lamp individual point photometry.	SAE J588, Nov 1984, Table 3.
Table VII Rear turn signal lamp—Red lamp group photometry.	Table VII Rear turn signal lamp—Red lamp zone photometry.	SAE J1395, Apr 1985, Table 1.
Table VII Rear turn signal lamp—Red lamp group photometry.	Table VII Rear turn signal lamp—Red lamp zone photometry.	SAE J588, Nov 1984, Table 1.
Table VII Rear turn signal lamp—Amber lamp individual point photometry.	Table VII Rear turn signal lamp—Amber lamp individual point photometry.	SAE J1395, Apr 1985, Table 3.
Table VII Rear turn signal lamp—Amber lamp individual point photometry.	Table VII Rear turn signal lamp—Amber lamp individual point photometry.	SAE J588, Nov 1984, Table 3.
Table VII Rear turn signal lamp—Amber lamp group photometry.	Table VII Rear turn signal lamp—Amber lamp zone photometry.	SAE J1395, Apr 1985, Table 1.
Table VII Rear turn signal lamp—Amber lamp group photometry.	Table VII Rear turn signal lamp—Amber lamp zone photometry.	SAE J588, Nov 1984, Table 1.
Table VII Rear turn signal lamp—Photometric ratio.	Table VII Rear turn signal lamp—Photometric ratio.	SAE J1395, Apr 1985, 5.1.5.2.
Table VII Rear turn signal lamp—Photometric ratio.	Table VII Rear turn signal lamp—Photometric ratio.	SAE J588, Nov 1984, 5.1.5.3.
Table VII footnote 1	Table VII footnote 1	SAE J588, Nov 1984, Table 1, footnote a; SAE J1395, Apr 1985 footnote a.
Table VII footnote 2	Table VII footnote 2	SAE J575e, Aug 1970, J.
Table VII footnote 3	Table VII footnote 3	S5.3.2.3.
Table VII footnote 4	Table VII footnote 4	SAE J588, Nov 1984, Table 1, footnote b; SAE J1395, Apr 1985 footnote b.
Table VII footnote 5	Table VII footnote 5	SAE J588, Nov 1984, Table 1; SAE J1395, Apr 1985, Table 1.
Table VII footnote 6	Table VII footnote 6	S5.1.1.1; SAE J588e, Sep 1970, 3.9.1; SAE J1395, Apr 1985, 5.1.5.3.
Table VII footnote 7	Table VII footnote 7	SAE J1395, Apr 1985, 5.1.5.2.
Table VII footnote 8	Table VII footnote 8	SAE J588, Nov 1984, 5.1.5.3; SAE J1395, Apr 1985, 5.1.5.2.

APPENDIX B.—FMVSS NO. 108 REWRITE CROSS REFERENCE—Continued

Current FMVSS No. 108 or incorporated document citation	FMVSS No. 108 rewrite NPRM citation	FMVSS No. 108 rewrite final rule citation
Table VIII Taillamp—Individual point photometry.	Table VIII Taillamp—Individual point photometry.	Figure 1a.
Table VIII Taillamp—Individual point photometry.	Table VIII Taillamp—Individual point photometry.	Figure 1b.
Table VIII Taillamp—Individual point photometry.	Table VIII Taillamp—Individual point photometry.	Figure 1c.
Table VIII Taillamp—Group photometry	Table VIII Taillamp—Zone photometry	Figure 1a.
Table VIII Taillamp—Group photometry	Table VIII Taillamp—Zone photometry	Figure 1b.
Table VIII Taillamp—Group photometry	Table VIII Taillamp—Zone photometry	Figure 1c.
Table VIII Taillamp—Maximum photometric intensity.	Table VIII Taillamp—Maximum photometric intensity.	Figure 1b, footnote 1.
Table VIII footnote 1	Table VIII footnote 1	SAE J575e, Aug 1970, J.
Table VIII footnote 2	Table VIII footnote 2	S5.1.1.6.
Table VIII footnote 3	Table VIII footnote 3	S5.3.2.3.
Table VIII footnote 4	Omitted	SAE J585e, Sep 1977, Table 1, footnote 5.
Table IX Stop lamp—Individual point photometry.	Table IX Stop lamp—Individual point photometry.	SAE J1398, May 1985, Table 1.
Table IX Stop lamp—Individual point photometry.	Table IX Stop lamp—Individual point photometry.	SAE J586, Feb 1984, Table 1.
Table IX Stop lamp—Group photometry	Table IX Stop lamp—Zone photometry	SAE J1398, May 1985, Table 1.
Table IX Stop lamp—Group photometry	Table IX Stop lamp—Zone photometry	SAE J586, Feb 1984, Table 1.
Table IX Stop lamp—Photometric ratio	Table IX Stop lamp—Photometric ratio	SAE J1398, May 1985, 5.1.5.2.
Table IX Stop lamp—Photometric ratio	Table IX Stop lamp—Photometric ratio	SAE J586, Feb 1984, 5.1.5.3.
Table IX footnote 1	Table IX footnote 1	SAE J586, Feb 1984, Table 1, footnote a; SAE J1398, May 1985, footnote a.
Table IX footnote 2	Table IX footnote 2	SAE J575e, Aug 1970, J.
Table IX footnote 3	Table IX footnote 3	SAE J586, Feb 1984, Table 1, footnote b; SAE J1398, May 1985, footnote b.
Table IX footnote 4	Table IX footnote 4	S5.3.2.3.
Table IX footnote 5	Table IX footnote 7	SAE J586, Feb 1984, 5.1.5.3; SAE J1398, May 1985, 5.1.5.2.
Table IX footnote 6	Table IX footnote 6	SAE J586, Feb 1984, 5.1.5.3; SAE J1398, May 1985, 5.1.5.2.
Table X Red side marker lamp photometry	Table X Red side marker lamp photometry	SAE J592e, Jul 1972, Table 1.
Table X Amber side marker lamp photometry	Table X Amber side marker lamp photometry	SAE J592e, Jul 1972, Table 1.
Table X footnote 1	Table X footnote 1	S5.1.1.8; SAE J592e, Jul 1972, Table 1, footnote b.
Table X footnote 2	Table X footnote 2	SAE J575d, Aug 1967, J.
Table X footnote 3	Table X footnote 3	S5.3.2.3.
Table XI Red clearance and identification lamp photometry.	Table XI Red clearance and identification lamp photometry.	SAE J592e, Jul 1972, Table 1.
Table XI Amber clearance and identification lamp photometry.	Table XI Amber clearance and identification lamp photometry.	SAE J592e, Jul 1972, Table 1.
Table XI footnote 1	Table XI footnote 1	S5.3.2.3.
Table XI footnote 2	Table XI footnote 2	SAE J575d, Aug 1967, J.
Table XI footnote 3	Table XI footnote 3	SAE J592e, Jul 1972, Table 1, footnote a.
Table XI footnote 4	Table XI footnote 4	S5.3.2.1.
Table XII Single lamp system—Individual point photometry.	Table XII Single backup lamp system—Individual point photometry.	S5.1.1.18 Backup lamp photometry.
Table XII Single lamp system—Individual point photometry.	Table XII Single backup lamp system—Individual point photometry.	SAE J593c, Feb 1968, Table 1, footnote a.
Table XII Single lamp system—Group photometry.	Table XII Single backup lamp system—Zone photometry.	Figure 2, footnote 1.
Table XII Two lamp systems—Each lamp—Individual point photometry.	Table XII Two backup lamp system—Individual point photometry.	S5.1.1.18 Backup lamp photometry.
Table XII Two lamp systems—Each lamp—Individual point photometry.	Table XII Two backup lamp system—Individual point photometry.	SAE J593c, Feb 1968, Table 1, footnote b.
Table XII Two lamp system—Each lamp—Group photometry.	Table XII Two backup lamp system—Zone photometry.	Figure 2, footnote 1.
Table XII Backup lamp—Maximum photometric intensity any single lamp.	Table XII Backup lamp—Maximum photometric intensity.	SAE J593c, Feb 1968, Table 1, footnote c.
Table XII footnote 1	Table XII footnote 1	SAE J575d, Aug 1967, J.
Table XII footnote 2	Table XII footnote 2	Figure 2, footnote 1.
Table XII footnote 3	Table XII footnote 3	Figure 2, footnote 1.
Table XII footnote 4	Table XII footnote 4	S5.1.1.18 Backup lamp photometry.
Table XIII–a Motorcycle turn signal lamp—Individual point photometry.	S7.1.1.1; S7.1.2.1	S5.1.1.7 Motorcycle turn signal lamp.
Table XIII–a Motorcycle turn signal lamp—Group photometry.	S7.1.1.1; S7.1.2.1	S5.1.1.7 Motorcycle turn signal lamp.
Table XIII–a Motorcycle turn signal lamp—Photometric ratio.	S7.1.1.1; S7.1.2.1	S5.1.1.7 Motorcycle turn signal lamp.

APPENDIX B.—FMVSS NO. 108 REWRITE CROSS REFERENCE—Continued

Current FMVSS No. 108 or incorporated document citation	FMVSS No. 108 rewrite NPRM citation	FMVSS No. 108 rewrite final rule citation
Table XIII–b Motorcycle stop lamp—Photometric ratio.	Table IX Stop lamp—Photometric ratio	SAE J586, Feb 1984, 5.1.5.3.
Table XIII–b Motor driven cycle stop lamp—Group photometry.	Table IX Motor driven cycle stop lamp zone photometry.	S5.1.1.22 Motor driven cycle stop lamp exemptions.
Table XIII–a footnote 1	Standard note—new table	SAE J586, Feb 1984, Table 1, footnote a; SAE J588, Nov 1984, Table 1 footnote a.
Table XIII–a footnote 2	Standard note—new table	SAE J575e, Aug 1970, J.
Table XIII–a footnote 3, Table XIII footnote 1	Standard note—new table	SAE J586, Feb 1984, Table 1, footnote b.
Table XIII–a footnote 4, Table XIII–b footnote 2	Standard note—new table	S5.3.2.3.
Table XIII–b footnote 3	Table IX footnote 5	S5.1.1.22; Interpretation—Parkyn 6/1/98.
Table XIII–a footnote 5, Table XIII–b footnote 4	Table IX footnote 7	SAE J586, Feb 1984, 5.1.5.3.
Table XIV Parking lamp—Individual point photometry.	Table XIV Parking lamp—Individual point photometry.	Figures 1a, 1b, and 1c.
Table XIV Parking lamp—Group photometry	Table XIV Parking lamp—Zone photometry	Figures 1a, 1b, and 1c.
Table XIV Parking lamp—Maximum photometric intensity.	Table XIV Parking lamp—Maximum photometric intensity.	Figure 1b, footnote 2.
Table XIV footnote 1	Table XIV footnote 1	SAE J575d, Aug 1967, J.
Table XIV footnote 2	Table XIV footnote 2	S5.1.1.6.
Table XIV footnote 3	Table XIV footnote 3	S5.3.2.3.
Table XV High mounted stop lamp—Individual point photometry.	Table XV High mounted stop lamp—Individual point photometry.	Figure 10.
Table XV High mounted stop lamp—Group photometry.	Table XV High mounted stop lamp—Zone photometry.	Figure 10.
Table XV footnote 1	Table XV footnote 1	SAE J575e, Aug 1970, J.
Table XV footnote 2	Table XV footnote 2	Figure 10, footnote 2.
Table XV footnote 3	Table XV footnote 3	S5.1.1.27(b)(3).
Table XV footnote 4	Table XV footnote 4	Figure 10, footnote 1.
Table XVI–a Red reflex reflector photometry	Table XVI Red reflex reflector photometry	SAE J594f, Jan 1977, Tables 1 and 1A.
Table XVI–a Amber reflex reflector photometry	Table XVI Amber reflex reflector photometry	SAE J594f, Jan 1977, Table 1, footnote a.
Table XVI–a Amber reflex reflector photometry	Table XVI Amber reflex reflector photometry	SAE J594f, Jan 1977, Table 1A, footnote a.
Table XVI–a White reflex reflector photometry	Table XVI White reflex reflector photometry	SAE J594f, Jan 1977, Table 1, footnote a.
Table XVI–a White reflex reflector photometry	Table XVI White reflex reflector photometry	SAE J594f, Jan 1977, Table 1A, footnote a
Table XVI–a footnote 1	Table XVI footnote 1	S5.3.2.3.
Table XVI–b Red conspicuity reflex reflector photometry.	Table XVI Red conspicuity reflex reflector photometry.	S5.7.2.1(b).
Table XVI–b White horizontal conspicuity reflex reflector photometry.	Table XVI White horizontal conspicuity reflex reflector photometry.	S5.7.2.1(c).
Table XVI–b White vertical conspicuity reflex reflector photometry.	Table XVI White vertical conspicuity reflex reflector photometry.	S5.7.2.1(d).
Table XVI–c Red C2 sheeting photometry	Table XVI Red C2 sheeting photometry	S5.7.1.2; Figure 29.
Table XVI–c Red C3 sheeting photometry	Table XVI Red C3 sheeting photometry	S5.7.1.2; Figure 29.
Table XVI–c Red C4 sheeting photometry	Table XVI Red C4 sheeting photometry	S5.7.1.2; Figure 29.
Table XVI–c White C2 sheeting photometry	Table XVI White C2 sheeting photometry	S5.7.1.2; Figure 29.
Table XVI–c White C3 sheeting photometry	Table XVI White C3 sheeting photometry	S5.7.1.2; Figure 29.
Table XVI–c White C4 sheeting photometry	Table XVI White C4 sheeting photometry	S5.7.1.2; Figure 29.
Table XVII School bus signal lamp photometry	Table XVII School bus signal lamp photometry	SAE J887, Jul 1964, Table 1.
Table XVII Red lamp photometry	Table XVII Red lamp photometry	SAE J575d, Aug 1967, J.
Table XVII Amber lamp photometry	Table XVII Amber lamp photometry	S5.1.4(b).
Table XVII footnote 1	Table XVII footnote 1	S5.3.2.3.
Table XVII footnote 2	Table XVII footnote 2	SAE J575d, Aug 1967, J.
Table XVIII Upper beam #1 photometry	Table XVIII Upper beam #1 photometry	Figure 15–1.
Table XVIII Upper beam #1 photometry	Table XVIII Upper beam #1 photometry	Figure 15–2.
Table XVIII Upper beam #2 photometry	Table XVIII Upper beam #2 photometry	Figure 17–1.
Table XVIII Upper beam #2 photometry	Table XVIII Upper beam #2 photometry	Figure 17–2.
Table XVIII Upper beam #3 photometry	Table XVIII Upper beam #3 photometry	Figure 27–1.
Table XVIII Upper beam #3 photometry	Table XVIII Upper beam #3 photometry	Figure 27–2.
Table XVIII Upper beam #4 photometry	Table XVIII Upper beam #4 photometry	Figure 28–1, Types 1A1, 1C1, and 1G1.
Table XVIII Upper beam #4 photometry	Table XVIII Upper beam #4 photometry	Figure 28–2, Types 1A1, 1C1, and 1G1.
Table XVIII Upper beam #5 photometry	Table XVIII Upper beam #5 photometry	Figure 28–1, Types 2A1, 2C1, and 2G1.
Table XVIII Upper beam #5 photometry	Table XVIII Upper beam #5 photometry	Figure 28–2, Types 2A1, 2C1, and 2G1.
Table XVIII Upper beam #6 photometry	Table XVIII Upper beam #6 photometry	Figure 15–1.
Table XVIII Upper beam #6 photometry	Table XVIII Upper beam #6 photometry	Figure 15–2.
Table XVIII Upper beam #6 photometry	Table XVIII Upper beam #6 photometry	S7.4(a)(1)(ii).
Table XIX–a Lower beam #1M photometry	Table XIX Lower beam #1M photometry	Figure 15–1.
Table XIX–a Lower beam #1V photometry	Table XIX Lower beam #1V photometry	Figure 15–2.
Table XIX–a Lower beam #2M photometry	Table XIX Lower beam #2M photometry	Figure 17–1.
Table XIX–a Lower beam #2V photometry	Table XIX Lower beam #2V photometry	Figure 17–2.
Table XIX–a Lower beam #2V photometry	Table XIX Lower beam #2V photometry	Figure 28–2, Types 2A1, 2C1 and 2G1.
Table XIX–b Lower beam #3M photometry	Table XIX Lower beam #3M photometry	Figure 27–1.
Table XIX–b Lower beam #3V photometry	Table XIX Lower beam #3V photometry	Figure 27–2.
Table XIX–b Lower beam #4M photometry	Table XIX Lower beam #4M photometry	Figure 28–2, Types 2A1, 2C1, and 2G1.

APPENDIX B.—FMVSS NO. 108 REWRITE CROSS REFERENCE—Continued

Current FMVSS No. 108 or incorporated document citation	FMVSS No. 108 rewrite NPRM citation	FMVSS No. 108 rewrite final rule citation
Table XIX–c Lower beam #4V photometry	Table XIX Lower beam #4V photometry	Figure 15–2.
Table XIX–c Lower beam #4V photometry	Table XIX Lower beam #4V photometry	S7.4(a)(1)(ii).
Table XIX–b Lower beam #5M photometry	Table XIX Lower beam #5M photometry	Figure 15–1.
Table XIX–b Lower beam #5M photometry	Table XIX Lower beam #5M photometry	S7.4(a)(1)(ii).
Table XIX 10° U–90° U Test area	Table XIX 10° U–90° U Test area	Interpretation—Spingler 7/2/99.
Table XX Motorcycle photometry	Table XX Motorcycle photometry	Figure 32.
Table XX Motor driven cycle photometry	Table XX Motor driven cycle photometry	Figure 32.
Table XX Motor driven cycle with single lamp photometry.	Table XX Motor driven cycle with single lamp photometry.	Figure 32.
Redundant—eliminated	S8.1.1 Headlighting system type	S7.3.
Redundant—eliminated	S8.1.1 Headlighting system type	S7.4.
Redundant—eliminated	S8.1.1 Headlighting system type	S7.5.
Redundant—eliminated	S8.1.1 Headlighting system type	S7.6.
Redundant—eliminated	S8.1.2 Headlamp category	S7.3.
Redundant—eliminated	S8.1.2 Headlamp category	S7.4.
Redundant—eliminated	S8.1.2 Headlamp category	S7.5.
Redundant—eliminated	S8.1.2 Headlamp category	S7.6.
Relocated to Part 564, Appendix C	Relocated to Part 564, Appendix C	Figure 11.
Relocated to Part 564, Appendix C	Relocated to Part 564, Appendix C	Figure 12.
Relocated to Part 564, Appendix C	Relocated to Part 564, Appendix C	Figure 13.
Relocated to Part 564, Appendix C	Relocated to Part 564, Appendix C	Figure 14.
Relocated to Part 564, Appendix C	Relocated to Part 564, Appendix C	Figure 18.
Relocated to Part 564, Appendix C	Relocated to Part 564, Appendix C	Figure 21.
Relocated to Part 564, Appendix C	Relocated to Part 564, Appendix C	SAE J1383, Apr 1985, 5.3.
Relocated to Part 564, Appendix C	Relocated to Part 564, Appendix C	SAE J1383, Apr 1985, Figure 10.
Relocated to Part 564, Appendix C	Relocated to Part 564, Appendix C	SAE J1383, Apr 1985, Figure 11.
Relocated to Part 564, Appendix C	Relocated to Part 564, Appendix C	SAE J1383, Apr 1985, Figure 11.
Relocated to Part 564, Appendix C	Relocated to Part 564, Appendix C	SAE J1383, Apr 1985, Figure 12.
Relocated to Part 564, Appendix C	Relocated to Part 564, Appendix C	SAE J1383, Apr 1985, Figure 13.
Relocated to Part 564, Appendix C	Relocated to Part 564, Appendix C	SAE J1383, Apr 1985, Figure 14.
Relocated to Part 564, Appendix C	Relocated to Part 564, Appendix C	SAE J1383, Apr 1985, Figure 15.
Relocated to Part 564, Appendix C	Relocated to Part 564, Appendix C	SAE J1383, Apr 1985, Figure 5.
Relocated to Part 564, Appendix C	Relocated to Part 564, Appendix C	SAE J1383, Apr 1985, Figure 6.
Relocated to Part 564, Appendix C	Relocated to Part 564, Appendix C	SAE J1383, Apr 1985, Figure 7.
Relocated to Part 564, Appendix C	Relocated to Part 564, Appendix C	SAE J1383, Apr 1985, Figure 8.
Relocated to Part 564, Appendix C	Relocated to Part 564, Appendix C	SAE J1383, Apr 1985, Figure 9.

APPENDIX C.—LIST OF FIGURES

[Current FMVSS No. 108 is 49 CFR 571.108, Oct. 1, 2006]

Figure No.	Title
1	CHROMATICITY DIAGRAM [SAE J578c, FEB 1977, FIGURE 1].
2	FLASHER PERFORMANCE CHART [SAE J590b, OCT 1965, FIGURE 1].
3	REPLACEABLE BULB HEADLAMP AIM PADS [CURRRENT FMVSS 108 FIG. 4–1 TO 4–4].
4	HEADLAMP CONNECTOR TEST SETUP [SAE J580, DEC 1986, FIGURE 1].
5	HEADLAMP ABRASION TEST FIXTURE [CURRENT FMVSS 108 FIGURE 5].
6	THERMAL CYCLE TEST PROFILE [CURRENT FMVSS 108 FIGURE 6].
7	DIRT/AMBIENT TEST SETUP [CURRENT FMVSS108 FIGURE 7].
8	REPLACEABLE LIGHT SOURCE DEFLECTION TEST SETUP [CURRENT FMVSS 108 FIGURE 8].
9	ENVIROMENTAL TEST PROFILE [CURRENT FMVSS108 FIGURE 9].
10	REPLACEABLE LIGHT SOURCE PRESSURE TEST SETUP [CURRENT FMVSS108 FIGURE 25].
11	TRAILER CONSPICUITY TREATMENT EXAMPLES [CURRENT FMVSS108 FIGURES 30–1 TO 30–4].
12–1	TRAILER CONSPICUITY DETAIL I [NEW].
12–2	TRAILER CONSPICUITY DETAIL II [NEW].
13	TRACTOR CONSPICUITY TREATMENT EXAMPLES [CURRENT FMVSS108 FIGURE 31].
14	92 x 150 HEADLAMP AIM DEFLECTION TEST SETUP [CURRENT FMVSS108 FIGURE 16].
15	TYPES G AND H HEADLAMP AIM DEFLECTION TEST SETUP [CURRENT FMVSS108 FIGURE 22].
16	TYPES A AND E HEADLAMP AIM DEFLECTION TEST SETUP [SAE J580, DEC 1986, FIGURE 3].
17	TYPE B HEADLAMP AIM DEFLECTION TEST SETUP [SAE J580, DEC 1986, FIGURE 4].
18	TYPES C AND D HEADLAMP AIM DEFLECTION TEST SETUP [SAE J580, DEC 1986, FIGURE 2].
19	LICENSE PLATE LAMP TARGET LOCATIONS [SAE J587, OCT 1981, FIGURES 1 & 2].
20	LICENSE PLATE LAMP MEASUREMENT OF INCIDENT LIGHT ANGLE [SAE J587, OCT 1981, FIGURE 3].
21	VIBRATION TEST MACHINE [SAE J577, APRIL 1964, FIGURE 1 & TABLE 1].
22	FLASHER STANDARD TEST CIRCUIT [SAE J823b, APRIL 1968, FIGURE 1].

APPENDIX C.—LIST OF FIGURES—Continued

[Current FMVSS No. 108 is 49 CFR 571.108, Oct. 1, 2006]

Figure No.	Title
	FIGURES TO INCORPORATE IN 49 CFR 564 APPENDIX C
	LF HEADLAMP DIMENSIONAL INFORMATION [CURRENT FMVSS108 FIGURE 11] [INCLUDES TYPE F NONADJUSTABLE HEADLAMP AIMING DEVICE LOCATING PLATE INFORMATION].
	UF HEADLAMP DIMENSIONAL INFORMATION [CURRENT FMVSS108 FIGURE 12].
	LF/UF MOUNTING FEATURES [CURRENT FMVSS108 FIGURE 13].
	LF/UF MOUNTING RING [CURRENT FMVSS108 FIGURE 14].
	TYPE G & H HEADLAMP DIMENSIONAL INFORMATION [CURRENT FMVSS 108 FIGURE 18].
	TYPE G & H HEADLAMP MOUNTING INFORMATION [CURRENT FMVSS108 FIGURE 21].
	TYPE 1A1 HEADLAMP DIMENSIONAL INFORMATION [SAE J1383, APR 1985, FIGURE 11].
	TYPE 2A1 HEADLAMP DIMENSIONAL INFORMATION [SAE J1383, APR 1985, FIGURE 10] [INCLUDES 100 mm X 165 mm NONADJUSTABLE HEADLAMP AIMING DEVICE LOCATING PLATE INFORMATION].
	TYPE 2B1 HEADLAMP DIMENSIONAL INFORMATION [SAE J1383, APR 1985, FIGURE 13] [INCLUDES 142 mm X 200 mm NONADJUSTABLE HEADLAMP AIMING DEVICE LOCATING PLATE INFORMATION].
	TYPE 1C1 HEADLAMP DIMENSIONAL INFORMATION [SAE J1383, APR 1985, FIGURE 7] [INCLUDES 178 mm DIA. NONADJUSTABLE HEADLAMP AIMING DEVICE LOCATING PLATE INFORMATION].
	TYPE 2C1 HEADLAMP DIMENSIONAL INFORMATION [SAE J1383, APR 1985, FIGURE 8].
	TYPE 2D1 HEADLAMP DIMENSIONAL INFORMATION [SAE J1383, APR 1985, FIGURE 5] [INCLUDES 146 mm DIA. NONADJUSTABLE HEADLAMP AIMING DEVICE LOCATING PLATE INFORMATION].
	TYPE 2E1 HEADLAMP DIMENSIONAL INFORMATION [SAE J1383, APR 1985, FIGURE 15].
	TYPES 1A1, 2A1, AND 2E1 HEADLAMP MOUNTING RING/LAMP BODY DIMENSIONAL INFORMATION [SAE J1383, APR 1985, FIGURE 12].
	TYPE 2B1 HEADLAMP MOUNTING RING/LAMP BODY DIMENSIONAL INFORMATION [SAE J1383, APR 1985, FIGURE 14].
	TYPES 1C1 AND 2C1 HEADLAMP MOUNTING RING/LAMP BODY DIMENSIONAL INFORMATION [SAE J1383, APR 1985, FIGURE 9].
	TYPE 2D1 HEADLAMP MOUNTING RING/LAMP BODY DIMENSIONAL INFORMATION [SAE J1383, APR 1985, FIGURE 6].

[FR Doc. 07–5644 Filed 12–3–07; 8:45 am]

BILLING CODE 4910–59–P

Federal Register

Tuesday,
December 4, 2007

Part III

Department of Transportation

National Highway Traffic Safety Administration

49 CFR Part 571

Federal Motor Vehicle Safety Standards; Cargo Carrying Capacity; Final Rule

DEPARTMENT OF TRANSPORTATION

National Highway Traffic Safety Administration

49 CFR Part 571

[DOT Docket No. NHTSA–2007–0040]

RIN 2127–AJ57

Federal Motor Vehicle Safety Standards; Cargo Carrying Capacity

AGENCY: National Highway Traffic Safety Administration (NHTSA), DOT.

ACTION: Final rule.

SUMMARY: In this final rule, we (NHTSA) address the problem of motor home and recreation vehicle trailer overloading by amending the Federal Motor Vehicle Safety Standards (FMVSS) on tire selection and rims.

This final rule requires manufacturers of all motor homes and recreation vehicle trailers to provide information to consumers in a label that informs the consumer about the vehicle's load carrying capacity. This information is helpful both at the time the consumer is making a purchase decision and as the consumer uses his or her vehicle. We also require that the size of tires on motor homes and recreation vehicle trailers be the same as the size of the tires listed on the tire information label.

In addition, this rule provides regulatory relief for dealers from a labeling requirement in the safety standard on tire selection and rims for light vehicles. The standard's requirement can currently require dealers which add even small amounts of weight to re-label the vehicles. Under today's amendment, any party that adds weight to a completed vehicle exceeding the lesser of 1.5 percent of the vehicle's gross vehicle weight rating or 100 pounds (before first sale to the retail customer) is required to disclose this extra weight on labels affixed to the vehicles. Lesser amounts of weight may be added without changing or adding labels.

It is our belief that this rule complements the efforts of the recreation vehicle industry to provide consumers with information in order to help reduce overloading motor homes and recreation vehicle trailers. This rulemaking was initiated in response to a petition from Ms. Justine May.

DATES: *Effective date:* The effective date for this final rule is June 2, 2008. Optional immediate compliance is available as of December 4, 2007.

Petitions for reconsideration: Petitions for reconsideration of the final rule must be received not later than January 18, 2008.

ADDRESSES: Petitions for reconsideration of the final rule must refer to the docket and notice number set forth above and be submitted to the Administrator, National Highway Traffic Safety Administration, 1200 New Jersey Avenue, SE., Washington, DC 20590.

FOR FURTHER INFORMATION CONTACT: For non-legal issues, you may call Mr. William D. Evans, Office of Crash Avoidance Standards at (202) 366–2272. His FAX number is (202) 366–2990.

For legal issues, you may call Ms. Dorothy Nakama, Office of the Chief Counsel at (202) 366–2992. Her FAX number is (202) 366–3820.

You may send mail to both of these officials at National Highway Traffic Safety Administration, 1200 New Jersey Avenue, SE., Washington, DC 20590.

SUPPLEMENTARY INFORMATION:

Table of Contents

I. Background
A. The May Petition
B. Joint Industry Petition for Rulemaking and Interim Relief Concerning Standard No. 110 Issues
II. Notice of Proposed Rulemaking of August 31, 2005
III. Overview
A. Summary of Comments
B. Summary of the Final Rule
C. Summary of Significant Differences Between the NPRM and the Final Rule
IV. Public Comments and NHTSA's Response
A. Applicability of This Final Rule
1. Whether the Final Rule Should Apply to All RVs, Not Just to RVs with Gross Vehicle Weight Ratings Greater than 4,536 Kilograms (10,000 Pounds)
2. Excluding Light RVs from FMVSS No. 110 Labeling Requirements
B. Definitions
1. NPRM
2. The Definition of ''Travel Trailer'' and ''Motor Home''
3. NPRM's Term ''Tongue Load Rating'' for RV Trailers
C. GVWR, GAWR and Tire Load Information for Motor Homes and Recreation Vehicle Trailers
1. NPRM
2. Requirement that Heavy RVs be Delivered to the Customer With the Same Size Tires That are Listed on the Vehicle Certification Label or Tire Information Label
3. Whether the ''Make Inoperative'' Prohibition Applies to the FMVSS No. 110 Vehicle Placard and Optional Tire Inflation Pressure Label
D. Determining Occupant Capacity Weight
1. NPRM
2. RV Occupant Capacity Weight (OCW) and the Weight of a Standard Occupant
E. Location of Labels
1. NPRM
2. Revised RV Load Carrying Capacity Labels
3. Label Locations for Heavy RVs and All Light Vehicles
4. Location of the FMVSS No. 110 Load Carrying Capacity Modification Label
F. Label Format and Content
1. NPRM
2. Revised RV Load Carrying Capacity Labels
G. Addition of Weight to FMVSS No. 110 Vehicles and FMVSS No. 120 Motor Homes and Travel Trailers Between Vehicle Certification and First Retail Sale of the Vehicle
1. Proposal Concerning FMVSS No. 110
2. Proposal Concerning FMVSS No. 120
3. Comments and Decision Concerning Weight Added to Heavy RVs and All Light Vehicles After Final Vehicle Certification and Before First Retail Sale
H. Other Issues
1. Whether the Final Rule Should Protect Against Overloading Tires, Wheels, Axles and Suspensions on RVs
2. RV Weight and Weighing Issues
3. Numbering in Proposed FMVSS No. 110 Regulatory Text
4. Scope of Notice for Joint Petition Issues
5. Response to Issues of the Joint Petition
6. The Meaning of ''Stated Weight Ratings'' on FMVSS No. 110 Placards
7. Issues Outside the Scope of this Rulemaking
V. Final Rule
VI. Leadtime
VII. Regulatory Analyses and Notices
A. Executive Order 12866 and DOT Regulatory Policies and Procedures
B. Executive Order 13132 (Federalism)
C. Executive Order 13045 (Economically Significant Rules Affecting Children)
D. Executive Order 12988 (Civil Justice Reform)
E. Regulatory Flexibility Act
F. National Environmental Policy Act
G. Paperwork Reduction Act
H. National Technology Transfer and Advancement Act
I. Unfunded Mandates Reform Act of 1995
J. Plain Language
K. Regulation Identifier Number (RIN)
Final Rule Regulatory Text

I. Background

A. The May Petition

In a petition dated January 21, 2000, Ms. Justine May petitioned NHTSA to amend Federal Motor Vehicle Safety Standard (FMVSS) Number 120, *Tire selection and rims for motor vehicles other than passenger cars*. Ms. May requested that FMVSS No. 120 be revised in such a way that motor vehicles would be equipped with tires that meet maximum load standards when the vehicle is loaded with a reasonable amount of luggage and the total number of passengers the vehicle is designed to carry. Ms. May's stated reason for her petition was her family's personal experience with a fifth-wheel travel trailer. She stated that there was no information provided with her trailer stating its cargo carrying capacity (CCC). Ms. May believes that loading her vehicle with cargo for a trip placed it in an overloaded condition, resulting in

tire blowouts. The agency granted Ms. May's petition for rulemaking.

B. Joint Industry Petition for Rulemaking and Interim Relief Concerning Standard No. 110 Issues

Prior to publication of an NPRM addressing the May petition, NHTSA received a Joint Petition for Rulemaking and Interim Relief concerning certain FMVSS No. 110 provisions that were scheduled to take effect on September 1, 2005 regarding vehicle capacity weight and tire information. The Joint Petition [1] requested a notice of interim final rulemaking authorizing or clarifying that the vehicle capacity weight statement required by FMVSS No. 110 allows for a reasonable tolerance, that vehicle capacity weight be labeled as ''estimated'' and as ''originally manufactured,'' that placards/labels may be modified rather than replaced and that shipping weight or weight determined by scales of reasonable accuracy may be used to determine the additional weight of equipment added to vehicles.

II. Notice of Proposed Rulemaking of August 31, 2005

On August 31, 2005, NHTSA published in the **Federal Register** (70 FR 51707) (DMS Docket No. NHTSA–2005–22242), the NPRM to address the problem of motor home and travel trailer overloading. The agency explained in some detail the safety need for the proposed rule, which would help to prevent motor home and travel trailer overloading.[2] NHTSA cited data from the Recreation Vehicle Industry Association (RVIA) regarding the number of recreation vehicles and from the Recreation Vehicle Safety Education Foundation (RVSEF) showing the scope of the overloading problem. The agency described characteristics of motor homes and travel trailers, explaining how they may become overloaded, and cited cargo carrying capacity-related consumer information and labels that are currently required by NHTSA. Finally, NHTSA described cargo carrying capacity consumer information and labels currently required or recommended by Transport Canada and the RVIA.

In the NPRM, we also included several provisions to address the Joint Petition concerning FMVSS No. 110. Included was a proposal to permit dealers to add weight up to 0.5 percent of the GVWR (of a vehicle subject to FMVSS No. 110) before first retail sale, without need for the dealers to re-label or re-placard the vehicle.

III. Overview

A. Summary of Comments

In response to the NPRM, NHTSA received comments from the following: Adaptive Driving Alliance (ADA); Alliance of Automobile Manufacturers (Alliance); Association of International Automobile Manufacturers (AIAM); Marine Retailers Association of America (MRAA); National Association of Trailer Manufacturers (NATM); National Automobile Dealers Association (NADA); National Marine Manufacturers Association (NMMA); National Mobility Equipment Dealers Association (NMEDA); National RV Dealers Association (RVDA); National Trailer Dealers Association (NTDA); National Truck Equipment Association (NTEA); Recreation Vehicle Industry Association (RVIA); Rubber Manufacturers Association (RMA); Mr. Nate J. Seymour (Seymour); Specialty Equipment Market Association (SEMA); Toyota Motor North America, Inc. (Toyota); Mr. James Weston (Weston); and Mr. Tim Walker (Walker).

Many of the commenters addressed the applicability of the proposed rule, and recommended that the final rule should apply to all motor homes and travel trailers, not just those with GVWRs over 4,536 kg (10,000 pounds). We were also asked to simplify the definition of ''occupant capacity weight.'' Some commenters, notably the RVIA, asked NHTSA to specify multiple locations (three) for the labeling information. There were recommendations for more detailed information on cargo carrying capacity, including definitions of GVWR, unloaded vehicle weight, and cargo carrying capacity, and a request for NHTSA to provide more guidance on the effects of dealer installed equipment on cargo carrying capacity and the distribution of cargo.

Reiterating issues raised in previous rulemakings, and interpretation letters, some commenters asked for revisions in FMVSS No. 110 vehicle (tire) placarding [3] requirements. Relief was also supported for instances when weight is added to a vehicle after final vehicle certification and before first retail sale. Many commenters stated that the relief proposed in the NPRM, 0.5 percent of vehicle GVWR, was too low.

B. Summary of the Final Rule

After considering the public comments, and for the reasons discussed in detail later in this document, we have decided to require all motor homes and recreation vehicle (RV) trailers to bear a label that informs the consumer about the vehicle's load carrying capacity. The final rule defines the term ''recreation vehicle trailer'' rather than using the term proposed in the NPRM, ''travel trailer.'' We also require that the size of tires on motor homes and RV trailers be the same as the size of tires listed on the tire information label.

For motor homes and RV trailers, we require labels that display the VIN, the weight of a full load of water, the unit weight of water and a cautionary statement that the weight of water is part of cargo. Motor home labels must display the maximum weight of occupants and cargo and RV trailer labels must display the maximum weight of cargo. In addition, for motor homes, the label must show the safety belt equipped seating capacity and must indicate that the tongue weight of a towed trailer counts as cargo.

To promote a consistent conspicuous label location, this final rule specifies that permanent load carrying capacity labels be affixed to the interior of the forward-most exterior passenger door on the right side of the vehicle and be visible. As an alternative (to address aesthetic considerations) the rule permits manufacturers to place a temporary label to the interior of the forward-most exterior passenger door on the right side of the vehicle and apply a permanent label in the area of the vehicle specified by FMVSS Nos. 110 and 120 for tire information.

In addition, this final rule adopts a threshold for correcting load carrying capacity information on tire placards, motor home occupant and cargo carrying capacity (OCCC) labels and RV trailer CCC labels of the lesser of 1.5 percent of GVWR or 100 pounds, greatly decreasing the need to correct the information. When correction of load carrying capacity is needed, this rule permits the use of generic labels where corrected values can be legibly entered using a black, fine point, indelible marker. This permits dealers to stock one generic load carrying capacity modification label.

[1] ''Joint Petition'' means the ''Joint Petition for Rulemaking and Interim Relief; Federal Motor Vehicle Safety Standard (FMVSS) No. 110; Vehicle Capacity Weight and Tire Information'' dated July 29, 2005 which was submitted to NHTSA by a group of trade organizations through Mike Kastner (NTEA) and Douglas Greenhaus (NADA). The document is available in docket NHTSA–2005–22242–3.

[2] For a full explanation of the safety need for the rulemaking, and data cited in support, please refer to the NPRM of August 31, 2005 at 70 FR 51707.

[3] For purposes of this document, ''tire placard'' means the vehicle placard required by S4.3 of FMVSS No. 110.

In this final rule, the addition of the load carrying capacity modification label is one of three options that can be used to correct load carrying capacity information when dealer added weight exceeds the threshold. Dealers/service facilities are permitted to: (1) Replace existing tire placards, motor home OCCC labels or RV trailer CCC labels with new placards/labels containing correct load carrying capacity information; (2) modify existing tire placards, motor home OCCC labels or RV trailer CCC labels so they display correct load carrying capacity information; or (3) add a load carrying capacity modification label within 25 mm of the existing tire placard and/or the motor home OCCC label or RV trailer CCC label.

C. Summary of Significant Differences Between the NPRM and the Final Rule

This final rule differs from the August 2005 NPRM in the following significant ways. In the NPRM, NHTSA proposed that the rule apply to motor homes and travel trailers with GVWRs greater than 4,536 kg (10,000 pounds). This final rule applies to all motor homes and recreation vehicle trailers, regardless of GVWR. In the NPRM, NHTSA proposed that in determining cargo carrying capacity, that the occupant capacity weight be determined. In this final rule, we adopt labels that display the maximum weight allotted for both occupants and cargo. In the NPRM, NHTSA proposed one location for the permanent label—affixed to the interior of the forward-most exterior passenger door on the right side of the vehicle. This location has been adopted in the final rule. In addition, the final rule permits manufacturers the option of placing a temporary label in the specified location and applying an identical permanent label in the area of the vehicle specified by FMVSS Nos. 110 and 120 for tire information.

In the NPRM, NHTSA proposed for both FMVSS No. 110 and 120 vehicles, that if weight greater than 0.5 percent of GVWR is added by the dealer before first retail sale, the dealer would be required to correct the stated load carrying capacity information. In the final rule, the weight has been adjusted to the lesser of 1.5 percent of GVWR or 100 pounds.

Finally, in the NPRM, NHTSA proposed labels with detailed information on how the cargo carrying capacity is calculated. In this final rule, we adopt labels that have been simplified.

IV. Public Comments and NHTSA's Response

A. Applicability of This Final Rule

1. Whether the Final Rule Should Apply to All RVs, Not Just to RVs with GVWRs Greater Than 4,536 kg (10,000 pounds)—In the NPRM, NHTSA proposed that the new labeling rule apply to motor homes and travel trailers over 4,536 kg (10,000 pounds). Seymour, the RVDA and the RVIA all commented that the proposed RV labeling requirements should not be limited to motor homes and travel trailers with GVWRs over 4,536 kg (10,000 pounds) but should apply to all RVs.

RVDA commented that the proposed CCC labels for heavy RVs [4] provide useful information for both consumers and dealers. It argued that consumers who purchase light RVs should also have the benefit of the same detailed information. RVDA also indicated that if the proposed regulatory text was made final, there would be three different labels for RVs: (1) Heavy RVs would have the FMVSS No. 120 CCC label which would most likely replace the RVIA label; (2) Light RVs would have the FMVSS No. 110 tire placard with load carrying capacity information; and (3) Most light RVs may also have a more detailed RVIA label. According to that organization, these different labels for heavy RVs versus light RVs may confuse consumers.

RVIA commented that the majority of ''travel trailers,'' some smaller motor homes and virtually all RV conversion vehicles [5] have GVWRs of 4,536 kg (10,000 pounds) or less and are subject to the FMVSS No. 110 load carrying capacity labeling requirements. Travel trailers with GVWRs greater than 4,536 kg (10,000 pounds) and most motor homes would be subject to the proposed FMVSS No. 120 NPRM CCC label. RVIA recommended consistency of the information provided to RV consumers regardless of the RV's size. RVIA stated that all RVs regardless of their GVWRs have the primary function of providing mobile, temporary, on-site living quarters, and all contain residential features such as sleeping accommodations, bathrooms, cooking facilities, water storage and cargo storage.

RVIA cited its 2004 sales statistics that approximately 250,300 RVs shipped were light RVs and would be subject to FMVSS No. 110 requirements, and approximately 112,300 RVs shipped were heavy RVs and would be subject to FMVSS No. 120 requirements. RVIA said that if the proposed CCC label requirements are limited to heavy RVs, a large portion of the overloading problem would not be addressed and different labels for different classes of RVs would confuse consumers, minimizing the benefits of the new RV labeling requirements.

Since NHTSA seeks to apply the load carrying capacity label requirements most effectively, it has decided to apply the new requirements to all RVs that fit the appropriate definitions, regardless of GVWR. We believe this is a logical outgrowth of the proposal, and note that the request for wider applicability came from the RVIA and RVDA which represent approximately 95 percent of the RV industry, consisting of many small businesses. As they explained in the comments, both light and heavy RVs have similar uses, loading characteristics, and overloading issues; a substantial number of RVs sold have GVWRs of 4,536 kg (10,000 pounds) or less. Applying this final rule to all RVs will require RV load carrying capacity label requirements to appear in both Standard Nos. 110 and 120.

We note that since the August 2005 NPRM was published, amendments to Standard Nos. 110 and 120 took effect on September 1, 2005. Before the amendments, Standard No. 110 applied to passenger cars and Standard No. 120 applied to other vehicles. After the amendments took effect, Standard No. 110 applies to vehicles with GVWRs of 4,536 kg (10,000 pounds) or less, and Standard No. 120 applies to vehicles with a GVWR of more than 4,536 kg (10,000 pounds).

2. Excluding Light RVs from FMVSS No. 110 Labeling Requirements—As part of its recommended labeling format, RVIA suggested that light RVs be excluded from the labeling requirements of FMVSS No. 110, and RVs only be subject to RVIA's suggested format. If adopted, RVIA's recommendation would mean that for light RVs, load carrying capacity information would not be required on the FMVSS No. 110 tire placard. Manufacturers that are RVIA members would place RVIA's suggested small label with similar load carrying capacity information in the same area as the tire placard.

NHTSA has decided not to change the existing tire placard requirements in

[4] Throughout this document, ''light RV'' means a recreation vehicle with a GVWR of 4,536 kg (10,000 pounds) or less. ''Heavy RV'' means a recreation vehicle with a GVWR of more than 4,536 kg. Motor homes, travel trailers (as proposed to be defined in the NPRM) and recreation vehicle trailers are all subgroups of recreation vehicles (RVs).

[5] As defined by RVIA, conversion vehicle means vans, SUVs and pickup trucks that are manufactured by an automaker, then altered for recreational use by a company specializing in customizing vehicles.

FMVSS No. 110. Some of these requirements have recently become effective and additional amendments are scheduled to become effective in the near future. However, in this final rule, NHTSA is adding additional language to FMVSS Nos. 110 and 120 in order to accommodate the RV load carrying capacity labeling requirements. As more fully explained in the section titled ''Location of Labels,'' this final rule has an alternative labeling scheme that prevents duplication of information when both a tire placard and a motor home OCCC label or RV trailer CCC label are located in the same area of the vehicle.

B. Definitions

1. NPRM—In the August 2005 NPRM, NHTSA proposed that the rule apply to motor homes and travel trailers. We proposed to revise the definition of ''motor home'' (included in 49 CFR Part 571.3) to refer to ''propane'' rather than ''LP gas supply'' and to add a new definition of ''travel trailer'' to Part 571.3 as follows:

Motor home means a multi-purpose vehicle with motive power that is designed to provide temporary residential accommodations, as evidenced by the presence of at least four of the following facilities: Cooking; refrigeration or ice box; self-contained toilet; heating and/or air conditioning; a potable water supply system including a faucet and a sink; and a separate 110–125 volt electrical power supply and/or propane.

Travel trailer means a trailer designed to be drawn by a vehicle with motive power by means of a bumper or frame hitch or a special hitch in a truck bed and is designed to provide temporary residential accommodations, as evidenced by the presence of at least four of the following facilities: Cooking; refrigeration or ice box; self-contained toilet; heating and/or air conditioning; a potable water supply system including a faucet and a sink; and a separate 110–125 volt electrical power supply and/or propane.

2. The Definition of ''Travel Trailer'' and ''Motor Home''—A definition of ''travel trailer'' was proposed in the NPRM since the majority of heavy RV trailers, including 5th wheel travel trailers and all other travel trailers are considered ''travel trailers.'' As more fully explained elsewhere in this final rule, since this final rule applies the motor home OCCC label and the RV trailer CCC label to all RVs regardless of GVWR, the definition must apply to more types of RV trailers. NHTSA believes that it is therefore necessary to make the trailer term being defined more generic.

In this final rule, NHTSA changes the term being defined from ''travel trailer'' to ''recreation vehicle trailer.'' The load carrying capacity labeling requirements in this final rule apply to all vehicles that meet the definitions of ''motor home'' and ''recreation vehicle trailer'' (RV trailer). RV trailers include all towable RVs such as folding camping trailers, conventional travel trailers, fifth-wheel travel trailers, travel trailers with expansion ends, sport utility RV trailers, and all other trailers intended for recreational purposes that meet the definition of ''recreation vehicle trailer.''

Raising similar concerns, NATM commented that the ''travel trailer'' definition inadvertently includes ordinary cargo trailers with built-in living quarters, trailers that NATM's members (few of whom are members of RVIA) build primarily for transporting horses, livestock, automobiles and other commercial products. These cargo trailers also include four of the six specified facilities NHTSA proposed as evidence of temporary living or residential accommodations.

These ''living quarters'' or facilities are often installed after the horse trailer or auto hauler leaves the trailer manufacturer's plant. Since these living quarter-equipped cargo trailers are designed primarily to haul commercial cargo, their living quarters occupy much less floor space than do RV travel trailers. The cargo trailers are not labeled to disclose cargo carrying capacity. NATM argued that mandating their labeling with a RV trailer CCC label would impose an unnecessary burden upon these manufacturers, most of which are small businesses.

NATM asked NHTSA to revise the proposed definition of ''travel trailer'' to include the following exception to the definition: ''* * * except trailers designed primarily to transport cargo.'' It argued that this more limited definition is fully consistent with the intent of the proposed new consumer-labeling requirement.

NHTSA agrees with NATM that it did not intend the definition of ''travel trailer'' to include the types of commercial cargo trailers that NATM described in its comment. Trailers designed to accommodate cargo such as livestock and racing cars usually have ample space and GVWR for such cargo, and the space allotted for living quarters is incidental. Therefore, in this final rule, the definition of ''recreation vehicle trailer'' will not include trailers ''designed primarily to transport cargo.''

NHTSA further notes that trailers ''designed primarily to transport cargo'' does not include trailers (used for personal purposes) known as ''sport utility RVs'' or ''toy haulers.'' These trailers usually have spacious rather than incidental living quarters and provide a cargo area for smaller items for personal use such as motorcycles, mountain bikes, all terrain vehicles (ATVs), snowmobiles, canoes or other types of recreational gear. NHTSA intends these vehicles to be included in definition of ''recreation vehicle trailer'' and be subject to the requirements of this final rule.

RVIA commented that the definition of ''travel trailer'' inadvertently excludes some folding camping trailers which collapse into a low profile unit in the travel mode. Upon reaching the camping destination, the unit when deployed has a ''pop-up'' roof, padded sleeping surface extensions and canvas side walls. Some of the smaller and less expensive models may not have four of the six specified facilities noted in the proposed ''travel trailer'' definition. RVIA suggested that these smaller folding camping trailers would be covered by modifying the definition of ''travel trailer'' to focus on the primary purpose of the trailer, not simply the presence of certain amenities alone. Thus, the definition recommended by RVIA would only require one of the facilities proposed in the NPRM to be considered a ''recreation vehicle trailer.''

NHTSA has decided not to adopt RVIA's comment. The definition for ''travel trailer'' proposed in the NPRM was fashioned after the definition of ''motor home'' at 49 CFR 571.3, and to minimize confusion, NHTSA seeks to keep the ''facilities'' and the number of facilities needed to provide temporary residential accommodations in both definitions consistent.

In this final rule, the folding camping trailers that are not subject to the heavy RV CCC label requirements will have GVWRs of 4,536 kilograms (10,000 pounds) or less and will be required to have tire placard load carrying capacity information required by FMVSS No. 110. NHTSA does not believe that the folding camping trailers are significantly contributing to the RV overloading problem, as when the trailer is folded, there is little room for cargo.

Finally, in this final rule, ''motor homes'' will include all motorized RVs such as Type A motor homes, Type B motor homes, Type C motor homes, van conversions, truck conversions, sport-utility conversions, and other motor vehicles that meet the definition of ''motor home.'' There were no comments to the proposed change to the ''motor home'' definition to refer to propane. Thus, the proposed definition of ''motor home'' is adopted as final.

3. NPRM's Term ''Tongue Load Rating'' for RV Trailers—NATM

commented that the term ''tongue load rating'' used in the NPRM is not recognized in the trailer industry, and recommended that ''measured tongue weight'' be used instead. NATM also recommended that S10.2 in the proposed regulatory text of FMVSS No. 120 be changed to ''On travel trailers, the sum of the GAWRs of all axles on the vehicle plus the *minimum recommended tongue weight* must not be less than the GVWR.'' NATM said that manufacturers cannot control the loading patterns of end-users and therefore, most manufacturers recommend a range of tongue weights for their particular trailer designs.

RVIA commented that the term ''tongue load rating'' is undefined and suggested that the term ''hitch/pin load rating'' be used in place of ''tongue load rating'' in the final rule.

NHTSA agrees that the term ''tongue load rating'' may not be widely used in the trailer industry and agrees with the public comments. Therefore, in the final rule, NHTSA will make the appropriate changes to the regulatory text and will use the terms ''tongue weight'' and/or ''hitch pin load'' rather than ''tongue load rating.''

''Tongue weight'' means the downward force exerted on the ball of a hitch by the trailer coupler. In the case of a fifth-wheel travel trailer, it is the downward force exerted on the truck bed by the trailer. The manufacturer will specify the tongue weight or the tongue weight range according to the design of a particular trailer. Tongue weights are typically 10 to 14 percent of the trailer's weight; however, the range can vary depending on the trailer hitch configuration and the number of axles on the trailer. The axle ratings of the trailer can be based on the fact that portions of the trailer weight will be transferred to the tow vehicle. If a range is specified, the axles should be designed to accommodate the worst-case scenario which would be when tongue weight is at the minimum portion of its range and more weight is shifted to the axles. Consumers should load their trailers in a fashion that keeps the tongue weight within the range recommended by the manufacturer.

C. GVWR, GAWR and Tire Load Information for Motor Homes and Recreation Vehicle Trailers

1. NPRM—In the NPRM, we proposed to amend FMVSS No. 120 to require that the sum of the GAWRs of all the axles on a motor home and that the sum of the GAWRs of all the axles on a ''travel trailer'' plus the ''tongue load rating'' not be less than the GVWR of each respective vehicle. We noted that the proposed requirement would not prevent individual tires on motor homes and ''travel trailers'' from being overloaded.

In the NPRM, we also proposed to require that the size of the tires that are on motor homes and ''travel trailers'' at the time of first retail sale be the same size as the tires on the tire label required by FMVSS No. 120. FMVSS No. 120 requires certain information on either the Part 567 vehicle certification label or on a separate tire information label.[6] Since inflation tire pressure is critical to tire loading, the tire label provides the recommended tire size and cold inflation pressure for the vehicle. If a different tire is placed on the vehicle, it may require a different tire inflation pressure. Consumers may refer to the tire label for inflation pressures. If the size of the tire on the label and the size of the tire on the vehicle are not the same, the consumer may inflate the vehicle's tires to the wrong pressure. In some cases, inflating vehicle tires to the wrong pressure can intensify the effects of overloading.

We also proposed that manufacturers disclose the CCC of motor homes and ''travel trailers.'' NHTSA anticipated that consumers would use this information both to purchase vehicles with CCCs that will meet their needs and as guidance for how they may subsequently load their vehicles in a safe manner. However, we did not propose to specify a minimum required CCC for any motor home or travel trailer.

2. Requirement That Heavy RVs be Delivered to the Consumer with the Same Size Tires That Are Listed on the Vehicle Certification Label or Tire Information Label—As earlier noted, in the NPRM, NHTSA proposed to require that RVs with GVWRs of more than 4,536 kilograms (10,000 pounds) have tires at first retail sale that are the same size as the tires listed on the vehicle certification label or tire information label. RMA commented that the requirement should read: ''The tires on each motor home and travel trailer at first retail sale must have the *same or greater tire size and load rating* as the tire size and load rating on the labeling required by S5.3 (of FMVSS No. 120). If the tire/wheel assemblies on the motor home or travel trailer at first retail sale are heavier than those listed on the required label, the additional weight must be added to the unloaded vehicle weight (UVW).''

RVDA commented that after consulting with many dealers and aftermarket suppliers of RVs, it believes a requirement that RVs with GVWRs of more than 4,536 kg have tires at first retail sale that are the same size as the tires listed on the vehicle certification label or tire information label is not a problem in the RV industry for either motorized RVs or travel trailers. RVDA's understanding is that if a customer requests customized tires or rims on an RV, the dealer can only install tires and rims that are the same size as the sizes provided on the tire information label. Otherwise, dealers will not perform the customization.

NHTSA notes that the proposed requirement was not intended to prevent dealers/service facilities from changing the tire size and providing customized tires with vehicles before first retail sale. It simply states that the size of the tires on the vehicle at first retail sale must agree with the size of the tires listed on the tire information label. The dealer may replace the tires and correct or replace the tire information label or the vehicle certification label to reflect the new tire size so long as the vehicle continues to meet all applicable requirements. Therefore, revising the requirement according to RMA's suggestion would not be necessary as it is desirable that the tire size on the vehicle and the tire size on the label agree.

With respect to RVDA's comment, NHTSA notes that the dealer/service facility may change the tires to a different size as long as the tire size information on the label is corrected to agree with the tire size on the vehicle at the time of first retail sale and the vehicle otherwise continues to meet all applicable requirements. The label assures that the consumer will always know the size of the tires that were on the vehicle at delivery which presumably is a tire size recommended by the vehicle manufacturer. If the replacement tires weigh more than the original tires, the additional weight will be included in the total weight added between final vehicle certification and first retail sale.

Dealers/service facilities usually correct tire sizes on FMVSS No. 110 tire placards by either replacing or obscuring the original tire placard with an identical tire placard with corrected tire sizes or obscuring a portion of the original tire placard with an overlay that matches the original tire placard and allows new tire sizes to be entered. If the new tire sizes are not machine

[6] In FMVSS No. 120, S5.3(a) provides the option of including tire information on the certification label required by § 567.4 or § 567.5. In FMVSS No. 120, S5.3(b) provides the option of including the tire information on a tire information label affixed to the vehicle in the manner, location and form described in 49 CFR 567.4(b) through (f). Note that § 567(d) applies only to trailers.

printed on the replacement tire placard or partial overlay and there are blanks on these labels, the new tire sizes may be legibly entered with a black, indelible, fine-point marker. This final rule does not permit crossing out incorrect values and entering new values as a means of updating tire sizes. The final rule requires dealers to replace or obscure the FMVSS No. 120 tire information label or vehicle certification label to reflect the new tire sizes.

3. Whether the ''Make Inoperative'' Prohibition Applies to the FMVSS No. 110 Vehicle Placard and Optional Tire Inflation Pressure Label—NHTSA received comments from SEMA, NTEA, NADA and ADA regarding how the ''make inoperative'' prohibition applies to the FMVSS No. 110 tire placard after first retail sale. The comments asked if modifiers and repair facilities are required to update and/or replace tire placard/labels or whether the requirement ends after first retail sale.

Recent NHTSA interpretations issued to NMEDA, SEMA and Bruno on April 7, 2006, explain that it would not be a violation of the 49 U.S.C. § 30122 ''make inoperative'' prohibition, with respect to S4.3 of FMVSS No. 110, if modifiers change the vehicle's tire size, cold inflation pressure, and/or cargo capacity rating after first retail sale and do not update the tire placard.

In evaluating this question, NHTSA focused on the language of S4.3 of FMVSS No. 110. One of the items of safety information required by S4.3 is identified in paragraph (d), which reads:

> Tire size designation, indicated by the headings ''size'' or ''*original tire size*'' or ''*original size*,'' and ''spare tire'' or ''spare,'' *for the tires installed at the time of the first purchase for purposes other than resale*. For full size spare tires, the statement ''see above'' may, at the manufacturer's option replace the tire size designation. If no spare tire is provided, the word ''none'' must replace the tire size designation;'' [Emphasis added.]

The agency thus stated that the requirement for one of the critical items of safety information to be provided on the tire placard is specifically expressed in terms of the ''tires installed at the time of first purchase for purposes other than resale.'' NHTSA also noted that there is a relationship between a number of the items required to be specified on the tire placard.

NHTSA further observed that regardless of what changes a modifier may make to a vehicle, it does not change the size of the tires that were installed at the time of the first purchase for purposes other than resale (the information S4.3 of FMVSS No. 110 requires to be on the placard). Given this, and recognizing the relationship between a number of the items required to be specified on the tire placard, NHTSA expressed its opinion that it would not be a violation of the Section 30122 ''make inoperative'' provision, with respect to S4.3 of FMVSS No. 110, if modifiers change the vehicle's tire size, cold inflation pressure, and/or cargo capacity rating, but do not update the tire placard.[7]

Similarly, the requirement to correct the weight value that the weight of occupants and cargo should never exceed on the motor home OCCC label or the value that the weight of cargo should never exceed on the RV trailer CCC label ends after first retail sale. After first retail sale, it is up to the consumer to subtract any weight added after first retail sale from the vehicle's load carrying capacity.

NHTSA notes, however, that in accordance with 49 CFR 595.7, businesses that modify vehicles to accommodate people with disabilities must provide the vehicle owner with a document that indicates any reduction in the load carrying capacity of a vehicle of more than 100 kg (220 lb) after the modifications are complete.

D. Determining Occupant Capacity Weight

1. NPRM—In the NPRM, NHTSA stated that in order to determine the CCC of a motor home, the occupant capacity weight (OCW) must be determined. The OCW is then grouped with the other weight factors (such as weight of full fresh water, propane and the unloaded vehicle weight) that must be subtracted from the vehicle's GVWR in order to determine the portion of the GVWR available for carrying cargo. Therefore, in the NPRM, NHTSA proposed that the greater of the total number of safety belt-equipped seating positions or the total number of sleeping positions be multiplied by 68 kilograms (150 pounds) to determine the OCW. This OCW value would be used to determine the weight of maximum occupants for the motor home. NHTSA believed that this method would capture the worst-case OCW scenario in order to prevent the possibility of overloading.

2. RV Occupant Capacity Weight (OCW) and the Weight of a Standard Occupant—Seymour agreed with NHTSA, commenting that since families often carry a tent or tow a travel trailer for children, basing the OCW strictly on the number of sleeping positions does not necessarily reflect the number of passengers who will be traveling in the vehicle. Seymour further commented that the allocation of 68 kg (150 pounds) per person in the standard is an underestimate and will lead to overloading.

Walker also agreed with the NHTSA proposal, commenting that the use of only sleeping positions to determine the number of occupants the RV is intended to carry undermines the entire cargo carrying capacity calculation. The number of occupants a motor home is intended to carry must also be based on the number of seats provided. Basing the OCW calculation strictly on sleeping positions allows manufacturers to boost the available cargo carrying capacity and increases the likelihood that the RV will be operated in an overloaded condition when seating positions are fully occupied. Walker recommended the practice be prohibited.

RMA commented that labeling and/or instructions should indicate that cargo weight could be substituted for occupant weight if fewer than maximum occupants are transported. Consumers would thus get maximum use out of their available load carrying capacity. RMA also commented that the weight allocation of 68 kg (150 pounds) per occupant is low.

RVIA commented that in virtually every case, the total safety belt-equipped seating positions in a motor home will be greater than the number of sleeping positions. NHTSA's method of determining OCW assumes that all safety belt-equipped seating positions will always be occupied when determining the vehicle's cargo carrying capacity. RVIA stated that while it is certainly possible, it is unrealistic and counter-productive to presume that this is always the case. That organization argued that, consequently, the consumer will be misled by an inaccurately low cargo carrying capacity value whenever there are fewer passengers in the vehicle than there are safety belt-equipped seating positions. In its comments, RVIA suggested alternative labels to avoid this confusion and permit consumers to arrive at a more accurate load carrying capacity value for their particular loading situation.

In response to the comments, NHTSA notes that its proposed definition for OCW intended to capture the maximum OCW for a motor home, ensuring that a vehicle with maximum occupants would not be overloaded. NHTSA

[7] In the interpretation letter, NHTSA went on to note that the potential inconsistency between the information on the placard and the actual vehicle could be ''misleading and dangerous to vehicle operators.'' Thus, NHTSA encouraged any party that modifies a used vehicle ''so that the tire safety information is no longer accurate to either add a new label to the vehicle which indicates the correct tire safety information or add a warning label * * * indicating that the tire safety information placard is no longer accurate.''

envisioned that consumers would use the information on the label to determine the amount of additional cargo carrying capacity that exists when fewer than maximum occupants are transported. In this rulemaking, NHTSA used an occupant weight of 68 kg (150 pounds), as it is a value currently used throughout the FMVSS. The selection of a new, different value would require research.

As discussed in the section on label content and format, in this final rule, NHTSA adopts labels that display the total, maximum weight allotted for occupants and cargo. Adoption of the abbreviated format (that displays the total, maximum weight for occupants plus cargo) supersedes the need to define individually OCW or the standard weight of an occupant. The abbreviated format, as suggested by RVIA, permits consumers to get maximum use of their available load carrying capacity as the weights of occupants and cargo (including on-board water) are based on actual quantities. In addition, it permits manufacturers to state their actual load carrying capacity for occupants and cargo instead of understating the cargo carrying capacity value.

E. Location of Labels

1. NPRM—To promote a consistent label location, which may increase the number of times consumers see the label and thus increase label effectiveness, in the NPRM, we proposed that the label be affixed to the interior of the forward-most exterior passenger door on the right side of the vehicle and be visible. Such a door is used repeatedly when entering, exiting, and loading the vehicle. In addition, such a door will have the surface area to accommodate the size of the required label.

2. Revised RV Load Carrying Capacity Labels—In its comments, the RVIA suggested a revised labeling format that would require each RV to have information in three locations: (1) An abbreviated label in locations similar to those specified for tire information under FMVSS Nos. 110 and 120; (2) a more detailed label that would be placed on the inside of a prominent cabinet door in the living quarters of the vehicle; and (3) information in the vehicle owner's manual.

NHTSA agrees, in part, with the revised format suggested by RVIA. NHTSA believes that the most important time for RV purchasers occurs at the point-of-sale. Those who are not exposed to the correct load carrying capacity information and those who see the load carrying capacity information but do not understand it could follow through with their purchase uninformed of the vehicle's load carrying capacity. It is not until after the vehicle is purchased and in use that overloading issues are realized. Then, consumers may experience unexplained control problems, premature tire wear, tire blowouts, rim failures, suspension component failures, and other issues. For these reasons, NHTSA remains in favor of a single label requirement providing concise information in a prominent location on the vehicle. Based on comments to the NPRM, in this final rule, NHTSA will supplement the RVIA's suggested abbreviated label with additional information, and will make them the only labels required.

3. Label Locations for Heavy RVs and All Light Vehicles—In the NPRM, NHTSA proposed that the CCC labels be affixed to the interior of the forward-most exterior passenger door on the right side of the vehicle. NHTSA stated its belief that such a door will be heavily used while loading cargo giving the label maximum exposure. Also, since such a location is not crowded with other labels, the CCC labels would be more recognizable and would have a higher probability of being noticed by the consumer during the sale of the vehicle.

Walker commented that the CCC label should be placed in a location similar to the ''sticker'' label placed uniformly on a conspicuous window on new cars. Then a permanent label could be placed in a prominent location elsewhere on the vehicle. He also commented that RV sale documents should have a required acknowledgement referencing the aspects of weight, overloading and add-ons. NHTSA notes that the location recommended by Walker is already the location for information required by the Automobile Information Disclosure Act (AIDA) (15 U.S.C. 1231–1233). Adding the CCC label to the AIDA location could confuse potential customers with additional information that is not related to AIDA requirements. Matters involving RV sales documents are subject to State law, and are outside the scope of this rulemaking.

RVDA asked NHTSA to provide RV manufacturers with reasonable flexibility in label placement. RVDA stated that RV floor plans for motorized RVs and travel trailers vary widely. Some motorized RVs do not have driver-side or passenger-side front doors that enter into the living quarters of the vehicle. In some RVs, occupants enter from the back and in others, occupants enter from the front door to the cab area. RVDA further stated that some RVs have extensive trim packages covering the door while others have glass doors and screen doors where the labels would be placed. RVDA said that in most situations the label would likely be located in the middle of the living room/kitchen which may result in the consumer removing it or covering it up.

RVIA had comments similar to those from RVDA. RVIA commented that NHTSA's proposed requirement would mean that most RVs would have a large, technical, aesthetically displeasing, stick-on label in the midst of the owner's living quarters. RVIA also commented that the proposed label location fails to take Type C and Type B motor homes into consideration. For instance, Type C motor homes are typically built on a modified truck chassis and Type B motor homes are typically built on a full sized van chassis. For such vehicles, the forward-most exterior passenger door on the right side of the vehicle is the typical vehicle style door providing access to the front passenger seat. RVIA stated that given the presence of arm rests, map compartments, beverage holders, speakers, windows and window controls, it may be difficult to find a place that will accommodate the label on the tens of thousands of Type C and B motor homes built each year.

NHTSA believes that in order to be as effective as possible, the label must be seen by the consumer during the sale of the vehicle, and that the label would be more visible in the location specified in the NPRM than it would be on the ''B'' pillar, on the inside of a cabinet door or in the vehicle owner's manual. If, due to aesthetics, the specified location [8] results in the label looking intrusive, the label will stand out to consumers. Since the information on the label specified in this final rule is more concise than that specified in the NPRM, the label is potentially physically smaller and should not present as much of an aesthetic problem as the label proposed in the NPRM.

If there are two doors installed in the same location, the temporary or permanent load carrying capacity label must be affixed to the inside of the innermost door. For example, many RVs have an inner screen door and outer solid door hinged in the same location. The doors can be used individually or can be latched together and used as a single door. The label must be affixed to the inside solid portion of the inner screen door so it will be visible at all times. If it were placed on the inside of the solid door, the label could be hidden

[8] For the purposes of this document, ''specified location'' means the interior of the forward-most exterior passenger door on the right side of the vehicle.

when the doors are latched together or would be viewed through screening. On Type B and Type C motor homes, the temporary or permanent load carrying capacity label will be placed on the inside of the passenger door to the cab of the vehicle.

Therefore, this final rule specifies the same location as that proposed in the NPRM (interior of the forward-most exterior passenger door on the right side of the vehicle). It should be noted, however, if there are two doors installed in the same location, the temporary or permanent load carrying capacity label must be affixed to the inside of the inner-most door. For example, many RVs have an inner screen door and outer solid door hinged in the same location. The doors can be used individually or can be latched together and used as a single door. The label must be affixed to the inside solid portion of the inner screen door so it will be visible at all times. If it were placed on the inside of the solid door, the label could be hidden when the doors are latched together or would be viewed through screening. On Type B and Type C motor homes, the temporary or permanent load carrying capacity label will be placed on the inside of the passenger door to the cab of the vehicle. Also, if no doors exist on the right side of the vehicle, the permanent or temporary load carrying capacity label will be placed on the inside of the inner door on the rear of the vehicle.

However, in order to provide flexibility in situations where this location may create a label that is overly obtrusive for vehicle users, in this final rule, NHTSA permits manufacturers the option of placing a temporary label in the specified location and applying an identical permanent label in the area of the vehicle specified by FMVSS Nos. 110 and 120 for tire information. This approach places the information in a prominent location during the sale of the RV yet allows the label to be removed by the consumer after purchase if aesthetically displeasing. In such cases, an identical label will remain permanently affixed in the same area specified for tire information.

NMMA recommended a ''Plain English'' Guide that explains this final rule's labeling requirements to manufacturers and dealers. Appendix A of this final rule (following the final rule regulatory text) summarizes the label requirements for various vehicle/GVWR combinations.

4. Location of the FMVSS No. 110 Load Carrying Capacity Modification Label—The Alliance noted that the NPRM provisions would require the load carrying capacity modification label to be placed within 25 mm of the tire placard when the load carrying capacity modification label is used to correct load carrying capacity information. It requested that in cases where there is no room for the load carrying capacity modification label within 25 mm of the tire placard, that the rule allow the load carrying capacity modification label to be placed in any location allotted for the tire placard. In such cases, a small label near the tire placard could refer the consumer to the other location.

In this final rule NHTSA has clarified that the tire placard, as well as other sources of load carrying capacity information may be corrected by replacing/modifying existing labels or adding the load carrying capacity modification label within 25 mm of the tire placard or original labeling. There are many location alternatives offered by FMVSS No. 110 at S4.3 for tire placard placement.[9] It is suggested that a location be selected where there is room for placement of the load carrying capacity modification label within 25 mm if necessary.

For example, the manufacturer of a light RV that applies a temporary OCCC or RV trailer CCC label in the specified location (visible on the interior of the forward-most exterior passenger door on the right side of the vehicle) knows that there must be room within 25 mm of the tire placard for two labels. One is a permanent RV trailer or motor home supplemental label which will be installed by the manufacturer itself. The other is a permanent load carrying capacity modification label that may have to be installed by the dealer or service facility if the added weight threshold is exceeded. Therefore, the vehicle placard should be placed in an area of the ''B'' pillar where there is room for these labels. If the manufacturer of the light RV is placing a permanent OCCC or RV trailer CCC label in the specified location, then it is only required to assure that there is room for a possible load carrying capacity modification label within 25 mm of the tire placard in case it must be applied by the dealer or service facility if the added weight threshold is exceeded. If there is no room for the dealer to apply a modification label near the placard, then the placard must be modified or replaced. NHTSA declines to permit non-substantive labels that only direct consumers to the location of other labels.

F. Label Format and Content

1. NPRM—In the NPRM, we stated that we seek to provide purchasers of motor homes and travel trailers with information about the vehicles' CCC. NHTSA stated its belief that the labels should also provide consumers with a detailed explanation of how the CCC is calculated, thus enabling each consumer to adjust the values according to their particular applications. For example, if there are only two occupants riding in a motor home designed for six occupants, there would be more capacity for cargo. NHTSA proposed a label similar to the RVIA label that is currently voluntarily used by many companies. Although RVIA requires its labels on all member-manufactured RVs, in the NPRM, NHTSA proposed labels only for heavy RVs as it believed, at the time, that these heavier vehicles were more susceptible to overloading.

NHTSA also stated its belief that the proposed label formats have information consumers can use while comparison shopping for motor homes or travel trailers. The labels would also serve as a reference to recreational vehicle owners when the owners are loading cargo.

NHTSA proposed that the label for travel trailers would include the trailer tongue load rating and the statement: ''The weight of cargo should never exceed XXX kilograms (XXX pounds)'' in black lettering on yellow background. The travel trailer manufacturer would be responsible for determining the trailer tongue load rating and the cargo carrying capacity of its travel trailer, and for providing this information on its travel trailer label.

NHTSA proposed that the label for motor homes would include the statement: ''The combined weight of occupants and cargo should never exceed XXX kilograms (XXX pounds)'' in black lettering on yellow background. This statement is the same as that required for vehicles with GVWRs of 4,536 kilograms (10,000 pounds) or less under the required FMVSS No. 110 vehicle placard, which became effective on September 1, 2005. The motor home manufacturer would be responsible for determining the cargo carrying capacity of its motor home, and for providing

[9] S4.3 *Placard* of FMVSS No. 110 states in part: ''Each vehicle * * * shall show the information specified * * * on a placard permanently affixed to the driver's side B-pillar. In each vehicle without a driver's side B-pillar and with two doors on the driver's side of the vehicle opening in opposite directions, the placard shall be affixed on the forward edge of the rear side door. If the above locations do not permit the affixing of a placard that is legible, visible and prominent, the placard shall be permanently affixed to the rear edge of the driver's side door. If this location does not permit the affixing of a placard that is legible, visible and prominent, the placard shall be affixed to the inward facing surface of the vehicle next to the driver's seating position. * * *''

this information on its motor home label.

All information on each of the proposed motor home and travel trailer labels would be required to be a minimum print size of 2.4 millimeters (3/32 inches) high and be printed on a contrasting background. The weights on the label would be required to be displayed to the nearest kilogram (with conversion to the nearest pound in parentheses) and must reflect the particular weight specifications of the motor home or travel trailer to which it is affixed as the vehicle leaves the factory.

It was proposed that both labels advise the purchaser that the weight of any dealer-installed equipment must be subtracted from the manufacturer's value of CCC and advise consumers to load cargo appropriately to prevent non-uniform side-to-side and forward-aft loading. In the case of motor homes, it was proposed that the label contain the weight of the maximum hitch load and the advice that the ''tongue weight'' of trailers or vehicles being towed also subtracts from the manufacturer's value of CCC. If the motor home was not delivered with a hitch, this block would be left blank.

NHTSA did not propose that the label refer to the owner's manual, but did not propose to prohibit manufacturers from adding references on the label that refer to specific information included in the owner's manual.

2. Revised RV Load Carrying Capacity Labels—In its comments to the NPRM, RVIA suggested a revised labeling format that would require varied information in three locations. RVIA's suggested format would require each RV to have an abbreviated label, a more detailed label and information in the vehicle owner's manual. Under the RVIA revised format, an abbreviated label would appear on each motorized and towable RV in locations similar to those specified for tire information under FMVSS Nos. 110 and 120. This abbreviated label was intended to provide essential information in a visible location. The abbreviated label for motorized RVs would contain the VIN, the maximum weight value allotted for occupants and cargo and a referral to the vehicle owner's manual for additional information. The abbreviated label for towable RVs would be similar to the motor home label except that it would display the maximum weight value allotted for cargo only, as occupants do not normally ride in a towed RV.

In addition, RVIA's recommended revised format would require more detailed labels that would be placed on the inside of a prominent cabinet door in the living quarters of the vehicle. The more detailed labels for motor homes and towable RVs would repeat the information that appears on the abbreviated labels; however, it would also provide the definitions of GVWR, UVW and CCC and the designated sleeping capacity (for motor homes). In addition, the more detailed labels would provide advisory statements on the effects of dealer installed equipment on CCC and the distribution of cargo.

Also, under the revised format suggested by RVIA, each RV would be required to have information in the vehicle owner's manual. RVIA recommended that vehicle owner's manuals contain the information provided on both the abbreviated and more detailed labels, as well as, information about the loading of cargo, how to weigh a vehicle, towing guidelines and additional definitions.

The revised RVIA format also suggested that the weight of full propane be included in the vehicle's UVW weight and the weight of on-board water be treated as cargo.

NHTSA agrees, in part, with the revised format suggested by RVIA in its comments. However, as stated earlier, NHTSA favors a single label requirement with concise information in a prominent location on the vehicle. The final rule specifies the minimum information necessary to help consumers make informed RV purchasing decisions.

Thus, the motor home label will include the VIN and the weight value that the combined weight of occupants and cargo should never exceed. To this, in this final rule, NHTSA adds requirements for the safety belt equipped seating capacity (number of safety belt equipped seating positions), the weight of a full load of water, the unit weight of water and an advisory that the weight of water and towed vehicle tongue weight is part of cargo [10].

The label for RV trailers will include the VIN and the weight value that the weight of cargo should never exceed. To this, in this final rule, NHTSA adds the weight of a full load of water, the unit weight of water and a caution that the weight of water is part of cargo.[11]

Information about on-board water weight is important because filled water tanks can be a significant portion of the vehicle's total cargo capacity. The safety belt equipped seating capacity is provided because the combined weights of motor home occupants is part of the load carrying capacity equation.

These labels will follow RVIA's suggestions that the weight of a full load of propane be included in the vehicle's UVW and the weight of on-board water be treated as cargo. It is not easy to determine the weight of partially filled propane tanks and propane is usually not off-loaded to make room for additional cargo. Therefore, it is less confusing to include the weight of full propane in the UVW. The level of on-board water can be assessed by the consumer. Campgrounds often provide water hook-ups, making it unnecessary to carry water. In such cases, the absence of water provides more capacity for cargo.

The load carrying capacity information provided on these abbreviated labels for RVs is also consistent with the FMVSS No. 110 load carrying capacity information required on the tire placards of light vehicles. NHTSA believes that the motor home OCCC label and the RV trailer CCC label specified in this final rule promotes commonality of load carrying capacity information between light vehicles and heavy RVs and provides concise, essential, non-confusing information to consumers.

The information provided by these labels is the information consumers need for a quick assessment of a RV's load carrying capacity. Providing load carrying capacity information in this simple form requires that consumers only think about the total weight of occupants, cargo and on-board water for motor homes and the total weight of cargo and on-board water for RV trailers. The definitions and other information on the labels originally proposed in the NPRM are not needed for a quick assessment of load carrying capacity. Manufacturers can provide additional information voluntarily in the vehicle owner's manual. This simple format allows consumers to easily arrive at a more accurate load carrying capacity value for a particular trip as the weight of occupants and on-board water are based on actual quantities and are not automatically based on maximum capacities.

NHTSA believes that by specifying one concise, visible label it is unnecessary to require the additional more detailed label on the inside of a cabinet door in the living quarters of the vehicle or the additional information in the vehicle owner's manual as suggested by RVIA. The advisory regarding dealer installed equipment that appeared on the CCC labels proposed in the NPRM

[10] Throughout this document, this label will be known as the motor home occupant and cargo carrying capacity label or the motor home OCCC label.

[11] Throughout this document, this label will be known as the RV trailer cargo carrying capacity label or the RV trailer CCC label.

is addressed by the load carrying capacity modification label required by this final rule. Definitions are not necessary for consumers to understand the simple statement of occupant and cargo limitations on the label. Also, the need to specify the number of designated sleeping positions has been made moot.

The vehicle owner's manual information suggested by RVIA would also repeat information from the abbreviated and more detailed labels, including definitions not needed for the load carrying capacity determination and other general requirements. Such additional information can be provided to consumers in ways determined by manufacturers and organizations such as the RVIA.

For these reasons, the labels specified in this final rule are as follows:

Motor home occupant and cargo carrying capacity label:

MOTOR HOME OCCUPANT AND CARGO CARRYING CAPACITY
VIN: ##################
THE COMBINED WEIGHT OF OCCUPANTS AND CARGO SHOULD NEVER EXCEED:
XXX kg or XXX lbs
Safety belt equipped seating capacity: XXX
CAUTION:
A full load of water equals XXX kg or XXX lbs of cargo @ 1 kg/L (8.3 lb/gal) and the tongue weight of a towed trailer counts as cargo

Recreation vehicle trailer cargo carrying capacity label:

RECREATION VEHICLE TRAILER CARGO CARRYING CAPACITY
VIN: ##################
THE WEIGHT OF CARGO SHOULD NEVER EXCEED:
XXX kg or XXX lbs
CAUTION:
A full load of water equals XXX kg or XXX lbs of cargo @ 1 kg/L (8.3 lb/gal)

G. Addition of Weight to FMVSS No. 110 Vehicles and to FMVSS No. 120 Motor Homes and Travel Trailers Between Vehicle Certification and First Retail Sale of the Vehicle

1. Proposal Concerning FMVSS No. 110—September 1, 2005 was the effective date of an amendment to FMVSS No. 110, *Tire selection and rims*, which requires manufacturers to affix a tire placard to the vehicle's driver-side B-pillar or to the edge of the driver's door (if no B-pillar exists) which adds the statement: ''The combined weight of occupants and cargo should never exceed XXX kg or XXX lbs.'' to the information previously required on the existing tire placard. Vehicle manufacturers are required to disclose the amount of weight carrying capacity that is available on the vehicle for passengers and cargo. The vehicle manufacturer installs this label when the vehicle is certified.

Manufacturers and dealers have inquired as to what must be done when optional equipment and accessories are added to a vehicle before first retail sale, which increases the vehicle's weight and decreases the weight allotted for passengers and cargo. NHTSA's response to such inquiries has been that the label must be replaced as necessary so that the vehicle has a label with accurate information. NHTSA believes, however, that small increases in weight are insignificant. Moreover, requiring dealers to reprint labels with new information each time a small amount of weight is added to a vehicle is unnecessarily burdensome.

To address these issues, in the NPRM, NHTSA proposed that for FMVSS No. 110 vehicles, if weight equal to or less than 0.5 percent of gross vehicle weight rating (GVWR) is added by the dealer before first retail sale, no additional action is required. If weight greater than 0.5 percent of GVWR is added by the dealer before first retail sale, the dealer would be required to add a label to the vehicle within 25 millimeters (1 inch) of the FMVSS No. 110 tire placard, which discloses the total weight of added items to the nearest kilogram (pound). NHTSA proposed that the label be visible when the FMVSS No. 110 tire placard is read. The label as proposed included blank spaces that represent the value for total added weight. The total added weight would be provided by the dealer when it installs optional accessories and equipment in excess of 0.5 percent of the vehicle's GVWR. To fill out the blank spaces, the dealer need only know the total weight effect of added items. NHTSA stated its belief that dealers can provide the information without weighing vehicles.

2. Proposal Concerning FMVSS No. 120—In the NPRM, NHTSA stated its belief that the proposed changes to FMVSS No. 110 concerning additional dealer-added weight are also appropriate for FMVSS No. 120. In the NPRM, NHTSA proposed that the same method proposed for FMVSS No. 110 vehicles above also be used for motor homes and travel trailers in FMVSS No. 120. If weight equal to or less than 0.5 percent of GVWR is added by the dealer to an FMVSS No. 120 motor home or travel trailer between certification and first retail sale, no additional action is required. If weight greater than 0.5 percent of GVWR is added by the dealer to a FMVSS No. 120 motor home or travel trailer between certification and first retail sale, the dealer would be required to add the following label within 25 millimeters (1 inch) of the FMVSS No. 120 motor home or travel trailer cargo carrying capacity label which discloses the total weight of added items to the nearest kilogram (pound). It was proposed that the label be visible when the FMVSS No. 120 motor home or travel trailer cargo carrying capacity label is read.

The label as proposed included blank spaces that represent the value for total added weight. The total added weight would be provided by the dealer when it installs optional accessories and equipment in excess of 0.5 percent of the vehicle's GVWR. To fill out the blank spaces, dealers need only know

the total weight effect of added items. NHTSA stated its belief that dealers can provide the information without weighing vehicles.

3. Comments and Decision Concerning Weight Added to Heavy RVs and All Light Vehicles After Final Vehicle Certification and Before First Retail Sale—NHTSA received comments from numerous sources arguing that the proposed 0.5 percent GVWR threshold for relabeling requirements to be triggered was too low. Most commenters suggested that the threshold be the lesser of 3 percent GVWR or 100 kg (220 lb). This suggested threshold was based on the 49 CFR 595.7 threshold afforded to those who modify vehicles to accommodate persons with disabilities. NMEDA suggested that the threshold be 20 percent of the vehicle's load carrying capacity. RMA commented that weight equivalent to 0.5 percent of the vehicle's GVWR should be added to the vehicle's UVW which would automatically accommodate add-ons. NATM indicated that trailer manufacturers understate the load carrying capacity of trailers so dealers would not have to worry about optional equipment installed.

Toyota commented that the proposal for adding the load carrying capacity modification label to correct load carrying capacity information when weight is added is burdensome to passenger vehicle manufacturers, distributors and dealers due to the large number of potential labels. The number of combinations of vehicle model weights, optional equipment and accessories greater than the threshold is large. The number of labels required to accommodate all of the various combinations of weights will be in the thousands.

Many of the commenters asked NHTSA to clarify the following issues: To whom the threshold applies; whether CCC information must be corrected when vehicle weight is reduced and load carrying capacity is increased; whether the shipping weight of added items can be used to update load carrying capacity values; and whether the label can still be updated or replaced in lieu of applying the load carrying capacity modification label.

As previously mentioned, the purpose of the load carrying capacity modification label and its applicability threshold is to relieve dealers/service facilities from having to correct load carrying capacity information when insignificant amounts of weight are added to light vehicles and heavy RVs between final vehicle certification and first retail sale. It is also necessary to keep the load carrying capacity information reasonably accurate when significant amounts of weight are added to light vehicles and heavy RVs between final vehicle certification and first retail sale. It is anticipated that dealers/service facilities that handle vehicles such as RVs may have to correct the load carrying capacity information when equipment such as awnings, generators, spare water tanks, and spare fuel tanks are added between final vehicle certification and first retail sale. It is anticipated that dealers/service facilities that handle vehicles such as passenger cars will not have to correct load carrying capacity information very often.

In response to the many comments arguing that the threshold value is too low, NHTSA has reconsidered the threshold for labels concerning reductions in load carrying capacity. For the following reasons, we are raising the threshold to the lesser of 1.5 percent GVWR or 45.4 kg (100 pounds) to distinguish between common transactions for trailer hitches and less common transactions causing larger changes in load carrying capacity.

The most commonly installed heavy item by dealers before first retail sale is a heavy duty Class IV trailer hitch for a pickup truck. Such hitches have an advertised shipping weight of less than 36.3 kg (80 lbs). A relatively small pickup truck for this hitch application would have a GVWR of 2721.6 kg (6000 lbs) or greater. This installation would involve equipment representing 1.33 percent of the vehicle's GVWR or less. However, 5th wheel hitches which are much heavier would still exceed the threshold.

We believe the threshold for added equipment weight of the lesser of 1.5 percent of GWVR or 100 pounds relieves passenger vehicle dealers of the responsibility for label changes in the vast majority of equipment sales without creating a practical safety problem. A vehicle with the maximum weight of added equipment of 1.5 percent of GVWR when also loaded to the maximum weight of passengers and cargo specified in the original label could exceed the tire load rating by 1.5 percent as a worst case. However, NHTSA tire research (for example, Docket NHTSA 2000–8011 item 22) shows that fully inflated tires are not very sensitive to small overloads. Even in a high speed test rigorous enough to fail a third of the tire samples, tires that were slightly overloaded (taking into consideration the curvature of the test wheel) performed comparably to a sample of the same tire make/models with 10 percent less load.

NHTSA does not favor basing the threshold on a percentage of load carrying capacity because that does not yield a predictable limit on the slight overload that becomes possible, as in the case of a threshold tied to GVWR. Although NHTSA would prefer that the load carrying capacity information be as accurate as possible, there is no requirement that prevents manufacturers from understating the load carrying capacity value.

Therefore, if the total combined weight added between final vehicle certification and first retail sale exceeds the lesser of 1.5 percent of the vehicle's GVWR or 100 pounds, the load carrying capacity information must be corrected. This threshold applies to those who add weight to a light vehicle or heavy RV after the final vehicle certification and before first retail sale.

The load carrying capacity modification label which shows the amount by which the load carrying capacity is reduced is also available to alterers of light vehicles. However, if after the alteration, the vehicle qualifies as a motor home or RV trailer, the alterer is required to apply the motor home OCCC label or RV trailer CCC label as specified in this final rule.

Manufacturers that build heavy RVs are required to install a motor home OCCC label or RV trailer CCC label which will provide accurate load carrying capacity information for each vehicle as it is shipped to the dealer. The load carrying capacity modification label/compliance threshold is then available to dealers/service facilities that add additional weight between final vehicle certification and first retail sale.

When a dealer/service facility adds weight that exceeds the lesser of 1.5 percent GVWR or 100 pounds, the load carrying capacity information on the motor home OCCC label or the RV trailer CCC label and the tire placard (if a light vehicle) must be corrected. The dealer/service facility may accomplish this by label replacement, label modification, or the addition of the load carrying capacity modification label near the original label/tire placard.

Replacement labels must be identical to the labels being replaced except for the corrected values. Label modification must be accomplished by a pre-printed overlay which, when applied, obscures the original values while maintaining the original appearance of the label or tire placard. The overlay may have blanks where the original values were, and corrected values may be legibly written in the blanks of the overlay with a black, fine-point, indelible marker. Original labels cannot be modified simply by crossing out incorrect values

on the original label/placard and writing in new values on the original placard.

If the load carrying capacity modification label option is used, the modification label must be placed within 25 mm of the original label it is modifying. Added load carrying capacity modification labels may be pre-printed with the load carrying capacity values blank, and the correct load carrying capacity values may be legibly printed on the label with a black, fine point, indelible marker at the time it is applied.

Because the ''handwritten'' method has proved to be successful in the past, we believe that permitting the ''handwritten'' method for the load carrying capacity modification label will provide consumers with necessary information. Machine printed load carrying capacity modification labels with corrected machine printed values could potentially better ensure legibility than labels with handwritten corrected values. However, we believe requiring only machine printed (including corrected values) load carrying capacity modification labels would result in unnecessary cost burdens. Manufacturers such as Ford have successfully used the ''handwritten'' method to allow dealers to correct vehicle tire information when customers request different tires before first retail sale.

Manufacturers are not prohibited from using load carrying capacity modification labels with machine printed corrected values if they choose. Corrected motor home OCCC labels, RV trailer CCC labels, tire placards and load carrying capacity modification labels must reflect the total weight added after final vehicle certification and before first retail sale. Correcting load carrying capacity information is not required in cases where vehicle weight is reduced and load carrying capacity is increased.

Dealers/service facilities may use any accurate method for determining the weight of added items and subsequently, the total amount the load carrying capacity will be reduced. We note that most consumer electronic bathroom scales have ranges from 0 to 350 pounds and provide repeatable readings within plus or minus one percent of the actual weight. Such scales would be suitable for weighing most added items. The load carrying capacity modification label specified in this final rule is provided below:

CAUTION: LOAD CARRYING CAPACITY REDUCED
Modifications to this vehicle have reduced the original load carrying capacity by _____ kg _____ lbs

Load carrying capacity modification label

NATM commented that the load carrying capacity modification label installed by dealers when additional weight is added should identify the dealer/service facility installing the label for traceability.

NHTSA is not adopting a requirement for dealer/service facility identification on the load carrying capacity modification label described in this final rule. The lack of such a requirement however does not prevent dealers/service facilities from supplying identifying information on load carrying capacity modification labels or voluntarily applying a dealer identification label near the load carrying capacity modification label. Requiring dealers to provide identifying information on load carrying capacity modification labels would negate the label's generic qualities.

To summarize, in this final rule, when the load carrying capacity is modified between final vehicle certification and the first retail sale, NHTSA permits the use of generic labels where corrected values can be legibly entered using a black, fine point, indelible marker. This permits dealers to stock one generic load carrying capacity modification label. Also, in this final rule, the addition of the load carrying capacity modification label is one of three options that can be used to correct load carrying capacity information. Dealers/service facilities are permitted to: (1) Replace existing tire placards, motor home OCCC labels or RV trailer CCC labels with new placards/labels containing correct load carrying capacity information; (2) modify existing tire placards, motor home OCCC labels or RV trailer CCC labels so they display correct load carrying capacity information; or (3) add a load carrying capacity modification label within 25 mm of the existing tire placard and/or the motor home OCCC label or RV trailer CCC label.

In addition, this final rule adopts a threshold for correcting load carrying capacity information of the lesser of 1.5 percent of GVWR or 100 pounds, greatly decreasing the need to correct the information.

H. Other Issues

1. *Whether the Final Rule Should Protect Against Overloading Tires, Wheels, Axles and Suspensions on RVs*—NHTSA received numerous comments to the NPRM which suggested other possible actions that may be taken in addition to or in lieu of the proposed labeling approach. Weston, a private citizen who during his first long trip with a 2005, 36-foot, 5th wheel travel trailer experienced two rim failures resulting in tire deflation, suggested that NHTSA address common practices for suspension component sizing to include a safety factor built into the design of axles, suspension components, wheels and tires to accommodate horizontal and vertical dynamic loads that are higher than the static loads normally measured.

Weston also argued that to allow for adequate load carrying capacity, manufacturers should be required to add a minimum safety factor of 20 to 25 percent when sizing axles on RV trailers. Weston stated further that motorized and towable RVs should be equipped with tire pressure monitoring systems (TPMS), that manufacturers of RVs should be required to provide ''adequacy of design,'' and that NHTSA should consider the situation where dealers add weight to RVs that does not exceed the vehicle's GVWR but still exceeds the vehicle's gross axle weight rating (GAWR). In addition, Weston commented that a government oversight office should be formed to police the RV industry and that upon discovery of a problem RV manufacturers should be required to notify customers within 48 hours.

Walker commented that drivers of RVs over a specified weight should be

required to have specific training and license endorsements to demonstrate a minimum level of knowledge. He also argued that both the State DOT and Federal DOT should employ spot checks for RVs to assure that they are not over weight or over length.

RMA commented that the NPRM does not prevent individual tires on RVs from being overloaded. RMA further commented that a requirement of 10 to 25 percent tire reserve load above GVWR would assure sufficient capacity in the event of spot overloading and/or poor inflation pressure maintenance. RMA also suggested that consideration should be given to the labeling of major storage/cargo compartments with their maximum load carrying capacity to assure proper load distribution.

NHTSA recognizes that there are numerous aspects to the problem of potential RV overloading. Current requirements, as well as the requirements in this final rule do not specifically regulate suspension components. We believe, however, that the labeling requirements that appear in this final rule will improve consumer awareness, purchase decisions and RV loading practices. It is anticipated that the motor home OCCC label or RV trailer CCC label that will be provided on each RV will encourage consumers to purchase RVs with a load carrying capacity adequate for their needs.

NHTSA's Office of Defects Investigations (ODI) continually compiles data and responds to complaints from consumers regarding various RV issues. Many of these complaints and issues are related to the failure of RV suspension components, individual axles, rims and tires. Many complaints are investigated for defects in materials and design, and all complaints become part of a permanent database that is used to trigger further investigations and recalls. NHTSA's Office of Vehicle Safety Compliance (OVSC) enforces current NHTSA regulations and will enforce the requirements in this final rule when it becomes effective. We note that actual RV crash data specific to crashes where an overloaded RV is a contributing factor are rare. Statistical databases and investigation techniques usually do not capture overloading related attributes. NHTSA continuously monitors all of its databases for issues relative to vehicle safety and takes appropriate action when necessary.

As indicated above, Weston commented that TPMS should be required on all RVs. NHTSA's TPMS requirements are specified at FMVSS No. 138, *Tire pressure monitoring systems* and are currently being phased in. Full compliance must occur on and after September 1, 2007. Final stage manufacturers and alterers must comply on and after September 1, 2008. TPMS will be required on passenger cars, multipurpose passenger vehicles, trucks and buses with GVWRs of 4,536 kg (10,000 pounds) or less except those vehicles with dual wheels on an axle. Therefore, most light, motorized RVs will be required to have TPMS. NHTSA does not currently plan further actions to extend TPMS requirements to other vehicle types or weight classes, and notes that such action is outside the scope of this rulemaking.

ADA commented that NHTSA fails to address the situation where weight is added to a vehicle by a dealer so as to affect the GAWR but not necessarily affect the GVWR. It said that the situation can arise in the mobility industry when the dealer installs an outside scooter lift on the rear of the vehicle. While the weight of the scooter and lift do not cause the vehicle to exceed its GVWR, it may cause the GAWR of the rear axle to be exceeded.

As noted earlier, NHTSA recognizes that there are numerous aspects to the overloading problem. Current requirements, as well as the requirements in this final rule do not specifically regulate suspension components or the load on individual axles, rims or tires. This final rule is intended to inform consumers of the load carrying capacity of the RVs that they are purchasing so that after these RVs are in use, consumers can avoid overloading the RVs. We believe that these labeling requirements will improve consumer awareness, purchase decisions and loading practices. Issues concerning overloading of individual axles, rims and tires in order to modify vehicles for persons with disabilities is outside the scope of this rulemaking.

Comments concerning licensing of RV drivers and spot-checks for RVs that are over weight/length, address matters that are outside the scope of this rulemaking.

2. RV Weight and Weighing Issues

Weston commented that individual RVs should actually be weighed to verify the UVW used to design the suspension and that compliance checks by other than the RVIA must occur to guarantee compliance by the industry. Walker commented that the use of generic floor plans to approximate RV weights should be prohibited as there are too many variables that may be overlooked or manipulated. He stated that relying on this method compromises the entire cargo carrying capacity calculation and may not provide the consumer with fair and equal information.

Walker also commented that if a hitch is installed on a motor home, the weight of the hitch, as well as the weight value of the hitch rating should be included in the UVW. He said that otherwise, this important information may be misunderstood or disregarded by consumers.

Walker further commented that RV manufacturers leave a variety of heavy items off of the vehicle until the vehicle has been weighed. He said that the add-ons are installed by a dealer or service facility. Items such as roof air conditioners, awnings, generators, surplus fuel tanks, surplus water tanks, microwave ovens, washer/dryers and dishwashers are installed and not included in the UVW or cargo carrying capacity calculations. Regarding the NPRM proposal that weight added by the dealer or service facility that exceeds 0.5 percent of GVWR be documented on an additional label, Walker commented that this information will not be accurate if prior weight information is not accurate. Walker commented that when weight is added at a dealer or service facility, it should be a requirement that the vehicle be weighed to verify if the chassis has the capacity to handle the additional weight.

The RVDA commented that it would like to see NHTSA develop a consistent set of rules on weighing procedures for RVs.

In the NPRM, NHTSA proposed that the weight values provided by manufacturers be displayed to the nearest kilogram with conversion to the nearest pound, must be measured on scales with a minimum accuracy of plus or minus one percent of the actual value and reflect the weights of the RV as configured for delivery to the dealer/service facility. NHTSA notes that in the July 29, 2005 Joint Petition for Rulemaking and Interim Relief from FMVSS No. 110, it was stated that it was not ''financially possible'' for all affected manufacturers, alterers and modifiers to have scales capable of weighing motor vehicles. However, no information on the extent of the financial burden was provided, especially if methods other than weighing the entire vehicle were used.

The scale requirements proposed in the NPRM were for the purpose of ensuring that the many weight values on the NPRM proposed label were accurate. However, as a result of comments to the NPRM, this final rule only requires manufacturers to report the allowable load carrying capacity. Therefore, in this final rule, in place of requiring scales

with an accuracy of plus or minus one percent of the actual reading, we require the statement: ''The combined weight of occupants and cargo should never exceed XXX kg or XXX lbs'' on motor homes, and the statement: ''The weight of cargo should never exceed XXX kg or XXX lbs'' on RV trailers. These statements are required to state weights that will not overload the vehicle. These requirements allow manufacturers to understate (but not overstate) the weight value for load carrying capacity. This will assure that when the consumer loads the vehicle to the stated load carrying capacity, the GVWR will not be exceeded.

When the manufacturer states that the load carrying capacity must not exceed a certain weight value, it means that the stated load carrying capacity weight value plus the UVW is less than or equal to the GVWR. The manufacturer must consider product variability to ensure that the load carrying capacity plus the UVW does not exceed the GVWR. If, after the RV leaves the manufacturing facility and before first retail sale, additional weight is added whose total exceeds the threshold set by this final rule (the lesser of 1.5 percent of GVWR or 100 pounds), the load carrying capacity information must be corrected by the dealer. The total weight added by the dealer, however, cannot exceed the load carrying capacity weight value initially provided by the vehicle manufacturer.

Regarding Walker's comments which stated that if a hitch is installed on a motor home, the weight of the hitch, as well as the weight value of the hitch rating should be included in the UVW, NHTSA does not favor such a requirement. If a hitch is installed by a manufacturer on any vehicle before final vehicle certification and delivery to the dealer/service facility, the physical weight of the hitch must be included in the vehicle's UVW value. If a hitch is installed by a dealer/service facility on any vehicle after final vehicle certification, the weight of the hitch contributes to the weight of added items installed after final vehicle certification and before first retail sale. When the weight of such items exceeds the threshold set by this final rule (the lesser of 1.5 percent of GVWR or 100 pounds), the load carrying capacity information is corrected by the dealer/service facility.

If the consumer installs a hitch or has a hitch installed after taking delivery of the vehicle, the consumer should subtract the physical weight of the hitch from available load carrying capacity. When the consumer applies tongue weight to any hitch in the form of a towed vehicle or cargo carrier, the consumer must subtract such weight from the available load carrying capacity. The intent of the motor home OCCC label and the RV trailer CCC label on the vehicle is to encourage consumers to determine an accurate value of load carrying capacity according to their particular loading situation.

NHTSA does not favor including fictitious weight in the UVW in anticipation that the consumer will overload the vehicle. Therefore, a consumer whose vehicle is equipped with a hitch, but is not towing a vehicle or using a hitch mounted cargo carrier, will know that additional load carrying capacity is available. An advisory statement on the motor home OCCC label informs consumers that towed vehicle tongue weight is cargo that counts against the total load carrying capacity.

Regarding RVDA's request that NHTSA develop a consistent set of rules or weighing procedures for RVs, NHTSA believes that such information is best left up to manufacturers to provide. Other sources for weighing information can be obtained from organizations such as the Recreation Vehicle Safety Education Foundation and the RVIA.

3. *Numbering in Proposed FMVSS No. 110 Regulatory Text*—Comments from AIAM and the Alliance indicated that the proposed changes to FMVSS No. 110 regulatory text in the NPRM will eliminate the current requirement in S4.3 (a) that relates to vehicle tire placards. Both sought clarification regarding the proposed amendment.

NHTSA agrees with AIAM, and the Alliances' comments. In this final rule the language has been moved to separate sections (S9 and S10) where it won't affect existing tire placard requirements.

4. *Scope of Notice for Joint Petition Issues*—Comments from NTEA asked if the August 31, 2005 NPRM has a broad enough scope to encompass all of the issues presented in the previously submitted Joint Petition [12] that was placed in the docket or whether the issues will be addressed in a supplemental notice of proposed rulemaking (SNPRM). NATM expressed concern that NHTSA will not be able to consider many of the Joint Petition's requested changes as the changes may be out of scope of the present rulemaking. NADA urged NHTSA to consider whether an SNPRM should be issued addressing the concerns expressed in the Joint Petition in order to provide interested parties with the opportunity for notice and comment.

NHTSA originally drafted the cargo carrying capacity NPRM to specifically require load carrying capacity information on a label for heavy RVs. Before the NPRM was published, issues arose regarding the load carrying capacity information required on the tire placard for light vehicles. According to FMVSS No. 110 and as explained in a subsequent interpretation, added weight prior to first retail sale that made the load carrying capacity information on the tire placard inaccurate had the effect of requiring the dealer/service facility adding the weight to replace the tire placard in order to correct the load carrying capacity weight values. This meant that the addition of even small amounts of weight could require re-placarding.

As the Joint Petition issue was related to that NPRM, a proposed solution was drafted and included in the heavy RV cargo carrying capacity NPRM, which proposed but did not require the load carrying capacity information to be corrected when insignificant amounts of weight were added. This solution was proposed for all light vehicles and all heavy RVs.

NHTSA did not propose all of the specific items requested by the Joint Petition; it is, however, providing a further response to the petition in this document.

5. *Response to Issues of the Joint Petition*—The Joint Petition that appears in docket NHTSA–2005–22242–3 raised five basic issues.

The Joint Petition argued that the load carrying capacity statement required by FMVSS No. 110 should allow for a reasonable tolerance in the calculation of the load carrying capacity or not require action unless load carrying capacity is reduced by at least 100 kg (220 pounds). This final rule addresses this issue by adopting a threshold of the lesser of 1.5 percent of GVWR or 100 pounds. While this is lower than the amount requested in the Joint Petition, we believe it addresses the concerns raised in the petition.

Also, in the NPRM we proposed that the unloaded vehicle weight for heavy RVs be determined with scales that have a minimum accuracy of plus or minus one percent of the actual reading.

Since, in this final rule, the label format has changed and manufacturers will only be reporting the weight allotted for passengers and cargo or

[12] ''Joint Petition'' means the ''Joint Petition for Rulemaking and Interim Relief: Federal Motor Vehicle Safety Standard (FMVSS) No. 110; Vehicle Capacity Weight and Tire Information'' dated July 29, 2005 which was submitted to NHTSA by a group of trade organizations through Mike Kastner (NTEA) and Douglas Greenhaus (NADA). The document is available in docket NHTSA–2005–22242–3.

simply cargo in the case of RV trailers, we are requiring that the stated load carrying capacity not overload the vehicle. The GVWR of the vehicle must not be exceeded when the vehicle is loaded with the stated load carrying capacity. Manufacturers are permitted to understate the value of load carrying capacity to compensate for variances in manufacturing techniques, materials, and weighing techniques, however, under no circumstances is an overstated value of load carrying capacity permitted. Any inaccuracies due to scale tolerances and variances in manufacturing techniques or materials must be compensated for by appropriately increasing the safety factor between the allotted weight for occupants and cargo (or just cargo in the case of RV trailers) and the GVWR. Accordingly, the probability of moisture absorption by wooden structures before first retail sale should be considered in assigning the load carrying capacity.

The Joint Petition also requested that the weight value listed on the original tire placard be labeled as ''estimated.'' This request is denied because the load carrying capacity is not merely an estimate. The manufacturer must determine that the vehicle will not exceed GVWR when carrying the ''load carrying capacity'' weight. This final rule requires an accurate determination of load carrying capacity.

As an alternative to the first two issues, the Joint Petition requested that the load carrying capacity be labeled as ''originally manufactured.'' This request is denied because it is not an accurate statement to a purchaser of the vehicle's load carrying capacity. However, the final rule *does* address basic concerns in the context of the first issue of the Joint Petition, regarding a reporting threshold for added weight. Thus, the labeled load carrying capacity reflects both the vehicle as originally manufactured and any reduction in load carrying capacity that occurs beyond a given threshold before the first retail sale. Also, in an interpretation written to John Russell Deane III, Esq. on April 7, 2005, NHTSA stated that regulations do not require changes to the tire safety information placard if the changes to the vehicle occur after it is first sold for purposes other than retail sale.

The Joint Petition also asked for clarification of whether placards/labels may still be modified in lieu of being replaced. This issue is addressed in this final rule. There are three methods available to dealers/service facilities for updating load capacity information:

1. Replacement of original placard/label with a new placard/label with updated information.

2. Modification of original placard/label in order to update information. This must be accomplished with an overlay that maintains the original appearance of the placard/label. The overlay may have blanks where the updated weight values may be legibly printed by hand with a fine point indelible marker.

3. Addition of the Load Carrying Capacity Modification Label within 25 mm of the placard/label being corrected which indicates the amount the load carrying capacity is reduced. The load carrying capacity modification labels may have blank spaces where the value of load carrying capacity reduction may be legibly printed by hand with a fine point indelible marker.

Finally, the Joint Petition asked if any revised cargo capacity weight may be calculated by subtracting total added weight from the stated load capacity weight on the existing tire placard or label. It also asked if the total added weight may be determined by using the supplier's stated shipping weight of the equipment, or its weight as determined by commercially reasonable scales. This issue is addressed in this final rule. Dealers/service facilities may determine total added weight by using any means that result in accurate weights. It is up to the dealers/service facilities to decide how to achieve accurate weights. Since the vehicle manufacturer has certified the vehicle with the stated load capacity weight on the existing tire placard or label as long as the dealers/service facilities have reason to believe the stated weights on the placard or label, it is reasonable for dealers/service facilities to rely on this so long as they have reason to believe the stated weights on the placard or label have not changed.

If the total added weight exceeds the lesser of 1.5 percent GVWR or 100 pounds, the load carrying capacity information must be corrected on the tire placards and RV load carrying capacity labels.

6. The Meaning of ''Stated Weight Ratings'' in FMVSS No. 110

In a November 30, 2005 request for interpretation submitted by all of the Joint Petitioners except the National Trailer Dealers Association, NHTSA was asked to address a series of questions about the Tire Safety Information Rule of November 18, 2002 (67 FR 69600). One question was whether the term ''stated weight ratings'' used in 49 CFR Sections 567.3, 567.6, and 567.7 refers to a vehicle's gross vehicle weight rating as defined in 49 CFR Section 571.3. In a January 22, 2007 interpretation letter responding to that request, NHTSA noted that ''stated weight rating'' is used in both 49 CFR Part 567 and in FMVSS No. 110. We stated that: ''In responding to the petitions for rulemaking, we will address the meaning of this term in Part 567 and FMVSS No. 110, and the interrelationship between these provisions.''

We note that in a final rule of February 14, 2005 (70 FR 7414), Part 567 was reissued. The changes took effect on September 1, 2006. The term ''stated weight ratings'' in Part 567 (particularly in the definition of ''altered vehicle'' at Section 567.3) refer to a vehicle's stated weight ratings, in other words, the Gross Axle Weight Rating (GAWR) and Gross Vehicle Weight Rating (GVWR). The use of the term ''vehicle's stated weight ratings'' is long-standing in Part 567, and was used in Part 567 before the final rule of February, 2005. See also Section 567.7, *Requirements for persons who alter certified vehicles.*

The November 18, 2002 Tire Safety Information Final Rule amending FMVSS No.110 added S4.3.2. *Requirements for altered vehicles.* This paragraph incorporated language from the then-existing version of Section 567.7 *Requirements for persons who alter certified vehicles,* including the term ''stated weight ratings.''

As explained in the preamble, that final rule required alterers, where necessary, to affix a new placard, containing accurate information for the altered vehicle, over the placard installed by the vehicle manufacturer, so as to obscure the original placard. See 67 FR at 69618.

The language of S4.3.2 indicates that it applies to alterers.[13] Not all persons who make changes to certified vehicles prior to first sale are considered alterers. (If someone is an alterer, they have certification responsibilities under Part 567.) The question of whether someone is an alterer is determined under Part 567.

We note, however, that regardless of whether a person (such as a dealer) making changes to a vehicle prior to first sale is considered an alterer, they are subject to other legal requirements. Under 49 U.S.C. 30112, a dealer may not sell vehicles or equipment that do not comply with applicable safety standards. Also, 49 U.S.C. 30122 prohibits dealers, manufacturers, and certain other entities from ''making inoperative, in whole or in part'' any part of a device or element of design installed on or in a motor vehicle in compliance with an applicable motor

[13] Compare the language of S4.3.2 with the definition of ''alterer'' in Part 567.

vehicle safety standard. Accordingly, a dealer would need to correct the tire information placard if, after the dealer installs additional equipment, the required information is no longer accurate.

As discussed earlier, in this final rule, NHTSA is providing regulatory relief related both to the circumstances under which re-labeling is required and the means by which it is done. The new/revised requirements are in FMVSS No. 110, at S10 *Weight added to vehicles between final vehicle certification and first retail sale of the vehicle.* This section is not limited to alterers, i.e., it applies regardless of whether the person adding the weight is considered an alterer.

We are not removing the language of S4.3.2 since it has broader applicability than situations where weight is added. We note, however, that if the addition of weight is the only relevant issue and the situation is addressed by the provisions of S10, alterers need not separately meet 4.3.2. To make this clear, we are adding the phrase ''Except as provided in S10,'' at the beginning of S4.3.2.

7. Issues Outside the Scope of Rulemaking—The purpose of this rulemaking is to provide load carrying capacity information to purchasers of RVs. It also is intended to provide an alternate means to correct load carrying capacity information on all light vehicles and heavy RVs when weight exceeding the lesser of 1.5 percent of GVWR or 100 pounds is added between final vehicle certification and first retail sale. We note that some NPRM comments re-raise old issues related to previous tire placarding rulemakings that are outside the scope of this rulemaking and are not addressed in this final rule.

Additionally, it should be noted that the load carrying capacity labels required by this final rule are intended to inform consumers of the RV's load carrying capacity they are about to purchase and to remind them of the RV's load carrying capacity after purchase and during use. Although knowledge of the RV's load carrying capacity may prevent consumers from exceeding the RV's GVWR, it does not prevent consumers from distributing loads in a fashion that would cause individual tires or components from being overloaded. As various makes/models of RVs each have its own characteristics, it is difficult for consumers to know the correct weight distribution without weighing the loaded vehicle at each individual tire. Manufacturers are urged to provide consumers with as much guidance as possible in the vehicle owner's manual relative to the proper distribution of cargo loads.

V. Final Rule

In this final rule, NHTSA amends 49 CFR 571.3 (Definitions), FMVSS No. 110, and FMVSS No. 120 as described above. We require manufacturers of all motor homes and recreation vehicle (RV) trailers to provide information to consumers in a label that informs the consumer about the vehicle's load carrying capacity. The final rule defines ''recreation vehicle trailer,'' and adds new language that would include weights for water and propane tanks for motor homes and recreation vehicle (RV) trailers. We also require that the size of tires on motor homes and RV trailers be the same as the size of tires listed on the vehicle certification label or tire information label.

For motor homes, we adopt labels that display the VIN, the weight allotted for occupants and cargo, the weight of a full load of water, the unit weight of water and cautionary statements that the weight of water is part of cargo and the tongue weight of a towed trailer counts as cargo. In addition, for motor homes, NHTSA requires that the safety belt equipped seating capacity be included on the label.

For RV trailers, we adopt labels that display the VIN, the weight allotted for cargo, the weight of a full load of water, the unit weight of water and a cautionary statement that the weight of water is part of cargo.

To promote a consistent label location, this final rule specifies that cargo carrying capacity labels be affixed to the interior of the forward-most exterior passenger door on the right side of the vehicle and be visible. As an alternative (due to aesthetic considerations) NHTSA permits manufacturers to place a temporary label to the interior of the forward-most exterior passenger door on the right side of the vehicle and apply a permanent label in the area of the vehicle specified by FMVSS Nos. 110 and 120 for tire information.

In addition, this final rule adopts a threshold for correcting load carrying capacity information of the lesser of 1.5 percent of GVWR or 100 pounds, greatly decreasing the need to correct the information. When the load carrying capacity is increased beyond the lesser of 1.5 percent of GVWR or 100 pounds, between final vehicle certification and the first retail sale, NHTSA permits the use of generic labels where corrected values can be legibly entered using a black, fine point, indelible marker. This permits dealers to stock one generic load carrying capacity modification label.

In this final rule, the addition of the load carrying capacity modification label is one of three options that can be used to correct load carrying capacity information. Dealers/service facilities are permitted to: (1) Replace existing tire placards, motor home OCCC labels or RV trailer CCC labels with new placards/labels containing correct load carrying capacity information; (2) modify existing tire placards, motor home OCCC labels or RV trailer CCC labels so they display correct load carrying capacity information; or (3) add a load carrying capacity modification label within 25 mm of existing tire placard and/or the motor home OCCC label or RV trailer CCC label.

VI. Leadtime

Since we had no public comment on the leadtime issue, the amendments in this final rule take effect, as proposed, 180 days (approximately six months) after the final rule is published. We note that the new labeling requirements in this final rule do not require manufacturers to collect or provide any information other than that already voluntarily provided by motor home and travel trailer manufacturers that are members of the Recreational Vehicle Industry Association.

The provisions in this final rule amending FMVSS No. 110 were made to provide regulatory relief to dealers that may add weight no more than 1.5 percent of gross vehicle weight rating (or 100 pounds if less) after certification of vehicles and before first retail sale of the vehicles. Thus, optional compliance with this final rule is available as of the date this final rule is published in the **Federal Register**.

VII. Regulatory Analyses and Notices

A. Executive Order 12866 and DOT Regulatory Policies and Procedures

Executive Order 12866, ''Regulatory Planning and Review'' (58 FR 51735, October 4, 1993), provides for making determinations whether a regulatory action is ''significant'' and therefore subject to Office of Management and Budget (OMB) review and to the requirements of the Executive Order. The Order defines a ''significant regulatory action'' as one that is likely to result in a rule that may:

(1) Have an annual effect on the economy of $100 million or more or adversely affect in a material way the economy, a sector of the economy, productivity, competition, jobs, the environment, public health or safety, or

State, local, or Tribal governments or communities;

(2) Create a serious inconsistency or otherwise interfere with an action taken or planned by another agency;

(3) Materially alter the budgetary impact of entitlements, grants, user fees, or loan programs or the rights and obligations of recipients thereof; or

(4) Raise novel legal or policy issues arising out of legal mandates, the President's priorities, or the principles set forth in the Executive Order.

We have considered the impact of this rulemaking action under Executive Order 12866 and the Department of Transportation's regulatory policies and procedures. This rulemaking document was not reviewed by the Office of Management and Budget under E.O. 12866, ''Regulatory Planning and Review.'' The rulemaking action is also not considered to be significant under the Department's Regulatory Policies and Procedures (44 FR 11034; February 26, 1979).

For the following reasons, we believe that this final rule will not have any quantifiable cost effect on manufacturers of motor homes or RV trailers. As discussed earlier, the labeling requirements in this rule parallel the labels already required by the Recreational Vehicle Industry Association (RVIA) for RIVA members. Approximately 95 percent of affected motor home and travel trailer manufacturers are RVIA members. Thus, the final rule will have new labeling requirements on only approximately 5 percent of recreational vehicle manufacturers. The RV labels specified in this final rule are simpler, less complex versions of the labels proposed in the NPRM.

In addition, this provides regulatory relief for dealers from an existing labeling requirement in the safety standard on tire selection and rims. Dealers that add items to covered vehicles exceeding the lesser of 100 pounds or 1.5 percent of the vehicles' gross vehicle weight ratings, will be required to disclose this extra weight on labels affixed to the vehicles. No labels are required for the addition of weight that does not exceed the lesser of 1.5 percent of the vehicle's gross vehicle weight rating or 100 pounds.

In its NPRM comments, Toyota stated that NHTSA has not provided a cost benefit analysis regarding load carrying capacity modification labels. NTEA commented that scales are too expensive for every dealership and final stage manufacturer to own.

For light vehicles, the requirements for the tire placard and the load carrying capacity information on the tire placard were established by previous FMVSS No. 110 rulemakings. The load carrying capacity modification label proposed in the August 15, 2005 NPRM was not meant to be a new requirement, but an option that may be used in lieu of replacing or modifying the original tire placard as required by FMVSS No. 110. This option was adopted in this final rule. Dealers/service facilities can choose to replace or modify the tire placard rather than apply the load carrying capacity modification label.

For motor home OCCC labels and RV trailer CCC labels required on RVs, members of the RVIA, which include 95 percent of the RV industry, have displayed cargo carrying capacity information voluntarily for years. This final rule standardizes and makes such information mandatory, and mandates its placement in a prominent location. Also, NHTSA has adopted the RVIA suggestion that the load carrying capacity labeling requirements in the NPRM be extended to all RVs.

As previously stated, dealers/service facilities can use any accurate method for determining the weight of added items. We note that if a dealer/service facility chooses to use a scale, most consumer electronic bathroom scales provide readings from 0 to 350 pounds and can provide repeatable readings within plus or minus one percent of the actual weight. Bathroom scales are inexpensive and would be suitable for weighing smaller items. Dealer/service facilities can also purchase larger commercial scales to weigh larger items, if necessary.

Because the economic impacts of this proposal are so minimal, no separate regulatory evaluation is necessary.

B. Executive Order 13132 (Federalism)

NHTSA has examined today's final rule pursuant to Executive Order 13132 (64 FR 43255, August 10, 1999) and concluded that no additional consultation with States, local governments, or their representatives is mandated beyond the rulemaking process. The agency has concluded that the rule does not have federalism implications, because the rule does not have ''substantial direct effects on the States, on the relationship between the national government and the States, or on the distribution of power and the responsibilities among the various levels of government.''

Further, no consultation is needed to discuss the preemptive effect of today's rule. NHTSA rules can have preemptive effect in at least two ways. First, the National Traffic and Motor Vehicle Safety Act contains an express preemptive provision: ''When a motor vehicle safety standard is in effect under this chapter, a State or a political subdivision of a State may prescribe or continue in effect a standard applicable to the same aspect of performance of a motor vehicle or motor vehicle equipment only if the standard is identical to the standard prescribed under this chapter.'' 49 U.S.C. 30102(b)(1).

In addition to the express preemption noted above, the Supreme Court has also recognized that State requirements imposed on motor vehicle manufacturers, including sanctions imposed by State tort law, can stand as an obstacle to the accomplishment and execution of a NHTSA safety standard. When such a conflict is discerned, the Supremacy Clause of the Constitution makes their State requirements unenforceable. *See Geier* v. *American Honda Motor Co.,* 529 U.S. 861 (2000). NHTSA has not outlined such potential State requirements in today's rulemaking, however, in part because such conflicts can arise in varied contexts, but it is conceivable that such a conflict may become clear through subsequent experience with changes made in today's final rule. NHTSA may opine on such conflicts in the future, if warranted. *See id.* at 883–86.

C. Executive Order 13045 (Economically Significant Rules Affecting Children)

Executive Order 13045 (62 FR 19885, April 23, 1997) applies to any rule that: (1) Is determined to be ''economically significant'' as defined under E.O. 12866, and (2) concerns an environmental, health or safety risk that NHTSA has reason to believe may have a disproportionate effect on children. If the regulatory action meets both criteria, we must evaluate the environmental health or safety effects of the planned rule on children, and explain why the planned regulation is preferable to other potentially effective and reasonably feasible alternatives considered by us.

This rule is not subject to the Executive Order because it is not economically significant as defined in E.O. 12866 and does not involve decisions based on environmental, health or safety risks that disproportionately affect children. This final rule makes changes affecting motor home manufacturers and travel trailer manufacturers. It has a beneficial impact on children traveling in motor homes and recreation vehicle trailers because the new labeling requirements in this final rule provides information to help their parents or guardians keep from overloading the vehicles.

D. Executive Order 12988 (Civil Justice Reform)

With respect to the review of the promulgation of a new regulation, section 3(b) of Executive Order 12988, ''Civil Justice Reform'' (61 FR 4729, February 7, 1996) requires that Executive agencies make every reasonable effort to ensure that the regulation: (1) Clearly specifies the preemptive effect; (2) clearly specifies the effect on existing Federal law or regulation; (3) provides a clear legal standard for affected conduct, while promoting simplification and burden reduction; (4) clearly specifies the retroactive effect, if any; (5) adequately defines key terms; and (6) addresses other important issues affecting clarity and general draftsmanship under any guidelines issued by the Attorney General. This document is consistent with that requirement. Pursuant to this Order, NHTSA notes as follows. The preemptive effect of this rule is discussed above. NHTSA notes further that there is no requirement that individuals submit a petition for reconsideration or pursue other administrative proceeding before they may file suit in court.

E. Regulatory Flexibility Act

Pursuant to the Regulatory Flexibility Act (5 U.S.C. 601 et seq., as amended by the Small Business Regulatory Enforcement Fairness Act (SBREFA) of 1996) whenever an agency is required to publish a notice of rulemaking for any proposed or final rule, it must prepare and make available for public comment a regulatory flexibility analysis that describes the effect of the rule on small entities (i.e., small businesses, small organizations, and small governmental jurisdictions). However, no regulatory flexibility analysis is required if the head of an agency certifies the rule would not have a significant economic impact on a substantial number of small entities. SBREFA amended the Regulatory Flexibility Act to require Federal agencies to provide a statement of the factual basis for certifying that a rule would not have a significant economic impact on a substantial number of small entities.

The Administrator considered the effects of this rulemaking action under the Regulatory Flexibility Act (5 U.S.C. 601 *et seq.*) and certifies that this rule will not have a significant economic impact on a substantial number of small entities. The factual basis for this certification is that this final rule minimally affects small U.S. motor home manufacturers or small U.S. travel trailer manufacturers. The U.S. Small Business Administration's regulations at 13 CFR 121.201 defines a small ''motor home manufacturer'' (NAICS Code 336213) as a ''business entity organized for profit, with a place of business located in the United States, and which operates primarily within the United States or which makes a significant contribution to the U.S. economy through payment of taxes or use of American products, materials or labor.'' (See 13 CFR 121.105) that employs fewer than 1,000 employees. RV trailer and camper manufacturers (NAICS Code 336214) on the other hand, have a size standard of fewer than 500 employees.

NHTSA believes that most RVIA members are small businesses. As earlier discussed, 95 percent of RVIA members are already providing to their customers labeling information that parallel the information specified in this NPRM. The RV labels specified in this final rule are simpler versions of the labels proposed in the NPRM.

F. National Environmental Policy Act

We have analyzed this final rule for the purposes of the National Environmental Policy Act and determined that it would not have any significant impact on the quality of the human environment.

G. Paperwork Reduction Act

Under the Paperwork Reduction Act of 1995, a person is not required to respond to a collection of information by a Federal agency unless the collection displays a valid Office of Management and Budget (OMB) control number. This final rule introduces new information collection requirements in that the new regulation requires certain disclosures to third parties. Information collection under this final rule consists of a load carrying capacity label applied to all motor homes and recreation vehicle (RV) trailers. If the original information is changed, this information collection also requires a load carrying capacity modification label to correct the original load carrying capacity information on all RVs and light vehicles when significant additional weight is added between final vehicle certification and first retail sale.

If the total weight added by dealers/service facilities between final vehicle certification and first retail sale exceeds the lesser of 1.5 percent of GVWR or 100 pounds, the original load carrying capacity information must be corrected. Corrections can be made via the load carrying capacity modification label described in this final rule or by provisions in a previous rulemaking which allows original labels to be corrected by modification or replacement. Our estimates of the burden that this rulemaking imparts on all motor home and RV trailer manufacturers and manufacturers of light vehicles other than motor homes are given below. There is no burden to non-manufacturers or non-dealers.

RV estimates are based on the fact that approximately 95 percent of all RV manufacturers currently belong to RVIA and already voluntarily apply load carrying capacity labels to the vehicles they produce. When this rulemaking becomes a final rule, these 95 percent of RVs will replace the current voluntary label with the NHTSA label at no additional cost. Therefore, any additional cost for information collection imparted by this final rule is a result of the remaining 5 percent of RV manufacturers to apply load carrying capacity labels and the cost to RV dealers/service facilities that choose to apply the load carrying capacity modification label. The cost to manufacturers of light vehicles other than RVs is minimal as most vehicles will not exceed the added-weight threshold and dealers/service facilities will not be required update load carrying capacity information. The additional cost for information collection to light vehicle manufacturers other than RV manufacturers results from those who choose to correct load carrying capacity information by applying the load carrying capacity modification label. The label is not mandatory; it is simply an alternative to correcting load carrying capacity information by replacing or updating the original tire placard/label when the weight threshold is exceeded.

The following are the cost and hour burden estimates resulting from the CCC information requirements in this final rule. Numbers are based on 2005 estimates.

RV manufacturers and manufacturers of light vehicles other than RVs already have the following knowledge, information and resources and therefore these items will not impose any additional costs and/or burden hours.

- Vehicle gross vehicle weight rating (GVWR).
- Means to print or procure labels.
- Scale system for weighing vehicles.

Estimated annual burden hours on the 5 percent of RV manufacturers that are not RVIA members to weigh an RV in order to determine unloaded vehicle weight (UVW)

Estimated burden hours to weigh an RV = .16 hours/RV

Approximately 419,500 RVs shipped in 2005

It is estimated that 5 percent or 20,975 RVs/year currently do not voluntarily

display CCC information as their manufacturers are not members of RVIA.

20,975 RVs/year × 0.16 hours/RV = 3,356 hours/year

Estimated annual cost to the 5 percent of RV manufacturers that are not RVIA members to procure or produce motor home OCCC labels and RV trailer CCC labels

Estimated cost to produce labels = $0.15/ RV

Approximately 419,500 RVs shipped in 2005

It is estimated that 5 percent or 20,975 RVs/year currently do not voluntarily display CCC information as their manufacturers are not members of RVIA.

20,975 RVs/year × $ 0.15/RV = $3,146/year

Estimated annual burden hours on the 5 percent of RV manufacturers that are not RVIA members to install motor home OCCC labels and RV trailer CCC labels

Estimated burden hours to install labels = 0.02 hours/RV

Approximately 419,500 RVs shipped in 2005

It is estimated that 5 percent or 20,975 RVs/year currently do not voluntarily display CCC information as their manufacturers are not members of RVIA.

20,975 RVs/year × 0.02 hours/RV = 420 hours/year

Estimated annual cost to RV manufacturers to procure or produce the load carrying capacity modification labels when necessary

Estimated cost to procure or produce labels = $0.05/RV

Approximately 419,500 RVs shipped in 2005

An estimated 25 percent or 104,875 RVs/year will receive the CCC modification label.

104,875 RVs/year × $0.05/RV = $5,245/year

Estimated annual burden hours on RV manufacturers to install the load carrying capacity modification labels when necessary

Estimated burden hours to install labels = 0.02 hours/RV

Approximately 419,500 RVs shipped in 2005

An estimated 25 percent or 104,875 RVs/year will receive the CCC modification label.

104,875 RVs/year × 0.02 hours/RV = 2,098 hours/year

Estimated annual cost to light vehicle manufacturers to procure or produce the load carrying capacity modification labels when necessary

Estimated cost to procure or produce labels = $0.05/light vehicle

Approximately 17,000,000 light vehicles shipped in 2005

An estimated 1 percent or 170,000 light vehicles/year will receive the CCC modification label.

170,000 light vehicles/year × $0.05/ light vehicle = $8,500/year

Estimated annual burden hours on light vehicle manufacturers to insert values and install the load carrying capacity modification labels when necessary/desired

Estimated burden hours to install labels = 0.02 hours/light vehicle

Approximately 17,000,000 light vehicles shipped in 2005

An estimated 1 percent or 170,000 light vehicles/year will receive the CCC modification label.

170,000 light vehicles/year × 0.02 hours/light vehicle = 3,400 hours/ year

Total estimated burden hours and cost

9274 hours/year

$16,891/year

H. National Technology Transfer and Advancement Act

Section 12(d) of the National Technology Transfer and Advancement Act of 1995 (NTTAA), Public Law 104–113, section 12(d) (15 U.S.C. 272) directs us to use voluntary consensus standards in our regulatory activities unless doing so would be inconsistent with applicable law or otherwise impractical. Voluntary consensus standards are technical standards (e.g., materials specifications, test methods, sampling procedures, and business practices) that are developed or adopted by voluntary consensus standards bodies, such as the Society of Automotive Engineers (SAE). The NTTAA directs us to provide Congress, through OMB, explanations when we decide not to use available and applicable voluntary consensus standards.

After conducting a search of available sources, we have decided to specify labels similar to those used by the Recreational Vehicle Industry Association, advising consumers of cargo carrying capacity for motor homes and travel trailers, and providing advisories.

I. Unfunded Mandates Reform Act

This rule will not impose any unfunded mandates under the Unfunded Mandates Reform Act of 1995. This rule will not result in costs of $100 million or more to either State, local, or tribal governments, in the aggregate, or to the private sector. Thus, this rule is not subject to the requirements of sections 202 and 205 of the UMRA.

J. Plain Language

Executive Order 12866 requires each agency to write all rules in plain language. Application of the principles of plain language includes consideration of the following questions:

—Have we organized the material to suit the public's needs?

—Are the requirements in the rule clearly stated?

—Does the rule contain technical language or jargon that is not clear?

—Would a different format (grouping and order of sections, use of headings, paragraphing) make the rule easier to understand?

—Would more (but shorter) sections be better?

—Could we improve clarity by adding tables, lists, or diagrams?

—What else could we do to make this rulemaking easier to understand?

In response to public comments on the NPRM, in this final rule, NHTSA includes an Appendix A that summarizes the label requirements for various vehicle/GVWR combinations. The scenarios assume use of the load carrying capacity modification label when load carrying capacity information is corrected. This explanation is offered as a Plain Language guide to the various labels and figure numbers. An explanation of the labels applicable to each vehicle type (i.e., light vehicles other than RVs, light RVs, and heavy RVs) is set forth in the appendix.

K. Regulation Identifier Number (RIN)

The Department of Transportation assigns a regulation identifier number (RIN) to each regulatory action listed in the Unified Agenda of Federal Regulations. The Regulatory Information Service Center publishes the Unified Agenda in April and October of each year. You may use the RIN contained in the heading at the beginning of this document to find this action in the Unified Agenda.

List of Subjects in 49 CFR Part 571

Imports, Motor vehicle safety, Motor vehicles, Rubber and rubber products, Tires.

■ In consideration of the foregoing, the Federal Motor Vehicle Safety Standards (49 CFR Part 571), are amended as set forth below.

PART 571—FEDERAL MOTOR VEHICLE SAFETY STANDARDS

■ 1. The authority citation for part 571 continues to read as follows:

Authority: 49 U.S.C. 322, 30111, 30115, 30117, and 30166; delegation of authority at 49 CFR 1.50.

■ 2. Section 571.3 of title 49, Code of Federal Regulations, is amended by revising the definition of ''motor home'' and adding a definition of ''recreation vehicle trailer,'' in the appropriate alphabetical order, to read as follows:

§ 571.3 Definitions.

* * * * *

Motor home means a multi-purpose vehicle with motive power that is designed to provide temporary residential accommodations, as evidenced by the presence of at least four of the following facilities: cooking; refrigeration or ice box; self-contained toilet; heating and/or air conditioning; a potable water supply system including a faucet and a sink; and a separate 110–125 volt electrical power supply and/or propane.

* * * * *

Recreation vehicle trailer means a trailer, except a trailer designed primarily to transport cargo, designed to be drawn by a vehicle with motive power by means of a bumper, frame or fifth wheel hitch and designed to provide temporary residential accommodations, as evidenced by the presence of at least four of the following facilities: cooking; refrigeration or ice box; self-contained toilet; heating and/or air conditioning; a potable water supply system including a faucet and a sink; and a separate 110–125 volt electrical power supply and/or propane. ''Recreation vehicle trailer'' includes trailers used for personal purposes, commonly known as ''sport utility RVs'' or ''toy haulers,'' which usually have spacious rather than incidental living quarters and provide a cargo area for smaller items for personal use such as motorcycles, mountain bikes, all terrain vehicles (ATVs), snowmobiles, canoes or other types of recreational gear.

* * * * *

■ 3. Section 571.110 of title 49, Code of Federal Regulations, is amended by: revising the section heading; by revising S1; by adding to the introductory paragraph of S4.3, ninth and tenth sentences; by revising S4.3.2; by adding to S4.3.5, fifth and sixth sentences; by adding S9 through S9.3.8; and by adding S10 through S10.2 to read as as follows:

§ 571.110 Tire selection and rims and motor home/recreation vehicle trailer load carrying capacity information for motor vehicles with a GVWR of 4,536 kilograms (10,000 pounds) or less.

S1. *Purpose and scope.* This standard specifies requirements for tire selection to prevent tire overloading and for motor home/recreation vehicle trailer load carrying capacity information.

* * * * *

S4.3 *Placard.* * * * If the vehicle is a motor home and is equipped with a propane supply, the weight of full propane tanks must be included in the vehicle's unloaded vehicle weight. If the vehicle is a motor home and is equipped with an on-board potable water supply, the weight of such on-board water must be treated as cargo.

* * * * *

S4.3.2 *Requirements for altered vehicles.* Except as provided in S10, a new placard or placard and label shall be affixed, so as to obscure the original placard, to an altered vehicle that has previously been certified in accordance with § 567.4 or § 567.5, other than by the addition, substitution, or removal of readily attachable components such as mirrors or tire and rim assemblies, or minor finishing operations such as painting, or who alters the vehicle in such a manner that its stated weight ratings are no longer valid, before the first purchase of the vehicle in good faith for purposes other than resale, containing accurate information for the altered vehicle, in accordance with S4.3.

* * * * *

S4.3.5 *Requirements for trailers.* * * * If the vehicle is a recreation vehicle trailer and is equipped with a propane supply, the weight of full propane tanks must be included in the vehicle's unloaded vehicle weight. If the vehicle is a recreation vehicle trailer and is equipped with an on-board potable water supply, the weight of such on-board water must be treated as cargo.

* * * * *

S9. Each motor home and recreation vehicle (RV) trailer must meet the applicable requirements in S9.

S9.1 On motor homes, the sum of the gross axle weight ratings (GAWR) of all axles on the vehicle must not be less than the gross vehicle weight rating (GVWR).

S9.2 On RV trailers, the sum of the GAWRs of all axles on the vehicle plus the vehicle manufacturer's recommended tongue weight must not be less than the GVWR. If tongue weight is specified as a range, the minimum value must be used.

S9.3 Each motor home and RV trailer single stage or final stage manufacturer must affix either a motor home occupant and cargo carrying capacity (OCCC) label (Figure 3) or a RV trailer cargo carrying capacity (CCC) label (Figure 4) to its vehicles that meets the following criteria:

S9.3.1 The RV load carrying capacity labels (Figures 3 and 4) and the RV supplemental labels (Figures 5 and 6) required by S9.3.3(b) must be legible, visible, moisture resistant, presented in the English language, have a minimum print size of 2.4 millimeters (3/32 inches) high and be printed in black print on a yellow background.

S9.3.2 The weight value for load carrying capacity on the RV load carrying capacity labels (Figures 3 and 4) must be displayed to the nearest kilogram with conversion to the nearest pound and must be such that the vehicle does not exceed its GVWR when loaded with the stated load carrying capacity. The UVW and the GVWR used to determine the RV's load carrying capacity must reflect the weights and design of the motor home or RV trailer as configured for delivery to the dealer/service facility. If applicable, the weight of full propane tanks must be included in the RV's UVW and the weight of on-board potable water must be treated as cargo.

S9.3.3 An RV load carrying capacity label (Figures 3 or 4) must be:

(a) Permanently affixed and must be visibly located on the interior of the forward-most exterior passenger door on the right side of the vehicle or; at the option of the manufacturer,

(b) A temporary version of the RV load carrying capacity label (Figures 3 or 4) must be visibly located on the interior of the forward-most exterior passenger door on the right side of the vehicle. A permanent motor home or RV trailer supplemental label (Figures 5 or 6) must be permanently affixed within 25 millimeters of the placard specified in S4.3 for motor homes and S4.3.5 for RV trailers.

S9.3.4 Permanent and temporary motor home OCCC labels must contain the following information in accordance with Figure 3:

(a) The statement: ''MOTOR HOME OCCUPANT AND CARGO CARRYING CAPACITY'' in block letters.

(b) The Vehicle Identification Number (VIN).

(c) The statement ''THE COMBINED WEIGHT OF OCCUPANTS AND CARGO SHOULD NEVER EXCEED: XXX kg or XXX lbs'' in block letters with appropriate values included.

(d) The statement ''Safety belt equipped seating capacity: XXX'' with the appropriate value included. This is

the total number of safety belt equipped seating positions.

(e) The statement ''CAUTION: A full load of water equals XXX kg or XXX lbs of cargo @ 1 kg/L (8.3 lb/gal) and the tongue weight of a towed trailer counts as cargo'' with appropriate values included.

S9.3.5 Permanent and temporary RV trailer CCC labels must contain the following information in accordance with Figure 4:

(a) The statement: ''RECREATION VEHICLE TRAILER CARGO CARRYING CAPACITY'' in block letters.

(b) The Vehicle Identification Number (VIN).

(c) The statement ''THE WEIGHT OF CARGO SHOULD NEVER EXCEED: XXX kg or XXX lbs'' in block letters with appropriate values included.

(d) The statement ''CAUTION: A full load of water equals XXX kg or XXX lbs of cargo @ 1 kg/L (8.3 lb/gal)'' with appropriate values included.

S9.3.6 For RVs, the vehicle capacity weight values and the seating capacity values (motor homes only) on the placard required by S4.3 or S4.3.5 must agree with the load carrying capacity weight values and the safety belt equipped seating capacity (motor homes only) on the RV load carrying capacity labels (Figures 3 and 4).

S9.3.7 The permanent motor home supplemental label must contain the following information in accordance with Figure 5:

(a) The statement ''CAUTION: A full load of water equals XXX kg or XXX lbs of cargo @ 1 kg/L (8.3 lb/gal) and the tongue weight of a towed trailer counts as cargo'' with appropriate values included.

S9.3.8 The permanent RV trailer supplemental label must contain the following information in accordance with Figure 6:

(a) The statement ''CAUTION: A full load of water equals XXX kg or XXX lbs of cargo @ 1 kg/L (8.3 lb/gal)'' with appropriate values included.

S10. *Weight added to vehicles between final vehicle certification and first retail sale of the vehicle.*

S10.1 If weight exceeding the lesser of 1.5 percent of GVWR or 45.4 kg (100 pounds) is added to a vehicle between final vehicle certification and first retail sale of the vehicle, the vehicle capacity weight values on the placard required by S4.3 or S4.3.5 and the load carrying capacity weight values on the RV load carrying capacity labels (Figures 3 and 4) required by S9.3 must be corrected using one or a combination of the following methods:

(a) Permanently affix load carrying capacity modification labels (Figure 7), which display the amount the load carrying capacity is reduced to the nearest kilogram with conversion to the nearest pound, within 25 millimeters of the original, permanent RV load carrying capacity label (Figure 3 or 4) and the original placard (Figure 1). The load carrying capacity modification labels must be legible, visible, permanent, moisture resistant, presented in the English language, have a minimum print size of 2.4 millimeters (3/32 inches) high and be printed in black print on a yellow background, or

(b) If the manufacturer selects S9.3.3(b), apply a temporary version of the load carrying capacity modification label (Figure 7) within 25 millimeters of the original, temporary RV load carrying capacity label (Figure 3 or 4) on the interior of the forward-most exterior passenger door on the right side of the vehicle, in addition to applying a permanent version of the same label within 25 mm of the placard required by S4.3 or S4.3.5. Both temporary and permanent versions of the load carrying capacity modification label (Figure 7) may be printed without values and values may be legibly applied to the label with a black, fine point, indelible marker. The label must contain the statements ''CAUTION—LOAD CARRYING CAPACITY REDUCED'' in block letters and ''Modifications to this vehicle have reduced the original load carrying capacity by XXX kg or XXX lbs'' in accordance with Figure 7. If two load carrying capacity modification labels are required (one permanent and one temporary), the weight values on each must agree, or

(c) Modify the original, permanent RV load carrying capacity labels (Figures 3 and 4) and the placard (Figure 1) with correct vehicle capacity weight values. If the manufacturer selects S9.3.3(b), the temporary RV load carrying capacity labels (Figures 3 and 4) must also be modified with correct vehicle capacity weight values. Modification of labels requires a machine printed overlay with printed corrected values or blanks for corrected values that may be entered with a black, fine-point, indelible marker. Crossing out old values and entering corrected values on the original label is not permissible, or

(d) Replace the original, permanent RV load carrying capacity labels (Figures 3 and 4) and the placard (Figure 1) with the same labels/placard containing correct vehicle capacity weight values. If the manufacturer selects S9.3.3(b), the temporary RV load carrying capacity labels (Figures 3 and 4) must also be replaced with the same labels containing correct vehicle capacity weight values.

S10.2 Corrected load carrying capacity weight values or the weight amount the load carrying capacity is reduced, must reflect the total weight added between final vehicle certification and first retail sale and must be accurate within one percent of the actual added weight. No action is required if the weight of the vehicle is reduced between final vehicle certification and first retail sale.

§ 571.110 [Amended]

■ 4. Section 571.110 of title 49, Code of Federal Regulations, is amended by adding, after S10, Figure 3, Figure 4, Figure 5, Figure 6, and Figure 7 to read as follows:

BILLING CODE 4910–59–P

MOTOR HOME OCCUPANT AND CARGO CARRYING CAPACITY
VIN: ##################
THE COMBINED WEIGHT OF OCCUPANTS AND CARGO SHOULD NEVER EXCEED:
XXX kg or XXX lbs
Safety belt equipped seating capacity: XXX
CAUTION:
A full load of water equals XXX kg or XXX lbs of cargo @ 1 kg/L (8.3 lb/gal) and the tongue weight of a towed trailer counts as cargo

Figure 3 - Motor Home Occupant and Cargo Carrying Capacity Label

RECREATION VEHICLE TRAILER CARGO CARRYING CAPACITY
VIN: ##################
THE WEIGHT OF CARGO SHOULD NEVER EXCEED:
XXX kg or XXX lbs
CAUTION:
A full load of water equals XXX kg or XXX lbs of cargo @ 1 kg/L (8.3 lb/gal)

Figure 4 - RV Trailer Cargo Carrying Capacity Label

CAUTION:
A full load of water equals XXX kg or XXX lbs of cargo @ 1 kg/L (8.3 lb/gal) and the tongue weight of a towed trailer counts as cargo

Figure 5 - Motor Home Supplemental Label

CAUTION:
A full load of water equals XXX kg or XXX lbs of cargo @ 1 kg/L (8.3 lb/gal)

Figure 6 - RV Trailer Supplemental Label

CAUTION: LOAD CARRYING CAPACITY REDUCED
Modifications to this vehicle have reduced the original load carrying capacity by _____kg or _____lbs

Figure 7 - Load Carrying Capacity Modification Label

BILLING CODE 4910–59–C

■ 5. Section 571.120 of title 49, Code of Federal Regulations, is amended by revising the section heading, by revising S1, by revising S2, and by adding S10 through S10.5.2 to read as follows:

§ 571.120 Tire selection and rims and motor home/recreation vehicle trailer load carrying capacity information for motor vehicles with a GVWR of more than 4,536 kilograms (10,000 pounds).

S1. *Scope.* This standard specifies tire and rim selection requirements, rim marking requirements and motor home/recreation vehicle trailer load carrying capacity information.

S2. *Purpose.* The purpose of this standard is to provide safe operational performance by ensuring that vehicles to which it applies are equipped with tires of adequate size and load rating and with rims of appropriate size and type designation, and by ensuring that consumers are informed of motor home/recreation vehicle trailer load carrying capacity.

* * * * *

S10. Each motor home and recreation vehicle (RV) trailer must meet the applicable requirements in S10.

S10.1 On motor homes, the sum of the gross axle weight ratings (GAWR) of all axles on the vehicle must not be less than the gross vehicle weight rating (GVWR).

S10.2 On RV trailers, the sum of the GAWRs of all axles on the vehicle plus the vehicle manufacturer's recommended tongue weight must not be less than the GVWR. If tongue weight is specified as a range, the minimum value must be used.

S10.3 The tires on each motor home and RV trailer at first retail sale must be the same size as the tire size on the labeling required by S5.3.

S10.4 Each motor home and RV trailer single stage or final stage manufacturer must affix either a motor home occupant and cargo carrying capacity (OCCC) label (Figure 1) or a RV trailer cargo carrying capacity (CCC) label (Figure 2) to its vehicles that meets the following criteria:

S10.4.1 The RV load carrying capacity labels (Figures 1 and 2) must be legible, visible, moisture resistant, presented in the English language, have a minimum print size of 2.4 millimeters (3/32 inches) high and be printed in black print on a yellow background.

S10.4.2 The weight value for load carrying capacity on the RV load carrying capacity labels (Figures 1 and 2) must be displayed to the nearest kilogram with conversion to the nearest

pound and must be such that the vehicle's weight does not exceed its GVWR when loaded with the stated load carrying capacity. The UVW and the GVWR used to determine the RV's load carrying capacity must reflect the weights and design of the motor home or RV trailer as configured for delivery to the dealer/service facility. If applicable, the weight of full propane tanks must be included in the RV's UVW and the weight of on-board potable water must be treated as cargo.

S10.4.3 The RV load carrying capacity labels (Figures 1 and 2) must be:

(a) Permanently affixed and must be visibly located on the interior of the forward-most exterior passenger door on the right side of the vehicle; or

(b) If a permanent RV load carrying capacity label (Figure 1 or 2) is affixed in the location specified at S5.3(b), a temporary version of the RV load carrying capacity label (Figure 1 or 2) may be visibly located on the interior of the forward-most exterior passenger door on the right side of the vehicle.

S10.4.4 Permanent and temporary motor home OCCC labels must contain the following information in accordance with Figure 1:

(a) The statement: ''MOTOR HOME OCCUPANT AND CARGO CARRYING CAPACITY'' in block letters.

(b) The Vehicle Identification Number (VIN).

(c) The statement ''THE COMBINED WEIGHT OF OCCUPANTS AND CARGO SHOULD NEVER EXCEED: XXX kg or XXX lbs'' in block letters with appropriate values included.

(d) The statement ''Safety belt equipped seating capacity: XXX'' with the appropriate value included. This is the total number of safety belt equipped seating positions.

(e) The statement: ''CAUTION: A full load of water equals XXX kg or XXX lbs of cargo @ 1 kg/L (8.3 lb/gal) and the tongue weight of a towed trailer counts as cargo'' with appropriate values included.

S10.4.5 Permanent and temporary RV trailer CCC labels must contain the following information in accordance with Figure 2:

(a) The statement: ''RECREATION VEHICLE TRAILER CARGO CARRYING CAPACITY'' in block letters.

(b) The Vehicle Identification Number (VIN).

(c) The statement: ''THE WEIGHT OF CARGO SHOULD NEVER EXCEED: XXX kg or XXX lbs'' in block letters with appropriate values included.

(d) The statement: ''CAUTION: A full load of water equals XXX kg or XXX lbs of cargo @ 1 kg/L (8.3 lb/gal)'' with appropriate values included.

S10.5 *Weight added to motor homes and RV trailers between final vehicle certification and first retail sale of the vehicle.*

S10.5.1 If weight exceeding 45.4 kg (100 pounds) is added to a motor home or RV trailer between final vehicle certification and first retail sale of the vehicle, the load carrying capacity values on the RV load carrying capacity labels (Figures 1 and 2) required by S10.4 must be corrected using one or a combination of the following methods:

(a) Permanently affix the load carrying capacity modification label (Figure 3) which displays the amount the load carrying capacity is reduced to the nearest kilogram with conversion to the nearest pound, within 25 millimeters of the original, permanent RV load carrying capacity label (Figure 1 or 2). The load carrying capacity modification label must be legible, visible, permanent, moisture resistant, presented in the English language, have a minimum print size of 2.4 millimeters (3/32 inches) high and be printed in black print on a yellow background. If the manufacturer selects S10.4.3(b), apply a temporary version of the load carrying capacity modification label (Figure 3) within 25 millimeters of the original, temporary RV load carrying capacity label (Figure 1 or 2) on the interior of the forward-most exterior passenger door on the right side of the vehicle. Both temporary and permanent versions of the load carrying capacity modification label (Figure 3) may be printed without values and values may be legibly applied to the label with a black, fine point, indelible marker. The label must contain the statements ''CAUTION—LOAD CARRYING CAPACITY REDUCED'' in block letters and ''Modifications to this vehicle have reduced the original load carrying capacity by XXX kg or XXX lbs'' in accordance with Figure 3 with appropriate values in place of XXX. If two load carrying capacity modification labels are required (one permanent and one temporary), the weight values on each must agree, or

(b) Modify the original permanent RV load carrying capacity label (Figure 1 or 2) with correct load carrying capacity weight values. If the manufacturer selects S10.4.3(b), the temporary RV load carrying capacity label (Figure 1 or 2) must also be modified with correct load carrying capacity weight values. Modification of labels requires a machine printed overlay with printed corrected values or blanks for corrected values that may be entered with a black, fine-point, indelible marker. Crossing out old values and entering corrected values on the original label is not permissible, or

(c) Replace the original, permanent RV load carrying capacity label (Figure 1 or 2) with the same label containing correct load carrying capacity weight values. If the manufacturer selects S10.4.3(b), the temporary RV load carrying capacity label (Figure 1 or 2) must also be replaced with the same label containing correct load carrying capacity weight values.

S10.5.2 Corrected load carrying capacity weight values or the weight amount the load carrying capacity is reduced, must reflect the total weight added between final vehicle certification and first retail sale and must be accurate within one percent of the actual added weight. No re-labeling is required if the weight of the vehicle is reduced between final vehicle certification and the first retail sale.

6. Section 571.120 of title 49, Code of Federal Regulations, is amended by adding, after S10, Figure 1, Figure 2, and Figure 3 to read as follows:

MOTOR HOME OCCUPANT AND CARGO CARRYING CAPACITY
VIN: ##################
THE COMBINED WEIGHT OF OCCUPANTS AND CARGO SHOULD NEVER EXCEED:
XXX kg or XXX lbs
Safety belt equipped seating capacity: XXX
CAUTION:
A full load of water equals XXX kg or XXX lbs of cargo @ 1 kg/L (8.3 lb/gal) and the tongue weight of a towed trailer counts as cargo

Figure 1 - Motor Home Occupant and Cargo Carrying Capacity Label

RECREATION VEHICLE TRAILER CARGO CARRYING CAPACITY
VIN: ##################
THE WEIGHT OF CARGO SHOULD NEVER EXCEED:
XXX kg or XXX lbs
CAUTION:
A full load of water equals XXX kg or XXX lbs of cargo @ 1 kg/L (8.3 lb/gal)

Figure 2 - RV Trailer Cargo Carrying Capacity Label

CAUTION: LOAD CARRYING CAPACITY REDUCED
Modifications to this vehicle have reduced the original load carrying capacity by _____ kg or _____lbs

Figure 3 - Load Carrying Capacity Modification Label

Note: This appendix will not appear in the Code of Federal Regulations.

Appendix A—Label Requirements for Various Vehicle/GVWR Combinations

The following scenarios summarize the label requirements for various vehicle/GVWR combinations.

Note: This explanation is offered as a guide to the various labels and figure numbers. An explanation of the labels applicable to each vehicle type (i.e., light vehicles other than RVs, light RVs, and heavy RVs) is set forth below.

Except for the motor home and RV trailer supplemental labels in the amendment to FMVSS No. 110 (Figures 5 and 6), light RVs and heavy RVs use the same motor home OCCC label and the same RV trailer CCC labels. Also both light and heavy RVs use the same load carrying capacity modification label. As light vehicles are addressed by FMVSS No. 110 and heavy vehicles are addressed by FMVSS No. 120, regulatory text and figures containing labels had to be placed in each of the two standards. FMVSS No. 110 already contained two figures; therefore the new labels begin with Figure 3. FMVSS No. 120 had no existing figures; therefore the new labels begin with Figure 1. For example:

- The motor home OCCC label in FMVSS No. 110, Figure 3 is the same as the motor home OCCC label in FMVSS No. 120, Figure 1.
- The RV trailer CCC label in FMVSS No. 110, Figure 4 is the same as the RV trailer CCC label in FMVSS No. 120, Figure 2.
- The load carrying capacity modification label FMVSS No. 110, Figure 7 is the same as the load carrying capacity modification label in FMVSS No. 120, Figure 3.

Figure numbers in the following scenarios refer to the figures in the regulatory text for the amendments to FMVSS Nos. 110 and 120.

Light Vehicles Other Than RVs

- If weight added after final vehicle certification and before first retail sale exceeds the lesser of 1.5 percent of GVWR or 100 pounds, then
  - ○ Correct the load carrying capacity information by modifying or replacing the FMVSS No. 110 tire placard, or
  - ○ Install the load carrying capacity modification label (amendment to Standard No. 110, Figure 7) within 25 mm of the FMVSS No. 110 tire placard showing the amount the load carrying capacity is reduced.

Light RVs

- Option 1—Install a permanent motor home OCCC label or RV trailer CCC label (amendment to Standard No. 110, Figure 3 or 4) visibly on the interior of the forward-most exterior passenger door on the right side of the vehicle.
  - ○ If weight added after final vehicle certification and before first retail sale exceeds the lesser of 1.5 percent of GVWR or 100 pounds, then
    - ■ Correct the load carrying capacity information by modifying or replacing the FMVSS No. 110 tire placard and the permanent motor home OCCC label or RV trailer CCC label, or
    - ■ Install permanent load carrying capacity modification labels (amendment to Standard No. 110, Figure 7) within 25 mm of the FMVSS No. 110 tire placard and within 25 mm of the permanent motor home OCCC label or RV trailer CCC label showing the amount the load carrying capacity is reduced (two load carrying capacity modification labels are required because on a light RV, load carrying capacity information appears on both the tire placard and the motor home OCCC label or RV trailer CCC label).
- Option 2—Install a temporary version of the motor home OCCC label or RV trailer CCC label (amendment to Standard No. 110, Figure 3 or 4) visibly on the interior of the forward-most exterior passenger door on the right side of the vehicle and install a permanent motor home or RV trailer supplemental label (amendment to Standard No. 110, Figure 5 or 6) within 25 mm of the FMVSS No. 110 tire placard (motor home and RV trailer supplemental labels do not duplicate information that already exists on the tire placard).
  - ○ If weight added after final vehicle certification and before first retail sale exceeds the lesser of 1.5 percent of GVWR or 100 pounds, then
    - ■ Correct the load carrying capacity information by modifying or replacing the tire placard and the temporary version of the motor home OCCC label or RV trailer CCC label, or
    - ■ Install a permanent load carrying capacity modification label (amendment to Standard No. 110, Figure 7) within 25 mm of the tire placard and install a temporary version of the load carrying capacity modification label (amendment to Standard No. 110, Figure 7) within 25 mm of the temporary version of the motor home OCCC label or RV trailer CCC label in the specified location. The permanent and temporary version of the load carrying capacity modification label will display the amount the load carrying capacity is reduced. This scenario would have both the supplemental label (Figure 5 or 6) and the permanent load carrying capacity modification label (Figure 7) installed within 25 mm of the placard (Figure 1).

Heavy RVs

• Option 1—Install a permanent motor home OCCC label or RV trailer CCC label (amendment to Standard No. 120, Figure 1 or 2) visibly on the interior of the forward-most exterior passenger door on the right side of the vehicle.

○ If weight added after final vehicle certification and before first retail sale exceeds 100 pounds, then

■ Correct the load carrying capacity information by modifying or replacing the permanent motor home OCCC label or RV trailer CCC label, or

■ Install a permanent load carrying capacity modification label (amendment to Standard No. 120, Figure 3) within 25 mm of the permanent motor home OCCC label or RV trailer CCC label showing the amount the load carrying capacity is reduced.

• Option 2—Install a temporary version of the motor home OCCC label or RV trailer CCC label (amendment to Standard No. 120, Figure 1 or 2) visibly on the interior of the forward-most exterior passenger door on the right side of the vehicle and install a permanent motor home OCCC label or RV trailer CCC label in the area specified for tire information by FMVSS No. 120.[14]

○ If weight added after final vehicle certification and before first retail sale exceeds 100 pounds, then

■ Correct the load carrying capacity information by modifying or replacing both the permanent and temporary motor home OCCC labels or RV trailer CCC labels, or

■ Install a permanent load carrying capacity modification label (amendment to Standard No. 120, Figure 3) within 25 mm of the permanent motor home OCCC label or RV trailer CCC label and install a temporary version of the load carrying capacity modification label (amendment to Standard No. 120, Figure 3) within 25 mm of the temporary motor home OCCC label or RV trailer CCC label showing the amount the load carrying capacity is reduced.

Issued on: November 20, 2007.

Nicole R. Nason,

Administrator.

[FR Doc. E7–22962 Filed 12–3–07; 8:45 am]

BILLING CODE 4910–59–P

[14] FMVSS No. 120, S5.3(a) provides the option of including tire information on the certification label required by 49 CFR § 567.4 or § 567.5. FMVSS No. 120, S5.3(b) provides the option of including the tire information on a tire information label affixed to the vehicle in the manner, location and form described in § 567.4(b) through (f). Note that § 567(d) applies only to trailers.

Federal Register

Tuesday,
December 4, 2007

Part IV

The President

Proclamation 8208—National Drunk and Drugged Driving Prevention Month, 2007

Federal Register
Vol. 72, No. 232
Tuesday, December 4, 2007

Presidential Documents

Title 3—

The President

Proclamation 8208 of November 30, 2007

National Drunk and Drugged Driving Prevention Month, 2007

By the President of the United States of America

A Proclamation

Accidents related to drunk and drugged driving claim the lives of thousands of Americans every year. During National Drunk and Drugged Driving Prevention Month we seek to raise awareness about the dangers of driving under the influence of alcohol or drugs and encourage citizens to drive responsibly.

As a Nation, we must work together to prevent drunk and drugged driving on our roads. We can all play an important role by educating family members and friends about the devastating consequences of impaired driving and by insisting that they have a designated driver. Businesses, community organizations, and faith-based groups can promote substance abuse prevention and encourage alternative sources of transportation. By encouraging our fellow citizens to make responsible choices, we can help save lives.

My Administration is dedicated to strengthening efforts against drunk and drugged driving. We have partnered with communities across America to increase public awareness about this serious crime and prevent impaired drivers from putting themselves and others at risk. Through high-visibility enforcement operations, the Department of Transportation's National Highway Traffic Safety Administration is helping discourage individuals from drinking and driving. To take drug-impaired drivers off the streets, the Office of National Drug Control Policy is working to give law enforcement officers the tools they need to detect when citizens are driving under the influence of drugs.

During National Drunk and Drugged Driving Prevention Month and throughout the year, we are reminded of the importance of driving free from the influence of alcohol and drugs. By working together, we can make our Nation's roadways safer for everyone.

NOW, THEREFORE, I, GEORGE W. BUSH, President of the United States of America, by virtue of the authority vested in me by the Constitution and laws of the United States, do hereby proclaim December 2007 as National Drunk and Drugged Driving Prevention Month. I urge all Americans to make responsible decisions and take appropriate measures to prevent drunk and drugged driving.

IN WITNESS WHEREOF, I have hereunto set my hand this thirtieth day of November, in the year of our Lord two thousand seven, and of the Independence of the United States of America the two hundred and thirty-second.

[FR Doc. 07–5951
Filed 12–3–07; 11:08 am]
Billing code 3195–01–P

Reader Aids

Federal Register

Vol. 72, No. 232

Tuesday, December 4, 2007

CUSTOMER SERVICE AND INFORMATION

Federal Register/Code of Federal Regulations	
General Information, indexes and other finding aids	**202–741–6000**
Laws	**741–6000**
Presidential Documents	
Executive orders and proclamations	**741–6000**
The United States Government Manual	**741–6000**
Other Services	
Electronic and on-line services (voice)	**741–6020**
Privacy Act Compilation	**741–6064**
Public Laws Update Service (numbers, dates, etc.)	**741–6043**
TTY for the deaf-and-hard-of-hearing	**741–6086**

ELECTRONIC RESEARCH

World Wide Web

Full text of the daily Federal Register, CFR and other publications is located at: **http://www.gpoaccess.gov/nara/index.html**

Federal Register information and research tools, including Public Inspection List, indexes, and links to GPO Access are located at: **http://www.archives.gov/federal_register**

E-mail

FEDREGTOC-L (Federal Register Table of Contents LISTSERV) is an open e-mail service that provides subscribers with a digital form of the Federal Register Table of Contents. The digital form of the Federal Register Table of Contents includes HTML and PDF links to the full text of each document.

To join or leave, go to **http://listserv.access.gpo.gov** and select *Online mailing list archives, FEDREGTOC-L, Join or leave the list (or change settings);* then follow the instructions.

PENS (Public Law Electronic Notification Service) is an e-mail service that notifies subscribers of recently enacted laws.

To subscribe, go to **http://listserv.gsa.gov/archives/publaws-l.html** and select *Join or leave the list (or change settings);* then follow the instructions.

FEDREGTOC-L and **PENS** are mailing lists only. We cannot respond to specific inquiries.

Reference questions. Send questions and comments about the Federal Register system to: **fedreg.info@nara.gov**

The Federal Register staff cannot interpret specific documents or regulations.

FEDERAL REGISTER PAGES AND DATE, DECEMBER

67831–68040 3
68041–68470 4

CFR PARTS AFFECTED DURING DECEMBER

At the end of each month, the Office of the Federal Register publishes separately a List of CFR Sections Affected (LSA), which lists parts and sections affected by documents published since the revision date of each title.

3 CFR

Proclamations:
8207 68041
8208 68469

5 CFR

530 67831
575 67831

10 CFR

Ch. 1 68043
19 68043
20 68043
50 68043

12 CFR

620 68060

14 CFR

39 ..... 67841, 67843, 67845, 67847
97 68062

Proposed Rules:
39 ..... 67864, 67866, 67868, 67870, 67873, 67998, 68106, 68108

18 CFR

Proposed Rules:
410 67875

21 CFR

210 68064
211 68064
1300 67850

Proposed Rules:
210 ..... 68111, 68113
211 ..... 68111, 68113

26 CFR

Proposed Rules:
1 67878

30 CFR

701 68000
773 68000
774 68000
778 68000
843 68000
847 68000

31 CFR

351 67853
353 67853
359 67853
360 67853
363 67853

33 CFR

Proposed Rules:
117 68118

38 CFR

17 68070

40 CFR

52 ..... 67854, 68072
300 68075

Proposed Rules:
52 ..... 67878, 68118, 68119

42 CFR

411 68075
424 68075
431 68077
440 68077
441 68077

47 CFR

54 67858
73 67859

Proposed Rules:
73 67880

49 CFR

564 68234
571 ..... 68234, 68442

50 CFR

229 ..... 67859, 67861
300 68093
648 ..... 68095, 68096
660 68097

REMINDERS

The items in this list were editorially compiled as an aid to Federal Register users. Inclusion or exclusion from this list has no legal significance.

RULES GOING INTO EFFECT DECEMBER 4, 2007

COMMERCE DEPARTMENT

National Oceanic and Atmospheric Administration

Fishery conservation and management:
- Northeastern United States fisheries—
  - Atlantic hagfish; published 12-4-07
  - Summer flounder; published 12-4-07
- West Coast States and Western Pacific fisheries—
  - Pacific Coast groundfish; published 12-4-07

ENVIRONMENTAL PROTECTION AGENCY

Air quality implementation plans; approval and promulgation; various States:
- North Carolina; published 10-5-07
- Pennsylvania; published 10-5-07

Superfund program:
- National oil and hazardous substances contingency plan priorities list
  - Correction; published 12-4-07

HEALTH AND HUMAN SERVICES DEPARTMENT

Centers for Medicare & Medicaid Services

Medicare:
- Physicians' referrals to health care entities with which they have financial relationships (Phase III)
  - Correction; published 12-4-07
- Physicians referrals to health care entities with which they have financial relationships (Phase III); published 9-5-07

TRANSPORTATION DEPARTMENT

Federal Aviation Administration

Airworthiness directives:
- Cirrus Design Corp.; published 11-29-07

Standard instrument approach procedures; published 12-4-07

COMMENTS DUE NEXT WEEK

COMMERCE DEPARTMENT

National Oceanic and Atmospheric Administration

Fishery conservation and management:
- Alaska; fisheries of Exclusive Economic Zone—
  - Pacific halibut and sablefish; comments due by 12-14-07; published 11-14-07 [FR E7-22237]
- Northeastern United States fisheries—
  - Northeast multispecies; comments due by 12-14-07; published 11-14-07 [FR E7-22240]

Marine mammals:
- Scientific research and enhancement activities—
  - Permits; issuance criteria; comments due by 12-13-07; published 10-15-07 [FR E7-20229]
- Sea turtle conservation—
  - Chain-mat modified gear and sea scallop dredge gear; incidental take in compliance with gear modification requirements; comments due by 12-10-07; published 11-9-07 [FR E7-22073]

ENVIRONMENTAL PROTECTION AGENCY

Air programs:
- Stratospheric ozone protection—
  - Refrigerant recovery and recycling equipment standards; comments due by 12-10-07; published 11-9-07 [FR E7-21941]
  - Refrigerant recovery and recyling equipment standards; comments due by 12-10-07; published 11-9-07 [FR E7-21943]

Pesticides; tolerances in food, animal feeds, and raw agricultural commodities:
- Furilazole; comments due by 12-10-07; published 10-10-07 [FR E7-19829]
- Spinetoram; comments due by 12-10-07; published 10-10-07 [FR E7-19947]

Water programs:
- Oil pollution prevention; spill prevention, control, and countermeasure rule requirements; comments due by 12-14-07; published 10-15-07 [FR E7-19701]

FEDERAL COMMUNICATIONS COMMISSION

Radio services, special:
- Advanced wireless services in 2155-2175 MHz band; service rules; comments due by 12-14-07; published 11-14-07 [FR 07-05632]

Radio stations; table of assignments:
- Arizona; comments due by 12-10-07; published 11-13-07 [FR E7-22119]
- California; comments due by 12-10-07; published 11-13-07 [FR E7-22120]
- Oklahoma; comments due by 12-10-07; published 11-13-07 [FR E7-22123]

FEDERAL RESERVE SYSTEM

Prohibition on funding of unlawful Internet gambling (Regulation GG):
- Unlawful Internet Gambling Act of 2006; implementation; comments due by 12-12-07; published 10-4-07 [FR 07-04914]

HOMELAND SECURITY DEPARTMENT

Coast Guard

Anchorage regulations:
- California; comments due by 12-10-07; published 10-11-07 [FR E7-19995]

Meetings:
- Bellaire Bridge, Bellaire, OH; public hearing; comments due by 12-12-07; published 11-15-07 [FR E7-22351]

Regattas and marine parades:
- Seventh Coast Guard District; recurring marine events; comments due by 12-13-07; published 11-13-07 [FR E7-21714]

HOUSING AND URBAN DEVELOPMENT DEPARTMENT

HUD program requirements; waivers:
- Pet ownership for the elderly and persons with disabilities; comments due by 12-14-07; published 10-15-07 [FR E7-20196]

INTERIOR DEPARTMENT

Fish and Wildlife Service

Endangered and threatened species:
- Critical habitat designations—
  - Peninsular bighorn sheep; comments due by 12-10-07; published 10-10-07 [FR 07-04959]
- Findings on petitions, etc.—
  - Black-footed albatross; comments due by 12-10-07; published 10-9-07 [FR E7-19690]

Migratory bird hunting:
- Alaska; 2008 subsistence harvest regulations; comments due by 12-14-07; published 10-15-07 [FR E7-20243]

LABOR DEPARTMENT

Occupational Safety and Health Administration

Occupational safety and health standards:
- Emergency response and preparedness; comprehensive standard; information request; comments due by 12-10-07; published 9-11-07 [FR E7-17771]

LIBRARY OF CONGRESS

Copyright Royalty Board, Library of Congress

Statutory licenses; rates and terms:
- Digital performance right in sound recordings and ephemeral recordings for new subscription service; comments due by 12-10-07; published 11-9-07 [FR E7-22044]

PERSONNEL MANAGEMENT OFFICE

Absence and leave:
- Transference of donated annual leave from an agency's voluntary leave bank program to an emergency leave program; comments due by 12-14-07; published 10-15-07 [FR E7-20205]

Federal Employees Dental and Vision Insurance Program:
- Program administration and explanation of rules; comments due by 12-14-07; published 10-15-07 [FR E7-20193]

Prevailing rate systems; comments due by 12-14-07; published 11-14-07 [FR E7-22262]

POSTAL SERVICE

Domestic Mail Manual:
- Automation, presorted, and carrier route flat-size mail; new address and barcode requirements; comments due by 12-10-07; published 10-10-07 [FR E7-19932]
- Automation, presorted, and carrier route rate letters;

new address requirements; comments due by 12-10-07; published 10-10-07 [FR E7-19931]

SECURITIES AND EXCHANGE COMMISSION

Electronic Data Gathering, Analysis, and Retrieval System (EDGAR):

Mandatory electronic submission of Investment Company Act applications and Regulation E filings; comments due by 12-14-07; published 11-9-07 [FR E7-21911]

TRANSPORTATION DEPARTMENT

Federal Aviation Administration

Airworthiness directives:

Airbus; comments due by 12-10-07; published 11-9-07 [FR E7-21997]

Bombardier; comments due by 12-13-07; published 11-13-07 [FR E7-22103]

Dassault; comments due by 12-13-07; published 11-13-07 [FR E7-22102]

EADS SOCATA; comments due by 12-10-07; published 11-8-07 [FR E7-21782]

Pratt & Whitney; comments due by 12-10-07; published 10-10-07 [FR E7-19927]

Rogerson Aircraft Corp.; comments due by 12-10-07; published 10-25-07 [FR E7-21001]

Viking Air Ltd.; comments due by 12-14-07; published 11-14-07 [FR E7-22264]

Airworthiness standards:

Special conditions—

Boeing Model 757 series airplanes; comments due by 12-12-07; published 11-27-07 [FR E7-23079]

TRANSPORTATION DEPARTMENT

National Highway Traffic Safety Administration

Motor vehicle safety standards:

Brake hoses; comments due by 12-10-07; published 10-9-07 [FR E7-19474]

Electric powered vehicles; electrolyte spillage and electrical shock protection; comments due by 12-10-07; published 10-9-07 [FR E7-19735]

TREASURY DEPARTMENT

Prohibition on funding of unlawful Internet gambling:

Unlawful Internet Gambling Act of 2006; implementation; comments due by 12-12-07; published 10-4-07 [FR 07-04914]

LIST OF PUBLIC LAWS

This is a continuing list of public bills from the current session of Congress which have become Federal laws. It may be used in conjunction with "P L U S" (Public Laws Update Service) on 202–741–6043. This list is also available online at *http://www.archives.gov/federal-register/laws.html*.

The text of laws is not published in the **Federal Register** but may be ordered in "slip law" (individual pamphlet) form from the Superintendent of Documents, U.S. Government Printing Office, Washington, DC 20402 (phone, 202–512–1808). The text will also be made available on the Internet from GPO Access at *http://www.gpoaccess.gov/plaws/index.html*. Some laws may not yet be available.

H.R. 2089/P.L. 110–121

To designate the facility of the United States Postal Service located at 701 Loyola Avenue in New Orleans, Louisiana, as the "Louisiana Armed Services Veterans Post Office". (Nov. 30, 2007; 121 Stat. 1349)

H.R. 2276/P.L. 110–122

To designate the facility of the United States Postal Service located at 203 North Main Street in Vassar, Michigan, as the "Corporal Christopher E. Esckelson Post Office Building". (Nov. 30, 2007; 121 Stat. 1350)

H.R. 3297/P.L. 110–123

To designate the facility of the United States Postal Service located at 950 West Trenton Avenue in Morrisville, Pennsylvania, as the "Nate DeTample Post Office Building". (Nov. 30, 2007; 121 Stat. 1351)

H.R. 3307/P.L. 110–124

To designate the facility of the United States Postal Service located at 570 Broadway in Bayonne, New Jersey, as the "Dennis P. Collins Post Office Building". (Nov. 30, 2007; 121 Stat. 1352)

H.R. 3308/P.L. 110–125

To designate the facility of the United States Postal Service located at 216 East Main Street in Atwood, Indiana, as the "Lance Corporal David K. Fribley Post Office". (Nov. 30, 2007; 121 Stat. 1353)

H.R. 3325/P.L. 110–126

To designate the facility of the United States Postal Service located at 235 Mountain Road in Suffield, Connecticut, as the "Corporal Stephen R. Bixler Post Office". (Nov. 30, 2007; 121 Stat. 1354)

H.R. 3382/P.L. 110–127

To designate the facility of the United States Postal Service located at 200 North William Street in Goldsboro, North Carolina, as the "Philip A. Baddour, Sr. Post Office". (Nov. 30, 2007; 121 Stat. 1355)

H.R. 3446/P.L. 110–128

To designate the facility of the United States Postal Service located at 202 East Michigan Avenue in Marshall, Michigan, as the "Michael W. Schragg Post Office Building". (Nov. 30, 2007; 121 Stat. 1356)

H.R. 3518/P.L. 110–129

To designate the facility of the United States Postal Service located at 1430 South Highway 29 in Cantonment, Florida, as the "Charles H. Hendrix Post Office Building". (Nov. 30, 2007; 121 Stat. 1357)

H.R. 3530/P.L. 110–130

To designate the facility of the United States Postal Service located at 1400 Highway 41 North in Inverness, Florida, as the "Chief Warrant Officer Aaron Weaver Post Office Building". (Nov. 30, 2007; 121 Stat. 1358)

H.R. 3572/P.L. 110–131

To designate the facility of the United States Postal Service located at 4320 Blue Parkway in Kansas City, Missouri, as the "Wallace S. Hartsfield Post Office Building". (Nov. 30, 2007; 121 Stat. 1359)

Last List November 20, 2007

Public Laws Electronic Notification Service (PENS)

PENS is a free electronic mail notification service of newly enacted public laws. To subscribe, go to *http://listserv.gsa.gov/archives/publaws-l.html*

Note: This service is strictly for E-mail notification of new laws. The text of laws is not available through this service. **PENS** cannot respond to specific inquiries sent to this address.