Federal Register

2–4–08 Monday
Vol. 73 No. 23 Feb. 4, 2008

Pages 6419–6570

The **FEDERAL REGISTER** (ISSN 0097–6326) is published daily, Monday through Friday, except official holidays, by the Office of the Federal Register, National Archives and Records Administration, Washington, DC 20408, under the Federal Register Act (44 U.S.C. Ch. 15) and the regulations of the Administrative Committee of the Federal Register (1 CFR Ch. I). The Superintendent of Documents, U.S. Government Printing Office, Washington, DC 20402 is the exclusive distributor of the official edition. Periodicals postage is paid at Washington, DC.

The **FEDERAL REGISTER** provides a uniform system for making available to the public regulations and legal notices issued by Federal agencies. These include Presidential proclamations and Executive Orders, Federal agency documents having general applicability and legal effect, documents required to be published by act of Congress, and other Federal agency documents of public interest.

Documents are on file for public inspection in the Office of the Federal Register the day before they are published, unless the issuing agency requests earlier filing. For a list of documents currently on file for public inspection, see *www.archives.gov.*

The seal of the National Archives and Records Administration authenticates the Federal Register as the official serial publication established under the Federal Register Act. Under 44 U.S.C. 1507, the contents of the **Federal Register** shall be judicially noticed.

The **Federal Register** is published in paper and on 24x microfiche. It is also available online at no charge as one of the databases on GPO Access, a service of the U.S. Government Printing Office.

The online edition of the **Federal Register** *www.gpoaccess.gov/nara,* available through GPO Access, is issued under the authority of the Administrative Committee of the Federal Register as the official legal equivalent of the paper and microfiche editions (44 U.S.C. 4101 and 1 CFR 5.10). It is updated by 6 a.m. each day the **Federal Register** is published and includes both text and graphics from Volume 59, Number 1 (January 2, 1994) forward.

For more information about GPO Access, contact the GPO Access User Support Team, call toll free 1-888-293-6498; DC area 202-512-1530; fax at 202-512-1262; or via e-mail at *gpoaccess@gpo.gov.* The Support Team is available between 7:00 a.m. and 9:00 p.m. Eastern Time, Monday–Friday, except official holidays.

The annual subscription price for the **Federal Register** paper edition is $749 plus postage, or $808, plus postage, for a combined **Federal Register, Federal Register** Index and List of CFR Sections Affected (LSA) subscription; the microfiche edition of the **Federal Register** including the **Federal Register** Index and LSA is $165, plus postage. Six month subscriptions are available for one-half the annual rate. The prevailing postal rates will be applied to orders according to the delivery method requested. The price of a single copy of the daily **Federal Register,** including postage, is based on the number of pages: $11 for an issue containing less than 200 pages; $22 for an issue containing 200 to 400 pages; and $33 for an issue containing more than 400 pages. Single issues of the microfiche edition may be purchased for $3 per copy, including postage. Remit check or money order, made payable to the Superintendent of Documents, or charge to your GPO Deposit Account, VISA, MasterCard, American Express, or Discover. Mail to: U.S. Government Printing Office—New Orders, P.O. Box 979050, St. Louis, MO 63197-9000; or call toll free 1-866-512-1800, DC area 202-512-1800; or go to the U.S. Government Online Bookstore site, see *bookstore.gpo.gov.*

There are no restrictions on the republication of material appearing in the **Federal Register.**

How To Cite This Publication: Use the volume number and the page number. Example: 73 FR 12345.

Postmaster: Send address changes to the Superintendent of Documents, Federal Register, U.S. Government Printing Office, Washington, DC 20402, along with the entire mailing label from the last issue received.

SUBSCRIPTIONS AND COPIES

PUBLIC

Subscriptions:

Paper or fiche	**202–512–1800**
Assistance with public subscriptions	**202–512–1806**

General online information **202–512–1530; 1–888–293–6498**

Single copies/back copies:

Paper or fiche	**202–512–1800**
Assistance with public single copies	**1–866–512–1800 (Toll-Free)**

FEDERAL AGENCIES

Subscriptions:

Paper or fiche	**202–741–6005**
Assistance with Federal agency subscriptions	**202–741–6005**

FEDERAL REGISTER WORKSHOP

THE FEDERAL REGISTER: WHAT IT IS AND HOW TO USE IT

FOR: Any person who uses the Federal Register and Code of Federal Regulations.

WHO: Sponsored by the Office of the Federal Register.

WHAT: Free public briefings (approximately 3 hours) to present:

1. The regulatory process, with a focus on the Federal Register system and the public's role in the development of regulations.

2. The relationship between the Federal Register and Code of Federal Regulations.

3. The important elements of typical Federal Register documents.

4. An introduction to the finding aids of the FR/CFR system.

WHY: To provide the public with access to information necessary to research Federal agency regulations which directly affect them. There will be no discussion of specific agency regulations.

WHEN: Tuesday, March 18, 2008
9:00 a.m.–Noon

WHERE: Office of the Federal Register
Conference Room, Suite 700
800 North Capitol Street, NW.
Washington, DC 20002

RESERVATIONS: (202) 741–6008

Printed on recycled paper.

Contents

Federal Register

Vol. 73, No. 23

Monday, February 4, 2008

Agriculture Department
See Forest Service
See Rural Housing Service

Centers for Disease Control and Prevention
NOTICES
Meetings:
Advisory Board on Radiation and Worker Health (ABRWH), National Institute for Occupational Safety and Health (NIOSH), 6517–6518

Centers for Medicare & Medicaid Services
PROPOSED RULES
Medicare and Medicaid Programs:
Conditions for Coverage for End Stage Renal Disease Facilities-Extension of Timeline for Publication of Final Rule, 6451–6452

Children and Families Administration
NOTICES
Agency Information Collection Activities; Proposals, Submissions, and Approvals, 6518

Commerce Department
See International Trade Administration
See National Oceanic and Atmospheric Administration

Community Development Financial Institutions Fund
NOTICES
Request for Public Comments; Community Development Financial Institutions Program:
Community Development Financial Institutions (CDFI) Program, 6558–6559

Comptroller of the Currency
NOTICES
Agency Information Collection Activities; Proposals, Submissions, and Approvals, 6506–6515

Defense Department
NOTICES
Privacy Act of 1974; System of Records, 6484–6485
Publication of Housing Price Inflation Adjustment Under 50 U.S.C. App. Sec. 531, 6485

Education Department
NOTICES
Agency Information Collection Activities; Proposals, Submissions, and Approvals, 6485–6487
Enhanced Assessment Instruments, 6487–6491
Vocational Rehabilitation Services Projects for American Indians with Disabilities, 6491–6494

Election Assistance Commission
NOTICES
Agency Information Collection Activities; Proposals, Submissions, and Approvals, 6494–6495
Voting System Test Laboratory Accreditation Program Manual; Request for Comment, 6495

Energy Department
See Federal Energy Regulatory Commission

Environmental Protection Agency
RULES
Ohio; Revised Oxides of Nitrogen (NO_x) Regulation, Phase II, and Revised NO_x Trading Rule, 6427–6430
PROPOSED RULES
Approval and Promulgation of State Implementation Plans:
Ohio: Proposed Approval of Revised Oxides of Nitrogen (NO_x), Phase II, and Revised NO_x Trading Rule, 6451
NOTICES
Committees; Establishment, Renewal, Termination, etc.:
Farm, Ranch, and Rural Communities Advisory Committee, 6500
Meetings:
Environmental Financial Advisory Board, 6500–6501
Total Coliform Rule Distribution System Advisory Committee, 6501

Equal Employment Opportunity Commission
NOTICES
Meetings; Sunshine Act, 6501

Executive Office of the President
See Presidential Documents

Federal Aviation Administration
RULES
Airworthiness Directives:
CFM International, S.A. CFM56-7B Series Turbofan Engines, 6419–6423
Class E Airspace; correction, 6424
Establishment and Removal of Class E Airspace:
Indianapolis, IN, 6424–6425
Long Prairie, MN, 6425–6426
NOTICES
Airport Noise Compatibility Program:
Hartsfield-Jackson Atlanta International Airport, GA, 6548–6549
Meetings:
Research, Engineering, and Development Advisory Committee, 6549

Federal Communications Commission
RULES
Implementation of the Subscriber Carrier Selection Changes Provisions of the Telecommunications Act of 1996:
Policies and Rules Concerning Unauthorized Changes of Consumers Long Distance Carriers—
LEC Coalition Application for Review Regarding Carrier Change Rules, 6444–6446
NOTICES
Agency Information Collection Activities; Proposals, Submissions, and Approvals, 6501–6506

Federal Deposit Insurance Corporation
NOTICES
Agency Information Collection Activities; Proposals, Submissions, and Approvals, 6506–6515

Federal Energy Regulatory Commission
NOTICES
Intent to Prepare Environmental Assessment:
Chestnut Ridge Storage L.P.; Junction Natural Gas Storage Project; Comment Requests, 6495–6497

Notice of Amendment:
Port Dolphin Energy LLC, 6497–6498
Notice of Filing:
Airtricity Munnsville Wind Farm, LLC, 6498
Bangor Hydro-Electric Co. et al., 6498–6499
Town of Tarboro, NC, Spongex LLC, Tarboro, NC, 6499
Petition for Rate Approval:
Houston Pipe Line Company, L.P., 6499
Request Under Blanket Authorization:
Southern Star Central Gas Pipeline, Inc., 6499–6500

Federal Highway Administration
NOTICES
Express Lanes Demonstration Program, 6549–6552

Federal Motor Carrier Safety Administration
NOTICES
Commercial Driver's License Standards:
Volvo Trucks North America; Renewal of Exemption, 6552–6553

Federal Reserve System
NOTICES
Agency Information Collection Activities; Proposals, Submissions, and Approvals, 6506–6517
Change in Bank Control:
Acquisition of Shares of Bank or Bank Holding Companies, 6517

Federal Transit Administration
NOTICES
Agency Information Collection Activities; Proposals, Submissions, and Approvals, 6554

Fish and Wildlife Service
NOTICES
Wallkill River National Wildlife Refuge, Sussex, NJ, 6522–6524

Food and Drug Administration
NOTICES
Meetings:
Pulmonary-Allergy Drug Advisory Committee; Cancellation, 6518

Forest Service
NOTICES
Environmental Impact Statement:
Bridger-Teton National Forest; Wyoming State Office, 6453–6454
Environmental Statements; Availability, etc.:
Clearwater National Forest, ID; Travel Management Plan, 6454–6456
Meetings:
Lake Tahoe Basin Federal Advisory Committee, 6456
Roadless Area Conservation National Advisory Committee, 6456–6457
Notice of Availability; USDA Forest Service Open Space Conservation Strategy, 6457

Health and Human Services Department
See Centers for Disease Control and Prevention
See Centers for Medicare & Medicaid Services
See Children and Families Administration
See Food and Drug Administration
See National Institutes of Health

Homeland Security Department
See National Communications System
See U.S. Customs and Border Protection

Indian Affairs Bureau
NOTICES
Agency Information Collection Activities; Proposals, Submissions, and Approvals, 6524–6525

Interior Department
See Fish and Wildlife Service
See Indian Affairs Bureau
See Land Management Bureau
See National Park Service

Internal Revenue Service
NOTICES
Agency Information Collection Activities; Proposals, Submissions, and Approvals, 6559–6564
Meetings:
Taxpayer Advocacy Panels, 6564

International Trade Administration
NOTICES
Antidumping or Contervailing Duty Order, Finding, or Suspended Investigation:
Opportunity to Request Administrative Review, 6477–6479
Final Determination of Sales at Less Than Fair Value:
Sodium Hexametaphosphate from China, 6479–6482

International Trade Commission
NOTICES
Advise Concerning Modifications to U.S. Generalized System of Preferences:
2007 Review of Competitive Need Limit Waivers, 6526–6527

Justice Department
See Parole Commission
PROPOSED RULES
Procedures for Completing Uniform Forms of Trustee Final Reports:
Cases Filed Under Chapters 7, 12, and 13 of Title 11, 6447–6451
NOTICES
Lodging of Consent Decree:
Comprehensive Environmental Response, Compensation, and Liability Act, 6527–6528

Land Management Bureau
RULES
Oil and Gas Leasing; National Petroleum Reserve-Alaska, 6430–6444
NOTICES
Environmental Impact Statement:
Bridger-Teton National Forest; Wyoming State Office, 6453–6454
Meetings:
Northwest California Resource Advisory Council, 6525

National Communications System
NOTICES
Meetings:
President's National Security Telecommunications Advisory Committee, 6521–6522

National Highway Traffic Safety Administration
NOTICES
Agency Information Collection Activities; Proposals, Submissions, and Approvals, 6554–6556

Reports, Forms, and Record Keeping Requirements, 6556–6558

National Institutes of Health
NOTICES
Meetings:
Clinical Center, 6518
National Institute of General Medical Sciences, 6518–6519
National Institute on Aging, 6519
Scientific Review Center, 6519–6521

National Oceanic and Atmospheric Administration
NOTICES
Agency Information Collection Activities; Proposals, Submissions, and Approvals, 6482–6484
Meetings:
Hydrographic Services Review Panel, 6484

National Park Service
NOTICES
National Register of Historic Places;
Notification of Pending Nominations and Related Actions, 6525–6526

Nuclear Regulatory Commission
NOTICES
Consideration of Issuance of Amendment to Facility Operating License, Proposed No Significant Hazards, etc.:
Florida Power Corporation, et al.; Correction, 6528
Dominion Virginia Power; Acceptance for Docketing Application:
Combined License for North Anna Unit 3 Docket No. 52-017, 6528–6529
Opportunity To Comment on Model Safety Evaluation on Technical Specification Improvement To Revise Containment Isolation Valve Completion Times, etc., 6529–6537

Parole Commission
NOTICES
Meetings:
Record of Vote; Meeting Closure, 6528

Postal Regulatory Commission
RULES
Administrative Practice and Procedure, Postal Service:
Corrections, 6426–6427

Presidential Documents
ADMINISTRATIVE ORDERS
Migration and Refugee Assistance Act of 1962; availability of funds (Presidential Determination)
No. 2008-10 of January 29, 2008, 6569
Turkey; proposed agreement for cooperation with the U.S. concerning peaceful uses of nuclear energy (Presidential Determination)
No. 2008-8 of January 22, 2008, 6565–6567

Rural Housing Service
NOTICES
Funds Availability (NOFA) Inviting Applications for the Rural Community Development Initiative (RCDI) for Fiscal Year 2008, 6457–6466
Request for Proposals:
National Emergency or Disaster Grants for Low-Income Migrant and Seasonal Farm Workers, 6467–6469
Section 538 Guaranteed Rural Rental Housing Program for FY 2008, 6469–6477

Securities and Exchange Commission
NOTICES
Self-Regulatory Organizations; Proposed Rule Changes:
Financial Industry Regulatory Authority, Inc., 6537–6539
New York Stock Exchange LLC, 6539–6542
NYSE Arca, Inc., 6542–6544
Philadelphia Stock Exchange, Inc., 6544–6546

State Department
NOTICES
Meetings:
Cultural Property Advisory Committee, 6546–6547
International Telecommunication Advisory Committee, 6547
Shipping Coordinating Committee, 6547
Proposal to Extend Memorandum of Understanding Between United States and Kingdom of Cambodia:
Imposition of Import Restrictions on Khmer Archaeological Material, 6547
Termination of Statutory Debarment:
Pursuant to Section 38(g)(4) of the Arms Export Control Act; Peter Appelbaum, 6548

Thrift Supervision Office
NOTICES
Agency Information Collection Activities; Proposals, Submissions, and Approvals, 6506–6515

Transportation Department
See Federal Aviation Administration
See Federal Highway Administration
See Federal Motor Carrier Safety Administration
See Federal Transit Administration
See National Highway Traffic Safety Administration

Treasury Department
See Community Development Financial Institutions Fund
See Comptroller of the Currency
See Internal Revenue Service
See Thrift Supervision Office

U.S. Customs and Border Protection
NOTICES
Agency Information Collection Activities; Proposals, Submissions, and Approvals, 6522

Separate Parts In This Issue

Part II
Executive Office of the President, Presidential Documents, 6565–6567, 6569

Reader Aids
Consult the Reader Aids section at the end of this issue for phone numbers, online resources, finding aids, reminders, and notice of recently enacted public laws.

To subscribe to the Federal Register Table of Contents LISTSERV electronic mailing list, go to http://listserv.access.gpo.gov and select Online mailing list archives, FEDREGTOC-L, Join or leave the list (or change settings); then follow the instructions.

CFR PARTS AFFECTED IN THIS ISSUE

A cumulative list of the parts affected this month can be found in the Reader Aids section at the end of this issue.

3 CFR
Administrative Orders:
Presidential
Determinations:
No. 2008–8 of January
22, 2008 6567
No. 2008–10 of
January 29, 2008 6569

14 CFR
39 6419
71 (3 documents) 6424, 6415

28 CFR
Proposed Rules:
58 6447

39 CFR
3020 6426

40 CFR
52 6427
Proposed Rules:
52 6451

42 CFR
Proposed Rules:
400 6451
405 6451
410 6451
412 6451
413 6451
414 6451
488 6451
494 6451

43 CFR
3130 6430

47 CFR
64 6444

Rules and Regulations

Federal Register

Vol. 73, No. 23

Monday, February 4, 2008

This section of the FEDERAL REGISTER contains regulatory documents having general applicability and legal effect, most of which are keyed to and codified in the Code of Federal Regulations, which is published under 50 titles pursuant to 44 U.S.C. 1510.

The Code of Federal Regulations is sold by the Superintendent of Documents. Prices of new books are listed in the first FEDERAL REGISTER issue of each week.

DEPARTMENT OF TRANSPORTATION

Federal Aviation Administration

14 CFR Part 39

[Docket No. FAA–2007–27229; Directorate Identifier 2007–NE–03–AD; Amendment 39–15359; AD 2008–03–09]

RIN 2120–AA64

Airworthiness Directives; CFM International, S.A. CFM56–7B Series Turbofan Engines

AGENCY: Federal Aviation Administration (FAA), Department of Transportation.

ACTION: Final rule.

SUMMARY: The FAA is adopting a new airworthiness directive (AD) for CFM International, S.A. CFM56–7B series turbofan engines. This AD requires revising the Airworthiness Limitations Section (ALS) in the Engine Shop Manual (ESM) and the air carrier's approved continuous airworthiness maintenance program (CAMP) to add mandatory inspections of certain low pressure turbine rear frames (TRFs) to the ALS or CAMP. This AD results from a refined lifing analysis by the engine manufacturer that shows the need to identify an initial threshold for inspecting certain TRFs. We are issuing this AD to prevent failure of the TRF from low-cycle fatigue cracks. Failure of the TRF could result in engine separation from the airplane, which could lead to loss of control of the airplane.

DATES: This AD becomes effective March 10, 2008.

ADDRESSES: The Docket Operations office is located at Docket Management Facility, U.S. Department of Transportation, 1200 New Jersey Avenue, SE., West Building Ground Floor, Room W12–140, Washington, DC 20590–0001.

FOR FURTHER INFORMATION CONTACT: Antonio Cancelliere, Aerospace Engineer, Engine Certification Office, FAA, Engine and Propeller Directorate, 12 New England Executive Park, Burlington, MA 01803; telephone (781) 238–7751; fax (781) 238–7199.

SUPPLEMENTARY INFORMATION: The FAA proposed to amend 14 CFR part 39 with a proposed AD. The proposed AD applies to CFM International, S.A. CFM56–7B series turbofan engines. We published the proposed AD in the **Federal Register** on April 23, 2007 (72 FR 20075). That action proposed to require revising the ALS in the Engine Shop Manual and the air carrier's approved continuous airworthiness maintenance program (CAMP) to add mandatory inspections of certain low pressure turbine rear frames (TRFs) to the ALS or CAMP.

Examining the AD Docket

You may examine the AD docket on the Internet at *http://www.regulations.gov*; or in person at the Docket Operations office between 9 a.m. and 5 p.m., Monday through Friday, except Federal holidays. The AD docket contains this AD, the regulatory evaluation, any comments received, and other information. The street address for the Docket Operations office (telephone (800) 647–5527) is provided in the **ADDRESSES** section. Comments will be available in the AD docket shortly after receipt.

Comments

We provided the public the opportunity to participate in the development of this AD. We have considered the comments received.

Update Table for Figure 805

Delta Airlines requests that we change the wording in the table for Figure 805 because CFM International updated CFM56–7B Engine Shop Manual section 05–21–03, with Temporary Revision 05–0080, dated December 5, 2006. We agree and have reworded the table for Figure 805 to reflect wording used by the original equipment manufacturer (OEM). For clarification, we also moved the titles for Figures 806 and 807 to the beginning of the figures.

Guidance on Future Revisions

Delta Airlines also suggests that we provide guidance on making future OEM revisions to ESM section 05–21–03 while maintaining compliance with the AD. We disagree. The information contained within sections (j) and (k) of the AD is adequate. Any future OEM changes to the ALS that affect compliance with this AD will require an AD revision or supersedure, depending on the specific situation. Airlines should make changes to items outside of this specific area and incorporate them into their ESM or CAMP per their normal procedures.

Add Part Numbers (P/Ns) to Applicability

Finally, Delta Airlines requests that we add P/Ns 340–166–251–0, 340–166–252–0 and 340–166–253–0 to the Applicability section and clarify whether these P/Ns will be applicable to the business jet application as well as the commercial application. We disagree. The intent of this AD is to make operators aware of the life limit/mandatory inspections recently introduced by CFM International in the Airworthiness Limitations Section of the CFM56–7B Engine Shop Manual that affect P/Ns that were not previously limited. Ignoring these new limitations could create a potentially unsafe condition. The P/Ns listed above were subject to a life limit and mandatory inspection when first introduced to the ESM, therefore, there is no potential unsafe condition. Business jet and commercial engine model applicability of the new P/Ns is as listed in the ESM.

Conclusion

We have carefully reviewed the available data, including the comments received, and determined that air safety and the public interest require adopting the AD with the changes described previously. We have determined that these changes will neither increase the economic burden on any operator nor increase the scope of the AD.

Costs of Compliance

We estimate that this AD will affect 1,228 engines installed on airplanes of U.S. registry. While the cost of making the manual change is negligible, the resulting inspections must be discussed. Since life extensions are possible on condition, the cost of the AD is limited to performing TRF inspections. We estimate that it will take about 3.0 work-hours per engine to perform the actions, including the TRF inspections, and that the average labor rate is $80 per work-

hour. No parts are required. Based on these figures, we estimate the total cost of the AD to U.S. operators to be $294,720.

Authority for This Rulemaking

Title 49 of the United States Code specifies the FAA's authority to issue rules on aviation safety. Subtitle I, Section 106, describes the authority of the FAA Administrator. Subtitle VII, Aviation Programs, describes in more detail the scope of the Agency's authority.

We are issuing this rulemaking under the authority described in Subtitle VII, Part A, Subpart III, Section 44701, ''General requirements.'' Under that section, Congress charges the FAA with promoting safe flight of civil aircraft in air commerce by prescribing regulations for practices, methods, and procedures the Administrator finds necessary for safety in air commerce. This regulation is within the scope of that authority because it addresses an unsafe condition that is likely to exist or develop on products identified in this rulemaking action.

Regulatory Findings

We have determined that this AD will not have federalism implications under Executive Order 13132. This AD will not have a substantial direct effect on the States, on the relationship between the national government and the States, or on the distribution of power and responsibilities among the various levels of government.

For the reasons discussed above, I certify that this AD:

(1) Is not a ''significant regulatory action'' under Executive Order 12866;

(2) Is not a ''significant rule'' under DOT Regulatory Policies and Procedures (44 FR 11034, February 26, 1979); and

(3) Will not have a significant economic impact, positive or negative, on a substantial number of small entities under the criteria of the Regulatory Flexibility Act.

We prepared a summary of the costs to comply with this AD and placed it in the AD Docket. You may get a copy of this summary at the address listed under **ADDRESSES**.

List of Subjects in 14 CFR Part 39

Air transportation, Aircraft, Aviation safety, Safety.

Adoption of the Amendment

■ Accordingly, under the authority delegated to me by the Administrator, the Federal Aviation Administration amends 14 CFR part 39 as follows:

PART 39—AIRWORTHINESS DIRECTIVES

■ 1. The authority citation for part 39 continues to read as follows:

Authority: 49 U.S.C. 106(g), 40113, 44701.

§ 39.13 [Amended]

■ 2. The FAA amends § 39.13 by adding the following new airworthiness directive:

2008–03–09 CFM International, S.A.: Amendment 39–15359. Docket No. FAA–2007–27229; Directorate Identifier 2007–NE–03–AD.

Effective Date

(a) This airworthiness directive (AD) becomes effective March 10, 2008.

Affected ADs

(b) None.

Applicability

(c) This AD applies to CFM International, S.A. CFM56–7B18, –7B20, –7B22, –7B24, –7B26, –7B27, –7B22/B1, –7B24/B1, –7B26/B1, –7B27/B1, –7B22/B2, –7B26/B2, –7B27/B3 turbofan engines with turbine rear frame (TRF), part numbers 340–166–205–0, 340–166–206–0, 340–166–207–0, 340–166–208–0, 340–166–209–0, and 340–166–210–0, installed. These engines are installed on, but not limited to, Boeing 737 series airplanes.

Unsafe Condition

(d) This AD results from a refined lifing analysis by the engine manufacturer that shows the need to identify an initial threshold for inspecting certain TRFs. We are issuing this AD to prevent failure of the TRF from low-cycle fatigue cracks. Failure of the TRF could result in engine separation from the airplane, which could lead to loss of control of the airplane.

Compliance

(e) You are responsible for having the actions required by this AD performed within 30 days after the effective date of this AD, unless the actions have already been done.

Mandatory Inspections

(f) Within the next 30 days after the effective date of this AD, revise the applicable inspection program for the Business Jet and Air Carrier engine models by adding the Mandatory Inspection Intervals as specified in this AD, and revise the Airworthiness Limitations Section (ALS) (chapter 05–21–03) of the CFM56–7B Engine Shop Manual, CFMI–TP–SM.10 by adding the following:

TURBINE REAR FRAME WITH TANGENTIAL STRUTS—MANDATORY INSPECTIONS—LIFE LIMITS

TASK 05–21–03–200–001

1. *General*

A. This section contains the FAA and EASA mandatory Eddy Current inspection intervals for the turbine rear frame with tangential struts. The inspection uses:

—A threshold limit, specified in flight cycles

—Inspection intervals, specified in flight cycles

B. The threshold limit is the timing of the first required inspection. First inspection must be done before that part has reached the threshold number of flight cycles.

C. The inspection intervals specify the timing of inspections to be done after the threshold inspection has been reached. Inspections are repetitive without any limit.

2. *Mandatory Inspection Intervals for the Critical Areas of the Turbine Rear Frame with Tangential Struts (4 Mount Struts, No. 1, 2, 15, and 16).*

C. Turbine Rear Frame Part Numbers 340–166–205–0, 340–166–206–0, 340–166–207–0, 340–166–208–0, 340–166–209–0, 340–166–210–0, for all CFM56–7B SAC engine models (except –7B27A engine models). Refer to figure 805.

Figure index No.	Inspection location	Inspection threshold (cycles since new)	Inspection intervals (cycles)	Inspection reference
805	Strut/outer ring fillet radius on trailing edge (A).	25,000* for –7B SAC (except business jet) engine models.	Refer to Figure 806* for –7B SAC (except business jet) engine models.	Refer to SB 72–0579.*
	Strut/hub fillet radius on leading edge (B).	19,000* for –7B SAC business jet engine models.	Refer to Figure 807* for –7B SAC business jet engine models.	
	Strut/outer ring fillet radius on trailing edge (C1 below outer ring).			
	Strut/outer ring fillet radius on trailing edge (C2 above outer ring).			

Note: * Applicable to all inspection locations. If inspection is not performed, part must be removed.

BILLING CODE 4910–13–P

Figure 805

Turbine Rear Frame with Tangential Struts P/N 340-166-205-0, 340-166-206-0, 340-166-207-0, 340-166-208-0, 340-166-209-0, 340-166-210-0 – Areas to Be Inspected

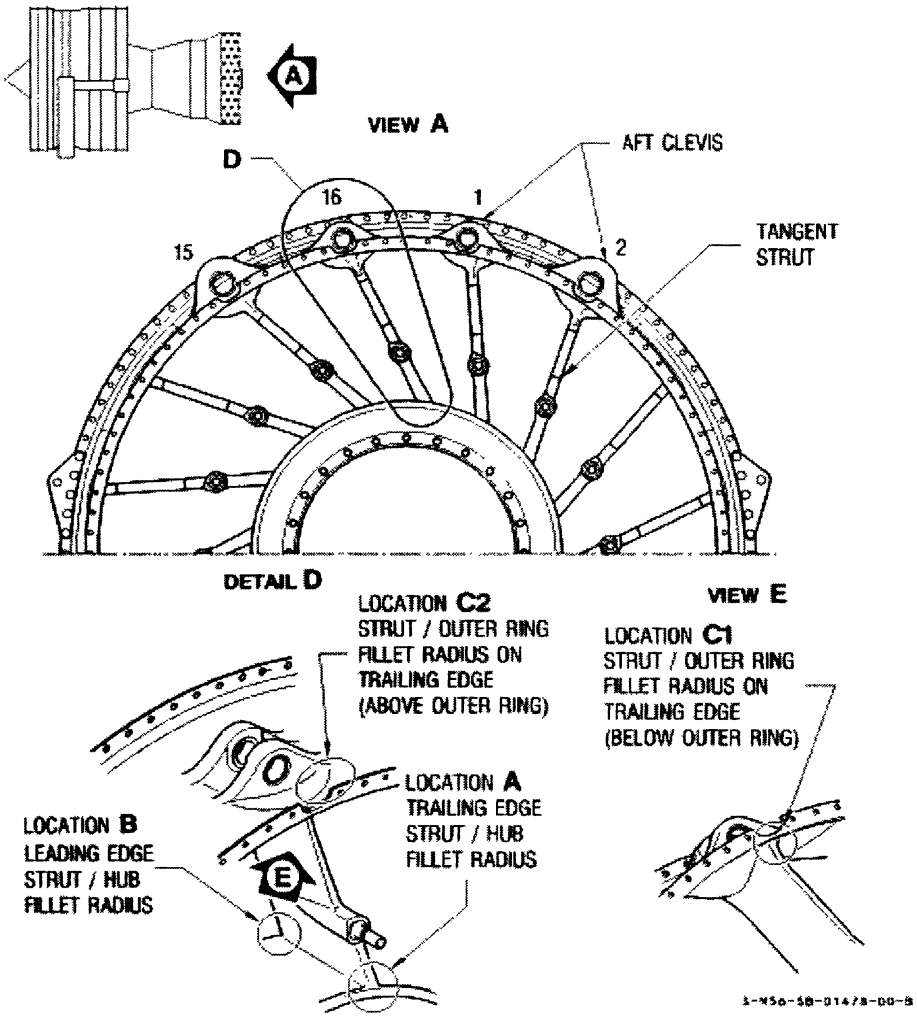

Figure 806
Inspection Intervals for -7B SAC (Except Business Jet) Engine Models

MANDATORY INSPECTION INTERVAL FOR TURBINE REAR FRAME P/N 340-166-205/206/207/208/209/210-0

If no crack is found on any of the four mount struts, the turbine rear frame is serviceable and must be re-inspected at 4,700 cycle repetitive intervals. If cracks are found on the mount struts, the TRF must be re-inspected according to the following repetitive intervals:

TOTAL CUMULATED CRACK LENGTH AT EACH LOCATION	RE-INSPECT WITHIN
$L < 0.20$ (5)	4,700
0.20 (5) $\leq L < 0.28$ (7)	3.300
0.28 (7) $\leq L < 0.39$ (10)	1,300
0.39 (10) $\leq L < 0.59$ (15)	700
0.59 (15) $\leq L < 0.79$ (20)	120
$L \geq 0.79$ (20)	IMMEDIATELY REMOVE THE TURBINE FRAME

During each inspection, all the locations must be inspected. If cracks are found at different locations, the repetitive inspection interval is the minimum interval corresponding to the max. cumulated crack lengths.

NOTE: Dimensions are in inches with millimeters in parentheses.

Figure 807
Inspection Intervals for -7B SAC Business Jet Engine Models

MANDATORY INSPECTION INTERVAL FOR TURBINE REAR FRAME P/N 340-166-205/206/207/208/209/210-0

If no crack is found on any of the four mount struts, the turbine rear frame is serviceable and must be re-inspected at 3,300 cycle repetitive intervals. If cracks are found on the mount struts, the TRF must be re-inspected according to the following repetitive intervals:

TOTAL CUMULATED CRACK LENGTH AT EACH LOCATION	RE-INSPECT WITHIN
L < 0.20 (5)	3,300
0.20 (5) ≤ L < 0.28 (7)	2,400
0.28 (7) ≤ L < 0.39 (10)	900
0.39 (10) ≤ L < 0.59 (15)	500
0.59 (15) ≤ L < 0.79 (20)	80
L ≥ 0.79 (20)	IMMEDIATELY REMOVE THE TURBINE FRAME

During each inspection, all the locations must be inspected. if cracks are found at different locations, the repetitive inspection interval is the minimum interval corresponding to the maximum cumulated crack lengths.

NOTE: Dimensions are in inches with millimeters in parentheses"

(g) After the effective date of this AD, we will not approve any alternative inspection intervals for these parts except as provided for in paragraph (j) of this AD.

TRFs With Unknown Cycles

(h) If you cannot establish the number of cycles accumulated since new, remove or inspect the TRF within 300 cycles-in-service after the effective date of this AD. The CFM56–7B Engine Shop Manual (ESM) or air carrier's approved continuous airworthiness maintenance program (CAMP) contains information for inspecting the TRF.

(i) You may install a TRF removed in paragraph (h) of this AD after the TRF passes an initial inspection for cracks. The CFM56–7B ESM or CAMP contains information on inspecting the TRF.

Alternative Methods of Compliance

(j) The Manager, Engine Certification Office, has the authority to approve alternative methods of compliance for this AD if requested using the procedures found in 14 CFR 39.19.

Maintaining Records of the Mandatory Inspections

(k) You have met the requirements of this AD by making the changes to the Engine Shop Manual as specified in paragraph (f) of this AD, and, for air carriers operating under part 121 of the Federal Aviation Regulations (14 CFR part 121), by modifying your continuous airworthiness maintenance plan to reflect those changes. You must maintain records of the mandatory inspections that result from those changes to the ALS according to the regulations governing your operation. You do not need to record each inspection as compliance to this AD. For air carriers operating under part 121, you may use the system established to comply with section 121.369.

Related Information

(l) CFM International Service Bulletin CFM56–7B S/B 72–0579, Revision 1, dated October 27, 2006, contains information about Eddy Current inspection.

(m) Contact Antonio Cancelliere, Aerospace Engineer, Engine Certification Office, FAA, Engine and Propeller Directorate, 12 New England Executive Park, Burlington, MA 01803; telephone (781) 238–7751; fax (781) 238–7199, for more information about this AD.

Issued in Burlington, Massachusetts, on January 23, 2008.

Peter A. White,

Assistant Manager, Engine and Propeller Directorate, Aircraft Certification Service.

[FR Doc. E8–1830 Filed 2–1–08; 8:45 am]

BILLING CODE 4910–13–C

DEPARTMENT OF TRANSPORTATION

Federal Aviation Administration

14 CFR Part 71

[Docket FAA No. FAA–2007–28649; Airspace Docket No. 07–ANM–10]

Establishment of Class E Airspace; Wheatland, WY

AGENCY: Federal Aviation Administration (FAA), DOT.

ACTION: Final rule; correction.

SUMMARY: This action corrects a final rule published in the **Federal Register** January 8, 2008 (73 FR 1271), Airspace Docket No. 07–ANM–10, FAA Docket No. FAA–2007–28649. In that rule, an error was made in the legal description for Wheatland, WY. Specifically, the latitude referencing Wheatland, Phifer Airfield, WY stated ''* * * lat. 43°03′20″ N.'' instead of ''* * * lat. 42°03′20″ N.'' This action corrects that error.

DATES: *Effective Date:* 0901 UTC, April 10, 2008. The Director of the Federal Register approves this incorporation by reference action under 1 CFR part 51, subject to the annual revision of FAA Order 7400.9 and publication of conforming amendments.

FOR FURTHER INFORMATION CONTACT: Eldon Taylor, Federal Aviation Administration, System Support Group, Western Service Area, 1601 Lind Avenue, SW., Renton, WA 98057; telephone (425) 203–4537.

SUPPLEMENTARY INFORMATION:

History

On January 8, 2008, a final rule for Airspace Docket No. 07–ANM–10, FAA Docket No. FAA–2007–28649 was published in the **Federal Register** (73 FR 1271), establishing Class E airspace in Wheatland, WY. The latitude referencing Wheatland, Phifer Airfield, WY was incorrect in that the latitude stated ''* * * lat. 43°03′20″ N.'' instead of ''* * * lat. 42°03′20″ N.'' This action corrects that error.

Correction to Final Rule

■ Accordingly, pursuant to the authority delegated to me, the legal description as published in the **Federal Register** on January 8, 2008 (73 FR 1271), Airspace Docket No. 07–ANM–10, FAA Docket No. FAA–2007–28649, and incorporated by reference in 14 CFR 71.1, is corrected as follows:

§ 71.1 [Amended]

■ On page 1271, correct the legal description for Wheatland, WY, to read as follows:

Paragraph 6005 Class E airspace areas extending upward from 700 feet or more above the surface of the earth.

* * * * *

ANM WY E5 Wheatland, WY [New]

Wheatland, Phifer Airfield, WY
(Lat. 42°03′20″ N., long. 104°55′43″ W.)

That airspace extending upward from 700 feet above the surface within a 9-mile radius of Phifer Airfield, WY and within 4 miles north and 4 miles south of the Phifer Airfield, WY 080° radial extending from the 9-mile radius to 12.90 miles east of the Phifer Airfield, WY.

* * * * *

Issued in Seattle, Washington, on January 14, 2008.

Clark Desing,

Manager, System Support Group, Western Service Center.

[FR Doc. E8–1846 Filed 2–1–08; 8:45 am]

BILLING CODE 4910–13–P

DEPARTMENT OF TRANSPORTATION

Federal Aviation Administration

14 CFR Part 71

[Docket No. FAA–2008–026; Airspace Docket No. 08–AGL–2]

Establishment of Class E5 Airspace; Indianapolis, IN

AGENCY: Federal Aviation Administration (FAA), DOT.

ACTION: Direct final rule request for comments.

SUMMARY: This action proposes to establish Class E5 airspace at Indianapolis, IN. Additional controlled airspace is necessary to accommodate aircraft using new RNAV Global Positioning System (GPS) Standard Instrument Approach Procedures (SIAP). The FAA is proposing this action to enhance the safety and management of Instrument Flight Rules (IFR) aircraft operations at Hendricks County-Gordon Graham Field Airport, Indianapolis, IN.

DATES: Effective 0901 UTC April 10, 2008. Comments for inclusion in the rules Docket must be received on or before February 25, 2008. The Director of the Federal Register approves this incorporation by reference action under Title 1, Code of Federal Regulations, part 51, subject to the annual revision of FAA Order 7400.9 and publication of conforming amendments.

ADDRESSES: Send comments on this proposal to the U.S. Department of Transportation, Docket Operations, 1200 New Jersey Avenue, SE., West Building Ground Floor, Room W12–140, Washington, DC 20590–0001. You must identify the docket number FAA–2008–026/Airspace Docket No. 08–AGL–2 at the beginning of your comments. You may also submit comments through the Internet at *http://regulations.gov*. You may review the public docket containing the proposal, any comments received, and any final disposition in person in the Dockets Office between 9 a.m. and 5 p.m., Monday through Friday, except Federal holidays. The Docket Office (telephone 1–800–647–5527) is on the ground floor of the building at the above address.

FOR FURTHER INFORMATION CONTACT: Joe Yadouga, Central Service Center, System Support Group, Federal Aviation Administration, Southwest Region, Fort Worth, TX 76193–0530; telephone (817) 222–5597.

SUPPLEMENTARY INFORMATION:

The Direct Final Rule Procedure

The FAA anticipates that this regulation will not result in adverse or negative comments, and, therefore, issues it as a direct final rule. Unless a written adverse or negative comment or a written notice of intent to submit an adverse or negative comment is received within the comment period, the regulation will become effective on the date specified above. After the close of the comment period, the FAA will publish a document in the **Federal Register** indicating that no adverse or negative comments were received and confirming the effective date of the rule. If the FAA receives, within the comment period, an adverse or negative comment, or written notice of intent to submit such a comment, a document withdrawing the direct final rule will be published in the **Federal Register**, and a notice of proposed rulemaking may be published with a new comment period.

Comments Invited

Although this action is in the form of a direct final rule, and was not preceded by a notice of proposed rulemaking, interested persons are invited to comment on this rule by submitting such written data, views, or arguments as they may desire. An electronic copy of this document may be downloaded from *http://www.regulations.gov*. Communications should identify both docket numbers and be submitted in triplicate to the address specified under the caption **ADDRESSES** above or through the Web site. All communications received on or before the closing date for comments will be considered, and this rule may be amended or withdrawn in light of the comments received.

The Rule

This amendment to Title 14, Federal Regulations (14 CFR) part 71 establishes Class E5 airspace at Indianapolis, IN, providing the airspace required to support the new RNAV (GPS) RWY 18 approach developed for IFR landings at Hendricks Co-Gordon Graham Field. Controlled airspace extending upward from 700 feet above the surface is required to encompass all SIAP and for the safety of IFR operations at Hendricks County-Gordon Graham Field Airport. Designations for Class E5 airspace areas extending upward from 700 feet above the surface of the earth are published in the FAA Order 7400.9R, signed August 15, 2007 and effective September 15, 2007, which is incorporated by reference in 14 CFR part 71.1. Class E5 designations listed in this document will be published subsequently in the Order.

Agency Findings

The regulations adopted herein will not have substantial direct effects on the States, on the relationship between the national government and the States, or on the distribution of power and responsibilities among various levels of government. Therefore, it is determined that this final rule does not have federalism implication under Executive Order 13132.

The FAA has determined that this regulation only involves an established body of technical regulations for which frequent and routine amendments are necessary to keep them operationally current, is non-controversial and unlikely to result in adverse or negative comments. It, therefore, (1) is not a ''significant regulatory action'' under Executive Order 12866; (2) is not a ''significant rule'' under DOT Regulatory Policies and Procedures (44 FR 11034; February 26, 1979); and (3) does not warrant preparation of a Regulatory Evaluation as the anticipated impact is so minimal since this is a routine matter that will only affect air traffic procedures and air navigation, it is certified that this rule, when promulgated, will not have a significant economic impact on a substantial number of small entities under the criteria of the Regulatory Flexibility Act.

The FAA's authority to issue rules regarding aviation safety is found in Title 49, of the United States Code, subtitle I, section 106 describes the authority of the FAA Administrator. Subtitle VII, Aviation Programs, describes in more detail the scope of the agency's authority.

This rulemaking is promulgated under the authority described in subtitle VII, part A, subpart I, section 40103. Under that section, the FAA is charged with prescribing regulations to assign the use of airspace necessary to ensure the safety of aircraft and the efficient use of airspace. This regulation is within the scope of that authority as it establishes Class E5 airspace near Indianapolis, IN.

List of Subjects in 14 CFR Part 71

Airspace, Incorporation by reference, Navigation (Air).

Adoption of the Amendment

■ In consideration of the foregoing, the Federal Aviation Administration amends 14 CFR part 71 as follows:

PART 71—DESIGNATION OF CLASS A, B, C, D AND E AIRSPACE AREAS; AIR TRAFFIC SERVICE ROUTES; AND REPORTING POINTS

■ 1. The authority citation for part 71 continues to read as follows:

Authority: 49 U.S.C. 106(g); 40103, 40113, 40120; E.O. 10854, 24 FR 9565, 3 CFR 1959–1963 Comp., p 389.

§ 71.1 [Amended]

■ 2. The incorporation by reference in 14 CFR 71.1 of Federal Aviation Administration Order 7400.9R, Airspace Designation and Reporting Points, signed August 15, 2007, and effective September 15, 2007, is amended as follows:

Paragraph 6002 Class E5 airspace areas extending upward from 700 feet above the surface of the earth.

* * * * *

AGL In Class E5 Indianapolis, IN [New]

Hendricks County-Gordon Graham Field
(Lat. 30°44′48″ N., long. 86°28′31″ W.)

That airspace extending upward from 700 feet above the surface within a 6.4-mile radius of Hendricks County-Gordon Graham Field. This Class E5 airspace is effective during specific dates and times established in advance by Notice to Airmen. The effective date and time will thereafter be continuously published in the Airport/Facility Directory.

* * * * *

Issued in Fort Worth, TX, on January 10, 2008.

Donald R. Smith,

Manager, System Support Group, ATO Central Service Area.

[FR Doc. 08–429 Filed 2–1–08; 8:45 am]

BILLING CODE 4910–13–M

DEPARTMENT OF TRANSPORTATION

Federal Aviation Administration

14 CFR Part 71

[Docket No. FAA–2008–023; Airspace Docket No. 08–AGL–1]

Establishment of Class E5 Airspace; Long Prairie, MN

AGENCY: Federal Aviation Administration (FAA), DOT.

ACTION: Direct final rule; request for comments.

SUMMARY: This action establishes Class E5 airspace at Long Prairie, MN. Additional controlled airspace is necessary to accommodate aircraft using new RNAV Global Positioning System (GPS) Standard Instrument Approach Procedures (SIAP). The FAA proposes this action to enhance the safety and management of Instrument Flight Rules (IFR) aircraft operations at Todd Field, Long Prairie, MN.

DATES: *Effective:* 0901 UTC April 10, 2008. Comments for inclusion in the rules Docket must be received on or before March 20, 2008. The Director of the Federal Register approves this incorporation by reference action under Title 1, Code of Federal Regulations, part 51, subject to the annual revision of FAA Order 7400.9 and publication of conforming amendments.

ADDRESSES: Send comments on this proposal to the U.S. Department of Transportation, Docket Operations, 1200 New Jersey Avenue, SE., West Building Ground Floor, Room W12–140, Washington, DC 20590–0001. You must identify the docket number FAA–2008–023/Airspace Docket No. 08–AGL–1, at the beginning of your comments. You may also submit comments through the Internet at *http://regulations.gov.* You may review the public docket containing the proposal, any comments received, and any final disposition in person in the Dockets Office between 9 a.m. and 5 p.m., Monday through Friday, except Federal holidays. The Docket Office (telephone 1–800–647–5527) is on the ground floor of the building at the above address.

FOR FURTHER INFORMATION CONTACT: Joe Yadouga, Central Service Center, System Support Group, Federal Aviation Administration, Southwest Region, Fort Worth, TX, 76193–0530; telephone (817) 222–5597.

SUPPLEMENTARY INFORMATION:

The Direct Final Rule Procedure

The FAA anticipates that this regulation will not result in adverse or

negative comments, and, therefore, issues it as a direct final rule. Unless a written adverse or negative comment or a written notice of intent to submit an adverse or negative comment is received within the comment period, the regulation will become effective on the date specified above. After the close of the comment period, the FAA receives, within the comment period, an adverse or negative comment, or written comment notice of intent to submit such a comment, a document withdrawing the direct final rule will be published in the **Federal Register** and a notice of proposed rulemaking may be published with a new comment period.

Comments Invited

Although this action is in the form of a direct final rule, and was not preceded by a notice of proposed rulemaking, interested persons are invited to comment on this rule by submitting such written data, views, or arguments as they may desire. An electronic copy of this document may be downloaded from *http://www.regulations.gov*. Communications should identify both docket numbers and be submitted in triplicate to the address specified under the caption **ADDRESSES** above or through the Web site. All communications received on or before the closing date for comments will be considered, and this rule may be amended or withdrawn in light of the comments received.

The Rule

This amendment to Title 14, Code of Federal Regulations (14 CFR) part 71 establishes Class E5 airspace at Long Prairie, MN, providing the airspace required to support the new RNAV (GPS) RWY 34 approach developed for IFR landings at Todd Field. Controlled airspace extending upward from 700 feet above the surface is required to encompass all SIAPs and for the safety of IFR operations at Todd Field. Designations for Class E5 airspace areas extending upward from 700 feet above the surface of the earth are published in the FAA order 7400.9R, signed August 15, 2007 and effective September 15, 2007, which is incorporated by reference in 14 CFR part 71.1. Class E5 designations listed in this document will be published subsequently in the Order.

Agency Findings

The regulations adopted herein will not have substantial direct effects on the States, on the relationship between the national government and the States, or on the distribution of power and responsibilities among various levels of government. Therefore, it is determined that this final rule does not have federalism implications under Executive Order 13132.

The FAA has determined that this regulation only involves an established body of technical regulations for which frequent and routine amendments are necessary to keep them operationally current, is non-controversial and unlikely to result in adverse or negative comments. It, therefore, (1) is not a ''significant regulatory action'' under Executive Order 12866; (2) is not a ''significant rule'' under DOT Regulatory Policies and Procedures (44 FR 11034; February 26, 1979); and (3) does not warrant preparation of a Regulatory Evaluation as the anticipated impact is so minimal since this is a routine matter that will only affect air traffic procedures and air navigation, it is certified that this rule, when promulgated, will not have a significant economic impact on a substantial number of small entities under the criteria of the Regulatory Flexibility Act.

The FAA's authority to issue rules regarding aviation safety is found in Title 49, of the United States Code, subtitle I, section 106 describes the authority of the FAA Administrator. Subtitle VII, Aviation Programs, describes in more detail the scope of the agency's authority.

This rulemaking is promulgated under the authority described in subtitle VII, part A, subpart I, section 40103. Under that section, the FAA is charged with prescribing regulations to assign the use of airspace necessary to ensure the safety of aircraft and the efficient use of airspace. This regulation is within the scope of that authority as it establishes Class E5 airspace near Long Prairie, MN.

List of Subjects in 14 CFR Part 71

Airspace, Incorporation by reference, Navigation (Air).

Adoption of the Amendment

■ In consideration of the foregoing, the Federal Aviation Administration amends 14 CFR part 71 as follows:

PART 71—DESIGNATION OF CLASS A, B, C, D, AND E AIRSPACE AREAS; AIR TRAFFIC SERVICE ROUTES; AND REPORTING POINTS

■ 1. The authority citation for part 71 continues to read as follows:

Authority: 49 U.S.C. 106(g); 40103; 40113, 40120, E.O. 10854, 24 FR 9565, 3 CFR, 1959–1963 Comp., p 389.

71.1 [Amended]

■ 2. The incorporation by reference in 14 CFR 71.1 of Federal Aviation Administration Order 7400.9R, Airspace Designation and Reporting Points, signed August 15, 2007, and effective September 15, 2007, is amended as follows:

Paragraph 6002 Class E5 airspace areas extending upward from 700 feet above the surface of the earth.

* * * * *

AGL MN Class E5 Long Prairie, MN [New]

Todd Field

(Lat. 45°53′55″ N., long. 94°52′26″ W.)

That airspace extending upward from 700 feet above the surface within a 6.3-mile radius of Todd Field. This Class E5 airspace is effective during specific dates and times established in advance by Notice to Airmen. The effective date and time will thereafter be continuously published in the Airport/Facility Directory.

* * * * *

Issued in Forth Worth, TX, on January 10, 2008.

Donald R. Smith,

Manager, System Support Group, ATO Central Service Center.

[FR Doc. 08–430 Filed 2–1–08; 8:45 am]

BILLING CODE 4910–13–M

POSTAL REGULATORY COMMISSION

39 CFR Part 3020

[Docket No. RM2007–1; Order No. 43]

Administrative Practice and Procedure, Postal Service; Corrections

AGENCY: Postal Regulatory Commission.

ACTION: Correcting amendments.

SUMMARY: The Postal Regulatory Commission published a document in the **Federal Register** on November 9, 2007 (72 FR 63662), adopting new rules. That document inadvertently misidentified, in section 3020.91, the length of time for the Postal Service to file a notice of certain types of corrections to product descriptions in the Mail Classification Schedule and mischaracterized, in section 3020.93, the scope of a product list. This document corrects the final regulations by revising these sections.

DATES: Effective on December 10, 2007.

FOR FURTHER INFORMATION CONTACT: Stephen L. Sharfman, General Counsel, 202–789–6820 and *stephen.sharfman@prc.gov*.

SUPPLEMENTARY INFORMATION: This document summarizes the Commission's Notice of Errata issued on January 24, 2008, addressing two errors in final regulations. Review of regulations regarding Docket No. RM2007–1 (Order No. 43) indicates a

need for revision of two sections to conform to the Commission's Order No. 43, October 29, 2007, which adopted those regulations.

The first affects 39 CFR 3020.91. As published, this section states that the Postal Service is to file a notice of a correction in product lists no later than 30 days prior to the effective date of the proposed change. The correct timeframe for filing such notices is no later than 15 days.

The second revision affects 39 CFR 3020.93. As published, this section includes the phrase ''market dominant'' before ''product description''. The phrase ''market dominant'' should not have been used as a qualifier.

As published, the final regulations contain errors which may prove to be misleading and need to be clarified.

List of Subjects in 39 CFR Part 3020

Administrative practice and procedure; Postal Service.

■ Accordingly, 39 CFR part 3020 is corrected by making the following correcting amendments:

PART 3020—PRODUCT LISTS

■ 1. The authority citation for part 3020 continues to read as follows:

Authority: 39 U.S.C. 503; 3622; 3631; 3642; 3682.

■ 2. Revise § 3020.91 to read as follows:

§ 3020.91 Modification.

The Postal Service shall submit corrections to product descriptions in the Mail Classification Schedule that do not constitute a proposal to modify the market dominant product list or the competitive product list as defined in § 3020.30 by filing notice of the proposed change with the Commission no later than 15 days prior to the effective date of the proposed change.

■ 3. Revise paragraph (b) of § 3020.93 to read as follows:

§ 3020.93 Implementation.

* * * * *

(b) The Commission's finding that changes to the product descriptions are not inconsistent with 39 U.S.C. 3642 is provisional and subject to subsequent review.

Steven W. Williams,

Secretary.

[FR Doc. E8–1890 Filed 2–1–08; 8:45 am]

BILLING CODE 7710–FW–P

ENVIRONMENTAL PROTECTION AGENCY

40 CFR Part 52

[EPA–R05–OAR–2007–1085; FRL–8519–1]

Final Rule; Ohio; Revised Oxides of Nitrogen (NO_X) Regulation, Phase II, and Revised NO_X Trading Rule

AGENCY: Environmental Protection Agency (EPA).

ACTION: Direct final rule.

SUMMARY: EPA is approving a revision to the Ohio oxides of nitrogen (NO_X) State Implementation Plan (SIP) containing provisions which control emissions of NO_X from large internal combustion (IC) engines, makes corrections to typographical errors in the previously approved Phase I NO_X SIP, and expands the definition of NO_X budget unit. This approval requires reductions in NO_X emissions from large IC engines, based on cost-effective control measures. Large IC engines are defined in the State rule as emitting one ton or more of NO_X per day during the ozone season. The Ohio NO_X SIP Call IC engine inventory is based on the inventory of IC engines compiled by EPA as part of the NO_X SIP Call rule. Including these engines in the Ohio plan reduces NO_X to a level at which the State will meet its ozone season NO_X budget. EPA is approving the State's revision because it satisfies the Federal requirements for Phase II sources and demonstrates that these rules will meet the Phase II budget for Ohio.

DATES: This direct final rule is effective April 4, 2008 without further notice, unless EPA receives adverse comment by March 5, 2008. If EPA receives such comments, it will publish a timely withdrawal of the direct final rule in the **Federal Register** and inform the public that the rule will not take effect.

ADDRESSES: Submit your comments, identified by Docket ID No. EPA–R05–OAR–2007–1085, by one of the following methods:

I. *http://www.regulations.gov:* Follow the on-line instructions for submitting comments.

II. *E-mail: mooney.john@epa.gov.*

III. *Fax:* (312) 886–5824

IV. *Mail:* Reference EPA–R05–OAR–2007–1085 Docket, Air Programs Branch, U.S. Environmental Protection Agency, (AR–18J), 77 West Jackson Boulevard, Chicago, Illinois 60604.

V. *Hand Delivery or Courier:* John Mooney, Chief, Criteria Pollutant Section, Air Programs Branch, U.S. Environmental Protection Agency (AR–18J), 77 West Jackson Boulevard, Chicago, Illinois 60604. Such deliveries are only accepted during the Regional Office's normal hours of operation. The Regional Office's official hours of business are Monday through Friday, 8:30 to 4:30, excluding federal holidays.

Instructions: Direct your comments to Docket ID No. ''EPA–R05–OAR–2007–1085''. EPA's policy is that all comments received will be included in the public docket without change and may be made available online at *www.regulations.gov,* including any personal information provided, unless the comment includes information claimed to be Confidential Business Information (CBI) or other information whose disclosure is restricted by statute. Do not submit through *www.regulations.gov* or e-mail, information that you consider to be CBI or otherwise protected. The *www.regulations.gov* Web site is an ''anonymous access'' system, which means EPA will not know your identity or contact information unless you provide it in the body of your comment. If you send an e-mail comment directly to EPA without going through *www.regulations.gov,* your e-mail address will be automatically captured and included as part of the comment that is placed in the public docket and made available on the Internet. If you submit an electronic comment, EPA recommends that you include your name and other contact information in the body of your comment and with any disk or CD–ROM you submit. If EPA cannot read your comment due to technical difficulties and cannot contact you for clarification, EPA may not be able to consider your comment. Electronic files should avoid the use of special characters and any form of encryption and should be free of any defects or viruses. For additional information about EPA's public docket visit the EPA Docket Center homepage at *http://www.epa.gov/epahome/dockets.htm.*

Docket: All documents in the electronic docket are listed in the *www.regulations.gov* index. Although listed in the index, some information is not publicly available, i.e., CBI or other information whose disclosure is restricted by statute. Certain other material, such as copyrighted material, is not placed on the Internet and will be publicly available only in hard copy form. Publicly available docket materials are available either electronically at *www.regulations.gov* or in hard copy at the Environmental Protection Agency, Region 5, Air and Radiation Division, 77 West Jackson Boulevard, Chicago, Illinois 60604. EPA requests that if at all possible, you

contact the person listed in the **FOR FURTHER INFORMATION CONTACT** section to schedule your inspection. The Regional Office's official hours of business are Monday through Friday, 8:30 to 4:30, excluding Federal holidays.

FOR FURTHER INFORMATION CONTACT: John Paskevicz, Engineer, Criteria Pollutant Section, Air Programs Branch (AR–18J), Environmental Protection Agency, Region 5, 77 West Jackson Boulevard, Chicago, Illinois 60604. The telephone number is (312) 886–6084. Mr. Paskevicz can also be reached via electronic mail at: *paskevicz.john@epa.gov*.

SUPPLEMENTARY INFORMATION: Throughout this document, ''we,'' ''us,'' and ''our'' refer to the U.S. Environmental Protection Agency.

Table of Contents

I. Does this rule apply to me?
II. The State's Submittal
A. Why did the State submit this revision and how does it fit in with the State's NO_X plan?
B. What did Ohio submit?
III. EPA's Evaluation and Final Action
A. Is the Ohio submittal complete?
B. Did the State submit the revision in time to meet EPA requirements?
C. Does the Ohio submittal meet the evaluation criteria?
IV. What action is EPA taking today?
V. Statutory and Executive Order Reviews

I. Does this rule apply to me?

This rule applies to owners or operators of any large NO_X SIP Call stationary internal combustion engines as defined in the State rule and located in the State of Ohio. A ''large NO_X SIP Call engine'' means any engine in the Ohio NO_X SIP Call engine inventory emitting more than one ton of NO_X emissions per control period day in 1995. Ohio used the EPA 1995 baseline inventory list that contained the NO_X emission units for all of the States including Ohio. A search of that list shows that there are 12 large lean burn IC engines, as described by EPA, in Ohio. These engines are located at pipeline pumping stations and are required by State rule to meet the NO_X SIP Call Phase II budget. Compliance plans are expected to show that control of these 12 units will bring about reductions of NO_X to meet the portion of the NO_X budget associated with these units.

II. The State's Submittal

A. Why did the State submit this revision and how does it fit in with the State's NO_X plan?

In order to reduce ozone transport in the eastern part of the United States, the EPA issued the NO_X SIP Call on October 27, 1998, (63 FR 57356) to reduce emissions of NO_X, a precursor of ozone. Subsequent litigation affecting this SIP Call prompted the EPA to divide the SIP Call into two phases. The majority of the SIP Call was upheld by the D.C. Circuit Court of Appeals and these requirements became Phase I of the SIP Call. A second phase of the SIP Call was necessary to address the portions of the October 1998 action which were vacated or remanded to EPA by the Court. EPA published the final Phase II Rule on April 21, 2004 (69 FR 21604). The plans that cover the portion of the rule re-issued after the Court decision are known as ''Phase II'' SIPs and were due to be submitted to EPA on April 1, 2005, with full compliance by May 1, 2007. The Ohio plan revision was received by EPA on June 16, 2005. Additional information regarding compliance plan approval by Ohio was provided on November 7, 2006.

In addition to the Phase II rule, EPA published a draft example rule on September 15, 2004, for States to use as a model for their State rules. A copy of this draft example rule is available at the Web site: *http://www.epa.gov/ttn/oarpg/t1/meta/m25546.html.* Coincidental with the draft example rule EPA provided a list of questions and answers for use by States in response to some common questions expressed by the regulated community. (*http://www.epa.gov/ttn/oarpg/t1/reports/23814qnaasfin.pdf*) The EPA Phase II rule identifies the incremental budget for Ohio which the State is expected to comply with in order to fulfill the requirements of the NO_X SIP Call.

B. What did Ohio submit?

Ohio's revision contains rules which add IC engines to the list of affected sources of NO_X. The revision also includes some language changes to the original NO_X SIP, and also changes in definitions and the addition of specific language for cogeneration units. These changes are located in OAC 3745–14–01, –05, and –12, and Appendix B.

OAC 3745–14–01 was changed in the areas of Definitions and Applicability. Ohio made changes in the Definitions section addressing continuous emissions monitoring, linking the language to Ohio rule 3745–14–08, and 40 CFR part 75, and expanded the language in the state's rule pertaining to automated data acquisition and handling system and NO_X monitoring. An additional list of definitions was added pertaining to IC engines, clearly defining to which source types this rule applies. In the applicability portion of the rule a separate section addressing (and including) cogeneration units was added.

A number of minor wording revisions were made in OAC 3745–14–05, relating to Ohio's incorporation by reference of EPA's technical amendments to the NO_X SIP Call Rule and ASTM standard test methods for several pollutants including NO_X. This State rule revision includes Appendix B to the chapter, and lists the non-electric generating unit's (non-EGU) annual NO_X allowance allocations. This appendix contains corrections to errors on the list made in the point identification portion of the State's Appendix B for non-EGUs.

OAC 3745–14–12, Stationary internal combustion engines, is an entirely new rule which applies to large NO_X SIP Call engines as defined in OAC 3745–14–01. The rule lists the requirements for a compliance plan, and the requirements for monitoring, recordkeeping and reporting of data.

III. EPA's Evaluation and Final Action

A. Is the Ohio submittal complete?

Yes, Ohio submitted a complete SIP revision. The revision is complete from the point of view of satisfying the Ohio state code for submitting State plans to EPA. And the revision is complete based on the requirements of 40 CFR part 51, Appendix V.

This revision augments a number of earlier revisions to the Ohio NO_X SIP Call. On August 5, 2003, 68 FR 46089, EPA published a final rule giving conditional approval of the Ohio NO_X SIP Call plan, following receipt of a written commitment from Ohio to revise the flow control date.

On June 27, 2005, 70 FR 36845, EPA published a final rule approving the Ohio revision which excludes carbon monoxide boilers at fluid catalytic cracking units in oil refineries from Ohio's NO_X trading program.

B. Did the State submit the revision in time to meet EPA requirement?

The State Phase II SIP was required to be submitted one year following the approval by the EPA Administrator establishing the final full NO_X budgets for States subject to the NO_X SIP Call. The final full NO_X budget rule was signed by the administrator on April 1, 2004. (69 FR 21604) The revised State plans were due on April 1, 2005. The Ohio plan was received by EPA on June 16, 2005.

C. Does the Ohio submittal meet the evaluation criteria?

EPA evaluated the Ohio plan submittal based on the guidance EPA

provided to states affected by the NO_X SIP Call. We are satisfied that the plan submitted by Ohio meets this guidance. EPA published an example rule (EPA guidance) illustrating a means by which States can meet the NO_X SIP Call Phase II requirements. The example rule contained: A set of new definitions associated with stationary internal combustion engines; a description of a compliance plan containing provisions applicable to each owner/operator of a large IC engine; and a detailed list of reporting, monitoring, and recordkeeping requirements with which an owner/operator must comply. We reviewed the Ohio Phase II submittal against our example rule and find the Ohio IC engine rule to be consistent with applicable elements of the EPA example rule.

Ohio also included an incorporation by reference (in OAC 3745–14–01) of: (1) A standard test method for determining NO_X concentrations in emissions from natural gas-fired reciprocating engines, combustion turbines, boilers, and process heaters using portable analyzers; (2) Technical Amendment to the Finding of Significant Contribution and Rulemaking for Certain States for Purposes of Reducing Regional Transport of Ozone, (65 FR 11222, March 2, 2000); and, (3) Interstate Ozone Transport Response to Court Decisions on the NO_X SIP Call, NO_X SIP Call Technical Amendments, and Section 126 Rules (69 FR 21603, April 21, 2004.)

IV. What action is EPA taking?

EPA is approving the revision to the Ohio NO_X SIP Call which adds provisions affecting large stationary internal combustion engines. We are also approving a number of changes to the State's plan including the revised budget demonstration for IC engines, rule changes affecting continuous emissions monitoring, and additional language affecting cogeneration units.

V. Statutory and Executive Order Reviews

Under Executive Order 12866 (58 FR 51735, October 4, 1993), this action is not a ''significant regulatory action'' and therefore is not subject to review by the Office of Management and Budget. For this reason, this action is also not subject to Executive Order 13211, ''Actions Concerning Regulations That Significantly Affect Energy Supply, Distribution, or Use'' (66 FR 28355, May 22, 2001). This action merely approves State law as making progress toward meeting Federal requirements and would impose no additional requirements beyond those imposed by State law. Accordingly, the Administrator certifies that this rule would not have a significant economic impact on a substantial number of small entities under the Regulatory Flexibility Act (5 U.S.C. 601 *et seq.*). Because this action approves pre-existing requirements under State law and would not impose any additional enforceable duty beyond that required by State law, it does not contain any unfunded mandate or significantly or uniquely affect small governments, as described in the Unfunded Mandates Reform Act of 1995 (Pub. L. 104–4).

This rule also does not have tribal implications because it would not have a substantial direct effect on one or more Indian tribes, on the relationship between the Federal Government and Indian tribes, or on the distribution of power and responsibilities between the Federal Government and Indian tribes, as specified by Executive Order 13175 (65 FR 67249, November 9, 2000). This action also does not have Federalism implications because it would not have substantial direct effects on the States, on the relationship between the national government and the States, or on the distribution of power and responsibilities among the various levels of government, as specified in Executive Order 13132 (64 FR 43255, August 10, 1999). This action approves a State rule making progress toward implementing a Federal standard. It does not alter the relationship or the distribution of power and responsibilities established in the Clean Air Act. This rule also is not subject to Executive Order 13045 ''Protection of Children from Environmental Health Risks and Safety Risks'' (62 FR 19885, April 23, 1997), because it would approve a State rule making progress toward implementing a Federal Standard.

In reviewing SIP submissions, EPA's role is to approve State choices, provided that they meet the criteria of the Clean Air Act. In this context, in the absence of a prior existing requirement for the State to use voluntary consensus standards (VCS), EPA has no authority to disapprove a SIP submission for failure to use VCS. It would thus be inconsistent with applicable law for EPA, when it reviews a SIP submission, to use VCS in place of a SIP submission that otherwise satisfies the provisions of the Clean Air Act. Thus, the requirements of section 12(d) of the National Technology Transfer and Advancement Act of 1995 (15 U.S.C. 272 note) do not apply. This rule would not impose an information collection burden under the provisions of the Paperwork Reduction Act of 1995 (44 U.S.C. 3501 *et seq.*).

The Congressional Review Act, 5 U.S.C. section 801 *et seq.*, as added by the Small Business Regulatory Enforcement Fairness Act of 1996, generally provides that before a rule may take effect, the agency promulgating the rule must submit a rule report, which includes a copy of the rule, to each House of the Congress and to the Comptroller General of the United States. EPA will submit a report containing this rule and other required information to the U.S. Senate, the U.S. House of Representatives, and the Comptroller General of the United States prior to publication of the rule in the **Federal Register**. A major rule cannot take effect until 60 days after it is published in the **Federal Register**. This action is not a ''major rule'' as defined by 5 U.S.C. 804(2).

Under section 307(b)(1) of the Clean Air Act, petitions for judicial review of this action must be filed in the United States Court of Appeals for the appropriate circuit by April 4, 2008. Filing a petition for reconsideration by the Administrator of this final rule does not affect the finality of this rule for the purposes of judicial review nor does it extend the time within which a petition for judicial review may be filed, and shall not postpone the effectiveness of such rule or action. This action may not be challenged later in proceedings to enforce its requirements. (See section 307(b)(2).)

List of Subjects in 40 CFR Part 52

Environmental protection, Air pollution control, Incorporation by reference, Intergovernmental relations, Oxides of nitrogen, Reporting and recordkeeping requirements.

Dated: January 11, 2008.

Gary Gulezian,

Acting Regional Administrator, Region 5.

■ For the reasons stated in the preamble, part 52, chapter I, of title 40 of the Code of Federal Regulations is amended as follows:

PART 52—[AMENDED]

■ 1. The authority citation for part 52 continues to read as follows:

Authority: 42 U.S.C. 7401 *et seq.*

Subpart KK—Ohio

■ 2. Section 52.1870 is amended by adding paragraph (c)(141) to read as follows:

§ 52.1870 Identification of plan.

* * * * *

(c) * * *

(141) Ohio Environmental Protection Agency, on June 16, 2005, submitted amendments to the State Implementation Plan to control nitrogen oxide emissions from internal combustion engines in new rule Ohio Administrative Code (OAC) 3745–14–12. This rule adds stationary internal combustion engines to the list of sources in the Ohio NO_X SIP Call emission reduction program. Also, OAC 3745–14–01, General Provisions, is amended. This rule contains definitions used for the nitrogen oxides rules, expands the definition of NO_X budget unit, adds definitions for the internal combustion engine rule, amends definition associated with continuous emissions monitoring, and makes corrections to typographical errors. OAC 3745–14–05 Portions of this rule are amended to correctly line up with the changes made in the definitions section of the NO_X plan. Typographical errors are also corrected.

(i) *Incorporation by reference.* The following sections of the Ohio Administrative Code (OAC) are incorporated by reference.

(A) OAC 3745–14–01, General Provisions, effective on May 07, 2005.

(B) OAC 3745–14–05, NO_X Allowance Allocations, effective on May 07, 2005.

(C) OAC 3745–14–12, Stationary Internal Combustion Engines, effective on May 7, 2005.

[FR Doc. E8–1797 Filed 2–1–08; 8:45 am]

BILLING CODE 6560–50–P

DEPARTMENT OF THE INTERIOR

Bureau of Land Management

43 CFR Part 3130

[WO–310–1310–PP–241A]

RIN 1004–AD78

Oil and Gas Leasing; National Petroleum Reserve—Alaska

AGENCY: Bureau of Land Management, Interior.

ACTION: Final rule.

SUMMARY: The Bureau of Land Management (BLM) is amending its regulations at 43 CFR part 3130 pertaining to oil and gas resources in the National Petroleum Reserve—Alaska (NPR–A). The rule makes oil and gas administrative procedures in NPR–A consistent with Section 347 of the Energy Policy Act of 2005. The rule amends the administrative procedures for the efficient transfer, consolidation, segregation, suspension, and unitization of Federal leases in the NPR–A. The rule also changes the way the BLM processes lease renewals, lease extensions, lease expirations, lease agreements, exploration incentives, lease consolidations, and termination of administration for conveyed lands in the NPR–A. Finally, the rule makes the NPR–A regulation on additional bonding consistent with the regulations that apply outside of the NPR–A.

DATES: This rule is effective March 5, 2008.

ADDRESSES: Further information or questions regarding this final rule should be addressed in writing to the Director (WO–300), Bureau of Land Management, 1849 C St., NW., Washington DC 20240.

FOR FURTHER INFORMATION CONTACT: Greg Noble, Chief, Energy Branch, the BLM's Alaska State Office at (907) 267–1429 or Ian Senio at the BLM's Division of Regulatory Affairs at (202) 452–5049. Persons who use a telecommunications device for the deaf (TDD) may contact these persons through the Federal Information Relay Service (FIRS) at 1–800–877–8339, 24 hours a day, 7 days a week, to leave a message or question with the above individuals. You will receive a reply during normal business hours.

SUPPLEMENTARY INFORMATION:

I. Background
II. Discussion of the Final Rule and Responses to Comments on the Proposed Rule
III. Procedural Matters

I. Background

Part 3130 of 43 Code of Federal Regulations (CFR) contains the regulations that apply to oil and gas leasing in the NPR–A authorized under the Naval Petroleum Reserves Production Act of 1976, as amended (NPRPA), (42 U.S.C. 6501 *et seq.*).

On April 11, 2002 (67 FR 17866), the BLM published a final rule that applies to operations under Federal oil and gas leases in NPR–A and added a new subpart allowing the formation of oil and gas units in the NPR–A.

On August 8, 2005, the President signed the Energy Policy Act of 2005 (EPAct of 2005) (Pub. L. 109–58). Section 347 of the EPAct of 2005 amends the NPRPA. These amendments require that the BLM revise our existing regulations on:

(A) Lease extensions and renewals;

(B) Participation in oil and gas units;

(C) Production allocation;

(D) Termination of administration of conveyed mineral estate; and

(E) Waiver, suspension, and reduction of rental or minimum royalty or reduction of the royalty rate.

On May 22, 2007, the BLM published a proposed rule to amend existing regulations pertaining to oil and gas resources in the NPR–A (72 FR 28636). This final rule is substantially the same as the proposed rule. However, the final rule differs in some respects from the proposed rule. Some changes are the result of public comment on the proposed rule, and others are to make the rule clearer and more consistent with the EPAct of 2005.

II. Discussion of the Final Rule and Responses to Comments on the Proposed Rule

Section 3130.0–3 Authority

This final rule amends the authority section by adding a reference to the Energy Policy Act of 2005 (Pub. L.109–58) in a new paragraph (d). We received no substantive comment on this section and it remains as proposed.

Section 3130.0–5 Definitions

The EPAct of 2005 uses three terms that we also use in this final rule. All three terms are used in the provisions having to do with the methodology for allocating production among committed tracts in a unit in the NPR–A (see section 3137.23(g)). If the unit included non-Federal land, the methodology must take into account reservoir heterogeneity and area variation in reservoir producibility. This section of the rule defines the terms ''production allocation methodology,'' ''reservoir heterogeneity,'' and ''variation in reservoir producibility'' in a manner consistent with normal usage in the field. In the final rule we revised the definitions of ''production allocation methodology'' and ''variation in reservoir producibility'' based on a commenter's suggestions. The definition of ''reservoir heterogeneity'' remains as proposed.

One commenter suggested modifying the definition of ''production allocation methodology'' to make it clear that all production from a participating area would be allocated to committed tracts forming the participating area. We agree that the suggested modification provides added clarity and in the final rule revised the definition based on this comment.

The commenter also suggested changing the definition for ''variation in reservoir producibility'' by deleting the sentence, ''This can be dependent on where the well penetrates the reservoir'', and replacing it with ''These differences can result from variations in the thickness of the reservoir, porosity, and the amount of connected pore space.'' We accept the comment and

have revised the definition in the final rule.

Section 3133.3 Under what circumstances will BLM waive, suspend, or reduce the rental or minimum royalty or reduce the royalty rate on my NPR–A lease?

The EPAct of 2005 addresses the circumstances under which the BLM would consider waiving, suspending, or reducing the rental or minimum royalty or reducing the royalty rate on an NPR–A lease. This rule amends the existing regulations by revising paragraphs (a) and (a)(2) to state that the BLM could waive, suspend, or reduce the rental or minimum royalty or reduce the royalty rate on an NPR–A lease if it was necessary to promote development or the BLM determined that the lease could not be successfully operated under the terms of the lease.

Also, as a result of changes made to the NPRPA by the EPAct of 2005, this rule changes existing paragraph (b) by requiring the BLM to consult with the State of Alaska and the North Slope Borough within 10 days of receiving an application for waiver, suspension, or reduction of rental or minimum royalty or reduction of the royalty rate. Under new paragraph (b), the BLM would not approve an application for these benefits (under § 3133.4) until at least 30 days after the consultation is completed.

This rule adds a new paragraph (c) to this section. Under this new paragraph, if a lease included land that was made available for acquisition by a regional corporation (as defined in 43 U.S.C. 1602) under Section 1431(o) of the Alaska National Interest Lands Conservation Act (16 U.S.C. 3101 *et seq.*), the BLM would only approve a waiver, suspension, or reduction of rental or minimum royalty or a reduction of the royalty rate if the regional corporation concurred. This change is necessary because the EPAct of 2005 requires concurrence from the regional corporation prior to approval of these actions.

One commenter expressed support for the changes in section 3133.3 that allow the BLM to waive, suspend, or reduce the rental, royalty, or minimum royalty on an NPR–A lease if the BLM believes it is needed to promote development. The commenter believes that some exploration and development incentives will be necessary for the successful development of the NPR–A.

In the final rule we revised sections 3133.3 and 3133.4 to be consistent with the NPRPA and the EPAct of 2005. Both Acts specifically grant the Secretary the authority to waive, suspend, or reduce the rental or minimum royalty, or to reduce the royalty rate on NPR–A leases. Neither Act grants the Secretary authority to waive or suspend the royalty on NPR–A leases, as the current and proposed regulations state, and the final rule makes this clear.

Section 3133.4 How do I apply for a waiver, suspension or reduction of rental or minimum royalty or a reduction of the royalty rate for my NPR–A lease?

Under this rule, existing paragraphs (a)(6) and (a)(7) have new requirements that an applicant who is applying for a waiver, suspension, or reduction of rental or minimum royalty or a reduction of the royalty rate demonstrate that the waiver, suspension, reduction of the rental or minimum royalty or a reduction of the royalty rate encourages the greatest ultimate recovery of oil or gas or it is in the interest of conservation, and all the facts demonstrate that the applicant cannot successfully operate the lease under its terms. These new requirements are the result of changes that the EPAct of 2005 made to NPRPA.

This rule also makes a minor editorial change to existing paragraph (a)(6) (new paragraph (a)(7)) by replacing ''can't'' with ''cannot.''

In addition to the revision discussed in section 3133.3, in the final rule we also revised section 3133.4(a)(5) by adding language from previous section 3133.4(a)(7) concerning providing to the BLM, as part of the application, the amount of overriding royalty and payments out of production or other similar interests applicable to the lease. While not specifically listed in the proposed rule, this information would have been required under section (a)(5) or (a)(8) of the proposed rule, but we have included it in the final rule to make it clear that this information is needed in order for BLM to complete an evaluation of the ''expenses and costs'' of operating the lease. The changes are not significant and do not change the meaning or effect of the regulations. We have also made a grammatical correction to proposed sections 3133.4(a)(6) and (a)(7) by deleting the second ''that'' in the first sentence of each section. These edits have no substantive effect on the regulation.

Section 3134.1–2 Additional Bonds

Changes to the existing paragraph (a) on additional bonding allow the BLM to require additional bonding for all NPR–A leases, not only leases in special areas, using the criteria of section 3104.5(b) of the existing regulations. This rule adds a cross reference to existing section 3104.5(b), which allows the BLM to require an increase in the amount of any NPR–A lease bond if the BLM determined that the operator posed a risk due to factors, including, but not limited to:

(A) A history of previous violations;

(B) A notice from the Minerals Management Service (MMS) that there are uncollected royalties due; or

(C) The total cost of plugging existing wells and reclaiming lands exceeds the present bond amount based on the estimates determined by the BLM.

The previous regulations only allow the BLM to increase the bonding amount in the Special Areas as defined in the NPRPA. This rule allows the BLM to increase the bonding amount on all NPR–A leases and would make the NPR–A oil and gas regulations consistent with the regulations that currently apply to Federal oil and gas leases outside of the NPR–A We received no substantive comment on this section and it remains as proposed.

Section 3135.1–4 Effect of Transfer of a Tract

This rule revises paragraph (a) of this section to make the existing provisions clearer. This would not change the meaning or intent of this paragraph.

This rule revises the provisions on segregation in paragraph (b) of this section by changing the standard that the BLM applies when determining if a segregated lease should continue in full force and effect. The existing standard is that a segregated lease remains in full force and effect if the BLM determines that oil and gas is being produced in paying quantities from that segregated portion of the lease area or so long as drilling or well reworking operations, either actual or constructive, are being conducted. The new standard is that a lease continues in full force and effect as long as the activities on the segregated lease support lease extension under the regulations in section 3135.1–5. That section is revised by this rule as well and it is discussed further below. We received no substantive comment on this section and it remains as proposed.

Section 3135.1–5 Extension of Lease

Existing regulations on lease extensions require that the BLM extend the term of a lease beyond its primary term so long as:

(A) Oil or gas is produced from the lease in paying quantities; or

(B) Drilling or reworking operations, actual or constructive, as approved by the BLM, are being conducted on the lease.

This rule adds a new condition to paragraph (a) of this section under

which the BLM would grant a lease extension in cases where the BLM has determined in writing that oil or gas is capable of being produced in paying quantities from the lease.

The rule amends existing paragraph (a) by breaking it into subparagraphs so that it is easier to read. The last sentence of paragraph (a) is rewritten to make it clear that the BLM approves drilling or reworking operations, actual or constructive, rather than the Secretary.

This rule also adds a new paragraph (b) to this section that explains that NPR–A leases expire on the 30th anniversary of the original issuance date of the lease unless oil or gas is being produced in paying quantities from the lease. The new paragraph further explains that if a lease contains a well that is capable of production, but the lease does not produce the oil or gas due to circumstances beyond the lessee's control, the lessee may apply for a suspension under section 3135.2. If the BLM approved the suspension, the lease would not expire on the 30th anniversary of the original issuance date of the lease. These changes are in response to changes to NPRPA made by the EPAct of 2005.

This rule amends what is now paragraph (c) (paragraph (b) of the existing regulation) by making it clear that the directional wells discussed in that paragraph are the BLM-approved directional wells. This is a clarification of existing practice.

One commenter supported the proposed change to this section that provides for lease extensions based on a well that is capable of producing oil or gas in paying quantities. Another commenter suggested revising section 3135.1–5 to make it clear that leases that are part of a unit can be extended as described in existing subpart 3137. While it is true that leases committed to a unit can be extended under sections 3137.10 and 3137.111, we did not modify final section 3135.1–5 as the commenter suggested. We believe, as the commenter implies, that existing regulations address the issue of extensions of leases committed to a unit. The commenter was also concerned about how leases that are only partially within a unit may be extended. All portions of a lease have the same expiration date and benefit equally from extensions. If a lease is segregated, the segregated portion of the lease would likely have different lease terms than the ''parent'' lease. The regulations do not address segregation of leases as a result of unitization. If segregation is appropriate it is addressed in the unit agreement. If segregation occurs, sections 3135.1–4 through 3135.1–6 describe how the segregated, non-unit lease may be extended or renewed.

Section 3135.1–6 Lease Renewal

This rule would add a new section on lease renewals to the existing NPR–A regulations that is based on changes the EPAct of 2005 made to the NPRPA. The EPAct of 2005 and this section address lease renewals in two parts: those leases that have a discovery of hydrocarbons and those leases that do not have a discovery.

With a Discovery. Under this section, at any time after the fifth year of the primary term of a lease, the BLM could approve a 10-year lease renewal for a lease on which there has been a well drilled and a discovery of hydrocarbons, even if the BLM had determined that the well is not capable of producing oil or gas in paying quantities. Under this section the BLM must receive the lessee's application for lease renewal no later than 60 days prior to the expiration of the primary term of the lease.

This section requires that the renewal application provide evidence, and a certification by the lessee, that the lessee has discovered oil or gas on the leased lands in such quantities that a prudent operator would hold the lease for potential future development.

Under this section, the BLM approves applications if it determines that a discovery was made and that a prudent operator would hold the lease for future development. The BLM may approve the lease renewal on the condition that the lessee drills one or more additional wells or acquires and analyzes more well data, seismic data, or geochemical survey data prior to the end of the primary term of the lease.

Under this section lease renewals are effective on the day following the end of the primary term of the lease.

Without a Discovery. Under this section, at any time after the fifth year of the primary term of a lease, the BLM could approve an application for a 10-year lease renewal for a lease on which there has not been a discovery of oil or gas. The BLM must receive the lessee's application no later than 60 days prior to the expiration of the primary term of the lease.

Under this rule, the renewal application must:

(A) Provide sufficient evidence that the lessee has diligently pursued exploration that warrants continuation of the lease with the intent of continued exploration or future potential development of the leased land. The application must show the lessee has drilled one or more wells or acquired seismic or geochemical data indicating a probability of future success, and the application must include a plan for future exploration; or

(B) Show that all or part of the lease is part of a unit agreement covering a lease that qualifies for renewal without a discovery and that the lease has not been previously contracted out of the unit.

Under this section the BLM approves renewal applications if it determines that the application satisfied the requirements of paragraph (b)(2)(A) or (B) of this section. If the BLM approved the application for lease renewal, the applicant would be required to submit to the BLM a fee of $100 per acre within 5 business days of receiving notification of the renewal approval.

Lease renewals are effective on the day following the end of the primary term of the lease. The BLM may approve the lease renewal on the condition that the lessee drills one or more additional wells or acquires and analyzes more well data, seismic data, or geochemical survey data prior to the end of the primary term of the lease.

The renewed lease is subject to the terms and conditions applicable to new oil and gas leases issued under the Integrated Activity Plan in effect on the date that the BLM issues the decision to renew the lease.

One commenter supported the renewal provisions in section 3135.1–6, but suggested defining the term ''discovery'' and offered a definition. We did not define the term ''discovery'' in the final rule based on this comment. We believe section 3135.1–6(a)(2) adequately describes what is necessary for the BLM to consider a request for lease renewal ''with a discovery.'' We did revise this section to indicate that the discovery well(s) could be drilled by the lessee or the operator. Under this final rule, discovery wells must be drilled on the lease after lease issuance. This makes it clear that the wells can be drilled by the lessee as operator or another operator designated by the lessee.

Section 3135.1–7 Consolidation of Leases

This rule revises the consolidation provisions in existing regulations having to do with the term of a consolidated lease. Under the existing regulations, the term of a consolidated lease is extended beyond the primary term of the lease only as long as oil or gas is produced in paying quantities or approved constructive or actual drilling or reworking operations are conducted on the lease. Under paragraph (d) of this rule, the term of consolidated leases are extended or renewed, as appropriate, under the extension or renewal

provisions of the regulations. The change recognizes that the new standards in the extension and renewal provisions of this rule apply to consolidated leases.

This rule amends paragraph (e) of the existing regulation by making it clear that the highest of the royalty or rental rates of any original lease apply to the consolidated lease. This is consistent with existing policy and practice.

In the final rule we revised section 3135.1–7(e). The proposed rule stated that ''The highest of the royalty or rental rates of any original lease shall apply to the consolidated lease.'' The final rule says ''The highest royalty and rental rates of the original leases shall apply to the consolidated lease.'' The revision makes the final rule clearer, but has no effect on the intent of the proposed rule.

Section 3135.1–8 Termination of Administration for Conveyed Lands and Segregation

This rule adds a new section concerning the waiver of administration for conveyed lands in a lease. This new section is necessary because of changes that the EPAct of 2005 made to the NPRPA. Under this new section, the BLM is required to terminate administration of any oil and gas lease if all of the mineral estate is conveyed to a regional corporation. The regional corporation would then assume the lessor's obligation to administer any oil and gas lease.

This section explains that if a conveyance of the mineral estate does not include all of the land covered by an oil and gas lease, the lease would be segregated into two leases, one of which will cover only the mineral estate conveyed. The regional corporation would assume administration of the lease within the conveyed mineral estate.

Under this rule, if the regional corporation assumed administration of a lease under paragraph (a) or (b) of this section, all lease terms, the BLM regulations, and the BLM orders in effect on the date of assumption would continue to dictate the lessee's obligations under the lease.

All such obligations will be enforceable by the regional corporation as the lessor until the lease terminates.

In a case in which a conveyance of a mineral estate described in paragraph (b) of this section does not include all of the land covered by the oil and gas lease, a person who owns part of the mineral estate covered by the lease is entitled to the revenues associated with its mineral rights, including all royalties resulting from oil and gas produced from or allocated to that part of the mineral estate. We received no substantive comment on this section and with the exception of replacing ''Arctic Slope Regional Corporation'' and ''ASRC'' with ''regional corporation'' (see the discussion of final section 3137.11 for an explanation of this change), it remains as proposed.

Section 3137.5 What terms do I need to know to understand this subpart?

This rule makes one change to the definition of ''participating area'' by replacing the word ''contain'' with the phrase ''are proven to be productive by.'' Existing regulations imply that every committed tract within a participating area must contain a well that meets the productivity criteria specified in the unit agreement. The rule makes it clear that the participating area consists of tracts that have been proven productive by a well meeting the productivity criteria, but that not every committed tract in the participating area would necessarily contain a well meeting the productivity criteria. We received no substantive comment on this section and it remains as proposed.

Section 3137.11 What consultation must BLM perform if lands in the unit area are owned by a regional corporation or the State of Alaska?

This rule adds a new section on consultation if lands in a unit are owned by a regional corporation or the State of Alaska. This section is based on changes that the EPAct of 2005 made to the NPRPA. The new section requires that if the BLM administers a unit containing tracts where the mineral estate is owned by a regional corporation or the State of Alaska, or if a proposed unit contains tracts where the mineral estate is owned by a regional corporation or the State of Alaska, the BLM will consult with and provide opportunities for participation with respect to the creation or expansion of the unit by:

(A) A regional corporation, if the unit acreage contains the regional corporation's mineral estate; or

(B) The State of Alaska, if the unit acreage contains the state's mineral estate.

The EPAct of 2005 requires that the BLM provide opportunity for participation by the State of Alaska or the regional corporation in the creation and expansion of units if those units include acreage in which the State of Alaska or the regional corporation has an interest in the mineral estate. If a proposed oil and gas unit included lands where one or both of these entities owned an interest in the mineral estate, the BLM will require the unit proponent to allow the State of Alaska and/or the regional corporation to participate in the negotiations of the unit agreement terms and the unit agreement area. This allows the State of Alaska and the regional corporation to protect their interests in the unit agreement before they commit their tracts to the unit.

Similarly, if a unit expansion is proposed, and the existing unit or the acreage included in the expansion included lands in which the State of Alaska or a regional corporation owned a mineral interest, the State of Alaska or the regional corporation will participate in the negotiation of the terms of the expanded unit and in the determination of the expanded unit area. ''Participation'' in this case does not mean sharing of revenues or production. Instead, the term means participation by the regional corporation or the state, as applicable, in the process of government oversight, through consultation, of the unit's creation or expansion.

The BLM received two comments addressing proposed section 3137.11. One commenter suggested that the BLM should incorporate language in the regulations that would give the BLM the option to request that the regional corporation and/or the State of Alaska join the unit agreement, as negotiated by the BLM, if the non-federal ownership comprises less than 10% of the surface acreage of the proposed unit. We made no changes to the final rule as a result of this comment. The EPAct of 2005 requires the BLM to provide non-federal entities opportunities for participation in the creation and expansion of units and does not condition this requirement on the percentage of lands involved.

Another commenter noted that this ''opportunity for participation'' has the potential to complicate unit negotiations, but conceded that this would be the case with any unit agreement involving multiple mineral owners. We agree that having more parties participating in negotiating the initial terms of a unit agreement or the modified terms necessary to expand a unit has the potential to complicate negotiations, but we made no changes to the final rule as a result of this comment. The EPAct of 2005 created a statutory requirement for a process that would have been necessary in almost any case. While it is the BLM's responsibility to consult with and provide non-federal mineral owners an opportunity to participate in unit negotiations involving the creation and expansion of units, it will be the responsibility of the proposed unit operator to propose terms in the unit agreement that are acceptable to the mineral interests involved if commitment of those mineral interests

is necessary for the unit operator to have effective control of unit operations. The BLM will not approve a unit unless the proposed unit operator has sufficient commitment of mineral interests to demonstrate effective control of the unitized area. At any point after the non-federal mineral owners have had the opportunity to negotiate unit terms, the BLM will review the agreement, if it is submitted by a qualified unit operator. The BLM will approve the unit agreement if the unit operator will have effective control of the unit area, it is in the interest of conservation of the natural resources, it is determined to be necessary or advisable in the public interest, it meets all mandatory terms described in these regulations, and it complies with all special conditions that may be in effect for the NPR–A.

The same commenter requested clarification as to who would be the administrator of a unit agreement and suggested that the rule state that the BLM will be the administrator of a unit if a well drilled on a BLM lease leads to the application for a unit. The location of the initial well or well leading to the application for a unit does not determine who will administer the unit and we did not revise this section as a result of this comment. If the BLM approves a unit, the BLM will be the administrator of the unit and subpart 3137 will apply. The BLM can also commit lands to a unit administered by the State and/or regional corporation as provided for in section 3137.15.

One commenter suggested that all references to ''Arctic Slope Regional Corporation'' be changed to ''regional corporation'' to conform to other references in the regulations. We agree and have made these changes in the final rule.

Section 3137.21 What must I include in an NPR–A unit agreement?

The rule makes one minor change to section 3137.21(a)(3) by replacing the word ''proposed'' with the word ''anticipated.'' Existing regulations assume that in all cases the applicant would be in a position to propose the participating area size and well locations at the application stage. The wording change recognizes that at the early application stage in the process an applicant may not be able to propose the participating area size or anticipated well locations. Using the word ''anticipated'' instead of ''proposed'' better reflects on-the-ground circumstances.

This rule adds a new paragraph (a)(5) to this section that requires unit agreements that contain the regional corporation's mineral estate or the state's mineral estate to acknowledge that, with respect to those two entities, the BLM consulted with them and provided opportunities for participation in the creation of the unit and that the BLM will consult with them and provide opportunities for participation in the expansion of the unit, as appropriate. Existing regulations do not contain this consultation requirement, which is now necessary due to changes to NPRPA made by the EPAct of 2005.

This rule also makes a minor editorial change to existing paragraph (a)(5) (renumbered paragraph (a)(6)) by adding ''that'' between ''subpart'' and ''you.''

We received one comment on section 3137.21. The commenter wanted to confirm that, by approving the unit agreement, the BLM would be simultaneously ratifying the statement required by section 3137.21(a)(5), (i.e., acknowledgement that the BLM consulted with and provided opportunities to the State of Alaska and/or the regional corporation for participation in the creation of the unit and that the BLM will consult with and provide opportunities to the State of Alaska and/or the regional corporation for participation in the expansion of the unit when state and/or regional corporation mineral estate is involved). We did not revise the final rule as a result of this comment, but we agree with the commenter that, by approving the unit agreement, the BLM would be confirming that the requirements of section 3137.21(a)(5) have been met.

Section 3137.23 What must I include in my NPR–A unitization application?

This rule adds to the existing regulation a provision requiring in the unit application a discussion of the proposed methodology for allocating production among the committed tracts. If the unit includes non-Federal oil and gas mineral estate, new paragraph (g) requires that the application explain how the methodology would take into account reservoir heterogeneity and area variation in reservoir producibility. These changes are necessary because of changes that the EPAct of 2005 made to the NPRPA. Also, as discussed earlier, the terms ''reservoir heterogeneity'' and ''variation in reservoir producibility'' are defined in section 3130.0–5 of this rule. We received no substantive comment on this. We made one grammatical change to this section by revising existing paragraph (d) to make it grammatically correct.

Section 3137.41 What continuing development obligations must I define in a unit agreement?

This rule amends the section on continuing development obligations by requiring that a unit agreement provide for the submission of supplemental or additional plans of development which obligate the operator to a program of exploration and development. The existing regulations require that the unit agreement actually obligate the operator to a program of exploration and development. The change recognizes that at the early stages of a unit agreement, an operator would not be able to identify the program of exploration and development and therefore it might not be possible for an operator to commit to one at that time. The rule allows an operator to submit plans of development later in the process, allowing the operator to collect additional data prior to requiring the operator to obligate itself to a program of exploration and development. We received no substantive comment on this section and it remains as proposed.

Section 3137.80 What are participating areas and how do they relate to the unit agreement?

This rule makes two changes to this section. The first change revises paragraph (a) of the section by replacing ''that contain'' with ''that are proven to be productive by.'' The existing regulations imply that every committed tract within a participating area must contain a well that meets the productivity criteria specified in the unit agreement. The revision makes it clear that a participating area contains committed tracts in a unit area that are proven to be productive by a well meeting the productivity criteria specified in the unit agreement, but that not every committed tract in the participating area would necessarily contain a well meeting the productivity criteria.

The second change this rule makes is to paragraph (b) of this section. Under the new rule, an applicant is required to include ''a description of the anticipated participating area(s) size in the unit agreement'' rather than merely stating that the unit area ''contain'' a well meeting the productivity criteria (see existing section 3137.80(a)). This change makes it clear that the application must contain a description of the anticipated participating area size. We received no substantive comment on this section and it remains as proposed.

Section 3137.81 What is the function of a participating area?

The rule revises paragraph (a) of this section by changing how the BLM allocates production, for royalty purposes, to each committed tract within the participating area. Under existing regulations, the BLM allocates to each committed tract within the participating area in the same proportion as that tract's surface acreage in the participating area to the total acreage in the participating area. Under this rule, the BLM allocates production for royalty purposes to each committed tract within the participating area using the allocation methodology agreed to in the unit agreement (see section 3137.23(g)). This change allows for variations in the reservoir geology and producibility when calculating allocations for royalty purposes. We received no substantive comment on this section and it remains as proposed.

Section 3137.85 What is the effective date of a participating area or modified allocation schedule?

This rule revises paragraph (b) of this section by changing how the BLM determines the effective date of a modified participating area or modified allocation schedule. Under existing regulations, the effective date of a modified participating area or modified allocation schedule is the earlier of the first day of the month in which you: (1) Complete a new well meeting the productivity criteria; or (2) Should have known you need to revise the allocation schedule. Under this rule, the effective date of a modified participating area or allocation schedule is the earlier of the first day of the month in which you file a proposal for modification or such other date as may be provided in the unit agreement. It has been common practice with oil and gas units administered by the State of Alaska to allow for an earlier effective date when participating areas or allocation schedules are modified.

The rule allows the BLM to approve an earlier effective date of the participating area, if it is warranted, consistent with the approach that the State of Alaska takes. Under this rule, rather than just determining a fair, current allocation of a revised participating area, the BLM is able to approve an effective date back in time. This allows corrections of past, errant allocations rather than just moving forward with a fair allocation from the time new information is acquired. This method of ''backward-looking'' reallocation creates a greater administrative workload for the BLM and the MMS, but it is the superior approach because it allows for corrections of allocations that were incorrect and helps to ensure that parties to the unit are treated equitably. We received no substantive comment on this section and it remains as proposed.

Section 3137.111 When will BLM extend the primary term of all leases committed to a unit agreement or renew all leases committed to the unit?

This rule revises this section by adding lease renewals to this section and referencing the rule governing extensions (43 CFR 3135.1–5). The EPAct of 2005 addresses lease renewals and provides for a renewal fee of $100 per acre for each lease in the unit that is renewed without a discovery under 43 CFR 3135.1–6 of this rule. Renewals are addressed under 43 CFR 3135.1–6 of this rule. This section incorporates those changes in this section of the NPR–A unit regulations. As a result of these changes and because the EPAct of 2005 addresses extensions and lease renewals, existing section 3137.111 is superseded by the statutory provisions that this rule implements. We received no substantive comment on this section and it remains as proposed.

Section 3137.131 What happens if the unit terminated before the unit operator met the initial development obligations?

Section 3137.134 What happens to committed leases if the unit terminates?

These two existing sections address what happens to leases in a unit in the event a unit terminates. This rule revises these sections by adding the option of a lessee applying for a renewal upon unit termination and by adding a cross-reference to the lease renewal provisions in these final regulations. We received no substantive comments on these sections, but made minor changes to the final rule to make it clear that it is not enough to qualify for extension or renewal but that the BLM had to have granted the extension or renewal.

III. Procedural Matters

Executive Order 12866, Regulatory Planning and Review

In accordance with the criteria in Executive Order 12866, this rule is not a significant regulatory action. The Office of Management and Budget makes the final determination under Executive Order 12866.

a. This rule will not have an annual economic effect of $100 million or adversely affect an economic sector, productivity, jobs, the environment, or other units of government (see below). A cost-benefit and economic analysis is not required.

b. This rule will not create inconsistencies with other agencies' actions. These rule changes are administrative in nature and will not effect other agencies' actions. There are provisions in the rule that require the BLM to consult with or request concurrence from the state, North Slope Borough, or the regional corporation before approving certain actions. These provisions are to the benefit of these other agencies because they help ensure that their rights are protected. These provisions will more than likely help ensure that the actions taken under this rule would not create inconsistencies with those agencies' actions.

c. This rule will not materially affect entitlements, grants, user fees, loan programs, or the rights and obligations of their recipients. The one fee this rule implements (lease renewals without a discovery) is a per-acre fee mandated by Congress. As stated below, when compared to the scope and cost of operations in NPR–A, this fee is not significant.

d. This rule will not raise novel legal or policy issues. All of the NPR–A oil and gas regulation changes that this rule implements are currently addressed similarly in other existing BLM regulations or policies.

The following discusses the potential impacts of the rule changes:

Waiver, Suspension, or Reduction of the Rental or Minimum Royalty or Reduction of the Royalty Rate

The rule adds a provision that allows the BLM to waive, suspend, or reduce the rental or minimum royalty or reduce the royalty rate on an NPR–A lease if it is necessary to promote development or the BLM determines that the lease can not be successfully operated under the terms of the lease. The BLM will not allow for any of these to take place unless it is necessary to promote development or if we determine that the lease can not be successfully operated under the terms of the lease.

Operators will benefit from this provision since they will be able to continue to operate their leases. The Federal Government will benefit since producible wells will not be shut in and the Federal Government will continue to receive revenue from wells that might otherwise be shut in, which may result in waste of Federal oil and gas. Furthermore, since this provision may reduce the risk of investment to lessees, it may result in higher bonus bids for new leases. State, local and tribal governments and communities will be positively affected since wells that

would under other circumstances be shut in, will continue to produce, providing jobs and revenues to local areas. Any impacts on the economy, productivity, competition or jobs are anticipated to be positive, but they are too speculative to predict.

Also, as a result of changes made to the NPRPA by the EPAct of 2005, the rule changes existing regulations by requiring the BLM to consult with the State of Alaska and the North Slope Borough within 10 days of receiving an application for waiver, suspension, or reduction of rental or minimum royalty or reduction of royalty. This provision could increase costs slightly for the BLM, the State of Alaska, and the North Slope Borough because under this rule these parties will be involved in consultation that is currently not required. However, consultation will help ensure that the rights of the state and the North Slope Borough are protected.

The rule adds a new provision to the regulations stating that if a lease includes land that is made available for acquisition by a regional corporation under the Alaska National Interest Lands Conservation Act, the BLM will only approve a waiver, suspension, or reduction of rental or minimum royalty or a reduction of the royalty rate if the regional corporation concurs. This change is necessary because the EPAct requires concurrence from the regional corporation prior to approval of these actions. Concurrence by the regional corporation is not currently required. Therefore, this provision could minimally increase administrative costs for the Federal Government and for the regional corporation; however, requiring concurrence would help ensure that the rights of the regional corporation are protected.

Additional Bonding

Changes to the bonding regulations allow the BLM to require additional bonding under certain circumstances. The existing regulations only allow BLM to increase the bonding amount in the Special Areas as defined in the NPRPA. This rule allows the BLM to require an increase in the amount of an NPR–A lease bond for any NPR–A lease if the BLM determines that the operator poses a risk due to factors, including, but not limited to:

(A) A history of previous violations;

(B) A notice from the MMS that there are uncollected royalties due; or

(C) The total cost of plugging existing wells and reclaiming lands exceeds the present bond amount based on the estimates determined by the BLM.

The rule change makes the existing regulations on bonding of NPR–A leases consistent with the Mineral Leasing Act regulations that currently apply to Federal oil and gas leases outside of the NPR–A. The BLM has used this authority on lands leased under the Mineral Leasing Act. The increases have most often been based on the significant liabilities that an operator has under a single bond. Under these circumstances, the average bond increase has been about 200 percent. While it is not possible, at this time, to predict how much any specific bond amount might be increased once this provision is effective, increasing an area-wide NPR–A bond ($300,000) by 200 percent would make the increased bond amount $900,000. This is more consistent with bonding of other agencies on the North Slope than is the area-wide bond amount under existing regulations. For example, the State of Alaska requires bonding of $700,000 for multiple oil wells and the MMS requires bonding of $3,000,000 for offshore development.

This provision will economically impact only those operators who have a history of previous violations, those who have uncollected royalties that are due, and those who have leases where the total cost of plugging existing wells and reclaiming lands exceeds the present bond amount based on the estimates determined by the BLM. We expect the economic impact to these operators to be minimal when compared to the value of an oil and gas lease in the NPR–A, and when compared to the additional protection the Federal Government and Federal lands will receive.

A typical development in NPR–A is expected to produce approximately 20,000 barrels per day or 7,300,000 barrels per year. With a market price of $60 per barrel[1] in the lower 48 states and approximately $8 in transportation costs per barrel to get the oil from NPR–A to the lower 48 states, the wellhead price would be approximately $52 per barrel.

A typical bond amount for a lease in the NPR–A is approximately $300,000. Raising the bonding requirement from $300,000 to $900,000, makes the annual bonding fee the operator will pay go from approximately $3,000 per year to $9,000 per year (the cost of a surety bond is approximately 1% per year), an increase of $6,000 per year.

[1] According to the Alaska Department of Revenue, Tax Division, the per-barrel price for oil between January 2005 and April 2006 fluctuated between $41.12 and $67.74 per barrel. We cannot predict price fluctuations in the future; however, $60 represents an estimate of average prices expected.

How does that compare to other costs the operator faces? The transportation cost to get the production to the lower 48 states is approximately $58,400,000 per year. Receipts at the wellhead are approximately $379,600,000 per year. The lifting costs are about $33,000,000. Royalties are approximately $47,450,000 per year. We anticipate that a $6,000 increase in costs per year will have minimal impact on the operator.

Effect of Transfer of a Tract-Segregation

This rule changes the standard that the BLM applies when determining if a segregated lease should continue in full force and effect. The existing standard is that a segregated lease remains in full force and effect if the BLM determines that oil and gas is being produced in paying quantities from that segregated portion of the lease area or so long as drilling or well reworking operations, either actual or constructive, are being conducted. The new standard is that a lease will continue in full force and effect as long as oil or gas is produced or is capable of being produced from the lease in paying quantities or drilling or reworking operations, actual or constructive, as approved by the BLM, are being conducted on the lease. We anticipate that this rule change will have the same economic impact as discussed under the ''Lease Extension'' and ''Lease Renewal'' sections since the segregated lease will be able to be extended or renewed based on the same criteria used for all NPR-A leases.

Lease Extension

Existing regulations on lease extensions require that the BLM extend the term of a lease beyond its primary term so long as:

(A) Oil or gas is produced from the lease in paying quantities; or

(B) Drilling or reworking operations, actual or constructive, as approved by the BLM, are being conducted on the lease.

This final rule adds a new condition under which the BLM will grant a lease extension in cases where the BLM has determined that oil or gas is capable of being produced in paying quantities from the lease.

This rule also adds a new provision that explains that NPR-A leases expire on the 30th anniversary of the original issuance date of the lease unless oil or gas is being produced from the lease. This provision is required by the EPAct of 2005.

Prior to the EPAct of 2005, NPR-A lease terms were fixed at 10 years. Longer lease terms as a result of extensions are preferable since there are harsh climatic conditions and a short

''winter only'' exploration window in the NPR-A that make it difficult to operate in that region. Extensions of lease terms allow operators additional time to deal with these conditions. Under the existing regulations, the long lead time between exploration and production on the North Slope (6–8 years) reduces the incentive for operators to explore on leases with less than 6–8 years left in their primary term. The new rule provides incentives for operators to continue exploration in the later years of the primary term of the lease. The timeframe for bringing a gas discovery to production is even longer. Without a gas pipeline to the North Slope, operators currently have little incentive to explore in gas-prone areas or to further delineate gas discoveries. The new rule may have the effect of increasing the value of the NPR-A leases, increasing the level of exploration activity, and increasing the likelihood of eventual production from NPR-A leases. The value of these benefits, if any, is too speculative to predict. These changes also have minor administrative savings and economic benefit to operators and to the Federal Government since lessees will not be required to file for lease extensions as frequently and since the Federal Government will not be required to process those lease extensions.

Lease Renewal

This final rule adds a new section on lease renewals based on changes the EPAct of 2005 made to the NPRPA. The rule addresses lease renewals in two parts: those leases that have a discovery of hydrocarbons and those leases that do not have a discovery.

With a Discovery. Under this section, the BLM may approve a 10-year lease renewal for a lease on which there has been a well drilled and a discovery of hydrocarbons, even if the BLM had determined that the well is not capable of producing oil or gas in paying quantities. This section requires that the applicant provide evidence that oil or gas has been discovered on the leased lands in such quantities that a prudent operator would hold the lease for potential future development. This regulatory change is required by the EPAct of 2005.

The economic impact of this provision will be positive. Existing regulations do not provide for lease renewals, but do provide for lease extensions if there is actual production or as long as drilling and reworking operations are being conducted. This provision allows for lease renewal for a 10-year term if a discovery was made and a prudent operator would hold the lease for future development. This provision provides an incentive for an operator to explore, even if there is not enough time to meet the current conditions for lease extensions. This change allows the lessee another 10 years to explore and develop the lease without having to compete for the lease again in a subsequent lease sale. Leases in the NPR-A typically are either 5,760 or 11,520 acres and the average high bid is approximately $70 per acre. The Federal Government may be foregoing between $400,000 and $800,000 for each of these lease renewals, since lessees who were granted a lease renewal would not be required to compete for a new lease for the same lands. In exchange for this ''opportunity cost'' the lease has a much greater likelihood of being developed and developed sooner.

It is also possible that without the option of renewal, the lease which has been explored without a paying well discovery would have less value and not receive bids in the next sale. In this case, the United States would lose the value of lease rental ($60,000–$150,000 per year). Lease bonuses and lease rentals are both lesser considerations for the United States in realizing the value of leased lands, however. The value of potential production from an NPR-A lease far exceeds either of these revenue streams. A typical North Slope development produces about 20,000 barrels of oil per day. At a $60 per barrel oil price, the United States would collect between $45 and $60 million dollars per year in royalties. If the renewals make the likelihood of development greater, the identified ''opportunity costs'' are viewed as beneficial to the United States.

Furthermore, this could reduce risk of investment to the lessee, which may increase bonus bids on future leases.

Without a Discovery. Under this section, the BLM could approve an application for a 10-year lease renewal for a lease on which there has not been a discovery of oil or gas.

Under this rule, the renewal application must:

(A) Provide sufficient evidence that the lessee has diligently pursued exploration that warrants continuation of the lease with the intent of continued exploration or future potential development of the leased land; or

(B) Show that all or part of the lease is part of a unit agreement covering a lease that qualifies for renewal without a discovery and that the lease has not been previously contracted out of the unit.

If the BLM approves an application for lease renewal, the applicant will be required to submit to the BLM a fee of $100 per acre within 5 working days of receiving notification of the renewal approval. This fee is mandated by the EPAct of 2005.

As discussed above, existing regulations do not allow for lease renewals, only lease extensions if there is actual production or as long as drilling and reworking operations are being conducted. This new provision allows for lease renewal without a discovery under certain circumstances and would require that lessees pay a fee of $100 per acre for the renewal. The economic impact of this provision will be minimal. As with lease renewal with a discovery, this provision provides the lessee with incentive to explore, even if there is not sufficient time to take actions to qualify for a lease extension. As discussed above, the cost to obtain the lease in a subsequent sale will likely be around $70 per acre. The new rule allows the lessee to retain the lease without competition or the risk of loss of the lease, for a cost above what it might cost in a competitive lease sale, but it allows the operator to seamlessly pursue exploration. This is likely to have the effect of accelerating the eventuality of bringing the lease into production. It is also possible, as discussed above, that without the option of renewal the lease which has been explored without a discovery would have less value and not receive bids in the next sale. In this case the United States would lose the value of lease rental ($60,000–$150,000 per year). Furthermore, nothing compels a lessee to apply for a lease renewal and pay the per acre fee. If the lessee believes the lease may be valuable, but not worth $100 per acre, he can relinquish the lease and try to obtain it at a lower price in a subsequent competitive lease sale. Operators may still apply for lease extensions under the revised provisions of this rule. Operators may also apply for a renewal under other provisions of this rule and avoid paying the fee by a discovery and a showing that a prudent operator would hold the lease for future development.

The new rule has the effect of allowing the government to be compensated for the lease without having the administrative costs of conducting a new lease sale. The new rule also increases the likelihood of production and royalty payments at an earlier date. The value of potential production from an NPR–A lease far exceeds the value of lease bonuses. A typical North Slope development produces about 20,000 barrels of oil per day. At a $60 per barrel oil price, the United States would collect between

$45 and $60 million dollars per year in royalties.

This provision could lower the risk of investment to the lessee and possibly result in higher bonus bids at future lease sales. Like other changes this rule makes, any benefits of this provision are too speculative to predict.

Lease Consolidation

This rule revises the consolidation provisions in existing regulations having to do with the term of a consolidated lease. Under existing regulations, the term of a consolidated lease is extended beyond the primary term of the lease only as long as oil or gas is produced in paying quantities or approved constructive or actual drilling or reworking operations are conducted on the lease. Under this rule, the term of a consolidated lease will be extended or renewed, as appropriate, under the extension or renewal provisions of the regulations. The change recognizes that the new standards in the extension and renewal provisions of this rule apply to consolidated leases. We expect that this rule change will have the same economic impacts as discussed under the ''Lease Extension'' and ''Lease Renewal'' sections above, i.e., it could have the effect of increasing the value of the NPR-A leases, increasing the level of exploration activity, increasing the likelihood of production from NPR-A leases, and increasing future bonus bids.

Termination of Administration for Conveyed Lands and Segregation

This rule adds a new section concerning the waiver of administration for conveyed lands in a lease. This new section is necessary because of changes that the EPAct of 2005 made to the NPRPA. Under this new section, the BLM is required to terminate administration of any oil and gas lease if all of the mineral estate is conveyed to a regional corporation. The regional corporation would then assume the lessor's obligation to administer any oil and gas lease. This provision does not provide the authority to convey the mineral estate to the regional corporation, only that once a conveyance is made, the BLM would no longer administer any oil and gas lease. This change will have a minor positive economic impact on the Federal Government because costs for administration of these types of leases would no longer be borne by the BLM. Under this final rule, the regional corporation would be responsible for administration and likewise be responsible for administrative costs.

This section explains that if a conveyance of the mineral estate does not include all of the land covered by an oil and gas lease, the lease would be segregated into two leases, one of which will cover only the mineral estate conveyed. The regional corporation would assume administration of the lease within the conveyed mineral estate. The segregation of a lease would not impair the mineral estate owners' rights to royalties for oil and gas produced from, or allocated to, their portions of land covered by the lease. This provision is purely administrative in nature and will have a minimal economic impact. We expect that it will decrease administrative costs for the Federal Government and increase the administrative costs to regional corporations for leases that have been conveyed.

Change to the Definition of Participating Area

This rule makes one change to the definition of ''participating area'' by replacing the word ''contain'' with the phrase ''are proven to be productive by.'' Existing regulations are not clear that a committed tract does not need to contain a well that meets the productivity criteria specified in the unit agreement. Instead, a unit well meeting the productivity criteria proves that the committed tract is productive. This change has no economic impact since this change merely clarifies existing policy.

Consultation If Lands in the Unit Area Are Owned by the Regional Corporation or the State of Alaska

This rule adds a new section on consultation if lands in a unit are owned by a regional corporation or the State of Alaska. This section is based on changes that the EPAct of 2005 made to the NPRPA. The new section requires that if the BLM administers a unit containing tracts where the mineral estate is owned by a regional corporation or the State of Alaska, or if a proposed unit contains tracts where the mineral estate is owned by a regional corporation or the State of Alaska, the BLM will consult with and provide opportunities for participation with respect to the creation or expansion of the unit by:

(A) The regional corporation, if the unit acreage contains the regional corporation's mineral estate; or

(B) The State of Alaska, if the unit acreage contains the state's mineral estate.

The rule will have minor economic impacts on the BLM, the State of Alaska, and the regional corporation. All parties involved in the consultation could incur minor additional costs; however, consultation will help ensure that the rights of all parties to the unit are protected.

NPR–A Unitization Application

The final rule requires the unit application to explain the proposed methodology for allocating production among the committed tracts. If a unit includes non-Federal mineral estate, the applicant is required to explain how the methodology would take into account reservoir heterogeneity and area variation in reservoir producibility. These changes are necessary because of changes that the EPAct of 2005 made to the NPRPA. The economic impacts of this provision are expected to be minor, but not measurable, since the change will impact different unit agreements differently. However, the rule will help to ensure fair allocation of production among unit participants and ensure that the Federal Government receives the correct royalty payment.

Continuing Development Obligations in a Unit Agreement

This final rule amends the provisions on continuing development obligations in existing regulations by requiring that a unit agreement provide for the submission of supplemental or additional plans of development which obligate the operator to a program of exploration and development. The existing regulations require that the unit agreement actually obligate the operator to a program of exploration and development.

The change recognizes that at the early stages of a unit agreement, an operator may not be able to identify the program of exploration and development and therefore it might not be possible for an operator to commit to one at that time. The rule allows an operator to submit plans of development later in the process, allowing for the operator to collect additional data prior to requiring the operator to obligate itself to a program of exploration and development. Under the existing process, because the data may be incomplete, the operator may be required to submit information several times as the data becomes available. The new provision will likely have minor positive economic benefits for applicants and the BLM since it allows commitment to a program of exploration and development at a more appropriate time when sufficient data is available.

Participating Areas

This final rule makes two changes to the provisions on participating areas. The first change makes it clear that a participating area contains committed tracts in a unit area that are proven to

be productive by a well meeting the productivity criteria specified in the unit agreement. The second change is that this rule makes it clear that the unit agreement must contain a description of the anticipated participating area size. Neither of these changes will have an economic impact because they merely clarify existing policy.

Function of a Participating Area

The rule revises the participating area provisions of existing rules by changing how the BLM allocates production, for royalty purposes, to each committed tract within the participating area. Under existing regulations, the BLM allocates to each committed tract within the participating area in the same proportion as that tract's surface acreage in the participating area to the total acreage in the participating area. Under this final rule, the BLM allocates production for royalty purposes to each committed tract within the participating area using the allocation methodology agreed to in the unit agreement. This change allows for variations in the reservoir geology and producibility when calculating allocations for royalty purposes. This change implements changes mandated by Congress in the EPAct of 2005.

This rule change will have little economic impact to industry or the Federal Government, but will help ensure proper production allocations on a case-by-case basis.

Effective Date of a Participating Area

This rule revises how the BLM determines the effective date of a modified participating area or modified allocation schedule. Under existing regulations, the effective date of a modified participating area or modified allocation schedule is the earlier of the first day of the month in which you: (1) Complete a new well meeting the productivity criteria; or (2) Should have known you need to revise the allocation schedule. Under this rule, the effective date of a modified participating area or allocation schedule is the earlier of the first day of the month in which you file a proposal for modification or such other date as may be provided in the unit agreement. This change allows the BLM to approve an earlier effective date, if warranted. Rather than just determining a fair current allocation of a revised participating area, the BLM will be able to approve an effective date back in time. This will allow corrections of past erroneous allocations rather than just moving forward with a fair allocation from the time new information is acquired. This provides greater flexibility and certainty that allocations will be equitably determined for all parties and overall will have no economic impact except that it could affect individual allocations.

Extension of the Primary Term of Leases Committed to a Unit Agreement or Renewal of Leases Committed to a Unit

This final rule revises the provisions on the term of leases committed to a unit by adding lease renewals as an option. The EPAct of 2005 addresses lease renewals and provides for a renewal fee of $100 per acre for each lease in the unit that is renewed without a discovery. This section incorporates those changes in this section of the NPR–A unit regulations. As a result of these changes and because the EPAct of 2005 addresses extensions and lease renewals, existing provisions on lease extensions for leases in a unit are superseded by the statutory provisions that this rule implements. We anticipate that the economic impacts of this rule will be the same as described under the ''Lease Extension'' section above.

Leases in Terminated Units and Lease Renewal

The rule change addresses what happens to leases in a unit in the event a unit terminates. The rule allows a lessee to apply for a lease renewal upon unit termination and conforms the provisions addressing termination with Congress' mandates regarding extension in the EPAct of 2005. Existing regulations allow lease extensions upon unit termination, but do not provide for lease renewals in these circumstances. These changes will likely have a minor positive economic impact by allowing lessees the option of applying for lease renewal upon unit termination.

National Environmental Policy Act

The BLM has prepared an environmental assessment (EA) and has found that the rule does not constitute a major Federal action significantly affecting the quality of the human environment under Section 102(2)(C) of the National Environmental Policy Act (NEPA), 42 U.S.C. 4332(2)(C). A detailed statement under NEPA is not required. The BLM has placed the EA and the Finding of No Significant Impact on file in the BLM Administrative Record at the address specified in the **ADDRESSES** section.

The action of modifying the existing regulations will have very little impact on the environment. The new regulations create more favorable lease terms for oil and gas companies (e.g., allowing lease extensions and renewals, potential for relief from royalty, rental and minimum royalty) and this may increase the likelihood of exploration and development in the NPR–A. The revised regulations also allow the BLM greater flexibility in granting relief from rentals and royalty which may also have the effect of encouraging development. But while the likelihood of exploration and development may be greater, the character or intensity of exploration and development remains unchanged. The potential impacts from exploration and development have been addressed in three environmental impact statements (EIS) written for the Integrated Activity Plans for the Northeast and Northwest NPR–A, seven EAs written for individual exploration proposals, and the Alpine Satellites Development EIS.

To the extent that recent Court decisions may require further NEPA analysis with respect to the environmental impacts of proposed leasing in the NPR–A, the BLM would address such analysis within the context of its consideration of land use planning and any proposed leasing. However, these regulations do not invoke any significant environmental impact requiring additional NEPA analysis beyond the environmental assessment.

The revised regulations may also have the effect of allowing the oil and gas operators to pursue exploration and development at a more measured pace since terms of the lease can be extended beyond what was previously available.

The change to bonding levels will provide the BLM more certainty that environmental obligations, such as reclamation and well plugging, are honored. We expect that this will lessen the likelihood of adverse environmental impacts to the NPR–A.

Changes in the regulations that require: (1) The BLM to allow participation from the regional corporation and the State of Alaska in the creation and expansion of oil and gas units; (2) Consultation with the regional corporation, State of Alaska, and the North Slope Borough when considering relief from royalty, rentals, or minimum royalty; (3) Allocation of production based on reservoir characteristics; and (4) The BLM to give the regional corporation administration of leases conveyed to the regional corporation, are strictly administrative in nature and will have no effect on the environment.

This view as to the minimal environmental effects of the changes in the regulations is consistent with the Department's previously expressed policies as indicated by provisions of the Departmental Manual (DM) which establish categorical exclusions under NEPA for actions by the BLM of the type addressed by these regulations. The

categorical exclusions include ''(3) Approval of unitization [*sic*] agreements * * * (4) Approval of suspensions of operations, *force majeure* suspensions, and suspensions of operations and production.'' See 516 DM Chapter 11.9B(3) and (4) (72 FR 45504, 45539 (August 14, 2007)).

Regulatory Flexibility Act

Congress enacted the Regulatory Flexibility Act (RFA) of 1980, as amended, 5 U.S.C. 601–612, to ensure that Government regulations do not unnecessarily or disproportionately burden small entities. The RFA requires a regulatory flexibility analysis if a rule would have a significant economic impact, either detrimental or beneficial, on a substantial number of small entities.

This rule will not have a significant economic effect on a substantial number of small entities as defined under the RFA. An initial or final Regulatory Flexibility Analysis is not required. Accordingly, a Small Entity Compliance Guide is not required.

The BLM cannot determine how many lessees may qualify as small businesses or how many will be adversely affected by this rule because the BLM does not track this type of information and it is not readily available. The BLM believes that several of the types of businesses identified in the North American Industrial Classification System (NAICS) (codified in the Small Business Administration regulations at 13 CFR 121.201) may do business in the NPR-A. These businesses, NAICS codes, and size standards in millions of dollars in receipts annually or number of employees are listed in the following table:

NAICS code	NAICS U.S. industry title	Size standard in millions of dollars	Size standard in number of employees
211111	Crude Petroleum and Natural Gas Extraction		500
211112	Natural Gas Liquid Extraction		500
213111	Drilling Oil and Gas Wells		500
213112	Support Activities for Oil and Gas Operations	6.5	
237120	Oil and Gas Pipeline and Related Structures Construction	31	

As stated above, the businesses in the table represent ones that may operate in NPR–A. However, we do not believe that businesses with the NAICS codes 213111, 213112, or 237120 will be impacted by the changes this rule makes to the current regulations. Of the businesses listed in the table, businesses with NAICS codes 211111 and 211112 may be impacted by the changes this rule makes because the regulatory changes primarily affect lessees, and lessees may fall into one or both of these two categories.

Due to the scale and cost of operations on the North Slope (see the discussion under Executive Order 12866 above), it is not likely that operators in NPR–A will be small businesses. Furthermore, the BLM is unaware of any small businesses operating on lands in NPR–A under existing regulations, and because of the large scale and high cost of operations in NPR–A, we do not anticipate that small businesses will enter the market in the future. Even if a small business did begin doing business in NPR–A, when compared to the costs of operating in the NPR–A and the potential receipts involved if production were to take place (see the discussion under Executive Order 12866 above), the impact of this rule will be minimal. Therefore, the changes will likely not have a significant economic effect on a substantial number of small entities.

Small Business Regulatory Enforcement Fairness Act

This rule is not a major rule under 5 U.S.C. 804(2), the Small Business Regulatory Enforcement Fairness Act. This rule:

a. Does not have an annual effect on the economy of $100 million or more. Please see the discussion under Executive Order 12866 above.

b. Will not cause a major increase in costs or prices for consumers, individual industries, Federal, state, or local government agencies, or geographic regions. Please see the discussion under Executive Order 12866.

c. Does not have significant adverse effects on competition, employment, investment, productivity, innovation, or the ability of U.S.-based enterprises to compete with foreign-based enterprises. These rule changes should have no adverse effects on competition, employment, investment, productivity, innovation, or the ability of U.S.-based enterprises to compete with foreign-based enterprises because their impact, economic and otherwise, will be minimal.

Unfunded Mandates Reform Act

In accordance with the Unfunded Mandates Reform Act (2 U.S.C. 1501, *et seq.*):

a. This rule will not ''significantly or uniquely'' affect small governments. A Small Government Agency Plan is not required.

b. This rule will not produce a Federal mandate of $100 million or greater in any year, i.e., it is not a ''significant regulatory action'' under the Unfunded Mandates Reform Act.

This final rule will not mandate additional expenditures by any state or local government, any Federal agency, or any other entity. The State of Alaska and the regional corporation may incur minor additional expenses under the consultation provisions of this rule, but the consultations are for the benefit of those parties.

Executive Order 12630, Governmental Actions and Interference With Constitutionally Protected Property Rights (Takings)

The final rule does not represent a government action capable of interfering with constitutionally protected property rights. The rule primarily extends benefits to leaseholders. The cost of additional bonding is too minor to constitute a taking. Therefore, the Department of the Interior has determined that the rule will not cause a taking of private property or require further discussion of takings implications under this Executive Order.

Executive Order 13132, Federalism

The final rule will not have a substantial direct effect on the states, on the relationship between the national government and the states, or on the distribution of power and responsibilities among the various levels of government.

In accordance with Executive Order 13132, the rule does not have significant

Federalism implications. A Federalism assessment is not required.

The rule has the potential for a minimal effect on the states, on the relationship between the national government and the states, and on the distribution of power and responsibilities among the various levels of government. There are certain consultation provisions in the rule where the state would be invited to participate in the discussion of the creation or expansion of Federal unit agreements in NPR–A which contain state lands. The consultation burden is minimal and it is in the interest of the state to participate to help ensure that allocations to the state were fair.

Executive Order 12988, Civil Justice Reform

Under Executive Order 12988, the Office of the Solicitor has determined that this rule does not unduly burden the judicial system and that it meets the requirements of sections 3(a) and 3(b)(2) of the Order. The BLM has worked closely with the Office of the Solicitor to help ensure that the rule is written clearly and to help eliminate drafting errors.

Executive Order 13175, Consultation and Coordination With Indian Tribal Governments

Executive Order 13175 (E.O. 13175) provides that Federal agencies must consult with Indian Tribal Governments before formal promulgation of regulations ''that have Tribal implications.'' E.O. 13175 defines ''Indian Tribes'' for purposes of government-to-government consultation as those ''that the Secretary of the Interior acknowledges to exist as an Indian tribe pursuant to the Federally Recognized Indian Tribe List Act of 1994, 25 U.S.C. 479a'' (E.O. 13175 at section 1(b)). In accordance with this mandate, the Bureau of Indian Affairs recently published a list of recognized tribes, including a large number of Native Alaskan entities including villages, communities, and tribes (see 72 FR 13648 (March 22, 2007)). If there were a duty of government-to-government consultation, prior to promulgation of these regulations, it would be owed to those listed tribal governments.

None of the recognized tribal governments have significant oil and gas interests within NPR–A or within the vicinity of NPR–A. Therefore, nothing in these final regulations has ''substantial direct effects on one or more Indian tribes, on the relationship between the Federal government and Indian tribes, or on the distribution of power and responsibilities between the Federal Government and Indian tribes'' (see section 1(a) of E.O. 13175). Accordingly, the final regulations do not have tribal implications and there is no government-to-government consultation obligation in this case.

Additionally, we are aware that a number of Alaska regional corporations organized under the Alaska Native Claims Settlement Act (43 U.S.C. 1601 *et seq.*) (ANCSA) may own an interest in the mineral estate. The rule provides for consultation with the regional corporation in accordance with the requirements of the EPAct of 2005 if a unit or a proposed unit contains tracts where the mineral estate is owned by a regional corporation. Also, the rule provides for concurrence by the regional corporation before the BLM approves a waiver, suspension, or reduction of rental or minimum royalty or a reduction of royalty under section 3133.3 if the lease includes land that was made available for acquisition by the regional corporation under Section 1431(o) of the Alaska National Interest Lands Conservation Act (ANILCA) (Pub. L. 96–487). Additionally, these corporations could potentially become participants in units that include Federal NPR–A leases. If so, they would be eligible to participate in those unit agreements in the same manner as any other participants. However, no special consultation beyond that required by the EPAct of 2005 or by these rules with such corporations is required as a matter of law. The Bureau of Indian Affairs has recently declined to include such corporations on the list of recognized tribes eligible for government-to-government consultation (see 72 FR 13648 (March 22, 2007)). The Bureau of Indian Affairs previously indicated that ANCSA corporations are formally state-chartered corporations rather than tribes in the conventional legal or ''political sense'' and that Alaskan Native Villages were Indian tribes. See ''Indian Entities Recognized and Eligible to Receive Services From the United States Bureau of Indian Affairs,'' (60 FR 9250 (February 16, 1995)).

The BLM provided opportunity for the tribal governments, along with the public generally, to comment during the comment period, in accordance with the notice and comment requirements of the Administrative Procedure Act. We received no comments from tribes on the proposed rule.

Therefore, in accordance with E.O. 13175, we have found that this rule does not include policies that have tribal implications.

Executive Order 13211, Actions Concerning Regulations That Significantly Affect Energy Supply, Distribution, or Use

In accordance with Executive Order 13211, the BLM has determined that the final rule will not have significant adverse effects on the energy supply, distribution or use, including a shortfall in supply or price increase. For the most part, this rule does not represent the exercise of agency discretion inasmuch as a substantial portion of this rule is mandated by the EPAct of 2005. Congress' mandate to amend the BLM's existing NPR–A oil and gas regulations may result in an increase in oil and gas production of unknown amounts.

Executive Order 13352, Facilitation of Cooperative Conservation

In accordance with Executive Order 13352, the BLM has determined that this rule does not impede facilitating cooperative conservation; takes appropriate account of and considers the interests of persons with ownership or other legally recognized interests in land or other natural resources; properly accommodates local participation in the Federal decision-making process; and provides that the programs, projects, and activities are consistent with protecting public health and safety. The rule may positively affect the facilitation of cooperative conservation because the rule seeks to add provisions to the existing NPR–A oil and gas regulations requiring that the BLM consult with the regional corporation and the state in certain circumstances where consultation is not currently required.

Paperwork Reduction Act

The BLM has determined that this rulemaking does not contain any new information collection requirements that the Office of Management and Budget must approve under the Paperwork Reduction Act of 1995 (44 U.S.C. 3501 *et seq.*).

Data Quality Act

When the BLM developed this rule, it did not conduct or use a study, experiment, or survey requiring peer review under the Data Quality Act (Pub. L. 106–554, Appendix C, § 515, 114 Stat. 2763, 2763A–153–154).

Authors

The principal authors of this rule are Greg Noble, Chief, Energy Branch, Bureau of Land Management, Alaska State Office, and Erick Kaarlela, Special Assistant to the Assistant Director, Minerals, Realty and Resource Protection, assisted by the Department of the Interior Office of the Solicitor and

BLM's Division of Regulatory Affairs, Washington, DC.

List of Subjects in 43 CFR Part 3130

Alaska, Government contracts, Mineral royalties, Oil and gas exploration, Oil and gas reserves, Public lands—mineral resources, Reporting and recordkeeping requirements, Surety bonds.

Dated: January 18, 2008.

C. Stephen Allred,

Assistant Secretary, Land and Minerals Management.

■ For the reasons stated in the preamble, the BLM amends 43 CFR part 3130 as set forth below:

PART 3130—OIL AND GAS LEASING: NATIONAL PETROLEUM RESERVE, ALASKA

■ 1. The authority citation for part 3130 is revised to read as follows:

Authority: 42 U.S.C. 6508, 43 U.S.C. 1733 and 1740.

§ 3130.0–3 [Amended]

■ 2. Amend § 3130.0–3 by adding a new paragraph (d) to read as follows:

* * * * *

(d) The Energy Policy Act of 2005 (42 U.S.C. 6506a(o)).

■ 3. Amend § 3130.0–5 by adding three new paragraphs (g), (h), and (i) to read as follows:

§ 3130.0–5 Definitions.

* * * * *

(g) *Production allocation methodology* means a way of attributing the production of oil and gas produced from a unit well or wells to individual tracts committed to the unit and forming a participating area.

(h) *Reservoir heterogeneity* means spatial differences in the oil and gas reservoir properties. This can include, but is not limited to, the thickness of the reservoir, the amount of pore space in the reservoir rock that contains oil, gas, or water, and the amount of water contained in the reservoir rock. This information may be used to allocate production.

(i) *Variation in reservoir producibility* means differences in the rates oil and gas wells produce from the reservoir. These differences can result from variations in the thickness of the reservoir, porosity, and the amount of connected pore space.

■ 4. Amend § 3133.3 by revising paragraphs (a) introductory text, (a)(2), and (b) and by adding a new paragraph (c) to read as follows:

§ 3133.3 Under what circumstances will BLM waive, suspend, or reduce the rental, or minimum royalty, or reduce the royalty rate on my NPR–A lease?

(a) BLM will waive, suspend, or reduce the rental or minimum royalty or reduce the royalty rate on your lease if BLM finds that—

(1) * * *

(2) It is necessary to promote development or the BLM determines the lease cannot be successfully operated under the terms of the lease.

(b) The BLM will consult with the State of Alaska and the North Slope Borough within 10 days of receiving an application for waiver, suspension, or reduction of rental or minimum royalty, or reduction of the royalty rate and will not approve an application under § 3133.4 of this subpart until at least 30 days after the consultation.

(c) If your lease includes land that was made available for acquisition by a regional corporation (as defined in 43 U.S.C. 1602) under the provision of Section 1431(o) of the Alaska National Interest Lands Conservation Act (ANILCA) (16 U.S.C. 3101 *et seq.*), the BLM will only approve a waiver, suspension, or reduction of rental or minimum royalty, or reduction of the royalty rate if the regional corporation concurs.

■ 5. Amend § 3133.4 by revising paragraphs (a)(5), (a)(6), and (a)(7) to read as follows:

§ 3133.4 How do I apply for a waiver, suspension or reduction of rental or minimum royalty or a reduction of the royalty rate for my NPR–A lease?

(a) * * *

(5) A detailed statement of expenses and costs of operating the entire lease, including the amount of any overriding royalty and payments out of production or similar interests applicable to your lease;

(6) All facts that demonstrate the waiver, suspension, or reduction of the rental or minimum royalty, or the reduction of the royalty rate encourages the greatest ultimate recovery of oil or gas or it is in the interest of conservation; and

(7) All facts that demonstrate you cannot successfully operate the lease under the terms of the lease;

* * * * *

■ 6. Amend § 3134.1–2 by revising paragraph (a) to read as follows:

§ 3134.1–2 Additional bonds.

(a) The authorized officer may require the bonded party to supply additional bonding in accordance with § 3104.5(b) of this chapter.

* * * * *

■ 7. Revise § 3135.1–4 to read as follows:

§ 3135.1–4 Effect of transfer of a tract.

(a) When a transfer is made of all the record title to a portion of the acreage in a lease, the transferred and retained portions are divided into separate and distinct leases. The BLM will not approve transfers of a tract of land:

(1) Of less than 640 acres that is not compact; or

(2) That would leave a retained tract of less than 640 acres.

(b) Each segregated lease shall continue in full force and effect for the primary term of the original lease and so long thereafter as the activities on the segregated lease support extension in accordance with § 3135.1–5.

■ 8. Revise § 3135.1–5 to read as follows:

§ 3135.1–5 Extension of lease.

(a) The term of a lease shall be extended beyond its primary term:

(1) So long as oil or gas is produced from the lease in paying quantities;

(2) If the BLM has determined in writing that oil or gas is capable of being produced in paying quantities from the lease; or

(3) So long as drilling or reworking operations, actual or constructive, as approved by the BLM, are conducted thereon.

(b) Your lease will expire on the 30th anniversary of the original issuance date of the lease unless oil or gas is being produced in paying quantities. If your lease contains a well that is capable of production, but you fail to produce the oil or gas due to circumstances beyond your control, you may apply for a suspension under § 3135.2. If the BLM approves the suspension, the lease will not expire on the 30th anniversary of the original issuance date of the lease.

(c) A lease may be maintained in force by the BLM-approved directional wells drilled under the leased area from surface locations on adjacent or adjoining lands not covered by the lease. In such circumstances, drilling shall be considered to have commenced on the lease area when drilling is commenced on the adjacent or adjoining lands for the purpose of directional drilling under the leased area through any directional well surfaced on adjacent or adjoining lands. Production, drilling or reworking of any such directional well shall be considered production or drilling or reworking operations on the lease area for all purposes of the lease.

■ 9. Redesignate § 3135.1–6 as § 3135.1–7 and add a new § 3135.1–6 to read as follows:

§ 3135.1–6 Lease Renewal.

(a) *With a discovery*—(1) At any time after the fifth year of the primary term of a lease, the BLM may approve a 10-year lease renewal for a lease on which there has been a well drilled and a discovery of hydrocarbons even if the BLM has determined that the well is not capable of producing oil or gas in paying quantities. The BLM must receive the lessee's application for lease renewal no later than 60 days prior to the expiration of the primary term of the lease.

(2) The renewal application must provide evidence, and a certification by the lessee, that the lessee or its operator has drilled one or more wells and discovered producible hydrocarbons on the leased lands in such quantities that a prudent operator would hold the lease for potential future development.

(3) The BLM will approve the renewal application if it determines that a discovery was made and that a prudent operator would hold the lease for future development.

(4) The lease renewal will be effective on the day following the end of the primary term of the lease.

(5) The lease renewal may be approved on the condition that the lessee drills one or more additional wells or acquires and analyzes more well data, seismic data, or geochemical survey data prior to the end of the primary term.

(b) *Without a discovery*—(1) At any time after the fifth year of the primary term of a lease, the BLM may approve an application for a 10-year lease renewal for a lease on which there has not been a discovery of oil or gas. The BLM must receive the lessee's application no later than 60 days prior to the expiration of the primary term of the lease.

(2) The renewal application must:

(i) Provide sufficient evidence that the lessee has diligently pursued exploration that warrants continuation of the lease with the intent of continued exploration or future potential development of the leased land. The application must show the:

(A) Lessee or its operator has drilled one or more wells or has acquired and analyzed seismic data, or geochemical survey data on a significant portion of the leased land since the lease was issued;

(B) Data collected indicates a reasonable probability of future success; and

(C) Lessee's plans for future exploration; or

(ii) Show that all or part of the lease is part of a unit agreement covering a lease that qualifies for renewal without a discovery and that the lease has not been previously contracted out of the unit.

(3) The BLM will approve the renewal application if it determines that the application satisfies the requirements of paragraph (b)(2)(i) or (ii) of this section. If the BLM approves the application for lease renewal, the applicant must submit to the BLM a fee of $100 per acre within 5 business days of receiving notification of approval.

(4) The lease renewal will be effective on the day following the end of the primary term of the lease.

(5) The lease renewal may be approved on the condition that the lessee drills one or more additional wells or acquires and analyzes more well data, seismic data or geochemical survey data prior to the end of the primary term.

(c) *Renewed lease.* The renewed lease will be subject to the terms and conditions applicable to new oil and gas leases issued under the Integrated Activity Plan in effect on the date that the BLM issues the decision to renew the lease.

■ 10. Amend newly designated § 3135.1–7 by revising paragraph (d) and by adding a new sentence to the end of paragraph (e) to read as follows:

§ 3135.1–7 Consolidation of leases.

* * * * *

(d) The effective date, the anniversary date, and the primary term of the consolidated lease will be those of the oldest original lease involved in the consolidation. The term of a consolidated lease may be extended, or renewed, as appropriate, beyond the primary lease term under § 3135.1–5 or 3135.1–6.

(e) * * * The highest royalty and rental rates of the original leases shall apply to the consolidated lease.

■ 11. Add a new § 3135.1–8 to read as follows:

§ 3135.1–8 Termination of administration for conveyed lands and segregation.

(a) If all of the mineral estate is conveyed to a regional corporation, the regional corporation will assume the lessor's obligation to administer any oil and gas lease.

(b) If a conveyance of the mineral estate does not include all of the land covered by an oil and gas lease, the lease will be segregated into two leases, one of which will cover only the mineral estate conveyed. The regional corporation will assume administration of the lease covering the conveyed mineral estate.

(c) If the regional corporation assumes administration of a lease under paragraph (a) or (b) of this section, all lease terms, BLM regulations, and BLM orders in effect on the date of assumption continue to apply to the lessee under the lease. All such obligations will be enforceable by the regional corporation as the lessor until the lease terminates.

(d) In a case in which a conveyance of a mineral estate described in paragraph (b) of this section does not include all of the land covered by the oil and gas lease, the owner of the mineral estate in any particular portion of the land covered by the lease is entitled to all of the revenues reserved under the lease as to that portion including all of the royalty payable with respect to oil or gas produced from or allocated to that portion.

■ 12. Amend § 3137.5 by revising the definition of ''Participating area'' to read as follows:

§ 3137.5 What terms do I need to know to understand this subpart?

* * * * *

Participating area means those committed tracts or portions of those committed tracts within the unit area that are proven to be productive by a well meeting the productivity criteria specified in the unit agreement.

* * * * *

■ 13. Add a new § 3137.11 to read as follows:

§ 3137.11 What consultation must the BLM perform if lands in the unit area are owned by a regional corporation or the State of Alaska?

If the BLM administers a unit containing tracts where the mineral estate is owned by a regional corporation or the State of Alaska, or if a proposed unit contains tracts where the mineral estate is owned by a regional corporation or the State of Alaska, the BLM will consult with and provide opportunities for participation in negotiations with respect to the creation or expansion of the unit by—

(a) The regional corporation, if the unit acreage contains the regional corporation's mineral estate; or

(b) The State of Alaska, if the unit acreage contains the state's mineral estate.

■ 14. Amend § 3137.21 by revising paragraph (a)(3), redesignating paragraph (a)(5) as paragraph (a)(6), adding a new paragraph (a)(5) and revising newly designated paragraph (a)(6) to read as follows:

§ 3137.21 What must I include in an NPR–A unit agreement?

(a) * * *

(3) The anticipated participating area size and well locations (see § 3137.80(b) of this subpart);

* * * * *

(5) A provision that acknowledges the BLM consulted with and provided opportunities for participation in the creation of the unit and a provision that acknowledges that the BLM will consult with and provide opportunities for participation in the expansion of the unit by —

(A) The regional corporation, if the unit acreage contains the regional corporation's mineral estate; or

(B) The State of Alaska, if the unit acreage contains the state's mineral estate.

(6) Any optional terms which are authorized in § 3137.50 of this subpart that you choose to include in the unit agreement.

* * * * *

■ 15. Amend § 3137.23 by revising paragraph (d) introductory text, removing ''and'' from the end of the paragraph (f), redesignating paragraph (g) as paragraph (h), and adding a new paragraph (g) to read as follows:

§ 3137.23 What must I include in my NPR–A unitization application?

* * * * *

(d) A statement certifying—

* * * * *

(g) A discussion of the proposed methodology for allocating production among the committed tracts. If the unit includes non-Federal oil and gas mineral estate, you must explain how the methodology takes into account reservoir heterogeneity and area variation in reservoir producibility; and

* * * * *

■ 16. Amend § 3137.41 by revising the introductory paragraph of the section to read as follows:

§ 3137.41 What continuing development obligations must I define in a unit agreement?

A unit agreement must provide for submission of supplemental or additional plans of development which obligate the operator to a program of exploration and development (see § 3137.71 of this subpart) that, after completion of the initial obligations —

* * * * *

■ 17. Amend § 3137.80 by revising paragraph (a) and the first sentence of paragraph (b) to read as follows:

§ 3137.80 What are participating areas and how do they relate to the unit agreement?

(a) Participating areas are those committed tracts or portions of those committed tracts within the unit area that are proven to be productive by a well meeting the productivity criteria specified in the unit agreement.

(b) You must include a description of the anticipated participating area(s) size in the unit agreement for planning purposes to aid in the mitigation of reasonably foreseeable and significantly adverse effects on NPR–A surface resources. * * *

* * * * *

■ 18. Amend § 3137.81 by revising paragraph (a) to read as follows:

§ 3137.81 What is the function of a participating area?

(a) The function of a participating area is to allocate production to each committed tract within a participating area. The BLM will allocate production for royalty purposes to each committed tract within the participating area using the allocation methodology agreed to in the unit agreement (see § 3137.23(g) of this subpart).

* * * * *

■ 19. Amend § 3137.85 by revising paragraph (b) to read as follows:

§ 3137.85 What is the effective date of a participating area or modified allocation schedule?

* * * * *

(b) The effective date of a modified participating area or modified allocation schedule is the earlier of the first day of the month in which you file the proposal for a modification or such other effective date as may be provided for in the unit agreement and approved by the BLM, but no earlier than the effective date of the unit.

■ 20. Revise § 3137.111 to read as follows:

§ 3137.111 When will BLM extend the primary term of all leases committed to a unit agreement or renew all leases committed to a unit agreement?

If the unit operator requests it, the BLM will extend the primary term of all NPR–A leases committed to a unit agreement or renew the leases committed to a unit agreement if any committed lease within the unit is extended or renewed under §§ 3135.1–5 or 3135.1–6. If the BLM approves a lease renewal under § 3135.1–6(b), the BLM will require a renewal fee of $100 per acre for each lease in the unit that is renewed.

■ 21. Amend § 3137.131 by revising the second and third sentences of the section to read as follows:

§ 3137.131 What happens if the unit terminated before the unit operator met the initial development obligations?

* * * You, as lessee, forfeit all further benefits, including extensions and suspensions, granted any NPR–A lease because of having been committed to the unit. Any lease that the BLM extended because of being committed to the unit would expire unless it had been granted an extension or renewal under §§ 3135.1–5 or 3135.1–6.

■ 22. Amend § 3137.134 by revising paragraph (b) to read as follows:

§ 3137.134 What happens to committed leases if the unit terminates?

* * * * *

(b) An NPR–A lease that has completed its primary term on or before the date the unit terminates will expire unless it is granted an extension or renewal under §§ 3135.1–5 or 3135.1–6.

[FR Doc. E8–1647 Filed 2–1–08; 8:45 am]

BILLING CODE 4310–84–P

FEDERAL COMMUNICATIONS COMMISSION

47 CFR Part 64

[CC Docket No. 94–129; FCC 07–222]

Implementation of the Subscriber Carrier Selection Changes Provisions of the Telecommunications Act of 1996; Policies and Rules Concerning Unauthorized Changes of Consumers' Long Distance Carriers; LEC Coalition Application for Review Regarding Carrier Change Rules

AGENCY: Federal Communications Commission.

ACTION: Final rule.

SUMMARY: In this document, the Commission denies an Application for Review filed by a coalition of local exchange carriers (''LEC Petitioners'') regarding the Commission's carrier change verification rules. Specifically, the Commission affirms that it is not permissible for an executing carrier to block a carrier change submission by a submitting carrier, based on the executing carrier's own finding that the customer's information does not match exactly the information in the executing carrier's records.

DATES: Effective February 4, 2008.

ADDRESSES: Federal Communications Commission, 445 12th Street, SW., Washington, DC 20554.

FOR FURTHER INFORMATION CONTACT: Nancy Stevenson, Consumer & Governmental Affairs Bureau at (202)

418–7039 (voice), or e-mail *Nancy.Stevenson@fcc.gov*.

SUPPLEMENTARY INFORMATION: On July 8, 2005, an application for review was filed by a coalition of local exchange carriers against the Commission's *Implementation of the Subscriber Carrier Selection Changes Provisions of the Telecommunications Act of 1996*, declaratory ruling, DA 05–1618, published at 71 FR 2895 (January 18, 2006). This is a summary of the Commission's *document* FCC 07–222, adopted December 18, 2007, released January 4, 2008, denying the application for review. Copies of document FCC 07–222 and any subsequently filed documents in this matter will be available for public inspection and copying during regular business hours at the FCC Reference Information Center, Portals II, 445 12th Street, SW., Room CY–A257, Washington, DC 20554. Document FCC 07–222 and any subsequently filed documents in this matter may also be purchased from the Commission's duplicating contractor at Portals II, 445 12th Street, SW., Room CY–B402, Washington, DC 20554. Customers may contact the Commission's duplicating contractor at their Web site: *http://www.bcpiweb.com* or call 1–800–378–3160. To request materials in accessible formats for people with disabilities (Braille, large print, electronic files, audio format), send an e-mail to *fcc504@fcc.gov* or call the Consumer & Governmental Affairs Bureau at (202) 418–0530 (voice) or (202) 418–0432 (TTY). Document FCC 07–222 can also be downloaded in Word and Portable Document Format (PDF) at: *http://www.fcc.gov/cgb/policy*.

Paperwork Reduction Act of 1995 Analysis

The document does not contain new information collection requirements subject to the Paperwork Reduction Act of 1995 (PRA), Public Law 104–13. In addition, it does not contain any new or modified ''information collection burden for small business concerns with fewer than 25 employees,'' pursuant to the Small Business Paperwork Relief Act of 2002, Public Law 107–198. *See* 47 U.S.C. 3506(c)(4).

Synopsis

Section 64.1120(a)(2) of the Commission's rules provides that ''[a]n executing carrier shall not verify the submission of a change in the subscriber's selection of a telecommunications service received from a submitting carrier.'' The Commission affirms that it is not permissible for an executing carrier to block a carrier change submission by a submitting carrier, based on the executing carrier's own finding that the customer's information does not match exactly the information in the executing carrier's records. The Commission expressed concern that executing carriers could use the verification process as a means to delay or deny carrier change requests in order to benefit themselves or their affiliates. While the Commission agreed that allowing executing carriers to re-verify carrier change requests could, under certain circumstances, help deter slamming, it ultimately concluded that the anti-competitive effects of re-verification outweighed the potential benefits.

The LEC Petitioners contend that the Bureau mischaracterized their argument. Rather, according to the LEC Petitioners, under general principles of agency law, an executing carrier simply has a much more limited obligation to its subscribers not to make changes to subscriber accounts without prior indication from the subscriber that the submitting carrier request was so authorized. The LEC Petitioners liken their actions to that of a clerk at a liquor store that asks a customer for identification as a condition of purchase.

The Commission disagrees with LEC Petitioners and finds there is no material distinction between rejecting a carrier change request because of a determination that the customer is not authorized, and rejecting a change request because the LEC has determined that customer information does not match the LEC's records. As the Bureau emphasized in its declaratory ruling, and as commenters reiterate here, the Commission has already clearly defined the roles of the submitting and executing carrier in a carrier change request. Specifically, in the course of verifying the subscriber's intention to change long distance service, a submitting carrier's independent, third-party verifier is required to elicit confirmation that the person contacted is authorized to make the change (that is, either the party or an agent of the party identified on the account). As to executing carriers, the Commission's rules simply require ''prompt execution of changes verified by a submitting carrier.'' As stated in the declaratory ruling, the mere fact that the name(s) contained in the executing carrier's LEC account information may differ from that of the contact person listed on the submitting carrier's change request does not necessarily indicate a lack of authority or agency on the part of the person requesting the IXC change. The Commission finds credible, and LEC Petitioners do not dispute, that ''customers often authorize a spouse, a roommate, or other associate to act on their behalf,'' or may use a different name for billing purposes, and this information may not reside in the LEC's files. The Commission does not believe the LEC Petitioners' liquor store analogy is applicable to the actions at issue here. In the LEC Petitioners' purported analogy, the customer is directly requesting a product sold by that store. Here, an executing carrier seeks to block a transaction that has already occurred between a customer and another carrier.

The LEC Petitioners also argue that the Bureau erred when it failed to consider their arguments in light of *AT&T* v. *FCC*. In that decision, the court found that the Commission could not require submitting carriers to obtain actual authorization from a subscriber for a carrier change. Instead, the court found that Section 258 of the Act provides that carriers must comply only with ''such verification *procedures* as the Commission shall prescribe (emphasis added).'' The court added that requiring actual authorization was tantamount to holding submitting carriers to a strict liability standard, but that no such standard was contained in section 258 of the Act. The LEC Petitioners point to the court's statement that the customer's local exchange carrier ''might be able to verify the subscriber's identity by consulting its own customer records,'' to support their proposition that they should not have to presume that any name submitted in connection with a carrier change order is authorized by the subscriber. The Commission disagrees. In *AT&T* v. *FCC*, the court reviewed the Commission's enforcement action imposing forfeiture against AT&T for slamming. That decision concerned only the obligations of a submitting carrier; it did not address the rights or obligations of LECs. The specific language cited by the LEC Petitioners occurs in the context of the court's explanation of why the Commission exceeded its statutory authority in creating an ''actual authorization from the subscriber'' requirement and enforcing it against AT&T.

The Bureau cited several examples (provided by the LEC Petitioners) of situations in which a LEC could, under the Commission's rules, legitimately reject a submitting carrier's change request, such as when a customer is already subscribed to the submitting carrier, when a customer has a PIC freeze in place, or when PIC changes are not permitted (*e.g.*, certain college dormitory rooms). The LEC Petitioners

argue that rejection of a carrier change for the reasons at issue here cannot be disallowed if it is in fact permissible for a LEC to utilize its records when processing a carrier change request, as in the examples described above. The Commission disagrees. The Commission reiterates that carriers may access account information in the course of effectuating carrier changes, and we do not believe that, under the limited circumstances described above, an executing carrier's return of a carrier change to the submitting carrier constitutes re-verification in violation of the Commission's rules. The Commission's objection to the LEC actions at issue here is not related to their consulting account information *per se* during the course of executing a carrier change. Rather, it violates Commission rules for executing carriers to make an independent determination with respect to the ability of a person to authorize a carrier change based on such information.

Executing carriers have means (other than re-verification) of protecting their customers that do not interfere with competition or undermine consumer choice. Executing carriers can, for example, alert customers to preferred carrier changes, such as by highlighting changes to customers' accounts in customer billings, and can offer a preferred carrier freeze option to customers who are concerned about slamming. However, as the Commission expressed in the past, re-verification by executing carriers could function as a *de facto* preferred carrier freeze in situations where a subscriber has not requested such a freeze. The Commission emphasized that the imposition of a preferred carrier freeze must be authorized by the consumer to minimize any anticompetitive effects and to maintain flexibility for consumers. While preferred carrier freezes can provide consumers with extra protection from slamming, freezes by their very nature impose additional burdens on subscribers, and as such should only be enacted as a result of consumer choice. In the declaratory ruling, the Bureau reiterated this concern with respect to the LEC Petitioners' actions. The LEC actions at issue here serve to restrict consumer control by eliminating the consumer's ability to designate someone (such as a spouse) as authorized to change telecommunications service without first contacting the local carrier, thereby increasing the ability of the executing carrier to act in an anti-competitive manner. Endorsement of the LEC Petitioners' policies would result in inconvenience and delays for customers. The Commission continues to believe that the actions of the LEC Petitioners can, and do, result in *de facto* preferred carrier freezes where the customer has not requested such a freeze.

Finally, the Commission notes that IUB and NASUCA commented in support of the LEC Petitioners. While the Commission declines to grant the LEC Petitioners' request to reverse the Bureau's finding in the declaratory ruling, the Commission recognizes that state authorities may have verification requirements for matters within their jurisdiction that are stricter than those of the Commission. As the Commission recognized in the *Third Report and Order*, FCC 00–255, published at 66 FR 12877 (March 1, 2001), states have valuable insight into the slamming problems experienced by consumers in their respective locales. Accordingly, the Commission declined to require that ''states * * * limit their verification requirements so that they are no more stringent than those promulgated by this Commission.'' As was noted in the declaratory ruling, the Commission's decision here concerns the question of permissible actions by private companies, not actions by a state regulatory agency.

Congressional Review Act

The Commission will not send a copy of document FCC 07–222 pursuant to the Congressional Review Act, *see* 5 U.S.C. 801(a)(1)(A), because no new rules were adopted in the document.

Ordering Clauses

Pursuant to the authority contained in sections 1, 2, 4(i), and 258 of the Communications Act of 1934, as amended, 47 U.S.C. 151, 152, 154(i), and 258, and sections 1.115 and 64.1120(a)(2) of the Commission's rules, 47 CFR 1.115 and 64.1120(a)(2), document FCC 07–222 is adopted.

Pursuant to the authority contained in sections 1, 2, 4(i), and 258 of the Communications Act, of 1934, as amended, 47 U.S.C. 151, 152, 154(i), and 258, and sections 1.115 and 64.1120(a)(2) of the Commission's rules, 47 CFR 1.115 and 64.1120(a)(2), the LEC Petitioners' Application for Review is denied.

Federal Communications Commission.

Marlene H. Dortch,

Secretary.

[FR Doc. E8–1980 Filed 2–1–08; 8:45 am]

BILLING CODE 6712–01–P

Proposed Rules

Federal Register
Vol. 73, No. 23
Monday, February 4, 2008

This section of the FEDERAL REGISTER contains notices to the public of the proposed issuance of rules and regulations. The purpose of these notices is to give interested persons an opportunity to participate in the rule making prior to the adoption of the final rules.

DEPARTMENT OF JUSTICE

28 CFR Part 58

[Docket No: EOUST 101]

RIN 1105–AB29

Procedures for Completing Uniform Forms of Trustee Final Reports in Cases Filed Under Chapters 7, 12, and 13 of Title 11

AGENCY: Executive Office for United States Trustees (EOUST), Justice.

ACTION: Notice of proposed rulemaking.

SUMMARY: The Department of Justice, through its component, EOUST, is issuing this notice of proposed rulemaking (rule) pursuant to Section 602 of the Bankruptcy Abuse Prevention and Consumer Protection Act of 2005 (BAPCPA). The BAPCPA requires the Department to issue rules requiring uniform forms for final reports (Uniform Forms) by trustees in cases under chapters 7, 12, and 13 of title 11. The BAPCPA requires the rule to strike the best achievable practical balance between: the reasonable needs of the public for information about the operational results of the Federal bankruptcy system; economy, simplicity, and lack of undue burden on persons with a duty to file these reports; and appropriate privacy concerns and safeguards.

DATES: Submit comments on or before April 4, 2008.

ADDRESSES: Comments on the rule may be submitted via *www.regulations.gov*, by telefax to (202) 307–2397, or by postal mail to Executive Office for United States Trustees (''EOUST''), 20 Massachusetts Ave., NW., 8th Floor, Washington, DC 20530. To ensure proper handling of comments, please reference ''Docket No. EOUST 101'' on all written and electronic correspondence.

FOR FURTHER INFORMATION CONTACT: Roberta A. DeAngelis, Acting General Counsel, or Larry Wahlquist, Office of General Counsel, at (202) 307–1399 (not a toll-free number).

SUPPLEMENTARY INFORMATION:

Posting of Public Comments

Please note that all comments received are considered part of the public record and made available for public inspection online at *http://www.regulations.gov.* Such information includes personal identifying information (such as your name, address, etc.) voluntarily submitted by the commenter. If you want to submit personal identifying information (such as your name, address, etc.) as part of your comment, but do not want it to be posted online, you must include the phrase ''PERSONAL IDENTIFYING INFORMATION'' in the first paragraph of your comment. You must also locate all the personal identifying information you do not want posted online in the first paragraph of your comment and identify what information you want redacted.

If you want to submit confidential business information as part of your comment but do not want it to be posted online, you must include the phrase ''CONFIDENTIAL BUSINESS INFORMATION'' in the first paragraph of your comment. You must also prominently identify confidential business information to be redacted within the comment. If a comment has so much confidential business information that it cannot be effectively redacted, all or part of that comment may not be posted on *http://www.regulations.gov.*

Personal identifying information and confidential business information identified and located as set forth above will be placed in the agency's public docket file, but not posted online. If you wish to inspect the agency's public docket file in person by appointment, please see the **FOR FURTHER INFORMATION CONTACT** paragraph.

Discussion of Rule

The administration of all chapter 7, 12, and 13 bankruptcy cases is entrusted to private persons who are trustees under the supervision and oversight of a regional United States Trustee. As distinguished from trustees, United States Trustees are employees of the Department of Justice.

In every case, a trustee must file with the court and submit to the United States Trustee a final report and final account of his or her case administration. The United States Trustee reviews these reports and they are then filed with the court.

While the trustee final report forms currently used across the country essentially serve the same purpose and convey the same information, the format of the forms and required attachments, and even the names of the forms, can be different. In fact, there are over a hundred different versions of these forms in use throughout the country. With the passage of BAPCPA, Congress directed the Attorney General to draft rules creating nationally uniform forms for trustee final reports. The Attorney General delegated this authority to the Director, Executive Office for United States Trustees. In response to this congressional mandate, the Director publishes this rule, which requires trustees to utilize nationally uniform final report forms rather than the local forms currently in effect. This rule does not impose requirements on the general public; it affects only trustees who are supervised by United States Trustees.

UST Forms 102–7–TFR, 102–7–NFR, 102–7–TDR, 102–7–NDR, 102–12–FR–S, 102–13–FR–S, 102–12–FR–C, and 102–13–FR–C are the final report Uniform Forms required by this rule. The information required by these forms is set forth in proposed section 58.7 in the amendatory text below. These Uniform Forms will facilitate the review of a trustee's case administration, which will assist in maintaining the public's trust in the bankruptcy system. In addition, these reports, once filed in a case, will be available to the general public at the office of the clerk of the United States Bankruptcy Court where a case is pending during the hours established by the bankruptcy court clerk. Members of the public should contact individual United States Bankruptcy Courts to obtain information about the policies and procedures for inspection of final reports filed in any particular case. Final reports in cases are also available through the Internet by accessing the Electronic Case Filing System under PACER at *http://www.pacer.psc.uscourts.gov.*

These Uniform Forms shall be filed via the United States Bankruptcy Courts Case Management/Electronic Case Filing System (CM/ECF) as a ''smart form.'' A smart form is a document that

is data enabled. When it is saved into the industry standard Portable Document Format (PDF), stored data tags are then available for extraction and searching. This is contrary to a form that is not data-enabled, where the PDF is simply an image of the form and data is not uniformly available for searching. The data-enabled form builds upon the existing Adobe PDF/A standard (Version 1.4). Specifically, the standard incorporates the use of XMP metadata or Acroform field and value (F/V) tags within an Adobe PDF document. The current data schema (DTD) is found on *www.usdoj.gov/ust.* Trustees may obtain these ''smart form'' Uniform Forms from their vendor of trustee case management software. Members of the public may obtain blank Uniform Forms from each United States Trustee field office and from the United States Trustee Program Web site at *http://www.usdoj.gov/ust.*

The usage of these Uniform Forms will accomplish Congress' mandate to develop nationally uniform forms for trustee final reports as directed in the BAPCPA. Instead of many different versions of trustee final reports, trustees throughout the country will use the same eight forms. This will greatly assist consumers in being able to understand the administration of bankruptcy cases, especially when a consumer is located in a different region from where the bankruptcy case is located. The usage of these Uniform Forms will also assist Congress in compiling data to accurately analyze bankruptcy trends when making policy decisions.

Executive Order 12866

This rule has been drafted and reviewed in accordance with Executive Order 12866, ''Regulatory Planning and Review'' section 1(b), The Principles of Regulation. The Department has determined that this rule is a ''significant regulatory action'' and, accordingly, this rule has been reviewed by the Office of Management and Budget (''OMB'').

The Department has also assessed both the costs and benefits of this rule as required by section 1(b)(6) and has made a reasoned determination that the benefits of this regulation justify its costs. The costs considered in this regulation include the time incurred by private trustees to complete the Uniform Forms. Since most of the information in the chapter 7 Uniform Forms is already collected in most districts, the additional time required to collect the requisite information and to complete the Uniform Forms should be minimal.[1] An exception may be UST Form 102–7–NDR, which asks for information not presently collected in any district for no-asset cases. The cost of this form is addressed in the Regulatory Flexibility Act section.

In addition, the Uniform Forms will be added to the trustee case management software utilized by chapter 7 trustees. This software is provided to chapter 7 trustees by various banks free of charge in exchange for trustees depositing estate funds in these banks. For chapter 12 and chapter 13 trustees, it is anticipated that an increase in costs will be incurred due to the usage of these chapters 12 and 13 Uniform Forms. However, any associated cost will be an approved administrative expense of a standing trustee's trust operation.[2]

It is estimated that the cost to the government for developing these Uniform Forms is approximately $20,000. The estimated cost to develop a system to store information extracted from these forms, and to analyze the data, is approximately $650,000. Over the next several years, the EOUST anticipates utilizing base resources available for information technology to meet the costs associated with developing the Uniform Forms and a system to store the information extracted from the forms. There will be no additional cost to the government. In fact, this rule will reduce the costs to the government of compiling the information submitted by private trustees. Since the Uniform Forms will be data enabled, the current system of manually compiling case closing information will be replaced by a less time intensive automated system.

The benefits of this rule include establishing national uniformity in the final reports submitted by trustees, which will enable Congress, and the general public, to obtain more detailed information regarding bankruptcy cases nationally. This rule will enable Congress and the public to identify, among other things, the amount of debt scheduled in bankruptcy cases, the percentage of claims paid to creditors, the amount of debt discharged, and the value of assets abandoned by trustees.

Executive Order 13132

This rule will not have a substantial direct effect on the States, on the relationship between the national government and the States, or on the distribution of power and responsibilities among the various levels of government. Therefore, in accordance with Executive Order 13132, it is determined that this rule does not have sufficient federalism implications to warrant the preparation of a Federalism Assessment.

Regulatory Flexibility Act

In accordance with the Regulatory Flexibility Act (5 U.S.C. 605(b)), the Director has reviewed this rule and certifies that none of the Uniform Forms, except for 102–7–NDR, will have a significant economic impact on a substantial number of small entities. This rule will affect only approximately 1,400 trustees. In addition, trustees already submit to the court essentially the same information as that required by this rule though formats vary in judicial districts. This rule simply creates uniform forms for all trustees to use throughout the country rather than local court forms.

For chapter 12 and chapter 13 trustees, it is estimated that there will be an increase in costs in the amount of approximately $7.00 per final report. However, this is less than 1% of chapters 12 and 13 trustees' total operating expenses. Chapters 12 and 13 standing trustees allocate this cost toward an annual budget, which means trustees deduct this cost from funds disbursed from debtors' estates to creditors. Thus, the chapters 12 and 13 Uniform Forms will not have a significant economic impact upon standing trustees.[3] Public comments regarding the economic impact of the Uniform Forms upon trustees are requested.

It is anticipated that UST Form 102–7–NDR may have a significant economic impact upon chapter 7 trustees because this form asks for information not presently collected in any district for no-asset cases. Accordingly, EOUST has prepared the following initial Regulatory Flexibility Act analysis.

A typical chapter 7 trustee may close as many as 500 no asset cases each year. The current practice allows trustees to file a docket entry ''virtual form'' for no asset cases, which enables a trustee to quickly complete the process on-line without having to complete a separate form and upload it to the court's electronic filing system. Additionally, a trustee may file many such virtual forms simultaneously in batch mode format.

[1] It is estimated that completion of the chapter 7 Uniform Forms, other than UST Form 102–7–NDR, will take approximately the same amount of time as the current chapter 7 final reports. Therefore, there should not be an appreciable difference in costs to complete the chapter 7 Uniform Forms as compared to current chapter 7 final report forms.

[2] Please see the Regulatory Flexibility Act section for an explanation of the chapters 12 and 13 Uniform Forms costs.

[3] Chapters 12 and 13 case trustees closed less than .001% of chapters 12 and 13 cases in fiscal year 2007.

With the introduction of the UST Form 102–7–NDR form, the current practice of filing virtual forms for no-asset cases via the court's electronic filing system will no longer be an option.

It is estimated that it will take approximately ten minutes of staff time to collect and input the information required by UST Form 102–7–NDR. A typical staff assistant earns approximately $25 per hour, which means a trustee could incur an additional $2,100 a year in increased costs. However, EOUST is currently exploring alternatives with the Administrative Office of the United States Courts to enhance the transmission of electronic data collected by the courts to EOUST. These include alternatives that would reduce or eliminate the need for trustees to manually enter the information for UST Form 102–7–NDR, which will reduce much of the increased costs mentioned above for this form.[4] In addition, EOUST has requested the Administrative Office of the United States Courts to update their electronic filing system to allow trustees to file multiple UST Form 102–7–NDR forms at once to reduce the burden on trustees and on the court. EOUST specifically invites comments from the public suggesting other methods of reducing or eliminating any additional costs associated with completing the UST Form 102–7–NDR.

Paperwork Reduction Act

These forms are associated with an open bankruptcy case. Therefore, the exemption under 5 CFR 1320.4(a)(2) applies.

Unfunded Mandates Reform Act of 1995

This rule does not require the preparation of an assessment statement in accordance with the Unfunded Mandates Reform Act of 1995, 2 U.S.C. 1531. This rule does not include a federal mandate that may result in the annual expenditure by State, local, and tribal governments, in the aggregate, or by the private sector, of more than the annual threshold established by the Act ($123 million in 2005, adjusted annually for inflation). Therefore, no actions were deemed necessary under the provisions of the Unfunded Mandates Reform Act of 1995.

[4] The enhanced data transmission contemplated by EOUST would also reduce the increased costs for chapters 12 and 13 trustees in completing the Uniform Forms.

Small Business Regulatory Enforcement Fairness Act of 1996

This rule is not a major rule as defined by section 804 of the Small Business Regulatory Enforcement Fairness Act of 1996, 5 U.S.C. 801 *et seq.* This rule will not result in an annual effect on the economy of $100 million or more; a major increase in costs or prices; or significant adverse effects on competition, employment, investment, productivity, and innovation; or on the ability of United States-based companies to compete with foreign-based companies in domestic and export markets.

Privacy Act Statement

28 U.S.C. 589b authorizes the collection of the information in the final reports. As part of the trustee's reporting to the court, the United States Trustee, and creditors concerning the trustee's administration of the bankruptcy estate, the United States Trustee will review the information contained in these reports. The United States Trustee will not share the information with any other entity unless authorized under the Privacy Act, 5 U.S.C. 552a *et seq.* EOUST has published a System of Records Notice that delineates the routine use exceptions authorizing disclosure of information. See 71 FR 59818, 59822 (Oct. 11, 2006), JUSTICE/UST–002, ''Bankruptcy Trustee Oversight Records.'' Providing this information is mandatory under 11 U.S.C. 704.

List of Subjects in 28 CFR Part 58

Bankruptcy, Trusts and trustees.

For the reasons set forth in the preamble, 28 CFR part 58 is proposed to be amended as set forth below:

PART 58—[AMENDED]

1. The authority citation for part 58 is revised to read as follows:

Authority: 5 U.S.C. 301, 552; 11 U.S.C. 109(h), 111, 521(b), 727(a)(11), 1141(d)(3), 1202; 1302, 1328(g); 28 U.S.C. 509, 510, 586, 589b.

2. Add section 58.7 to read as follows:

§ 58.7 Procedures for completing uniform forms of trustee final reports in cases filed under chapters 7, 12, and 13 of the Bankruptcy Code.

(a) *UST Form 102–7–TFR, Chapter 7 Trustee's Final Report.* A chapter 7 trustee must complete UST Form 102–7–TFR final report (TFR) before the case may be closed. This report must be submitted to the United States Trustee after liquidating the estate's assets, but before making distribution to creditors, and before filing it with the United States Bankruptcy Court. Pursuant to 28 U.S.C. 589b(d), the TFR must contain the following:

(1) Summary of the trustee's case administration;

(2) Copies of the estate's financial records;

(3) List of allowed claims;

(4) Fees and administrative expenses;

(5) Proposed dividend distribution to creditors; and

(6) Trustee's certification under penalty of perjury that all assets have been liquidated or properly accounted for, and that funds of the estate are available for distribution.

(b) *UST Form 102–7–NFR Chapter 7 Trustee's Notice of Trustee's Final Report.* After the TFR has been reviewed by the United States Trustee and filed with the United States Bankruptcy Court, if the net proceeds realized in an estate exceed $1,500, UST Form 102–7–NFR (NFR) must be sent to all creditors as the notice required under Fed. R. Bankr. P. 2002(f). The NFR must show the receipts, approved disbursements, and any balance identified on the TFR, as well as the information required in the TFR's Exhibit D. In addition, the NFR must identify the procedures for objecting to any fee application or to the TFR.

(c) *UST Form 102–7–TDR Chapter 7 Trustee's Final Account, Certification The Estate Has Been Fully Administered and Application of Trustee To Be Discharged.* After distributing all estate funds, a trustee must submit to the United States Trustee and file with the United States Bankruptcy Court the trustee's final account, UST Form 102–7–TDR (TDR). The TDR must contain the trustee's certification that the estate has been fully administered and the trustee's request to be discharged as trustee. Pursuant to 28 U.S.C. 589b(d), the TDR must also include the following:

(1) The length of time the case was pending;

(2) Assets abandoned;

(3) Assets exempted;

(4) Receipts and disbursements of the estate;

(5) Claims asserted;

(6) Claims allowed; and,

(7) Distributions to claimants and claims discharged without payment, in each case by appropriate category.

(d) *UST Form 102–7–NDR Chapter 7 Trustee's Report of No Distribution.* In cases where there is no distribution of funds the case trustee must submit to the United States Trustee and file with the United States Bankruptcy Court UST Form 102–7–NDR (NDR). The NDR must contain the trustee's certification, under penalty of perjury, that the estate has

been fully administered, that the trustee has neither received nor disbursed any property or money on account of the estate except exempt property to the debtor, and that there is no property available for distribution over and above that exempted by law. In addition, the NDR must set forth the trustee's request to be discharged as trustee. Pursuant to 28 U.S.C. 589b(d), the NDR must also include the following information:

(1) The length of time the case was pending;

(2) Assets abandoned;

(3) Assets exempted;

(4) Claims asserted;

(5) Claims scheduled; and,

(6) Claims discharged without payment.

(e) *UST Form 102–12–FR–S, Chapter 12 Standing Trustee's Final Report and Account and UST Form 102–13–FR–S, Chapter 13 Standing Trustee's Final Report and Account.* After the final distribution to creditors in a chapter 12 or 13 case in which a standing trustee has been appointed, a trustee must submit to the United States Trustee and file with the United States Bankruptcy Court either UST Form 102–12–FR–S for chapter 12 cases or UST Form 102–13–FR–S for chapter 13 cases, which are the trustee's final report and account. In these forms, a trustee must include a certification that the estate has been fully administered if not converted to another chapter and a request to be discharged as trustee. Pursuant to 28 U.S.C. 589b(d), these forms must also include the following information:

(1) The length of time the case was pending;

(2) Assets abandoned;

(3) Assets exempted;

(4) Receipts and disbursements of the estate;

(5) Expenses of administration, including for use under section 707(b), actual costs of administering cases under chapter 12 or 13 (as applicable) of title 11;

(6) Claims asserted;

(7) Claims allowed;

(8) Distributions to claimants and claims discharged without payment, in each case by appropriate category;

(9) Date of confirmation of the plan;

(10) Date of each modification thereto; and,

(11) Defaults by the debtor in performance under the plan.

(f) *UST Form 102–12–FR–C, Chapter 12 Case Trustee's Final Report and Account, and UST Form 102–13–FR–C, Chapter 13 Case Trustee's Final Report and Account.* After the final distribution to creditors in a chapter 12 or 13 case in which a case trustee has been appointed, the trustee must submit to the United States Trustee and file with the United States Bankruptcy Court either UST Form 102–12–FR–C for chapter 12 cases, or UST Form 102–13–FR–C for chapter 13 cases, which are the trustee's final report and account. In these forms, a trustee must include a certification, submitted under penalty of perjury, that the estate has been fully administered if not converted to another chapter and the trustee's request to be discharged from further duties as trustee. Pursuant to 28 U.S.C. 589b(d), these forms must also include the following information:

(1) The length of time the case was pending;

(2) Assets abandoned;

(3) Assets exempted;

(4) Receipts and disbursements of the estate;

(5) Expenses of administration, including for use under section 707(b), actual costs of administering cases under chapter 12 or 13 (as applicable) of title 11;

(6) Claims asserted;

(7) Claims allowed;

(8) Distributions to claimants and claims discharged without payment, in each case by appropriate category;

(9) Date of confirmation of the plan;

(10) Date of each modification thereto; and,

(11) Defaults by the debtor in performance under the plan.

(g) *Mandatory Usage of Uniform Forms.* The Uniform Forms associated with this rule must be utilized by trustees when completing their final reports and final accounts. All trustees serving in districts where a United States Trustee is serving must use the Uniform Forms in the administration of their cases, in the same manner, and with the same content, as set forth in this rule:

(1) All Uniform Forms may be electronically or mechanically reproduced so long as all the content and the form remain consistent with the Uniform Forms as they are posted on EOUST's Web site;

(2) The Uniform Forms shall be filed via the United States Bankruptcy Court's Case Management/Electronic Case Filing System (CM/ECF) as a ''smart form'' meaning the forms are data enabled.

Dated: January 18, 2008.

Clifford J. White III,

Director, Executive Office for United States Trustees.

Note: The following appendix will not appear in the Code of Federal Regulations.

Appendix—Overview of Uniform Forms

Form Title

UST Form 102–7–TFR—Chapter 7 Trustee's Final Report

UST Form 102–7–NFR—Chapter 7 Trustee's Notice Of Trustee's Final Report And Application For Compensation

UST Form 102–7–TDR—Chapter 7 Trustee's Final Account, Certification That The Estate Has Been Fully Administered And Application To Be Discharged

UST Form 102–7–NDR—Chapter 7 Trustee's Report Of No Distribution

UST Form 102–12–FR–S—Chapter 12 Standing Trustee's Final Report And Account

UST Form 102–13–FR–S—Chapter 13 Standing Trustee's Final Report And Account

UST Form 102–12–FR–C—Chapter 12 Case Trustee's Final Report And Account

UST Form 102–13–FR–C—Chapter 13 Case Trustee's Final Report And Account

Before a bankruptcy case may be closed, a chapter 7 trustee must make a final report and final account of the administration of cases in which the trustee liquidates non-exempt assets of debtors. To begin the case closing process with the new Uniform Forms, the chapter 7 trustee will prepare and submit UST Form 102–7–TFR (TFR) to the United States Trustee who reviews the report prior to it being filed with the United States Bankruptcy Court. The trustee prepares and submits this TFR after completing the liquidation of the assets, but before making distributions to creditors. The TFR contains a summary of the trustee's case administration, copies of the estate financial records, a list of allowed claims, fees and administrative expenses, and a proposed dividend distribution to creditors. The trustee certifies under penalty of perjury that all assets have been liquidated or properly accounted for, and that funds of the estate are available for distribution. After the TFR has been reviewed by the United States Trustee and filed with the United States Bankruptcy Court, if the net proceeds realized in an estate exceed $1,500, a notice required under Fed. R. Bankr. P. 2002(f) is sent to all creditors with a summary of the TFR final report. This notice is UST Form 102–7–NFR.

After distribution of all estate funds, a trustee submits to the United States Trustee the trustee's final account, UST Form 102–7–TDR (TDR), which is the last report in the chapter 7 case. This TDR contains the length of time the case was pending, assets abandoned, assets exempted, receipts and disbursements of the estate, claims asserted, claims allowed, and distributions to claimants and claims discharged without payment. The TDR also contains the trustee's certification that the estate has been fully administered and the trustee's request to be discharged as trustee.

In cases in which there is no distribution of funds, no asset cases, the case trustee prepares and files with the United States Bankruptcy Court UST Form 102–7–NDR, which is entitled the Report of No Distribution (NDR). UST Form 102–7–NDR contains the trustee's certification, under

penalty of perjury, that the estate has been fully administered, that the trustee has neither received nor disbursed any property or money on account of the estate except exempt property to the debtor, that there is no property available for distribution over and above that exempted by law, and the trustee's request to be discharged as trustee. The NDR will also include information concerning the length of time the case was pending, assets abandoned, assets exempted, claims asserted, claims scheduled, and claims discharged without payment.

After the final distribution to creditors in a chapter 12 or 13 case in which a standing trustee has been appointed, the trustee will file with the United States Bankruptcy Court UST Form 102–12–FR–S for chapter 12 cases or UST Form 102–13–FR–S for chapter 13 cases, which are the trustee's final report and account. In these forms, a trustee includes a certification that the estate has been fully administered if not converted to another chapter and contains the trustee's request to be discharged as trustee. These forms also include the information required for the TDR as well as the date of confirmation of the chapter 12 or 13 plan, date of each modification, and defaults by the debtor in performance under the plan, if applicable. A standing trustee is appointed by the United States Trustee under 28 U.S.C. 586 and may administer more than one chapter 13 or chapter 12 case, as opposed to a case trustee that is appointed under 11 U.S.C. 1302 or 11 U.S.C. 1202 and may administer only the one case to which the trustee is appointed.

After the final distribution to creditors in a chapter 12 or 13 case in which a case trustee has been appointed, the trustee will file with the United States Bankruptcy Court either UST Form 102–12–FR–C for chapter 12 cases, or UST Form 102–13–FR–C for chapter 13 cases, which are the trustee's final report and account. In these forms, a trustee includes a certification, submitted under penalty of perjury, that the estate has been fully administered if not converted to another chapter and the trustee's request to be discharged from further duties as trustee. In addition, the forms contain the same information as that required for chapters 12 and 13 standing trustees.

[FR Doc. E8–1450 Filed 2–1–08; 8:45 am]

BILLING CODE 4410–40–P

ENVIRONMENTAL PROTECTION AGENCY

40 CFR Parts 52

[EPA–R05–OAR–2007–1085; FRL–8519–2]

Approval and Promulgation of State Implementation Plans; Ohio: Proposed Approval of Revised Oxides of Nitrogen (NO_X), Phase II, and Revised NO_X Trading Rule

AGENCY: Environmental Protection Agency (EPA).

ACTION: Proposed rule.

SUMMARY: EPA is proposing approval of a revision to the Ohio State Implementation Plan (SIP) submitted by letter on June 16, 2005. This revision addresses the requirements of EPA's NO_X SIP Call which requires further reductions in NO_X emissions based on cost-effective control measures for large internal combustion engines. The revision also addresses some revisions to the State's NO_X SIP Call trading program. EPA is proposing to determine that the Ohio SIP revision satisfies the requirements for Phase II of the NO_X SIP Call and the NO_X SIP Call trading program because, when implemented, these will meet Ohio's emission reduction requirements under Phase II of the NO_X SIP Call.

DATES: Comments must be received on or before March 5, 2008.

ADDRESSES: Submit your comments, identified by Docket ID No. EPA–R05–OAR–2007–1085, by one of the following methods:

1. *www.regulations.gov:* Follow the on-line instructions for submitting comments.
2. *E-mail: mooney.john@epa.gov.*
3. *Fax:* (312) 886–5824.
4. *Mail:* ''EPA–R05–OAR–2007–1085'', John M. Mooney, Chief, Criteria Pollutant Section, Air Programs Branch (AR–18J), U.S. Environmental Protection Agency, 77 West Jackson Boulevard, Chicago, Illinois 60604.
5. *Hand Delivery or Courier:* John M. Mooney, Chief, Criteria Pollutant Section, Air Programs Branch (AR–18J), U.S. Environmental Protection Agency, 77 West Jackson Boulevard, Chicago, Illinois 60604. Such deliveries are only accepted during the Regional Office's normal hours of operation. The Regional Office's official hours of business are Monday through Friday, 8:30 to 4:30, excluding federal holidays.

Please see the direct final rule which is located in the Rules section of this **Federal Register** for detailed instructions on how to submit comments.

FOR FURTHER INFORMATION CONTACT: John Paskevicz, Engineer, Criteria Pollutant Section, Air Programs Branch (AR–18J), Environmental Protection Agency, Region 5, 77 West Jackson Boulevard, Chicago, Illinois 60604, (312) 886–6084, *paskevicz.john@epa.gov.*

SUPPLEMENTARY INFORMATION: In the Final Rules section of this **Federal Register**, EPA is approving the State's SIP submittal as a direct final rule without prior proposal because the Agency views this as a non-controversial submittal and anticipates no adverse comments. A detailed rationale for the approval is set forth in the direct final rule. If no adverse comments are received in response to this rule, no further activity is contemplated. If EPA receives adverse comments, EPA will withdraw the direct final rule and will address all public comments received in a subsequent final rule based on this proposed rule. EPA will not institute a second comment period. Any parties interested in commenting on this action should do so at this time. Please note that if EPA receives meaningful adverse comment on an amendment, paragraph, or section of this rule and if that provision may be severed from the remainder of the rule, EPA may adopt as final those provisions of the rule that are not the subject of an adverse comment. For additional information, see the direct final rule which is located in the Rules section of this **Federal Register**.

Dated: January 11, 2008.

Gary Gulezian,

Acting Regional Administrator, Region 5.

[FR Doc. E8–1799 Filed 2–1–08; 8:45 am]

BILLING CODE 6560–50–P

DEPARTMENT OF HEALTH AND HUMAN SERVICES

Centers for Medicare & Medicaid Services

42 CFR Parts 400, 405, 410, 412, 413, 414, 488, and 494

[CMS–3818–RCN]

RIN 0938–AG82

Medicare and Medicaid Programs; Conditions for Coverage for End Stage Renal Disease Facilities—Extension of Timeline for Publication of Final Rule

AGENCY: Centers for Medicare & Medicaid Services (CMS), HHS.

ACTION: Extension of timeline for publication of final rule.

SUMMARY: This notice announces an extension of the timeline for publication of the ''Medicare and Medicaid Programs; Conditions for Coverage for End Stage Renal Disease Facilities'' final rule. This notice is issued in accordance with section 1871(a)(3)(B) of the Social Security Act (the Act), which requires that a notice be published in the **Federal Register** if a final regulation, due to exceptional circumstances, will take longer to publish than 3 years after the publication date of the proposed rule. In this case, the complexity of the rule and scope of public comments warrants the extension of the timeline for publication.

DATES: As of February 4, 2008, CMMS announces a delay in the timeline for publication of final rulemaking.

FOR FURTHER INFORMATION CONTACT: Lynn Riley, (410) 786–1286. Lauren Oviatt, (410) 786–4683.

SUPPLEMENTARY INFORMATION:

I. Background

On February 4, 2005, we published in the **Federal Register** a proposed rule (70 FR 6184), that would establish new certification requirements for Medicare coverage of dialysis facilities. The proposed revisions would reflect advances in dialysis technology and standard care practices that have developed since the requirements were last revised in their entirety in 1976.

II. Notice of Continuation

This notice announces an extension of the timeline for publication of a final rule responding to comments on the above proposed rule. Section 1871(a)(3)(B) of the Act requires the Secretary to publish Medicare final regulations no later than 3 years after the publication date of the proposed rule. To meet this 3-year timeframe, the final rule would have to be published by February 4, 2008.

Section 1871(a)(3)(B) also provides that under ''exceptional circumstances,'' the Secretary may extend the initial targeted publication date of a final regulation. The Secretary is required, prior to the regulation's previously established proposed publication date, to provide public notice of this extension in the **Federal Register**, including a brief explanation of the justification for the variation.

This notice extends the timeline based on the following exceptional circumstances, which we believe, justify such an extension. We are not able to meet the 3-year timeline for publication of the final rule due to the complexity of the rule and the large number of public comments we received.

We received a large volume of timely comments on the proposed rule. The commenters presented extremely complex and detailed policy and legal issues, which require extensive consultation, review, and analysis. Also, the development of the final rule requires collaboration among other government agencies, including the Centers for Disease Control and Prevention and other agencies under the Department of Health and Human Services. We note that extensive coordination has been needed to ensure that these provisions follow guidelines and rules of all affected administrative agencies.

In addition, this final rule is extremely comprehensive because it updates and revises policies regarding infection control, water and dialysate quality, hemodialyzer re-use, self dialysis in the home, and clinical management of the dialysis patients' anemia management. Therefore, the incorporation of these updates has required extensive time, outreach, and collaboration to ensure that the final rule's provisions are consistent with technological and scientific advancement in the provision of dialysis services.

We believe that an extension of the publication timeline is necessary and appropriate to ensure that we are able to address all of the comments and issues raised in response to the February 4, 2005 proposed rule. Therefore, this notice extends the timeline for publication of the final rule until February 4, 2009.

Authority: Section 1871 of the Social Security Act (42 U.S.C. 1395hh).

(Catalog of Federal Domestic Assistance Program No. 93.773 Medicare—Hospital Insurance Program; and No. 93.774, Medicare—Supplementary Medical Insurance Program)

Dated: January 31, 2008.

Ann Agnew,

Executive Secretary to the Department.

[FR Doc. E8–2051 Filed 2–1–08; 8:45 am]

BILLING CODE 4120–01–P

Notices

Federal Register

Vol. 73, No. 23

Monday, February 4, 2008

This section of the FEDERAL REGISTER contains documents other than rules or proposed rules that are applicable to the public. Notices of hearings and investigations, committee meetings, agency decisions and rulings, delegations of authority, filing of petitions and applications and agency statements of organization and functions are examples of documents appearing in this section.

DEPARTMENT OF AGRICULTURE

Forest Service

DEPARTMENT OF THE INTERIOR

Bureau of Land Management

Notice of Intent To Prepare a Supplemental Environmental Impact Statement

AGENCY: Forest Service, USDA, and Bureau of Land Management, DOI.

ACTION: Notice of Intent to prepare a Supplemental Environmental Impact Statement to analyze and disclose new information relative to oil and gas leasing of 44,720 acres on the Big Piney Ranger District.

SUMMARY: The Bureau of Land Management (BLM), after receiving nominated oil and gas lease parcels and appropriate lease stipulations from the Forest Service (FS), sold and issued 12 leases, and sold 23 other leases that have not been issued. An appeal to the Interior Board of Land Appeals (IBLA) resulted in a stay being granted for the 12 issued leases. Upon request, the appeal was remanded back to the BLM for resolution. The IBLA decision held that BLM had relied on an inadequate/stale NEPA analysis in reaching its decision to sell and issue the lease parcels. In the case of oil and gas leasing decisions on National Forest system lands, and in conformance with a MOU between the BLM and FS which identifies the need for BLM to be a cooperating agency, the NEPA analysis that was relied on by BLM to inform leasing decisions was adopted from the appropriate and applicable Forest Service NEPA. This supplemental EIS will address the issues identified by IBLA as inadequately or inappropriately addressed in previous NEPA analyses informing leasing decisions, and other issues identified through scoping.

DATES: Comments concerning new information or issues not previously considered in the leasing analysis must be postmarked no later than 45 days from the publication of this notice in the **Federal Register**. The Draft Supplemental EIS (DSEIS) is expected in May of 2008 and the Final Supplemental Environmental Impact Statement (FSEIS) is expected in September of 2008.

ADDRESSES: Send written comments to Stephen Haydon, Forest Minerals Staff, Bridger-Teton National Forest, 340 N. Cache, PO Box 1888, Jackson, WY 83001–1888. Send electronic comments to: *comments-intermtn-bridger-teton@fs.fed.us*; with the subject clearly titled ''Leasing EIS''.

FOR FURTHER INFORMATION CONTACT: Stephen Haydon, Project Leader.

SUPPLEMENTARY INFORMATION: The Bridger-Teton National Forest made an oil and gas leasing decision in the forest plan signed in 1990. Subsequent Environmental Assessments were completed in the early 1990s to consider the impacts of oil and gas leasing in various Management Areas throughout the Forest. Since the early 1990s, several issues that have some bearing on oil and gas leasing have arisen and new information has become available. The Forest reviewed those issues and the new information and documented that review in a Supplemental Information Report dated February 25, 2004. The Forest Supervisor concluded that the new issues and information did not alter the previous leasing decision in the Forest Plan. Subsequently, in 2005 the Forest Service sent lease parcels covering 44,720 acres to the BLM for competitive lease sale. The BLM offered, sold and issued leases on 20,963 acres in December 2005 and April 2006, and sold but did not issue leases on the remaining 23,757 acres in June and August 2006. Following protest and BLM State Director's Review, an appeal to the Interior Board of Land Appeals (IBLA) was filed for the December and April lease sales. The appeal included ''Request for Stay,'' which the IBLA granted. Upon request by the BLM, IBLA remanded the appeals back to the BLM for resolution. This supplemental analysis will address the resource issues and effects analysis concerns identified by IBLA and additional issues identified through this scoping effort.

Purpose and Need for Action

The purpose and need for action is to determine whether and to what extent analysis of new issues and information might alter the oil and gas leasing decision as it relates to the 44,720 acres forwarded to the BLM for competitive lease sale. This action is needed to address the appropriateness of the previous leasing decisions, to decide the final disposition of the suspended existing leases and lease parcels, and to be responsive to the IBLA remand requiring incorporation of the new issues and information in the BLM decision to lift the suspension of lease parcels and issue oil and gas leases.

Proposed Action

The proposed federal action is to lift the current suspension on the issued December 2005 and April 2006 leases and to issue those that were sold but not issued from the June and August 2006 sales. To do so requires the analysis of new issues and information not available to the deciding officials at the time the leasing decision was made.

Possible Alternatives

The alternatives to be considered may include continuation of the current leasing decision contained in the forest plan, and the no action alternative, and potentially others identified in scoping. The no action alternative would involve not issuing the leases that have been sold but not issued, and the cancellation of the leases that were sold. Additional alternatives may be identified once scoping is completed.

Lead and Cooperating Agencies

The Forest Service is the lead agency. The BLM and the State of Wyoming are cooperating agencies.

Responsible Official

The Forest Service responsible official for determining if and to what extent the analysis of new issues and information would alter the oil and gas leasing decision contained in the BTNF Forest Plan (36 CFR 228.102(d)) is Kniffy Hamilton, Forest Supervisor, Bridger-Teton National Forest, 340 N. Cache (P.O. Box 1888), Jackson, Wyoming 83001. The BLM responsible official for final decision (43 CFR 3101.7) relative to the issuance or disposition of the leases and lease parcels is Robert A. Bennett, State Director, BLM—Wyoming

State Office, 5353 Yellowstone (P.O. Box 1828), Cheyenne, Wyoming 82009.

Nature of Decision To Be Made

The Forest Service will determine if and how the current Forest Plan oil and gas leasing decision, as it relates to the 44,720 acres, should be changed based on new information. If a new decision is determined not to be needed following preparation of the Supplemental environmental impact statement, that determination is not subject to appeal in accordance with 36 CFR 215.12. The BLM will then decide whether or not the revised FS NEPA analysis is adequate, and subsequently whether to lift the suspension on the existing leases and whether or not to issue leases on the other lease parcels.

Scoping Process

Scoping for a supplemental statement is not required (40 CFR 1502.9(c)(4)), but due to the length of time since scoping associated with the current leasing decision was conducted, the agencies are soliciting comments specific to new issues or information. Letters will be sent to the forest mailing list of known interested parties. Public meetings held in 2006 in association with forest plan revision efforts generated issues relative to oil and gas leasing. Comments received during those meetings will be considered in this supplemental analysis. The scoping process will assist the agencies in identifying specific issues to be addressed related to the purpose and need and the scope of the decision. Mail comments to the addresses given above for further information. Ongoing information related to the proposed action and related analysis will be posted on the Bridger-Teton National Forest Web site *http://www.fs.fed.us/r4/btnf*.

Preliminary Issues

Preliminary issues associated with the proposed action include:

(1) The drilling and production of wells subsequent to leasing could impact air quality and air quality related values, with emphasis on cumulative effects due to extensive development in the Pinedale area.

(2) The T&E listed Lynx, or its habitat, could be impacted by subsequent exploration and development activities.

(3) Impacts to water quality due to subsequent surface disturbing activities could adversely affect the Colorado River Cutthroat Trout.

(4) The development of a transportation system to support field development could adversely affect mule deer migration routes in the area and fragment habitat.

Comment Requested

This notice of intent initiates the scoping process which guides the development of the supplemental environmental impact statement.

Early Notice of Importance of Public Participation in Subsequent Environmental Review: A Supplemental DEIS will be prepared for comment. The comment period on the SDEIS will be for a perod of 45 days from the date the Environmental Protection Agency publishes the notice of availability in the **Federal Register**.

The Forest Service believes, at this early stage, it is important to give reviewers notice of several court rulings related to public participation in the environmental review process. First, reviewers of a DEIS must structure their participation in the environmental review of the proposal so that it is meaningful and alerts an agency to the reviewer's position and contentions. *Vermont Yankee Nuclear Power Corp.* v. *NRDC, 435 U.S. 519, 553 (1978).* Also, environmental objections that could be raised at the DEIS stage but that are not raised until after completion of the final environmental impact statement may be waived or dismissed by the courts. *City of Angoon* v. *Hodel, 803 F.2d 1016, 1022 (9th Cir. 1986)* and *Wisconsin Heritages, Inc.* v. *Harris, 490 F. Supp. 1334, 1338 (E.D. Wis. 1980).* Because of these court rulings, it is very important that those interested in this proposed action participate by the close of the 45-day comment period so that substantive comments and objections are made available to the Forest Service at a time when it can meaningfully consider them and respond to them in the final environmental impact statement. To assist the Forest Service in identifying and considering issues and concerns on the proposed action, comments on the DEIS should be as specific as possible. It is also helpful if comments refer to specific pages or chapters of the draft statement. Comments may also address the adequacy of the DEIS or the merits of the alternatives formulated and discussed in the statement. Reviewers may wish to refer to the Council on Environmental Quality Regulations for implementing the procedural provisions of the National Environmental Policy Act at 40 CFR 1503.3 in addressing these points.

Comments received, including the names and addresses of those who comment, will be considered part of the public record on this proposal and will be available for public inspection.

(Authority: 40 CFR 1501.7 and 1508.22; Forest Service Handbook 1909.15, Section 21)

Dated: January 25, 2008.

Kniffy Hamilton,

Forest Supervisor, Bridger-Teton National Forest.

Jane D. Darnell,

Acting Wyoming State Director, Bureau of Land Management.

[FR Doc. 08–472 Filed 2–1–08; 8:45 am]

BILLING CODE 3410–11–M

DEPARTMENT OF AGRICULTURE

Forest Service

Clearwater National Forest, ID; Travel Management Plan

AGENCY: Forest Service, USDA.

ACTION: Revised notice; intent to prepare an environmental impact statement. The original notice was published in the **Federal Register** Vol. 72, No. 228, November 28, 2007/Notices, pages 67268–67270. A revised notice was published in the **Federal Register** Vol. 72, No. 243, December 19, 2007/Notices, pages 71874–71876.

SUMMARY: On November 28, 2007, the USDA Forest Service announced its intent to prepare a travel planning environmental impact statement (EIS). The proposed action would designate a site-specific transportation system and prohibit indiscriminate cross-country traffic. The EIS will analyze the effects of the proposed action and alternatives. A Revised Notice was published to extend the due date for scoping comments to January 11, 2008. This Revised Notice is being published because the due date for scoping comments has been extended to February 29, 2008. The Clearwater National Forest invites comments and suggestions on the issues to be addressed. The agency gives notice of the National Environmental Policy Act (NEPA) analysis and decision-making process on the proposal so interested and affected members of the public may participate and contribute to the final decision.

DATES: Comments concerning the scope of the analysis must be received by February 29, 2008. A 45-day public comment period will follow the release of the draft environmental impact statement that is expected in June 2008. The final environmental impact statement is expected in January 2009.

ADDRESSES: Send written or electronic comments to: Lochsa Ranger District, Kamiah Ranger Station; Attn: Lois Foster, Interdisciplinary Team Leader;

Rt. 2, Box 191; Kamiah, ID 83536; Fax 208–935–4275; E-mail *comments-northern-clearwater@fs.fed.us.*

FOR FURTHER INFORMATION CONTACT: Lois Foster, Interdisciplinary Team Leader, (208) 935–4258.

SUPPLEMENTARY INFORMATION: *Purpose and Need for Action* is to (1) Implement national OHV Rule direction, (2) Limit indiscriminate cross-county motorized travel, (3) Designate selected roads and trails for motorized travel, (4) Designate appropriate areas or routes for travel with oversnow vehicles, (5) Balance travel opportunities with maintenance and management capability including costs, (6) Provide for a better spectrum of motorized, non-motorized, and non-mechanized travel opportunities across the CNF in recognition of the need to retain the character of lands recommended for Wilderness designation and the CNF's ability to provide for non-motorized recreation opportunities that are not available on other land ownerships, (7) Manage impacts to Forest resources, (8) Improve clarity and consistency of existing travel restrictions, and (9) Amend the 1987 Forest Plan as necessary to accomplish the actions described above.

The need for revision of the Forest Plan is supported by nationwide awareness within the Forest Service of the negative effects of indiscriminate off-road travel by motorized users. These concerns led to publication of the Travel Management final rule on November 9, 2005 in the **Federal Register,** 36 CFR Parts 212, 251, 261, 295 ''Travel Management: Designated Routes and Areas for Motor Vehicle Use'' (**Federal Register** 2005: 79 FR 68264). The rule requires each National Forest to designate those roads, trails, and areas that are open to motor vehicle use. The rule prohibits use of motor vehicles off the designated system, as well as use of motor vehicles on routes and in areas that are not consistent with the designation. The rule does not require that over-snow vehicles, such as snowmobiles, are limited to a designated system by exempting them under 121.51, but also states in 212.81 that ''use by over-snow vehicles * * * on National Forest system lands may be allowed, restricted, or prohibited.'' The CNF chose to include over-snow vehicles in the analysis.

The Proposed Action would designate motorized road and trail routes for summer travel on the Clearwater National Forest. Existing conditions include roads and trails identified as open to motorized travel in the 2005 Travel Guide, plus any error corrections or project-level NEPA decisions made since then. The Proposed Action would include any changes from existing conditions, such as road to trail conversions, designating some roads previously not thought to be travelable, and not designating some roads that were previously thought to be travelable.

The transportation system for snow-free travel would include:

- 1,623 miles of roads open yearlong to all highway-legal vehicles (an increase of 8 miles compared to existing conditions);
- 509 miles of roads open yearlong to small vehicles such as ATVs and motorcycles, but not including UTVs (an increase of 9 miles);
- 663 miles of roads open seasonally to all highway-legal vehicles (a decrease of 13 miles);
- 151 miles of roads open seasonally to small vehicles (a decrease of 1 mile);
- 93 miles of trails open yearlong to small vehicles (a change of 0 miles);
- 226 miles of trails open yearlong to motorcycles (a decrease of 178 miles);
- 75 miles of trails open seasonally to small vehicles (an increase of 2 miles); and
- 93 miles of trails open seasonally to motorcycles (a change of 0 miles).

The proposed action would also modify the dates of seasonal restrictions for roads and trails to reduce the variety of restricted periods, and ultimately improve the clarity of the Motor Vehicle Use Map (MVUM). Motorized travel up to 300 feet off of designated routes to access established campsites would be permitted in most areas. In certain areas, off-route travel would be permitted only to access specifically designated campsites.

Existing restrictions for bicycles on all but one road would be eliminated. Bicycle restrictions on roads would drop from a total of 10 miles currently to only 1 mile, which would be entirely within the CNF seed orchard. Areas recommended for wilderness by the Forest Plan would become off limits to bicycles. System trails available to bicycles would drop from 811 miles to 730 miles (a reduction of 81 miles).

Over-snow vehicle use would be restricted in areas recommended for wilderness by the Forest Plan. Within the areas where over-snow vehicle use would generally be permitted, there would continue to be some specific routes where over-snow vehicles would be restricted. Over-snow vehicle use would be prohibited forest-wide from October 1 to November 4. The transportation system for over-snow vehicles would include:

- 364 miles of groomed snowmobile routes (no change from existing conditions);
- 1,322,943 acres generally open to over-snow vehicles except for certain restricted routes;
- 3,484 miles of roads where over-snow vehicles would be permitted from November 5 until snowmelt in the spring, compared to 3,174 acres available currently (an increase of 310 acres); and
- 503,057 acres closed to over-snow vehicles, compared to 302,856 acres available currently (a decrease of 200,201 acres).

The numbers above are only approximate at this time.

The existing Forest Plan will be amended. When the Forest Plan was completed in 1987, trail vehicles were few and travel planning was focused almost completely on roads and highway vehicles. Motorized use has increased dramatically since then, and modern vehicles such as snowmobiles, ATV's, and motorcycles have capabilities that could not have been envisioned in 1987. The Forest Plan also contains some conflicting information regarding the intent for management of certain areas. Changes may include:

- Better coordination between the level of motorized travel and the focus of certain management areas, primarily those in roadless areas;
- Additions or changes to Forest Plan standards to permit implementation of the national Travel Management rule; and
- Other goals, objectives, and standards affecting travel management.

Possible Alternatives the Forest Service will consider include a no-action alternative, which will serve as a baseline for comparison of alternatives. The proposed action will be considered along with additional alternatives that will be developed to meet the purpose and need for action, and to address significant issues identified during scoping.

The Responsible Official is Thomas K. Reilly, Clearwater Forest Supervisor, Clearwater National Forest, 12730 Highway 12, Orofino, ID 83544.

The Decision to be Made is whether to adopt the proposed action, in whole or in part, or another alternative; and what mitigation measures and management requirements will be implemented.

The Scoping Period for the EIS is being extended with this notice. The scoping process will identify issues to be analyzed in detail and will lead to the development of alternatives to the proposal. The Forest Service is seeking

information and comments from other Federal, State, and local agencies; Tribal governments; and organizations and individuals who may be interested in or affected by the proposed action. Comments received in response to this notice, including the names and addresses of those who comment, will be part of the project record and available for public review. Public meetings were held on December 18, 19, and 20, 2007. If additional public meetings are scheduled, the times, dates and locations for them will be published in the Lewiston, Idaho *Lewiston Morning Tribune*.

Early Notice of Importance of Public Participation in Subsequent Environmental Review: A draft environmental impact statement will be prepared for comment. The second major opportunity for public input will be when the Draft EIS is published. The comment period on the draft environmental impact statement will be 45 days from the date the Environmental Protection Agency publishes the notice of availability in the **Federal Register**. The Draft EIS is anticipated to be available for public review in June 2008. The comment period on the Draft EIS will be 45 days from the date the Environmental Protection Agency publishes the notice of availability in the **Federal Register**.

The Forest Service believes, at this early stage, it is important to give reviewers notice of several court rulings related to public participation in the environmental review process. First, reviewers of draft environmental impact statements must structure their participation in the environmental review of the proposal so that it is meaningful and alerts an agency to the reviewer's position and contentions (*Vermont Yankee Nuclear Power Corp.* v. *NRDC, 435 U.S. 519, 553 (1978)*). Also, environmental objections that could be raised at the draft environmental impact statement stage but that are not raised until after completion of the final environmental impact statement may be waived or dismissed by the courts (*City of Angoon* v. *Hodel, 803 F.2d 1016, 1022 (9th Cir. 1986) and Wisconsin Heritages, Inc.* v. *Harris, 490 F. Supp. 1334, 1338 (E.D. Wis. 1980)*). Because of these court rulings, it is very important that those interested in this proposed action participate by the close of the comment period for the Draft EIS so that substantive comments and objections are made available to the Forest Service at a time when it can meaningfully consider them and respond to them in the final environmental impact statement.

To assist the Forest Service in identifying and considering issues and concerns on the proposed action, comments on the draft environmental impact statement should be as specific as possible. It is also helpful if comments refer to specific pages or chapters of the draft statement. Comments may also address the adequacy of the draft environmental impact statement or the merits of the alternatives formulated and discussed in the statement. Reviewers may wish to refer to the Council on Environmental Quality Regulations for implementing the procedural provisions of the National Environmental Policy Act at 40 CFR 1503.3 in addressing these points.

After the comment period for the Draft EIS ends, the Forest Service will analyze comments received and address them in the Final EIS. The Final EIS is scheduled to be released by January 2009. The Responsible Official (Forest Supervisor Thomas K. Reilly) will document the decision and rationale in a Record of Decision (ROD). The decision will be subject to review under Forest Service appeal regulations at 36 CFR Part 215.

Preliminary Issues identified by the Forest Service interdisciplinary team include: changing motorized and non-motorized recreation opportunities, costs of road and trail management and maintenance, soil issues, effects on aquatic environments and species, effects on wildlife, the spread of noxious weeds, changes in motorized access to roads, trails and areas that are not designated as part of the travel planning analysis, and motorized access for people with disabilities.

(Authority: 40 CFR 1501.7 and 1508.22; Forest Service Handbook 1909.15, Section 21)

Dated: January 24, 2008.

Thomas K. Reilly,

Clearwater Forest Supervisor.

[FR Doc. 08–470 Filed 2–1–08; 8:45 am]

BILLING CODE 3410–11–M

DEPARTMENT OF AGRICULTURE

Forest Service

Lake Tahoe Basin Federal Advisory Committee

AGENCY: Forest Service, USDA.

ACTION: Notice of meeting.

SUMMARY: The Lake Tahoe Basin Federal Advisory Committee will hold a meeting on February 15, 2008 at the U.S. Forest Service Office, 35 College Drive, South Lake Tahoe, CA 96150. This Committee, established by the Secretary of Agriculture on December 15, 1998 (64 FR 2876), is chartered to provide advice to the Secretary on implementing the terms of the Federal Interagency Partnership on the Lake Tahoe Region and other matters raised by the Secretary.

DATES: The meeting will be held February 15, 2008, beginning at 8:30 a.m. and ending at 10:30 a.m.

ADDRESSES: The meeting will be held at the U.S. Forest Service Office, 35 College Drive, South Lake Tahoe, CA 96150.

FOR FURTHER INFORMATION CONTACT: Arla Hains, Lake Tahoe Basin Management Unit, Forest Service, 35 College Drive, South Lake Tahoe, CA 96150, (530) 543–2773.

SUPPLEMENTARY INFORMATION: Items to be covered on the agenda include: (1) Aquatic Invasive Species update; (2) SNPLMA Round 9; and, (3) Public Comment. All Lake Tahoe Basin Federal Advisory Committee meetings are open to the public. Interested citizens are encouraged to attend at the above address. Issues may be brought to the attention of the Committee during the open public comment period at the meeting or by filing written statements with the secretary for the Committee before or after the meeting. Please refer any written comments to the Lake Tahoe Basin Management Unit at the contact address stated above.

Dated: January 25, 2008.

Terri Marceron,

Forest Supervisor.

[FR Doc. 08–462 Filed 2–1–08; 8:45 am]

BILLING CODE 3410–11–M

DEPARTMENT OF AGRICULTURE

Forest Service

Roadless Area Conservation National Advisory Committee

AGENCY: Forest Service, USDA.

ACTION: Notice of meeting.

SUMMARY: The Roadless Area Conservation National Advisory Committee will meet in Las Vegas, Nevada. The purpose of the meeting is to discuss the proposed rule for the management of roadless areas on National Forest System lands in the State of Idaho and to discuss other related roadless area matters.

DATES: The meeting will be held February 20 to February 21, 2008, from 9 a.m. to 5 p.m each day.

ADDRESSES: The meeting will be held at the University of Nevada Las Vegas (UNLV), Richard Tam Alumni Center,

Fred C. Albrecht Board Room, 4505 South Maryland Parkway, Las Vegas, Nevada. Written comments concerning this meeting should be addressed to Forest Service, U.S. Department of Agriculture, EMC, Jessica Call, 201 14th Street, SW., Mailstop 1104, Washington, DC 20024. Comments may also be sent via e-mail to *jessicacall@fs.fed.us,* or via facsimile to 202–205–1012. All comments, including names and addresses when provided, are placed in the record and are available for public inspection and copying. The public may inspect comments received at the Forest Service, Sidney R.Yates Building, 201 14th Street, SW., Washington, DC. Visitors wanting to inspect comments received are encouraged to call ahead to 202–205–1056 to facilitate entry.

FOR FURTHER INFORMATION CONTACT: Jessica Call, Roadless Area Conservation National Advisory Committee (RACNAC) Coordinator, at *jessicacall@fs.fed.us* or 202–205–1056.

Individuals who use telecommunication devices for the deaf (TDD) may call the Federal Information Relay Service (FIRS) at 1–800–877–8339 between 8 a.m. and 8 p.m., Eastern Standard Time, Monday through Friday.

SUPPLEMENTARY INFORMATION: The meeting is open to the public and interested parties are invited to attend. In order to facilitate meeting logistics, please provide your name to Jessica Call, RACNAC Coordinator by February 15, 2008.

While meeting discussion is limited to Forest Service staff and Committee members, the public will be allowed to offer written and oral comments for the Committee's consideration. Attendees wishing to comment orally will be allotted a specific amount of time to speak. To offer oral comment, please contact the RACNAC Coordinator at 202–205–1056.

Dated: January 29, 2008.

Gloria Manning,

Associate Deputy Chief, NFS.

[FR Doc. E8–2015 Filed 2–1–08; 8:45 am]

BILLING CODE 3410–11–P

DEPARTMENT OF AGRICULTURE

Forest Service

USDA Forest Service Open Space Conservation Strategy

AGENCY: Forest Service, USDA.

ACTION: Notice of Availability.

SUMMARY: The Forest Service is announcing the availability of the agency's Open Space Conservation Strategy. The Strategy provides a framework to strengthen and focus existing and new Forest Service actions for open space conservation. The goal of the Strategy is to conserve open space by protecting the most ecologically and socially important lands, conserving working lands as sustainable forests and grasslands; expanding and connecting open spaces in cities, suburbs, and towns; and reducing the potential ecological impacts and risks of development. The goal will be achieved through collaboration and partnerships—by working with willing landowners, conservation groups and State and local governments to promote voluntary land conservation. In developing the Strategy, the Forest Service solicited public comments through three **Federal Register** Notices: November 13, 2006 (71 FR 66162); December 14, 2006 (71 FR 75228); and June 22, 2007 (70 FR 34430). A total of over 22,000 comments were received during these comment periods.

FOR FURTHER INFORMATION CONTACT: Electronic copies of the Open Space Conservation Strategy document are available at *http://www.fs.fed.us/openspace/OS_Strategy_final_web.pdf* and hardcopies are available by contacting James Melonas, USDA Forest Service, Cooperative Forestry by telephone at (202) 205–1389 or by electronic mail at *openspace@fs.fed.us*. For general information about the Open Space Conservation Strategy and the loss of open space, visit the Forest Service's Open Space Web site: *http://www.fs.fed.us/openspace.* Individuals who use telecommunication devices for the deaf (TDD) may call the Federal Information Relay Service (FIRS) at 1–800–877–8339 between 8 a.m. and 8 p.m., Eastern Standard Time, Monday through Friday.

Dated: January 28, 2008.

James E. Hubbard,

Deputy Chief, State & Private Forestry.

[FR Doc. E8–2010 Filed 2–1–08; 8:45 am]

BILLING CODE 3410–11–P

DEPARTMENT OF AGRICULTURE

Rural Housing Service

Notice of Funds Availability (NOFA) Inviting Applications for the Rural Community Development Initiative (RCDI) for Fiscal Year 2008

AGENCY: Rural Housing Service, USDA.

ACTION: Notice of solicitation of applications.

SUMMARY: This Notice announces the availability of $6,255,900 of competitive grant funds for the RCDI program through the Rural Housing Service (RHS), an agency within the USDA Rural Development mission area herein referred to as the Agency. Applicants must provide matching funds in an amount at least equal to the Federal grant. These grants will be made to qualified intermediary organizations that will provide financial and technical assistance to recipients to develop their capacity and ability to undertake projects related to housing, community facilities, or community and economic development. This Notice lists the information needed to submit an application for these funds.

DATES: The deadline for receipt of an application is 4 p.m. local time, May 5, 2008. The application date and time are firm. The Agency will not consider any application received after the deadline. Applicants intending to mail applications must provide sufficient time to permit delivery on or before the closing deadline date and time. Acceptance by the United States Postal Service or private mailer does not constitute delivery. Facsimile (FAX) and postage due applications will not be accepted.

ADDRESSES: Entities wishing to apply for assistance may download the application requirements delineated in this Notice from the RCDI Web site: *http://www.rurdev.usda.gov/rhs/rcdi/index.htm.* Applicants may also request application packages from the Rural Development office in their State. A list of Rural Development offices is included in this Notice.

FOR FURTHER INFORMATION CONTACT: The Rural Development office for the state the applicant is located in. A list of Rural Development State Office contacts is included in this Notice.

Programs Affected

This program is listed in the Catalog of Federal Domestic Assistance under Number 10.446. This program is not subject to the provisions of Executive Order 12372, which requires intergovernmental consultation with State and local officials because it is not listed by the Secretary of Agriculture, pursuant to 7 CFR 3015.302, as a covered program.

Paperwork Reduction Act

The paperwork burden has been cleared by the Office of Management and Budget (OMB) under OMB Control Number 0575–0180.

National Environmental Policy Act

This document has been reviewed in accordance with 7 CFR part 1940–G, ''Environmental Program.'' Rural

Development has determined that this NOFA does not constitute a major federal action significantly affecting the quality of the human environment, and an Environmental Impact Statement is not required. Furthermore, individual awards under this NOFA are hereby classified as Categorial Exclusions which do not require any additional documentation.

SUPPLEMENTARY INFORMATION:

Overview

Federal Agency: Rural Housing Service.

Funding Opportunity Title: Rural Community Development Initiative.

Announcement Type: Initial Announcement.

Catalog of Federal Domestic Assistance (CFDA) Number: 10.446.

Part I—Funding Opportunity Description

Congress initially created the RCDI in Fiscal Year (FY) 2000 to develop the capacity and ability of nonprofit organizations, low-income rural communities, or federally recognized tribes to undertake projects related to housing, community facilities, or community and economic development in rural areas.

Part II—Award Information

Congress appropriated $6,255,900 in FY 2008 for the RCDI. Qualified private, nonprofit and public (including tribal) intermediary organizations proposing to carry out financial and technical assistance programs will be eligible to receive the funding. The intermediary will be required to provide matching funds in an amount at least equal to the RCDI grant. The respective minimum and maximum grant amount per intermediary is $50,000.00 and $300,000.00. The intermediary must provide a program of financial and technical assistance to a private nonprofit, community-based housing and development organization, a low-income rural community or a federally recognized tribe.

Part III—Eligibility Information

A. Eligible Applicants

1. Qualified private, nonprofit including faith-based and community organizations in accordance with 7 CFR part 16, and public (including tribal) intermediary organizations. Definitions that describe eligible organizations and other key terms are listed below.

2. RCDI grantees that have an outstanding grant over 3 years old, as of the application due date in this Notice, will not be eligible to apply for this round of funding. Grant and matching funds must be utilized in a timely manner to ensure that the goals and objectives of the program are met.

B. Program Definitions

Agency—The Rural Housing Service (RHS) or its successor.

Beneficiary—Entities or individuals that receive benefits from assistance provided by the recipient.

Capacity—The ability of a recipient to implement housing, community facilities, or community and economic development projects.

Federally recognized tribes—Tribal entities recognized and eligible for funding and services from the Bureau of Indian Affairs, based on the current notice in the **Federal Register** published by the Bureau of Indian Affairs. Tribally Designated Housing Entities are eligible RCDI recipients.

Financial Assistance—Funds used by the intermediary to purchase supplies and equipment, not to exceed $10,000 per award, to build the recipient's capacity.

Funds—The RCDI grant and matching money.

Intermediary—A qualified private, nonprofit, or public (including tribal) organization that provides financial and technical assistance to multiple recipients.

Low-income rural community—An authority, district, economic development authority, regional council, or unit of government representing an incorporated city, town, village, county, township, parish, or borough.

Recipient—Under 7 CFR part 15, § 15.2, Recipient means any State, political subdivision of any State, or instrumentality of any State or political subdivision, any public or private agency, institution, or organization, or other entity, to whom Federal financial assistance is extended, directly or through another recipient, including any successor, assignee, or transferee thereof, but such term does not include any ultimate beneficiary. Not all listed entities are eligible for all programs. Please check with the applicable state office for information regarding eligibility.

Rural and rural area—Any area other than (i) a city or town that has a population of greater than 50,000 inhabitants; and (ii) the urbanized area contiguous and adjacent to such city or town.

Technical assistance—Skilled help in improving the recipient's abilities in the areas of housing, community facilities, or community and economic development.

C. Cost Sharing or Matching

Matching funds—Cash or confirmed funding commitments. Matching funds must be at least equal to the grant amount. These funds can only be used for eligible RCDI activities. In-kind contributions such as salaries, donated time and effort, real and nonexpendable personal property and goods and services cannot be used as matching funds. Grant funds and matching funds must be used in equal proportions. This does not mean funds have to be used equally by line item. The request for advance or reimbursement and supporting documentation must show that RCDI fund usage does not exceed the cumulative amount of matching funds used. Grant funds will be disbursed pursuant to relevant provisions of 7 CFR parts 3015, 3016, and 3019, as applicable. Verification of matching funds must be submitted with the application.

The intermediary is responsible for demonstrating that matching funds are available, and committed to the RCDI proposal. Matching funds may be provided by the intermediary or a third party. Other Federal funds may be used as matching funds if authorized by statute and the purpose of the funds is an eligible RCDI purpose.

Matching funds must be used to support the overall purpose of the RCDI program. RCDI funds will be disbursed on an advance or reimbursement basis. Matching funds cannot be expended prior to execution of the RCDI Grant Agreement. No reimbursement will be made for any funds expended prior to execution of the RCDI Grant Agreement unless the grantee is a non-profit or educational entity and has requested and received written Agency approval of the costs prior to the actual expenditure. This exception is applicable for up to 90 days prior to grant closing and only applies to grantees that have received written approval but have not executed the RCDI Grant Agreement. The Agency cannot retroactively approve reimbursement for expenditures prior to execution of the RCDI Grant Agreement.

D. Other Program Requirements

1. The recipient and beneficiary, but not the intermediary, must be located in an eligible rural area. The physical location of the recipient's office that will be receiving the financial and technical assistance must be in an eligible rural area. If the recipient is a low-income community, the median household income of the area where the office is located must be at or below 80 percent of the State or national median

household income, whichever is higher. The applicable Rural Development State Office can assist in determining the eligibility of an area. A listing of Rural Development State Offices is included in this Notice.

2. The recipients must be private, nonprofit, including faith-based organizations, community-based housing and development organizations, low-income rural communities, or federally recognized tribes based on the RCDI definitions of these groups.

3. Documentation must be submitted to verify recipient eligibility. Acceptable documentation varies depending on the type of recipient. Private nonprofit faith or community-based housing and development organizations must provide a certificate of incorporation and good standing from the Secretary of the State of incorporation, or other similar and valid documentation of nonprofit status. For low-income rural community recipients, the Agency requires evidence that the entity is a public body and census data verifying that the median household income of the community where the office receiving the financial and technical assistance is located at, or below, 80 percent of the State or national median household income, whichever is higher. For Federally recognized tribes, the Agency needs the page listing their name from the current **Federal Register** list of tribal entities recognized and eligible for funding services (see the definition of Federally recognized tribes in this Notice for details on this list).

4. Individuals cannot be recipients.

5. The intermediary must provide matching funds at least equal to the amount of the grant. Verification of matching funds must be submitted with the application.

6. The intermediary must provide a program of financial and technical assistance to the recipient.

7. The intermediary organization must have been legally organized for a minimum of 3 years and have at least 3 years prior experience working with private nonprofit community-based housing and development organizations, low-income rural communities, or tribal organizations in the areas of housing, community facilities, or community and economic development.

8. Proposals must be structured to utilize the grant funds within 3 years from the date of the award.

9. Each applicant, whether singularly or jointly, may only submit one application for RCDI funds under this NOFA. This restriction does not preclude the applicant from providing matching funds for other applications.

10. Recipients can benefit from more than one RCDI application; however, after grant selections are made, the recipient can only benefit from multiple RCDI grants if the type of financial and technical assistance the recipient will receive is not duplicative.

11. The intermediary and the recipient cannot be the same entity. The recipient can be a related entity to the intermediary, if it meets the definition of a recipient.

12. A nonprofit recipient must provide evidence that it is a valid nonprofit when the intermediary applies for the RCDI grant. Organizations with pending requests for nonprofit designations are not eligible.

13. If the recipient is a low-income rural community, identify the unit of government to which the financial and technical assistance will be provided, e.g., town council or village board. The financial and technical assistance must be provided to the organized unit of government representing that community, not the community at large.

14. Recipients located in a rural area that is also a census designated place (CDP) are eligible recipients.

15. If a grantee has an outstanding RCDI grant over 3 years old, as of the application due date in this Notice, it is not eligible to apply for this round of funding.

16. The indirect cost category in the project budget should be used only when a grant applicant has a federally negotiated indirect cost rate. If the applicant will charge indirect costs to the grant, a copy of the current rate agreement must be provided with the application.

Eligible Fund Uses

Fund uses must be consistent with the RCDI purpose. A nonexclusive list of eligible grant uses includes the following:

1. Provide technical assistance to develop recipients' capacity and ability to undertake projects related to housing, community facilities, or community and economic development, *i.e.,* the intermediary hires a staff person to provide technical assistance to the recipient or the recipient hires a staff person, under the supervision of the intermediary, to carry out the technical assistance provided by the intermediary.

2. Develop the capacity of recipients to conduct community development programs, *e.g.,* homeownership education or training for business entrepreneurs.

3. Develop the capacity of recipients to conduct development initiatives, *e.g.,* programs that support micro-enterprise and sustainable development.

4. Develop the capacity of recipients to increase their leveraging ability and access to alternative funding sources by providing training and staffing.

5. Develop the capacity of recipients to provide the technical assistance component for essential community facilities projects.

6. Assist recipients in completing pre-development requirements for housing, community facilities, or community and economic development projects by providing resources for professional services, *e.g.,* architectural, engineering, or legal.

7. Improve recipient's organizational capacity by providing training and resource material on developing strategic plans, board operations, management, financial systems, and information technology.

8. Purchase computers, software, and printers at the recipient level when directly related to the technical assistance program being undertaken by the intermediary.

9. Provide funds to recipients for training-related travel costs and training expenses related to RCDI.

Ineligible Fund Uses

1. Pass-through grants, capacity grants, and any funds provided to the recipient in a lump sum that are not reimbursements.

2. Funding a revolving loan fund (RLF).

3. Construction (in any form).

4. Salaries for positions involved in construction, renovations, rehabilitation, and any oversight of these types of activities.

5. Intermediary preparation of strategic plans for recipients.

6. Funding prostitution, gambling, or any illegal activities.

7. Grants to individuals.

8. Funding a grant where there may be a conflict of interest, or an appearance of a conflict of interest, involving any action by the Agency.

9. Paying obligations incurred before the beginning date without prior Agency approval or after the ending date of the grant agreement.

10. Purchasing real estate.

11. Improvement or renovation of the grantee's, or recipient's office space or for the repair or maintenance of privately owned vehicles.

12. Any other purpose prohibited in 7 CFR parts 3015, 3016, and 3019, as applicable.

13. Using funds for recipient's general operating costs.

14. Using grant or matching funds for Individual Development Accounts.

15. Purchasing vehicles.

Program Examples

The purpose of this initiative is to develop or increase the recipient's capacity through a program of financial and technical assistance to perform in the areas of housing, community facilities, or community and economic development. Strengthening the recipient's capacity in these areas will benefit the communities they serve. The RCDI structure requires the intermediary (grantee) to provide a program of financial and technical assistance to recipients. The recipients will, in turn, provide programs to their communities (beneficiaries). The following are examples of eligible and ineligible purposes under the RCDI program. (These examples are illustrative and are not meant to limit the activities proposed in the application. Activities that meet the objective of the RCDI program will be considered eligible.)

1. The intermediary must work directly with the recipient, not the ultimate beneficiaries. As an example: The intermediary provides training to the recipient on how to conduct homeownership education classes. The recipient then provides ongoing homeownership education to the residents of the community—the ultimate beneficiaries. This ''train the trainer'' concept fully meets the intent of this initiative. The intermediary is providing technical assistance that will build the recipient's capacity by enabling them to conduct homeownership education classes for the public. This is an eligible purpose. However, if the intermediary directly provided homeownership education classes to individuals in the recipient's service area, this would not be an eligible purpose because the recipient would be bypassed.

2. If the intermediary is working with a low-income community as the recipient, the intermediary must provide the technical assistance to the entity that represents the low-income community and is identified in the application. Examples of entities representing a low-income community are a village board or a town council. If the intermediary provides technical assistance to the board of directors of the low-income community on how to establish a cooperative, this would be an eligible purpose. However, if the intermediary works directly with individuals from the community to establish the cooperative, this is not an eligible purpose. The recipient's capacity is built by learning skills that will enable them to support sustainable economic development in their communities on an ongoing basis.

3. The intermediary may provide technical assistance to the recipient on how to create and operate a RLF. The intermediary may not monitor or operate the RLF. RCDI funds, including matching funds, cannot be used to fund RLFs.

Part IV—Application and Submission Information

A. Address To Request Application Package

Entities wishing to apply for assistance may download the application documents and requirements delineated in this Notice from the RCDI Web site: *http://www.rurdev.usda.gov/rhs/rcdi/index.htm.* Application information for electronic submissions may be found at *http://www.grants.gov.* Applicants may also request paper application packages from the Rural Development office in their state. A list of Rural Development offices is included in this Notice.

B. Content and Form of Application Submission

If the applicant is ineligible or the application is incomplete, the Agency will inform the applicant in writing of the decision, reasons therefore, and its appeal rights, and no further evaluation of the application will occur.

A complete application for RCDI funds must include the following:

1. A summary page, double-spaced between items, listing the following: (This information should not be presented in narrative form.)

a. Applicant's name,

b. Applicant's address,

c. Applicant's telephone number,

d. Name of applicant's contact person and telephone number,

e. Applicant's fax number,

f. County where applicant is located,

g. Congressional district number where applicant is located,

h. Amount of grant request,

i. Applicant's Tax Identification Number,

j. Data Universal Numbering System (DUNS) number (Applicant Only),

k. Number of recipients,

l. Equal Opportunity Survey, OMB No. 1890–0014 Exp. 02/28/09 (optional completion by applicant)

1. Source and amount of matching funds.

2. A detailed Table of Contents containing page numbers for each component of the application.

3. A project overview, no longer than five pages, including the following items, which will also be addressed separately and in detail under ''Building Capacity'' of the ''Evaluation Criteria.''

a. The type of technical assistance to be provided to the recipients and how it will be implemented.

b. How the capacity and ability of the recipients will be improved.

c. The overall goals to be accomplished.

d. The benchmarks to be used to measure the success of the program.

4. Organizational documents, such as a certificate of incorporation and a current good standing certification from the Secretary of State where the applicant is incorporated and other similar and valid documentation of non-profit status, from the intermediary that confirms it has been legally organized for a minimum of 3 years as the applicant entity.

5. Verification of matching funds, *i.e.,* a copy of a bank statement if matching funds are in cash or a copy of the confirmed funding commitment from the funding source. The verification of matching funds must be submitted with the application. The applicant will be contacted by the Agency prior to grant award to verify that the matching funds continue to be available. The applicant will have 10 working days from the date contacted to submit verification of matching funds. If the applicant is unable to provide the verification within that timeframe, the application will be considered ineligible. The applicant must maintain bank statements on file or other documentation for a period of at least three years after grant closing except that the records shall be retained beyond the three-year period if audit findings have not been resolved.

6. Applicant should verify that they have a DUNS number. Applicants can receive a DUNS number at no cost by calling the dedicated toll-free DUNS number request line at 1–866–705–5711.

7. The following information for each recipient:

a. Recipient's entity name,

b. Complete address (mailing and physical location, if different),

c. County where located,

d. Number of Congressional district where recipient is located, and

e. Contact person's name and telephone number.

8. Submit evidence that each recipient entity is eligible:

a. *Nonprofits*—provide a current valid letter confirming non-profit status from the Secretary of the State of incorporation or the IRS, a current good standing certification from the Secretary of the State of incorporation, or other valid documentation of non-profit status of each recipient.

b. *Low-income rural community*—provide evidence the entity is a public body, and a copy of the 2000 census data to verify the population, and evidence that the median household income is at, or below, 80 percent of either the State or national median household income. We will only accept data from *http://www.census.gov.* The specific instructions to retrieve data from this site are detailed under the ''Evaluation Criteria'' for ''Population'' and ''Income.''

c. *Federally recognized tribes*—provide the page listing their name from the current **Federal Register** list of tribal entities published on November 25, 2005 (70 FR 71194) by the Bureau of Indian Affairs.

9. Each of the ''Evaluation Criteria'' must be addressed specifically and individually by category. Present these criteria in narrative form. Documentation must be limited to three pages per criterion. The ''Population'' and ''Income'' criteria for recipient locations can be provided in the form of a list; however, the source of the data must be included on the page(s).

10. A timeline identifying specific activities and proposed dates for completion.

11. A detailed project budget that includes the RCDI grant amount and matching funds for the duration of the grant. This should be a line-item budget, by category. Categories such as salaries, administrative, other, and indirect costs that pertain to the proposed project must be clearly defined. Supporting documentation listing the components of these categories must be included. The budget should be dated: Year 1, year 2, year 3.

12. *Form SF–424,* ''Application for Federal Assistance.'' (Do not complete Form SF–424A, ''Budget Information.'' A separate line-item budget should be presented as described in No. 11 of this section.)

13. *Form SF–424B,* ''Assurances—Non-Construction Programs.''

14. *Form AD–1047,* ''Certification Regarding Debarment, Suspension, and Other Responsibility Matters—Primary Covered Transactions.''

15. *Form AD–1048,* ''Certification Regarding Debarment, Suspension, Ineligibility and Voluntary Exclusion—Lower Tier Covered Transactions.

16. *Form AD–1049,* ''Certification Regarding Drug-Free Workplace Requirements.''

17. Certification of Non-Lobbying Activities.

18. *Standard Form LLL,* ''Disclosure of Lobbying Activities,'' if applicable.

19. *Form RD 400–4,* ''Assurance Agreement,'' for the applicant and each recipient.

20. Identify and report any association or relationship with Rural Development employees.

The required forms and certifications can be downloaded from the RCDI Web site at: *http://www.rurdev.usda.gov/rhs/rcdi/index.htm.*

C. Other Submission Information

The original application package must be submitted to the Rural Development State Office where the applicant is located. A listing of Rural Development State Offices is included in this Notice. Applications will not be accepted via facsimile or electronic mail.

Applicants may file an electronic application at *http://www.grants.gov. Grants.gov* contains full instructions on all required passwords, credentialing, and software. Follow the instructions at *Grants.gov* for registering and submitting an electronic application.

If a system problem or technical difficulty occurs with an electronic application, please use the customer support resources available at the *Grants.gov* Web site.

Technical difficulties submitting an application through *Grants.gov* will not be a reason to extend the application deadline. If an application is unable to be submitted through *Grants.gov*, a paper application must be received in the appropriate State Office by the deadline noted previously.

First time *Grants.gov* users should go to the ''Get Started'' tab on the *Grants.gov* site and carefully read and follow the steps listed. These steps need to be initiated early in the application process to avoid delays in submitting your application online. Step three, Registering with the Central Contractor Registry (CCR), will take some time to complete. Keep that in mind when beginning the application process.

In order to register with the CCR, your organization will need a DUNS number. A DUNS number is a unique nine-character identification number provided by the commercial company, Dun & Bradstreet (D&B). To investigate if your organization already has a DUNS number or to obtain a DUNS number, contact Dun & Bradstreet at 1–866–705–5711. Be sure to complete the Marketing Partner ID (MPID) and Electronic Business Primary Point of Contact fields during the CCR registration process. These are mandatory fields that are required when submitting grant applications through *Grants.gov*. Information about registering with CCR was published in a Notice in the **Federal Register** entitled ''HHS Managing Partner *Grants.gov* E-Government Initiative'' on January 17, 2006, (71 FR 2549) by the Federal Reserve System. Additional application instructions for submitting an electronic application can be found by selecting this funding opportunity on *Grants.gov*.

The deadline for receipt of an application is 4 p.m. local time May 5, 2008. The application deadline date and time are firm and apply to submission of the original application to the Rural Development State Office where the applicant is located. The Agency will not consider any application received after the deadline. A listing of Rural Development State Offices, their addresses, telephone numbers, and person to contact is provided elsewhere in this Notice. Applicants intending to mail applications must provide sufficient time to permit delivery on or before the closing deadline date and time. Acceptance by the United States Postal Service or private mailer does not constitute delivery. Facsimile (FAX), electronic mail or postage due applications will not be accepted.

D. Funding Restrictions

Meeting expenses. In accordance with 31 U.S.C. 1345, ''Expenses of Meetings,'' appropriations may not be used for travel, transportation, and subsistence expenses for a meeting. RCDI grant funds cannot be used for these meeting-related expenses. Matching funds may be used to pay for these expenses. RCDI funds may be used to pay for a speaker as part of a program, equipment to facilitate the program, and the actual room that will house the meeting. RCDI funds can be used for travel, transportation, or subsistence expenses for training and technical assistance purposes. Any meeting or training not delineated in the application must be approved by the Agency to verify compliance with 31 U.S.C. 1345. Travel and per diem expenses will be similar to those paid to Agency employees. Rates are based upon location. Rate information can be obtained from the applicable State Office.

Grantees and recipients will be restricted to traveling coach class on common carrier airlines. Grantees and recipients may exceed the Government rate for lodging by a maximum of 20 percent. Meals and incidental expenses will be reimbursed at the same rate used by Agency employees. Mileage and gas reimbursement will be the same rate used by Agency employees. The current mileage and gas reimbursement rate is 48.5 cents per mile.

Part V—Application Review Information

A. Evaluation Criteria

Applications will be evaluated using the following criteria and weights:

1. *Building Capacity*—Maximum 60 Points.

The applicant must demonstrate how they will improve the recipients' capacity, through a program of financial and technical assistance, as it relates to the RCDI purposes. Capacity-building financial and technical assistance should provide new functions to the recipients or expand existing functions that will enable the recipients to undertake projects in the areas of housing, community facilities, or community and economic development that will benefit the community. The program of financial and technical assistance provided, its delivery, and the measurability of the program's effectiveness will determine the merit of the application. All applications will be competitively ranked with the applications providing the most improvement in capacity development and measurable activities being ranked the highest. Capacity-building financial and technical assistance may include, but is not limited to: Training to conduct community development programs, *e.g.*, homeownership education, or the establishment of minority business entrepreneurs, cooperatives, or micro-enterprises; organizational development, *e.g.*, assistance to develop or improve board operations, management, and financial systems; instruction on how to develop and implement a strategic plan; instruction on how to access alternative funding sources to increase leveraging opportunities; staffing, *e.g.*, hiring a person at intermediary or recipient level to provide technical assistance to recipients; and purchasing technology equipment at the recipient level, *e.g.*, computers, printers, and software.

a. The narrative response must:

1. Describe the nature of financial and technical assistance to be provided to the recipients and the activities that will be conducted to deliver the technical assistance;

2. Explain how financial and technical assistance will develop or increase the recipient's capacity. Indicate whether a new function is being developed or if existing functions are being expanded or performed more effectively;

3. Identify which RCDI purpose areas will be addressed with this assistance: Housing, community facilities, or community and economic development; and

4. Describe how the results of the technical assistance will be measured. What benchmarks will be used to measure effectiveness?

b. *The maximum 60 points for this criterion will be broken down as follows:*

1. Type of financial and technical assistance and implementation activities. 35 points.

2. An explanation of how financial and technical assistance will develop capacity. 10 points.

3. Identification of the RCDI purpose. 5 points.

4. Measurement of outcomes. 10 points.

2. *Expertise*—Maximum 30 Points.

The applicant must demonstrate that it has conducted programs of financial and technical assistance and achieved measurable results in the areas of housing, community facilities, or community and economic development in rural areas. Provide the name, contact information, and the type and amount of the financial and technical assistance the applicant organization has provided to the following for the last 5 years:

a. Nonprofit organizations in rural areas.

b. Low-income communities in rural areas, (also include the type of entity, *e.g.*, city government, town council, or village board).

c. Federally recognized tribes or any other culturally diverse organizations.

3. *Population*—Maximum 30 Points.

Population is based on the average population from the 2000 census data for the communities in which the recipients are located. Community is defined for scoring purposes as a city, town, village, county, parish, borough, or census-designated place where the recipient's office is physically located. The applicant must submit the census data from the following Web site to verify the population figures used for each recipient. The data can be accessed on the Internet at *http://www.census.gov;* click on ''American FactFinder'' from the left menu; click on ''Fact Sheet'' from the left menu; at the right, fill in one or more fields and click ''Go''; the name and population data for each recipient location must be listed in this section. The average population of the recipient locations will be used and will be scored as follows:

Population	Scoring (points)
5,000 or less	30
5,001 to 10,000	20
10,001 to 20,000	10
20,001 to 50,000	5

4. *Income*—Maximum 30 Points.

The average of the median household income for the communities where the recipients are physically located will determine the points awarded. Applicants may compare the average recipient median household income to the State median household income or the national median household income, whichever yields the most points. The national median household income to be used is $41,994. The applicant must submit the income data from the following Web site to verify the income for each recipient. The data being used is from the 2000 census. The data can be accessed on the Internet at *http://www.census.gov;* click on ''American FactFinder'' from the left menu; click on ''Fact Sheet'' from the left menu; at the right, fill in one or more fields and click ''Go''; the name and income data for each recipient location must be listed in this section. Points will be awarded as follows:

Average Recipient Median Income Is

Less than 60 percent of the state or national median household income. 30 points.

Between 60 and 70 percent of the state or national median household income. 20 points.

Greater than 70 percent of the state or national median household income. 10 points.

5. *Soundness of Approach*—Maximum 50 Points.

The applicant can receive up to 50 points for soundness of approach. The overall proposal will be considered under this criterion. Applicants must list the page numbers in the application that address these factors.

a. The ability to provide the proposed financial and technical assistance based on prior accomplishments has been demonstrated.

b. The proposed financial and technical assistance program is clearly stated and the applicant has defined how this proposal will be implemented. The plan for implementation is viable.

c. Cost effectiveness will be evaluated based on the budget in the application. The proposed grant amount and matching funds should be utilized to maximize capacity building at the recipient level.

d. The proposal fits the objectives for which applications were invited.

6. *Technical Assistance for the Development of Renewable Energy Systems and Energy Efficiency Improvements*—20 Points.

The applicant must demonstrate how they will improve the recipients' capacity to carry out activities related to the development of renewable energy systems and energy efficiency

improvements for housing, community facilities, or community and economic development.

7. State Director's Points Based on Project Merit—20 Points.

An additional 20 points may be awarded by the Rural Development State Director for the state's first priority project. Only one project per state will be awarded these points.

Points may be awarded based on the Rural Development State Office's strategic plan. Assignment of points will include a written justification.

8. Proportional Distribution Points—20 Points.

This criteria does not have to be addressed by the applicant. After applications have been evaluated and awarded points under the first 7 criteria, the Agency may award 20 points per application to promote an even distribution of grant awards between the ranges of $50,000.00 to $300,000.00. Proportional distribution may also include applicants in states that have not had a nonprofit organization as a recipient in the previous two years.

B. Review and Selection Process

Rating and ranking. Applications will be rated and ranked on a national basis by a review panel based on the ''Evaluation Criteria'' contained in this Notice. If there is a tied score after the applications have been rated and ranked, the tie will be resolved by reviewing the scores for ''Building Capacity'' and the applicant with the highest score in that category will receive a higher ranking. If the scores for ''Building Capacity'' are the same, the scores will be compared for the next criterion, in sequential order, until one highest score can be determined.

Initial screening. The Agency will screen each application to determine eligibility during the period immediately following the application deadline. Listed below are many of the reasons for rejection from previous funding rounds to help the applicant prepare a better application. The following reasons for rejection are not all inclusive; however, they represent the majority of the applications previously rejected.

1. Recipients were not located in eligible rural areas based on the definition in this Notice.

2. Applicants failed to provide evidence of recipient's status, i.e., documentation supporting nonprofit evidence of organization.

3. Applicants failed to provide evidence of committed matching funds.

4. Application did not follow the RCDI structure with an intermediary and recipients.

5. Recipients were not identified in the application.

6. Intermediary did not provide evidence it had been incorporated for at least 3 years as the applicant entity.

7. Applicants failed to address the ''Evaluation Criteria.''

8. The purpose of the proposal did not qualify as an eligible RCDI purpose.

9. Inappropriate use of funds (*e.g.,* construction or renovations).

10. Providing financial and technical assistance directly to individuals.

Part VI—Award Administration Information

A. General Information

Within the limit of funds available for such purpose, the awarding official of the Agency shall make grants to those responsible, eligible applicants whose applications are judged meritorious under the procedures set forth in this Notice.

B. Award Notice

Applicant will be notified of selection by letter. In addition, applicant will be requested to verify that components of the application have not changed. The award is not approved until all information has been verified, and the awarding official of the Agency has signed Form RD 1940–1, ''Request for Obligation of Funds.''

C. Administrative and National Policy Requirements

Grantees will be required to do the following:

1. Execute a Rural Community Development Initiative Grant Agreement, which is published at the end of this Notice.

2. *Execute Form RD 1940–1,* ''Request for Obligation of Funds.''

3. *Use Form SF 270,* ''Request for Advance or Reimbursement,'' to request reimbursements. Provide receipts for expenditures, timesheets and any other documentation to support the request for reimbursement.

4. Provide financial status and project performance reports on a quarterly basis starting with the first full quarter after the grant award.

5. Maintain a financial management system that is acceptable to the Agency.

6. Ensure that records are maintained to document all activities and expenditures utilizing RCDI grant funds and matching funds. Receipts for expenditures will be included in this documentation.

7. Provide annual audits or management reports on Form RD 442–2, ''Statement of Budget, Income and Equity,'' and Form RD 442–3, ''Balance Sheet,'' depending on the amount of Federal funds expended and the outstanding balance.

8. Collect and maintain data provided by recipients on race, sex, and national origin and ensure recipients collect and maintain the same data on beneficiaries. Race and ethnicity data will be collected in accordance with OMB **Federal Register** notice, ''Revisions to the Standards for the Classification of Federal Data on Race and Ethnicity,'' (62 FR 58782), October 30, 1997. Sex data will be collected in accordance with Title IX of the Education Amendments of 1972. These items should not be submitted with the application but should be available upon request by the Agency.

9. Provide a final project performance report.

10. Identify and report any association or relationship with Rural Development employees on a format provided by the Agency.

11. The intermediary and recipient must comply with Title VI of the Civil Rights Act of 1964, Title IX of the Education Amendments of 1972, Section 504 of the Rehabilitation Act of 1973, and Executive Order 12250.

12. The grantee must comply with policies, guidance, and requirements as described in the following applicable OMB Circulars and Code of Federal Regulations:

a. OMB Circular A–87 (Cost Principles for State, Local, and Indian Tribal Government);

b. OMB Circular A–122 (Cost Principles for Nonprofit Organizations);

c. OMB Circular A–133 (Audits of States, Local Governments, and Non-Profit Organizations);

d. 7 CFR part 3015 (Uniform Federal Assistance Regulations);

e. 7 CFR part 3016 (Uniform Administrative Requirements for Grants and Cooperative Agreements to State and Local Governments);

f. 7 CFR part 3017 (Governmentwide Debarment and Suspension (Nonprocurement));

g. 7 CFR part 3019 (Uniform Administrative Requirements for Grants and Agreements with Institutions of Higher Education, Hospitals, and Other Non-profit Organizations); and

h. 7 CFR part 3052 (Audits of States, Local Governments, and Non-Profit Organizations).

D. Reporting

Reporting requirements can be found in the Grant Agreement included in this Notice.

Part VII—Agency Contact

Contact the Rural Development office in the state where the applicant is

located. A list of Rural Development offices is included in this Notice.

Part VIII—Nondiscrimination Statement

The U.S. Department of Agriculture (USDA) prohibits discrimination in all its programs and activities on the basis of race, color, national origin, age disability, and where applicable, sex, marital status, familial status, parental status, religion, sexual orientation, genetic information, political beliefs, reprisal, or because all or part of an individual's income is derived from any public assistance program. (Not all prohibited bases apply to all programs.) Persons with disabilities who require alternative means for communication of program information (Braille, large print, audiotape, etc.) should contact USDA's TARGET Center at (202) 720–2600 (voice and TDD). To file a complaint of discrimination, write to USDA, Director, Office of Civil Rights, 1400 Independence Avenue, SW., Washington, DC 20250–9410, or call (800) 795–3272 (voice) or (202) 720–6382 (TDD). USDA is an equal opportunity provider and employer.

Grant Amount Determination

In the event the applicant is awarded a grant that is less than the amount requested, the applicant will be required to modify its application to conform to the reduced amount before execution of the grant agreement. The Agency reserves the right to reduce or withdraw the award if acceptable modifications are not submitted by the awardee within 15 working days from the date the request for modification is made. Any modifications must be within the scope of the original application.

Rural Development State Office Contacts

Note: Telephone numbers listed are not toll-free.

Alabama State Office,
Suite 601, Sterling Centre, 4121 Carmichael Road, Montgomery, AL 36106–3683, (334) 279–3400, TDD (334) 279–3495, Chris Harmon.

Alaska State Office,
800 West Evergreen, Suite 201, Palmer, AK 99645, (907) 761–7705, TDD (907) 761–8905, Merlaine Kruse.

Arizona State Office,
230 North 1st Avenue, Suite 206, Phoenix, AZ 85003, (602) 280–8747, TDD (602) 280–8705, Leonard Gradillas.

Arkansas State Office,
700 W. Capitol Ave., Rm. 3416, Little Rock, AR 72201–3225, (501) 301–3250, TDD (501) 301–3200, Jerry Virden.

California State Office,
430 G Street, Agency 4169, Davis, CA 95616–4169, (530) 792–5810, TDD (530) 792–5848, Janice Waddell.

Colorado State Office,
655 Parfet Street, Room E–100, Lakewood, CO 80215, 720–544–2927, TDD 720–544–2976, Delores Sanchez-Maez.

Connecticut,
Served by Massachusetts State Office.

Delaware and Maryland State Office,
1221 College Park Dr., Suite 200, Dover, DE 19904–8713, (302) 857–3580, TDD (302) 697–4303, James E. Waters.

Florida & Virgin Islands State Office,
4440 NW. 25th Place, P.O. Box 147010, Gainesville, FL 32614–7010, (352) 338–3485, TDD (352) 338–3499, Michael Langston.

Georgia State Office,
Stephens Federal Building, 355 E. Hancock Avenue, Athens, GA 30601–2768, (706) 546–2171, TDD (706) 546–2034, Jerry M. Thomas.

Guam,
Served by Hawaii State Office.

Hawaii, Guam, & Western Pacific Territories State Office,
Room 311, Federal Building, 154 Waianuenue Avenue, Hilo, HI 96720, (808) 933–8310, TDD (808) 933–8321, Ted Matsuo.

Idaho State Office,
9173 West Barnes Dr., Suite A1, Boise, ID 83709, (208) 378–5617, TDD (208) 378–5600, Daniel H. Fraser.

Illinois State Office,
2118 West Park Court, Suite A, Champaign, IL 61821, (217) 403–6211, TDD (217) 403–6240, Patrick Lydic.

Indiana State Office,
5975 Lakeside Boulevard, Indianapolis, IN 46278–1996, (317) 290–3100 (ext. 431), TDD (317) 290–3343, Gregg Delp.

Iowa State Office,
873 Federal Building, 210 Walnut Street, Des Moines, IA 50309, (515) 284–4663, TDD (515) 284–4858, Karla Peiffer.

Kansas State Office,
1303 SW. First American Place, Suite 100, Topeka, KS 66604–4040, (785) 271–2730, TDD (785) 271–2767, Gary L. Smith.

Kentucky State Office,
771 Corporate Drive, Suite 200, Lexington, KY 40503, (859) 224–7336, TDD (859) 224–7300, Vernon Brown.

Louisiana State Office,
3727 Government Street, Alexandria, LA 71302, (318) 473–7962, TDD (318) 473–7920, Richard Hoffpauir.

Maine State Office,
967 Illinois Ave., Suite 4, P.O. Box 405, Bangor, ME 04402–0405, (207) 990–9124, TDD (207) 942–7331, Ron Lambert.

Maryland,
Served by Delaware State Office.

Massachusetts, Connecticut, & Rhode Island State Office,
451 West Street, Suite 2, Amherst, MA 01002–2999, (413) 253–4300, TDD (413) 253–7068, Daniel R. Beaudette.

Michigan State Office,
3001 Coolidge Road, Suite 200, East Lansing, MI 48823, (517) 324–5208, TDD (517) 337–6795, Frank J. Tuma.

Minnesota State Office,
410 Farm Credit Service Building, 375 Jackson Street, St. Paul, MN 55101–1853, (651) 602–7800, TDD (651) 602–3799. William Slininger.

Mississippi State Office,
Federal Building, Suite 831, 100 W. Capitol Street, Jackson, MS 39269, (601) 965–4316, TDD (601) 965–5850. Bettye Oliver.

Missouri State Office,
601 Business Loop 70 West, Parkade Center, Suite 235, Columbia, MO 65203, (573) 876–0976, TDD (573) 876–9480. Clark Thomas.

Montana State Office,
900 Technology Blvd., Suite B, Bozeman, MT 59771, (406) 585–2530, TDD (406) 585–2562. John Guthmiller.

Nebraska State Office,
Federal Building, Room 152, 100 Centennial Mall N., Lincoln, NE 68508, (402) 437–5559, TDD (402) 437–5551. Denise Brosius-Meeks.

Nevada State Office,
1390 South Curry Street, Carson City, NV 89703–9910, (775) 887–1222 (ext. 19), TDD (775) 885–0633. Kay Vernatter.

New Hampshire
Served by Vermont State Office.

New Jersey State Office,
8000 Midlantic Drive, 5th Floor North, Suite 500, Mt. Laurel, NJ 08054, (856) 787–7750. Kenneth Drewes.

New Mexico State Office,
6200 Jefferson St. NE., Room 255, Albuquerque, NM 87109, (505) 761–4950, TDD (505) 761–4938. Martha Torrez.

New York State Office,
The Galleries of Syracuse, 441 S. Salina Street, Suite 357, Syracuse, NY 13202–2541, (315) 477–6400, TDD (315) 477–6447. Gail Giannotta.

North Carolina State Office,
4405 Bland Road, Suite 260, Raleigh, NC 27609, (919) 873–2000, TDD (919) 873–2003. Roger Davis.

North Dakota State Office,
Federal Building, Room 208, 220 East Rosser Ave., P.O. Box 1737, Bismarck, ND 58502–1737, (701) 530–2037, TDD (701) 530–2113. Dale VanEchout.

Ohio State Office,
Federal Building, Room 507, 200 North High Street, Columbus, OH 43215–2418, (614) 255–2400, TDD (614) 255–2554. David M. Douglas.

Oklahoma State Office,
100 USDA, Suite 108, Stillwater, OK 74074–2654, (405) 742–1000, TDD (405) 742–1007. Michael W. Schrammel.

Oregon State Office,
1201 NE Lloyd Blvd., Suite 801, Portland, OR 97232, (503) 414–3300, TDD (503) 414–3387. John J. Brugger.

Pennsylvania State Office,
One Credit Union Place, Suite 330, Harrisburg, PA 17110–2996, (717) 237–2299, TDD (717) 237–2261. Gary Rothrock.

Puerto Rico State Office,
IBM Building—Suite 601, 654 Munos Rivera Avenue, San Juan, PR 00918–6106, (787) 766–5095, TDD (787) 766–5332. Ramon Melendez.

Rhode Island
Served by Massachusetts State Office.

South Carolina State Office,

Strom Thurmond Federal Building, 1835 Assembly Street, Room 1007, Columbia, SC 29201, (803) 253–3656, TDD (803) 765–5697. Ken King.

South Dakota State Office,
Federal Building, Room 210, 200 Fourth Street, SW., Huron, SD 57350, (605) 352–1100, TDD (605) 352–1147. Doug Roehl.

Tennessee State Office,
Suite 300, 3322 West End Avenue, Nashville, TN 37203–1084, (615) 783–1300, TDD (615) 783–1397. Keith Head.

Texas State Office,
Federal Building, Suite 102, 101 South Main, Temple, TX 76501, (254) 742–9700, TDD (254) 742–9712. Francesco Valentin.

Utah State Office,
Wallace F. Bennett Federal Building, 125 South State Street, Room 4311, P.O. Box 11350, Salt Lake City, UT 84138, (801) 524–4326, TDD (801) 524–3309. Bonnie Carrig.

Vermont State Office,
City Center, 3rd Floor, 89 Main Street, Montpelier, VT 05602, (802) 828–6030, TDD (802) 223–6365. Rhonda Shippee.

Virgin Islands
Served by Florida State Office.

Virginia State Office,
Culpeper Building, Suite 238, 1606 Santa Rosa Road, Richmond, VA 23229, (804) 287–1550, TDD (804) 287–1753. Carrie Schmidt.

Washington State Office,
1835 Black Lake Boulevard, SW., Suite B, Olympia, WA 98501–5715, (360) 740–7738. Gayle Hoskison.

Western Pacific Territories
Served by Hawaii State Office.

West Virginia State Office,
Federal Building, 75 High Street, Room 320, Morgantown, WV 26505–7500, (304) 284–4860, TDD (304) 284–4836. Dianne Crysler.

Wisconsin State Office,
4949 Kirschling Court, Stevens Point, WI 54481, (715) 345–7614, TDD (715) 345–7610, Mark Brodziski.

Wyoming State Office,
Federal Building, Room 1005, 100 East B Street, P.O. Box 11005, Casper, WY 82602–5006, (307) 261–6300, TDD (307) 261–6333, Alana Cannon.

Dated: January 25, 2008.

Russell T. Davis,

Administrator, Rural Housing Service.

United States Department of Agriculture
Rural Housing Service

Rural Community Development Initiative Grant Agreement

This grant agreement (Agreement), effective the date the Agency official signs the document, is a contract for receipt of grant funds under the Rural Community Development Initiative (RCDI).

*Between*_____ a private or public or tribal organization, (Grantee or Intermediary) and the United States of America acting through the Rural Housing Service, Department of Agriculture, (Agency or Grantor), for the benefit of recipients listed in Grantee's application for the grant.

Witnesseth:

The principal amount of the grant is $____ (Grant Funds). Matching funds, in an amount equal to the grant funds, will be provided by Grantee. The Grantee and Grantor will execute Form RD 1940–1, ''Request for Obligation of Funds.''

Whereas, Grantee will provide a program of financial and technical assistance to develop the capacity and ability of nonprofit organizations, low-income rural communities, or federally recognized tribes to undertake projects related to housing, community facilities, or community and economic development in rural areas;

According to the Paperwork Reduction Act of 1995, no persons are required to respond to a collection of information unless it displays a valid OMB control number. The valid OMB control number for this information collection is 0575–0180. The time required to complete this information collection is estimated to average 30 minutes per response, including the time for reviewing instructions, searching existing data sources, gathering and maintaining the data needed, and reviewing the collection of information.

Now, therefore, in consideration of the grant;

Grantee agrees that Grantee will:

A. Provide a program of financial and technical assistance in accordance with the proposal outlined in the application, (see Attachment A), the terms of which are incorporated with this Agreement and must be adhered to. Any changes to the approved program of financial and technical assistance must be approved in writing by the Grantor;

B. Use Grant Funds only for the purposes and activities specified in the application package approved by the Agency including the approved budget. Any uses not provided for in the approved budget must be approved in writing by the Agency in advance;

C. Charge expenses for travel and per diem that will not exceed the rates paid Agency employees for similar expenses. Grantees and recipients will be restricted to traveling coach class on common carrier airlines. Lodging rates may exceed the Government rate by a maximum of 20 percent. Meals and incidental expenses will be reimbursed at the same rate used by Agency employees, which is based upon location. Mileage and gas will be reimbursed at the existing Government rate. Rates can be obtained from the applicable State Office;

D. Charge meeting expenses in accordance with 31 U.S.C. 1345. Grant funds may not be used for travel, transportation, and subsistence expenses for a meeting. Matching funds may be used to pay these expenses. Any meeting or training not delineated in the application must be approved by the Agency to verify compliance with 31 U.S.C. 1345;

E. Request for advances or reimbursement for grant activities. If payment is to be made by advance, the Grantee shall request advance payment, but not more frequently than once every 30 days, of grant funds by using Standard Form 270, ''Request for Advance or Reimbursement.'' Receipts, invoices, hourly wage rate, personnel payroll records, or other documentation must be provided by intermediary upon request from the Agency. This information must be maintained in the intermediary's files.

If payment is to be made by reimbursement, the Grantee shall request reimbursement of grant funds, but not more frequently than once every 30 days, by using Standard Form 270, ''Request for Advance or Reimbursement.'' Receipts, invoices, hourly wage rate, personnel payroll records, or other documentation, as determined by the Agency, must be provided by the intermediary upon request to justify the amount. This information must be maintained in the intermediary's files.

All requests for advances or reimbursements must include matching fund usage. Matching funds must be at least equal to the grant amount requested.

F. Provide periodic reports as required by the Grantor. A financial status report and a project performance report will be required on a quarterly basis (due 30 working days after each calendar quarter). The financial status report must show how grant funds and matching funds have been used to date. A final report may serve as the last quarterly report. Grantees shall constantly monitor performance to ensure that time schedules are being met and projected goals by time periods are being accomplished. The project performance reports shall include, but are not limited to, the following:

1. Describe the activities that the funds reflected in the financial status report were used for;

2. A comparison of actual accomplishments to the objectives for that period;

3. Reasons why established objectives were not met, if applicable;

4. Problems, delays, or adverse conditions which will affect attainment of overall program objectives, prevent meeting time schedules or objectives, or preclude the attainment of particular objectives during established time periods. This disclosure shall be accomplished by a statement of the action taken or planned to resolve the situation;

5. Objectives and timetables established for the next reporting period;

6. A summary of the race, sex, and national origin of the recipients and a summary from the recipients of the race, sex, and national origin of the beneficiaries; and

7. The final report will also address the following:

a. What have been the most challenging or unexpected aspects of this program?

b. What advice would you give to other organizations planning a similar program? Please include strengths and limitations of the program. If you had the opportunity, what would you have done differently?

c. Are there any post-grant plans for this project? If yes, how will they be financed?

G. Consider potential recipients without discrimination as to race, color, religion, sex, national origin, age, marital status, sexual orientation, or physical or mental disability;

H. Ensure that any services or training offered by the recipient, as a result of the financial and technical assistance received, must be made available to all persons in the recipient's service area without discrimination as to race, color, religion, sex, national origin, age, marital status, sexual orientation, or physical or mental disability,

genetic information (not all protected bases apply to all programs) at reasonable rates, including assessments, taxes, or fees. Programs and activities must be delivered from accessible locations. The recipient must ensure that, where there are non-English speaking populations, materials are provided in the language that is spoken;

I. Ensure recipients are required to place nondiscrimination statements in advertisements, notices, pamphlets and brochures making the public aware of their services. The Grantee and recipient are required to provide widespread outreach and public notification in promoting any type of training or services that are available through grant funds;

J. The Grantee must collect and maintain data on recipients by race, sex, and national origin. The grantee must ensure that their recipients also collect and maintain data on beneficiaries by race, sex, and national origin as required by Title VI of the Civil Rights Act of 1964 and must be provided to the Agency for compliance review purposes. USDA Rural Development will complete a pre-award and a post award compliance review. The pre-award will be before grant approval or disbursement of funds. A post award review will be conducted 90 days after the project is in full operation and before all grant funds have been disbursed;

K. Upon any default under its representations or agreements contained in this instrument, Grantee, at the option and demand of Grantor, will immediately repay to Grantor any legally permitted damages together with any legally permitted interest from the date of the default. At Grantor's election, any default by the Grantee will constitute termination of the grant thereby causing cancellation of Federal assistance under the grant. The provisions of this Agreement may be enforced by Grantor, without regard to prior waivers of this Agreement, by proceedings in law or equity, in either Federal or State courts as may be deemed necessary by Grantor to ensure compliance with the provisions of this Agreement and the laws and regulations under which this grant is made;

L. Provide Financial Management Systems that will include:

1. Accurate, current, and complete disclosure of the financial results of each grant. Financial reporting will be on an accrual basis;

2. Records that identify adequately the source and application of funds for grant-supported activities. Those records shall contain information pertaining to grant awards and authorizations, obligations, unobligated balances, assets, liabilities, outlays, and income related to Grant Funds and matching funds;

3. Effective control over and accountability for all funds, property, and other assets. Grantees shall adequately safeguard all such assets and shall ensure that they are used solely for authorized purposes;

4. Accounting records supported by source documentation; and

5. Grantee tracking of fund usage and records that show matching funds and grant funds are used in equal proportions. The grantee will provide verifiable documentation regarding matching fund usage, i.e., bank statements or copies of funding obligations from the matching source.

M. Retain financial records, supporting documents, statistical records, and all other records pertinent to the grant for a period of at least three years after grant closing except that the records shall be retained beyond the 3-year period if audit findings have not been resolved. Microfilm or photocopies or similar methods may be substituted in lieu of original records. The Grantor and the Comptroller General of the United States, or any of their duly authorized representatives, shall have access to any books, documents, papers, and records of the Grantee's which are pertinent to the specific grant program for the purpose of making audits, examinations, excerpts, and transcripts;

N. Provide an A–133 audit report if $500,000 or more of Federal funds are expended in a 1-year period. If Federal funds expended during a 1-year period are less than $500,000 and there is an outstanding loan balance of $500,000 or more, an audit in accordance with generally accepted government auditing standards is required. If Federal funds expended during a 1-year period are less than $500,000 including any outstanding loan balance in which the Federal government imposes continuing compliance requirements, a management report may be submitted on Forms RD 442–2, ''Statement of Budget, Income and Equity,'' and 442–3, ''Balance Sheet'';

O. Not encumber, transfer, or dispose of the equipment or any part thereof, acquired wholly or in part with Grantor funds without the written consent of the Grantor; and

P. Not duplicate other program activities for which monies have been received, are committed, or are applied to from other sources (public or private).

Grantor agrees that:

A. It will make available to Grantee for the purpose of this Agreement funds in an amount not to exceed the Grant Funds. The funds will be disbursed to Grantee on a pro rata basis with the Grantee's matching funds; and

B. At its sole discretion and at any time may give any consent, deferment, subordination, release, satisfaction, or termination of any or all of Grantee's grant obligations, with or without valuable consideration, upon such terms and conditions as Grantor may determine to be:

1. Advisable to further the purpose of the grant or to protect Grantor's financial interest therein; and

2. Consistent with both the statutory purposes of the grant and the limitations of the statutory authority under which it is made.

Both Parties Agree:

A. Extensions of this grant agreement may be approved by the Agency, in writing, provided in the Agency's sole discretion the extension is justified and there is a likelihood that the grantee can accomplish the goals set out and approved in the application package during the extension period;

B. The Grantor must approve any changes in recipient or recipient composition;

C. The Grantor has agreed to give the Grantee the Grant Funds, subject to the terms and conditions established by the Grantor: *Provided, however,* That any Grant Funds actually disbursed and not needed for grant purposes be returned immediately to the Grantor. This agreement shall terminate 3 years from this date unless extended or unless terminated beforehand due to default on the part of the Grantee or for convenience of the Grantor and Grantee. The Grantor may terminate the grant in whole, or in part, at any time before the date of completion, whenever it is determined that the Grantee has failed to comply with the conditions of this Agreement or the applicable regulations; Termination for convenience will occur when both the Grantee and Grantor agree that the continuation of the program will not produce beneficial results commensurate with the further expenditure of funds.

D. As a condition of the Agreement, the Grantee certifies that it is in compliance with, and will comply in the course of the Agreement with, all applicable laws, regulations, Executive Orders, and other generally applicable requirements, which are incorporated into this agreement by reference, and such other statutory provisions as are specifically contained herein.

E. The Grantee will ensure that the recipients comply with title VI of the Civil Rights Act of 1964, section 504 of the Rehabilitation Act of 1973 and Executive Order 12250. Each recipient must sign Form RD 400–4, ''Assurance Agreement'';

F. The provisions of 7 CFR part 3015, ''Uniform Federal Assistance Regulations,'' part 3016, ''Uniform Administrative Requirements for Grants and Cooperative Agreements to State and Local Governments,'' or part 3019, ''Uniform Administrative Requirements for Grants and Agreements with Institutions of Higher Education, Hospitals, and Other Nonprofit Organizations,'' and the fiscal year 2008 ''Notice of Funds Availability (NOFA) Inviting Applications for the Rural Community Development Initiative (RCDI)'' are incorporated herein and made a part hereof by reference;

In witness whereof, Grantee has this day authorized and caused this Agreement to be executed by

_____

Attest

_____

By _____

(Grantee)

(Title) _____

Date _____

UNITED STATES OF AMERICA

RURAL HOUSING SERVICE

By _____

(Grantor) (Name) (Title)

Date _____

ATTACHMENT A

[Application proposal submitted by grantee.]

[FR Doc. E8–2025 Filed 2–1–08; 8:45 am]

BILLING CODE 3410–XV–P

DEPARTMENT OF AGRICULTURE

Rural Housing Service

Request for Proposals: The National Emergency or Disaster Grants To Assist Low-Income Migrant and Seasonal Farmworkers

Announcement Type: Initial Notice of Funds Available (NOFA) inviting proposals from qualified applicants.

Catalog of Federal Domestic Assistance Number (CFDA): 10.405

SUMMARY: The Rural Housing Service (RHS) announces the availability of funds and the timeframe to submit applications for grants to provide emergency services to areas where the Secretary of Agriculture determines that a local, state, or national emergency or disaster has caused low-income migrant or seasonal farmworkers to lose income, be unable to work, or to stay at home or return home in anticipation of work shortages. For purposes of this NOFA, emergency services include any service that can be provided under the Robert T. Stafford Disaster Relief and Emergency Assistance Act (Pub. L. 93–288), as amended (Stafford Act), that also meets the requirements of 42 U.S.C. 5177a. For instance the Stafford Act and 41 U.S.C. 5177a would permit the following services:

- Activities to support state and local emergency assistance;
- Coordination of disaster relief provided by federal and non-federal organizations;
- Technical and advisory assistance to state and local governments;
- Emergency assistance through federal agencies;
- Debris removal through grants to state and local governments;
- Grants to individuals and households for temporary housing and uninsured personal needs; and
- Distribution of medicine, food and consumables.

Additionally, for this NOFA, the types of services could include, but are not limited to, assistance in meeting rent or mortgage payments, utility bills, child care, transportation, school supplies, food, repair or rehabilitation of farmworker housing, facilities related to farmworker housing such as an infirmary for emergency care of a child care facility, and the rehabilitation of existing farmworker housing units.

Please go to *http://www.rurdev.usda.gov/rd/disasters* to determine if your area has been identified by the Secretary of Agriculture as a national emergency or disaster area or contact your local Rural Development office.

DATES: The deadline for receipt of all applications in response to this NOFA is 5 p.m., Eastern Time, on April 4, 2008. The application closing deadline is firm as to date and hour. The Agency will not consider any application that is received after the closing deadline. Applicants intending to mail applications must provide sufficient time to permit delivery on or before the closing deadline. Acceptance by a post office or private mailer does not constitute delivery. Facsimile (FAX), and postage due applications will not be accepted.

ADDRESSES: Applications should be submitted to USDA Rural Housing Service; Attention: Henry Searcy, Jr., Senior Loan Specialist, Multi-Family Housing Processing Division STOP 0781 (Room 1263–S), or Bonnie Edwards-Jackson, Senior Loan Specialist, Multi-Family Housing Processing Division, STOP 0781 (Room 1239–S), U.S. Department of Agriculture, Rural Housing Service, 1400 Independence Ave., SW., Washington, DC 20250–0781.

FOR FURTHER INFORMATION CONTACT: Henry Searcy by telephone at (202) 720–1753 or Bonnie Edwards-Jackson at (202) 690–0759 or via e-mail at *Henry.Searcy@wdc.usda.gov* or *Bonnie.Edwards@wdc.usda.gov.* (Please note the phone numbers are not toll-free numbers.)

SUPPLEMENTARY INFORMATION:

Paperwork Reduction Act

The reporting requirements contained in this notice have been approved by the Office of Management and Budget under Control Number 0575–0045.

Overview

Public Law 110–28 appropriated $16,000,000 to provide emergency grants to assist low-income migrant and seasonal farmworkers to carryout section 2281 of the Food, Agriculture, Conservation and Trade Act of 1990 (42 U.S.C. 5177a). Section 2281 of the above act allows the Secretary of Agriculture to provide emergency grants to assist low-income migrant and seasonal farmworkers.

Program Administration

I. Funding Opportunities Description

This NOFA requests applications for the purpose of providing emergency services to low-income migrant and seasonal farmworkers. Eligibility for grants for emergency services is limited to public agencies or private organizations with tax exempt status under section 501(c)(3) of Title 26 United States Code that have experience in providing emergency services to low-income migrant and seasonal farmworkers. These funds are to be administered in areas where the Secretary of Agriculture determines that a local, state, or national emergency or disaster has occurred.

This NOFA will fund service providers to administer all services permitted under the Stafford Act and 42 U.S.C. 5177a. These services could include, but are not limited to, providing assistance in meeting rent or mortgage payments, paying utility bills, child care, transportation, school supplies or food; repair or rehabilitation of farmworker housing or facilities related to farmworker housing such as an infirmary for emergency care or a child care facility.

The term ''low-income migrant or seasonal farmworker'' means an individual (1) who has, during any consecutive 12 month period within the preceding 24 month period, performed farm work for wages, (2) who has received not less than one-half of such individual's total income, or been employed at least one-half of total work time in farm work, (3) whose annual family income within the 12 month period referred to in paragraph (1) does not exceed the higher of the poverty level or 70 percent of the lower living standard income level, (4) is a person lawfully admitted for permanent residence.

The ''lower living standard income level'' referred to in paragraph (3) is defined under section 101(24) of the Workforce Investment Act (Pub. L. 105–220). This act is administered by the Department of Labor. Tables designating the ''lower living standard income level'' are published in the **Federal Register** by Health and Human Services. The most recent publication can be found in the **Federal Register** on June 24, 2007 at 72 FR 15.

II. Award Information

The U.S. Troop Readiness, Veterans' Care, Katrina Recovery and Iraq Accountability Appropriations Act 2007 Public Law 110–28, made available $16,000,000 to provide emergency services to low-income migrant and seasonal farmworkers where the Secretary of Agriculture determines that a local, state, or national emergency or disaster has caused low-income migrant or seasonal farmworkers to lose income, be unable to work, or to stay at home or return home in anticipation of work shortages.

III. Eligibility Information

The applicant must:

(1) Be eligible to receive a grant for the above assistance the applicant must

be a broad-based nonprofit organization (which may include faith-based organizations), a nonprofit organization of farmworkers, a community organization, a federally recognized Indian tribe, or an agency or political subdivision of a State or local government, or a public agency (such as a housing authority).

(2) Be unable to provide the necessary services from its own resources.

(3) Possess the legal and actual capacity, ability, and experience to incur and carry out the undertakings and obligations incurred.

(4) Legally obligate itself not to divert income to any other business, enterprise, or purpose.

(5) Have experience in providing emergency services to low-income migrant and seasonal farmworkers.

(6) Be either a public agency or private organization with tax exempt status under section 501(c)(3) of Title 26 United States Code.

(7) Not be debarred or suspended.

IV. Equal Opportunity and Nondiscrimination Requirements

(1) In accordance with the Fair Housing Act, Title VI of the Civil Rights Act of 1964, the Equal Credit Opportunity Act, the Age Discrimination Act of 1975, Executive Order 12898, the Americans with Disabilities Act, and section 504 of the Rehabilitation Act of 1973, neither the Grantor nor the Agency will discriminate against any employee, proposed intermediary or proposed ultimate recipient on the basis of sex, marital status, race, color, religion, national origin, age, sexual orientation, physical or mental disability (provided the proposed intermediary or proposed ultimate recipient has the capacity to contract), because all or part of the proposed intermediary's or proposed ultimate recipient's income is derived from public assistance of any kind, or because the proposed intermediary or proposed ultimate recipient has in good faith exercised any right under the Consumer Credit Protection Act, with respect to any aspect of a credit transaction anytime Agency loan funds are involved.

(2) The policies and regulations contained in 7 CFR part 1901, subpart E apply to this program.

(3) The Rural Housing Service Administrator will assure that equal opportunity and nondiscrimination requirements are met in accordance with the Fair Housing Act, Title VI of the Civil Rights Act of 1964, the Equal Credit Opportunity Act, the Age Discrimination Act of 1975, Executive Order 12898, the Americans with Disabilities Act, and section 504 of the Rehabilitation Act of 1973.

(4) All housing must meet the accessibility requirements found at 7 CFR 3560.60(d).

V. Application and Submission Information

The application process will be the submission of an application. In the event that a proposal is selected for further processing and the applicant declines, the next highest ranked unfunded application may be selected. At the time of final grant approval, the Agency and grant recipients shall enter into an Agency approved grant agreement.

Application Requirements

The application must contain the following:

Experience of applicant providing emergency services. Greater than 10 years experience providing emergency services (15 points). Between 6 years and 10 years experience providing emergency services (10 points). Less than 5 years (1) A summary page listing the following items. This information should be double-spaced between items and not be in narrative form.

(a) Applicant's name.

(b) Applicant's Taxpayer Identification Number.

(c) Applicant's address.

(d) Applicant's telephone number.

(e) Name of applicant's contact person, telephone number, and address.

(f) Amount of grant requested.

(g) The applicant's Dun and Bradstreet Data Universal Numbering System (DUNS) number. As required by the Office of Management and Budget (OMB), all non-individual grant applicants must provide a DUNS number when applying for Federal grants, on or after October 1, 2003. Organizations can receive a DUNS number at no cost by calling the dedicated toll-free DUNS Number request line at 1–866–705–5711. Additional information concerning this requirement is provided in a policy directive issued by OMB and published in the **Federal Register** on June 27, 2003 (68 FR 38402–38405).

(2) A narrative describing the applicant's ability to meet the eligibility requirements stated in this NOFA.

(3) A detailed Statement of Work.

(4) A current, dated, financial statement signed by a certified public accountant showing the applicant's assets and liabilities with information on the repayment schedule and status of all debts.

(5) An organizational plan that includes a staffing chart complete with employee names, job titles, salaries, hours, timelines, and duties to achieve the objective of the grant program.

(6) A detailed budget plan projecting the applicant's monthly and annual income and expenses the grantee will incur. Costs will be limited to those that are allowed under 7 CFR part 3015, and 7 CFR part 3016 or 3019 as applicable.

(7) A narrative describing the applicant's knowledge, demonstrated ability and practical experience in delivering direct emergency assistance to low-income migrant and seasonal farmworkers. In addition, to ensure the funds are equitably distributed, and that there is no duplication of efforts, applicants must clearly identify the geographic area that they intend to serve and provide documentation that they have the experience and ability to service those areas.

VI. Application Review Information

All applications will be evaluated by a grant committee. The grant committee will make recommendations to the Agency Administrator concerning eligibility determinations and the selection of applications based on the selection criteria contained in this NOFA and the availability of funds. The Administrator will inform applicants of the status of their application within 30 days of the closing date of the NOFA.

Applications for grants to provide emergency services to low-income migrant and seasonal farmworkers will be evaluated by the types of assistance to be provided. Because the types of assistance may differ depending on the geographic area the committee will recommend to the Administrator three Technical Assistance (TA) providers. Each TA provider would be responsible for a region (western, central and eastern region).

Selection Criteria

Applications to provide emergency services to low-income migrant and seasonal farmworkers will be scored on the following basis:

(1) The number of low-income migrant and seasonal farmworkers to be assisted by the proposal. Greater than 100 farmworkers—not counting non-farmworker family members (25 points). Between 50 and 100 farmworkers—not counting non-farmworker family members (15 points). Less than 50 farmworkers but more than 25—not counting non-farmworker family members (5 points).

(2) Economic and social benefits to low-income migrant and seasonal farmworkers and their families from the services to be provided. Providing rental and mortgage assistance (10 points).

Providing other authorized services (10 points).

VII. Appeal Process

All adverse determinations regarding applicant eligibility and the awarding of points as part of the selection process are appealable. Instructions on the appeal process will be provided at the time an applicant is notified of the adverse action.

USDA is an equal opportunity provider, employer and lender. To file a complaint of discrimination write USDA, Director, Office of Civil Rights, 1400 Independence Avenue, SW., Washington, DC 20250–9410 or call (800) 795–3272 (voice) or (202) 720–6382 (TDD).

Dated: January 24, 2008.

Russell T. Davis,

Administrator, Rural Housing Service.

[FR Doc. E8–1951 Filed 2–1–08; 8:45 am]

BILLING CODE 3410–XV–P

DEPARTMENT OF AGRICULTURE

Rural Housing Service

Notice for Request for Proposals for Guaranteed Loans Under the Section 538 Guaranteed Rural Rental Housing Program (GRRHP) for Fiscal Year 2008

AGENCY: Rural Housing Service, USDA.

ACTION: Notice.

SUMMARY: This is a request for proposals for guaranteed loans under the section 538 Guaranteed Rural Rental Housing Program (GRRHP) pursuant to 7 CFR 3565.4 for Fiscal Year (FY) 2008 subject to the availability of funding. FY 2008 funding for the section 538 program is $129,090,000. Applicants will submit proposals in the form of ''RESPONSES.'' The commitment of program dollars will be made to applicants of selected responses that have fulfilled the necessary requirements for obligation. Expenses incurred in developing applications will be at the applicant's risk. The following paragraphs outline the timeframes, eligibility requirements, lender responsibilities, and the overall response and application processes.

The GRRHP operates under 7 CFR part 3565. The GRRHP Origination and Servicing Handbook (HB–1–3565) is available to provide lenders and the general public with guidance on program administration. HB–1–3565, which contains a copy of 7 CFR part 3565 in Appendix 1, can be found at the Agency's Instructions Web site address *http://www.rurdev.usda.gov/regs/hblist.html#hbw6*.

Eligible lenders are invited to submit responses for the new construction of affordable rural rental housing, the acquisition with rehabilitation of affordable rural rental housing, the revitalization, repair, and transfer (as stipulated in 7 CFR 3560.406) of existing direct section 515 housing (transfer costs are subject to Agency approval and must be an eligible use of loan proceeds as listed in 7 CFR 3565.205), and properties involved in the Agency's multi-family preservation and revitalization program (MPR). Equity payments, as stipulated in 7 CFR 3560.406, in connection with the transfer of existing direct section 515 housing, are an eligible use of loan proceeds. In order to be considered, direct section 515 housing and MPR projects must need repairs and undergo revitalization of a minimum of $6,500 per unit.

The Agency will review responses submitted by eligible lenders, on the lender's letterhead, and signed by both the prospective borrower and lender. Although a complete application is not required in response to this Notice of request for proposals, eligible lenders may submit a complete application concurrently with the response. However, submitting a complete application will not have an effect on the respondent's score.

DATES: As long as funds remain available, eligible responses to this notice will be accepted and eligible requests will be obligated per this guidance until September 26, 2008, 12 P.M. Eastern Time. Complete applications that are received by the Agency prior to April 25, 2008 will be given priority ranking and scoring. A notice will be placed in the **Federal Register** if all FY 2008 funds are committed prior to September 26, 2008. Selected responses that develop into complete applications and meet all Federal environmental requirements will receive commitments to the extent an appropriation act provides funding for GRRHP for FY 2008 until all funds are expended.

The Agency will select the responses that meet eligibility criteria and invite lenders to submit complete applications to the Agency. Those responses that are selected that subsequently submit complete applications that meet all program requirements and are received prior to or on April 25, 2008, but score less than 25 points, or score 25 points or more, but have a development cost ratio equal to or greater than 70 percent, may be selected for obligation after April 25, 2008, with the highest scoring responses receiving priority subject to availability of funds. After April 25, 2008, responses that develop into complete applications that meet all program requirements will be selected for further processing regardless of score, subject to the availability of funding.

The USDA Rural Development will prioritize the obligation requests received after April 25, 2008, using the highest score and the procedures outlined as follows. Once a complete application is received and approved by the State Office, an obligation request for 2008 funds will be submitted [via fax] by the State Office to the National Office. Obligation requests submitted to the National Office will be accumulated, but not obligated, throughout the week until the weekly obligation request submission deadline of midnight Eastern Time every Thursday. To the extent that funds remain available, the National Office will obligate the requests accumulated through the weekly request submission deadline of the previous week by the following Tuesday (i.e., requests received from Friday, May 16, 2008, to Thursday, May 22, 2008, will be obligated by Tuesday, May 27, 2008). However, requests received prior to April 25, 2008, that are not eligible for obligation until after April 25, 2008, will be obligated no earlier than Tuesday, April 29, 2008. Funds will be allocated in scoring order, with the highest scoring requests being obligated first, until all funds are exhausted. In the event of a tie, priority will be given to the request for the project that: 1st—has the highest percentage of leveraging (lowest Loan to Cost); 2nd—is in the smaller rural community. Eligible responses to this Notice received before the September 26, 2008, deadline, or before FY 2008 funds are exhausted (whichever occurs first) will be processed to the point of a complete application, and if approved, will be scored in the 2009 funding cycle provided there are no significant program changes.

Eligible lenders mailing a response or application must provide sufficient time to permit delivery to the *Submission Address* on or before the closing deadline date and time. Acceptance by a U.S. Post Office or private mailer does not constitute delivery. Postage due responses and applications will not be accepted.

Submission Address: Eligible lenders will send responses to the contact person in the State Office where the project will be located. The lender will also send a copy of its response (copies of ''Lender Certification'' letter and ''Project Specific Data'' sheets only; do not include any application supporting

documentation, i.e., market studies, plans/specs, etc.) to: C.B. Alonso, Senior Loan Specialist, USDA Rural Development Guaranteed Rural Rental Housing Program, Multi-Family Housing Processing Division, U.S. Department of Agriculture, South Agriculture Building, Room 1271, STOP 0781, 1400 Independence Avenue, SW., Washington, DC 20250–0781.

USDA Rural Development State Offices, their addresses, telephone numbers, and person to contact follows: [this information may also be found at *http://www.rurdev.usda.gov/recd_map.html*]

Note: Telephone numbers listed are not toll-free.

Alabama State Office
Suite 601, Sterling Centre, 4121 Carmichael Road, Montgomery, AL 36106–3683, (334) 279–3455, TDD (334) 279–3495, Vann L. McCloud

Alaska State Office
800 West Evergreen, Suite 201, Palmer, AK 99645, (907) 761–7740, TDD (907) 761–8905, Deborah Davis

Arizona State Office
Phoenix Courthouse and Federal Building, 230 North First Ave., Suite 206, Phoenix, AZ 85003–1706, (602) 280–8768, TDD (602) 280–8706, Carol Torres

Arkansas State Office
700 W. Capitol Ave., Room 3416, Little Rock, AR 72201–3225, (501) 301–3250, TDD (501) 301–3279, Gregory Kemper

California State Office
430 G Street, #4169, Davis, CA 95616–4169, (530) 792–5830, TDD (530) 792–5848, Stephen Nnodim

Colorado State Office
655 Parfet Street, Room E100, Lakewood, CO 80215, (720) 544–2923, TDD (800) 659–2656, Mary Summerfield

Connecticut
Served by Massachusetts State Office

Delaware and Maryland State Office
1221 College Park Drive, Suite 200, Dover, DE 19904, (302) 857–3600, TDD (302) 857–3585, Patricia M. Baker

Florida & Virgin Islands State Office
4440 N.W. 25th Place, Gainesville, FL 32606–6563, (352) 338–3465, TDD (352) 338–3499, Elizabeth M. Whitaker

Georgia State Office
Stephens Federal Building, 355 E. Hancock Avenue, Athens, GA 30601–2768, (706) 546–2164, TDD (706) 546–2034, Wayne Rogers

Hawaii State Office
(Services all Hawaii, American Samoa Guam, and Western Pacific), Room 311, Federal Building, 154 Waianuenue Avenue, Hilo, HI 96720, (808) 933–8305, TDD (808) 541–2600, Don Étés

Idaho State Office
Suite A1, 9173 West Barnes Dr., Boise, ID 83709, (208) 378–5630, TDD (208) 378–5644, Roni Atkins

Illinois State Office
2118 West Park Court, Suite A, Champaign, IL 61821–2986, (217) 403–6222, TDD (217) 403–6240, Barry L. Ramsey

Indiana State Office
5975 Lakeside Boulevard, Indianapolis, IN 46278, (317) 290–3100 (ext. 423), TDD (317) 290–3343, Stephen Dye

Iowa State Office
210 Walnut Street, Room 873, Des Moines, IA 50309, (515) 284–4666, TDD (515) 284–4858, Julie Sleeper

Kansas State Office
1303 SW First American Place, Suite 100, Topeka, KS 66604–4040, (785) 271–2718, TDD (785) 271–2767, Tim Rogers

Kentucky State Office
771 Corporate Drive, Suite 200, Lexington, KY 40503, (859) 224–7325, TDD (859) 224–7422, Paul Higgins

Louisiana State Office
3727 Government Street, Alexandria, LA 71302, (318) 473–7962, TDD (318) 473–7655, Yvonne R. Emerson

Maine State Office
967 Illinois Ave., Suite 4, P.O. Box 405, Bangor, ME 04402–0405, (207) 990–9110, TDD (207) 942–7331, Dale D. Holmes

Maryland
Served by Delaware State Office

Massachusetts, Connecticut, & Rhode Island State Office
451 West Street, Amherst, MA 01002, (413) 253–4333, TDD (413) 253–4590, Donald Colburn or Paul Geoffroy

Michigan State Office
3001 Coolidge Road, Suite 200, East Lansing, MI 48823, (517) 324–5192, TDD (517) 337–6795, Ghulam R. Sumbal

Minnesota State Office
375 Jackson Street Building, Suite 410, St. Paul, MN 55101–1853, (651) 602–7804, TDD (651) 602–7830, Tom Osborne

Mississippi State Office
Federal Building, Suite 831, 100 W. Capitol Street, Jackson, MS 39269, (601) 965–4326, TDD (601) 965–5850, Darnella Smith-Murray

Missouri State Office
601 Business Loop 70 West, Parkade Center, Suite 235, Columbia, MO 65203, (573) 876–0990, TDD (573) 876–9480, Anita J. Dunning

Montana State Office
900 Technology Blvd. Suite B, Bozeman, MT 59715, (406) 585–2565, TDD (406) 585–2562, Deborah Chorlton

Nebraska State Office
Federal Building, Room 152, 100 Centennial Mall N, Lincoln, NE 68508, (402) 437–5594, TDD (402) 437–5093, Byron L. Fischer

Nevada State Office
1390 South Curry Street, Carson City, NV 89703–9910, (775) 887–1222 (ext. 25), TDD (775) 885–0633, William Brewer

New Hampshire State Office
Concord Center, Suite 218, Box 317, 10 Ferry Street, Concord, NH 03301–5004, (603) 223–6046, TDD (603) 229–0536, Robert McCarthy

New Jersey State Office
5th Floor North Suite 500, 8000 Midlantic Dr., Mt. Laurel, NJ 08054, (856) 787–7740, TDD (856) 787–7730, George Hyatt, Jr.

New Mexico State Office
6200 Jefferson St., NE, Room 255, Albuquerque, NM 87109, (505) 761–4944, TDD (505) 761–4938, Art Garcia

New York State Office
The Galleries of Syracuse, 441 S. Salina Street, Suite 357 5th Floor, Syracuse, NY 13202, (315) 477–6419, TDD (315) 477–6447, George N. Von Pless

North Carolina State Office
4405 Bland Road, Suite 260, Raleigh, NC 27609, (919) 873–2063, TDD (919) 873–2003, William Hobbs

North Dakota State Office
Federal Building, Room 208, 220 East Rosser, PO Box 1737, Bismarck, ND 58502, (701) 530–2049, TDD (701) 530–2113, Donald L. Warren

Ohio State Office
Federal Building, Room 507, 200 North High Street, Columbus, OH 43215–2477, (614) 255–2418, TDD (614) 255–2554, Melodie Taylor-Ward

Oklahoma State Office
100 USDA, Suite 108, Stillwater, OK 74074–2654, (405) 742–1070, TDD (405) 742–1007, Tommy Earls

Oregon State Office
101 SW Main, Suite 1410, Portland, OR 97204–3222, (503) 414–3353, TDD (503) 414–3387, Rod Hansen

Pennsylvania State Office
One Credit Union Place, Suite 330, Harrisburg, PA 17110–2996, (717) 237–2281, TDD (717) 237–2261, Frank Wetherhold

Puerto Rico State Office
654 Munoz Rivera Avenue, IBM Plaza, Suite 601, Hato Rey, PR 00918, (787) 766–5095 (ext. 249), TDD (787) 766–5332, Pedro Gomez or Lourdes Colon

Rhode Island
Served by Massachusetts State Office,

South Carolina State Office
Strom Thurmond Federal Building, 1835 Assembly Street, Room 1007, Columbia, SC 29201, (803) 253–3432, TDD (803) 765–5697, Larry D. Floyd

South Dakota State Office
Federal Building, Room 210, 200 Fourth Street, SW, Huron, SD 57350, (605) 352–1132, TDD (605) 352–1147, Roger Hazuka or Pam Reilly

Tennessee State Office
Suite 300, 3322 West End Avenue, Nashville, TN 37203–1084, (615) 783–1375, TDD (615) 783–1397, Don Harris

Texas State Office
Federal Building, Suite 102, 101 South Main, Temple, TX 76501, (254) 742–9758, TDD (254) 742–9712, Leon Carey or Michael Canales

Utah State Office
Wallace F. Bennett Federal Building, 125 S. State Street, Room 4311, Salt Lake City, UT 84147–0350, (801) 524–4325, TDD (801) 524–3309, David E. Brown

Vermont State Office
City Center, 3rd Floor, 89 Main Street, Montpelier, VT 05602, (802) 828–6026, TDD (802) 223–6365, Heidi Setien

Virgin Islands
Served by Florida State Office

Virginia State Office
Culpeper Building, Suite 238, 1606 Santa Rosa Road, Richmond, VA 23229, (804) 287–1596, TDD (804) 287–1753, CJ Michels

Washington State Office

1835 Black Lake Blvd., Suite B, Olympia, WA 98512, (360) 704–7730, TDD (360) 704–7760, Robert Lund

Western Pacific Territories
Served by Hawaii State Office

West Virginia State Office
Federal Building, 75 High Street, Room 320, Morgantown, WV 26505–7500, (304) 284–4872, TDD (304) 284–4836, Dianne Crysler

Wisconsin State Office
4949 Kirschling Court, Stevens Point, WI 54481, (715) 345–7615 (ext. 151), TDD (715) 345–7614, Peter Kohnen

Wyoming State Office
PO Box 11005, Casper, WY 82602, (307) 233–6715, TDD (307) 233–6733, Alan Brooks

FOR FURTHER INFORMATION CONTACT: C.B. Alonso, Senior Loan Specialist, USDA Rural Development Guaranteed Rural Rental Housing Program, Multi-Family Housing Processing Division, U.S. Department of Agriculture, South Agriculture Building, Room 1271, STOP 0781, 1400 Independence Avenue, SW., Washington, DC 20250–0781. E-mail: *cb.alonso@wdc.usda.gov.* Telephone: (202) 720–1624. This number is not toll-free. Hearing or speech-impaired persons may access that number by calling the Federal Information Relay Service toll-free at (800) 877–8339.

Eligiblity of Prior Year Selected Notice of Funding Availability Responses: FY 2007 NOFA response selections that did not develop into complete applications within the time constraints stipulated by the corresponding State Office have been cancelled. A new response for the project may be submitted subject to the conditions of this Notice.

FY 2007 NOFA responses that were selected by the Agency, and a complete application (including all Federal environmental documents required by 7 CFR part 1940, subpart G, a Form RD 3565–1, and the $2,500 application fee) was submitted by the lender within 90 days from the date of notification of response selection (unless an extension was granted by the State office), will be eligible for FY 2008 program dollars and will compete for available FY 2008 funds without having to complete a FY 2008 response.

General Program Information

Program Purpose: The purpose of the GRRHP is to increase the supply of affordable rural rental housing, through the use of loan guarantees that encourage partnerships between the Agency, private lenders, and public agencies.

Responses Must be Submitted by: The Agency will only accept responses from GRRHP eligible or approved lenders as described in 7 CFR 3565.102 and 3565.103 respectively.

Qualifying Properties: Qualifying properties include new construction for multi-family housing units, the acquisition of existing structures with a minimum per unit rehabilitation expenditure requirement in accordance with 7 CFR 3565.252, the revitalization, repair and transfer (as stipulated in 7 CFR 3560.406) of existing direct section 515 housing (transfer costs are subject to Agency approval and must be an eligible use of loan proceeds as listed in 7 CFR 3565.205) and properties involved in the Agency's MPR program. Equity payment, as stipulated 7 CFR 3560.406, in the transfer of existing direct section 515 housing, is an eligible use of loan proceeds. In order to be considered, direct section 515 housing projects and MPR properties must need repairs and undergo revitalization of a minimum of $6,500 per unit.

Eligible Financing Sources: Any form of Federal, state, and conventional sources of financing can be used in conjunction with the loan guarantee, including Home Investment Partnership Program (HOME) grant funds, tax exempt bonds, and low income housing tax credits.

Maximum Guarantee: The Agency can guarantee the ''permanent'' loan. The Agency can only guarantee construction advances for the construction of the property if a guarantee for the permanent loan is requested for the same property. The Agency cannot, however, guarantee only the ''construction'' advances for the construction of a property.

The maximum guarantee for a permanent loan will be 90 percent of the unpaid principal and interest up to default and accrued interest 90 calendar days from the date the liquidation plan is approved by the Agency, as defined in 7 CFR 3565.452. Penalties incurred as a result of default are not covered by the guarantee. The Agency may provide a lesser guarantee based upon its evaluation of the credit quality of the loan. The Agency liability under any guarantee will decrease or increase, in proportion to any decrease or increase in the amount of the unpaid portion of the loan, up to the maximum amount specified in the Loan Note Guarantee.

The maximum guarantee of construction advances will not at any time exceed the lesser of 90 percent of the amount of principal and interest up to default advanced for eligible uses of loan proceeds or 90 percent of the original principal amount and interest up to default of the loan. Penalties incurred as a result of default are not covered by the guarantee. The Agency may provide a lesser guarantee based upon its evaluation of the credit quality of the loan.

Reimbursement of Losses: Any losses will be split on a pro-rata basis between the lender and the Agency from the first dollar lost.

Interest Rate: The Agency will accept the best rate negotiated between the lender and prospective borrower. The lender is not required to provide the interest rate in the response. When applying for interest credit, the lender must provide the basis points over the Long Term Monthly Applicable Federal Rate that it will use to calculate the loan note's interest rate. The interest rate must be fixed over the term of the loan. In case the Agency also guarantees construction advances, the interest rate must be fixed (i.e., the same during construction as it is for permanent financing) for the entire term of the loan.

Interest Credit: For at least 20 percent of the loans made during each fiscal year, the Agency will provide assistance in the form of interest credit, to the extent necessary to reduce the agreed-upon rate of interest to the Long Term Monthly AFR as such term is used in section 42(I)(2)(D) of the Internal Revenue Code of 1986, 26 U.S.C. 7805, Section 1.42–1T. The interest credit will be paid in accordance with HB–1–3565 4.10 D. If 20 percent of the loans have not received interest credit by April 25, 2008, then the Agency will award interest credit to those loans that initially requested interest credit and have the highest interest credit priority score until at least 20 percent of the loans have received interest credit. Requests for interest credit must be made in the response.

Lenders are not permitted to make requests for interest credit after the selection process has taken place. When interest credit assistance is requested, lenders must state in the response the maximum basis points above the Long Term Monthly AFR that will be used to calculate the interest rate. Priority points will be awarded to only those responses submitting proposed interest rates equal to or less than 250 basis points above the Long Term Monthly AFR. Any response submitted that exceeds 250 basis points above the Long Term Monthly AFR will receive a deduction of 20 points from its Priority Score (refer to ''Scoring the Priority Criteria for Selection of Projects'' section of this Notice). A total of 30 points will be deducted from the Priority Score of any response submitted that is 300 basis points or more above the Long Term Monthly AFR.

Due to limited funding, and in order to distribute interest credit assistance as

broadly as possible and minimize program costs, the Agency will limit the interest credit to $1.5 million per loan. For example, if an eligible request were made for interest credit on a loan of $2.5 million, up to $1.5 million of the loan would receive interest credit. Interest credit is only available for the permanent loan (not construction loans). Lenders with projects that are viable with or without interest credit are encouraged to submit a response reflecting financial and market feasibility under both funding options. Responses requesting consideration under both options will not affect interest credit selection. Due to limited interest credit funds and the responsibility of USDA Rural Development to target and give priority to rural areas most in need, responses requesting interest credit must score a minimum of 55 points under the criteria established in this Notice.

Surcharges for Guarantee of Construction Advances: There is no surcharge for the guarantee of construction advances for FY 2008.

Program Fees for FY 2008: As a condition of receiving a loan guarantee, the Agency will charge the following guarantee fees to the lender.

(1) Initial guarantee fee. The Agency will charge an initial guarantee fee equal to one percent of the guaranteed loan amount. For purposes of calculating this fee, the guaranteed loan amount is the product of the percentage of the guarantee times the initial principal amount of the guaranteed loan.

(2) Annual guarantee fee. An annual guarantee fee of at least 50 basis points (one-half percent) of the outstanding principal amount of the loan as of December 31 will be charged each year or portion of a year that the guarantee is in effect.

(3) There is a non-refundable application fee of $2,500 when the application is submitted.

(4) There is a flat fee of $500 when a lender requests USDA Rural Development to extend the term of a guarantee commitment.

(5) There is a flat fee of $500 when a lender requests USDA Rural Development to reopen an application when a commitment has expired.

(6) There is a flat fee of $1,250 when a lender requests USDA Rural Development to approve the transfer of property and assumption of the loan to an eligible prospective borrower.

(7) There is no lender application fee for lender approval in FY 2008.

Eligible Lenders: An eligible lender for the section 538 GRRHP as required by 7 CFR 3565.102 must be a licensed business entity or Housing Finance Agency (HFA) in good standing in the state or states where it conducts business. Lender eligibility requirements are contained in 7 CFR 3565.102. Please review 7 CFR 3565.102 for a complete list of all of the criteria. Below is a list of some of the eligible lender criteria under 7 CFR 3565.102:

(1) Licensed business entity that meets the qualifications and has the approval of the Secretary of Housing and Urban Development (HUD) to make multi-family housing loans that are insured under the National Housing Act. A complete list of HUD approved lenders can be found on the HUD Web site at *http://www.hud.gov.*

(2) A licensed business entity that meets the qualifications and has the approval of the Ginnie Mae or Freddie Mac or Fannie Mae corporations to make multi-family housing loans that are sold to the same corporations. A complete list of Freddie Mac approved lenders can be found in Freddie Mac's Web site at *http://www.freddiemac.com.* Fannie Mae approved lenders are found at *http://www.fanniemae.com.* For a list of Ginnie Mae issuers, contact Ginnie Mae at *http://www.ginniemae.gov.*

(3) A State or local HFA with a top-tier rating from Moody's or Standard & Poors, or member of the Federal Home Loan Bank system, and the demonstrated ability to underwrite, originate, process, close, service, manage, and dispose of multi-family housing loans in a prudent manner.

(4) Be a GRRHP approved lender, defined as an entity with a current executed multi-family housing Lender's Agreement with USDA Rural Development.

(5) Lenders that can demonstrate the capacity to underwrite, originate, process, close, service, manage, and dispose of multi-family housing loans in a prudent manner. In order to be approved the lender will have to have an acceptable level of financial soundness as determined by a lender rating service. The submission of materials demonstrating capacity will be required if the lender's response is selected. Lenders who are otherwise ineligible may become eligible if they maintain a correspondent relationship with an eligible lender that does have the capacity to underwrite, originate, process, close, service, manage, and dispose of multi-family housing loans in a prudent manner. In this case, the eligible lender must submit the response and application on company letterhead. All contractual and legal documentation will be signed between USDA Rural Development and the lender that submitted the response and application.

GRRHP Lender Approval Application: Lenders whose responses are selected will be notified by the USDA Rural Development to submit a request for GRRHP lender approval application within 30 days of notification. Lenders who request GRRHP approval must meet the standards in the 7 CFR 3565.102 and 103. Lenders that have received GRRHP lender approval in the past and are in good standing do not need to reapply for GRRHP lender approval.

Submission of Documentation for GRRHP Lender Approval: All lenders that have not yet received GRRHP lender approval must submit a complete lender application to: Director, Multi-Family Housing Processing Division, Rural Housing Service, U.S. Department of Agriculture, Room 1263, STOP 0781, 1400 Independence Avenue, SW., Washington, DC 20250–0781. Lender applications must be identified as ''Section 538 Guaranteed Rural Rental Housing Program'' on the envelope.

As the Section 538 program does not have a formal application form, a complete application consists of a cover letter requesting GRRHP lender approval and the following documentation:

(1) Request for GRRHP lender approval on the lender's letterhead;

(2) Lenders who are HUD, Ginnie Mae, Freddie Mac or Fannie Mae multi-family approved lenders are required to show evidence of this status, such as a copy of a letter designating the distinction;

(3) The lender's Loan Origination, Loan Servicing, and Portfolio Management Handbooks. These handbooks should detail the lender's policies and procedures on loan origination through termination for multi-family loans;

(4) Portfolio performance data;

(5) Copies of standard documents that will be used in processing GRRHP loans;

(6) Resumes and qualifications of key personnel that will be involved in the GRRHP;

(7) Identification of standards and processes that deviate from those outlined in the GRRHP Origination and Servicing Handbook (HB–1–3565) found at *http://www.rurdev.usda.gov/regs/hblist.html#hbw6.*

(8) A copy of the most recent audited financial statements;

(9) Lender specific information including: (a) Legal name and address, (b) list of principal officers and their responsibilities, (c) certification that the officers and principals of the lender have not been debarred or suspended from Federal programs, (d) Form AD

1047, (e) certification that the lender is not in default or delinquent on any Federal debt or loan, or possesses an outstanding finding of deficiency in a Federal housing program, and (f) certification of the lender's credit rating; and

(10) Documentation on bonding and insurance.

Additional Construction Lender Requirements

The Agency can guarantee the ''permanent'' loan. The Agency can only guarantee construction advances for the construction of the property if a guarantee for the permanent loan is requested for the same property. The Agency cannot, however, guarantee only the ''construction'' advances for the construction of a property.

A lender making a construction loan must demonstrate an ability to originate and service construction loans, in addition to meeting the other requirements of 7 CFR part 3565, subpart C. A lender who originates and services construction/permanent loans must agree to manage the construction and draw activities in the manner described in the Chapter 5 of HB–1–3565. Lenders must meet either the basic or the demonstrated eligibility test in paragraphs 2.4 and 2.5 of HB–1–3565 and the lender approval requirements set forth in paragraph 2.6 of HB–1–3565. Lenders must clearly identify policies and processes for multi-family construction lending. Lenders must also provide a summary of their multi-family construction lending activity in the same form as specified in paragraph 2.5 of HB–1–3565. The Agency may, at its discretion, consider other types of construction loans—such as those for commercial development—as a substitute for multi-family construction experience.

Lender Responsibilities: Lenders will be responsible for the full range of loan origination, underwriting, management, servicing, compliance issues, and property disposition activities associated with their projects. The lender will be expected to provide guidance to the prospective borrower on the Agency requirements during the application phase. Once the guarantee is issued, the lender is expected to service each loan it underwrites or contract these services to another capable entity.

Discussion of Notice Responses

Content of Notice Responses: All responses require lender information and project specific data. Incomplete responses will not be considered for funding. Lenders will be notified of incomplete responses. Complete responses are to include a signed cover letter from the lender on the lender's letterhead and the following information:

(1) *Lender certification*—The lender must certify that the lender will make a loan to the prospective borrower for the proposed project, under specified terms and conditions subject to the issuance of the GRRHP guarantee. Lender certification must be on the lender's letterhead and signed by both the lender and the prospective borrower.

(2) *Project specific data*—The lender must submit the project specific data below on the lender's letterhead, signed by both the lender and the prospective borrower.

Lender Name	Insert the lender's name.
Lender Tax ID #	Insert lender's tax ID #.
Lender Contact Name	Name of the lender contact for loan.
Mailing Address	Lender's complete mailing address.
Phone #	Phone # for lender contact.
Fax #	Insert lender's fax #.
E-mail Address	Insert lender contact e-mail address.
Borrower Name and Organization Type	State whether borrower is a Limited Partnership, Corporation, Indian Tribe, etc.
Equal Opportunity Survey	Optional Completion
Tax Classification Type	State whether borrower is for profit, not for profit, etc.
Borrower Tax ID #	Insert borrower's tax ID #.
Borrower DUNS #	Insert DUNS #.
Borrower Address, including County	Insert borrower's address and county.
Borrower Phone #	Insert borrower's phone #.

Principal or Key Member for the Borrower	Insert name and title.
Borrower Information and Statement of Housing Development Experience	Attach relevant information.
New Construction, Acquisition With Rehabilitation, or the Revitalization, Repair, and Transfer (as stipulated in 7 CFR 3560.406) of Existing Direct Section 515 Housing or MPR	State whether the project is new construction or acquisition with rehabilitation. Transfer costs, including equity payments, are subject to Agency approval and must be an eligible use of loan proceeds listed in 7 CFR 3565.205.
Project Location Town or City	Town or city in which the project is located.
Project County	County in which the project is located.
Project State	State in which the project is located.
Project Zip Code	Insert zip code.
Project Congressional District	Congressional District for project location.
Project Name	Insert project name.
Project Type	Family, senior (all residents 55 years or older), or mixed.
Property Description and Proposed Development Schedule	Provide as an attachment.
Total Project Development Cost	Enter amount for total project.
# of Units	Insert the # of units in the project.
Ratio of 3–5 bedroom units to total units	Insert percentage of 3–5 bedroom units to total units.
Cost Per Unit	Total development cost divided by # of units.
Rent	Proposed rent structure.
Median Income for Community	Provide median income for the community.
Evidence of Site Control	Attach relevant information.
Description of Any Environmental Issues	Attach relevant information.
Loan Amount	Insert the loan amount.
Interest Credit (IC)	Is interest credit requested for this loan? (Yes or No)
Basis Points over the Long Term Monthly Applicable Federal Rate	Lenders seeking interest credit must provide the maximum basis points above the Long Term Monthly AFR that will be used to calculate the interest rate. Priority points will only be given for basis points equal to or less than 250 above the Long Term Monthly AFR.
If Above Is Yes, Should Proposal Be Considered Under Non-Interest Credit Selection If Scoring Does Not Meet the Minimum Point Threshold of 55 Points for an Interest Credit Award?	If Yes, proposal must show financial feasibility for Non-IC consideration.

Borrower's Proposed Equity	Insert amount.
Tax Credits	Have tax credits been awarded? If tax credits were awarded, submit a copy of the award notice/evidence of award with your response. If not, when do you anticipate an award will be made (announced)? What is the [estimated] value of the tax credits?
Other Sources of Funds	List all funding sources other than tax credits and amounts for each source.
Loan to Total Development Cost	Guaranteed loan divided by the total development costs of project.
Debt Coverage Ratio	Net Operating Income divided by debt service payments.
Percentage of Guarantee	Percentage guarantee requested.
Collateral	Attach relevant information.
Empowerment Zone (EZ) or Enterprise Community (EC), Colonia, Tribal Lands, or State's Consolidated Plan or State Needs Assessment	Yes or No. Is the project in a recognized EZ or EC, Colonia, on an Indian Reservation, or in a place identified in the State's Consolidated Plan or State Needs Assessment as a high need community for multi-family housing?
Population	Provide the population of the county, city, or town where the project is or will be located.
Is a Guarantee for Construction Being Requested?	State yes or no. The Agency can guarantee the construction advances of the property if the guarantee for the permanent loan is requested for the same property. The Agency will not, however, guarantee only the "construction" of the property.
Loan Term	Minimum 25-year term. Maximum 40-year term (includes construction period). May amortize up to 40 years. Balloon mortgages permitted after the 25th year.

Scoring of Priority Criteria for Selection of Projects: All 2008 responses will be scored based on the criteria set forth below to establish their priority for obligation of funds. Per 7 CFR 3565.5 (b), priority will be given to projects: In smaller rural communities, in the most needy communities having the highest percentage of leveraging, having the lowest interest rate, having the highest ratio of 3–5 bedroom units to total units, or located in Empowerment Zones/Enterprise Communities or on tribal lands. In addition, the Agency may, at its sole discretion, set aside assistance for or rank projects that meet important program goals. Additional points will be awarded to responses for the revitalization, repair, and transfers of existing direct Section 515 housing.

Prior to April 25, 2008, projects with an overall score of 25 points or more and a loan to development cost ratio less than 70 percent will be processed and, when ready, obligated on a first-come-first-serve basis, provided funds are available. Projects that score less than 25 points, and projects that score 25 points or more and do not have a loan to development cost ratio less than 70 percent, may be processed up to the point of obligation, but will not be obligated until after April 25, 2008. After April 25, 2008, the Agency will select the highest scoring proposals using the procedure outlined in the **DATES** section of this Notice.

All projects that score 55 points or more on the seven priority criteria, and request and demonstrate a need for an interest credit subsidy, will receive interest credit awards, subject to the availability of funding.

The seven priority criteria for projects are listed below.

Priority 1—Projects located in eligible rural communities with the lowest populations will receive the highest points.

Population size	Points
0–10,000 people	15
10,001–15,000 people	10
15,001–20,000 people	5

Priority 2—The most needy communities as determined by the median income from the most recent census data will receive points. The Agency will allocate points to projects located in communities having the lowest median income. Points for median income will be awarded as follows:

Median income (dollars)	Points
Less than $45,000	20
$45,000—less than $55,000	15
$55,000—less than $65,000	10
$65,000—less than $75,000	5

Median income (dollars)	Points
$75,000 or more	0

Priority 3—Projects that demonstrate partnering and leveraging in order to develop the maximum number of units and promote partnerships with state and local communities will also receive points. Points will be awarded as follows:

Loan to total development cost ratio (percentage %)	Points
90–100	0
Less than 90–70	15
Less than 70–50	20
Less than 50	30

Priority 4—The development of projects on Tribal Lands, or in an Empowerment Zone or Enterprise Community will receive points. The USDA Rural Development will attribute 20 points to projects that are developed in any of the locations described in this priority. The development of projects in a Colonia or in a place identified in the State's Consolidated Plan or State Needs Assessment as a high need community for multi-family housing will receive points. The USDA Rural Development will attribute 20 points to projects that are developed in any of the locations described in this priority.

Priority 5—The USDA Rural Development will award points to projects with the highest ratio of 3–5 bedroom units to total units as follows:

Ratio of 3–5 bedroom units to total units	Points
More than 50%	6
21%–50%	5
Less than 21%—more than 0%	1

Priority 6—USDA Rural Development will award points for basis points above the long term monthly AFR used to calculate the interest rate. The score for basis points is as follows:

Basis points	Points
300 or more basis points	−30
251 to 299 basis points	−20
200 to 250 basis points	10
100 to 199 basis points	15
0 to 99 basis points	20

Priority 7—Notice responses for the revitalization, repair, and transfer (as stipulated in 7 CFR 3560.406) of existing direct section 515 housing and properties involved in the Agency's MPR program (transfer costs, including equity payments, are subject to Agency approval and must be an eligible use of loan proceeds listed in 7 CFR 3565.205) will receive an additional 30 points.

Notifications: Responses will be reviewed for completeness and eligibility. The USDA Rural Development will notify those lenders whose responses are selected via letter. The USDA Rural Development will request lenders without GRRHP lender approval to apply for GRRHP lender approval within 30 days upon receipt of notification of selection. For information regarding GRRHP lender approval, please refer to the section entitled ''*Submission of Documentation for GRRHP Lender Approval*'' in this Notice.

Lenders will also be invited to submit a complete application and the required application fee of $2,500 to the USDA Rural Development State Office where the project is located.

Submission of GRRHP Applications: Notification letters will instruct lenders to contact the USDA Rural Development State Office immediately following notification of selection to schedule required agency reviews.

USDA Rural Development State Office staff will work with lenders in the development of an application package. In response to the Notice, lenders must submit a response to the office address identified in the Notice for the scoring and ranking of a proposed GRRHP project. The lender must provide the requested information concerning the project, to establish the purpose of the proposed project, its location, and how it meets the established priorities for funding. The Agency will determine the highest ranked responses based on priority criteria and a threshold score.

Notice responses will at least include the following [but the Agency, at its sole discretion, may request additional information]:

(1) The Project

(a) A brief description of the proposed location of the project, including town, county, state, and congressional district.

(b) A description of the property and improvements, including lot size, number of units, building type, type of construction, etc., including preliminary drawings, if available.

(c) The proposed development schedule.

(d) Total project development cost.

(e) The proposed rent structure and area median income (HUD published area median incomes can be found online at *http://www.huduser.org*).

(f) Evidence of site control by the proposed borrower or a purchase option.

(g) Description of any environmental issues that may affect the project.

(h) Amount of loan to be guaranteed.

(i) Type of project (e.g., elderly or family).

(2) The Proposed Financing

(a) Proposed loan amount and the proposed borrower's equity.

(b) Proposed use of interest credit—If the lender proposes to use interest credit, this section should include the maximum basis points the lender will charge the borrower for the project. The interest rate may not be lower than the published Long Term Monthly AFR at the closing of the lender's loan. Selection and scoring criteria that the project must meet to receive interest credit will be published in the Notice.

(c) Estimated development budget (total and cost/unit) and the proposed sources and uses of funds. This information should include all proposed financing sources—the amount, type, rates and terms of loans, tax credits, or grant funds. Letters of application and commitment letters should be included, if available.

(d) Estimated loan-to-development cost ratio for the guaranteed loan.

(e) Proposed Agency guarantee percentage for guaranteed loan (under no condition can the percentage exceed 90 percent of the loan amount).

(f) Collateral—all security, in addition to the real property, proposed to secure the loan.

(3) The Proposed Borrower

(a) The name of the borrower and the type of ownership entity. List the general partners if a limited partnership, officers if a corporation or members of a Limited Liability Corporation.

(b) Borrower's contact name, mailing address, phone and fax numbers, and e-mail address.

(c) Certification that the borrower or principals of the ownership are not barred from participating in Federal housing programs and are not delinquent on any Federal debt.

(d) Borrower's unaudited or audited financial statements.

(e) Statement of borrower's housing development experience.

(4) Lender Eligibility and Approval Status

Evidence that the lender is either an approved lender for the purposes of the GRRHP or that the lender is eligible to apply for approved lender status. The lender's application for approved lender status can be submitted with the response but must be submitted to the National Office within 45 calendar days of the lender's receipt of the ''Notice to Proceed With Application Processing'' letter.

(5) Competitive Criteria

Information that shows how the proposal is responsive to the selection criteria specified in the Notice.

(6) Lender Certification

A commitment letter signed by the lender, on the lender's letterhead, indicating that the lender will make a loan to the borrower for the proposed project, under specified terms and conditions subject only to the issuance of a guarantee by the Agency.

The deadline for the submission of a complete application and application fee is 90 days from the date of notification of response selection. If the application and fee are not received by the appropriate State Office within 90 days from the date of notification, the selection is subject to cancellation, thereby allowing another response that is ready to proceed with processing to be selected. The State Office has the ability to extend this 90 day deadline for receipt of an application only for good cause.

Obligation of Program Funds: The Agency will only obligate funds to projects that meet the requirements for obligation, including having undergone a satisfactory environmental review in accordance with the National Environmental Protection Act (NEPA) and having submitted the $2,500 application fee and completed Form RD 3565–1 for the selected project.

Conditional Commitment: Once required documents for obligation and the application fee are received and all NEPA requirements have been met, the USDA Rural Development State Office will issue a conditional commitment, which stipulates the conditions that must be fulfilled before the issuance of a guarantee, in accordance with 7 CFR 3565.303.

Issuance of Guarantee: The USDA Rural Development Office will issue a guarantee to the lender for a project in accordance with 7 CFR 3565.303. No guarantee can be issued without a complete application, review of appropriate certifications, satisfactory assessment of the appropriate level of environmental review, and the completion of any conditional requirements.

Non-Discrimination Statement

USDA prohibits discrimination in all its programs and activities on the basis of race, color, national origin, age, disability, and where applicable, sex, marital status, religion, sexual orientation, genetic information, political beliefs, reprisal, or because all or part of an individual's income is derived from any public assistance program. (Not all prohibited bases apply to all programs.) Persons with disabilities who require alternative means for communication of program information (Braille, large print, audiotape, etc.) should contact USDA's TARGET Center at (202) 720–2600 (voice and TDD). To file a complaint of discrimination, write to USDA, Director, Office of Civil Rights, 1400 Independence Avenue, SW., Washington, DC 20250–9410, or call (800) 795–3272 (voice), or (202) 720–6382 (TDD). ''USDA is an equal opportunity provider, employer, and lender.''

Dated: January 29, 2008.

James C. Alsop,

Acting Administrator, Rural Housing Service.

[FR Doc. E8–1949 Filed 2–1–08; 8:45 am]

BILLING CODE 3410–XV–P

DEPARTMENT OF COMMERCE

International Trade Administration

Antidumping or Countervailing Duty Order, Finding, or Suspended Investigation; Opportunity To Request Administrative Review

AGENCY: Import Administration, International Trade Administration, Department of Commerce.

FOR FURTHER INFORMATION CONTACT: Sheila E. Forbes, Office of AD/CVD Operations, Customs Unit, Import Administration, International Trade Administration, U.S. Department of Commerce, 14th Street and Constitution Avenue, NW., Washington, DC 20230, telephone: (202) 482–4697.

Background

Each year during the anniversary month of the publication of an antidumping or countervailing duty order, finding, or suspension of investigation, an interested party, as defined in section 771(9) of the Tariff Act of 1930, as amended (the Act), may request, in accordance with section 351.213 (2004) of the Department of Commerce (the Department) Regulations, that the Department conduct an administrative review of that antidumping or countervailing duty order, finding, or suspended investigation.

Opportunity to Request a Review: Not later than the last day of February 2008,[1] interested parties may request administrative review of the following orders, findings, or suspended investigations, with anniversary dates in February for the following periods:

	Period
Antidumping Duty Proceedings	
BRAZIL:	
Stainless Steel Bar, A–351–825	2/1/07–1/31/08
Frozen Warmwater Shrimp, A–351–838	2/1/07–1/31/08
ECUADOR: Frozen Warmwater Shrimp, A–331–802	2/1/07–8/14/07
FRANCE: Uranium, A–427–818	2/1/07–1/31/08
INDIA:	
Certain Cut-to-Length Carbon-Quality Steel Plate, A–533–817	2/1/07–1/31/08
Forged Stainless Steel Flanges, A–533–809	2/1/07–1/31/08
Frozen Warmwater Shrimp, A–533–840	2/1/07–1/31/08
Stainless Steel Bar, A–533–810	2/1/07–1/31/08
Certain Preserved Mushrooms, A–533–813	2/1/07–1/31/08
INDONESIA:	
Certain Cut-to-Length Carbon-Quality Steel Plate, A–560–805	2/1/07–1/31/08
Certain Preserved Mushrooms, A–560–802	2/1/07–1/31/08
ITALY:	
Certain Cut-to-Length Carbon-Quality Steel Plate, A–475–826	2/1/07–1/31/08
Stainless Steel Butt-Weld Pipe Fittings, A–475–828	2/1/07–1/31/08

[1] Or the next business day, if the deadline falls on a weekend, federal holiday or any other day when the Department is closed.

	Period
JAPAN:	
Carbon Steel Butt-Weld Pipe Fittings, A–588–602	2/1/07–1/31/08
Certain Cut-to-Length Carbon-Quality Steel Plate, A–588–847	2/1/07–1/31/08
Stainless Steel Bar, A–588–833	2/1/07–1/31/08
MALAYSIA: Stainless Steel Butt-Weld Pipe Fittings, A–557–809	2/1/07–1/31/08
MEXICO: Welded Large Diameter Line Pipe, A–201–828	2/1/07–2/26/07
PHILIPPINES: Stainless Steel Butt-Weld Pipe Fittings, A–565–801	2/1/07–1/31/08
REPUBLIC OF KOREA:	
Certain Cut-to-Length Carbon-Quality Steel Plate, A–580–836	2/1/07–1/31/08
Stainless Steel Butt-Weld Pipe Fittings, A–580–813	2/1/07–1/31/08
TAIWAN: Forged Stainless Steel Flanges, A–583–821	2/1/07–1/31/08
THAILAND: Frozen Warmwater Shrimp, A–549–822	2/1/07–1/31/08
THE PEOPLE'S REPUBLIC OF CHINA:	
Axes/adzes, A–570–803	2/1/07–1/31/08
Bars/wedges, A–570–803	2/1/07–1/31/08
Certain Preserved Mushrooms, A–570–851	2/1/07–1/31/08
Frozen Warmwater Shrimp, A–570–893	2/1/07–1/31/08
Hammers/sledges, A–570–803	2/1/07–1/31/08
Natural Bristle Paint Brushes and Brush Heads, A–570–501	2/1/07–1/31/08
Picks/mattocks, A–570–803	2/1/07–1/31/08
SOCIALIST REPUBLIC OF VIETNAM: Frozen Warmwater Shrimp, A–552–802	2/1/07–1/31/08
Countervailing Duty Proceedings	
INDIA:	
Certain Cut-to-Length Carbon-Quality Steel Plate, C–533–818	1/1/07–12/31/07
Prestressed Concrete Steel Wire Strand, C–533–829	1/1/07–12/31/07
INDONESIA: Certain Cut-to-Length Carbon-Quality Steel Plate, C–560–806	1/1/07–12/31/07
ITALY: Certain Cut-to-Length Carbon-Quality Steel Plate, C–475–827	1/1/07–12/31/07
REPUBLIC OF KOREA: Certain Cut-to-Length Carbon-Quality Steel Plate, C–580–837	1/1/07–12/31/07
Suspension Agreements	
None.	

In accordance with section 351.213(b) of the regulations, an interested party as defined by section 771(9) of the Act, may request in writing that the Secretary conduct an administrative review. For both antidumping and countervailing duty reviews, the interested party must specify the individual producers or exporters covered by an antidumping finding or an antidumping or countervailing duty order or suspension agreement for which it is requesting a review, and the requesting party must state why it desires the Secretary to review those particular producers or exporters.[2] If the interested party intends for the Secretary to review sales of merchandise by an exporter (or a producer if that producer also exports merchandise from other suppliers) which were produced in more than one country of origin and each country of origin is subject to a separate order, then the interested party must state specifically, on an order-by-order basis, which exporter(s) the request is intended to cover.

[2] If the review request involves a non-market economy and the parties subject to the review request do not qualify for separate rates, all other exporters of subject merchandise from the non-market economy country who do not have a separate rate will be covered by the review as part of the single entity of which the named firms are a part.

Please note that, for any party the Department was unable to locate in prior segments, the Department will not accept a request for an administrative review of that party absent new information as to the party's location. Moreover, if the interested party who files a request for review is unable to locate the producer or exporter for which it requested the review, the interested party must provide an explanation of the attempts it made to locate the producer or exporter at the same time it files its request for review, in order for the Secretary to determine if the interested party's attempts were reasonable, pursuant to 19 CFR 351.303(f)(3)(ii).

As explained in *Antidumping and Countervailing Duty Proceedings: Assessment of Antidumping Duties,* 68 FR 23954 (May 6, 2003), the Department has clarified its practice with respect to the collection of final antidumping duties on imports of merchandise where intermediate firms are involved. The public should be aware of this clarification in determining whether to request an administrative review of merchandise subject to antidumping findings and orders. See also the Import Administration Web site at *http://ia.ita.doc.gov.*

Six copies of the request should be submitted to the Assistant Secretary for Import Administration, International Trade Administration, Room 1870, U.S. Department of Commerce, 14th Street & Constitution Avenue, NW., Washington, DC 20230. The Department also asks parties to serve a copy of their requests to the Office of Antidumping/Countervailing Operations, Attention: Sheila Forbes, in room 3065 of the main Commerce Building. Further, in accordance with section 351.303(f)(l)(i) of the regulations, a copy of each request must be served on every party on the Department's service list.

The Department will publish in the **Federal Register** a notice of ''Initiation of Administrative Review of Antidumping or Countervailing Duty Order, Finding, or Suspended Investigation'' for requests received by the last day of February 2008. If the Department does not receive, by the last day of February 2008, a request for review of entries covered by an order, finding, or suspended investigation listed in this notice and for the period identified above, the Department will instruct the U.S. Customs and Border Protection to assess antidumping or countervailing duties on those entries at a rate equal to the cash deposit of (or bond for) estimated antidumping or countervailing duties required on those entries at the time of entry, or withdrawal from use, for consumption and to continue to collect the cash deposit previously ordered.

This notice is not required by statute but is published as a service to the international trading community.

Dated: January 24, 2008.

Stephen J. Claeys,

Deputy Assistant Secretary for Import Administration.

[FR Doc. E8–1974 Filed 2–1–08; 8:45 am]

BILLING CODE 3510–DS–P

DEPARTMENT OF COMMERCE

International Trade Administration

[A–570–908]

Final Determination of Sales at Less Than Fair Value: Sodium Hexametaphosphate From the People's Republic of China

AGENCY: Import Administration, International Trade Administration, Department of Commerce.

DATES: *Effective Date:* February 4, 2008.

SUMMARY: On September 14, 2007, the Department of Commerce (the ''Department'') published its preliminary determination of sales at less than fair value (''LTFV'') in the antidumping investigation of sodium hexametaphosphate (''SHMP'') from the People's Republic of China (''PRC''). The period of investigation (''POI'') is July 1, 2006, through December 31, 2006. We invited interested parties to comment on our preliminary determination of sales at LTFV. The final dumping margins for this investigation are listed in the ''Final Determination Margins'' section below.

FOR FURTHER INFORMATION CONTACT: Erin Begnal or Scot Fullerton, Import Administration, International Trade Administration, U.S. Department of Commerce, 14th Street and Constitution Avenue, NW., Washington, DC 20230; *telephone:* (202) 482–1442 or (202) 482–1386, respectively.

Final Determination

We determine that SHMP from the PRC is being, or is likely to be, sold in the United States at LTFV as provided in section 735 of the Tariff Act of 1930, as amended (''the Act''). The estimated margins of sales at LTFV are shown in the ''Final Determination Margins'' section of this notice.

SUPPLEMENTARY INFORMATION:

Case History

The Department published its preliminary determination of sales at LTFV on September 14, 2007. *See Preliminary Determination of Sales at Less Than Fair Value: Sodium Hexametaphosphate from the People's Republic of China*, 72 FR 52544 (September 14, 2007) (''*Preliminary Determination*'').

On September 11, 2007, Hubei Xingfa Chemicals Group (''Hubei Xingfa'') requested a 60-day extension of the final determination. On September 28, 2007, the Department published the postponement of the final determination. *See Postponement of Final Determination of Antidumping Duty Investigation: Sodium Hexametaphosphate from the People's Republic of China*, 72 FR 55176 (September 28, 2007). On September 28, 2007, Hubei Xingfa withdrew from participating in the investigation.[1]

On September 17, 2007, the Department received an allegation from Petitioners that the Department made clerical errors in its *Preliminary Determination*.[2] On October 25, 2007, the Department found that it had made a clerical error with regard to its preliminary determination calculation for Hubei Xingfa, but found that the error was not ''significant'' to warrant amending the *Preliminary Determination*.[3]

We invited parties to comment on the *Preliminary Determination.* On November 19, 2007, the Petitioners[4] filed a case brief.

Analysis of Comments Received

All issues raised in the case and rebuttal briefs by parties to this investigation are addressed in the ''Investigation of Sodium Hexametaphosphate from the People's Republic of China: Issues and Decision Memorandum,'' dated January 28, 2008, which is hereby adopted by this notice (''Issues and Decision Memorandum''). A list of the issues which parties raised and to which we respond in the Issues and Decision Memorandum is attached to this notice as an Appendix. The Issue and Decision Memorandum is a public document and is on file in the Central Records Unit (''CRU''), Main Commerce Building, Room B–099, and is accessible on the Web at *http://www.trade.gov/ia*. The paper copy and electronic version of the memorandum are identical in content.

Changes Since the Preliminary Determination

Based on our analysis of comments received, we have made changes in our margin calculations for the separate rate respondents. Additionally, because Hubei Xingfa refused to participate in verification, we determined to apply total adverse facts available (''AFA'') to Hubei Xingfa. As AFA, we found that Hubei Xingfa did not demonstrate that it was entitled to a separate rate, and is therefore part of the PRC entity. *See Adverse Facts Available* below.

Scope of Investigation

The merchandise subject to this investigation is sodium hexametaphosphate (''SHMP''). SHMP is a water-soluble polyphosphate glass that consists of a distribution of polyphosphate chain lengths. It is a collection of sodium polyphosphate polymers built on repeating NaPO3 units. SHMP has a P2O5 content from 60 to 71 percent. Alternate names for SHMP include the following: Calgon; Calgon S; Glassy Sodium Phosphate; Sodium Polyphosphate, Glassy; Metaphosphoric Acid; Sodium Salt; Sodium Acid Metaphosphate; Graham's Salt; Sodium Hex; Polyphosphoric Acid, Sodium Salt; Glass H; Hexaphos; Sodaphos; Vitrafos; and BAC-N-FOS. SHMP is typically sold as a white powder or granule (crushed) and may also be sold in the form of sheets (glass) or as a liquid solution. It is imported under heading 2835.39.5000, HTSUS. It may also be imported as a blend or mixture under heading 3824.90.3900, HTSUS. The American Chemical Society, Chemical Abstract Service (''CAS'') has assigned the name ''Polyphosphoric Acid, Sodium Salt'' to SHMP. The CAS registry number is 68915–31–1. However, SHMP is commonly identified by CAS No. 10124–56–8 in the market. For purposes of the investigation, the narrative description is dispositive, not the tariff heading, CAS registry number or CAS name.

The product covered by this investigation includes SHMP in all grades, whether food grade or technical grade. The product covered by this investigation includes SHMP without regard to chain length i.e., whether regular or long chain. The product covered by this investigation includes SHMP without regard to physical form, whether glass, sheet, crushed, granule,

[1] *See* Letter from Greenberg Traurig to the Department of Commerce, regarding ''Sodium Hexametaphosphate from the People's Republic of China: Withdrawal from Participation,'' dated September 28, 2007 (''Hubei Xingfa Withdrawal Letter'').

[2] *See* Letter from Williams Mullen to the Department of Commerce, regarding ''Sodium Hexametaphosphate from China: Clerical Error Comments,'' dated September 17, 2007.

[3] *See* Memorandum to James C. Doyle, Director, AD/CVD Operations, Office 9 through Scot T. Fullerton, Program Manager, AD/CVD Operations, Office 9, from Erin Begnal, Senior International Trade Analyst, AD/CVD Operations, Office 9, regarding ''Antidumping Duty Investigation of Sodium Hexametaphosphate from the People's Republic of China: Allegation of Ministerial Errors,'' dated October 25, 2007 (''Ministerial Error Memo'').

[4] ICL Performance Products, LP and Innophos, Inc.

powder, fines, or other form, and whether or not in solution.

However, the product covered by this investigation does not include SHMP when imported in a blend with other materials in which the SHMP accounts for less than 50 percent by volume of the finished product.

Scope Comments

We have addressed comments regarding the Scope in our Issues and Decision Memorandum and have determined to revise the scope of this investigation. *See Issues and Decision Memorandum* at Comment 2.

Adverse Facts Available

Section 776(a)(2) of the Act provides that, if an interested party (A) withholds information requested by the Department, (B) fails to provide such information by the deadline, or in the form or manner requested, (C) significantly impedes a proceeding, or (D) provides information that cannot be verified, the Department shall use, subject to sections 782(d) and (e) of the Act, facts otherwise available in reaching the applicable determination. Pursuant to section 782(e) of the Act, the Department shall not decline to consider submitted information if all of the following requirements are met: (1) The information is submitted by the established deadline; (2) the information can be verified; (3) the information is not so incomplete that it cannot serve as a reliable basis for reaching the applicable determination; (4) the interested party has demonstrated that it acted to the best of its ability; and (5) the information can be used without undue difficulties. On September 28, 2007, subsequent to the *Preliminary Determination* and before the commencement of verification, counsel for Hubei Xingfa informed the Department that it would not continue its participation in the instant investigation. *See* Hubei Xingfa Withdrawal Letter dated September 28, 2007. Because Hubei Xingfa ceased participation in the instant investigation, the Department was not able to conduct its verification of Hubei Xingfa's responses. Verification is integral to the Department's analysis because it allows the Department to satisfy itself that it is relying upon accurate information and calculating dumping margins as accurately as possible. By failing to participate in verification, Hubei Xingfa prevented the Department from verifying its reported information, including separate rates information, and significantly impeded the proceeding. Moreover, by not permitting verification, Hubei Xingfa failed to demonstrate that it operates free of government control and is entitled to a separate rate. Therefore, we find the use of facts available, pursuant to sections 776(a)(2)(C) and (D), to be appropriate in determining the applicable rate for Hubei Xingfa.

Section 776(b) of the Act authorizes the Department to use an adverse inference with respect to an interested party if the Department finds that the party failed to cooperate by not acting to the best of its ability to comply with a request for information. *See, e.g., Certain Welded Carbon Steel Pipes and Tubes From Thailand: Final Results of Antidumping Duty Administrative Review*, 62 FR 53808, 53819–20 (October 16, 1997); *see also Crawfish Processors Alliance* v. *United States*, 343 F. Supp.2d 1242, 1270–1271 (CIT 2004) (approving use of AFA when respondent refused to participate in verification). We find that Hubei Xingfa's late withdrawal from participation and refusal to participate in verification constitutes a failure to cooperate by not acting to the best of its ability to comply with a request from the Department. *See* section 776(b) of the Act. Therefore, pursuant to section 776(b) of the Act, we find that when selecting from among the facts available, an adverse inference is warranted. As AFA, due to its failure to demonstrate separateness, we have, as AFA, treated Hubei Xingfa as part of the PRC-wide entity and thus will receive the rate applicable to PRC-wide entity, which is 188.05 percent. *See* the sections entitled ''The PRC-Wide Rate'' and ''Corroboration,'' below, for a discussion of the selection and corroboration of the PRC-Wide rate.

Surrogate Country

In the *Preliminary Determination*, we stated that we had selected India as the appropriate surrogate country to use in this investigation for the following reasons: (1) It is a significant producer of comparable merchandise; (2) it is at a similar level of economic development pursuant to 773(c)(4) of the Act; and (3) we have reliable data from India that we can use to value the factors of production. *See Preliminary Determination*. For the final determination, we received no comments and made no changes to our findings with respect to the selection of a surrogate country.

Separate Rates

In proceedings involving non-market-economy (''NME'') countries, the Department begins with a rebuttable presumption that all companies within the country are subject to government control and, thus, should be assigned a single antidumping duty deposit rate. It is the Department's policy to assign all exporters of merchandise subject to an investigation in an NME country this single rate unless an exporter can demonstrate that it is sufficiently independent so as to be entitled to a separate rate. *See Final Determination of Sales at Less Than Fair Value: Sparklers from the People's Republic of China*, 56 FR 20588 (May 6, 1991) (''*Sparklers*''), as amplified by *Notice of Final Determination of Sales at Less Than Fair Value: Silicon Carbide from the People's Republic of China*, 59 FR 22585 (May 2, 1994) (''*Silicon Carbide*''), and Section 351.107(d) of the Department's regulations.

In the *Preliminary Determination*, we found that the separate rate applicants, Jiangyin Chengxing International Trading Co., Ltd. (''Chengxing'') and Sichuan Mianzhu Norwest Phosphate Chemical Company Limited (''Norwest''), demonstrated their eligibility for separate-rate status. For the final determination, we continue to find that the evidence placed on the record of this investigation by Chengxing and Norwest demonstrate both a *de jure* and *de facto* absence of government control, with respect to their respective exports of the merchandise under investigation, and, thus are eligible for separate rate status.

In the *Preliminary Determination*, we assigned the rate for Hubei Xingfa, who was a cooperating respondent, as a separate rate to Chengxing and Norwest. However, we have found that Hubei Xingfa has not demonstrated entitlement to a separate rate for this final determination. As such, Hubei Xingfa will be assigned the PRC-wide rate, which is based on AFA. Normally the separate rate is determined based on the estimated weighted average dumping margins established for exporters and producers individually investigated, excluding *de minimis* margins or margins based entirely on AFA. *See* section 735(c)(5)(A). If, however, the estimated weighted average margins for all individually investigated respondents are *de minimis* or based entirely on AFA, the Department may use any reasonable method. *See* section 735(c)(5)(B). In this proceeding, because the rate for all individually investigated respondents is based on AFA, we have relied on information from the petition to determine a rate to be applied to the respondents that have demonstrated entitlement to a separate rate. *See, e.g., Notice of Final Determination of Sales at Less Than Fair Value and Affirmative Final Determination of Critical*

Circumstances: Glycine from Japan, 72 FR 67271 (November 28, 2007) (citing *Notice of Final Determinations of Sales at Less Than Fair Value: Certain Cold-Rolled Flat-Rolled Carbon-Quality Steel Products From Argentina, Japan and Thailand*, 65 FR 5520, 5527–28 (February 4, 2000) and *Notice of Final Determination of Sales at Less Than Fair Value: Stainless Steel Plate in Coil from Canada*, 64 FR 15457 (March 31, 1999)). Specifically, we have assigned an average of the margins calculated for purposes of initiation as the separate rate for the final determination. *See Initiation of Antidumping Duty Investigation: Sodium Hexametaphosphate From the People's Republic of China*, 72 FR 9926 (March 6, 2007) (''*Initiation Notice*''). *See also* Memorandum to the File, from Erin Begnal, Senior International Trade Analyst, AD/CVD Operations, Office 9, regarding ''Calculation of the Separate Rate'' dated January 22, 2008.

To corroborate the initiation margins for use as a separate rate, to the extent appropriate information was available, we reviewed the adequacy and accuracy of the information in the petition during our pre-initiation analysis. See *Initiation Checklist*. We examined evidence supporting the calculations in the petition to determine the probative value of the margins alleged in the petition for use as the separate rate. During our pre-initiation analysis, we examined the key elements of the export-price and normal-value calculations used in the petition to derive margins. Also, during our pre-initiation analysis, we examined information from various independent sources provided either in the petition or, based on our requests, in supplements to the petition, that corroborates key elements of the export-price and normal-value calculations used in the petition to derive estimated margins. We received no comments as to the relevance or probative value of this information. Therefore, the Department finds that the rates derived from the petition for purposes of initiation are reliable for purposes of calculating the separate rate. We determined in the *Preliminary Determination* that Yibin Tianyuan Group Co., Ltd. (''Tianyuan'') is not entitled to a separate rate. We received no comments on this issue and continue to find that Tianyuan is not entitled to a separate rate.

The PRC-Wide Rate

In the *Preliminary Determination*, the Department found that certain companies and the PRC-wide entity did not respond to our requests for information. In the *Preliminary Determination* we treated these PRC producers/exporters as part of the PRC-wide entity because they did not demonstrate that they operate free of government control over their export activities. No additional information has been placed on the record with respect to these entities after the *Preliminary Determination.* The PRC-wide entity has not provided the Department with the requested information; therefore, pursuant to section 776(a)(2)(A) of the Act, the Department continues to find that the use of facts available is appropriate to determine the PRC-wide rate. Section 776(b) of the Act provides that, in selecting from among the facts otherwise available, the Department may employ an adverse inference if an interested party fails to cooperate by not acting to the best of its ability to comply with requests for information. *See Notice of Final Determination of Sales at Less Than Fair Value: Certain Cold-Rolled Flat-Rolled Carbon-Quality Steel Products from the Russian Federation*, 65 FR 5510, 5518 (February 4, 2000). *See also*, ''*Statement of Administrative Action*'' accompanying the URAA, H.R. Rep. No. 103–316, vol. 1, at 870 (1994) (''*SAA*''). We determined that, because the PRC-wide entity did not respond to our request for information, it has failed to cooperate to the best of its ability. Therefore, the Department finds that, in selecting from among the facts otherwise available, an adverse inference is appropriate for the PRC-wide entity.

Because we begin with the presumption that all companies within an NME country are subject to government control and because only the companies listed under the ''Final Determination Margins'' section below have overcome that presumption, we are applying a single antidumping rate—the PRC-wide rate—to all other exporters of subject merchandise from the PRC. Such companies did not demonstrate entitlement to a separate rate. *See*, *e.g.*, *Synthetic Indigo from the People's Republic of China: Notice of Final Determination of Sales at Less Than Fair Value*, 65 FR 25706 (May 3, 2000). The PRC-wide rate applies to all entries of subject merchandise except for entries from the respondents which are listed in the ''Final Determination Margins'' section below.

At the *Preliminary Determination*, we assigned to the PRC-wide entity the calculated margin for Hubei Xingfa, the highest rate calculated for any respondent in the investigation. For the final determination, as total AFA, we have assigned to the PRC-wide entity the rate of 188.05 percent, which is the rate based on the information supplied by Hubei Xingfa in the preliminary determination, with adjustments made for clerical errors. *See* Ministerial Error Memo. In selecting the AFA rate for the PRC-wide entity, we did not use the petition rates because we have an alternative that we find to be sufficiently adverse to effectuate the purpose of the AFA provision of the statute. *See*, *e.g.*, *Notice of Final Determination of Sales at Less Than Fair Value: Certain Frozen and Canned Warmwater Shrimp From Brazil*, 69 FR 76910, 76912 (December 23, 2004). *See also*, *Notice of Final Determination of Sales at Less Than Fair Value: Carbon and Certain Alloy Steel Wire Rod From Moldova*, 67 FR 55790 (August 30, 2002) and accompanying Issues and Decision Memorandum at Comment 2 and *Notice of Final Determination of Sales at Less Than Fair Value: Certain Cold-Rolled Carbon Steel Flat Products From Venezuela*, 67 FR 62119, 62120 (October 3, 2002). We assigned the rate of 188.05 percent, which was based on information submitted by Hubei Xingfa in its questionnaire responses and database submissions, and remains on the record of this investigation.

Corroboration

Section 776(c) of the Act provides that, when the Department relies on secondary information in using the facts otherwise available, it must, to the extent practicable, corroborate that information from independent sources that are reasonably at its disposal. We have interpreted ''corroborate'' to mean that we will, to the extent practicable, examine the reliability and relevance of the information submitted. *See Certain Cold-Rolled Flat-Rolled Carbon-Quality Steel Products From Brazil: Notice of Final Determination of Sales at Less Than Fair Value*, 65 FR 5554, 5568 (February 4, 2000); *See*, *e.g.*, *Tapered Roller Bearings and Parts Thereof, Finished and Unfinished, from Japan, and Tapered Roller Bearings, Four Inches or Less in Outside Diameter, and Components Thereof, from Japan; Preliminary Results of Antidumping Duty Administrative Reviews and Partial Termination of Administrative Reviews*, 61 FR 57391, 57392 (November 6, 1996). Because the AFA rate is based on information provided to us by a respondent to this investigation, it is not considered to be secondary information, and therefore, needs not be corroborated. We conclude that this data, although unverified, continues to be the best information reasonably available to us to effectuate the purpose of AFA.

Final Determination Margins

We determine that the following percentage weighted-average margins exist for the POI:

SODIUM HEXAMETAPHOSPHATE FROM THE PRC

Manufacturer/exporter	Weighted-average margin (percent)
Jiangyin Chengxing International Trading Co., Ltd.	92.02
Sichuan Mianzhu Norwest Phosphate Chemical Company Limited	92.02
PRC-Wide Rate (including Yibin Tianyuan Group Co., Ltd., Mianyang Aostar Phosphorous Chemical Industry Co., Ltd., and Hubei Xingfa Chemicals Group Co., Ltd.)	188.05

Disclosure

We will disclose the calculations performed within five days of the date of publication of this notice to parties in this proceeding in accordance with 19 CFR 351.224(b).

Continuation of Suspension of Liquidation

In accordance with section 735(c)(1)(B) of the Act, we are directing U.S. Customs and Border Protection (''CBP'') to continue to suspend liquidation of all imports of subject merchandise that are entered or withdrawn from warehouse, for consumption on or after September 14, 2007, the date of publication of the preliminary determination in the **Federal Register**. We will instruct CBP to continue to require a cash deposit or the posting of a bond for all companies based on the estimated weighted-average dumping margins shown above. The suspension of liquidation instructions will remain in effect until further notice.

ITC Notification

In accordance with section 735(d) of the Act, we have notified the International Trade Commission (''ITC'') of our final determination of sales at LTFV. As our final determination is affirmative, in accordance with section 735(b)(2) of the Act, within 45 days the ITC will determine whether the domestic industry in the United States is materially injured, or threatened with material injury, by reason of imports or sales (or the likelihood of sales) for importation of the subject merchandise. If the ITC determines that material injury or threat of material injury does not exist, the proceeding will be terminated and all securities posted will be refunded or canceled. If the ITC determines that such injury does exist, the Department will issue an antidumping duty order directing CBP to assess antidumping duties on all imports of the subject merchandise entered, or withdrawn from warehouse, for consumption on or after the effective date of the suspension of liquidation.

Notification Regarding APO

This notice also serves as a reminder to the parties subject to administrative protective order (''APO'') of their responsibility concerning the disposition of proprietary information disclosed under APO in accordance with 19 CFR 351.305. Timely notification of return or destruction of APO materials or conversion to judicial protective order is hereby requested. Failure to comply with the regulations and the terms of an APO is a sanctionable violation.

This determination is issued and published in accordance with sections 735(d) and 777(i)(1) of the Act.

Dated: January 28, 2008.

David M. Spooner,

Assistant Secretary for Import Administration.

Appendix

Comment 1: Scope Revision
Comment 2: Basis for the Final Determination

[FR Doc. E8–1971 Filed 2–1–08; 8:45 am]
BILLING CODE 3510–DS–P

DEPARTMENT OF COMMERCE

National Oceanic and Atmospheric Administration

Proposed Information Collection; Comment Request; Northwest Region Vessel Identification Requirements

AGENCY: National Oceanic and Atmospheric Administration (NOAA), Commerce.

ACTION: Notice.

SUMMARY: The Department of Commerce, as part of its continuing effort to reduce paperwork and respondent burden, invites the general public and other Federal agencies to take this opportunity to comment on proposed and/or continuing information collections, as required by the Paperwork Reduction Act of 1995.

DATES: Written comments must be submitted on or before April 4, 2008.

ADDRESSES: Direct all written comments to Diana Hynek, Departmental Paperwork Clearance Officer, Department of Commerce, Room 6625, 14th and Constitution Avenue, NW., Washington, DC 20230 (or via the Internet at *dHynek@doc.gov*).

FOR FURTHER INFORMATION CONTACT: Requests for additional information or copies of the information collection instrument and instructions should be directed to Jamie Goen, (206) 526–4646 or *jamie.goen@noaa.gov.*

SUPPLEMENTARY INFORMATION:

I. Abstract

The success of fisheries management programs depends significantly on regulatory compliance. The vessel identification requirement is essential to facilitate enforcement. The ability to link fishing or other activity to the vessel owner or operator is crucial to enforcement of regulations issued under the authority of the Magnuson-Stevens Fishery Conservation and Management Act. A vessel's official number is required to be displayed on the port and starboard sides of the deckhouse or hull, and on a weather deck. It identifies each vessel and should be visible at distances at sea and in the air. Vessels that qualify for particular fisheries are readily identified, gear violations are more readily prosecuted, and this allows for more cost-effective enforcement. Cooperating fishermen also use the number to report suspicious activities that they observe. The regulation-compliant fishermen ultimately benefit as unauthorized and illegal fishing is deterred and more burdensome regulations are avoided.

II. Method of Collection

Fishing vessel owners physically mark vessel with identification numbers in three locations per vessel.

III. Data

OMB Number: 0648–0355.
Form Number: None.
Type of Review: Regular submission.
Affected Public: Business or other for-profit organizations.
Estimated Number of Respondents: 1,693.
Estimated Time per Response: 45 minutes (15 minutes per marking).
Estimated Total Annual Burden Hours: 1,270.
Estimated Total Annual Cost to Public: $59,255.

IV. Request for Comments

Comments are invited on: (a) Whether the proposed collection of information is necessary for the proper performance of the functions of the agency, including whether the information shall have practical utility; (b) the accuracy of the agency's estimate of the burden

(including hours and cost) of the proposed collection of information; (c) ways to enhance the quality, utility, and clarity of the information to be collected; and (d) ways to minimize the burden of the collection of information on respondents, including through the use of automated collection techniques or other forms of information technology.

Comments submitted in response to this notice will be summarized and/or included in the request for OMB approval of this information collection; they also will become a matter of public record.

Dated: January 29, 2008.

Gwellnar Banks,

Management Analyst, Office of the Chief Information Officer.

[FR Doc. E8–1883 Filed 2–1–08; 8:45 am]

BILLING CODE 3510–22–P

DEPARTMENT OF COMMERCE

National Oceanic and Atmospheric Administration

Proposed Information Collection; Comment Request; Northwest Region Gear Identification Requirements

AGENCY: National Oceanic and Atmospheric Administration (NOAA), Commerce.

ACTION: Notice.

SUMMARY: The Department of Commerce, as part of its continuing effort to reduce paperwork and respondent burden, invites the general public and other Federal agencies to take this opportunity to comment on proposed and/or continuing information collections, as required by the Paperwork Reduction Act of 1995.

DATES: Written comments must be submitted on or before April 4, 2008.

ADDRESSES: Direct all written comments to Diana Hynek, Departmental Paperwork Clearance Officer, Department of Commerce, Room 6625, 14th and Constitution Avenue, NW., Washington, DC 20230 (or via the Internet at *dHynek@doc.gov*).

FOR FURTHER INFORMATION CONTACT: Requests for additional information or copies of the information collection instrument and instructions should be directed to Jamie Goen, (206) 526–4646 or *jamie.goen@noaa.gov*.

SUPPLEMENTARY INFORMATION:

I. Abstract

The success of fisheries management programs depends significantly on regulatory compliance. The requirements that fishing gear be marked are essential to facilitate enforcement. The ability to link fishing gear to the vessel owner or operator is crucial to the enforcement of regulations issued under the authority of the Magnuson-Stevens Fishery Conservation and Management Act. The marking of fishing gear is also valuable in actions concerning damage, loss, and civil proceedings. The regulations specify fishing gear must be marked with the vessel's official number, federal permit or tag number, or some other specified form of identification. The regulations further specify how the gear is to be marked (e.g., location and color). Law enforcement personnel rely on this information to assure compliance with fisheries management regulations. Gear that is not properly identified is confiscated. The identifying number on fishing gear is used by NMFS, the U.S. Coast Guard, and other marine agencies in issuing violations, prosecutions, and other enforcement actions. Gear marking helps ensure that a vessel harvests fish only from its own traps/pots/other gear and that traps/pots/other gear are not illegally placed. Gear violations are more readily prosecuted when the gear is marked, allowing for more cost effective enforcement. Cooperating fishermen also use the number to report placement or occurrence of gear in unauthorized areas. The regulation-compliant fishermen ultimately benefit from this requirement, because unauthorized and illegal fishing is deterred and more burdensome regulations are avoided.

II. Method of Collection

The physical marking of fishing buoys is done by the affected public (fishermen in the Pacific Coast Groundfish Fishery) according to regulation. No information is collected.

III. Data

OMB Number: 0648–0352.

Form Number: None.

Type of Review: Regular submission.

Affected Public: Business or other for-profit organizations.

Estimated Number of Respondents: 548.

Estimated Time per Response: 3 hours (15 minutes per marking).

Estimated Total Annual Burden Hours: 1,782.

Estimated Total Annual Cost to Public: $2,000.

IV. Request for Comments

Comments are invited on: (a) Whether the proposed collection of information is necessary for the proper performance of the functions of the agency, including whether the information shall have practical utility; (b) the accuracy of the agency's estimate of the burden (including hours and cost) of the proposed collection of information; (c) ways to enhance the quality, utility, and clarity of the information to be collected; and (d) ways to minimize the burden of the collection of information on respondents, including through the use of automated collection techniques or other forms of information technology.

Comments submitted in response to this notice will be summarized and/or included in the request for OMB approval of this information collection; they also will become a matter of public record.

Dated: January 29, 2008.

Gwellnar Banks,

Management Analyst, Office of the Chief Information Officer.

[FR Doc. E8–1884 Filed 2–1–08; 8:45 am]

BILLING CODE 3510–22–P

DEPARTMENT OF COMMERCE

National Oceanic and Atmospheric Administration

Proposed Information Collection; Comment Request; Large Pelagic Fishing Survey

AGENCY: National Oceanic and Atmospheric Administration (NOAA), Commerce.

ACTION: Notice.

SUMMARY: The Department of Commerce, as part of its continuing effort to reduce paperwork and respondent burden, invites the general public and other Federal agencies to take this opportunity to comment on proposed and/or continuing information collections, as required by the Paperwork Reduction Act of 1995.

DATES: Written comments must be submitted on or before April 4, 2008.

ADDRESSES: Direct all written comments to Diana Hynek, Departmental Paperwork Clearance Officer, Department of Commerce, Room 6625, 14th and Constitution Avenue, NW., Washington, DC 20230 (or via the Internet at *dHynek@doc.gov*).

FOR FURTHER INFORMATION CONTACT: Requests for additional information or copies of the information collection instrument and instructions should be directed to Dr. Ronald J. Salz, (301) 713–2328 or *ron.salz@noaa.gov.*

SUPPLEMENTARY INFORMATION:

I. Abstract

The Large Pelagic Fishing Survey consists of dockside and telephone surveys of recreational anglers for large pelagic fish (tunas, sharks, and billfish) in the Atlantic Ocean. The survey provides NMFS with information to monitor catch of bluefin tuna, marlin and other federally-managed species. Catch monitoring in these fisheries and collection of catch and effort statistics for all pelagic fish is required under the Atlantic Tunas Convention Act and the Magnuson-Stevens Fishery Conservation and Management Act. The information collected is essential for the U.S. to meet its reporting obligations to the International Commission for the Conservation of Atlantic Tuna.

Due to funding limitations, the Large Pelagic Fishing Survey has only been conducted from Maine through Virginia in previous years. In 2008 NMFS proposes to conduct pilot studies to characterize the recreational large pelagic fisheries in the South Atlantic, Gulf of Mexico, and Caribbean regions.

II. Method of Collection

Dockside and telephone interviews are used for the Large Pelagic Fishing Survey. In lieu of telephone interviews, respondents may also provide information via faxed logsheets or online via a web tool. The pilot studies in the South Atlantic, Gulf of Mexico, and Caribbean will use telephone interviews.

III. Data

OMB Number: 0648–0380.

Form Number: None.

Type of Review: Regular submission.

Affected Public: Individuals or households, business or other for-profit organizations.

Estimated Number of Respondents: 1,000 new requirements (18,000 total).

Estimated Time per Response: 15 minutes for a telephone characterization interview.

Estimated Total Annual Burden Hours: 2,500 new requirements (4,871 total).

Estimated Total Annual Cost to Public: $0.

IV. Request for Comments

Comments are invited on: (a) Whether the proposed collection of information is necessary for the proper performance of the functions of the agency, including whether the information shall have practical utility; (b) the accuracy of the agency's estimate of the burden (including hours and cost) of the proposed collection of information; (c) ways to enhance the quality, utility, and clarity of the information to be collected; and (d) ways to minimize the burden of the collection of information on respondents, including through the use of automated collection techniques or other forms of information technology.

Comments submitted in response to this notice will be summarized and/or included in the request for OMB approval of this information collection; they also will become a matter of public record.

Dated: January 29, 2008.

Gwellnar Banks,

Management Analyst, Office of the Chief Information Officer.

[FR Doc. E8–1885 Filed 2–1–08; 8:45 am]

BILLING CODE 3510–22–P

DEPARTMENT OF COMMERCE

National Oceanic and Atmospheric Administration

Hydrographic Services Review Panel Meeting

AGENCY: National Ocean Service, National Oceanic and Atmospheric Administration (NOAA), Department of Commerce.

ACTION: Notice of open meeting.

SUMMARY: The Hydrographic Services Review Panel (HSRP) was established by the Secretary of Commerce to advise the Under Secretary of Commerce for Oceans and Atmosphere on matters related to the responsibilities and authorities set forth in section 303 of the Hydrographic Services Improvement Act of 1998, its amendments, and such other appropriate matters that the Under Secretary refers to the Panel for review and advice.

Date and Time: The meeting will be held Friday, March 7, 2008, from 8 a.m. to 5:30 p.m.

Location: The Doubletree Grand Hotel Biscayne Bay, 1717 North Bayshore Drive, Miami, Florida 33132, telephone: 305–372–0313. The times and agenda topics are subject to change. Refer to the HSRP Web site listed below for the most current meeting agenda.

FOR FURTHER INFORMATION CONTACT: Captain Steven Barnum, NOAA, Designated Federal Official (DFO), Office of Coast Survey, National Ocean Service (NOS), NOAA (N/CS), 1315 East West Highway, Silver Spring, Maryland 20910; Telephone: 301–713–2770, Fax: 301–713–4019; e-mail: *Hydroservices.panel@noaa.gov* or visit the NOAA HSRP Web site at *http://nauticalcharts.noaa.gov/ocs/hsrp/hsrp.htm.*

SUPPLEMENTARY INFORMATION: The meeting will be open to the public and public comment periods will be scheduled at various times throughout the meeting. These comment periods will be part of the final agenda that will be published before the meeting date on the HSRP Web site listed above. Each individual or group making a verbal presentation will be limited to a total time of five (5) minutes. Written comments (at least 30 copies) should be submitted to the DFO by February 27, 2008. Written comments received by the DFO after February 27, 2008, will be distributed to the HSRP, but may not be reviewed before the meeting date. Approximately 25 seats will be available for the public, on a first-come, first-served basis.

Matters to be Considered: (1) NOAA's planned actions to address recommendations in the HSRP Special Report, ''HSRP Most Wanted Hydrographic Services Improvements;'' (2) Updates on NOAA's Height Modernization, Fleet Recapitalization, Integrated Ocean and Coastal Mapping, and Integrated Ocean Observing System Projects; (3) briefings on the U.S. Committee on the Marine Transportation System's (CMTS) response and activities related to the HSRP Special Report and status of the CMTS Navigation Technology Integration Action Team; and (4) public statements.

Dated: January 28, 2008.

Captain Steven Barnum,

NOAA Director, Office of Coast Survey, National Ocean Service, National Oceanic and Atmospheric Administration.

[FR Doc. E8–1965 Filed 2–1–08; 8:45 am]

BILLING CODE 3510–JE–P

DEPARTMENT OF DEFENSE

Office of the Secretary

[DoD–2006–OS–0030]

Privacy Act of 1974; System of Records

AGENCY: Department of Defense.

ACTION: Notice to delete a System of Records.

SUMMARY: The Defense Threat Reduction Agency is deleting a system of records notice from its existing inventory of records systems subject to the Privacy Act of 1974, (5 U.S.C. 552a), as amended.

DATES: This proposed action will be effective without further notice on March 5, 2008 unless comments are

received which result in a contrary determination.

ADDRESSES: Send comments to the Freedom of Information and Privacy Office, Defense Threat Reduction Agency, 8725 John J. Kingman Road, Fort Belvoir, VA 22060–6201.

FOR FURTHER INFORMATION CONTACT: Ms. Brenda Carter at (703) 767–1771.

SUPPLEMENTARY INFORMATION: The Office of the Secretary of Defense systems of records notices subject to the Privacy Act of 1974, (5 U.S.C. 552a), as amended, have been published in the **Federal Register** and are available from the address above.

Dated: January 30, 2008.

L.M. Bynum,

Alternate OSD Federal Register Liaison Officer, Department of Defense.

Deletion

HDTRA 004

SYSTEM NAME:

Nuclear Weapons Accident Exercise Personnel Radiation Exposure Records (August 24, 2005, 70 FR 45592).

REASON:

The Defense Threat Reduction Agency does not have a mission requirement to maintain these records. However, these records are maintained under the DoD System of Records F044 AF SG O, United States Air Force Master Radiation Exposure Registry. Published in the **Federal Register** on November 18, 2003, in Volume 68, Page Number 65042.

[FR Doc. E8–1940 Filed 2–1–08; 8:45 am]

BILLING CODE 5001–06–P

DEPARTMENT OF DEFENSE

Office of the Secretary

Publication of Housing Price Inflation Adjustment Under 50 U.S.C. App. Section 531

AGENCY: DoD, Office of the Under Secretary (Personnel and Readiness).

ACTION: Notice.

SUMMARY: The Servicemembers Civil Relief Act, as codified at 50 U.S.C. App. Section 531, prohibits a landlord from evicting a Service member (or the Service member's family) from a residence during a period of military service except by court order. The law as originally passed by Congress applied to dwellings with monthly rents of $2400 or less. The law requires the Department of Defense to adjust this amount annually to reflect inflation, and to publish the new amount in the **Federal Register**. We have applied the inflation index required by the statute. The maximum monthly rental amount for 50 U.S.C. App. Section 531 (a)(1)(A)(ii) as of January 1, 2008, will be $2,831.13.

DATES: *Effective Dates:* January 1, 2008.

FOR FURTHER INFORMATION CONTACT: Colonel S. Shumake, Office of the Under Secretary of Defense for Personnel and Readiness, (703) 697–3387.

Dated: January 30, 2008.

L.M. Bynum,

Alternate OSD Federal Register Liaison Officer, Department of Defense.

[FR Doc. E8–1941 Filed 2–1–08; 8:45 am]

BILLING CODE 5001–06–P

DEPARTMENT OF EDUCATION

Notice of Proposed Information Collection Requests

AGENCY: Department of Education.

SUMMARY: The IC Clearance Official, Regulatory Information Management Services, Office of Management, invites comments on the proposed information collection requests as required by the Paperwork Reduction Act of 1995.

DATES: Interested persons are invited to submit comments on or before April 4, 2008.

SUPPLEMENTARY INFORMATION: Section 3506 of the Paperwork Reduction Act of 1995 (44 U.S.C. Chapter 35) requires that the Office of Management and Budget (OMB) provide interested Federal agencies and the public an early opportunity to comment on information collection requests. OMB may amend or waive the requirement for public consultation to the extent that public participation in the approval process would defeat the purpose of the information collection, violate State or Federal law, or substantially interfere with any agency's ability to perform its statutory obligations. The IC Clearance Official, Regulatory Information Management Services, Office of Management, publishes that notice containing proposed information collection requests prior to submission of these requests to OMB. Each proposed information collection, grouped by office, contains the following: (1) Type of review requested, e.g. new, revision, extension, existing or reinstatement; (2) Title; (3) Summary of the collection; (4) Description of the need for, and proposed use of, the information; (5) Respondents and frequency of collection; and (6) Reporting and/or Recordkeeping burden. OMB invites public comment. The Department of Education is especially interested in public comment addressing the following issues: (1) Is this collection necessary to the proper functions of the Department; (2) will this information be processed and used in a timely manner; (3) is the estimate of burden accurate; (4) how might the Department enhance the quality, utility, and clarity of the information to be collected; and (5) how might the Department minimize the burden of this collection on the respondents, including through the use of information technology.

Dated: January 28, 2008.

Angela C. Arrington,

IC Clearance Official, Regulatory Information Management Services, Office of Management.

Office of Special Education and Rehabilitative Services

Type of Review: Revision.

Title: Independent Living Services for Older Individuals Who Are Blind.

Frequency: Annually.

Affected Public: State, Local, or Tribal Gov't, SEAs or LEAs.

Reporting and Recordkeeping Hour Burden:

Responses: 56.

Burden Hours: 446.

Abstract: This data collection instrument is being submitted to obtain approval for information collection on the Independent Living Services for Older Individuals Who Are Blind program. The data to be collected will include information related to staff, consumer demographics, cost of services, and services provided. This data will be used to evaluate and construct a profile for the program nationwide. The respondents will be the managers of the Independent Living Services for Older Individuals Who Are Blind program in each of the 50 states and territories.

Requests for copies of the proposed information collection request may be accessed from *http://edicsweb.ed.gov,* by selecting the ''Browse Pending Collections'' link and by clicking on link number 3560. When you access the information collection, click on ''Download Attachments'' to view. Written requests for information should be addressed to U.S. Department of Education, 400 Maryland Avenue, SW., LBJ, Washington, DC 20202–4537. Requests may also be electronically mailed to *ICDocketMgr@ed.gov* or faxed to 202–401–0920. Please specify the complete title of the information collection when making your request.

Comments regarding burden and/or the collection activity requirements should be electronically mailed to

ICDocketMgr@ed.gov. Individuals who use a telecommunications device for the deaf (TDD) may call the Federal Information Relay Service (FIRS) at 1–800–877–8339.

[FR Doc. 08–487 Filed 2–1–08; 8:45 am]

BILLING CODE 4000–01–M

DEPARTMENT OF EDUCATION

Notice of Proposed Information Collection Requests

AGENCY: Department of Education.

SUMMARY: The IC Clearance Official, Regulatory Information Management Services, Office of Management, invites comments on the proposed information collection requests as required by the Paperwork Reduction Act of 1995.

DATES: Interested persons are invited to submit comments on or before April 4, 2008.

SUPPLEMENTARY INFORMATION: Section 3506 of the Paperwork Reduction Act of 1995 (44 U.S.C. Chapter 35) requires that the Office of Management and Budget (OMB) provide interested Federal agencies and the public an early opportunity to comment on information collection requests. OMB may amend or waive the requirement for public consultation to the extent that public participation in the approval process would defeat the purpose of the information collection, violate State or Federal law, or substantially interfere with any agency's ability to perform its statutory obligations. The IC Clearance Official, Regulatory Information Management Services, Office of Management, publishes that notice containing proposed information collection requests prior to submission of these requests to OMB. Each proposed information collection, grouped by office, contains the following: (1) Type of review requested, e.g. new, revision, extension, existing or reinstatement; (2) Title; (3) Summary of the collection; (4) Description of the need for, and proposed use of, the information; (5) Respondents and frequency of collection; and (6) Reporting and/or Recordkeeping burden. OMB invites public comment. The Department of Education is especially interested in public comment addressing the following issues: (1) Is this collection necessary to the proper functions of the Department; (2) will this information be processed and used in a timely manner; (3) is the estimate of burden accurate; (4) how might the Department enhance the quality, utility, and clarity of the information to be collected; and (5) how might the Department minimize the burden of this collection on the respondents, including through the use of information technology.

Dated: January 28, 2008.

Angela C. Arrington,

IC Clearance Official, Regulatory Information Management Services, Office of Management.

Office of Special Education and Rehabilitative Services

Type of Review: New.

Title: Special Education—Individual Reporting on Regulatory Compliance Related To The Personnel Development Programs Service Obligation and the Government Performance Results Act (GPRA).

Frequency: On Occasion; Biennially.

Affected Public: Individuals or households, businesses or other for-profit, not-for-profit institutions, Federal Government, State, Local, or Tribal Gov't, SEAs or LEAs.

Reporting and Recordkeeping Hour Burden:

Responses: 1,500.

Burden Hours: 6,688.

Abstract: The data collection under this request is governed by Sections 304.23–304.30 of the June 5, 2006, regulations that implement Section 662(h) of the IDEA Amendments of 2004, which require that individuals who receive a scholarship through the Personnel Development Program funded under the Act subsequently provide special education and related services to children with disabilities for a period of two years for every year for which assistance was received. Scholarship recipients who do not satisfy the requirements of the regulations must repay all or part of the cost of assistance, in accordance with regulations issued by the Secretary. These regulations implement requirements governing, among other things, the service obligation for scholars, reporting requirements by grantees, and repayment of scholarships by scholars. In order for the federal government to ensure that the goals of the program are achieved, certain data collection, recordkeeping, and documentation are necessary. In addition, this data collection is governed by the Government Performance and Results Act (GPRA). GPRA requires Federal agencies to establish performance measures for all programs, and OSEP has established performance measures for the Personnel Development Program. Data collection, from scholars who have received scholarships under the Personnel Development Program, is necessary to evaluate these measures.

Requests for copies of the proposed information collection request may be accessed from *http://edicsweb.ed.gov,* by selecting the ''Browse Pending Collections'' link and by clicking on link number 3572. When you access the information collection, click on ''Download Attachments'' to view. Written requests for information should be addressed to U.S. Department of Education, 400 Maryland Avenue, SW., LBJ, Washington, DC 20202–4537. Requests may also be electronically mailed to *ICDocketMgr@ed.gov* or faxed to 202–401–0920. Please specify the complete title of the information collection when making your request.

Comments regarding burden and/or the collection activity requirements should be electronically mailed to *ICDocketMgr@ed.gov.* Individuals who use a telecommunications device for the deaf (TDD) may call the Federal Information Relay Service (FIRS) at 1–800–877–8339.

[FR Doc. 08–488 Filed 2–1–08; 8:45 am]

BILLING CODE 4000–01–M

DEPARTMENT OF EDUCATION

Notice of Proposed Information Collection Requests

AGENCY: Department of Education.

SUMMARY: The IC Clearance Official, Regulatory Information Management Services, Office of Management, invites comments on the proposed information collection requests as required by the Paperwork Reduction Act of 1995.

DATES: Interested persons are invited to submit comments on or before April 4, 2008.

SUPPLEMENTARY INFORMATION: Section 3506 of the Paperwork Reduction Act of 1995 (44 U.S.C. Chapter 35) requires that the Office of Management and Budget (OMB) provide interested Federal agencies and the public an early opportunity to comment on information collection requests. OMB may amend or waive the requirement for public consultation to the extent that public participation in the approval process would defeat the purpose of the information collection, violate State or Federal law, or substantially interfere with any agency's ability to perform its statutory obligations. The IC Clearance Official, Regulatory Information Management Services, Office of Management, publishes that notice containing proposed information collection requests prior to submission of these requests to OMB. Each proposed information collection, grouped by office, contains the following: (1) Type of review requested, e.g. new, revision, extension, existing or

reinstatement; (2) Title; (3) Summary of the collection; (4) Description of the need for, and proposed use of, the information; (5) Respondents and frequency of collection; and (6) Reporting and/or Recordkeeping burden. OMB invites public comment.

The Department of Education is especially interested in public comment addressing the following issues: (1) Is this collection necessary to the proper functions of the Department; (2) will this information be processed and used in a timely manner; (3) is the estimate of burden accurate; (4) how might the Department enhance the quality, utility, and clarity of the information to be collected; and (5) how might the Department minimize the burden of this collection on the respondents, including through the use of information technology.

Dated: January 29, 2008.

Angela C. Arrington,

IC Clearance Official, Regulatory Information Management Services, Office of Management.

Office of Postsecondary Education

Type of Review: Extension of a currently approved collection.

Title: Annual Student Activities Report for the Jacob K. Javits Fellowship Program.

Frequency: Annually.

Affected Public: Not-for-profit institutions.

Reporting and Recordkeeping Hour Burden:

Responses: 190.

Burden Hours: 570.

Abstract: This information collection provides the U.S. Department of Education with information needed to determine if fellows have made substantial progress toward meeting the program's objectives and allows program staff to monitor and evaluate time-to-degree completion and the graduation rate. The Congress has mandated (through the Government Performance and Results Act of 1993) that the U.S. Department of Education provide documentation about the progress being made by the program. Program staff have made minor adjustments to the report to improve the clarity of the document, and to ensure more effective data collection and evaluation of program performance. However, the current burden estimate of three hours per response remains the same, pending feedback from respondents after the approved Annual Student Activities Report is extended and implemented.

Requests for copies of the proposed information collection request may be accessed from *http://edicsweb.ed.gov*, by selecting the ''Browse Pending Collections'' link and by clicking on link number 3571. When you access the information collection, click on ''Download Attachments'' to view. Written requests for information should be addressed to U.S. Department of Education, 400 Maryland Avenue, SW., LBJ, Washington, DC 20202–4537. Requests may also be electronically mailed to *ICDocketMgr@ed.gov* or faxed to 202–401–0920. Please specify the complete title of the information collection when making your request.

Comments regarding burden and/or the collection activity requirements should be electronically mailed to *ICDocketMgr@ed.gov*. Individuals who use a telecommunications device for the deaf (TDD) may call the Federal Information Relay Service (FIRS) at 1–800–877–8339.

[FR Doc. E8–1958 Filed 2–1–08; 8:45 am]

BILLING CODE 4000–01–P

DEPARTMENT OF EDUCATION

Office of Elementary and Secondary Education Overview Information; Enhanced Assessment Instruments; Notice Inviting Applications for New Awards Using Fiscal Year (FY) 2007 Funds

Catalog of Federal Domestic Assistance (CFDA) Number: 84.368A.

DATES: *Applications Available:* Feburary 4, 2007.

Deadline for Transmittal of Applications: April 4, 2008.

Full Text of Announcement

I. Funding Opportunity Description

Purpose of Program: The purpose of this program is to enhance the quality of assessment instruments and systems used by States for measuring the achievement of all students.

Priorities: This competition includes four absolute priorities and three competitive preference priorities. In accordance with 34 CFR 75.105(b)(2)(iv), the absolute priorities are from section 6112 of the Elementary and Secondary Education Act of 1965, as amended (ESEA). The competitive preference priorities are from Appendix E to the notice of final requirements for optional State consolidated applications submitted under section 9302 of the ESEA, published in the **Federal Register** on May 22, 2002 (67 FR 35967).

Absolute Priorities: For FY 2007 funds, these priorities are absolute priorities. Under 34 CFR 75.105(c)(3) we consider only applications that meet one or more of these priorities.

These priorities are:

Absolute Priority 1. Collaborate with institutions of higher education, other research institutions, or other organizations to improve the quality, validity, and reliability of State academic assessments beyond the requirements for these assessments described in section 1111(b)(3) of the ESEA.

Absolute Priority 2. Measure student academic achievement using multiple measures of student academic achievement from multiple sources.

Absolute Priority 3. Chart student progress over time.

Absolute Priority 4. Evaluate student academic achievement through the development of comprehensive academic assessment instruments, such as performance and technology-based academic assessments.

Competitive Preference Priorities: Under 34 CFR 75.105(c)(2)(i) we award up to an additional 35 points to an application, depending on the extent to which an application meets competitive preference priorities.

For FY 2007 funds, these priorities are:

Competitive Preference Priority 1. Accommodations and alternate assessments (up to 20 points). Applications that can be expected to advance practice significantly in the area of increasing accessibility and validity of assessments for students with disabilities or limited English proficiency, or both, including strategies for test design, administration with accommodations, scoring, and reporting.

Competitive Preference Priority 2. Collaborative efforts (up to 10 points). Applications that are sponsored by a consortium of States.

Competitive Preference Priority 3. Dissemination (up to 5 points). Applications that include an effective plan for dissemination of results.

Note: The full text of the competitive preference priorities is included in the notice of final requirements published in the **Federal Register** on May 22, 2002 (67 FR 35967).

Program Authority: 20 U.S.C. 7301a and 7842.

Applicable Regulations: (a) The Education Department General Administrative Regulations (EDGAR) in 34 CFR parts 74, 75, 77, 80, 81, 82, 84, 85, 86, 97, 98, and 99. (b) The notice of final requirements published in the **Federal Register** on May 22, 2002 (67 FR 35967).

II. Award Information

Type of Award: Discretionary grants.

Estimated Available Funds: $7,500,000 in FY 2007 funds.

Estimated Range of Awards: $500,000–$2,000,000.

Estimated Average Size of Awards: $1,500,000.

Estimated Number of Awards: 5.

Note: The Department is not bound by any estimates in this notice.

Project Period: Up to 18 months.

III. Eligibility Information

1. *Eligible Applicants:* State educational agencies (SEAs) as defined in section 9101(41) of the ESEA and consortia of such SEAs.

2. *Cost Sharing or Matching:* This competition does not require cost sharing or matching.

3. *Other:* An application from a consortium of SEAs must designate one SEA as the fiscal agent.

IV. Application and Submission Information

1. *Address to Request Application Package:* You can access the electronic grant application for the Enhanced Assessment Grants Program at *http://www.Grants.gov.* You must search for the downloadable application package for this competition by the CFDA number. Do not include the CFDA number's alpha suffix in your search (e.g., search for 84.368, not 84.368A). You can also obtain a copy of the application package by contacting the program contact persons listed under *Agency Contact* in section VII of this notice.

Individuals with disabilities can obtain a copy of the application package in an alternative format (e.g., Braille, large print, audiotape, or computer diskette) by contacting the person or team listed under *Agency Contact* in section VII of this notice.

2. *Content and Form of Application Submission:* Requirements concerning the content of an application, together with the forms you must submit, are in the application package for this competition.

Page Limit: The application narrative (Part III of the application) is where you, the applicant, address the selection criteria that reviewers use to evaluate your application and the absolute and competitive preference priorities. You must limit Part III to the equivalent of no more than 40 pages, using the following standards:

- A ''page'' is 8.5″ x 11″, on one side only with 1″ margins at the top, bottom, and both sides.
- Double space (no more than three lines per vertical inch) all text in the application narrative, including titles, headings, footnotes, quotations, references, and captions, as well as all text in charts, tables, figures, and graphs.
- A font no smaller than 10.0 point for all text in the application narrative, including titles, headings, footnotes, quotations, references, and captions, as well as all text in charts, tables figures, and graphs. (Font sizes that round up to 10, such as 9.7 point, will be considered as smaller than 10.0.)

The page limit does not apply to the cover sheet, budget section (chart and narrative), assurances and certifications, response regarding research activities involving human subjects, GEPA 427 response, one-page abstract, personnel resumes, and letters of support; however, discussion of how the application meets the absolute priorities, how well the application meets the competitive preference priorities, and how well the application addresses each of the selection criteria must be included within the application narrative and therefore is subject to the page limit.

Our reviewers will not read any pages of your application that exceed the page limit if you apply these standards; or exceed the equivalent of the page limit if you apply other standards.

3. *Submission Dates and Times:*

Applications Available: February 4, 2008.

Deadline for Transmittal of Applications: April 4, 2008.

Applications for grants under this competition must be submitted electronically using the *Grants.gov* Apply site (*Grants.gov*). For information (including dates and times) about how to submit your application electronically, or in paper format by mail or hand delivery if you qualify for an exception to the electronic submission requirement, please refer to section IV.6. *Other Submission Requirements* in this notice.

We do not consider an application that does not comply with the deadline requirements.

Individuals with disabilities who need an accommodation or auxiliary aid in connection with the application process should contact the person listed under **FOR FURTHER INFORMATION CONTACT** in section VII in this notice. If the Department provides an accommodation or auxiliary aid to an individual with a disability in connection with the application process, the individual's application remains subject to all other requirements and limitations in this notice.

4. *Intergovernmental Review:* This competition is not subject to Executive Order 12372 and the regulations in 34 CFR part 79.

5. *Funding Restrictions:* We reference regulations outlining funding restrictions in the *Applicable Regulations* section in this notice.

6. *Other Submission Requirements:* Applications for grants under this competition must be submitted electronically unless you qualify for an exception to this requirement in accordance with the instructions in this section. If duplicate applications are submitted, the last application submitted will be considered and not the application submitted earlier.

a. *Electronic Submission of Applications.*

Applications for grants under the Enhanced Assessment Grants Program, CFDA Number 84.368A, must be submitted electronically using the Governmentwide *Grants.gov* Apply site at *http://www.Grants.gov.* Through this site, you will be able to download a copy of the application package, complete it offline, and then upload and submit your application. You may not e-mail an electronic copy of a grant application to us.

We will reject your application if you submit it in paper format unless, as described elsewhere in this section, you qualify for one of the exceptions to the electronic submission requirement and submit, no later than two weeks before the application deadline date, a written statement to the Department that you qualify for one of these exceptions. Further information regarding calculation of the date that is two weeks before the application deadline date is provided later in this section under *Exception to Electronic Submission Requirement.*

Please note the following:

- When you enter the *Grants.gov* site, you will find information about submitting an application electronically through the site, as well as the hours of operation.
- Applications received by *Grants.gov* are date and time stamped. Your application must be fully uploaded and submitted and must be date and time stamped by the *Grants.gov* system no later than 4:30 p.m., Washington, DC time, on the application deadline date. Except as otherwise noted in this section, we will not consider your application if it is date and time stamped by the *Grants.gov* system later than 4:30 p.m., Washington, DC time, on the application deadline date. When we retrieve your application from *Grants.gov*, we will notify you if we are rejecting your application because it was date and time stamped by the *Grants.gov* system after 4:30 p.m.,

Washington, DC time, on the application deadline date.

• The amount of time it can take to upload an application will vary depending on a variety of factors, including the size of the application and the speed of your Internet connection. Therefore, we strongly recommend that you do not wait until the application deadline date to begin the submission process through *Grants.gov*.

• You should review and follow the Education Submission Procedures for submitting an application through *Grants.gov* that are included in the application package for this competition to ensure that you submit your application in a timely manner to the *Grants.gov* system. You can also find the Education Submission Procedures pertaining to *Grants.gov* at *http://e-Grants.ed.gov/help/GrantsgovSubmissionProcedures.pdf.*

• To submit your application via *Grants.gov*, you must complete all steps in the *Grants.gov* registration process (see *http://www.grants.gov/applicants/get_registered.jsp*). These steps include (1) registering your organization, a multi-part process that includes registration with the Central Contractor Registry (CCR); (2) registering yourself as an Authorized Organization Representative (AOR); and (3) getting authorized as an AOR by your organization. Details on these steps are outlined in the *Grants.gov* 3-Step Registration Guide (*see http://www.grants.gov/section910/Grants.govRegistrationBrochure.pdf*). You also must provide on your application the same D-U-N-S Number used with this registration. Please note that the registration process may take five or more business days to complete, and you must have completed all registration steps to allow you to submit successfully an application via *Grants.gov*. In addition you will need to update your CCR registration on an annual basis. This may take three or more business days to complete.

• You will not receive additional point value because you submit your application in electronic format, nor will we penalize you if you qualify for an exception to the electronic submission requirement, as described elsewhere in this section, and submit your application in paper format.

• You must submit all documents electronically, including all information you typically provide on the following forms: Application for Federal Assistance (SF 424), the Department of Education Supplemental Information for SF 424, Budget Information—Non-Construction Programs (ED 524), and all necessary assurances and certifications. Please note that two of these forms—the SF 424 and the Department of Education Supplemental Information for SF 424—have replaced the ED 424 (Application for Federal Education Assistance).

• You must attach any narrative sections of your application as files in a .DOC (document), .RTF (rich text), or .PDF (Portable Document) format. If you upload a file type other than the three file types specified in this paragraph or submit a password-protected file, we will not review that material.

• Your electronic application must comply with any page-limit requirements described in this notice.

• After you electronically submit your application, you will receive from *Grants.gov* an automatic notification of receipt that contains a *Grants.gov* tracking number. (This notification indicates receipt by *Grants.gov* only, not receipt by the Department.) The Department then will retrieve your application from *Grants.gov* and send a second notification to you by e-mail. This second notification indicates that the Department has received your application and has assigned your application a PR/Award number (an ED-specified identifying number unique to your application).

• We may request that you provide us original signatures on forms at a later date.

Application Deadline Date Extension in Case of Technical Issues with the Grants.gov System: If you are experiencing problems submitting your application through *Grants.gov*, please contact the *Grants.gov* Support Desk, toll free, at 1–800–518–4726. You must obtain a *Grants.gov* Support Desk Case Number and must keep a record of it.

If you are prevented from electronically submitting your application on the application deadline date because of technical problems with the *Grants.gov* system, we will grant you an extension until 4:30 p.m., Washington, DC time, the following business day to enable you to transmit your application electronically or by hand delivery. You also may mail your application by following the mailing instructions described elsewhere in this notice.

If you submit an application after 4:30 p.m., Washington, DC time, on the application deadline date, please contact the person listed under **FOR FURTHER INFORMATION CONTACT** in section VII in this notice and provide an explanation of the technical problem you experienced with *Grants.gov*, along with the *Grants.gov* Support Desk Case Number. We will accept your application if we can confirm that a technical problem occurred with the *Grants.gov* system and that that problem affected your ability to submit your application by 4:30 p.m., Washington, DC time, on the application deadline date. The Department will contact you after a determination is made on whether your application will be accepted.

Note: The extensions to which we refer in this section apply only to the unavailability of, or technical problems with, the *Grants.gov* system. We will not grant you an extension if you failed to fully register to submit your application to *Grants.gov* before the application deadline date and time or if the technical problem you experienced is unrelated to the *Grants.gov* system.

Exception to Electronic Submission Requirement: You qualify for an exception to the electronic submission requirement, and may submit your application in paper format, if you are unable to submit an application through the *Grants.gov* system because—

• You do not have access to the Internet; or

• You do not have the capacity to upload large documents to the *Grants.gov* system; and

• No later than two weeks before the application deadline date (14 calendar days or, if the fourteenth calendar day before the application deadline date falls on a Federal holiday, the next business day following the Federal holiday), you mail or fax a written statement to the Department, explaining which of the two grounds for an exception prevent you from using the Internet to submit your application.

If you mail your written statement to the Department, it must be postmarked no later than two weeks before the application deadline date. If you fax your written statement to the Department, we must receive the faxed statement no later than two weeks before the application deadline date.

Address and mail or fax your statement to: Gregory Dennis, U.S. Department of Education, 400 Maryland Avenue, SW., Room 3W243, Washington, DC 20202–6200. Fax: (202) 205–4921.

Your paper application must be submitted in accordance with the mail or hand delivery instructions described in this notice.

b. *Submission of Paper Applications by Mail.*

If you qualify for an exception to the electronic submission requirement, you may mail (through the U.S. Postal Service or a commercial carrier) your application to the Department. You must mail the original and two copies of your application, on or before the application deadline date, to the

Department at the applicable following address:

By mail through the U.S. Postal Service: U.S. Department of Education, Application Control Center, Attention: (CFDA Number 84.368A), 400 Maryland Avenue, SW., Washington, DC 20202–4260; or

By mail through a commercial carrier: U.S. Department of Education, Application Control Center, Stop 4260, Attention: (CFDA Number 84.368A), 7100 Old Landover Road, Landover, MD 20785–1506.

Regardless of which address you use, you must show proof of mailing consisting of one of the following:

(1) A legibly dated U.S. Postal Service postmark.

(2) A legible mail receipt with the date of mailing stamped by the U.S. Postal Service.

(3) A dated shipping label, invoice, or receipt from a commercial carrier.

(4) Any other proof of mailing acceptable to the Secretary of the U.S. Department of Education.

If you mail your application through the U.S. Postal Service, we do not accept either of the following as proof of mailing:

(1) A private metered postmark.

(2) A mail receipt that is not dated by the U.S. Postal Service.

If your application is postmarked after the application deadline date, we will not consider your application.

Note: The U.S. Postal Service does not uniformly provide a dated postmark. Before relying on this method, you should check with your local post office.

c. *Submission of Paper Applications by Hand Delivery.*

If you qualify for an exception to the electronic submission requirement, you (or a courier service) may deliver your paper application to the Department by hand. You must deliver the original and two copies of your application by hand, on or before the application deadline date, to the Department at the following address: U.S. Department of Education, Application Control Center, Attention: (CFDA Number 84.368A), 550 12th Street, SW., Room 7041, Potomac Center Plaza, Washington, DC 20202–4260.

The Application Control Center accepts hand deliveries daily between 8 a.m. and 4:30 p.m., Washington, DC time, except Saturdays, Sundays, and Federal holidays.

Note for Mail or Hand Delivery of Paper Applications: If you mail or hand deliver your application to the Department—

(1) You must indicate on the envelope and—if not provided by the Department—in Item 11 of the SF 424 the CFDA number, including suffix letter, if any, of the competition under which you are submitting your application; and

(2) The Application Control Center will mail to you a notification of receipt of your grant application. If you do not receive this notification within 15 business days from the application deadline date, you should call the U.S. Department of Education Application Control Center at (202) 245–6288.

V. Application Review Information

Selection Criteria: The selection criteria for this competition are from Appendix E to the notice of final requirements published in the **Federal Register** on May 22, 2002 (67 FR 35967) and are listed in the application package.

VI. Award Administration Information

1. *Award Notices:* If your application is successful, we notify your U.S. Representative and U.S. Senators and send you a Grant Award Notice (GAN). We may notify you informally, also.

If your application is not evaluated or not selected for funding, we notify you.

2. *Administrative and National Policy Requirements:* We identify administrative and national policy requirements in the application package and reference these and other requirements in the *Applicable Regulations* section in this notice.

We reference the regulations outlining the terms and conditions of an award in the *Applicable Regulations* section in this notice and include these and other specific conditions in the GAN. The GAN also incorporates your approved application as part of your binding commitments under the grant.

3. *Reporting:* At the end of your project period, you must submit a final performance report, including financial information, as directed by the Secretary. If you receive a multi-year award, you must submit an annual performance report that provides the most current performance and financial expenditure information as directed by the Secretary under 34 CFR 75.118. The Secretary may also require more frequent performance reports under 34 CFR 75.720(c). For specific requirements on reporting, please go to *http://www.ed.gov/fund/grant/apply/appforms/appforms.html.* Grantees will be expected to include in performance reports documentation of their success in addressing the performance measures identified in section 4 below. ED will provide grant recipients with the appropriate form and related instructions for addressing these reporting requirements. In addition, ED staff will contact grantees periodically for informal updates during the period of the grant.

4. *Performance Measures:* Under the Government Performance and Results Act of 1993 (GPRA), the Department has developed three measures for evaluating the effectiveness of the Enhanced Assessment Grants: (1) The number of States that participate in pilot activities described in each grant application; (2) the number of States that participate in Enhanced Assessment Grants projects funded by this competition; and (3) the number of presentations on grant activities made by grantees at national conferences sponsored by professional education organizations, the number of papers on grant activities submitted for publication in refereed journals, and the number of other products disseminated to the assessment community.

In addition, under GPRA, the Department has established the following measures to evaluate the overall effectiveness of the Enhanced Assessment Grants Program: (1) For each grant cycle and as determined by an expert panel, the percentage of Enhanced Assessment Grants that address program priorities by producing significant research regarding assessment systems, assessments, or related methodologies, products, or tools; (2) the percentage of grantees that twice during the period of their grants make available to SEA staff in non-participating States and to assessment researchers information on advancements in assessments resulting from the Enhanced Assessment Grants through presentations at national conferences, publications in refereed journals, or other products disseminated to the assessment community; and (3) for each grant cycle and as determined by an expert panel, the percentage of Enhanced Assessment Grants that yield significant research, methodologies, products, or tools specifically regarding accommodations and alternate assessments for students with disabilities and limited English proficient students.

VII. Agency Contact

For Further Information Contact: Valeria Ford or Collette Roney, Office of Elementary and Secondary Education, U.S. Department of Education, 400 Maryland Avenue, SW., Room 3W118, Washington, DC 20202–6132. Telephone: (202) 260–0934, or by e-mail: *Valeria.Ford@ed.gov* or *Collette.Roney@ed.gov.*

If you use a TDD, call the FRS, toll-free, at 1–800–877–8339.

VIII. Other Information

Alternative Format: Individuals with disabilities can obtain this document and a copy of the application package in an alternative format (e.g., Braille, large print, audiotape, or computer diskette)

on request to one of the program contact persons listed under *For Further Information Contact* in section VII in this notice.

Electronic Access to This Document: You can view this document, as well as all other documents of this Department published in the **Federal Register**, in text or Adobe Portable Document Format (PDF) on the Internet at the following site: *http://www.ed.gov/news/fedregister.*

To use PDF you must have Adobe Acrobat Reader, which is available free at this site. If you have questions about using PDF, call the U.S. Government Printing Office (GPO), toll free, at 1–888–293–6498; or in the Washington, DC, area at (202) 512–1530.

Note: The official version of this document is the document published in the **Federal Register**. Free Internet access to the official edition of the **Federal Register** and the Code of Federal Regulations is available on GPO Access at: *http://www.gpoaccess.gov/nara/index.html.*

Dated: January 30, 2008.

Kerri L. Briggs,

Assistant Secretary for Elementary and Secondary Education.

[FR Doc. E8–1983 Filed 2–1–08; 8:45 am]

BILLING CODE 4000–01–P

DEPARTMENT OF EDUCATION

Office of Special Education and Rehabilitative Services; Overview Information; Vocational Rehabilitation Services Projects for American Indians With Disabilities; Notice Inviting Applications for New Awards for Fiscal Year

Catalog of Federal Domestic Assistance (CFDA) Number: 84.250D.

DATES:

Applications Available: February 11, 2008.

Deadline for Transmittal of Applications: May 5, 2008.

Eligible Applicants: The governing bodies of Indian tribes (and consortia of those governing bodies) located on Federal and State reservations.

Estimated Available Funds: $11,000,000.

Estimated Range of Awards: $350,000–$1,000,000.

Maximum Award: For applicants that are current grantees under the Vocational Rehabilitation Services Projects for American Indians with Disabilities program (i.e., applicants that received funding in FY 2007), the maximum award amount for the first project year is the greater of (a) $365,000 or (b) an amount equal to 102.8 percent of the applicant's approved budget for the applicant's FY 2007 grant (an increase of 2.8 percent). For applicants that are not current grantees under the Vocational Rehabilitation Services Projects for American Indians with Disabilities program, the maximum award amount for the first project year is $360,000.

In addition, the Secretary may limit any proposed increases in funding for project years two through five to the annual estimated percentage change in the Consumer Price Index for all Urban Consumers (CPIU). The estimated percentage increase in the CPIU over the prior year for project year two (FY 2009) is approximately 3 percent and for project years three through five (FY 2010–FY 2012) is approximately 2.3 percent.

Estimated Number of Awards: 21–22.

Note: The Department is not bound by any estimates in this notice.

Project Period: Up to 60 months.

Full Text of Announcement

I. Funding Opportunity Description

Purpose of Program: The purpose of this program is to provide vocational rehabilitation (VR) services to American Indians with disabilities who reside on or near Federal or State reservations, consistent with their individual strengths, resources, priorities, concerns, abilities, capabilities, and informed choice, so that they may prepare for and engage in gainful employment, including self-employment, telecommuting, or business ownership.

Priority: In accordance with 34 CFR 75.105(b)(2)(iv), this priority is from section 121(b)(4) of the Rehabilitation Act of 1973, as amended (29 U.S.C. 741).

Competitive Preference Priority: For FY 2008, this priority is a competitive preference priority. Under 34 CFR 75.105(c)(2)(i), we award up to an additional 10 points to an application, depending on how well the application meets this priority.

This priority is: *Continuation of Previously-Funded Tribal Programs*

In making new awards under this program, we give priority consideration to applications for the continuation of tribal programs that have been funded under this program.

Program Authority: 29 U.S.C. 741.

Applicable Regulations: (a) The Education Department General Administrative Regulations (EDGAR) in 34 CFR parts 75, 77, 80, 81, 82, 84, 85, and 97. (b) The regulations in 34 CFR parts 369 and 371.

II. Award Information

Type of Award: Discretionary grants.

Estimated Available Funds: $11,000,000.

Estimated Range of Awards: $350,000–$1,000,000.

Maximum Award: For applicants that are current grantees under the Vocational Rehabilitation Services Projects for American Indians with Disabilities program (i.e., applicants that received funding in FY 2007), the maximum award amount for the first project year is the greater of (a) $365,000 or (b) an amount equal to 102.8 percent of the applicant's approved budget for the applicant's FY 2007 grant (an increase of 2.8 percent). For applicants that are not current grantees under the Vocational Rehabilitation Services Projects for American Indians with Disabilities program, the maximum award amount for the first project year is $360,000.

In addition, the Secretary may limit any proposed increases in funding for project years two through five to the annual estimated percentage change in the CPIU. The estimated percentage increase in the CPIU over the prior year for project year two (FY 2009) is approximately 3 percent and for project years three through five (FY 2010–FY 2012) is approximately 2.3 percent.

Estimated Number of Awards: 21–22.

Note: The Department is not bound by any estimates in this notice.

Project Period: Up to 60 months.

III. Eligibility Information

1. *Eligible Applicants:* The governing bodies of Indian tribes (and consortia of those governing bodies) located on Federal and State reservations.

2. *Cost Sharing or Matching:* See 34 CFR 371.40.

IV. Application and Submission Information

1. *Address to Request Application Package:* Education Publications Center (ED Pubs), P.O. Box 1398, Jessup, MD 20794–1398. Telephone, toll free: 1–877–433–7827. Fax: (301) 470–1244. If you use a telecommunications device for the deaf (TDD), call, toll free: 1–877–576–7734.

You can contact ED Pubs at its Web site, also: *http://www.ed.gov/pubs/edpubs.html* or at its e-mail address: *edpubs@inet.ed.gov.*

If you request an application package from ED Pubs, be sure to identify this competition as follows: CFDA number 84.250D.

Individuals with disabilities can obtain a copy of the application package in an alternative format (e.g., Braille,

large print, audiotape, or computer diskette) by contacting the person or team listed under *Alternative Format* in section VIII of this notice.

2. *Content and Form of Application Submission:* Requirements concerning the content of an application, together with the forms you must submit, are in the application package for this competition.

3. *Submission Dates and Times:*

Applications Available: February 11, 2008.

Deadline for Transmittal of Applications: May 5, 2008.

Applications for grants under this competition may be submitted electronically using the *Grants.gov* Apply site (*Grants.gov*), or in paper format by mail or hand delivery. For information (including dates and times) about how to submit your application electronically, or in paper format by mail or hand delivery, please refer to section IV. 6. *Other Submission Requirements* in this notice.

We do not consider an application that does not comply with the deadline requirements.

Individuals with disabilities who need an accommodation or auxiliary aid in connection with the application process should contact the person listed under *For Further Information Contact* in section VII in this notice. If the Department provides an accommodation or auxiliary aid to an individual with a disability in connection with the application process, the individual's application remains subject to all other requirements and limitations in this notice.

4. *Intergovernmental Review:* This program is not subject to Executive Order 12372 and the regulations in 34 CFR part 79.

5. *Funding Restrictions:* We reference regulations outlining funding restrictions in the *Applicable Regulations* section in this notice.

6. *Other Submission Requirements:* Applications for grants under this competition may be submitted electronically or in paper format by mail or hand delivery.

a. *Electronic Submission of Applications.*

To comply with the President's Management Agenda, we are participating as a partner in the Governmentwide *Grants.gov* Apply site. The Vocational Rehabilitation Services Projects for American Indians with Disabilities, CFDA Number 84.250D, is included in this project. We request your participation in *Grants.gov*.

If you choose to submit your application electronically, you must use the Governmentwide *Grants.gov* Apply site at *http://www.Grants.gov*. Through this site, you will be able to download a copy of the application package, complete it offline, and then upload and submit your application. You may not e-mail an electronic copy of a grant application to us.

You may access the electronic grant application for Vocational Rehabilitation Services Projects for American Indians With Disabilities at *http://www.Grants.gov*. You must search for the downloadable application package for this competition by the CFDA number. Do not include the CFDA number's alpha suffix in your search (e.g., search for 84.250, not 84.250D).

Please note the following:

- Your participation in *Grants.gov* is voluntary.
- When you enter the *Grants.gov* site, you will find information about submitting an application electronically through the site, as well as the hours of operation.
- Applications received by *Grants.gov* are date and time stamped. Your application must be fully uploaded and submitted and must be date and time stamped by the *Grants.gov* system no later than 4:30 p.m., Washington, DC time, on the application deadline date. Except as otherwise noted in this section, we will not consider your application if it is date and time stamped by the *Grants.gov* system later than 4:30 p.m., Washington, DC time, on the application deadline date. When we retrieve your application from *Grants.gov*, we will notify you if we are rejecting your application because it was date and time stamped by the *Grants.gov* system after 4:30 p.m., Washington, DC time, on the application deadline date.
- The amount of time it can take to upload an application will vary depending on a variety of factors, including the size of the application and the speed of your Internet connection. Therefore, we strongly recommend that you do not wait until the application deadline date to begin the submission process through *Grants.gov*.
- You should review and follow the Education Submission Procedures for submitting an application through *Grants.gov* that are included in the application package for this competition to ensure that you submit your application in a timely manner to the *Grants.gov* system. You can also find the Education Submission Procedures pertaining to *Grants.gov* at *http://e-Grants.ed.gov/help/GrantsgovSubmissionProcedures.pdf* .
- To submit your application via *Grants.gov*, you must complete all steps in the *Grants.gov* registration process (see *http://www.grants.gov/applicants/get_registered.jsp*). These steps include (1) registering your organization, a multi-part process that includes registration with the Central Contractor Registry (CCR); (2) registering yourself as an Authorized Organization Representative (AOR); and (3) getting authorized as an AOR by your organization. Details on these steps are outlined in the *Grants.gov* 3-Step Registration Guide (see *http://www.grants.gov/section910/Grants.govRegistrationBrochure.pdf*). You also must provide on your application the same D–U–N–S Number used with this registration. Please note that the registration process may take five or more business days to complete, and you must have completed all registration steps to allow you to submit successfully an application via *Grants.gov*. In addition you will need to update your CCR registration on an annual basis. This may take three or more business days to complete.
- You will not receive additional point value because you submit your application in electronic format, nor will we penalize you if you submit your application in paper format.
- If you submit your application electronically, you must submit all documents electronically, including all information you typically provide on the following forms: Application for Federal Assistance (SF 424), the Department of Education Supplemental Information for SF 424, Budget Information—Non-Construction Programs (ED 524), and all necessary assurances and certifications. Please note that two of these forms—the SF 424 and the Department of Education Supplemental Information for SF 424—have replaced the ED 424 (Application for Federal Education Assistance).
- If you submit your application electronically, you must attach any narrative sections of your application as files in a .DOC (document), .RTF (rich text), or .PDF (Portable Document) format. If you upload a file type other than the three file types specified in this paragraph or submit a password-protected file, we will not review that material.
- Your electronic application must comply with any page-limit requirements described in this notice.
- After you electronically submit your application, you will receive from *Grants.gov* an automatic notification of receipt that contains a *Grants.gov* tracking number. (This notification indicates receipt by *Grants.gov* only, not

receipt by the Department.) The Department then will retrieve your application from *Grants.gov* and send a second notification to you by e-mail. This second notification indicates that the Department has received your application and has assigned your application a PR/Award number (an ED-specified identifying number unique to your application).

• We may request that you provide us original signatures on forms at a later date.

Application Deadline Date Extension in Case of Technical Issues with the Grants.gov System: If you are experiencing problems submitting your application through *Grants.gov*, please contact the *Grants.gov* Support Desk, toll free, at 1–800–518–4726. You must obtain a *Grants.gov* Support Desk Case Number and must keep a record of it.

If you are prevented from electronically submitting your application on the application deadline date because of technical problems with the *Grants.gov* system, we will grant you an extension until 4:30 p.m., Washington, DC time, the following business day to enable you to transmit your application electronically or by hand delivery. You also may mail your application by following the mailing instructions described elsewhere in this notice.

If you submit an application after 4:30 p.m., Washington, DC time, on the application deadline date, please contact the person listed under *For Further Information Contact* in section VII in this notice and provide an explanation of the technical problem you experienced with *Grants.gov*, along with the *Grants.gov* Support Desk Case Number. We will accept your application if we can confirm that a technical problem occurred with the *Grants.gov* system and that that problem affected your ability to submit your application by 4:30 p.m., Washington, DC time, on the application deadline date. The Department will contact you after a determination is made on whether your application will be accepted.

Note: The extensions to which we refer in this section apply only to the unavailability of, or technical problems with, the *Grants.gov* system. We will not grant you an extension if you failed to fully register to submit your application to *Grants.gov* before the application deadline date and time or if the technical problem you experienced is unrelated to the *Grants.gov* system.

b. *Submission of Paper Applications by Mail.*

If you submit your application in paper format by mail (through the U.S. Postal Service or a commercial carrier), you must mail the original and two copies of your application, on or before the application deadline date, to the Department at the applicable following address:

By mail through the U.S. Postal Service:
U.S. Department of Education,
Application Control Center,
Attention: (CFDA Number 84.250D),
400 Maryland Avenue, SW.,
Washington, DC 20202–4260
or
By mail through a commercial carrier:
U.S. Department of Education,
Application Control Center, Stop 4260, Attention: (CFDA Number 84.250D), 7100 Old Landover Road, Landover, MD 20785–1506.

Regardless of which address you use, you must show proof of mailing consisting of one of the following:

(1) A legibly dated U.S. Postal Service postmark.

(2) A legible mail receipt with the date of mailing stamped by the U.S. Postal Service.

(3) A dated shipping label, invoice, or receipt from a commercial carrier.

(4) Any other proof of mailing acceptable to the Secretary of the U.S. Department of Education.

If you mail your application through the U.S. Postal Service, we do not accept either of the following as proof of mailing:

(1) A private metered postmark.

(2) A mail receipt that is not dated by the U.S. Postal Service.

If your application is postmarked after the application deadline date, we will not consider your application.

Note: The U.S. Postal Service does not uniformly provide a dated postmark. Before relying on this method, you should check with your local post office.

c. *Submission of Paper Applications by Hand Delivery.*

If you submit your application in paper format by hand delivery, you (or a courier service) must deliver the original and two copies of your application by hand, on or before the application deadline date, to the Department at the following address: U.S. Department of Education, Application Control Center, Attention: (CFDA Number 84.250D), 550 12th Street, SW., Room 7041, Potomac Center Plaza, Washington, DC 20202–4260.

The Application Control Center accepts hand deliveries daily between 8 a.m. and 4:30 p.m., Washington, DC time, except Saturdays, Sundays, and Federal holidays.

Note for Mail or Hand Delivery of Paper Applications: If you mail or hand deliver your application to the Department—

(1) You must indicate on the envelope and—if not provided by the Department—in Item 11 of the SF 424 the CFDA number, including suffix letter, if any, of the competition under which you are submitting your application; and

(2) The Application Control Center will mail to you a notification of receipt of your grant application. If you do not receive this notification within 15 business days from the application deadline date, you should call the U.S. Department of Education Application Control Center at (202) 245–6288.

V. Application Review Information

Selection Criteria: The selection criteria for this competition are from 34 CFR 75.210 of EDGAR and are in the application package. The selection criteria may total 100 points, plus the 10 competitive preference priority points (see section I. *Competitive Preference Priority*).

VI. Award Administration Information

1. *Award Notices:* If your application is successful, we notify your U.S. Representative and U.S. Senators and send you a Grant Award Notification (GAN). We may notify you informally, also.

If your application is not evaluated or not selected for funding, we notify you.

2. *Administrative and National Policy Requirements:*

We identify administrative and national policy requirements in the application package and reference these and other requirements in the *Applicable Regulations* section in this notice.

We reference the regulations outlining the terms and conditions of an award in the *Applicable Regulations* section in this notice and include these and other specific conditions in the GAN. The GAN also incorporates your approved application as part of your binding commitments under the grant.

3. *Reporting:* At the end of your project period, you must submit a final performance report, including financial information, as directed by the Secretary. If you receive a multi-year award, you must submit an annual performance report that provides the most current performance and financial expenditure information as directed by the Secretary under 34 CFR 75.118. The Secretary also may require more frequent performance reports under 34 CFR 75.720(c). For specific requirements on reporting, please go to *http://www.ed.gov/fund/grant/apply/appforms/appforms.html*.

4. *Performance Measures:* Under the Government Performance and Results

Act of 1993 (GPRA), the Department has established three performance measures for the Vocational Rehabilitation Services Projects for American Indians with Disabilities program. The measures are (1) the percentage of individuals who leave the program with an employment outcome, (2) the percentage of projects that demonstrate an average annual cost per employment outcome of no more than $35,000, and (3) the percentage of projects that demonstrate an average annual cost per participant of no more than $10,000. Each grantee must annually report its performance on these measures through the Annual Progress Reporting Form for the American Indian Vocational Rehabilitation Services (AIVRS) Program.

In addition, this program is part of the Administration's job training and employment common measures initiative. The common measures for job training and employment programs targeting adults are—entered employment (percentage employed in the first quarter after program exit); retention in employment (percentage of those employed in the first quarter after exit that were still employed in the second and third quarter after program exit); earnings increase (percentage change in earnings pre-registration to post-program and first quarter after exit to third quarter after exit); and efficiency measure (annual cost per employment outcome and per participant). The Department is currently working toward implementing these common measures. Each grantee will be required to collect and report data for the common measures when implemented.

VII. Agency Contact

For Further Information Contact: August Martin, U.S. Department of Education, 400 Maryland Avenue, SW., Room 5088, Potomac Center Plaza (PCP), Washington, DC 20204–2800. Telephone: (202) 245–7410.

If you use a TDD, call the FRS, toll free, at 1–800–877–8339.

VIII. Other Information

Alternative Format: Individuals with disabilities can obtain this document and a copy of the application package in an alternative format (e.g., Braille, large print, audiotape, or computer diskette) by contacting the Grants and Contracts Services Team, U.S. Department of Education, 400 Maryland Avenue, SW., Room 5075, PCP, Washington, DC 20202–2550. Telephone: (202) 245–7363. If you use a TDD, call the FRS, toll free, at 1–800–877–8339.

Electronic Access to This Document: You can view this document, as well as all other documents of this Department published in the **Federal Register**, in text or Adobe Portable Document Format (PDF) on the Internet at the following site: *http://www.ed.gov/news/fedregister*.

To use PDF you must have Adobe Acrobat Reader, which is available free at this site. If you have questions about using PDF, call the U.S. Government Printing Office (GPO), toll free, at 1–888–293–6498; or in the Washington, DC, area at (202) 512–1530.

Note: The official version of this document is the document published in the **Federal Register**. Free Internet access to the official edition of the **Federal Register** and the Code of Federal Regulations is available on GPO Access at: *http://www.gpoaccess.gov/nara/index.html*.

Dated: January 30, 2008.

Tracy R. Justesen,

Assistant Secretary for Special Education and Rehabilitative Services.

[FR Doc. E8–1982 Filed 2–1–08; 8:45 am]

BILLING CODE 4000–01–P

ELECTION ASSISTANCE COMMISSION

Agency Information Collection Activities: Proposed Collection; Comment Request; EAC's Voting System Test Laboratory Accreditation Program Manual

AGENCY: U.S. Election Assistance Commission (EAC).

ACTION: Notice; comment request.

SUMMARY: The EAC, as part of its continuing effort to reduce paperwork and respondent burden in accordance with the Paperwork Reduction Act of 1995, invites the general public and other Federal agencies to take this opportunity to comment on a proposed information collection, EAC's Voting System Test Laboratory Accreditation Program Manual. Comments are invited on: (a) Whether the proposed collection of information is necessary for the proper performance of the functions of the agency, including whether the information shall have practical utility; (b) the accuracy of the agency's estimate of the burden of the proposed information collection, including the validity of the methodology and assumptions used; (c) ways to enhance the quality, utility, and clarity of the information to be collected; and (d) ways to minimize the burden of the information collection on respondents. Comments submitted in response to this notice will be summarized and included in the request for approval of this information collection by the Office of Management and budget; they also will become a matter of public record. This notice requests comments solely on the four criteria above. A separate notice will be published on the Federal Register to request substantive comments on the proposed information collection; please refer to the EAC's Web site, *http://www.eac.gov,* for further information regarding the submission of substantive comments.

DATES: Written comments must be submitted on or before 5 p.m. EDT on April 4, 2008.

ADDRESSES: Comments and recommendations on the proposed information collection must be submitted in writing through either: (1) Electronically to *pracomments@eac.gov.* or (2) U.S. postal mail to the U.S. Election Assistance Commission, 1225 New York Avenue, NW., Suite 1100, Washington, DC 20005, *Attn:* Laiza N. Otero, Election Research Specialist. To ensure receipt and proper handling, comments submitted via U.S. postal mail shall clearly indicate that they are in response to this **Federal Register** notice by writing ''Paperwork Reduction Act'' in the heading section of the letter.

FOR FURTHER INFORMATION CONTACT: To request more information on this proposed information collection or to obtain a copy of the EAC's Voting System Test Laboratory Accreditation Program Manual, please, write to the above address or contact Laiza N. Otero, Election Research Specialist, at (202) 566–3100. You may also view the proposed collection instrument by visiting the EAC's Web site at *http://www.eac.gov.*

SUPPLEMENTARY INFORMATION:

Title: Voting System Test Laboratory Accreditation Program Manual.

OMB Number: Pending.

Type of Review: Regular submission.

Needs and Uses: Section 231(b) of the Help America Vote Act (HAVA) of 2002 (42 U.S.C. 15371(b)) requires that the EAC provide for the accreditation and revocation of accreditation of independent, non-federal laboratories qualified to test voting systems to Federal standards. Generally, the EAC considers for accreditation those laboratories evaluated and recommended by the National Institute of Standards and Technology (NIST) pursuant to HAVA Section 231(b)(1). However, consistent with HAVA Section 231(b)(2)(B), the Commission may also vote to accredit laboratories outside of those recommended by NIST upon publication of an explanation of the reason for any such accreditation. In

order to meet its statutory requirements under HAVA Section 15371(b), the EAC has developed the EAC's Voting System Test Laboratory Accreditation Program. The procedural requirements of the program are established in the proposed information collection, the EAC *Voting System Test Laboratory Accreditation Program Manual.* Although participation in the program in voluntary, adherence to the program's procedural requirements is mandatory for participants. The procedural requirements of this Manual will supersede any prior laboratory accreditation requirements issued by the EAC. This manual shall be read in conjunction with the EAC's *Voting System Testing and Certification Program Manual* (OMB 3265–0004).

Affected Public: Voting system test laboratories.

Estimated Number of Respondents: 8.

Total Annual Responses: 8.

Estimated Total Annual Burden Hours: 200 hours.

Thomas R. Wilkey,

Executive Director, U.S. Election Assistance Commission.

[FR Doc. 08–453 Filed 2–1–08; 8:45 am]

BILLING CODE 6820–KF–M

ELECTION ASSISTANCE COMMISSION

Request for Substantive Comments; EAC's Voting System Test Laboratory Accreditation Program Manual

AGENCY: United States Election Assistance Commission (EAC).

ACTION: Notice; request for substantive comments.

SUMMARY: The EAC has drafted a procedural manual for its Voting System Test Laboratory Accreditation Program. This manual establishes the administrative procedures for obtaining an EAC accreditation for Voting System Test Laboratories (VSTL). Section 231(b) of the Help America Vote Act (HAVA) of 2002 (42 U.S.C. 15371(b)) requires that the EAC provide for the accreditation and revocation of accreditation of independent, non-federal laboratories qualified to test voting systems to Federal standards. In order to meet its statutory requirements under HAVA 15371(b), the EAC has developed the EAC's Voting System Test Laboratory Accreditation Program. Although participation in the program is voluntary, adherence to the program's procedural requirements is mandatory for participants. The procedural requirements of this Manual will supersede any prior laboratory accreditation requirements issued by the EAC. This manual shall be read in conjunction with the EAC's *Voting System Testing and Certification Program Manual* (OMB 3265–0004). The purpose of this notice is to request public comment on the substantive aspects of the program.

Substantive Comments: The EAC seeks substantive comments from the public on its proposed procedural manual. Please submit comments consistent with the information below. Comments should identify and cite the section of the manual at issue. Where a substantive issue is raised, please propose a recommended change or alternative policy. All comments submitted will be published at the end of the comment period on the EAC's Web site *http://www.eac.gov.* This publication and request for comment is not required under the rulemaking, adjudicative, or licensing provisions of the Administrative Procedures Act (APA). It is a voluntary effort by the EAC to gather input from the public on the EAC's administrative procedures for accrediting Voting System Test Laboratories. Furthermore, this request by the EAC for public comment is not intended to make any of the APA's rulemaking provisions applicable to development of this or future EAC procedural programs. However, in accordance with the Paperwork Reduction Act of 1995, a separate notice will be published on the **Federal Register** to request comments regarding the burden of responding to the information collection activities of the proposed manual; please refer to the EAC's Web site, *http://www.eac.gov,* for further information about the submission of comments regarding burden.

DATES: Submit written or electronic comments on this draft procedural manual on or before 5 p.m. EDT on April 4, 2008.

ADDRESSES: Submit comments via e-mail to *testlaboratoryaccreditation@eac.gov;* via mail to Brian Hancock, Director of Voting System Certification, U.S. Election Assistance Commission, 1225 New York Avenue, Suite 1100, Washington, DC 20005; or via fax to 202–566–1392. An electronic copy of the proposed guidance may be found on the EAC's Web site *http://www.eac.gov.*

FOR FURTHER INFORMATION CONTACT: Matthew Masterson, Testing and Certification Program Associate, 1225 New York Avenue, Suite 1100, Washington, DC, (202) 566–3100, *Fax:* (202) 566–1392.

Thomas R. Wilkey,

Executive Director, U.S. Election Assistance Commission.

[FR Doc. 08–452 Filed 2–1–08; 8:45 am]

BILLING CODE 6820–KF–M

DEPARTMENT OF ENERGY

Federal Energy Regulatory Commission

[Docket No. CP08–36–000]

Chestnut Ridge Storage L.P.; Notice of Intent To Prepare an Environmental Assessment for the Proposed Junction Natural Gas Storage Project and Request for Comments on Environmental Issues

January 28, 2008.

The staff of the Federal Energy Regulatory Commission (FERC or Commission) will prepare an environmental assessment (EA) that will discuss the environmental impacts of the Junction Natural Gas Storage Project involving construction and operation of natural gas storage and pipeline header facilities by Chestnut Ridge Storage L.P. (Chestnut Ridge) in Fayette County, Pennsylvania and Preston and Monongolia Counties, West Virginia. The EA will be used by the Commission in its decision-making process to determine whether the project is in the public convenience and necessity.

This notice announces the opening of the scoping process the Commission will use to gather input from the public and interested agencies on the project. Your input will help determine which issues need to be evaluated in the EA. Please note that the scoping period will close on February 29, 2008. Details on how to submit comments are provided in the Public Participation section of this notice.

This notice is being sent to affected landowners; federal, state, and local government agencies; elected officials; Native American tribes; other interested parties; and local libraries and newspapers. State and local government representatives are asked to notify their constituents of this proposed project and to encourage them to comment on their areas of concern.

A fact sheet prepared by the FERC entitled ''An Interstate Natural Gas Facility On My Land? What Do I Need To Know?'' addresses a number of typically asked questions, including the use of eminent domain and how to participate in the Commission's proceedings. It is available for viewing

on the FERC Internet Web site (*http://www.ferc.gov*).

Summary of the Proposed Project

Chestnut Ridge proposes to convert an existing, depleted natural gas production field—the West Summit Field, which extends from Fayette County, Pennsylvania into Preston and Monongolia Counties, West Virginia—into a high deliverability, multi-cycle gas storage facility with up to 25 billion cubic feet of working gas capacity and up to 500,000 dekatherms per day of injection and withdrawal capacity. Proposed construction would include:

- Recompletion/drilling of up to 26 injection/withdrawal wells and up to 11 observation wells;
- Construction of approximately 17 miles of gathering laterals from the individual wells to a new compressor station;
- Construction of an approximate 25,000 horsepower compressor station;
- Construction of a 1,900 foot 24-inch pipeline header connecting to a Columbia Gas pipeline;
- Construction of a 21.5-mile 24-inch pipeline header connecting to the Dominion Transmission, Inc./Texas Eastern interstate pipeline; and
- Construction of appurtenant facilities consisting of tap valves, pig launcher and receivers, meter and regulator stations, separation and control systems, and access roads.

The general location of the proposed facilities is shown in Appendix 1.[1]

Land Requirements for Construction

The project would affect approximately 545 acres, 251 acres of which would be permanently converted for project use. Additionally, Chestnut Ridge is in the process of acquiring storage rights for an additional 2,000 foot buffer zone surrounding the currently defined boundaries of the West Summit Field. Construction of pipeline facilities would affect approximately 415 acres, with 197 acres required for operation, 98.5 percent of which would permanently convert forested lands for project use. For its aboveground facilities—the wells sites, the compressor station, appurtenant facilities, and access roads—130 acres would be affected during construction and 53.7 acres during operation, 58 percent of which would permanently convert forested lands for project use.

The EA Process

We[2] are preparing this EA to comply with the National Environmental Policy Act (NEPA) which requires the Commission to take into account the environmental impact that could result if it authorizes Chestnut Ridge's proposal. By this notice, we are also asking federal, state, and local agencies with jurisdiction and/or special expertise with respect to environmental issues to formally cooperate with us in the preparation of the EA. Agencies that would like to request cooperating status should follow the instructions for filing comments provided below.

NEPA also requires the FERC to discover and address concerns the public may have about proposals. This process is referred to as ''scoping.'' The main goal of the scoping process is to focus the analysis in the EA on the important environmental issues. By this Notice of Intent, we are requesting public comments on the scope of the issues to address in the EA. All comments received will be considered during the preparation of the EA.

The EA will discuss impacts that could occur as a result of the construction and operation of the proposed project under these general headings:

- Geology and soils.
- Water resources.
- Land use and visual quality.
- Cultural resources.
- Vegetation and wildlife (including threatened and endangered species).
- Air quality and noise.
- Reliability and safety.

We will also evaluate possible alternatives to the proposed project or portions of the project, where necessary, and make recommendations on how to lessen or avoid impacts on the various resource areas.

Our independent analysis of the issues will be in the EA. Depending on the comments received during the scoping process, the EA may be published and mailed to federal, state, and local agencies, public interest groups, interested individuals, affected landowners, newspapers, libraries, and the Commission's official service list for this proceeding. A comment period will be allotted for review if the EA is published. We will consider all comments on the EA before we make our recommendations to the Commission.

To ensure your comments are received and considered, please carefully follow the instructions in the Public Participation section below.

Public Participation

You can make a difference by providing us with your specific comments or concerns about the project. By becoming a commentor, your concerns will be addressed in the EA and considered by the Commission. You should focus on the potential environmental effects of the proposal and alternatives to the proposal, including alternative compressor station sites and measures to avoid or lessen environmental impact. The more specific your comments, the more useful they will be. Please carefully follow these instructions to ensure that your comments are received in time and properly recorded:

- Send an original and two copies of your letter to: Kimberley D. Bose, Secretary, Federal Energy Regulatory Commission, 888 First St., NE., Room 1A, Washington, DC 20426;
- Label one copy of the comments for the attention of Gas Branch 3, PJ–11.3;
- Reference Docket No. CP08–36–000; and
- Mail your comments so that they will be received in Washington, DC on or before February 29, 2008.

The Commission encourages electronic filing of comments. See 18 Code of Federal Regulations 385.2001(a)(1)(iii) and the instructions on the Commission's Internet Web site at *http://www.ferc.gov* under the ''eFiling'' link and the link to the User's Guide. Prepare your submission in the same manner as you would if filing on paper and save it to a file on your hard drive. Before you can file comments you will need to create an account by clicking on ''Login to File'' and then ''New User Account.'' You will be asked to select the type of filing you are making. This filing is considered a ''Comment on Filing.''

As described above, we may publish and distribute the EA for comment. If you are interested in receiving an EA for review and/or comment, please return the Environmental Mailing List Form (Appendix 3). If you do not return the Environmental Mailing List Form, you will be taken off the mailing list.

Becoming an Intervenor

In addition to involvement in the EA scoping process, you may want to become an official party to the proceeding known as an ''intervenor.'' Intervenors play a more formal role in

[1] The appendices referenced in this notice are not being printed in the **Federal Register**. Copies of all appendices are available on the Commission's Web site at the ''eLibrary'' link or from the Commission's Public Reference Room, 888 First Street, NE., Washington, DC 20426, or call (202) 502–8371. For instructions on connecting to eLibrary refer to the ''Additional Information'' section of this notice. Copies of the appendices were sent to all those receiving this notice in the mail. Requests for detailed maps of the proposed facilities should be made directly to Chestnut Ridge.

[2] ''We,'' ''us,'' and ''our'' refer to the environmental staff of the FERC's Office of Energy Projects.

the process. Among other things, intervenors have the right to receive copies of case-related Commission documents and filings by other intervenors. Likewise, each intervenor must send one electronic copy (using the Commission's eFiling system) or 14 paper copies of its filings to the Secretary of the Commission and must send a copy of its filings to all other parties on the Commission's service list for this proceeding.

If you want to become an intervenor you must file a motion to intervene according to Rule 214 of the Commission's Rules of Practice and Procedure (18 CFR 385.214) (see Appendix 2).[3] Only intervenors have the right to seek rehearing of the Commission's decision.

Affected landowners and parties with environmental concerns may be granted intervenor status upon showing good cause by stating that they have a clear and direct interest in this proceeding which would not be adequately represented by any other parties. You do not need intervenor status to have your environmental comments considered.

Additional Information

Additional information about the project is available from the Commission's Office of External Affairs, at 1–866–208–FERC or on the FERC Internet Web site (*http://www.ferc.gov*) using the ''eLibrary'' link. Click on the eLibrary link, then on ''General Search'' and enter the docket number excluding the last three digits in the Docket Number field. Be sure you have selected an appropriate date range. For assistance, please contact FERC Online Support at *FercOnlineSupport@ferc.gov* or toll free at 1–866–208–3676, or for TTY, contact (202) 502–8659. The eLibrary link also provides access to the texts of formal documents issued by the Commission, such as orders, notices, and rulemakings.

In addition, the Commission now offers a free service called eSubscription which allows you to keep track of all formal issuances and submittals in specific dockets. This can reduce the amount of time you spend researching proceedings by automatically providing you with notification of these filings, document summaries and direct links to the documents. Go to *http://www.ferc.gov/esubscribenow.htm.*

Finally, public meetings or site visits will be posted on the Commission's calendar located at *http://www.ferc.gov/EventCalendar/EventsList.aspx* along with other related information.

Kimberly D. Bose,

Secretary.

[FR Doc. E8–1924 Filed 2–1–08; 8:45 am]

BILLING CODE 6717–01–P

[3] Interventions may also be filed electronically via the Internet in lieu of paper. See the previous discussion on filing comments electronically.

DEPARTMENT OF ENERGY

Federal Energy Regulatory Commission

[Docket Nos. CP07–191–001]

Port Dolphin Energy LLC; Notice of Amendment

January 28, 2008.

Take notice that on January 18, 2008, Port Dolphin Energy LLC (Port Dolphin), 400 North Tampa Street, Suite 1050, Tampa, Florida 33602, filed in Docket No. CP07–191–001 to amend its application, pursuant to section 7(c) of the Natural Gas Act and Part 157, Subpart A of the Commission's regulations, filed April 25, 2007 in Docket No. CP07–191–000 in order to reroute its proposed pipeline. Specifically, Port Dolphin now proposes to: (1) To construct, install, own, operate, and maintain a single-use, 3.93-mile natural gas pipeline and related facilities necessary to provide transportation from the proposed Port Dolphin Project, a deepwater port offshore of Tampa Bay, Florida, to interconnections with Gulfstream Natural Gas System, L.L.C. (Gulfstream) and TECO Energy, Inc. (TECO), with applicable waivers. The application is on file with the Commission and open to public inspection. The filing may also be viewed on the Web at *http://www.ferc.gov* using the ''eLibrary'' link. Enter the docket number excluding the last three digits in the docket number field to access the document. For assistance, call (866) 208–3767 or TYY, (202) 502–8659.

The Port Dolphin Pipeline will be a proprietary, single-use pipeline which will be dedicated solely to transporting re-gasified LNG from the Port Dolphin Project with a capacity up to 1,200 million standard cubic feet per day (MMscf/d). Port Dolphin states that it will operate the Port Dolphin port as a proprietary LNG receiving and re-gasification facility pursuant to the Deepwater Port Act of 1974. Accordingly, Port Dolphin filed an application to construct and operate the offshore portions of the Port Dolphin project with the Maritimes Administration and the U.S. Coast Guard (USCG) on March 29, 2007, as amended on December 7, 2007.

The USCG will serve as the lead agency responsible for developing and issuing an Environmental Impact Statement (EIS) for both the deepwater port and the associated onshore pipeline and related facilities referenced in this Notice. The FERC will act as a cooperating agency in developing the EIS. The filing of the final EIS in the Commission's public record for this proceeding will serve to notify federal and state agencies of the timing for the completion of all necessary reviews, and the subsequent need to complete all federal authorizations within 90 days of the date of issuance of the final EIS.

Any questions regarding this application should be directed to German Castro, Port Dolphin Energy LLC, 400 North Tampa Street, Suite 1050, Tampa, Florida 33602, phone (813) 514–1398.

There are two ways to become involved in the Commission's review of this project. First, any person wishing to obtain legal status by becoming a party to the proceedings for this project should, on or before the comment date stated below, file with the Federal Energy Regulatory Commission, 888 First Street NE., Washington, DC 20426, a motion to intervene in accordance with the requirements of the Commission's Rules of Practice and Procedure (18 CFR 385.214 or 385.211) and the Regulations under the NGA (18 CFR 157.10). A person obtaining party status will be placed on the service list maintained by the Secretary of the Commission and will receive copies of all documents filed by the applicant and by all other parties. A party must submit 14 copies of filings made with the Commission and must mail a copy to the applicant and to every other party in the proceeding. Only parties to the proceeding can ask for court review of Commission orders in the proceeding.

However, a person does not have to intervene in order to have comments considered. The second way to participate is by filing with the Secretary of the Commission, as soon as possible, an original and two copies of comments in support of or in opposition to this project. The Commission will consider these comments in determining the appropriate action to be taken, but the filing of a comment alone will not serve to make the filer a party to the proceeding. The Commission's rules require that persons filing comments in opposition to the project provide copies of their protests only to the party or parties directly involved in the protest.

The Commission may issue a preliminary determination on non-environmental issues prior to the

completion of its review of the environmental aspects of the project. This preliminary determination typically considers such issues as the need for the project and its economic effect on existing customers of the applicant, on other pipelines in the area, and on landowners and communities. For example, the Commission considers the extent to which the applicant may need to exercise eminent domain to obtain rights-of-way for the proposed project and balances that against the non-environmental benefits to be provided by the project. Therefore, if a person has comments on community and landowner impacts from this proposal, it is important either to file comments or to intervene as early in the process as possible.

Persons who wish to comment only on the environmental review of this project should submit an original and two copies of their comments to the Secretary of the Commission. Environmental commenters will be placed on the Commission's environmental mailing list, will receive copies of the environmental documents, and will be notified of meetings associated with the Commission's environmental review process. Environmental commenters will not be required to serve copies of filed documents on all other parties. However, the non-party commenters will not receive copies of all documents filed by other parties or issued by the Commission (except for the mailing of environmental documents issued by the Commission) and will not have the right to seek court review of the Commission's final order.

The Commission strongly encourages electronic filings of comments, protests and interventions in lieu of paper using the ''eFiling'' link at *http://www.ferc.gov*. Persons unable to file electronically should submit an original and 14 copies of the protest or intervention to the Federal Energy Regulatory Commission, 888 First Street, NE., Washington, DC 20426.

This filing is accessible on-line at *http://www.ferc.gov*, using the ''eLibrary'' link and is available for review in the Commission's Public Reference Room in Washington, DC. There is an ''eSubscription'' link on the Web site that enables subscribers to receive e-mail notification when a document is added to a subscribed docket(s). For assistance with any FERC Online service, please e-mail *FERCOnlineSupport@ferc.gov*, or call (866) 208–3676 (toll free). For TTY, call (202) 502–8659.

Comment Date: February 19, 2008.

Kimberly D. Bose,

Secretary.

[FR Doc. E8–1929 Filed 2–1–08; 8:45 am]

BILLING CODE 6717–01–P

DEPARTMENT OF ENERGY

Federal Energy Regulatory Commission

[Docket No. ER07–1199–001]

Airtricity Munnsville Wind Farm, LLC; Notice of Filing

January 28, 2008.

Take notice that on January 17, 2008, Airtricity Munnsville Wind Farm, LLC, tendered for filing revised market-based rate tariff sheets in response to a request for reformatting.

Any person desiring to intervene or to protest this filing must file in accordance with Rules 211 and 214 of the Commission's Rules of Practice and Procedure (18 CFR 385.211, 385.214). Protests will be considered by the Commission in determining the appropriate action to be taken, but will not serve to make protestants parties to the proceeding. Any person wishing to become a party must file a notice of intervention or motion to intervene, as appropriate. Such notices, motions, or protests must be filed on or before the comment date. Anyone filing a motion to intervene or protest must serve a copy of that document on the Applicant and all the parties in this proceeding.

The Commission encourages electronic submission of protests and interventions in lieu of paper using the ''eFiling'' link at *http://www.ferc.gov.* Persons unable to file electronically should submit an original and 14 copies of the protest or intervention to the Federal Energy Regulatory Commission, 888 First Street, NE., Washington, DC 20426.

This filing is accessible on-line at *http://www.ferc.gov*, using the ''eLibrary'' link and is available for review in the Commission's Public Reference Room in Washington, DC. There is an ''eSubscription'' link on the web site that enables subscribers to receive email notification when a document is added to a subscribed docket(s). For assistance with any FERC Online service, please e-mail *FERCOnlineSupport@ferc.gov*, or call (866) 208–3676 (toll free). For TTY, call (202) 502–8659.

Comment Date: 5 p.m. Eastern Time on February 7, 2008.

Kimberly D. Bose,

Secretary.

[FR Doc. E8–1926 Filed 2–1–08; 8:45 am]

BILLING CODE 6717–01–P

DEPARTMENT OF ENERGY

Federal Energy Regulatory Commission

Notice of Filing

January 28, 2008.

	Docket Nos.
Bangor Hydro-Electric Company	ER99–1522–004
Emera Energy Services, Inc	ER02–723–003
Emera Energy U.S. Subsidiary No. 1, Inc	ER04–359–002
Emera Energy U.S. Subsidiary No. 2, Inc	ER06–796–002
Emera Energy Services Subsidiary No. 1 LLC	ER07–553–001
Emera Energy Services Subsidiary No. 2 LLC	ER07–554–001
Emera Energy Services Subsidiary No. 3 LLC	ER07–555–001
Emera Energy Services Subsidiary No. 4 LLC	ER07–556–001
Emera Energy Services Subsidiary No. 5 LLC	ER07–557–001

Take notice that on January 17, 2008, the above-referenced proceedings, Emera Entities, submitted for filing, an Updated Market Power Analysis and revision to each of the market-based rate tariffs of their January 14, 2008 filing.

Any person desiring to intervene or to protest this filing must file in accordance with Rules 211 and 214 of the Commission's Rules of Practice and Procedure (18 CFR 385.211, 385.214). Protests will be considered by the Commission in determining the appropriate action to be taken, but will not serve to make protestants parties to the proceeding. Any person wishing to become a party must file a notice of intervention or motion to intervene, as

appropriate. Such notices, motions, or protests must be filed on or before the comment date. Anyone filing a motion to intervene or protest must serve a copy of that document on the Applicant and all the parties in this proceeding.

The Commission encourages electronic submission of protests and interventions in lieu of paper using the ''eFiling'' link at *http://www.ferc.gov*. Persons unable to file electronically should submit an original and 14 copies of the protest or intervention to the Federal Energy Regulatory Commission, 888 First Street, NE., Washington, DC 20426.

This filing is accessible on-line at *http://www.ferc.gov,* using the ''eLibrary'' link and is available for review in the Commission's Public Reference Room in Washington, DC. There is an ''eSubscription'' link on the Web site that enables subscribers to receive e-mail notification when a document is added to a subscribed docket(s). For assistance with any FERC Online service, please e-mail F*ERCOnlineSupport@ferc.gov,* or call (866) 208–3676 (toll free). For TTY, call (202) 502–8659.

Comment Date: 5 p.m. Eastern Time on March 14, 2008.

Kimberly D. Bose,

Secretary.

[FR Doc. E8–1927 Filed 2–1–08; 8:45 am]

BILLING CODE 6717–01–P

DEPARTMENT OF ENERGY

Federal Energy Regulatory Commission

[Docket No. QF08–375–000]

Town of Tarboro, NC at Spongex LLC, Tarboro, NC; Notice of Filing

January 28, 2008.

Take notice that on January 17, 2008, the Town of Tarboro, NC filed with the Commission a notice of self-certification of a facility as a qualifying cogeneration facility.

This qualifying cogeneration facility consists of a 2000 kW packaged diesel engine generator set operating on #2 fuel oil. The package is set on a concrete pad. The system includes all necessary switchgear and controls. The electricity is generated at 480 V, 3 phase, 60 Hz. The facility is located at Anaconda Road in Tarboro, NC.

This qualifying facility interconnects with the Town of Tarboro's electric distribution system. The facility will provide standby power and occasionally supplementary power to Spongex LLC.

A notice of self-certification does not institute a proceeding regarding qualifying facility status; a notice of self-certification provides notice that the entity making filing has determined the facility meets the applicable criteria to be a qualifying facility. Any person seeking to challenge such qualifying facility status may do so by filing a motion pursuant to 18 CFR 292.207(d)(iii).

This filing is accessible on-line at *http://www.ferc.gov,* using the ''eLibrary'' link and is available for review in the Commission's Public Reference Room in Washington, DC. There is an ''eSubscription'' link on the Web site that enables subscribers to receive e-mail notification when a document is added to a subscribed docket(s). For assistance with any FERC Online service, please e-mail *FERCOnlineSupport@ferc.gov,* or call (866) 208–3676 (toll free). For TTY, call (202) 502–8659.

Kimberly D. Bose,

Secretary.

[FR Doc. E8–1923 Filed 2–1–08; 8:45 am]

BILLING CODE 6717–01–P

DEPARTMENT OF ENERGY

Federal Energy Regulatory Commission

[Docket No. PR08–13–000]

Houston Pipe Line Company, L.P.; Notice of Petition for Rate Approval

January 28, 2008.

Take notice that on January 22, 2008, Houston Pipe Line Company, L.P. (HPL), filed a petition for approval of rates for transportation service, pursuant to section 284.123(b)(2) of the Commission's regulations. Commencing January 22, 2008, HPL requests that the Commission approve a maximum interruptible transportation rate of $0.3980 per MMBtu and a maximum fuel retention cap that varies by zone from 0.01 percent to 0.83 percent.

Any person desiring to participate in this rate proceeding must file a motion to intervene or to protest this filing must file in accordance with Rules 211 and 214 of the Commission's Rules of Practice and Procedure (18 CFR 385.211 and 385.214). Protests will be considered by the Commission in determining the appropriate action to be taken, but will not serve to make protestants parties to the proceeding. Any person wishing to become a party must file a notice of intervention or motion to intervene, as appropriate. Such notices, motions, or protests must be filed on or before the date as indicated below. Anyone filing an intervention or protest must serve a copy of that document on the Applicant. Anyone filing an intervention or protest on or before the intervention or protest date need not serve motions to intervene or protests on persons other than the Applicant.

The Commission encourages electronic submission of protests and interventions in lieu of paper using the ''eFiling'' link at *http://www.ferc.gov*. Persons unable to file electronically should submit an original and 14 copies of the protest or intervention to the Federal Energy Regulatory Commission, 888 First Street, NE., Washington, DC 20426.

This filing is accessible on-line at *http://www.ferc.gov*, using the ''eLibrary'' link and is available for review in the Commission's Public Reference Room in Washington, DC. There is an ''eSubscription'' link on the Web site that enables subscribers to receive e-mail notification when a document is added to a subscribed docket(s). For assistance with any FERC Online service, please e-mail *FERCOnlineSupport@ferc.gov*, or call (866) 208–3676 (toll free). For TTY, call (202) 502–8659.

Comment Date: 5 p.m. Eastern Time Monday, February 11, 2008.

Kimberly D. Bose,

Secretary.

[FR Doc. E8–1928 Filed 2–1–08; 8:45 am]

BILLING CODE 6717–01–P

DEPARTMENT OF ENERGY

Federal Energy Regulatory Commission

[Docket No. CP08–53–000]

Southern Star Central Gas Pipeline, Inc.; Notice of Request Under Blanket Authorization

January 28, 2008.

Take notice that on January 15, 2008, Southern Star Central Gas Pipeline, Inc., (Southern Star), 4700 State Highway 56, Owensboro, Kentucky 42301, filed in Docket No. CP08–53–000, a prior notice request pursuant to sections 157.205 and 157.210 of the Federal Energy Regulatory Commission's regulations under the Natural Gas Act for authorization to replace a 5.7 mile section of the 12-inch diameter XT pipeline by constructing approximately 5.7 miles of 20-inch diameter pipeline, located in Johnson County, Missouri, all as more fully set forth in the application, which is on file with the Commission and open to public inspection. The filing may also be

viewed on the web at *http://www.ferc.gov* using the ''eLibrary'' link. Enter the docket number excluding the last three digits in the docket number field to access the document. For assistance, contact FERC at *FERCOnlineSupport@ferc.gov* or call toll-free, (886) 208–3676 or TYY, (202) 502–8659.

Southern Star states that the proposed 20-inch replacement will be constructed beginning at the end of an existing 20-inch loop pipeline and continuing in an eastward direction for approximately 5.7 miles. Southern Star asserts that after the proposed construction is completed, approximately 5.7 miles of the 12-inch XT pipeline will be abandoned either in place or by reclaim. Southern Star estimates the cost of construction to be $7,389,273.

Southern Star declares that the replacement pipeline will improve reliability and offer flexibility on its system. Southern Star states that the replacement does not provide any additional firm capacity upstream.

Any questions regarding the application should be directed to David N. Roberts, Manager, Regulatory Affairs, Southern Star Central Gas Pipeline, Inc., 4700 State Highway 56, Owensboro, Kentucky 42301, call (270) 852–4654.

Any person or the Commission's Staff may, within 60 days after the issuance of the instant notice by the Commission, file pursuant to Rule 214 of the Commission's Procedural Rules (18 CFR 385.214) a motion to intervene or notice of intervention and, pursuant to section 157.205 of the Commission's Regulations under the Natural Gas Act (NGA) (18 CFR 157.205) a protest to the request. If no protest is filed within the time allowed therefore, the proposed activity shall be deemed to be authorized effective the day after the time allowed for protest. If a protest is filed and not withdrawn within 30 days after the time allowed for filing a protest, the instant request shall be treated as an application for authorization pursuant to section 7 of the NGA.

The Commission strongly encourages electronic filings of comments, protests, and interventions via the internet in lieu of paper. See 18 CFR 385.2001(a)(1)(iii) and the instructions on the Commission's Web site (*http://www.ferc.gov*) under the ''e-Filing'' link.

Kimberly D. Bose,

Secretary.

[FR Doc. E8–1925 Filed 2–1–08; 8:45 am]

BILLING CODE 6717–01–P

ENVIRONMENTAL PROTECTION AGENCY

[FRL–85-25–1]

Establishment of the Farm, Ranch, and Rural Communities Advisory Committee (FRRCC)

AGENCY: Environmental Protection Agency (EPA).

ACTION: Notice; establishment of a Federal Advisory Committee.

SUMMARY: As required by section 9(a)(2) of the Federal Advisory Committee Act, we are giving notice that EPA is establishing the Farm, Ranch, and Rural Communities Advisory Committee (FRRCC). The purpose of the FRRCC is to provide advice to the Administrator of EPA on environmental issues and programs that impact, or are of concern to, farms, ranches, and rural communities. The FRRCC is a part of EPA's efforts to expand cooperative working relationships with the agriculture industry and others who are interested in agriculture issues and to achieve greater progress in environmental protection. The major objectives will be to provide advice and recommendations on: Impacts of Agency agriculture-related programs, policies, and regulations regarding climate change and renewable energy; identification and development of a comprehensive environmental strategy for livestock operations; and development of a constructive approach or framework to address areas of common interest between sustainable agriculture and protection of the environment. Topics covered may include issues relating to water, air and radiation, solid waste and emergency response, pesticides and toxics, enforcement and compliance assistance, and research and development. EPA has determined that this federal advisory committee is in the public interest and will assist the Agency in performing its duties and responsibilities. Copies of the FRRCC's charter will be filed with the appropriate congressional committees and the Library of Congress.

FOR FURTHER INFORMATION CONTACT: Alicia Kaiser, Special Assistant for Agricultural Policy, US Environmental Protection Agency (2415B Ariel Rios North), 1200 Pennsylvania Avenue, NW., Washington, DC 20460, E-mail address: *Kaiser.Alicia@epa.gov*, Telephone number: (202) 564–7273.

SUPPLEMENTARY INFORMATION: The FRRCC will be composed of approximately thirty (30) members who will serve as Regular Government Employees (RGEs) or as Representative members. The FRRCC expects to meet approximately two (2) times a year, or as needed and approved by the Designated Federal Officer (DFO). Meetings will be held in Washington, DC, and the EPA regions. The FRRCC will be examined annually and will exist until the EPA determines that the FRRCC is no longer needed. The charter will be in effect for two years from the date it is filed with Congress. After the initial two-year period, the charter may be renewed as authorized in accordance with section 14 of FACA (5 U.S.C. App. 2 section 14).

Membership: Nominations for membership on the FRRCC were solicited from the public through the **Federal Register** and from other sources. In selecting members, EPA will consider candidates from farm groups, conservation and environmental groups, agricultural processors and retailers, academia, citizen's groups, and state, local, and tribal governments, will consider the differing perspectives and the collective breadth of experience needed to address the Agency's charge. Because of the nature of the issues to be discussed, it is the intent of the Agency for the FRRCC to have a majority of members who are actively engaged in farming or ranching. USDA and other Federal agencies, as appropriate, will be invited to nominate members to serve as RGEs.

Dated: January 17, 2008.

Jon Scholl,

Counselor to the Administrator for Agricultural Policy.

[FR Doc. 08–477 Filed 2–1–08; 8:45 am]

BILLING CODE 6560–50–M

ENVIRONMENTAL PROTECTION AGENCY

[FRL–8524–3]

Notice of Open Meeting of the Environmental Financial Advisory Board (EFAB)

AGENCY: Environmental Protection Agency (EPA).

ACTION: Notice.

SUMMARY: The EPA's EFAB will hold an open meeting of the full board in Washington, DC on March 10–11, 2008. EFAB is an EPA advisory committee chartered under the Federal Advisory Committee Act (FACA) to provide advice and recommendations to EPA on creative approaches to funding environmental programs, projects, and activities.

The purpose of this meeting is to hear from informed speakers on

environmental finance issues, proposed legislation, Agency priorities, and to discuss progress with work products under EFAB's current Strategic Action Agenda.

Environmental financing topics expected to be discussed include: Financial Assurance Mechanisms (Commercial Insurance & Cost Estimation), Environmental Management Systems, Public-Private Partnerships, Sustainable Watershed Financing, Innovative Financing Tools, and Leveraging the State Revolving Loan Funds.

This meeting is open to the public, however, seating is limited. All members of the public who plan to attend the meeting must register in advance, no later than Friday, February 29, 2008.

DATES: Full Board Meeting is scheduled for March 10, 2008 from 1 p.m.–5 p.m. and March 11, 2008 from 8:30 a.m.–5 p.m.

ADDRESSES: The American Institute of Architects, 1735 New York Ave., NW., Washington, DC 20006.

Registration and Information Contact

To register for this meeting or get further information, please contact Alecia Crichlow, EPA, at (202) 564–5188 or *crichlow.alecia@epa.gov*. For information on access or services for individuals with disabilities, please contact Alecia Crichlow. To request accommodations for a disability, contact Alecia Crichlow, preferably at least 10 days prior to the meeting, to give EPA as much time as possible to process your request.

Dated: January 23, 2008.

Terry Ouverson,

Acting Director, Office of Enterprise Technology & Innovation.

[FR Doc. E8–1955 Filed 2–1–08; 8:45 am]

BILLING CODE 6560–50–P

ENVIRONMENTAL PROTECTION AGENCY

[FRL–8524–5]

Meeting of the Total Coliform Rule Distribution System Advisory Committee—Notice of Public Meeting

AGENCY: Environmental Protection Agency (EPA).

ACTION: Notice.

SUMMARY: Under Section 10(a)(2) of the Federal Advisory Committee Act, the United States Environmental Protection Agency (EPA) is giving notice of a meeting of the Total Coliform Rule Distribution System Advisory Committee (TCRDSAC). The purpose of this meeting is to discuss the Total Coliform Rule (TCR) revision and information about distribution systems issues that may impact water quality.

The TCRDSAC advises and makes recommendations to the Agency on revisions to the TCR, and on what information should be collected, research conducted, and/or risk management strategies evaluated to better inform distribution system contaminant occurrence and associated public health risks.

Topics to be discussed in the meeting include possible options for revising the Total Coliform Rule, performance of analytical methods, EPA's plans for compliance with the Small Business Regulatory Enforcement Fairness Act, and topics for upcoming TCRDSAC meetings.

DATES: The public meeting will be held on Wednesday, February 20, 2008 (8:30 a.m. to 6 p.m., Eastern Time (ET)) and Thursday, February 21, 2008 (8 a.m. to 3 p.m., ET). Attendees should register for the meeting by calling Kate Zimmer at (202) 965–6387 or by e-mail to *kzimmer@resolv.org* no later than February 15, 2008.

ADDRESSES: The meeting will be held at RESOLVE, 1255 Twenty-Third St., NW., Suite 275, Washington, DC 20037.

FOR FURTHER INFORMATION CONTACT: For general information, contact Kate Zimmer of RESOLVE at (202) 965–6387. For technical inquiries, contact Ken Rotert (*rotert.kenneth@epa.gov*, (202) 564–5280), Standards and Risk Management Division, Office of Ground Water and Drinking Water (MC 4607M), Environmental Protection Agency, 1200 Pennsylvania Ave., NW., Washington, DC 20460; FAX number: (202) 564–3767.

SUPPLEMENTARY INFORMATION: The meeting is open to the public. The Committee encourages the public's input and will take public comment starting at 5:30 p.m. on February 20, 2008, for this purpose. It is preferred that only one person present the statement on behalf of a group or organization. To ensure adequate time for public involvement, individuals interested in presenting an oral statement may notify Crystal Rodgers-Jenkins, the Designated Federal Officer, by telephone at (202) 564–5275, no later than February 15, 2008. Any person who wishes to file a written statement can do so before or after a Committee meeting. Written statements received by February 15, 2008, will be distributed to all members before any final discussion or vote is completed. Any statements received on February 18, 2008, or after the meeting will become part of the permanent meeting file and will be forwarded to the members for their information.

Special Accommodations

For information on access or accommodations for individuals with disabilities, please contact Crystal Rodgers-Jenkins at (202) 564–5275 or by e-mail at *rodgers-jenkins.crystal@epa.gov*. Please allow at least 10 days prior to the meeting to give EPA as much time as possible to process your request.

Dated: January 29, 2008.

Cynthia C. Dougherty,

Director, Office of Ground Water and Drinking Water.

[FR Doc. E8–1954 Filed 2–1–08; 8:45 am]

BILLING CODE 6560–50–P

EQUAL EMPLOYMENT OPPORTUNITY COMMISSION

Sunshine Act Notice

AGENCY HOLDING THE MEETING: Equal Employment Opportunity Commission.

"FEDERAL REGISTER" CITATION OF PREVIOUS ANNOUNCEMENT: 73 FR 5840, Thursday, January 31, 2008.

PREVIOUSLY ANNOUNCED TIME AND DATE OF MEETING: Thursday, February 7, 2008, 2 p.m. (Eastern Time).

CHANGE IN THE MEETING: The meeting has been cancelled.

CONTACT PERSON FOR MORE INFORMATION: Stephen Llewellyn, Executive Officer on (202) 663–4070.

Dated: January 31, 2008.

Stephen Llewellyn,

Executive Officer, Executive Secretariat.

[FR Doc. 08–508 Filed 1–31–08; 2:58 pm]

BILLING CODE 6570–01–M

FEDERAL COMMUNICATIONS COMMISSION

Public Information Collections Approved by Office of Management and Budget

January 29, 2008.

SUMMARY: The Federal Communications Commission (FCC) has received Office of Management and Budget (OMB) approval for the following public information collection(s) pursuant to the Paperwork Reduction Act of 1995, 44 U.S.C. 3501–3520. An agency may not conduct or sponsor and a person is not required to respond to a collection of information unless it displays a currently valid control number.

FOR FURTHER INFORMATION CONTACT: Leslie F. Smith, Federal Communications Commission, (202) 418–0217 or via the Internet at *Leslie.Smith@fcc.gov.*

SUPPLEMENTARY INFORMATION:

OMB Control Number: 3060–0589.

Title: FCC Remittance Advice and Continuation Sheet, Bill for Collection, FCC Remittance Advice for Regulatory Fees (E-Form).

OMB Approval Date: 01/23/2008.

Expiration Date: 01/31/2011.

Form Number(s): FCC Forms 159, 159–C, 159–B, 159–E, and 159–W.

Type of Review: Revision of a currently approved collection.

Respondents: Individuals or households; business or other for-profit; not-for-profit institutions; Federal government; and State, local, or tribal government.

Number of Respondents: 156,000.

Estimated Time per Response: 0.25 hours (15 minutes).

Frequency of Response: On occasion and annual reporting requirements; third party disclosure.

Obligation to Respond: Required to obtain or retain benefits.

Total Annual Burden: 39,000 hours.

Total Annual Cost: None.

Privacy Impact Assessment: No impacts.

Needs and Uses: On August 6, 2007, the FCC released a *Report and Order and Further Notice of Proposed Rulemaking* (*''R&O and FNPRM''*), In the Matter of Assessment and Collection of Regulatory Fees for Fiscal Year 2007, MD Docket No. 07–81, FCC 07–XX, in which it applied regulatory fee obligations to interconnected Voice over Internet Protocol (VoIP) providers. As a result of this action, the FCC is modifying FCC Form 159, 159–C, and 159–E to accommodate this new category of entities subject to regulatory fees.

The Commission created a streamlined electronic form, FCC Form 159–E, to associate a mailed or faxed payment with regulatory fees, which are filed on-line. Pertinent information is taken directly from the regulatory fee electronic filing system (Fee Filer) and populated on the FCC Form 159–E, which can be printed by the filer. The FCC Form 159–E, essentially a simple payment voucher, contains summary information, which distinguishes the payment but not detailed information about the fee(s). Specific associated fee information is available on a separate report, which the filer does not need to remit. Beginning with the FY 2005 regulatory fees, the Commission has required FCC Form 159–E to accompany all payments derived from the regulatory fee electronic filing system, except on-line payments, which do not require any paper submission. Payment may be made by check or money order, credit card or wire transfer.

The Commission uses this information to apply credit for the remittance against all regulatory fees within the associated electronic submission. The payment instrument must be in the dollar amount specified on the FCC Form 159–E for full credit to be applied.

Expanded use of the FCC Form 159–E is possible in the future as additional streamlining for this process is implemented. This form may be used in lieu of pre-populated FCC Form 159s, which are currently produced to facilitate remittance for various electronic filings. The FCC Form 159–E may, therefore, impact users of all electronic filing systems, as well as users of an FCC bill paying system (currently Fee Filer and the Red Light Display system). This information collection may affect some individuals or households; however, the Commission has in place a registration process *http://www.fcc.gov,* which issues a Federal Registration Number (FRN) to each applicant/licensee, *etc.,* for use in filing any of these FCC Forms 159/159–C, 159–B, 159–E, and/or 159–W. As part of the registration process, the applicant/licensee's SSN or TIN is stored in a secure environment, which minimizes any potential privacy risks. The Commission has merged 3060–0949, Interstate Telephone Service Provider Worksheet, FCC Form 159–W, into this information collection, and now that OMB has approved 3060–0589, the Commission intends to cancel 3060–0949.

The FCC bills telecommunications licensees and permittees using the FCC Form 159–W as the invoice. The FCC developed FCC Form 159–W to provide a convenient format for these telecommunications licensees and permittees to verify the information that is extracted from the interstate revenue information (which is already ''populated'' on this form), to verify the simple calculation of the fee amount that is due, and to correct any inaccuracies as necessary. The FCC uses this form to bill the telecommunications licensee or permittee the amount of its regulatory fee. The FCC is making minor revisions to FCC Form 159–W to provide a clearer format. Respondents may access FCC Form 159–W on-line through the FCC's Web page: *http://www.fcc.gov/frnreg* if they wish to submit payment prior to being billed.

Federal Communications Commission.

Marlene H. Dortch,

Secretary.

[FR Doc. E8–1975 Filed 2–1–08; 8:45 am]

BILLING CODE 6712–01–P

FEDERAL COMMUNICATIONS COMMISSION

Notice of Public Information Collection(s) Being Reviewed by the Federal Communications Commission, Comments Requested

January 29, 2008.

SUMMARY: The Federal Communications Commission, as part of its continuing effort to reduce paperwork burden, invites the general public and other Federal agencies to take this opportunity to comment on the following information collection(s), as required by the Paperwork Reduction Act of 1995, 44 U.S.C. 3501–3520. An agency may not conduct or sponsor a collection of information unless it displays a currently valid control number. No person shall be subject to any penalty for failing to comply with a collection of information subject to the Paperwork Reduction Act (PRA) that does not display a valid control number. Comments are requested concerning (a) whether the proposed collection of information is necessary for the proper performance of the functions of the Commission, including whether the information shall have practical utility; (b) the accuracy of the Commission's burden estimate; (c) ways to enhance the quality, utility, and clarity of the information collected; and (d) ways to minimize the burden of the collection of information on the respondents, including the use of automated collection techniques or other forms of information technology.

DATES: Written comments should be submitted on or before April 4, 2008. If you anticipate that you will be submitting comments, but find it difficult to do so within the period of time allowed by this notice, you should advise the contact listed below as soon as possible.

ADDRESSES: You may submit all PRA comments by e-mail or U.S. mail. To submit your comments by e-mail, send them to *PRA@fcc.gov.* To submit your comments by U.S. mail, send them to Leslie F. Smith, Federal Communications Commission, Room 1–C216, 445 12th Street, SW., Washington, DC 20554.

FOR FURTHER INFORMATION CONTACT: For additional information about the information collection(s), contact Leslie

F. Smith via e-mail at *PRA@fcc.gov* or call (202) 418–0217.

SUPPLEMENTARY INFORMATION:

OMB Control Number: 3060–0715.

Title: Telecommunications Carriers' Use of Customer Proprietary Network Information (CPNI) and Other Customer Information, CC Docket No. 96–115.

Form Number: N/A.

Type of Review: Extension of a currently approved collection.

Respondents: Business or other for-profit entities.

Number of Respondents and Responses: 6,017 respondents; 137,256,125 responses.

Estimated Time per Response: 0.153 minutes.

Frequency of Response: On occasion, biennial, annual, and one time reporting requirements; recordkeeping; and third party disclosure.

Obligation to Respond: Mandatory as required by section 222 of the Communications Act of 1934, as amended, 47 U.S.C. 222.

Total Annual Burden: 350,704 hours.

Total Annual Cost: $3,000,000.

Privacy Act Impact Assessment: No impacts.

Nature and Extent of Confidentiality: The Commission is not requesting that the respondents submit confidential information to the FCC. Respondents may, however, request confidential treatment for information they believe to be confidential under 47 CFR 0.459 of the Commission's rules.

Needs and Uses: Section 222 of the Communications Act of 1934, as amended, 47 U.S.C. 222, establishes a duty of every telecommunications carrier to protect the confidentiality of its customers' CPNI, which includes personally identifiable information derived from a customer's relationship with a provider of communications services. This information collection implements the statutory obligations of section 222. These regulations impose safeguards to protect customers' CPNI against unauthorized access and disclosure. In March 2007, the Commission adopted new rules in the *CPNI Order, CC Docket No. 96–115* et al., *FCC 07–22, which* focused on the efforts of providers of communications services to prevent pretexting. These rules required providers of communications services to adopt additional privacy safeguards that, the Commission believes, will sharply limit pretexters' ability to obtain unauthorized access to the type of personal customer information from carriers that the Commission regulates. In addition, in furtherance of the Telephone Records and Privacy Protection Act of 2006, the Commission's rules help ensure that law enforcement will have necessary tools to investigate and enforce prohibitions on illegal access to customer records.

Federal Communications Commission.

Marlene H. Dortch,

Secretary.

[FR Doc. E8–1976 Filed 2–1–08; 8:45 am]

BILLING CODE 6712–01–P

FEDERAL COMMUNICATIONS COMMISSION

Notice of Public Information Collection(s) Being Reviewed by the Federal Communications Commission for Extension Under Delegated Authority, Comments Requested

January 29, 2008.

SUMMARY: The Federal Communications Commission, as part of its continuing effort to reduce paperwork burden, invites the general public and other Federal agencies to take this opportunity to comment on the following information collection(s), as required by the Paperwork Reduction Act of 1995 (PRA), 44 U.S.C. Sections 3501—3520. An agency may not conduct or sponsor a collection of information unless it displays a current valid control number. No person shall be subject to any penalty for failing to comply with a collection of information subject to the PRA that does not display a valid control number. Comments are requested concerning: (a) Whether the proposed collection of information is necessary for the proper performance of the functions of the Commission, including whether the information shall have practical utility; (b) the accuracy of the Commission's burden estimate; (c) ways to enhance the quality, utility, and clarity of the information collected; and (d) ways to minimize the burden of the collection of information on the respondents, including the use of automated collection techniques or other forms of information technology.

DATES: Written PRA comments should be submitted on or before April 4, 2008. If you anticipate that you will be submitting comments, but find it difficult to do so within the period of time allowed by this notice, you should advise the contact listed below as soon as possible.

ADDRESSES: You may submit all PRA comments by e-mail or U.S. mail. To submit your comments by e-mail, send them to *PRA@fcc.gov.* To submit your comments by U.S. mail, send them to Leslie F. Smith, Federal Communications Commission, Room 1–C216, 445 12th Street, SW., Washington, DC 20554, or via the Internet to *PRA@fcc.gov.*

FOR FURTHER INFORMATION CONTACT: For additional information about the information collection(s), contact Leslie F. Smith via the Internet at *PRA@fcc.gov* or call (202) 418–0217.

SUPPLEMENTARY INFORMATION:

OMB Control Number: 3060–1005.

Title: Numbering Resource Optimization—Phase 3.

Form Numbers: N/A.

Type of Review: Extension of a currently approved collection.

Respondents: Businesses or other for profit; State, local or tribal government.

Number of Respondents and Responses: 17 respondents; 17 responses.

Estimated Time per Response: 55–85 hours.

Obligation to Respond: Required to obtain or retain benefits.

Frequency of Response: On occasion reporting requirement; third party disclosure.

Total Annual Burden: 860 hours.

Annual Cost Burden: None.

Privacy Act Impact Assessment: No impacts.

Nature of Extent of Confidentiality: The Commission is not requesting that the respondents submit confidential information to the FCC. Respondents may, however, request confidential treatment for information they believe to be confidential under 47 CFR 0.459 of the Commission's rules.

Needs and Uses: In the Communications Act of 1934, as amended by the Telecommunications Act of 1996, the Federal Communications Commission (''Commission'') was given ''exclusive jurisdiction over those portions of the North American Numbering Plan (NANP) that pertains to the United States.'' To ensure that the numbering resources of the NANP continue to be used efficiently, the Commission requires that applications to state commissions from carriers must demonstrate that certain requirements are met before states grant any use of the safety valve mechanism. It also requires that State commissions seeking to implement service-specific and/or technology-specific area code overlays, must request delegated authority to do so. The information collected by the FCC and state commissions will be used to assist these regulatory bodies in their efforts to maximize the efficiency with which numbering resources in the NANP are utilized.

Federal Communications Commission.

Marlene H. Dortch,

Secretary.

[FR Doc. E8–1977 Filed 2–1–08; 8:45 am]

BILLING CODE 6712–01–P

FEDERAL COMMUNICATIONS COMMISSION

Notice of Public Information Collection(s) Being Reviewed by the Federal Communications Commission, Comments Requested

January 28, 2008.

SUMMARY: The Federal Communications Commission, as part of its continuing effort to reduce paperwork burdens, invites the general public and other Federal agencies to take this opportunity to comment on this proposed collection of information, in accordance with the Paperwork Reduction Act of 1995 (PRA), Public Law 104–13. An agency may not conduct or sponsor a collection of information unless it displays a currently valid control number. Subject to the PRA, no person shall be subject to any penalty for failing to comply with a collection of information that does not display a valid control number. Comments are requested concerning (a) whether the proposed collection of information is necessary for the proper performance of the functions of the Commission, including whether the information shall have practical utility; (b) the accuracy of the Commission's burden estimate; (c) ways to enhance the quality, utility, and clarity of the information collected; and (d) ways to minimize the burden of the collection of information on the respondents, including the use of automated collection techniques or other forms of information technology.

DATES: Written PRA comments should be submitted on or before April 4, 2008. If you anticipate that you will be submitting comments, but find it difficult to do so within the period of time allowed by this notice, you should advise the contact listed below as soon as possible.

ADDRESSES: You may submit all PRA comments by e-mail or U.S. post mail. To submit your comments by e-mail, send them to *PRA@fcc.gov.* To submit your comments by U.S. mail, mark them to the attention of Cathy Williams, Federal Communications Commission, Room 1–C823, 445 12th Street, SW., Washington, DC 20554.

FOR FURTHER INFORMATION CONTACT: For additional information about the information collection(s), contact Cathy Williams at (202) 418–2918 or send an e-mail to *PRA@fcc.gov.*

SUPPLEMENTARY INFORMATION:

OMB Control Number: 3060–0027.

Type of Review: Extension of a currently approved collection.

Title: Application for Construction Permit for Commercial Broadcast Station.

Form Number: FCC Form 301.

Respondents: Business or other for-profit entities; not-for-profit institutions.

Number of Respondents: 4,278.

Estimated Time per Response: 2 to 4 hours.

Frequency of Response: On occasion reporting requirement; one time reporting requirement; third party disclosure requirement.

Total Annual Burden: 10,513 hours.

Total Annual Cost: $51,350,347.

Needs and Uses: Congress has mandated that after February 17, 2009, full-power television broadcast stations must transmit only in digital signals, and may no longer transmit analog signals. On December 22, 2007, the Commission adopted a Report and Order in the matter of the *Third Periodic Review of the Commission's Rules and Policies Affecting the Conversion to Digital Television,* MB Docket No. 07–91, FCC 07–228, to establish the rules, policies and procedures necessary to complete the nation's transition to DTV. With the DTV transition deadline less than 14 months away, the Commission must ensure that broadcasters meet their statutory responsibilities and complete construction of, and begin operations on, the facility on their final, post-transition (digital) channel that will reach viewers in their authorized service areas by the statutory transition deadline, when they must cease broadcasting in analog. The Commission wants to ensure that no consumers are left behind in the DTV transition.

Specifically, the Report and Order requires full-power commercial television stations to use revised FCC Form 301 to obtain the necessary Commission approvals (*i.e.*, construction permits and licenses) in time to build their post-transition facility.

• *Applications for post-transition facilities.* Full-power commercial television stations without a construction permit for their final, post-transition (DTV) facility must file an application to construct or modify that facility using FCC Forms 301.

• *Requests to transition early to post-transition channel.* Full-power commercial television stations may request authority to transition early to their post-transition channel using FCC Form 301.

• *Revisions to FCC Form 301.* FCC Form 301 was revised to accommodate the filing of post-transition applications.

The FCC received approval under the ''emergency processing provisions'' of the PRA on January 7, 2008. The requirements for this collection have not changed since we received approval.

OMB Control Number: 3060–0029.

Title: Application for TV Broadcast Station License, FCC Form 302 TV; Application for DTV Broadcast Station License, FCC Form 302–DTV; Application for Construction Permit for Reserved Channel Noncommercial Educational Broadcast Station, FCC Form 340; Application for Authority to Construct or Make Changes in an FM Translator or FM Booster Station, FCC Form 349.

Form Number(s): FCC Form 302–TV; FCC Form 302–DTV; FCC Form 340; FCC Form 349.

Type of Review: Extension of a currently approved collection.

Respondents: Business or other for-profit entities; not-for-profit institutions; State, local or tribal government.

Number of Respondents: 4,325.

Frequency of Response: On occasion reporting requirement; recordkeeping requirement; one time reporting requirement; third party disclosure requirement.

Estimated Time Per Response: 2 to 4 hours.

Total Annual Burden: 12,150 hours.

Total Annual Costs: $21,091,625.

Nature of Response: Required to obtain or retain benefits.

Confidentiality: No need for confidentiality required.

Privacy Impact Assessment: No impact(s).

Needs and Uses: Congress has mandated that after February 17, 2009, full-power television broadcast stations must transmit only in digital signals, and may no longer transmit analog signals. On December 22, 2007, the Commission adopted a Report and Order in the matter of the *Third Periodic Review of the Commission's Rules and Policies Affecting the Conversion to Digital Television,* MB Docket No. 07–91, FCC 07–228, to establish the rules, policies and procedures necessary to complete the nation's transition to DTV. With the DTV transition deadline less than 14 months away, the Commission must ensure that broadcasters meet their statutory responsibilities and complete construction of, and begin operations on, the facility on their final, post-transition (digital) channel that will reach viewers in their authorized service areas by the statutory transition deadline, when they must cease broadcasting in analog. The Commission

wants to ensure that no consumers are left behind in the DTV transition. Specifically, the Report and Order requires Noncommercial Educational (''NCE'') television stations to use revised FCC Form 340 to obtain the necessary Commission approvals (i.e., construction permits and licenses) in time to build their post-transition facility.

• *Applications for post-transition facilities.* NCE television stations without a construction permit for their final, post-transition (DTV) facility must file an application to construct or modify that facility using FCC Forms 340.

• *Requests to transition early to post-transition channel.* NCE television stations may request authority to transition early to their post-transition channel using FCC Form 340.

• *Revisions to FCC Form 340.* FCC Form 340 was revised to accommodate the filing of post-transition applications.

In addition, the Report and Order requires that stations that have applied to construct or modify post-transition facilities must use the Form 302–DTV to obtain a new or modified station license to cover those post-transition facilities.

The FCC received approval under the ''emergency processing provisions'' of the PRA on January 7, 2008. The requirements for this collection have not changed since we received approval.

OMB Control Number: 3060–0433.

Title: Basic Signal Leakage Performance Report.

Form Number: FCC Form 320.

Type of Review: Extension of a currently approved collection.

Respondents: Business or other for-profit entities.

Number of Respondents: 7,100.

Frequency of Response: Recordkeeping requirement; annual reporting requirement.

Estimated Time per Hours: 17 hours.

Total Annual Burden: 120,700 hours.

Total Annual Cost: None.

Nature of Response: Required to obtain or retain benefits.

Confidentiality: No need for confidentiality required.

Privacy Impact Assessment(s): No impact(s).

Needs and Uses: Cable television system operators and Multichannel Video Programming Distributors (MPVDs) who use frequencies in the bands 108–137 and 225–400 MHz (aeronautical frequencies) are required to file a Cumulative Signal Leakage Index (CLI) derived under 47 CFR 76.611(a)(1) or the results of airspace measurements derived under 47 CFR 76.611(a)(2). This filing must include a description of the method by which compliance with basic signal leakage criteria is achieved and the method of calibrating the measurement equipment. This yearly filing of FCC Form 320 is done in accordance with 47 CFR 76.1803.

OMB Control Number: 3060–0980.

Title: SHVERA Procedural Rules; Implementation of the Satellite Home Viewer Extension and Reauthorization Act of 2004 (Broadcast Signal Carriage Issues, Retransmission Consent Issues).

Form Number: Not applicable.

Type of Review: Extension of a currently approved collection.

Respondents: Business and other for-profit entities.

Number of Respondents: 7,179.

Estimated Hours per Response: 1 to 5 hours.

Frequency of Response: On occasion reporting requirement.

Total Annual Burden: 10,196 hours.

Total Annual Cost: $30,000.

Nature of Response: Required to obtain or retain benefits.

Confidentiality: No need for confidentiality required.

Privacy Impact Assessment(s): No impact(s).

Needs and Uses: 47 CFR 76.66(c)(3) requires that a commercial television station notify a satellite carrier in writing whether it elects to be carried pursuant to retransmission consent or mandatory consent in accordance with the established election cycle.

47 CFR 76.66(c)(5) requires that a noncommercial television station must request carriage by notifying a satellite carrier in writing in accordance with the established election cycle.

47 CFR 76.66(c)(6) requires a commercial television broadcast station located in a local market in a noncontiguous state to make its retransmission consent-mandatory carriage election by October 1, 2005, for carriage of its signals that originate as analog signals for carriage commencing on December 8, 2005 and ending on December 31, 2008, and by April 1, 2007 for its signals that originate as digital signals for carriage commencing on June 8, 2007 and ending on December 31, 2008. For analog and digital signal carriage cycles commencing after December 31, 2008, such stations shall follow the election cycle in 47 CFR 76.66(c)(2) and 47 CFR 76.66(c)(4). A noncommercial television broadcast station located in a local market in Alaska or Hawaii must request carriage by October 1, 2005, for carriage of its signals that originate as an analog signal for carriage commencing on December 8, 2005 and ending on December 31, 2008, and by April 1, 2007 for its signals that originate as digital signals for carriage commencing on June 8, 2007 and ending on December 31, 2008. Moreover, section 76.66(c) requires a commercial television station located in a local market in a noncontiguous state to provide notification to a satellite carrier whether it elects to be carried pursuant to retransmission consent or mandatory consent.

47 CFR 76.66(d) states a television station's written notification must include its call sign, the name of a station contact, the station's community of license, the station's designated market area (DMA) assignment, and, for commercial stations, its election of mandatory carriage or retransmission consent. Within 30 days of receiving a request for carriage, a satellite carrier must notify in writing any station whether it will carry the station requested. If the satellite carrier will not carry the station, it must include its reasons for denying carriage.

47 CFR 76.66(d)(2) requires satellite carriers to issue notices to station licensees when the carrier is going to initiate new local service. These notifications are required to be sent by certified mail to the television station licensees.

47 CFR 76.66(d)(2)(iii) requires a satellite carrier with more than five million subscribers to provide a notice as required by 47 CFR 76.66(d)(2)(i) and 47 CFR 76.66(d)(2)(ii) to each television broadcast station located in a local market in a noncontiguous state, not later than September 1, 2005 with respect to analog signals and a notice not later than April 1, 2007 with respect to digital signals; provided, however, that the notice shall also describe the carriage requirements pursuant to section 338(a)(4) of title 47, United States Code, and 47 CFR 76.66(b)(2).

47 CFR 76.66(d)(5) applies to satellite carriers that carry or intend to carry significantly viewed signals and provide television stations with different carriage election options in counties and markets in which the satellite carrier is offering significantly viewed signals. Therefore, if satellite carriers elect to carry significantly viewed signals, they are required to provide notifications to local broadcast stations informing them of their rights to elect mandatory carriage or retransmit consent on a county basis.

47 CFR 76.66(m) states whenever a local broadcast station believes that a satellite carrier has failed to meet its obligations under this section, such station shall notify the carrier, in writing, of the alleged failure and identify its reason for believing that the

satellite carrier failed to comply with its obligations.

The satellite carrier shall, within 30 days of such written notification, respond in writing to such notification and comply with such obligations or state its reasons for believing that it is in compliance. A local station that disputes a satellite carrier's response may obtain review of such response by filing a compliant with the Commission in accordance with 47 CFR 76.7 of the rules.

OMB Control Number: 3060–1105.

Title: Digital TV Transition Status Report.

Form Number: FCC Form 387.

Type of Review: Revision of a currently approved collection.

Respondents: Business or other for-profit entities; not-for-profit institutions.

Number of Respondents: 1,812.

Frequency of Response: On occasion reporting requirement.

Estimated Time per Response: 2 hours.

Total Annual Burden: 3,624 hours.

Total Annual Costs: $1,268,400.

Nature of Response: Required to obtain or retain benefits.

Confidentiality: No need for confidentiality required.

Privacy Impact Assessment: No impact(s).

Needs and Uses: Congress has mandated that after February 17, 2009, full-power television broadcast stations must transmit only in digital signals, and may no longer transmit analog signals. On December 22, 2007, the Commission adopted a Report and Order, In the Matter of the Third Periodic Review of the Commission's Rules and Policies Affecting the Conversion to Digital Television, MB Docket No. 07–91, FCC 07–228, to establish the rules, policies and procedures necessary to complete the nation's transition to Digital TV (DTV). With the DTV transition deadline less than 14 months away, the Commission must ensure that broadcasters meet their statutory responsibilities and complete construction of, and begin operations on, the facility on their final, post-transition (digital) channel that will reach viewers in their authorized service areas by the statutory transition deadline, when they must cease broadcasting in analog.

The Commission wants to ensure that no consumers are left behind in the DTV transition.

This Report and Order requires all full-power television stations to file a DTV Transition Status Report using FCC Form 387 on or before February 19, 2008. In addition, stations must update these forms as events warrant and, by October 20, 2008, if they have not by that date reported the completion of their transition, i.e., that they have begun operating their full facility as authorized by the post-transition DTV Table Appendix B. Stations must provide the specific details of their current transition status, any additional steps necessary for digital-only operation upon expiration of the February 17, 2009 transition deadline, and a timeline for making those steps.

Federal Communications Commission.

Marlene H. Dortch,

Secretary.

[FR Doc. E8–1978 Filed 2–1–08; 8:45 am]

BILLING CODE 6712–01–P

DEPARTMENT OF THE TREASURY

Office of the Comptroller of the Currency

FEDERAL RESERVE SYSTEM

FEDERAL DEPOSIT INSURANCE CORPORATION

DEPARTMENT OF THE TREASURY

Office of Thrift Supervision

Agency Information Collection Activities: Submission for OMB Review; Joint Comment Request

AGENCIES: Office of the Comptroller of the Currency (OCC), Treasury; Board of Governors of the Federal Reserve System (Board); Federal Deposit Insurance Corporation (FDIC); and Office of Thrift Supervision (OTS), Treasury.

ACTION: Notice of information collections to be submitted to OMB for review and approval under the Paperwork Reduction Act.

SUMMARY: In accordance with the requirements of the Paperwork Reduction Act of 1995 (44 U.S.C. chapter 35), the OCC, the Board, the FDIC, and the OTS (the ''agencies'') may not conduct or sponsor, and the respondent is not required to respond to, an information collection unless it displays a currently valid Office of Management and Budget (OMB) control number. On September 11, 2007, the agencies, under the auspices of the Federal Financial Institutions Examination Council (FFIEC), requested public comment for 60 days on a proposal to extend, with revision, the Consolidated Reports of Condition and Income (Call Report) for banks and the Thrift Financial Report (TFR) for savings associations, which are currently approved collections of information that are collected quarterly. After considering the comments, the FFIEC and the agencies have modified some of the proposed changes, which will be implemented March 31, 2008, as proposed, but with the reporting of certain proposed new items optional for this initial report date.

DATES: Comments must be submitted on or before March 5, 2008.

ADDRESSES: Interested parties are invited to submit written comments to any or all of the agencies. All comments, which should refer to the OMB control number(s), will be shared among the agencies.

OCC: Communications Division, Office of the Comptroller of the Currency, Public Information Room, Mailstop 1–5, Attention: 1557–0081, 250 E Street, SW., Washington, DC 20219. In addition, comments may be sent by fax to (202) 874–4448, or by electronic mail to *regs.comments@occ.treas.gov*. You can inspect and photocopy the comments at the OCC's Public Information Room, 250 E Street, SW., Washington, DC 20219. You can make an appointment to inspect the comments by calling (202) 874–5043.

Board: You may submit comments, which should refer to ''Consolidated Reports of Condition and Income, 7100–0036,'' by any of the following methods:

- *Agency Web Site: http://www.federalreserve.gov.* Follow the instructions for submitting comments on the *http://www.federalreserve.gov/generalinfo/foia/ProposedRegs.cfm.*
- *Federal eRulemaking Portal: http://www.regulations.gov.* Follow the instructions for submitting comments.
- *E-mail: regs.comments@federalreserve.gov.* Include docket number in the subject line of the message.
- *Fax:* 202–452–3819 or 202–452–3102.
- *Mail:* Jennifer J. Johnson, Secretary, Board of Governors of the Federal Reserve System, 20th Street and Constitution Avenue, NW., Washington, DC 20551.

All public comments are available from the Board's Web site at *http://www.federalreserve.gov/generalinfo/foia/ProposedRegs.cfm* as submitted, unless modified for technical reasons. Accordingly, your comments will not be edited to remove any identifying or contact information. Public comments may also be viewed electronically or in paper in Room MP–500 of the Board's Martin Building (20th and C Streets, NW.) between 9 a.m. and 5 p.m. on weekdays.

FDIC: You may submit comments, which should refer to ''Consolidated Reports of Condition and Income, 3064–0052,'' by any of the following methods:

• *http://www.FDIC.gov/regulations/laws/federal/notices.html.*

• *E-mail: comments@FDIC.gov.* Include ''Consolidated Reports of Condition and Income, 3064–0052'' in the subject line of the message.

• *Mail:* Valerie J. Best (202–898–3812), Supervisory Counsel, Attn: Comments, Room F–1070, Federal Deposit Insurance Corporation, 550 17th Street, NW., Washington, DC 20429.

• *Hand Delivery:* Comments may be hand delivered to the guard station at the rear of the 550 17th Street Building (located on F Street) on business days between 7 a.m. and 5 p.m.

Public Inspection: All comments received will be posted without change to *http://www.fdic.gov/regulations/laws/federal/notices.html* including any personal information provided. Comments may be inspected at the FDIC Public Information Center, Room E–1002, 3501 Fairfax Drive, Arlington, VA 22226, between 9 a.m. and 5 p.m. on business days.

OTS: You may submit comments, identified by ''1550–0023 (TFR: March 2008 Revisions),'' by any of the following methods:

• *E-mail address: infocollection.comments@ots.treas.gov.* Please include ''1550–0023 (TFR: March 2008 Revisions)'' in the subject line of the message and include your name and telephone number in the message.

• *Fax:* (202) 906–6518.

• *Mail:* Information Collection Comments, Chief Counsel's Office, Office of Thrift Supervision, 1700 G Street, NW., Washington, DC 20552, Attention: ''1550–0023 (TFR: March 2008 Revisions).''

• Hand Delivery/Courier: Guard's Desk, East Lobby Entrance, 1700 G Street, NW., from 9 a.m. to 4 p.m. on business days, Attention: Information Collection Comments, Chief Counsel's Office, Attention: ''1550–0023 (TFR: March 2008 Revisions).''

Instructions: All submissions received must include the agency name and OMB Control Number for this information collection. All comments received will be posted without change to the OTS Internet Site at *http://www.ots.treas.gov/pagehtml.cfm?catNumber=67&an=1,* including any personal information provided.

Docket: For access to the docket to read background documents or comments received, go to *http://www.ots.treas.gov/pagehtml.cfm?catNumber=67&an=1.* In addition, you may inspect comments at the Public Reading Room, 1700 G Street, NW., by appointment. To make an appointment for access, call (202) 906–5922, send an e-mail to *public.info@ots.treas.gov,* or send a facsimile transmission to (202) 906–7755. (Prior notice identifying the materials you will be requesting will assist us in serving you.) We schedule appointments on business days between 10 a.m. and 4 p.m. In most cases, appointments will be available the next business day following the date we receive a request.

Additionally, commenters may send a copy of their comments to the OMB desk officer for the agencies by mail to the Office of Information and Regulatory Affairs, U.S. Office of Management and Budget, New Executive Office Building, Room 10235, 725 17th Street, NW., Washington, DC 20503, or by fax to (202) 395–6974.

FOR FURTHER INFORMATION CONTACT: For further information about the revisions discussed in this notice, please contact any of the agency clearance officers whose names appear below. In addition, copies of the Call Report forms can be obtained at the FFIEC's Web site (*http://www.ffiec.gov/ffiec_report_forms.htm*). Copies of the TFR can be obtained from the OTS's Web site (*http://www.ots.treas.gov/main.cfm?catNumber=2&catParent=0).*

OCC: Mary Gottlieb, OCC Clearance Officer, (202) 874–5090, Legislative and Regulatory Activities Division, Office of the Comptroller of the Currency, 250 E Street, SW., Washington, DC 20219.

Board: Michelle E. Shore, Federal Reserve Board Clearance Officer, (202) 452–3829, Division of Research and Statistics, Board of Governors of the Federal Reserve System, 20th and C Streets, NW., Washington, DC 20551. Telecommunications Device for the Deaf (TDD) users may call (202) 263–4869.

FDIC: Valerie J. Best, Supervisory Counsel, (202) 898–3812, Legal Division, Federal Deposit Insurance Corporation, 550 17th Street, NW., Washington, DC 20429.

OTS: Ira L. Mills, OTS Clearance Officer, at *Ira.Mills@ots.treas.gov*, (202) 906–6531, or facsimile number (202) 906–6518, Litigation Division, Chief Counsel's Office, Office of Thrift Supervision, 1700 G Street, NW., Washington, DC 20552.

SUPPLEMENTARY INFORMATION: The agencies are requesting OMB approval to revise and extend for three years the Call Report and the TFR, which are currently approved collections of information.

1. *Report Title:* Consolidated Reports of Condition and Income (Call Report).

Form Number: Call Report: FFIEC 031 (for banks with domestic and foreign offices) and FFIEC 041 (for banks with domestic offices only).

Frequency of Response: Quarterly.

Affected Public: Business or other for-profit.

OCC:

OMB Number: 1557–0081.

Estimated Number of Respondents: 1,750 national banks.

Estimated Time per Response: 45.42 burden hours.

Estimated Total Annual Burden: 317,967 burden hours.

Board

OMB Number: 7100–0036.

Estimated Number of Respondents: 885 state member banks.

Estimated Time per Response: 52.07 burden hours.

Estimated Total Annual Burden: 184,328 burden hours.

FDIC

OMB Number: 3064–0052.

Estimated Number of Respondents: 5,199 insured state nonmember banks.

Estimated Time per Response: 36.16 burden hours.

Estimated Total Annual Burden: 751,983 burden hours.

The estimated time per response for the Call Report is an average that varies by agency because of differences in the composition of the institutions under each agency's supervision (e.g., size distribution of institutions, types of activities in which they are engaged, and existence of foreign offices). The average reporting burden for the Call Report is estimated to range from 16 to 635 hours per quarter, depending on an individual institution's circumstances.

2. *Report Title:* Thrift Financial Report (TFR).

Form Number: OTS 1313 (for savings associations).

Frequency of Response: Quarterly.

Affected Public: Business or other for-profit.

OTS

OMB Number: 1550–0023.

Estimated Number of Respondents: 838 savings associations.

Estimated Time per Response: 36.50 burden hours.

Estimated Total Annual Burden: 193,881 burden hours.

General Description of Reports

These information collections are mandatory: 12 U.S.C. 161 (for national banks), 12 U.S.C. 324 (for state member banks), 12 U.S.C. 1817 (for insured state nonmember commercial and savings

banks), and 12 U.S.C. 1464 (for savings associations). Except for selected data items, these information collections are not given confidential treatment.

Abstract

Institutions submit Call Report and TFR data to the agencies each quarter for the agencies' use in monitoring the condition, performance, and risk profile of individual institutions and the industry as a whole. Call Report and TFR data provide the most current statistical data available for evaluating institutions' corporate applications, for identifying areas of focus for both on-site and off-site examinations, and for monetary and other public policy purposes. The agencies use Call Report and TFR data in evaluating interstate merger and acquisition applications to determine, as required by law, whether the resulting institution would control more than ten percent of the total amount of deposits of insured depository institutions in the United States. Call Report and TFR data are also used to calculate all institutions' deposit insurance and Financing Corporation assessments, national banks' semiannual assessment fees, and the OTS's assessments on savings associations.

Current Actions

I. Overview

On September 11, 2007, the agencies requested comment on proposed revisions to the Call Report and the TFR (72 FR 51814). All four agencies proposed to revise the Call Report and TFR instructions for reporting daily average deposit data by newly insured institutions for deposit insurance assessment purposes to conform the instructions with the FDIC's assessment regulations (12 CFR Part 327).

In the same **Federal Register** notice, the OCC, the Board, and the FDIC (the banking agencies) also proposed to implement a number of other changes to the Call Report requirements. These Call Report changes included several related to 1–4 family residential mortgage loans such as separately reporting interest and fee income and quarterly averages for 1–4 family residential mortgages and all other real estate loans and adding new items for restructured troubled mortgages and mortgage loans in process of foreclosure. The banking agencies proposed to expand Call Report Schedule RC-P on closed-end 1–4 family residential mortgage banking activities, which is completed by larger banks and smaller banks with a significant level of such activities, to include originations, purchases, and sales of open-end mortgages as well as closed-end and open-end mortgage loan repurchases and indemnifications during the quarter. The Call Report's trading account definition was proposed to be modified in response to the creation of a fair value option in generally accepted accounting principles (GAAP). Revisions were proposed to Call Report Schedule RC-Q, which collects data on fair value measurements for trading assets and liabilities and other assets and liabilities accounted for under a fair value option, and certain other schedules, including the loan schedule (Schedule RC-C), to enhance the information available on instruments accounted for under this option. Other revisions were also proposed to be made to the schedule on trading assets and liabilities (Schedule RC-D). The banking agencies also proposed to clarify the Call Report instructions for reporting credit derivative data in the risk-based capital schedule (Schedule RC-R) and to make a corresponding change to the schedule itself; to change the threshold for reporting significant items of other noninterest income and expense in the explanations schedule (Schedule RI-E); and to conform the instructions for reporting fully insured brokered deposits in Schedule RC-E, Deposit Liabilities, to the instructions for reporting time deposits in this schedule. Finally, the banking agencies requested comment on a plan to discontinue the mailing of paper Call Report forms and instructions to banks.

The revisions to the Call Report and the TFR set forth herein, which were approved for publication by the FFIEC, were proposed to take effect as of March 31, 2008. After considering the comments received on the proposal, the proposed revision to the Call Report and TFR instructions for reporting daily average deposit data by newly insured institutions for deposit insurance assessment purposes would be implemented March 31, 2008, as proposed. With respect to the remaining proposed revisions, which apply only to the Call Report, the banking agencies approved certain modifications to them to address concerns expressed by commenters. The banking agencies will move forward with the modified reporting changes on March 31, 2008, although the reporting of certain proposed new items will be optional for this initial report date and will be required beginning June 30, 2008. For the March 31, 2008, report date, institutions may provide reasonable estimates for any new or revised Call Report item required to be reported as of that date for which the requested information is not readily available. For the new Call Report items that are optional as of the March 31, 2008, report date, this same policy on the use of reasonable estimates will apply to these new items as of the June 30, 2008, report date.

The agencies collectively received comments from nine respondents: seven banking organizations, one bankers' organization, and a government agency. None of the commenters addressed all of the aspects of the proposal. Rather, individual respondents addressed certain specific proposed changes. No comments were received on the instructional change for reporting daily average deposit data by newly insured institutions (the only proposed revision that also applied to the TFR), the proposed new items for restructured troubled 1–4 family residential mortgages and for the fair value and unpaid principal balance by loan category of loans held for sale or investment that are measured at fair value, the revised reporting threshold for the trading assets and liabilities schedule, the revisions to the regulatory capital schedule and instructions for credit derivatives, the conformity changes for brokered deposits within the deposits schedule, and the proposed discontinuance of mailing Call Report forms and instructions. In contrast, the three banking organizations that commented on the proposed modification of the Call Report's trading account definition all expressed support for this definitional change. Thus, all of the revisions discussed in this paragraph will be implemented as proposed.

With respect to the other proposed revisions to the Call Report, some commenters recommended that certain changes be phased in rather than being implemented as of March 31, 2008, because the information was not readily available in a form that would facilitate reporting in proposed new data items. Some commenters also requested clarifications of terminology used to describe certain proposed items or the amounts to be reported in these items. One commenter opposed the proposed collection of a two-way breakdown of the difference between the fair value and the unpaid principal balance of loans measured at fair value under a fair value option, which would disclose the portion attributable to changes in credit risk since origination and the portion attributable to all other factors. Another commenter supported proposed changes to the Call Report schedule on fair value measurements, but recommended that the schedule's focus on disclosures

about such measurements for instruments to which a fair value option has been applied be broadened to cover all instruments measured at fair value. One commenter suggested the addition of a *de minimis* dollar amount to the proposed percentage threshold for disclosures of components of other noninterest income and expense. Finally, the proposal contained a footnote indicating that the banking agencies are considering a separate proposal to incorporate the FDIC's Summary of Deposits report into the Call Report, a proposed change about which two commenters voiced concerns. This separate proposal remains under consideration and would be subject to notice and comment before it could be implemented.

The banking agencies' responses to the comments received and a discussion of the related Call Report revisions are presented below.

II. Discussion of Revisions

A. Reporting of Data for Deposit Insurance Assessments in the Call Report and TFR by Newly Insured Institutions

On March 31, 2007, the banking agencies and the OTS introduced a revision and reduction in the overall reporting requirements related to deposit insurance assessments in Call Report Schedule RC–O and TFR Schedule DI, respectively, that was intended to simplify regulatory reporting. As part of these revised overall reporting requirements, the agencies provided an interim period covering the March 31, 2007, through December 31, 2007, report dates during which each institution had the option to submit its Call Reports or TFRs using either the current or revised formats for reporting the data used to measure their assessment base. The revised reporting format will take effect for all institutions on March 31, 2008, at which time the current reporting format will be eliminated.

The instructions issued in March 2007 for the revised reporting format state that an institution that becomes newly insured on or after April 1, 2008, would be required to report daily average balances beginning in the first quarterly Call Report or TFR that it files. However, these instructions do not conform to the language in Section 327.5(a)(1) of the FDIC's assessment regulations (12 CFR 327.5(a)(1)) with respect to their treatment of institutions that become insured between April 1, 2007, and March 31, 2008. Therefore, the agencies proposed to revise the instructions to Call Report Schedule RC–O and TFR Schedule DI to require an institution that becomes insured after March 31, 2007, but on or before March 31, 2008, to begin reporting daily average balances in its Call Report or TFR for the March 31, 2008, report date. The agencies received no comments on this proposed reporting revision, which will be implemented as proposed.

B. Call Report Revisions Related to 1–4 Family Residential Mortgage Loans

Since year-end 2000, commercial bank holdings of 1–4 family residential mortgage loans in domestic offices have increased nearly 108 percent to more than $1.9 trillion. Nearly 98 percent of all banks hold such mortgages. 1–4 family residential mortgages now represent the single largest category of loans held by commercial banks, surpassing commercial and industrial loans as the largest category in 2002. As a percentage of total loans and leases at commercial banks, 1–4 family residential mortgages have grown from 24 percent at year-end 2000 to 32 percent at year-end 2006. Similarly, 1–4 family residential mortgages have increased from less than 15 percent of total assets to nearly 19 percent of total assets during this period. During the first quarter of 2007, bank originations and purchases of closed-end 1–4 family residential mortgages for resale exceeded $287 billion.

The use of nontraditional residential mortgage products has grown and the number of banks that have offered such products has increased. Also, the volume of 1–4 family residential mortgage loans extended to subprime borrowers has increased. At the same time, home prices have stagnated or declined in many areas of the country. Foreclosure rates have substantially increased along with an increase in restructured loans. The higher concentration of 1–4 family residential mortgages across the industry and the changing risk profile of the loans with which banks are associated in some capacity has led the banking agencies to evaluate the information they collect about such loans in the Call Report. Therefore, the banking agencies will proceed with their proposed Call Report changes that are intended to enhance the ability to monitor the nature and extent of banks' involvement with 1–4 family residential mortgage loans as originators, holders, sellers, and servicers of such loans. Commenters requested a six-month reporting delay on some of the new items and asked the banking agencies to clarify for reporting purposes what principal amount funded means when reporting on open-end mortgages. The banking agencies considered these suggestions and made a number of changes in response.

1. Interest and Fee Income and Quarterly Average

Currently, banks report the total amount of interest and fee income on their ''Loans secured by real estate'' (in domestic offices) in the Call Report income statement (Schedule RI, item 1.a.(1)(a) on the FFIEC 031 and item 1.a.(1) on the FFIEC 041) and the quarterly average for these loans (in domestic offices) in the quarterly averages schedule (Schedule RC–K, item 6.a.(2) on the FFIEC 031 and item 6.b on the FFIEC 041). The banking agencies proposed to split these existing income statement and quarterly average items into separate items for the interest and fee income on and the quarterly averages of ''Loans secured by 1–4 family residential properties'' and ''All other loans secured by real estate.''

One banking organization commented on these additions to the Call Report. This bank noted that these additions would require changes to its loan processing and accounting systems, which will affect loan personnel, but that it is possible to implement these changes. The banking agencies will proceed to add these items to the Call Report as proposed.

2. Restructured Mortgages

Banks currently report information on the amount of loans whose terms have been modified, because of the borrower's financial difficulties, to provide for a reduction of either interest or principal. When such restructured loans are past due 30 days or more or are in nonaccrual status in relation to their modified terms as of the report date, they are reported in Schedule RC–N, Memorandum item 1. In contrast, when such restructured loans are less than 30 days past due and are not otherwise in nonaccrual status, that is, when they are deemed to be in compliance with their modified terms as discussed in the Call Report instructions, banks report the amount of these loans in the Call Report loan schedule (Schedule RC–C, part I, Memorandum item 1). However, the instructions advise banks to exclude restructured loans secured by 1–4 family residential properties from these Memorandum items.

This exclusion was incorporated into the Call Report instructions because the original disclosure requirements for troubled debt restructurings under GAAP provided that creditors need not disclose information on restructured real estate loans secured by 1–4 family

residential properties.[1] However, this exemption from disclosure under GAAP has since been eliminated.[2] Accordingly, the banking agencies proposed to add a new Memorandum item to Schedule RC–C, part I, for ''Loans secured by 1–4 family residential properties (in domestic offices)'' that have been restructured and are in compliance with their modified terms and a new Memorandum item to Schedule RC–N for restructured ''Loans secured by 1–4 family residential properties (in domestic offices)'' that under their modified terms are past due 30 days or more or in nonaccrual status.

No public comments were received on these additions to the Call Report. The banking agencies will proceed to add these items to the Call Report as proposed.

3. Mortgages in Foreclosure

The banking agencies currently collect data on the amount of loans secured by 1–4 family residential properties that are past due 30 days or more or are in nonaccrual status (Schedule RC–N, item 1.c) and on the amount of foreclosed 1–4 family residential properties held by the bank (Schedule RC–M, item 3.b.(3)). However, regardless of whether the bank owns the loans or services the loans for others, banks do not report the volume of 1–4 family residential mortgage loans that are in process of foreclosure, an indicator of potential additions to the bank's ''other real estate owned'' in the near term.

The banking agencies proposed to add two new Memorandum items for the amount of 1–4 family residential mortgage loans owned by the bank and serviced by the bank that are in foreclosure as of the quarter-end report date. Mortgage loans in foreclosure would be those for which the legal process of foreclosure has been initiated, but for which the foreclosure process has not yet been resolved at quarter-end.[3] These Memorandum items would be added to the Call Report loan schedule (Schedule RC–C, part I) and the servicing, securitization, and asset sale activities schedule (Schedule RC–S), with the carrying amount (before any applicable allowance for loan and leases losses) reported in the former Memorandum item and the outstanding principal amount reported in the latter Memorandum item. Reporting mortgage loans as being in process of foreclosure will not exempt those loans owned by the bank from being reported as past due or nonaccrual, as appropriate, in Call Report Schedule RC–N, and will not exempt those loans serviced by the bank that are reported in Schedule RC–S, item 1, from being reported as past due, as appropriate, in that schedule.

The bankers' organization provided comments on these proposed items and three banking organizations supported their comments. The commenters did not object to reporting these items but requested that the data collection be delayed six months because the data are not currently readily available. The banking agencies elected to go forward with collecting the new data items as proposed because of the substantial increase in the number of foreclosures reported by the industry and the potentially higher number of foreclosures in the next couple of years. Given current conditions in the residential mortgage market, the agencies have a strong supervisory interest in being able to evaluate foreclosure data and obtain data needed as the starting point for trend analyses at the earliest possible date. As with all new Call Report items, banks may report reasonable estimates for the amounts of loans in foreclosure for the first reporting period (March 31, 2008) using the best information available.

4. Open-end 1–4 Family Residential Mortgage Banking Activities

Banks with $1 billion or more in total assets and smaller banks that meet certain criteria currently provide data on originations, purchases, and sales of closed-end 1–4 family residential mortgage loans during the quarter arising from their mortgage banking activities in domestic offices in Call Report Schedule RC–P. These banks also report the amount of closed-end 1–4 family residential mortgage loans held for sale at quarter-end as well as the noninterest income for the quarter from the sale, securitization, and servicing of these mortgage loans. Data (other than for noninterest income) is provided separately for first lien and junior lien mortgages in Schedule RC–P. About 650 banks complete Schedule RC–P, less than 300 of which have total assets of less than $1 billion. However, this information does not provide a complete picture of banks' mortgage banking activities since it excludes open-end 1–4 family residential mortgages extended under lines of credit. From year-end 2001 to year-end 2006, bank holdings of 1–4 family residential mortgage loans extended under lines of credit more than tripled to nearly $470 billion. Accordingly, the banking agencies proposed to expand the scope of Schedule RC–P to include separate items for originations, purchases, and sales of open-end 1–4 family residential mortgages during the quarter; the amount of such mortgages held for sale at quarter-end; and noninterest income for the quarter from the sale, securitization, and servicing of open-end residential mortgages. When reporting the originations, purchases, sales, and mortgages held for sale, banks would report both the total commitment under the line of credit and the principal amount funded under the line. For banks with less than $1 billion in total assets, the criteria used to determine whether Schedule RC–P must be completed would be modified to include both closed-end and open-end 1–4 family residential mortgage banking activities.

One banking organization and the bankers' organization provided comments on these proposed revisions and three other banking organizations supported the latter's comments. The bankers' organization did not object to reporting the new items but requested that the data collection be delayed six months because of the time needed to identify and capture the unused commitment amounts and outstanding principal balances. The banking agencies agreed not to require the new open-end mortgage data to be reported until the June 30, 2008, Call Report, with reporting of these data optional in the March 31, 2008, Call Report, if the information is available.

The banking organization encouraged the banking agencies to clearly define the terms ''total commitment under the lines of credit'' and the ''principal amount funded under the lines of credit'' as they relate to originations of open-end 1–4 family residential mortgages during the quarter because different interpretations could result in the absence of clear instructions. The organization recommended that ''total commitment'' be defined as the initial committed balance made to customers on newly established open-end lines of credit and ''principal amount funded'' be defined as initial fundings made to customers on newly established lines. The banking agencies agree on the

[1] See Financial Accounting Standards Board Statement No. 15, *Accounting by Debtors and Creditors for Troubled Debt Restructurings,* footnote 25.

[2] 2 See Financial Accounting Standards Board Statement No. 114, *Accounting by Creditors for Impairment of a Loan,* paragraph 22(f).

[3] For banks that participate in the Mortgage Bankers Association's (MBA) National Delinquency Survey, the time at which mortgage loans would become reportable as being in process of foreclosure for Call Report purposes would be the same time at which mortgage loans become reportable as being in ''foreclosure inventory'' for MBA survey purposes (although the dollar amount of such loans would be reported in the Call Report while the number of such loans are reported for MBA survey purposes).

necessity for clear definitions of these terms. Thus, the instructions for reporting the ''total commitment'' would define it as the total amount of the lines of credit granted to customers at the time the open-end credits were originated, which is consistent with the banking organization's recommendation. For retail and wholesale originations of such open-end loans, the instructions would define ''principal amount funded'' as the initial fundings made to customers on newly established lines of credit. In addition, for open-end loans purchased, sold, held for sale, and (as discussed in the following section) repurchased or indemnified, the ''principal amount funded'' would be defined as the principal balance outstanding of loans extended under lines of credit at the transaction date or at quarter-end, as appropriate.

5. Mortgage Repurchases and Indemnifications

As a result of its 1–4 family residential mortgage banking activities, a bank may be obligated to repurchase mortgage loans that it has sold or otherwise indemnify the loan purchaser against loss because of borrower defaults, loan defects, other breaches of representations and warranties, or for other reasons, thereby exposing the bank to additional risk. Such information is not currently captured in Call Report Schedule RC–P. Therefore, the banking agencies proposed to add four new items to Schedule RC–P to collect data on mortgage loan repurchases and indemnifications during the quarter. For both closed-end first lien and closed-end junior lien 1–4 family residential mortgages, banks would report the outstanding principal amount of mortgages repurchased or indemnified as of the date of repurchase or indemnification. For open-end 1–4 family residential mortgages, banks would report both the total commitment under the line of credit and the principal amount funded under the line for mortgages repurchased or indemnified.

The banking agencies received comments from one banking organization and the bankers' organization on these additions to the Call Report, with three other banking organizations supporting the bankers' organization's comments. The banking organization sought clarification as to the scope of indemnifications, particularly with respect to whether indemnifications that consisted of reimbursements of legal fees or administrative costs were expected to be reported. The agencies will clarify in the instructions that indemnifications are limited to reimbursements for credit losses, including reimbursements for losses arising from sales of real estate collateral. The bankers' organization also requested a clarification involving terminology, questioning whether, if there is a difference between the book value of a loan and its principal balance, which amount banks are expected to report. The banking agencies reiterate that the amount to be reported for closed-end loans is the mortgages' outstanding principal amount as of the date of repurchase or indemnification, not the book value of these mortgages. For open-end residential mortgage loans, the concept of ''principal amount funded'' is discussed in the preceding section.

Finally, also as discussed in the preceding section, the new items on repurchases and indemnifications of open-end loans will not be required to be reported until the June 30, 2008, report date, with reporting of these data optional as of the March 31, 2008, report date, if the information is available. Subject to these modifications and clarifications to their original proposal, the banking agencies will proceed to implement these new items on repurchases and indemnifications.

C. Call Report Data on Trading Assets and Liabilities and Other Assets and Liabilities Accounted for Under a Fair Value Option

1. Reporting of Assets and Liabilities Under the Fair Value Option as Trading

On February 15, 2007, the Financial Accounting Standards Board (FASB) issued Statement No. 159, *The Fair Value Option for Financial Assets and Financial Liabilities* (FAS 159), which is effective for fiscal years beginning after November 15, 2007. Earlier adoption of FAS 159 was permitted as of the beginning of an earlier fiscal year, provided the bank (i) also adopts all of the requirements of FASB Statement No. 157, *Fair Value Measurements* (FAS 157) at the early adoption date of FAS159; (ii) has not yet issued a financial statement or submitted Call Report data for any period of that fiscal year; and (iii) satisfies certain other conditions. Thus, a bank with a calendar year fiscal year may have voluntarily adopted FAS 159 as of January 1, 2007. Changes in the fair value of financial assets and liabilities to which the fair value option is applied are reported in current earnings as is currently the case for trading assets and liabilities. Since the fair value option standard allows a bank to elect fair value measurement through earnings for financial assets and financial liabilities, the banking agencies understand that some institutions would like to reclassify certain loans elected to be accounted for under the fair value option as trading assets. The Call Report instructions currently do not allow loans held for sale to be reported as trading assets.

Under FAS 159, all securities within the scope of FASB Statement No. 115, *Accounting for Certain Investments in Debt and Equity Securities* (FAS 115), that a bank has elected to report at fair value under a fair value option should be classified as trading securities. Recognizing the provisions of FAS 159, the banking agencies proposed the following clarification to the Call Report instructions, including the Call Report Glossary entry for ''Trading Account.'' Banks may classify assets (other than securities within the scope of FAS 115 for which a fair value option is elected) and liabilities as trading if the bank applies fair value accounting, with changes in fair value reported in current earnings, and manages these assets and liabilities as trading positions, subject to the controls and applicable regulatory guidance related to trading activities.

Three banking organizations provided comments in support of the proposed expanded definition of the trading account to permit the classification of certain loans as trading. The banking agencies will proceed with the revised definition of trading account as proposed.

2. Revision of Certain Fair Value Measurement and Fair Value Option Information in the Call Report

Effective for the March 31, 2007, report date, the banking agencies started collecting information on certain assets and liabilities measured at fair value on Call Report Schedule RC–Q, Financial Assets and Liabilities Measured at Fair Value. Schedule RC–Q was intended to be consistent with the disclosure and other requirements contained in FAS 157 and FAS 159. Based on the banking agencies' review of initial industry practice and inquiries from banks, the agencies have determined that industry practice for preparing and reporting FAS 157 disclosures has evolved differently than the process for the information collected on Schedule RC–Q. This divergence has resulted in unnecessary burden and less transparency for the affected banks in two material respects.

First, Schedule RC–Q does not allow banks to separately identify each of the three levels of fair value measurements prescribed by FAS 157. The banking agencies included Level 1 fair value

measurements in the total fair value amount in column A of Schedule RC–Q as a means of minimizing reporting burden. However, the omission of a separate column on Schedule RC–Q for Level 1 fair value measurements has increased the time bank managements spend preparing and reviewing Schedule RC–Q because the fair value disclosures on Schedule RC–Q differ from those in the banks' other financial statements. Second, Schedule RC–Q does not allow banks to separately identify any amounts by which the gross fair values of assets and liabilities reported for Level 2 and 3 fair value measurements included in columns B and C have been offset (netted) in the determination of the total fair value reported on the Call Report balance sheet (Schedule RC), which is disclosed in column A of Schedule RC–Q. Based on a review of industry practice, these disclosures are commonly made in the banks' other financial statements.

To reduce confusion related to the differences in industry practice and the Call Report, the banking agencies proposed to add two columns to Schedule RC–Q to allow banks to report any netting adjustments and Level 1 fair value measurements separately in a manner consistent with industry practice. The new columns would be captioned column B, Amounts Netted in the Determination of Total Fair Value Reported on Schedule RC, and column C, Level 1 Fair Value Measurements. Existing column B, Level 2 Fair Value Measurements, and column C, Level 3 Fair Value Measurements, of Schedule RC–Q would be recaptioned as columns D and E, respectively. Column A would remain unchanged.

One commenter, a banking organization, offered comments on the proposed changes to Schedule RC–Q. The commenter supported the addition of the two new columns to the schedule. The commenter also suggested the banking agencies amend the scope of Schedule RC–Q to collect information on all assets and liabilities measured at fair value pursuant to FAS 157 rather than the current scope, which collects information primarily based on a bank's election to measure assets at fair value under a fair value option and only includes some of the assets and liabilities covered by FAS 157. The banking agencies recognize that a significant number of banks have only recently adopted FAS 157 and are working through a number of implementation issues. In addition, the FASB recently proposed a 1-year delay in the effective date of FAS 157 for all nonfinancial assets and nonfinancial liabilities, except those that are recognized or disclosed at fair value in the financial statements on a recurring basis. In light of these factors, the banking agencies determined it would not be prudent, at this time, to modify the scope of the Schedule RC–Q to include all assets and liabilities covered by FAS 157 as suggested by the commenter. The banking agencies will proceed with the addition of the two additional columns to Schedule RC–Q as proposed.

The banking agencies also considered other types of information that will be necessary to effectively assess the safety and soundness of banks that utilize the fair value option pursuant to FAS 159. Based on this assessment, the banking agencies proposed to amend certain other Call Report schedules to improve the agencies' ability to make comparisons among entities that elect a fair value option and those that do not. The primary focus of these proposed changes is to enhance the information provided by banks that elect the fair value option for loans. The proposed changes are based on the principal objectives for disclosures and the required disclosures in FAS 159, which were intended to provide ''information to enable users to understand the differences between fair value and contractual cash flows'' and to provide information ''that would have been disclosed if the fair value option had not been elected.''

Specifically, the banking agencies proposed to add items to Schedule RC–C, part I, Loans and Leases, to collect data on the loans reported in this schedule that are measured at fair value under a fair value option: (1) The fair value of such loans measured by major loan category, (2) the unpaid principal balance of such loans by major loan category, and (3) the aggregate amount of the difference between the fair value and the unpaid principal balance of such loans that is attributable (a) to changes in the credit risk of the loan since its origination and (b) to all other factors. Because Schedule RC–C, part I, only provides data on loans held for investment and for sale, the banking agencies proposed to add the same items to Schedule RC–D, Trading Assets and Liabilities, for loans measured at fair value under a fair value option that are designated as held for trading. The banking agencies also proposed to add a new item to Schedule RC–D for ''Other trading liabilities'' in recognition of a bank's ability to elect to measure certain liabilities at fair value in accordance with FAS 159 and designate them as held for trading.

The banking agencies proposed to add two items to Schedule RC–N, Past Due and Nonaccrual Loans, Leases, and Other Assets, to collect data on the fair value and unpaid principal balance of loans measured at fair value under a fair value option that are past due or in nonaccrual status. The items would follow the existing three column breakdown on Schedule RC–N that banks utilize to report all other past due and nonaccrual loans. Since trading assets are not currently reported on Schedule RC–N, the banking agencies proposed to add similar items to Schedule RC–D to collect the total fair value and unpaid principal balance of loans 90 days or more past due that are classified as trading. Finally, the banking agencies proposed to add items to Schedule RI, Income Statement, to collect information on: (1) Net gains (losses) recognized in earnings on assets that are reported at fair value under a fair value option; (2) estimated net gains (losses) on loans attributable to changes in instrument-specific credit risk; (3) net gains (losses) recognized in earnings on liabilities that are reported at fair value under a fair value option; (4) estimated net gains (losses) on liabilities attributable to changes in the instrument-specific credit risk.

Two banking organizations and the bankers' organization provided comments on the proposed changes. One banking organization opposed the proposal to collect information on Schedules RC–C and RC–D on the aggregate amount of the difference between the fair value and the unpaid principal balance of loans measured at fair value under a fair value option attributable to (a) changes in the credit risk of the loan since its origination and (b) all other factors. The banking organization indicated the proposed information may exist in theory but that banks do not have the ability to readily and reliably produce this information. The banking agencies reconsidered the proposal and concur with the commenter's assessment of banks' ability to readily and reliably produce this information. As a result, the banking agencies will not implement the proposed change.

One banking organization opposed the proposed breakouts on Schedule RC–D of the fair value and the unpaid principal balance of loans measured at fair value under a fair value option by major loan category indicating the information was excessive and burdensome to collect for loans designated as trading and would require changes to the bank's trading systems. The banking agencies' safety and soundness objective for collecting this information is to make comparisons among entities that elect a fair value

option for loans and those that do not. This objective can not be achieved if the information collected on Schedules RC–C and RC–D is not comparable. Since banks have considerable experience reporting information by major loan category as required by Schedule RC–C and are only now able to report loans under a fair value option on Schedule RC–D, the banking agencies determined it would be less burdensome to adapt the proposed loan breakouts on Schedule RC–D to the current breakouts on Schedule RC–C than to develop a unique format for reporting loans under a fair value option in both Schedules RC–C and RC–D as inferred by the commenter. The banking agencies will proceed with the breakouts for loans reported under a fair value option on Schedule RC–D as proposed.

The banking organization also questioned whether the banking agencies should collect separate items on Schedule RI for the net gains (losses) recognized in earnings on assets that are reported at fair value under a fair value option and the estimated net gains (losses) on loans attributable to changes in instrument-specific credit risk. Similarly, the commenter questioned whether the agencies should collect separate items on Schedule RI for the net gains (losses) recognized in earnings on liabilities that are reported at fair value under a fair value option and the estimated net gains (losses) on liabilities attributable to changes in the instrument-specific credit risk. The commenter suggested the agencies clarify what changes other than credit risk would be reported in net gains (losses) on assets and liabilities reported at fair value under a fair value option that would warrant a separate breakout for net gains (losses) on loans and liabilities for instrument-specific credit risk. The content of the proposed items for Schedule RI are the same as those mandated by the disclosure requirements of paragraphs 19(a), (c)(1), and (d)(1) of FAS 159. However, to reduce burden, the banking agencies grouped the requirements of subparagraph (a) into net gains (losses) recognized in earnings on assets that are reported at fair value under a fair value option and net gains (losses) recognized in earnings on liabilities that are reported at fair value under a fair value option rather than requiring separate breakouts for the amount of gains and losses on fair value option items for each line item on a bank's balance sheet as required by paragraph 19(a). Thus, the banking agencies' rationale for collecting the separate breakouts on Schedule RI is the same as FAS 159, to facilitate comparisons between banks that adopt the fair value option and those that do not. The banking agencies will proceed with the proposed breakouts on Schedule RI for net gains (losses) recognized in earnings on assets and liabilities reported under a fair value option and the estimated net gains (losses) on loans and liabilities reported under a fair value option attributable to changes in instrument-specific credit risk as proposed.

The bankers' organization recommended a six month delay in the effective date of the proposal to collect information on Schedule RC–N on the fair value and unpaid principal balance of loans measured at fair value under a fair value option that are past due or in nonaccrual status and Schedule RC–D on the total fair value and unpaid principal balance of loans 90 days or more past due. The commenter indicated the delay would give banks sufficient time to make changes to their systems to capture this information. The banking agencies agree that a delay would be advisable and will delay the implementation date of the proposed Schedule RC–N and RC–D items by 90 days, which will make the changes effective for the June 30, 2008, report date. However, the banking agencies will allow banks the option of submitting this information effective for the March 31, 2008, report date, if the information is available.

The banking agencies did not receive comments on the proposal to add items to Schedule RC–C, part I, Loans and Leases, to collect the fair value and unpaid principal balance of loans measured at fair value under a fair value option by major loan category. The banking agencies also did not receive comments on the proposal to add a new item to Schedule RC–D for ''Other trading liabilities.'' The banking agencies will proceed with these changes as proposed.

3. Other Revisions to the Call Report Information on Trading Assets and Liabilities

The banking agencies proposed three revisions to Schedule RC–D to enhance the agencies' ability to assess bank exposures to market, liquidity, credit, operational, and other risks posed by trading assets and liabilities and to appropriately assess the safety and soundness of banks with these exposures and banks with significant concentrations in trading assets and liabilities. First, the banking agencies proposed to eliminate the single line item for trading assets in foreign offices on the FFIEC 031 Call Report form and revise the schedule to include separate columns for the consolidated bank and for domestic offices. Second, the banking agencies proposed to change the reporting threshold for Schedule RC–D. As proposed, Schedule RC–D would be completed for any quarter when the quarterly average for trading assets in Schedule RC–K, item 7, was $2 million or more in any of the four preceding quarters. Third, the banking agencies proposed to require banks with average trading assets of $1 billion or more in any of the four preceding quarters to provide additional detail on trading assets and liabilities currently included in certain trading asset and liability categories. These banks would provide additional breakouts for asset-backed securities by major category, collateralized debt obligations (both synthetic and non-synthetic), retained interests in securitizations, equity securities (both with and without readily determinable fair values), and loans held pending securitization. In addition, these banks would be required to provide a description of and report the fair value of any type of trading asset or liability in the ''Other trading assets'' and ''Other trading liabilities'' categories that is greater than $25,000 and exceeds 25 percent of the amount reported in that trading category.

One banking organization requested the banking agencies reconsider the proposed expansion of information for banks with average trading assets of $1 billion or more due to current systems limitations. The banking agencies assessed the systems challenges resulting from other regulatory initiatives at banking organizations with trading assets of $1 billion or more and determined a delay in the implementation date for these changes would be reasonable. The banking agencies will delay the implementation date of the proposed expanded information on Schedule RC–D items by 90 days, which will make the changes effective for the June 30, 2008, report date. However, the banking agencies will allow banks the option of submitting this information effective for the March 31, 2008 report date, if the information is available.

The banking agencies did not receive comments on the proposal to eliminate the single line item for trading assets in foreign offices on the FFIEC 031 Call Report form and revise the schedule to include separate columns for the consolidated bank and for domestic offices. The banking agencies also did not receive comments on the proposal to change the reporting threshold for Schedule RC–D. The banking agencies will proceed with these changes as proposed.

D. Reporting Credit Derivative Data for Risk-Based Capital Purposes in the Call Report

For credit derivative contracts that are covered by the banking agencies' risk-based capital standards, the Call Report instructions require banks to report these credit derivatives in item 52, ''All other off-balance sheet liabilities,'' of Schedule RC–R, Regulatory Capital, unless the credit derivatives represent recourse arrangements or direct credit substitutes, which are reported in one of the preceding items in the Derivatives and Off-Balance Sheet Items section of the schedule. This reporting approach was developed to enable banks that sold credit protection and held the credit derivative to apply a 100 percent risk weight to the notional amount consistent with the risk-based capital treatment of standby letters of credit and guarantees. At present, Schedule RC–R, item 54, ''Derivative contracts,'' specifically excludes credit derivatives and does not include a 100 percent risk weight column because the maximum risk weight on the counterparty credit risk charge for other types of derivatives is 50 percent. However, this reporting approach does not consider that some credit derivative positions are subject to a counterparty credit risk charge, which is calculated for other derivative positions in item 54, even if the credit derivatives are held by a bank that is subject to the market risk capital rules. The banking agencies proposed to modify the Call Report instructions for Schedule RC–R to allow the reporting of the credit equivalent amount of credit derivatives subject to the counterparty credit risk charge in item 54 of the schedule and to extend the existing 100 percent risk weight column in Schedule RC–R to item 54, ''Derivative contracts.''

The banking agencies did not receive comments on the proposed changes for credit derivatives in Schedule RC–R. However, upon further consideration of the reporting of such derivatives in Schedule RC–R, item 54, the banking agencies concluded that extending the 100 percent risk weight column to this item is not necessary. The instructions will indicate that credit derivatives entered into for trading purposes and subject to the market risk capital guidelines should be reported in item 54.

E. Revision of Reporting Threshold for Other Noninterest Income and Other Noninterest Expense in the Call Report

The banking agencies proposed to change the threshold for reporting detailed information on the components of other noninterest income and other noninterest expense as reported on Schedule RI–E, Explanations, items 1 and 2. Specifically, the banking agencies proposed to change the threshold to require banks to separately disclose the description and amount of any item included in Schedule RI, item 5.l, ''Other noninterest income'' that exceeds 3 percent of other noninterest income and any item included in Schedule RI, item 7.d, ''Other noninterest expense'' that exceeds 3 percent of other noninterest expense.

In addition, the banking agencies proposed to add one new preprinted caption for other noninterest income and four new preprinted captions for other noninterest expense to help banks comply with the disclosure requirements. As with the existing preprinted captions for other noninterest income and other noninterest expense, banks are only required to use these descriptions and provide the amounts for these components when the amounts included in other noninterest income or other noninterest expense exceed the reporting threshold. The new preprinted other noninterest income caption is bank card/credit card interchange fees. The new preprinted noninterest expense captions are accounting and auditing expenses, consulting and advisory expenses, automated teller machine (ATM) and interchange expenses, and telecommunications expenses.

Two banking organizations and the government agency provided comments on the proposed changes. The agency supported the additional new preprinted captions. One banking organization indicated the application of the new thresholds to the smaller base of other noninterest income or expense would result in their bank reporting amounts as small as $1,000 in the other noninterest income disclosures and $7,500 in the other noninterest expense disclosures. The commenter recommended the banking agencies establish a $50,000 floor to the reporting threshold to eliminate the reporting of de minimis amounts. The banking agencies recognize the merit of this request and will implement modified thresholds to require banks to separately disclose the description and amount of any item in other noninterest income that is greater than $25,000 and exceeds 3 percent of other noninterest income and any item included in other noninterest expense that is greater than $25,000 and exceeds 3 percent of other noninterest expense. The $25,000 amount is consistent with the threshold floors used for ''All other assets'' in Schedule RC–F, Other Assets, and ''All other liabilities'' in Schedule RC–G, Other Liabilities.

Another banking organization commented that they would have difficulty breaking out expenses incurred for multiple services provided by a third party vendor where separate charges for specific services would be burdensome to identify. The commenter requested the banking agencies provide a definition of telecommunications expenses. To reduce reporting burden, the banking agencies will modify the instructions for Schedule RI–E, item 2, ''Other noninterest expense,'' to indicate that banks should report expenses that reflect a single charge for grouped or ''bundled'' services in the item that most closely describes the predominant type of expense incurred, and that this categorization should be used consistently over time. Regarding the definition of telecommunications expenses, banks should include any expenses associated with telephone, cable, and internet services (including web page maintenance).

F. Reporting Brokered Time Deposits Participated Out by the Broker in the Call Report

The banking agencies revised the instructions for Schedule RC–E, Memorandum items 2.b, ''Total time deposits of less than $100,000,'' and 2.c, ''Total time deposits of $100,000 or more,'' in March 2007. This was done so that brokered time deposits issued in denominations of $100,000 or more that are participated out by the broker in shares of less than $100,000 would be reported in the former rather than the latter Memorandum item. However, the banking agencies did not make a conforming instructional revision to Schedule RC–E, Memorandum items 1.c.(1) and 1.c.(2), on fully insured brokered deposits. This means that these participated brokered time deposits continue to be reported as brokered deposits of greater than $100,000 rather than brokered deposits of less than $100,000. To achieve consistent reporting of these brokered time deposits in Schedule RC–E, the banking agencies proposed to revise Schedule RC–E, Memorandum items 1.c.(1) and 1.c.(2), so that brokered time deposits issued in denominations of $100,000 or more that are participated out by the broker in shares of less than $100,000 are reported in Memorandum item 1.c.(1) as fully insured brokered deposits of less than $100,000.

The banking agencies did not receive any comments on this proposed change to the reporting of brokered time deposits, which will be implemented as proposed.

III. Discontinuance of Mailing of Call Report Forms and Instructions

The banking agencies requested comment on their plan to discontinue the mailing of Call Report forms and instructions for the FFIEC 031 and FFIEC 041. The agencies' current practice is to mail sample forms to banks only in those quarters when significant revisions are made to the report forms. Updates to the Call Report instruction book have been printed and mailed to banks in those quarters when such updates have been issued.

The Call Report forms and their instructions are available on the FFIEC's Web site (*http://www.ffiec.gov/ffiec_report_forms.htm*) and the FDIC's Web site *(http://www.fdic.gov/regulations/resources/call/index.html)* each quarter before any mailings of the paper forms and instructions are completed. A paper copy of the report forms and instructions can be printed from the Web sites. In addition, banks that use Call Report software generally can print paper copies of blank forms from their software.

No comments were received on this issue. The agencies will discontinue mailing paper Call Report forms and instructions in 2008, while retaining their practice of making these materials available to banks electronically.

IV. Other Matters

On February 14, 2007, the OCC, the Board, the FDIC, and the OTS requested comment on a proposed regulatory capital schedule for collecting Basel IA risk-based capital data in the Call Report and the TFR (72 FR 7115). No comments were received on this proposal. On July 20, 2007, the four agencies announced an agreement to issue a proposal to adopt a standardized approach under the Basel II Accord that would replace the Basel IA proposal. As a consequence, the agencies are withdrawing their Basel IA regulatory capital reporting proposal. A regulatory capital reporting proposal for the standardized approach will be issued for comment at a later date.

V. Paperwork Reduction Act Request for Comment

Public comment is requested on all aspects of this joint notice. Comments are invited on:

(a) Whether the proposed revisions to the Call Report and TFR collections of information are necessary for the proper performance of the agencies' functions, including whether the information has practical utility;

(b) The accuracy of the agencies' estimates of the burden of the information collections as they are proposed to be revised, including the validity of the methodology and assumptions used;

(c) Ways to enhance the quality, utility, and clarity of the information to be collected;

(d) Ways to minimize the burden of information collections on respondents, including through the use of automated collection techniques or other forms of information technology; and

(e) Estimates of capital or start up costs and costs of operation, maintenance, and purchase of services to provide information.

Comments submitted in response to this joint notice will be shared among the agencies. All comments will become a matter of public record.

Dated: January 31, 2008.

Stuart E. Feldstein,

Assistant Director, Legislative and Regulatory Activities Division, Office of the Comptroller of the Currency.

Board of Governors of the Federal Reserve System, January 29, 2008.

Jennifer J. Johnson

Secretary of the Board.

Dated at Washington, DC, this 25th day of January, 2008.

Federal Deposit Insurance Corporation.

Valerie J. Best,

Assistant Executive Secretary.

Dated: January 25, 2008.

Deborah Dakin,

Senior Deputy Chief Counsel, Regulations and Legislation Division, Office of Thrift Supervision.

[FR Doc. E8–2024 Filed 2–1–08; 8:45 am]

BILLING CODES 6720–01–P (25%); 6714–01–P (25%); 6210–01–P (25%); 4810–33–P (25%)

FEDERAL RESERVE SYSTEM

Proposed Agency Information Collection Activities; Comment Request

AGENCY: Board of Governors of the Federal Reserve System

SUMMARY: Background.

On June 15, 1984, the Office of Management and Budget (OMB) delegated to the Board of Governors of the Federal Reserve System (Board) its approval authority under the Paperwork Reduction Act (PRA), as per 5 CFR 1320.16, to approve of and assign OMB control numbers to collection of information requests and requirements conducted or sponsored by the Board under conditions set forth in 5 CFR 1320 Appendix A.1. Board–approved collections of information are incorporated into the official OMB inventory of currently approved collections of information. Copies of the Paperwork Reduction Act Submission, supporting statements and approved collection of information instruments are placed into OMB's public docket files. The Federal Reserve may not conduct or sponsor, and the respondent is not required to respond to, an information collection that has been extended, revised, or implemented on or after October 1, 1995, unless it displays a currently valid OMB control number.

Request for comment on information collection proposals

The following information collections, which are being handled under this delegated authority, have received initial Board approval and are hereby published for comment. At the end of the comment period, the proposed information collections, along with an analysis of comments and recommendations received, will be submitted to the Board for final approval under OMB delegated authority. Comments are invited on the following:

a. Whether the proposed collection of information is necessary for the proper performance of the Federal Reserve's functions; including whether the information has practical utility;

b. The accuracy of the Federal Reserve's estimate of the burden of the proposed information collection, including the validity of the methodology and assumptions used;

c. Ways to enhance the quality, utility, and clarity of the information to be collected; and

d. Ways to minimize the burden of information collection on respondents, including through the use of automated collection techniques or other forms of information technology.

DATES: Comments must be submitted on or before April 4, 2008.

ADDRESSES: You may submit comments, identified by FR Y–3, FR Y–3N, and FR Y–4; FR K–1; or FR 1379, by any of the following methods:

- Agency Web Site: http://www.federalreserve.gov. Follow the instructions for submitting comments at http://www.federalreserve.gov/generalinfo/foia/ProposedRegs.cfm.
- Federal eRulemaking Portal: http://www.regulations.gov. Follow the instructions for submitting comments.
- E–mail: regs.comments@federalreserve.gov. Include docket number in the subject line of the message.
- FAX: 202/452–3819 or 202/452–3102.
- Mail: Jennifer J. Johnson, Secretary, Board of Governors of the Federal

Reserve System, 20th Street and Constitution Avenue, N.W., Washington, DC 20551.

All public comments are available from the Board's web site at www.federalreserve.gov/generalinfo/foia/ProposedRegs.cfm as submitted, unless modified for technical reasons. Accordingly, your comments will not be edited to remove any identifying or contact information. Public comments may also be viewed electronically or in paper form in Room MP–500 of the Board's Martin Building (20th and C Streets, N.W.) between 9:00 a.m. and 5:00 p.m. on weekdays.

Additionally, commenters should send a copy of their comments to the OMB Desk Officer by mail to the Office of Information and Regulatory Affairs, U.S. Office of Management and Budget, New Executive Office Building, Room 10235, 725 17th Street, NW., Washington, DC 20503 or by fax to 202–395–6974.

FOR FURTHER INFORMATION CONTACT: A copy of the PRA OMB submission including, the proposed reporting form and instructions, supporting statement, and other documentation will be placed into OMB's public docket files, once approved. These documents will also be made available on the Federal Reserve Board's public website at: http://www.federalreserve.gov/boarddocs/reportforms/review.cfm or may be requested from the agency clearance officer, whose name appears below.

Michelle Shore, Federal Reserve Board Clearance Officer (202–452–3829), Division of Research and Statistics, Board of Governors of the Federal Reserve System, Washington, DC 20551. Telecommunications Device for the Deaf (TDD) users may contact (202–263–4869), Board of Governors of the Federal Reserve System, Washington, DC 20551.

Proposal to approve under OMB delegated authority the extension for three years, with revision, of the following reports:

1. Report titles: Application for Prior Approval to Become a Bank Holding Company or for a Bank Holding Company to Acquire an Additional Bank or Bank Holding Company; Notification for Prior Approval to Become a Bank Holding Company or for a Bank Holding Company to Acquire an Additional Bank or Bank Holding Company; and Notification for Prior Approval to Engage Directly or Indirectly in Certain Nonbanking Activities

Agency form numbers: FR Y–3, FR Y–3N, and FR Y–4

OMB control number: 7100–0121

Frequency: Event generated

Reporters: Corporations seeking to become bank holding companies (BHCs), or BHCs and state chartered banks that are members of the Federal Reserve System.

Annual reporting hours: 22,920

Estimated average hours per response: FR Y–3 Section 3(a)(1): 49; FR Y–3 Section 3(a)(3) and 3(a)(5): 59.5; FR Y–3N Section 3(a)(1), 3(a)(3), and 3(a)(5): 5; FR Y–4 Complete notification: 12; FR Y–4 Expedited notification: 5; and FR Y–4 Post–consummation: 30 minutes

Number of respondents: 674

General description of report: This information collection is mandatory (12 U.S.C. 1842(a), 1844(b),and 1843(j)(1)(b)). The forms are designed so that all information contained in a filing is available to the public unless the applicant, notificant, or individual(s) can substantiate that an exemption under the Freedom of Information Act (FOIA) is satisfied.

Abstract: The Federal Reserve requires the submission of these filings for regulatory and supervisory purposes and to allow the Federal Reserve to fulfill its statutory obligations under the Bank Holding Company Act of 1956. These filings collect information on proposals by bank holding companies involving formations, acquisitions, mergers, and nonbanking activities. The Federal Reserve must obtain this information to evaluate each individual transaction with respect to financial and managerial factors, permissibility, competitive effects, net public benefits, and the impact on the convenience and needs of affected communities.

Current Actions: The proposed revisions reflect changes to the Federal Reserve's Small Bank Holding Company Policy Statement and the Federal Reserve's risk–based and leverage capital guidelines that were announced in February 2006. The proposed revisions also reflect recent changes in the type of information that the Federal Reserve requires from filers for purposes of determining whether information submitted in a filing may be provided to the public under the FOIA. Each proposed revision is intended to make initial filings more reflective of the specifically proposed transaction and thereby reduce the need for subsequent information requests, which delay the Federal Reserve's consideration of a filing and create additional burden for filers. In addition, the instructions have been reformatted to clarify the possible filings, clarify the legal and financial requirements for different types of filings, and provide additional practical guidance to assist a filer in understanding the information and processing requirements for particular types of proposals.

2. Report title: International Applications and Prior Notifications under Subparts A and C of Regulation K

Agency form number: FR K–1

OMB control number: 7100–0107

Frequency: Event generated

Reporters: State member banks, Edge and agreement corporations, bank holding companies, and certain foreign banking organizations.

Annual reporting hours: 889

Estimated average hours per response: Attachments A and B, 11.5 hours; Attachments C through G, 10 hours; Attachments H and I, 15.5 hours; Attachment J, 10 hours; Attachment K, 20 hours

Number of respondents: 29

General description of report: This information collection is mandatory (12 U.S.C. 601–604(a) and 611–631)) and (12 U.S.C. 1843(c)(13), 1843(c)(14) and 1844(c)). The applying organization has the opportunity to request confidentiality for information that it believes will qualify for an FOIA exemption.

Abstract: Subpart A of Regulation K governs the foreign investments and activities of member banks, Edge and agreement corporations, bank holding companies, and certain investments by foreign organizations. Subpart C of Regulation K governs investments in export trading companies. The FR K–1 information collection contains eleven attachments for the application and notification requirements embodied in Subparts A and C of Regulation K. The Federal Reserve requires these applications for regulatory and supervisory purposes and to allow the Federal Reserve to fulfill its statutory obligations under the Federal Reserve Act and the Bank Holding Company Act of 1956.

Current Actions: The Federal Reserve proposes to replace the existing confidentiality paragraph in the General Information and Instructions. In addition, respondents would be required to make a certification regarding information contained in the application.

3. Report titles: Consumer Satisfaction Questionnaire; Federal Reserve Consumer Help Center Survey; and Federal Reserve Consumer Help Online Complaint Form

Agency form numbers: FR 1379a, FR 1379b, and FR 1379c

OMB control number: 7100–0135

Frequency: Event generated

Reporters: Consumers

Annual reporting hours: 2,037

Estimated average hours per response: FR 1379a: 5 minutes; FR 1379b: 5 minutes; FR 1379c: 10 minutes.

Number of respondents: FR 1379a: 2,640; FR 1379b: 1,800; FR 1379c: 10,000.

General description of report: This information collection is voluntary and authorized by law (15 U.S.C. 57(a)(f)(1)). While the individual respondent's information is confidential, once such information has been aggregated, the aggregated information is not considered confidential. The information may be aggregated with responses from other respondents and released in statistical format while maintaining the privacy of the individual respondents. If a respondent provides information not specifically solicited on the form, that information may be exempt from disclosure under FOIA (5 U.S.C. § 552 (b)(4), (b)(6), or (b)(7)) upon specific request from the respondent.

Abstract: The FR 1379 questionnaires are sent to consumers who have filed complaints with the Federal Reserve against state member banks. The information gathered on the questionnaires is used to determine whether consumers are satisfied with the way the Federal Reserve Bank handled their complaints and to solicit suggestions for improving the complaint investigation process.

Current Actions: The Federal Reserve proposes to revise the FR 1379 information collection by: (1) renumbering the current FR 1379 to FR 1379a and reducing the number of questions from twenty–five to six, (2) implementing a new voluntary questionnaire, the Federal Reserve Consumer Help Center Survey (FR 1379b) to survey consumers about the Federal Reserve Consumer Help (FRCH) center, the Federal Reserve System's new central intake center for consumer complaints and inquiries, and (3) implementing a new voluntary consumer complaint form, the Federal Reserve Consumer Help Online Complaint Form (FR 1379c) to the FRCH web site[1] that would allow consumers to submit their complaint or inquiry to the FRCH center electronically. The proposed changes would be effective second quarter 2008.

Board of Governors of the Federal Reserve System, January 30, 2008.

Jennifer J. Johnson,

Secretary of the Board.

[FR Doc. E8–1930 Filed 2–1–08; 8:45 am]

BILLING CODE 6210–01–S

[1] See Press Release dated November 19, 2007: www.federalreserve.gov/newsevents/press/other/20071119a.htm.

FEDERAL RESERVE SYSTEM

Change in Bank Control Notices; Acquisition of Shares of Bank or Bank Holding Companies

The notificants listed below have applied under the Change in Bank Control Act (12 U.S.C. 1817(j)) and § 225.41 of the Board's Regulation Y (12 CFR 225.41) to acquire a bank or bank holding company. The factors that are considered in acting on the notices are set forth in paragraph 7 of the Act (12 U.S.C. 1817(j)(7)).

The notices are available for immediate inspection at the Federal Reserve Bank indicated. The notices also will be available for inspection at the office of the Board of Governors. Interested persons may express their views in writing to the Reserve Bank indicated for that notice or to the offices of the Board of Governors. Comments must be received not later than February 15, 2008.

A. Federal Reserve Bank of Dallas (W. Arthur Tribble, Vice President) 2200 North Pearl Street, Dallas, Texas 75201–2272:

1. William Glover Loftin, to acquire voting shares of Capital Bancorp, Inc., and thereby indirectly acquire voting shares of Commercial Capital Bank, all of Delhi, Louisiana.

Board of Governors of the Federal Reserve System, January 30, 2008.

Robert deV. Frierson,

Deputy Secretary of the Board.

[FR Doc. E8–1946 Filed 2–1–08; 8:45 am]

BILLING CODE 6210–01–S

DEPARTMENT OF HEALTH AND HUMAN SERVICES

Centers for Disease Control and Prevention

Advisory Board on Radiation and Worker Health (ABRWH), National Institute for Occupational Safety and Health (NIOSH)

In accordance with section 10(a)(2) of the Federal Advisory Committee Act (Pub. L. 92–463), the Centers for Disease Control and Prevention (CDC), announces the following meeting of the aforementioned committee:

Time and Date: 11 a.m.–4 p.m., February 20, 2008.

Place: Audio Conference Call. The USA toll free dial in number is 1 (866) 659–0537. Passcode is 9933701.

Status: Open to the public, but without a public comment period.

Background: The Advisory Board was established under the Energy Employees Occupational Illness Compensation Program Act of 2000 to advise the President on a variety of policy and technical functions required to implement and effectively manage the new compensation program. Key functions of the Advisory Board include providing advice on the development of probability of causation guidelines which have been promulgated by the Department of Health and Human Services (HHS) as a final rule, advice on methods of dose reconstruction which have also been promulgated by HHS as a final rule, advice on the scientific validity and quality of dose estimation and reconstruction efforts being performed for purposes of the compensation program, and advice on petitions to add classes of workers to the Special Exposure Cohort (SEC).

In December 2000, the President delegated responsibility for funding, staffing, and operating the Advisory Board to HHS, which subsequently delegated this authority to the CDC. NIOSH implements this responsibility for CDC. The charter was issued on August 3, 2001, renewed at appropriate intervals, most recently, August 3, 2007, and will expire on August 3, 2009.

Purpose: This Advisory Board is charged with (a) providing advice to the Secretary, HHS, on the development of guidelines under Executive Order 13179; (b) providing advice to the Secretary, HHS, on the scientific validity and quality of dose reconstruction efforts performed for this program; and (c) upon request by the Secretary, HHS, advising the Secretary on whether there is a class of employees at any Department of Energy facility who were exposed to radiation but for whom it is not feasible to estimate their radiation dose, and on whether there is reasonable likelihood that such radiation doses may have endangered the health of members of this class.

Matters To Be Discussed: The agenda for the conference call includes: Special Exposure Cohort (SEC) Petition Status Updates for Chapman Valve and Dow Chemical; Work Group Updates; Subcommittee on Dose Reconstruction Update; Status of transcripts and minutes; and Board working time and future plans and meetings.

The agenda is subject to change as priorities dictate.

Because there is not a public comment period, written comments may be submitted. Any written comments received will be included in the official record of the meeting and should be submitted to the contact person below well in advance of the meeting.

Contact Person for More Information: Dr. Lewis V. Wade, Executive Secretary, NIOSH, CDC, 4676 Columbia Parkway, Cincinnati, Ohio 45226, Telephone (513) 533–6825, Fax (513) 533–6826.

The Director, Management Analysis and Services Office, has been delegated the authority to sign **Federal Register** notices pertaining to announcements of meetings and other committee management activities, for both CDC and the Agency for Toxic Substances and Disease Registry.

Dated: January 24, 2008.

Elaine L. Baker,

Director, Management Analysis and Services Office, Centers for Disease Control and Prevention.

[FR Doc. E8–2013 Filed 2–1–08; 8:45 am]

BILLING CODE 4163–18–P

DEPARTMENT OF HEALTH AND HUMAN SERVICES

Administration for Children and Families

Submission for OMB Review; Comment Request

Title: Project 1099.
OMB No.: 0970–0183.

Description: A voluntary program which provides State Child Support Enforcement agencies, upon their request, access to the earned and unearned income information reported to IRS by employers and financial institutions. The IRS 1099 information is used to locate noncustodial parents and to verify income and employment.

Respondents: State IV–D programs.

ANNUAL BURDEN ESTIMATES

Instrument	Number of respondents	Number of responses per respondent	Average burden hours per response	Total burden hours
1099 Record specifications	54	12	1.96	1,270
IRS Safeguarding Certification Letter	54	1	.48	26

Estimated Total Annual Burden Hours: 1,296.

Additional Information: Copies of the proposed collection may be obtained by writing to the Administration for Children and Families, Office of Administration, Office of Information Services, 370 L'enfant Promenade, SW., Washington, DC 20447, Attn: ACF Reports Clearance Officer. All requests should be identified by the title of the information collection. E-mail address: *infocollection@acf.hhs.gov.*

OMB Comment: OMB is required to make a decision concerning the collection of information between 30 and 60 days after publication of this document in the **Federal Register**. Therefore, a comment is best assured of having its full effect if OMB receives it within 30 days of publication. Written comments and recommendations for the proposed information collection should be sent directly to the following:

Office of Management and Budget, Paperwork Reduction Project, Fax: 202–395–6974, Attn: Desk Officer for the Administration for Children and Families.

Dated: January 25, 2008.

Janean Chambers,

Reports Clearance Officer.

[FR Doc. 08–446 Filed 2–1–08; 8:45 am]

BILLING CODE 4184–01–M

DEPARTMENT OF HEALTH AND HUMAN SERVICES

Food and Drug Administration

Pulmonary-Allergy Drug Advisory Committee; Cancellation

AGENCY: Food and Drug Administration, HHS.

ACTION: Notice.

SUMMARY: The meeting of the Pulmonary-Allergy Drugs Advisory Committee scheduled for February 20, 2008, is cancelled. This meeting was announced in the **Federal Register** of December 21, 2007 (72 FR 72737).

FOR FURTHER INFORMATION CONTACT: Teresa A. Watkins, Center for Drug Evaluation and Research (HFD–21), Food and Drug Administration, 5630 Fishers Lane (for express delivery, rm. 1093), Rockville, MD 20857, 301–827–7001, FAX: 301–827–6776, e-mail: *Teresa.Watkins@fda.hhs.gov*, or FDA Advisory Committee Information Line, 1–800–741–8138 (301–443–0572 in the Washington, DC area), code 3014512545. Please call the Information Line for up-to-date information on this meeting.

Dated: January 29, 2008.

Randall W. Lutter,

Deputy Commissioner for Policy.

[FR Doc. E8–1959 Filed 2–1–08; 8:45 am]

BILLING CODE 4160–01–S

DEPARTMENT OF HEALTH AND HUMAN SERVICES

National Institutes of Health

Clinical Center; Notice of Closed Meeting

Pursuant to section 10(d) of the Federal Advisory Committee Act, as amended (5 U.S.C. appendix 2), notice is hereby given of a meeting of the Board of Scientific Counselors of the NIH Clinical Center.

The meetings will be closed to the public in accordance with the provisions set forth in section 552b(c)(6), title 5 U.S.C., as amended, for the review, discussion, and evaluation of individual intramural programs and projects conducted by the Clinical Center, including consideration of personnel qualifications and performance and the competence of individual investigators, the disclosure of which would constitute a clearly unwarranted invasion of personal privacy.

Name of Committee: Board of Scientific Counselors of the NIH Clinical Center.

Date: February 25, 2008.

Time: 8 a.m. to 5 p.m.

Agenda: To review and evaluate Imaging Sciences Review.

Place: National Institutes of Health, Building 10, 10 Center Drive, CRC—Room 4–2551, Bethesda, MD 20892.

Contact Person: David K. Henderson, MD, Deputy Director for Clinical Care, Office of the Director, Clinical Center, National Institutes of Health, Building 10, Room 6–1480, Bethesda, MD 20892, (301) 496–3515.

Dated: January 24, 2008.

Jennifer Spaeth,

Director, Office of Federal Advisory Committee Policy.

[FR Doc. 08–465 Filed 2–1–08; 8:45 am]

BILLING CODE 4140–01–M

DEPARTMENT OF HEALTH AND HUMAN SERVICES

National Institutes of Health

National Institute of General Medical Sciences; Notice of Closed Meetings

Pursuant to section 120(d) of the Federal Advisory Committee Act, as amended (5 U.S.C. Appendix 2), notice is hereby given of the following meetings.

The meetings will be closed to the public in accordance with the provisions set forth in sections 552b(c)(4) and 552b(c)(6), Title 5 U.S.C., as amended. The grant applications and the discussions could disclose confidential trade secrets or commercial property such as patentable material,

and personal information concerning individuals associated with the grant applications, the disclosure of which would constitute a clearly unwarranted invasion of personal privacy.

Name of Committee: National Institute of General Medical Sciences Special Emphasis Panel Minority Biomedical Research Support in Neurobiology and Physiology.

Date: February 25–26, 2008.

Time: 8:30 a.m. to 5 p.m.

Agenda: To review and evaluate grant applications.

Place: Hyatt Regency Bethesda, One Bethesda Metro Center, 7400 Wisconsin Avenue, Bethesda, MD 20814.

Contact Person: Margaret J. Weidman, PhD, Office of Scientific Review, National Institute of General Medical Sciences, National Institutes of Health, 45 Center Drive, Room 3AN18B, Bethesda, MD 20892, 301–594–3663, *weidmanma@nigms.nih.gov.*

Name of Committee: National Institute of General Medical Sciences Special Emphasis Panel, Minority Biomedical Research Support in Genetics.

Date: February 27–28, 2008.

Time: 8 a.m. to 5 p.m.

Agenda: To review and evaluate grant applications.

Place: Hyatt Regency Bethesda, One Bethesda Metro Center, 7400 Wisconsin Avenue, Bethesda, MD 20814.

Contact Person: John J. Laffan, PhD, Office of Scientific Review, National Institute of General Medical Sciences, National Institutes of Health, Natcher Building, Room 3AN18J, Bethesda, MD 20892, 301–594–2773.

(Catalogue of Federal Domestic Assistance Program Nos. 93.375, Minority Biomedical Research Support; 93.821, Cell Biology and Biophysics Research; 93.859, Pharmacology, Physiology, and Biological Chemistry Research; 93.862, Genetics and Developmental Biology Research; 93.88, Minority Access to Research Careers; 93.96, Special Minority Initiatives, National Institutes of Health, HHS)

Dated: January 28, 2008.

Jennifer Spaeth,

Director of Federal Advisory Committee Policy.

[FR Doc. 08–467 Filed 2–1–08; 8:45 am]

BILLING CODE 4140–01–M

DEPARTMENT OF HEALTH AND HUMAN SERVICES

National Institutes of Health

National Institute on Aging; Notice of Closed Meetings

Pursuant to section 10(d) of the Federal Advisory Committee Act, as amended (5 U.S.C. Appendix 2), notice is hereby given of the following meetings.

The meetings will be closed to the public in accordance with the provisions set forth in sections 552b(c)(4) and 552b(c)(6), Title 5 U.S.C., as amended. The grant applications and the discussions could disclose confidential trade secrets or commercial property such as patentable material, and personal information concerning individuals associated with the grant applications, the disclosure of which would constitute a clearly unwarranted invasion of personal privacy.

Name of Committee: National Institute on Aging Special Emphasis Panel, Aging Hormone Trial.

Date: February 27, 2008.

Time: 9 a.m. to 11:30 a.m.

Agenda: To review and evaluate grant applications.

Place: National Institute on Aging, Gateway Building, 7201 Wisconsin Avenue, Suite 2C–212, Bethesda, MD 20814 (Telephone Conference Call).

Contact Person: Ramesh Vemuri, PhD, Scientific Review Office, National Institute on Aging, National Institutes of Health, 7201 Wisconsin Avenue, Suite 2C–212, Bethesda, MD 20892, 301–402–7700, *rv23r@nih.gov.*

Name of Committee: National Institute on Aging Special Emphasis Panel, Beeson Meeting.

Date: March 3–4, 2008.

Time: 4 p.m. to 5 p.m.

Agenda: To review and evaluate grant applications.

Place: Washingtonian Center Courtyard, 204 Boardwalk Place, Gaithersburg, MD 20878.

Contact Person: William Cruce, PhD, Health Scientist Administrator, Scientific Review Office, National Institute on Aging, National Institutes of Health, Room 2C–212, 7201 Wisconsin Avenue, Bethesda, MD 20814, 301–402–7704, *crucew@nia.nih.gov.*

Name of Committee: National Institute on Aging Special Emphasis Panel, Juvenile Protective Factor RFA Meeting.

Date: March 10–11, 2008.

Time: 7 a.m. to 5 p.m.

Agenda: To review and evaluate grant applications.

Place: Bethesda Marriott Suites, 6711 Democracy Boulevard, Bethesda, MD 20817.

Contact Person: Bita Nakhai, PhD, Scientific Review Administrator, Scientific Review Office, National Institute on Aging, Gateway Bldg., 2C–212, 7201 Wisconsin Avenue, Bethesda, MD 20814, 301–402–7701, *nakhaib@nia.nih.gov.*

(Catalogue of Federal Domestic Assistance Program Nos. 93.866, Aging Research, National Institutes of Health, HHS)

Dated: January 28, 2008.

Jennifer Spaeth,

Director, Office of Federal Advisory Committee Policy.

[FR Doc. 08–468 Filed 2–1–08; 8:45 am]

BILLING CODE 4140–01–M

DEPARTMENT OF HEALTH AND HUMAN SERVICES

National Institutes of Health

Center for Scientific Review; Notice of Closed Meetings

Pursuant to section 10(d) of the Federal Advisory Committee Act, as amended (5 U.S.C. Appendix 2), notice is hereby given of the following meetings.

The meetings will be closed to the public in accordance with the provisions set forth in sections 552b(c)(4) and 552b(c)(6), Title 5 U.S.C., as amended. The grant applications and the discussions could disclose confidential trade secrets or commercial property such as patentable material, and personal information concerning individuals associated with the grant applications, the disclosure of which would constitute a clearly unwarranted invasion of personal privacy.

Name of Committee: Center for Scientific Review Special Emphasis Panel, Dental and Enamel: Developmental Biology Special Emphasis Panel.

Date: February 13, 2008.

Time: 10 a.m. to 2 p.m.

Agenda: To review and evaluate grant applications.

Place: National Institutes of Health, 6701 Rockledge Drive, Bethesda, MD 20892 (Telephone Conference Call).

Contact Person: Tamizchelvi Thyagarajan, PhD, Scientific Review Administrator, Center for Scientific Review, National Institutes of Health, 6701 Rockledge Drive, Room 4016K, MSC 7814, Bethesda, MD 20892, 301–451–1327, *tthyagar@csr.nih.gov.*

This notice is being published less than 15 days prior to the meeting due to the timing limitations imposed by the review and funding cycle.

Name of Committee: Center for Scientific Review Special Emphasis Panel, Arthritis Connective Tissue and Skin Sciences.

Date: February 19, 2008.

Time: 10 a.m. to 2 p.m.

Agenda: To review and evaluate grant applications.

Place: National Institutes of Health, 6701 Rockledge Drive, Bethesda, MD 20892 (Telephone Conference Call).

Contact Person: Jane D. Sipe, PhD, Scientific Review Administrator, Center for Scientific Review, National Institutes of Health, 6701 Rockledge Drive, Room 4016, MSC 7814, Bethesda, MD 20892, 301–435–1743, *sipej@csr.nih.gov.*

This notice is being published less than 15 days prior to the meeting due to the timing limitations imposed by the review and funding cycle.

Name of Committee: Center for Scientific Review Special Emphasis Panel, Neurodegeneration and Disease Mechanisms.

Date: February 20, 2008.

Time: 11 a.m. to 1 p.m.

Agenda: To review and evaluate grant applications.

Place: National Institutes of Health, 6701 Rockledge Drive, Bethesda, MD 20892 (Telephone Conference Call).

Contact Person: Deborah L. Lewis, PhD, Scientific Review Administrator, Center for Scientific Review, National Institutes of Health, 6701 Rockledge Drive, Room 4118, MSC 7850, Bethesda, MD 20892, 301–435–1224, *lewisdeb@csr.nih.gov.*

Name of Committee: Center for Scientific Review Special Emphasis Panel, Small Business: Radiation Therapy and Biology.

Date: February 21–22, 2008.

Time: 1 p.m. to 5 p.m.

Agenda: To review and evaluate grant applications.

Place: National Institutes of Health, 6701 Rockledge Drive, Bethesda, MD 20892 (Virtual Meeting).

Contact Person: Bo Hong, PhD, Scientific Review Administrator, Center for Scientific Review, National Institutes of Health, 6701 Rockledge Drive, Room 6194, MSC 7804, Bethesda, MD 20892, 301–435–5879, *hongb@csr.nih.gov.*

Name of Committee: Center for Scientific Review Special Emphasis Panel, Cancel Biomarkers.

Date: February 26, 2008.

Time: 1 p.m. to 3 p.m.

Agenda: To review and evaluate grant applications.

Place: National Institutes of Health, 6701 Rockledge Drive, Bethesda, MD 20892 (Telephone Conference Call).

Contact Person: Zhiqiang Zou, MD, PhD, Scientific Review Administrator, Center for Scientific Review, National Institutes of Health, 6701 Rockledge Drive, Room 6190, MSC 7804, Bethesda, MD 20892, 301–451–0132, *zouzhiq@csr.nih.gov.*

Name of Committee: Center for Scientific Review Special Emphasis Panel, Substance Abuse Prevention and Interventions.

Date: March 3, 2008.

Time: 10 a.m. to 11 a.m.

Agenda: To review and evaluate grant applications.

Place: National Institutes of Health, 6701 Rockledge Drive, Bethesda, MD 20892 (Telephone Conference Call).

Contact Person: Karen Lechter, PhD, Scientific Review Administrator, Center for Scientific Review, National Institutes of Health, 6701 Rockledge Drive, Room 3128, MSC 7759, Bethesda, MD 20892, 301–496–0726, *lechterk@csr.nih.gov.*

Name of Committee: Center for Scientific Review Special Emphasis Panel, Psychological and Medical Studies and Interventions.

Date: March 4, 2008.

Time: 10 a.m. to 11 a.m.

Agenda: To review and evaluate grant applications.

Place: National Institutes of Health, 6701 Rockledge Drive, Bethesda, MD 20892 (Telephone Conference Call).

Contact Person: Karen Lechter, PhD, Scientific Review Administrator, Center for Scientific Review, National Institutes of Health, 6701 Rockledge Drive, Room 3128, MSC 7759, Bethesda, MD 20892, 301–496–0726, *lechterk@csr.nih.gov.*

Name of Committee: Center for Scientific Review Special Emphasis Panel, ZRG1 DIG G (02) M Special Emphasis Panel.

Date: March 4, 2008.

Time: 11 a.m. to 1:30 p.m.

Agenda: To review and evaluate grant applications.

Place: National Institutes of Health, 6701 Rockledge Drive, Bethesda, MD 20892 (Telephone Conference Call).

Contact Person: Rass M. Shayiq, PhD, Scientific Review Administrator, Center for Scientific Review, National Institute of Health, 6701 Rockledge Drive, Room 2182, MSC 7818, Bethesda, MD 20892, (301) 435–2359, *shayiqr@csr.nih.gov.*

Name of Committee: Center for Scientific Review Special Emphasis Panel, Cancer Immune Therapy.

Date: March 4, 2008.

Time: 3:30 p.m. to 5:30 p.m.

Agenda: To review and evaluate grant applications.

Place: National Institutes of Health, 6701 Rockledge Drive, Bethesda, MD 20892 (Telephone Conference Call).

Contact Person: Zhiqiang Zou, MD, PhD, Scientific Review Administrator, Center for Scientific Review, National Institutes of Health, 6701 Rockledge Drive, Room 6190, MSC 7804, Bethesda, MD 20892, (301) 451–0132, *zouzhiq@csr.nih.gov.*

Name of Committee: AIDS and Related Research Integrated Review Group, AIDS Clinical Studies and Epidemiology Study Section.

Date: March 5–6, 2008.

Time: 8 a.m. to 5 p.m.

Agenda: To review and evaluate grant applications.

Place: Sheraton Gateway Hotel Los Angeles, 6101 West Century Boulevard, Salon 205, Los Angeles, CA 90045.

Contact Person: Hilary D. Sigmon, PhD, Scientific Review Administrator, Center for Scientific Review, National Institutes of Health, 6701 Rockledge Drive, Room 5216, MSC 7852, Bethesda, MD 20892, (301) 594–6377, *sigmonh@csr.nih.gov.*

Name of Committee: Center for Scientific Review Special Emphasis Panel, Small Business: Respiratory Sciences.

Date: March 5–6, 2008.

Time: 9 a.m. to 5 p.m.

Agenda: To review and evaluate grant applications.

Place: National Institutes of Health, 6701 Rockledge Drive, Bethesda, MD 20892 (Virtual Meeting).

Contact Person: Bonnie L. Burgess-Beusse, PhD, Scientific Review Administrator, Center for Scientific Review, National Institutes of Health, 6701 Rockledge Drive, Room 2191C, MSC 7818, Bethesda, MD 20892, 301–435–1783, *beusseb@mail.nih.gov.*

Name of Committee: Center for Scientific Review Special Emphasis Panel, Chemical and Bioanalytical Sciences.

Date: March 6, 2008.

Time: 8 a.m. to 5 p.m.

Agenda: To review and evaluate grant applications.

Place: Churchill Hotel, 1914 Connecticut Avenue, NW., Washington, DC 20009.

Contact Person: Denise Beusen, PhD, Scientific Review Officer, Center for Scientific Review, National Institutes of Health, 6701 Rockledge Drive, Room 4142, MSC 7806, Bethesda, MD 20892, (301) 435–1267, *beusend@csr.nih.gov.*

Name of Committee: Center for Scientific Review Special Emphasis Panel, Chemical and Bioanalytical Sciences.

Date: March 6, 2008.

Time: 8 a.m. to 4 p.m.

Agenda: To review and evaluate grant applications.

Place: Churchill Hotel, 1914 Connecticut Avenue, NW., Washington, DC 20009.

Contact Person: David R. Jollie, PhD, Scientific Review Administrator, Center for Scientific Review, National Institutes of Health, 6701 Rockledge Drive, Room 4156, MSC 7806, Bethesda, MD 20892, (301) 435–1722, *jollieda@csr.nih.gov.*

Name of Committee: Center for Scientific Review Special Emphasis Panel, Fellowship: Surgical Sciences Biomedical Imaging and Bioengineering.

Date: March 7, 2008.

Time: 11 a.m. to 4 p.m.

Agenda: To review and evaluate grant applications.

Place: National Institutes of Health, 6701 Rockledge Drive, Bethesda, MD 20892 (Telephone Conference Call).

Contact Person: John Firrell, PhD, Scientific Review Administrator, Center for Scientific Review, National Institutes of Health, 6701 Rockledge Drive, Room 5213, MSC 7854, Bethesda, MD 20892, (301) 435–2598, *firrellj@csr.nih.gov.*

Name of Committee: Center for Scientific Review Special Emphasis Panel, PAR–07–271 Nanoscience and Nanotechnology in Biology and Medicine.

Date: March 10–11, 2008.

Time: 8 a.m. to 6 p.m.

Agenda: To review and evaluate grant applications.

Place: Beacon Hotel and Corporate Quarters, 1615 Rhode Island Avenue, NW., Washington, DC 20036.

Contact Person: Ross D. Shonat, PhD, Scientific Review Officer, Center for Scientific Review, National Institutes of Health, 6701 Rockledge Drive, Room 5156, MSC 7849, Bethesda, MD 20892, (301) 435–2786, *shonatr@csr.nih.gov.*

Name of Committee: Center for Scientific Review Special Emphasis Panel, Diet and Physical Activity Assessment Methods.

Date: March 11, 2008.

Time: 8 a.m. to 5 p.m.

Agenda: To review and evaluate grant applications.

Place: George Washington University Inn, 824 New Hampshire Avenue, NW., Washington, DC 20037.

Contact Person: Ann Hardy, DRPH, Scientific Review Administrator, Center for Scientific Review, National Institutes of Health, 6701 Rockledge Drive, Room 3158, MSC 7770, Bethesda, MD 20892, (301) 435–0695, *hardyan@csr.nih.gov.*

Name of Committee: Center for Scientific Review Special Emphasis Panel, Small Business: Computational Biology and Software Development.

Date: March 11, 2008.

Time: 8 a.m. to 4:30 p.m.

Agenda: To review and evaluate grant applications.

Place: One Washington Circle Hotel, One Washington Circle, Washington, DC 20037.

Contact Person: Malgorzata Klosek, PhD, Scientific Review Officer, Center for Scientific Review, National Institutes of Health, 6701 Rockledge Drive, Room 4188, MSC 7849, Bethesda, MD 20892, (301)–435–2211, *klosekm@csr.nih.gov.*

Name of Committee: AIDS and Related Research Integrated Review Group, NeuroAIDS and other End-Organ Diseases Study Section.

Date: March 11, 2008.

Time: 8 a.m. to 5 p.m.

Agenda: To review and evaluate grant applications.

Place: The Francis Marion Hotel, 387 King Street, Charlestown, SC 29403.

Contact Person: Ranga V. Srinivas, PhD, Scientific Review Officer, Center for Scientific Review, National Institutes of Health, 6701 Rockledge Drive, Room 5216, MSC 7852, Bethesda, MD 20892, (301)–435–1167, *srinivar@csr.nih.gov.*

Name of Committee: Center for Scientific Review Special Emphasis Panel, Developmental Psychology.

Date: March 11, 2008.

Time: 10 a.m. to 11 p.m.

Agenda: To review and evaluate grant applications.

Place: National Institutes of Health, 6701 Rockledge Drive, Bethesda, MD 20892 (Telephone Conference Call).

Contact Person: Karen Lechter, PhD, Scientific Review Administrator, Center for Scientific Review, National Institutes of Health, 6701 Rockledge Drive, Room 3128, MSC 7759, Bethesda, MD 20892, (301)–496–0726, *lechterk@csr.nih.gov.*

Name of Committee: Center for Scientific Review Special Emphasis Panel, Mixed Instrumentation.

Date: March 11–12, 2008.

Time: 1 p.m. to 1:50 p.m.

Agenda: To review and evaluate grant applications.

Place: National Institutes of Health, 6701 Rockledge Drive, Bethesda, MD 20892 (Virtual Meeting).

Contact Person: Nitsa Rosenzweig, PhD, Scientific Review Officer, Center for Scientific Review, National Institutes of Health, 6701 Rockledge Drive, Room 1102, MSC 7760, Bethesda, MD 20892, (301)–435–1747, *rosenzweign@csr.nih.gov.*

Name of Committee: Center for Scientific Review Special Emphasis Panel, Member Conflict; Imaging Cognition.

Date: March 11, 2008.

Time: 2 p.m. to 4 p.m.

Agenda: To review and evaluate grant applications.

Place: National Institutes of Health, 6701 Rockledge Drive, Bethesda, MD 20892 (Telephone Conference Call).

Contact Person: Bernard F. Driscoll, PhD, Scientific Review Administrator, Center for Scientific Review, National Institutes of Health, 6701 Rockledge Drive, Room 5184, MSC 7844, Bethesda, MD 20892, (301)–435–1242, *driscolb@csr.nih.gov.*

(Catalogue of Federal Domestic Assistance Program Nos. 93.306, Comparative Medicine; 93.333, Clinical Research, 93,306, 93.333, 93.337, 93.393–93.396, 93.837–93.844, 93.846–93.878, 93.892, 93.893, National Institutes of Health, HHS)

Dated: January 28, 2008.

Jennifer Spaeth,

Director, Office of Federal Advisory Committee Policy.

[FR Doc. 08–466 Filed 2–1–08; 8:45 am]

BILLING CODE 4140–01–M

DEPARTMENT OF HOMELAND SECURITY

National Communications System

[Docket No. NCS–2007–0006]

President's National Security Telecommunications Advisory Committee

AGENCY: National Communications System, DHS.

ACTION: Notice of Partially Closed Advisory Committee Meeting.

SUMMARY: The President's National Security Telecommunications Advisory Committee (NSTAC) will be meeting by teleconference: the meeting will be partially closed.

DATES: February 28, 2008, from 2 p.m. until 3 p.m.

ADDRESSES: The meeting will take place by teleconference. For access to the conference bridge and meeting materials, contact Ms. Sue Daage at (703) 235–5526 or by e-mail at *sue.daage@dhs.gov* by 5 p.m. February 21, 2008. If you desire to submit comments regarding the February 28, 2008, meeting, they must be submitted by March 7, 2008. Comments must be identified by NCS–2007–0006 and may be submitted by one of the following methods:

- *Federal eRulemaking Portal: http://www.regulations.gov.* Follow the instructions for submitting comments.
- *E-mail: NSTAC1@dhs.gov.* Include docket number in the subject line of the message.
- *Mail:* Office of the Manager, National Communications System (N5), Department of Homeland Security, Washington, DC, 20529.
- *Fax:* 1–866–466–5370.

Instructions: All submissions received must include the words ''Department of Homeland Security'' and NCS–2007–0006, the docket number for this action. Comments received will be posted without alteration at *http://www.regulations.gov*, including any personal information provided.

Docket: For access to the docket to read background documents or comments received by the NSTAC, go to *http://www.regulations.gov.*

FOR FURTHER INFORMATION CONTACT: Ms. Kiesha Gebreyes, Acting Chief, Customer Service Division at (703) 235–5525, e-mail: *Kiesha.Gebreyes@dhs.gov* or write the Deputy Manager, National Communications System, Department of Homeland Security, CS&C/NCS/N5.

SUPPLEMENTARY INFORMATION: NSTAC advises the President on issues and problems related to implementing national security and emergency preparedness telecommunications policy. Notice of this meeting is given under the Federal Advisory Committee Act (FACA), Public Law 92–463 (1972), as amended appearing in 5 U.S.C. App. 1 *et seq.* (1997).

At the upcoming meeting, between 2 p.m. and 2:30 p.m., the conference call will include government stakeholder feedback on NSTAC initiatives, and a discussion and vote on its Global Positioning Systems Report. This portion of the meeting will be open to the public.

Between 2:30 p.m. and 3 p.m., NSTAC will discuss and vote on the results of its investigation of the global network infrastructure environment. NSTAC will also discuss progress made by its Network Security Scoping Group. This portion of the meeting will be closed to the public.

Persons with disabilities who require special assistance should indicate this when arranging access to the teleconference and are encouraged to identify anticipated special needs as early as possible.

Basis For Closure: Discussions about the global network infrastructure environment and network security will contain sensitive industry information concerning specific system threats and explicit physical/cyber vulnerabilities. This information could be exploited by terrorists or other motivated adversaries.

Pursuant to Section 10(d) of FACA, the Department has determined that this discussion will likely reveal trade secrets or financial information obtained from private parties which is privileged or confidential. Pursuant to Section 10(d) of FACA, the Department has also determined that this discussion will concern matters which, if disclosed, would be likely to frustrate significantly the implementation of a proposed agency action. Accordingly, the relevant portion of this meeting will be closed to the public pursuant to 5 U.S.C. 552b(c)(4) and 552b(c)(9)(B) (1976), applied through 5 U.S.C. App. 1 *et seq.* at section 10(d) (1997).

Dated: January 11, 2008.

Lawrence Hale,

Acting Director, National Communications System.

[FR Doc. E8–2011 Filed 2–1–08; 8:45 am]

BILLING CODE 4410–10–P

DEPARTMENT OF HOMELAND SECURITY

U.S. Customs and Border Protection

Agency Information Collection Activities; Arrival and Departure Record

(Forms I–94 and I–94W)

AGENCY: U.S. Customs and Border Protection, Department of Homeland Security.

ACTION: 30-Day Notice and request for comments; Revision of an existing information collection: 1651–0111.

SUMMARY: U.S. Customs and Border Protection (CBP) of the Department of Homeland Security has submitted the following information collection request to the Office of Management and Budget (OMB) for review and approval in accordance with the Paperwork Reduction Act: Arrival and Departure Record, Forms I–94 and I–94W. This is a revision of an existing collection of information. This document is published to obtain comments from the public and affected agencies. This proposed information collection was previously published in the **Federal Register** (72 FR 63622) on November 9, 2007, allowing for a 60-day comment period. Seven public comments were received. CBP will respond to these comments. This notice allows for an additional 30 days for public comments. This process is conducted in accordance with 5 CFR 1320.10.

DATES: Written comments should be received on or before March 5, 2008.

ADDRESSES: Interested persons are invited to submit written comments on the proposed information collection to the Office of Information and Regulatory Affairs, Office of Management and Budget. Comments should be addressed to Nathan Lesser, Desk Officer, Department of Homeland Security/ Customs and Border Protection, and sent via electronic mail to *oira_submission@omb.eop.gov* or faxed to (202) 395–6974.

SUPPLEMENTARY INFORMATION: U.S. Customs and Border Protection (CBP) encourages the general public and affected Federal agencies to submit written comments and suggestions on proposed and/or continuing information collection requests pursuant to the Paperwork Reduction Act of 1995 (Pub. L.104–13). Your comments should address one of the following four points:

(1) Evaluate whether the proposed collection of information is necessary for the proper performance of the functions of the agency/component, including whether the information will have practical utility;

(2) Evaluate the accuracy of the agencies/components estimate of the burden of the proposed collection of information, including the validity of the methodology and assumptions used;

(3) Enhance the quality, utility, and clarity of the information to be collected; and

(4) Minimize the burden of the collections of information on those who are to respond, including the use of appropriate automated, electronic, mechanical, or other technological collection techniques or other forms of information technology, e.g., permitting electronic submission of responses.

Title: Arrival and Departure Record.

OMB Number: 1651–0111.

Form Number: I–94 and I–94W.

Abstract: These forms must be completed and signed by aliens arriving by commercial sea and air, who seek admission to the United States. These forms must be given to the CBP Officer at the U.S. port of entry. CBP proposes to revise this information collection by adding data fields for: e-mail address; phone number; passport issuance date; and passport expiration date to the I–94 and I–94W.

Current Actions: This submission is being submitted to revise the current information collection.

Type of Review: Revision.

Affected Public: Individuals.

Estimated Number of Respondents: 30,924,380.

Estimated Time per Respondent: 8 minutes.

Estimated Total Annual Burden Hours: 4,112,943.

Estimated Total Annualized Cost on the Public: $247,385,705.

If additional information is required contact: Tracey Denning, U.S. Customs and Border Protection, 1300 Pennsylvania Avenue, NW., Room 3.2.C, Washington, DC 20229, at 202–344–1429.

Dated: January 24, 2008.

Tracey Denning,

Agency Clearance Officer, Information Services Branch.

[FR Doc. E8–1956 Filed 2–1–08; 8:45 am]

BILLING CODE 9111–14–P

DEPARTMENT OF THE INTERIOR

Fish and Wildlife Service

[FWS–R5–R–2008–N0021; 50130–1265–0000–S3; ABC Code: S3]

Wallkill River National Wildlife Refuge, Sussex, NJ

AGENCY: Fish and Wildlife Service, Interior.

ACTION: Notice of availability: draft comprehensive conservation plan and environmental assessment; request for comments.

SUMMARY: We, the U.S. Fish and Wildlife Service (Service), announce the availability for review of the Draft Comprehensive Conservation Plan (CCP) and Environmental Assessment (EA) for Wallkill River National Wildlife Refuge (NWR). The Service prepared the Draft CCP/EA in compliance with the National Environmental Policy Act of 1969 and the National Wildlife Refuge System Administration Act of 1966, as amended by the National Wildlife Refuge System Improvement Act of 1997. We request public comments.

DATES: The Draft CCP/EA will be available for public review and comment until close of business on March 10, 2008.

ADDRESSES: You may obtain copies of the Draft CCP/EA on CD–ROM or in print by writing to Beth Goldstein, Refuge Planner, U.S. Fish and Wildlife Service, 300 Westgate Center Drive, Hadley, Massachusetts 01035, or by electronic mail at *northeastplanning@fws.gov*. You may also view the draft plan on the Web at: *http://www.fws.gov/northeast/planning/Wallkill%20River/ccphome.html*. We will host public meetings on Wednesday, Feb. 20 in Augusta, NJ and Thursday, Feb. 21 in Wantage, NJ We will post the details of each meeting 2 weeks in advance, via our project mailing list, in local papers, and at the refuge.

FOR FURTHER INFORMATION CONTACT: For more information, or to get on the project mailing list, contact Beth Goldstein, Refuge Planner, at the address above, by telephone at 413–253–8564, by fax at 413–253–8468, or by electronic mail at *Beth_Goldstein@fws.gov*.

SUPPLEMENTARY INFORMATION: The National Wildlife Refuge System Administration Act of 1966, as amended by the National Wildlife Refuge System Improvement Act of 1997 (16 U.S.C. 668dd *et seq.*), requires the Service to develop a CCP for each refuge. The purpose of developing a CCP is to

provide refuge managers with a 15-year strategy for achieving refuge purposes and contributing to the mission of the National Wildlife Refuge System (NWRS), in conformance with the sound principles of fish and wildlife science, natural resources conservation, legal mandates, and Service policies. In addition to outlining broad management direction on conserving wildlife and habitats, CCPs identify compatible wildlife-dependent recreational opportunities available to the public, including opportunities for hunting, fishing, wildlife observation and photography, and environmental interpretation and education. The Service will review and update each CCP at least once every 15 years.

Congress established the Wallkill River Refuge by law on November 16, 1990 (Section 107 of H.R. 3338; Pub. L. 101–593) with the following purposes: (1) To preserve and enhance the refuge's lands and waters in a manner that will conserve the natural diversity of fish, wildlife, plants, and their habitats for present and future generations, (2) to conserve and enhance populations of fish, wildlife, and plants within the refuge, including populations of black ducks and other waterfowl, raptors, passerines, and marsh and water birds, (3) to protect and enhance the water quality of aquatic habitats within the refuge, (4) to fulfill international treaty obligation of the United States with respect to fish and wildlife and their habitats, and (5) to provide opportunities for compatible scientific research, environmental education, and fish- and wildlife-oriented recreation (104 Stat. 2955).

The refuge encompasses approximately 5,000 acres, stretching from Sussex County, New Jersey to Orange County, New York. It is located along a 9-mile stretch of the Wallkill River, and lies in a rolling valley within the Appalachian Ridge and Valley physiographic province. The region's major wetlands are former glacial lake bottoms, and the lake's organic muck soils support extensive bottomland hardwood forests, wet meadows, and farm fields. Since establishing the refuge, we have focused primarily on conserving, restoring, and enhancing the natural diversity of fish, wildlife, plants and their habitats along the Wallkill River. Management activities include restoring wetlands, creating moist soil management units, maintaining grasslands and providing wildlife-dependent recreational opportunities.

The Draft CCP/EA evaluates three alternatives that address nine major issues identified during the planning process. Several sources generated those issues, including the public, State or Federal agencies, other Service programs, and our planning team. The Draft CCP/EA describes those issues in detail. Highlights of the alternatives follow.

Alternative A (Current Management): This alternative is the ''No Action'' alternative required by the National Environmental Policy Act of 1969 (42 U.S.C. 4321–4347, as amended). Alternative A defines our current management activities, including those planned, funded, or under way, and serves as the baseline against which to compare the other two action alternatives. It would maintain our present levels of approved refuge staffing and the biological and visitor programs. Our biological program would continue to use a variety of habitat management tools to maintain the refuge's scrub-shrub habitats, non-forested wetlands, grasslands and forested communities. We would continue efforts to protect the federally-threatened bog turtle by managing occupied sites on refuge-owned lands and attempting to acquire occupied sites within the current acquisition boundary. We would continue to offer hunt programs for deer, spring and fall turkey, woodcock, resident Canada geese, waterfowl and other migratory birds according to New Jersey State seasons. We would maintain current access sites for fishing and boating, and current trails for wildlife observation and photography. We would continue to offer limited environmental education and interpretation programs, as staffing and funding allows. Finally, we would continue to pursue the acquisition from willing sellers of the remaining 2,021 acres of important wildlife habitat that lies within our currently approved acquisition boundary.

Alternative B (the Service-preferred alternative): This alternative represents the combination of actions we believe most effectively achieves the purposes and goals of the refuge and addresses the major issues. It builds on the programs identified under current management. We would conduct field surveys of all suitable bog turtle sites on refuge-owned lands and we would develop a site management and monitoring plan for occupied and potential sites. We would hire a contractor to conduct surveys of Indiana bats (federally listed as endangered) and we would determine the feasibility of re-establishing dwarf wedgemussel (federally listed as endangered) populations on Service-owned lands. We would take a more proactive approach to restoring wetlands and establish a 100-meter forested riparian corridor along either side of the Wallkill River where it traverses the refuge. We would establish three grassland focus areas on the refuge and let other small fields revert to scrub-shrub habitat.

We would open the refuge to bear hunting according to State seasons and provide at least one additional fishing access site in the current refuge boundary. We would increase access to Service-owned lands within the current refuge by opening at least two new trails and extending an existing trail. We would also develop new interpretive materials and work with partners to expand the refuge's environmental education programs.

Alternative B proposes to expand the current approved refuge boundary by 9,550 acres through a combination of fee-simple and easement acquisition from willing sellers. The proposed expansion boundary includes four focus areas, including the 7,079-acre Papakating Creek Focus Area, which encompasses a 15-mile tributary of the Wallkill River. All four focus areas have tremendous wetland resource values, and together they form a key corridor connection between preserved habitats on the Kittatinny Ridge to the west and the Hudson Highlands to the east. Finally, they would fully complement and enhance the Federal, State and private conservation partnerships actively involved in protecting this unique ecosystem.

Alternative C: This alternative proposes to establish and maintain the ecological integrity of natural communities on the refuge and surrounding landscape without specific emphasis or concern for any particular species or species groups. Under this alternative, refuge lands would be restored to their historic condition as they existed in the Wallkill River Valley during the late 1600s. At this time, the area was thought to consist of a forested matrix dominated by floodplain forest. A bottomland hardwood forest component would be established on more than 70 percent of the current refuge. Sites prone to continuous flooding would likely be sustained as emergent marsh and shrublands. Upland sites would likely revert to a mixed mid-Atlantic hardwood forest association. We would also restore, to the extent practicable, the natural hydrologic regimen of the Wallkill River and its tributaries by removing man-made impediments to natural flow, such as the freshwater impoundments in place to benefit waterfowl.

Under Alternative C, we would allow hunting for deer and resident Canada geese only. Otherwise, public use within the current refuge boundary

would remain the same as Alternative A.

Alternative C proposes a 7,609-acre boundary expansion that includes two of the four focus areas proposed in Alternative B. These focus areas were chosen because they offer the greatest potential for restoring the natural hydrologic regimen of the Wallkill River system. As in Alternative B, those expansion lands consist of high-quality, important wildlife habitat; occur in an amount and distribution that provide us the management flexibility to achieve refuge habitat goals and objectives; and fully complement and enhance the land management of adjacent conservation partners.

We plan to announce the availability of our Draft CCP/EA in the **Federal Register** for a 30-day public review and comment period. After we evaluate and respond to public comments on the draft document, we will prepare a final CCP for review by our Regional Director. We will simultaneously submit the Land Protection Plan, outlining our expansion proposal, to the Director for his review. The Regional Director will evaluate the final CCP for agency compliance requirements, and to determine whether it will achieve refuge purposes and help fulfill the Refuge System mission. If he approves that document, and the Director concurs with the Land Protection Plan, the decision will be documented in a Finding of No Significant Impact (FONSI). We can begin implementation of the final CCP as soon as our Regional Director issues the FONSI.

Dated: September 26, 2007.

Thomas J. Healy,

Acting Regional Director, Northeast Region, U.S. Fish and Wildlife Service, Hadley, Massachusetts.

Editorial Note: This document was received at the Office of the Federal Register on January 30, 2008.

[FR Doc. E8–1936 Filed 2–1–08; 8:45 am]

BILLING CODE 4310–55–P

DEPARTMENT OF THE INTERIOR

Bureau of Indian Affairs

Proposed Agency Information Collection Activities; Comment Request

AGENCY: Bureau of Indian Affairs, Interior.

ACTION: Notice of renewal of a current approved information collection.

SUMMARY: This notice announces that the Bureau of Indian Affairs (BIA) in accordance with the Paperwork Reduction Act is soliciting comments on the Financial Assistance and Social Service program application forms in order to renew the Office of Management and Budget (OMB) clearance. This information collection request is cleared under OMB control number 1076–0017 and expires on July 31, 2008.

DATES: Written comments must be submitted on or before April 4, 2008.

ADDRESSES: Written comments or suggestion should be sent directly to Evangeline M. Campbell, Office of Indian Services, Bureau of Indian Affairs, Department of Interior, 1849 C Street, NW., MS–4513–MIB, Washington, DC 20240. Facsimile number (202) 208–2648.

FOR FURTHER INFORMATION CONTACT: Evangeline M. Campbell, 202–513–7623.

SUPPLEMENTARY INFORMATION:

I. Abstract

The information collected is necessary to be in compliance with 25 CFR part 20 and 25 U.S.C. 13. The information is used to make determinations of eligibility for the BIA's social service (financial assistance) programs: General Assistance, Child Welfare Assistance, Miscellaneous Assistance, and services only (no cash assistance).

The information is also used to insure uniformity of services, and assure the maintenance of current and accurate records for clear audit facilitating data. All information collected is retained in an individual case record and used for case management/case planning purposes. The BIA does not require an individual to maintain a record.

An agency may not conduct or sponsor, and a person is not required to respond to a collection of information unless it displays a currently valid OMB control number.

II. Request for Comments

The Department of the Interior invites comments on:

(a) Whether the collection of information is necessary for the proper performance of the functions of the BIA, including whether the information will have practical utility;

(b) The accuracy of the BIA estimate of the burden (including hours and cost) of the proposed collection of information, including the validity of the methodology and assumptions used;

(c) Ways to enhance the quality, utility, and clarity of the information to be collected; and

(d) Ways to minimize the burden of the collection of information on those who are to respond, including through the use of appropriate automated, electronic, mechanical, or other collection techniques or other forms of information technology.

Burden means the total time, or financial resources expended by persons to generate, maintain, retain, disclose or provide information to or for a Federal agency. This includes the time needed to review instructions; to develop, acquire, install and utilize technology and systems for the purpose of collection, validating, and verifying information, processing and maintaining information, and disclosing and providing information, to search data sources to complete and review the collection of information; and to transmit or otherwise disclose the information.

Please note that all comments received will be available for public review two weeks after publication in the **Federal Register**. Before including your address, phone number, e-mail address, or other personal identifying information in your comment, be advised that your entire comment—including your personal identifying information—may be made publicly available at any time. While you can ask us in your comment to withhold from public review your personal identifying information, we cannot guarantee that we will be able to do so.

It is our policy to make all comments available to the public for review at the location listed in the **ADDRESSES** section, during the hours of 7 a.m.–4 p.m., EST Monday through Friday except for legal holidays. All comments from organizations or representatives will be available for review. We may withhold comments from review for other reasons.

III. Data

Title of the collection of information: Bureau of Indian Affairs, Financial Assistance and Social Service Programs, 25 CFR part 20.

OMB Control Number: 1076–0017.

Expiration Date: July 31, 2008.

Type of Review: Extension of a currently approved collection. The information is submitted to obtain or retain benefits and for case management/case planning purposes.

Affected Entities: Individual members of Indian tribes who are living on or near a tribal service area.

Frequency of responses: One application per year.

Estimated Number of Annual Responses: 200,000

Estimated Total Annual Burden Hours: 50,000 hours.

Dated: January 16, 2008.

Carl J. Artman,

Assistant Secretary—Indian Affairs.

[FR Doc. E8–1934 Filed 2–1–08; 8:45 am]

BILLING CODE 4310–4J–P

DEPARTMENT OF THE INTERIOR

Bureau of Land Management

[Docket No. [CA–310–0777–XG]

Notice of Public Meeting: Northwest California Resource Advisory Council

AGENCY: Bureau of Land Management, Interior.

ACTION: Notice of Public Meeting.

SUMMARY: In accordance with the Federal Land Policy and Management Act of 1976 (FLPMA), and the Federal Advisory Committee Act of 1972 (FACA), the U.S. Department of the Interior, Bureau of Land Management (BLM) Northwest California Resource Advisory Council will meet as indicated below.

DATES: The meeting will be held Thursday and Friday, March 6, and 7, 2008, at the BLM Arcata Field Office, 1695 Heindon Rd., Arcata, CA. On March 6, the council members convene at 10 a.m. at the Arcata field Office, and departs immediately to a field tour of public lands managed by the Arcata Field Office. On March 7, the council convenes at 8 a.m. in the Conference Room of the Arcata Field Office. Public comments will be taken at 11 a.m.

FOR FURTHER INFORMATION CONTACT: Rich Burns, BLM Ukiah Field Office manager, (707) 468–4000; or BLM Public Affairs Officer Joseph J. Fontana, (530) 252–5332.

SUPPLEMENTARY INFORMATION: The 12-member council advises the Secretary of the Interior, through the BLM, on a variety of planning and management issues associated with public land management in Northwest California. At this meeting, agenda topics discussion of field office priority projects, land use plan development for the Lacks Creek and South Cow Mountain areas, an update on seabird monitoring in the BLM's California Coastal National Monument, management of the Sacramento River Bend area, and an update on the California Recreation Resource Advisory Council. Members will also hear status reports on activities in the Arcata, Redding and Ukiah field offices. Members of the public may present written comments to the council. Each formal council meeting will have time allocated for public comments. Depending on the number of persons wishing to speak, and the time available, the time for individual comments may be limited. Members of the public are welcome on field tours, but they must provide their own transportation and lunch. Individuals who plan to attend and need special assistance, such as sign language interpretation and other reasonable accommodations, should contact the BLM as provided above.

Dated: January 29, 2008.

Joseph J. Fontana,

Public Affairs Officer.

[FR Doc. 08–476 Filed 2–1–08; 8:45 am]

BILLING CODE 4310–40–M

DEPARTMENT OF THE INTERIOR

National Park Service

National Register of Historic Places; Notification of Pending Nominations and Related Actions

Nominations for the following properties being considered for listing or related actions in the National Register were received by the National Park Service before January 19, 2008. Pursuant to § 60.13 of 36 CFR Part 60 written comments concerning the significance of these properties under the National Register criteria for evaluation may be forwarded by United States Postal Service, to the National Register of Historic Places, National Park Service, 1849 C St. NW., 2280, Washington, DC 20240; by all other carriers, National Register of Historic Places, National Park Service, 1201 Eye St. NW., 8th floor, Washington DC 20005; or by fax, 202–371–6447. Written or faxed comments should be submitted by February 19, 2008.

J. Paul Loether,

Chief, National Register of Historic Places/National Historic Landmarks Program.

CALIFORNIA

San Francisco County

Administration Building, Treasure Island, SE. corner of Ave. of the Palms & California Ave., Treasure Island, 08000081.

Hall of Transportation, Treasure Island, California Ave. between Aves. D & F, Treasure Island, 08000082.

Palace of Fine and Decorative Arts, Treasure Island, California Ave. & Ave B, Treasure Island, 08000083.

Quarters 10 and Building 267, Yerba Buena Island, Jct. Northgate & Macalla Rds., Yerba Buena Island, 08000084.

Senior Officers Quarters Historic District, Yerba Buena Island, N. of I80, Yerba Buena Island, 08000085.

Torpedo Storehouse—Torpedo (Mine) Assembly Building & Long Range Storage Building, N. of I80, Yerba Buena Island, 08000086.

IOWA

Appanoose County

Franklin Regular Baptist Church, 135th Ave. & 590th St., Seymour, 08000087.

LOUISIANA

Acadia Parish

Istre Cemetery Grave Houses, Swift Rd., Morse, 08000088.

MASSACHUSETTS

Suffolk County

Dorchester Park, Bounded by Dorchester Ave., Richmond, Adams & Richview Sts., Boston, 08000089.

Worcester County

Parkhill Mill, 1 Oak Hill Rd., Fitchburg, 08000090.

MISSOURI

Jackson County

Vitagraph Film Exchange Building, 1703 Wyandotte St., Kansas City, 08000091.

St. Louis Independent City

Forty—Eleven Delmar, 4005–4017 Delmar Blvd., St. Louis (Independent City), 08000092.

Weber Implement and Automobile Company, (Auto-Related Resources of St. Louis, Missouri MPS) 1900 Locust St.,

NEW YORK

Albany County

Calvary Methodist Episcopal Church, 715 Morris St., Albany, 08000094.

St. Agnes Cemetery, 48 Cemetery Ave., Menands, 08000095.

Cattaraugus County

Beardsley—Oliver House, 312 Laurel Ave., Olean, 08000097.

Cayuga County

Sherwood Equal Rights Historic District, (Freedom Trail, Abolitionism, and African American Life in Central New York MPS), Sherwood Rd. & NY 34B, Sherwood, 08000096.

Dutchess County

McComb, Peter and Karen, House, 27 Hornbeck Ridge, Poughkeepsie, 08000098.

Reformed Dutch Church of Poughkeepsie, 70 Hooker Ave., Poughkeepsie, 08000099.

Erie County

Concordia Cemetery, 438 Walden Ave., Buffalo, 08000106.

Trinity Episcopal Church, 371 Delaware Ave., Buffalo, 08000100.

Fulton County

Knox Mansion, 104 W. 2nd Ave., Johnstown, 08000101.

Ontario County

Farmers and Merchants Bank, 24–26 Linden St., Geneva, 08000102.

Orange County

Walden United Methodist Church, 125 W. Main St., Walden, 08000103.

Orleans County

Servoss House, 3963 Fruit Ave., Medina, 08000104.

Rockland County

North Main Street School, 185 N. Main St., Spring Valley, 08000105.

Seneca County

Graves, John, Cobblestone Farmhouse, (Cobblestone Architecture of New York State MPS), 1370 NY 318, Junius, 08000107.

St. Lawrence County

Village Park Historic District (Boundary Increase II), 7-1/2, 9 & 11 E. Main St., Canton, 08000108.

Suffolk County

Brewster House, Jct. of NY 25A & Runs Rd., East Setauket, 08000109.

Westchester County

Scarsdale Woman's Club, 37 Drake Rd., Scarsdale, 08000110.

NORTH CAROLINA

Forsyth County

Reynoldstown Historic District, Portions of 800 & 900 blks. of Camel, Cameron, Graham, Jackson & Rich Aves., E. 10th St.& Cameron Ave Bridge, Winston-Salem, 08000111.

OHIO

Clermont County

Pleasant Hill, 909 OH 131, Milford, 08000112.

Cuyahoga County

Cleveland Club, 10660 Carnegie Ave., Cleveland, 08000113.

Geauga County

Chardon Post Office Building, 121 South St., Chardon, 08000114.

Hamilton County

German Evangelical Protestant Cemetery Chapel, 3701 Vine St., Cincinnati, 08000115.

Parkside Apartments, 3315–3317 Jefferson Ave., Cincinnati, 08000116.

Lorain County

Grafton School, 1111 Elm St., Grafton, 08000117.

OREGON

Marion County

Oregon State Hospital Historic District, Roughly bounded by D St., Park Ave., 24th St. & Bates Dr., Salem, 08000118.

Multnomah County

Cohn—Sichel House, 2205 NW. Johnson St., Portland, 08000119.

WISCONSIN

Rock County

Evansville Standpipe, 288 N. 4th St., Evansville, 08000120.

Winnebago County

Beals, Edward D. & Vina Shattuck, House, 220 N. Park Ave., Neenah, 08000121.

[FR Doc. E8–2020 Filed 2–1–08; 8:45 am]

BILLING CODE 4310–70–P

INTERNATIONAL TRADE COMMISSION

[Investigation No. 332–497]

Advice Concerning Possible Modifications to the U.S. Generalized System of Preferences, 2007 Review of Competitive Need Limit Waivers

AGENCY: United States International Trade Commission.

ACTION: Institution of investigation and scheduling of hearing.

SUMMARY: Following receipt on January 18, 2008, of a request from the United States Trade Representative (USTR) under section 332(g) of the Tariff Act of 1930 (19 U.S.C. 1332(g)), the Commission instituted investigation No. 332–497, *Advice Concerning Possible Modifications to the U.S. Generalized System of Preferences, 2007 Review of Competitive Need Limit Waivers*.

DATES:

February 11, 2008: Deadline for filing requests to appear at the public hearing

February 12, 2008: Deadline for filing pre-hearing briefs and statements

February 28, 2008: Public hearing

March 7, 2008: Deadline for filing post-hearing briefs and statements and other written submissions

April 17, 2008: Transmittal of report to USTR

ADDRESSES: All Commission offices, including the Commission's hearing rooms, are located in the United States International Trade Commission Building, 500 E Street, SW., Washington, DC. All written submissions, including requests to appear at the hearing, statements, and briefs, should be addressed to the Secretary, United States International Trade Commission, 500 E Street, SW., Washington, DC 20436.

FOR FURTHER INFORMATION CONTACT: Information may be obtained from Cynthia B. Foreso, Project Leader, Office of Industries (202–205–3348 or *cynthia.foreso@usitc.gov*) or Eric Land, Deputy Project Leader, Office of Industries (202–205–3349 or *eric.land@usitc.gov*). For more information on legal aspects of the investigation, contact William Gearhart of the Commission's Office of the General Counsel (202–205–3091 or *william.gearhart@usitc.gov*). The media should contact Margaret O'Laughlin, Office of External Relations (202–205–1819 or *margaret.olaughlin@usitc.gov*). Hearing-impaired individuals may obtain information on this matter by contacting the Commission's TDD terminal at 202–205–1810. General information concerning the Commission may also be obtained by accessing its internet server (*http://www.usitc.gov*). The public record for this investigation may be viewed on the Commission's electronic docket (EDIS–ONLINE) at *http://www.usitc.gov/secretary/edis.htm*. Persons with mobility impairments who will need special assistance in gaining access to the Commission should contact the Office of the Secretary at 202–205–2000.

Background: As requested by the USTR, under the authority delegated by the President, pursuant to section 332(g) of the Tariff Act of 1930 and in accordance with section 503(d)(1)(A) of the Trade Act of 1974 (1974 Act) (19 U.S.C. 2463(d)(1)(A)), the Commission will provide advice on whether any industry in the United States is likely to be adversely affected by a waiver of the competitive need limitations specified in section 503(c)(2)(A) of the 1974 Act for the following countries and articles: Argentina for HTS subheading 4107.91.80; India for HTS subheading 2001.10.00; Indonesia for HTS subheadings 3907.60.00 and 4011.10.10; and Turkey for HTS subheading 7413.00.50. As requested, the Commission will also provide advice as to the probable economic effect on consumers of the petitioned waivers. As requested by USTR, the Commission will use the dollar value limit of $130,000,000 for purposes of section 503(c)(2)(A)(i)(I) of the 1974 Act.

As requested by the USTR, the Commission will provide its advice by April 17, 2008. The USTR indicated that those sections of the Commission's report and related working papers that contain the Commission's advice will be classified as ''confidential.''

Public Hearing: A public hearing in connection with this investigation will be held beginning at 9:30 a.m. on February 28, 2008 at the United States International Trade Commission Building, 500 E Street, SW., Washington, DC. All persons have the right to appear by counsel or in person, to present information, and to be heard. Persons wishing to appear at the public hearing should file a letter with the Secretary, United States International

Trade Commission, 500 E St., SW., Washington, DC 20436, not later than the close of business (5:15 p.m.) on February 11, 2008, in accordance with the requirements in the ''Submissions'' section below.

Written Submissions: In lieu of or in addition to participating in the hearing, interested parties are invited to submit written statements or briefs concerning these investigations. All written submissions, including requests to appear at the hearing, statements, and briefs, should be addressed to the Secretary, United States International Trade Commission, 500 E Street, SW., Washington, DC 20436. Pre-hearing briefs and statements should be filed not later than 5:15 p.m., February 12, 2008; and post-hearing briefs and statements and all other written submissions should be filed not later than 5:15 p.m., March 7, 2008. All written submissions must conform with the provisions of section 201.8 of the *Commission's Rules of Practice and Procedure* (19 CFR. 201.8). Section 201.8 of the rules requires that a signed original (or a copy designated as an original) and fourteen (14) copies of each document be filed. In the event that confidential treatment of the document is requested, at least four (4) additional copies must be filed, in which the confidential information must be deleted (see the following paragraph for further information regarding confidential business information). The Commission's rules do not authorize filing submissions with the Secretary by facsimile or electronic means, except to the extent permitted by section 201.8 of the rules (see Handbook for Electronic Filing Procedures, *http://www.usitc.gov/secretary/fed_reg_notices/rules/documents/handbook_on_electronic_filing.pdf*). Persons with questions regarding electronic filing should contact the Secretary (202–205–2000). Any submissions that contain confidential business information must also conform with the requirements of section 201.6 of the *Commission's Rules of Practice and Procedure* (19 CFR 201.6). Section 201.6 of the rules requires that the cover of the document and the individual pages be clearly marked as to whether they are the ''confidential'' or ''nonconfidential'' version, and that the confidential business information be clearly identified by means of brackets. All written submissions, except for confidential business information, will be made available in the Office of the Secretary to the Commission for inspection by interested parties.

The Commission may include some or all of the confidential business information submitted in the course of the investigation in the report it sends to the USTR. As requested by the USTR, the Commission will publish a public version of the report, which will exclude portions of the report that the USTR has classified as confidential as well as any confidential business information.

Issued: January 29, 2008.

By order of the Commission.

Marilyn R. Abbott,

Secretary to the Commission.

[FR Doc. E8–1937 Filed 2–1–08; 8:45 am]

BILLING CODE 7020–02–P

DEPARTMENT OF JUSTICE

Notice of Lodging of Consent Decree Under the Comprehensive Environmental Response, Compensation, and Liability Act (CERCLA) and Clean Water Act (CWA)

Notice is hereby given that on January 22, 2008, a proposed Consent Decree (Decree) in the case of *United States, et al.* v. *United States Steel Corp.*, Civil Action No. 08–CV–4091–RDR–KGS, was lodged with the United States District Court for the District of Kansas. The United States, the Kansas Department of Health and Environment (KDHE), and the Secretary of KDHE (the federal and state trustees) filed the complaint in their capacities as natural resource trustees. The federal and state trustees seek recovery of natural resources for natural resource damages in connection with the Cherokee Lanyon #2 Site and the Girard Zinc Site (together, the Sites) in Girard, Kansas and the surrounding area. The Complaint alleges that the defendant, United States Steel Corporation (U.S. Steel), is liable as an owner or operator of smelters that were located at each of the Sites, or as a successor to owners or operators of the smelters.

The Decree would settle the claims for injuries to natural resources at the Site in return for a total payment of $133,400, which includes $123,255 for restoration projects and $10,145 for reimbursement of natural resource damage assessment costs incurred by the federal and state trustees. As specified by the Decree, the joint recovery for restoration work would be deposited in the Natural Resource Damage Assessment and Restoration Fund administered by the United States Department of the Interior, and the federal and state trustees would make joint decisions concerning future restoration expenditures in accordance with a restoration plan that they would prepare.

For thirty (30) days after the date of this publication, the Department of Justice will receive comments relating to the Consent Decree. Comments should be addressed to the Assistant Attorney General, Environment and Natural Resources Division, and either e-mailed to *pubcomment-ees.enrd@usdoj.gov* or mailed to P.O. Box 7611, U.S. Department of Justice, Washington, DC 20044–7611. In either case, the comments should refer to *United States, et al.* v. *United States Steel Corp.*, D.J. Ref. No. 90–11–3–08705/2.

The Decree may be examined at the Office of the United States Attorney, 1200 Epic Center, 301 N. Main, Wichita, Kansas 67202. During the comment period, the Consent Decree may be examined on the following Department of Justice Web site: *http://www.usdoj.gov/enrd/Consent_Decrees.html*. A copy of the Consent Decree may also be obtained by mail from the Consent Decree Library, P.O. Box 7611, U.S. Department of Justice, Washington, DC 20044–7611, or by faxing or e-mailing a request to Tonia Fleetwood (*tonia.fleetwood@usdoj.gov*), fax no. (202) 514–0097, phone confirmation number (202) 514–1547. In requesting a copy from the Consent Decree Library, please enclose a check in the amount of $5.50 (25 cents per page reproduction cost) payable to the United States Treasury or, if by e-mail or fax, forward a check in that amount to the Consent Decree Library at the stated address.

Robert E. Maher, Jr.,

Assistant Section Chief, Environmental Enforcement Section, Environment and Natural Resources Division.

[FR Doc. E8–1921 Filed 2–1–08; 8:45 am]

BILLING CODE 4410–15–P

DEPARTMENT OF JUSTICE

Notice of Lodging of Consent Decree Under the Comprehensive Environmental Response, Compensation, and Liability Act

Notice is hereby given that a proposed Consent Decree with Solutia, Inc., in the case of *United States* v. *Mallinckrodt, Inc.; Shell Oil Company; and Solutia, Inc.*, Civil Action No. 4:02–1488, was lodged with the United States District Court for the Eastern District of Missouri on January 28, 2008. The United States filed the Complaint in 2002 on behalf of the Administrator of the Environmental Protection Agency pursuant to the Comprehensive Environmental Response, Compensation, and Liability Act of 1980, as amended, 42 U.S.C. 9601, *et seq.* (CERCLA), seeking

recovery of costs incurred in responding to the release or threat of release of hazardous substances at or in connection with the Great Lakes Container Corporation Superfund Site at 42 Ferry Street in St. Louis, Missouri (Site). The complaint alleges claims against Solutia and two other defendants. The Consent Decree referred to in this Notice addresses only the claims against Solutia.

In 2003, Solutia filed a petition for reorganization under Chapter 11 of Title 11 of the Bankruptcy Code in the Bankruptcy Court for the Southern District of New York. On or about November 30, 2004, the United States filed a Proof of Claim asserting claims against Solutia under CERCLA for, among other things, EPA's response costs for the Site.

The Consent Decree will resolve the United States' claims against Solutia for the Site by providing that the United States shall be allowed a General Unsecured Claim, as that term is defined in Solutia's reorganization plan, in the amount of $3,600,000.00.

For thirty (30) days after the date of this publication, the Department of Justice will receive comments relating to the Consent Decree. Comments should be addressed to the Assistant Attorney General, Environment and Natural Resources Division, and either e-mailed to *pubcomment-ees.enrd@usdoj.gov* or mailed to P.O. Box 7611, U.S. Department of Justice, Washington, DC 20044–7611. In either case, the comments should refer to *United States* v. *Mallinckrodt, Inc., et al.*, DOJ Ref. No. 90–11–3–07280.

The proposed consent decree may be examined at the office of the United States Attorney, United States Attorney's Office, Eastern District of Missouri, Thomas F. Eagleton Courthouse, 111 South 10th Street, 20th Floor, St. Louis, Missouri, and at the Region VII Office of the Environmental Protection Agency, 901 North 5th Street, Kansas City, Kansas. During the comment period, the Consent Decree may be examined on the following Department of Justice Web site: *http://www.usdoj.gov/enrd/Consent_Decrees.html*. A copy of the Consent Decree may also be obtained by mail from the Consent Decree Library, P.O. Box 7611, U.S. Department of Justice, Washington, DC 20044–7611, or by faxing or e-mailing a request to Tonia Fleetwood (*tonia.fleetwood@usdoj.gov*), fax no. (202) 514–0097, phone confirmation number (202) 514–1547. In requesting a copy from the Consent Decree Library, please enclose a check in the amount of $4.00 (25 cents per page reproduction cost) payable to the United States Treasury or, if by e-mail or fax, forward a check in that amount to the Consent Decree Library at the stated address.

Robert E. Maher, Jr.,

Assistant Section Chief, Environmental Enforcement Section, Environment and Natural Resources Division.

[FR Doc. E8–1922 Filed 2–1–08; 8:45 am]

BILLING CODE 4410–15–P

DEPARTMENT OF JUSTICE

Parole Commission

Record of Vote of Meeting Closure (Pub. L. 94–409; 5 U.S.C. Sec. 552b)

I, Edward F. Reilly, Jr., Chairman of the United States Parole Commission, was present at a meeting of said Commission, which started at approximately 11:30 a.m., on Thursday, January 17, 2008, at the U.S. Parole Commission, 5550 Friendship Boulevard, 4th Floor, Chevy Chase, Maryland 20815. The purpose of the meeting was to decide one petition for reconsideration pursuant to 28 CFR 2.27. Three Commissioners were present, constituting a quorum when the vote to close the meeting was submitted.

Public announcement further describing the subject matter of the meeting and certifications of General Counsel that this meeting may be closed by vote of the Commissioners present were submitted to the Commissioners prior to the conduct of any other business. Upon motion duly made, seconded, and carried, the following Commissioners voted that the meeting be closed: Edward F. Reilly, Jr., Cranston J. Mitchell and Isaac Fulwood, Jr.

In witness whereof, I make this official record of the vote taken to close this meeting and authorize this record to be made available to the public.

Dated: January 17, 2008.

Edward F. Reilly, Jr.,

Chairman, U.S. Parole Commission.

[FR Doc. 08–471 Filed 2–1–08; 8:45 am]

BILLING CODE 4410–01–M

NUCLEAR REGULATORY COMMISSION

[Docket No. 50–302]

Florida Power Corporation, et al.; Notice of Consideration of Issuance of Amendment to Facility Operating License, Proposed No Significant Hazards Consideration Determination, and Opportunity for a Hearing; Correction

AGENCY: Nuclear Regulatory Commission.

ACTION: Notice of Issuance; Correction.

SUMMARY: This document corrects a notice appearing in the **Federal Register** on January 15, 2008 (73 FR 2553), which informed the public that the NRC issued Amendment No. 228 to Facility Operating License No. DPR–72 for Crystal River Unit No. 3 Nuclear Generating Plant. This action is necessary to correct the date of issuance.

FOR FURTHER INFORMATION CONTACT: Stewart N. Bailey, Office of Nuclear Reactor Regulation, U.S. Nuclear Regulatory Commission, Washington, DC 20555–0001; telephone (301) 415–1321, e-mail: *SNB@nrc.gov*.

SUPPLEMENTARY INFORMATION: On page 2554, appearing near the top of the first column, after *Date of Issuance:* the date is corrected to read December 26, 2007.

Dated in Rockville, Maryland, this 28th day of January 2008.

For the Nuclear Regulatory Commission.

Stewart N. Bailey,

Senior Project Manager, Plant Licensing Branch II–2, Division of Operating Reactor Licensing, Office of Nuclear Reactor Regulation.

[FR Doc. E8–1945 Filed 2–1–08; 8:45 am]

BILLING CODE 7590–01–P

NUCLEAR REGULATORY COMMISSION

[Docket No. 52–017]

Dominion Virginia Power; Acceptance for Docketing of an Application for Combined License for North Anna Unit 3

By letter dated November 26, 2007, as supplemented by letters dated January 17 and 28, 2008, Dominion Virginia Power (Dominion) submitted an application to the U.S. Nuclear Regulatory Commission (NRC) for a combined license (COL) for one economic simplified boiling water reactor (ESBWR) in accordance with the requirements contained in 10 CFR part 52, ''Licenses, Certifications and Approvals for Nuclear Power Plants.''

The reactor will be identified as North Anna Unit 3 and located at the North Anna Power Station in Louisa County, Virginia. A notice of receipt and availability of this application was previously published in the **Federal Register** (72 FR 70619) on December 12, 2007.

The NRC staff has determined that Dominion has submitted information in accordance with 10 CFR part 2, ''Rules of Practice for Domestic Licensing Proceedings and Issuance of Orders,'' and 10 CFR part 52 that is acceptable for docketing. The docket number established for this COL application is 52–017.

The NRC staff will perform a detailed technical review of the COL application. Docketing of the COL application does not preclude the NRC from requesting additional information from the applicant as the review proceeds, nor does it predict whether the Commission will grant or deny the application. The Commission will conduct a hearing in accordance with subpart L, ''Informal Hearing Procedures for NRC Adjudications,'' of 10 CFR part 2 and will receive a report on the COL application from the Advisory Committee on Reactor Safeguards in accordance with 10 CFR 52.87, ''Referral to the Advisory Committee on Reactor Safeguards (ACRS).'' If the Commission finds that the COL application meets the applicable standards of the Atomic Energy Act and the Commission's regulations, and that required notifications to other agencies and bodies have been made, the Commission will issue a COL, in the form and containing conditions and limitations that the Commission finds appropriate and necessary.

In accordance with 10 CFR part 51, the Commission will also prepare an environmental impact statement for the proposed action. Pursuant to 10 CFR 51.26, and as part of the environmental scoping process, the staff intends to hold a public scoping meeting. Detailed information regarding this meeting will be included in a future **Federal Register** notice.

Finally, the Commission will announce in a future **Federal Register** notice the opportunity to petition for leave to intervene in the hearing required for this application by 10 CFR 52.85.

Documents may be examined, and/or copied for a fee, at the NRC's Public Document Room (PDR), located at One White Flint North, Public File Area O1 F21, 11555 Rockville Pike (first floor), Rockville, Maryland 20852, and will be accessible electronically through the Agencywide Documents Access and Management System (ADAMS) Public Electronic Reading Room link at the NRC Web site *http://www.nrc.gov/reading-rm/adams.html*. The application is also available at *http://www.nrc.gov/reactors/new-licensing/col.html*. Persons who do not have access to ADAMS or who encounter problems in accessing documents located in ADAMS should contact the NRC PDR Reference staff by telephone at 1–800–397–4209, or 301–415–4737, or by e-mail to *pdr@nrc.gov*.

Dated at Rockville, Maryland this 28th day of January 2008.

For the Nuclear Regulatory Commission.

Thomas A. Kevern,

Senior Project Manager, ESBWR/ABWR Projects Branch 1, Division of New Reactor Licensing, Office of New Reactors.

[FR Doc. E8–1942 Filed 2–1–08; 8:45 am]

BILLING CODE 7590–01–P

NUCLEAR REGULATORY COMMISSION

Notice of Opportunity To Comment on Model Safety Evaluation on Technical Specification Improvement To Revise Containment Isolation Valve Completion Times (TSTF–498, Revision 1) Using the Consolidated Line Item Improvement Process

AGENCY: Nuclear Regulatory Commission.

ACTION: Request for comment.

SUMMARY: Notice is hereby given that the staff of the Nuclear Regulatory Commission (NRC) has prepared a model safety evaluation (SE) relating to the modification of technical specification (TS) 3.6.3, Containment Isolation Valves associated with implementation of BAW–2461–A, ''Risk-Informed Justification for Containment Isolation Valve Allowed Outage Time Change.'' The NRC staff has also prepared a model license amendment request and a model no significant hazards consideration (NSHC) determination relating to this matter. The purpose of these models are to permit the NRC to efficiently process amendments that propose to modify TS Containment Isolation Valve Completion Times. Licensees of nuclear power reactors to which the models apply could then request amendments, confirming the applicability of the SE and NSHC determination to their reactors. The NRC staff is requesting comment on the model SE and model NSHC determination prior to announcing their availability for referencing in license amendment applications.

DATES: The comment period expires March 5, 2008. Comments received after this date will be considered if it is practical to do so, but the Commission is able to ensure consideration only for comments received on or before this date.

ADDRESSES: Comments may be submitted either electronically or via U.S. mail.

Submit written comments to Chief, Rulemaking, Directives, and Editing Branch, Division of Administrative Services, Office of Administration, Mail Stop: T–6 D59, U.S. Nuclear Regulatory Commission, Washington, DC 20555–0001. Hand deliver comments to: 11545 Rockville Pike, Rockville, Maryland, between 7:45 a.m. and 4:15 p.m. on Federal workdays. Copies of comments received may be examined at the NRC's Public Document Room, 11555 Rockville Pike (Room O–1F21), Rockville, Maryland. Comments may be submitted by electronic mail to *CLIIP@nrc.gov.*

FOR FURTHER INFORMATION CONTACT: Timothy Kobetz, Mail Stop: O–12H2, Technical Specifications Branch, Division of Inspection & Regional Support, Office of Nuclear Reactor Regulation, U.S. Nuclear Regulatory Commission, Washington, DC 20555–0001, telephone 301–415–1932.

SUPPLEMENTARY INFORMATION:

Background

Regulatory Issue Summary 2000–06, ''Consolidated Line Item Improvement Process for Adopting Standard Technical Specification Changes for Power Reactors,'' was issued on March 20, 2000. The consolidated line item improvement process (CLIIP) is intended to improve the efficiency of NRC licensing processes, by processing proposed changes to the standard technical specifications (STS) in a manner that supports subsequent license amendment applications. The CLIIP includes an opportunity for the public to comment on proposed changes to the STS after a preliminary assessment by the NRC staff and finding that the change will likely be offered for adoption by licensees. This notice solicits comment on a proposed change to the STS that modifies TS Containment Isolation Valve Completion Times. The CLIIP directs the NRC staff to evaluate any comments received for a proposed change to the STS and to either reconsider the change or announce the availability of the change for adoption by licensees. Licensees opting to apply for this TS change are responsible for reviewing the staff's evaluation, referencing the

applicable technical justifications, and providing any necessary plant-specific information. Each amendment application made in response to the notice of availability will be processed and noticed in accordance with applicable rules and NRC procedures.

This notice involves the modification of TS Containment Isolation Valve Completion Times. This change was proposed for incorporation into the standard technical specifications by the Owners Groups participants in the Technical Specification Task Force (TSTF) and is designated TSTF–498. TSTF–498 can be viewed on the NRC's Web page at: *http://www.nrc.gov/reactors/operating/licensing/techspecs.html.*

Applicability

To efficiently process the incoming license amendment applications, the staff requests that each licensee applying for the changes proposed in TSTF–498 include TS Bases for the proposed TS consistent with the TS Bases proposed in TSTF–498. The staff is requesting that the TS Bases be included with the proposed license amendments in this case because the changes to the TS and the changes to the associated TS Bases form an integral change to a plant's licensing basis. To ensure that the overall change, including the TS Bases (which becomes part of the plant licensing basis), includes appropriate regulatory controls, the staff plans to condition the issuance of each license amendment on the licensee's incorporation of the changes into the TS Bases document and that the licensee control changes to the TS Bases in accordance with the licensee's TS Bases Control Program. The CLIIP does not prevent licensees from requesting an alternative approach or proposing the changes without the requested TS Bases. However, deviations from the approach recommended in this notice may require additional review by the NRC staff and may increase the time and resources needed for the review. Additionally, the staff is requesting that the methodology for assessing large early release frequency (LERF) and incremental conditional large early release probability (ICLERP) are to be documented in the plant-specific application as a regulatory commitment (i.e., included in the licensee's commitment tracking system in accordance with NEI 99–04, Revision 0, ''Guidelines for Managing NRC Commitment Changes'') (Reference 5) in the licensees' plant-specific applications referencing TR BAW–2461–A. The staff is requesting this regulatory commitment because a licensee's implementation of Regulatory Guide (RG) 1.177 Tier 3 guidelines generally implies the assessment of risk with respect to core damage frequency (CDF). However, the proposed containment isolation valve (CIV) completion time (CT) impacts containment isolation and consequently LERF and ICLERP, as well as CDF. Because the extended CIV CTs are also based on the LERF and ICLERP metrics, the management of risk in accordance with 10 CFR 50.65(a)(4) for these extended CIV CTs must also assess LERF and ICLERP.

Public Notices

This notice requests comments from interested members of the public within 30 days of the date of publication in the **Federal Register**. After evaluating the comments received as a result of this notice, the staff will either reconsider the proposed change or announce the availability of the change in a subsequent notice (perhaps with some changes to the safety evaluation or the proposed no significant hazards consideration determination as a result of public comments). If the staff announces the availability of the change, licensees wishing to adopt the change must submit an application in accordance with applicable rules and other regulatory requirements. For each application the staff will publish a notice of consideration of issuance of amendment to facility operating licenses, a proposed no significant hazards consideration determination, and a notice of opportunity for a hearing. The staff will also publish a notice of issuance of an amendment to the operating license to announce the modification of Containment Isolation Valve (CIV) Completion Times for each plant that receives the requested change.

Proposed Safety Evaluation; U.S. Nuclear Regulatory Commission; Office of Nuclear Reactor Regulation; Consolidated Line Item Improvement; Technical Specification Task Force (TSTF) Change TSTF–498; Modification of Technical Specification Containment Isolation Valve; Completion Times

1.0 Introduction

By letter dated December 20, 2006, (Reference 1) the Technical Specifications Task Force (TSTF), a joint owners group activity, submitted TSTF–498, ''Risk-Informed Containment Isolation Valve Completion Times (BAW–2461),'' Revision 0, for NRC review. By letter dated October 10, 2007, (Reference 2) the TSTF submitted Revision 1 to TSTF–498 based on responses to Requests for Additional Information (RAI) that resulted in not adopting certain provisions provided by BAW–2461–A, ''Risk-Informed Justification for Containment Isolation Valve Allowed Outage Time Change,'' (Reference 3). TSTF–498 is proposing to change NUREG 1430, ''Standard Technical Specifications Babcock and Wilcox Plants,'' (BAW STS) Revision 3.0 (Reference 4), to generically implement containment isolation valve completion time (CT) changes associated with implementation of BAW–2461–A.

BAW–2461–A and TSTF–498 support extending CTs for CIVs in a penetration flow path with two [or more] containment isolation valves from 4 hours to 168 hours. The proposed change revises the TS for B&W Plants, NUREG–1430, Revision 3, Limiting Condition for Operation (LCO), Section 3.6.3, ''Containment Isolation Valves,'' Condition A from 4 hours to 7 days. Additionally, a new Required Action is added (Required Action A.1) which requires verification that the Operable containment isolation valve in the penetration is not inoperable due to common cause failure and also results in Required Actions A.1 and A.2 being relabeled as A.2 and A.3. No change is proposed by the Pressurized Water Reactor Owners Group (PWROG) for Condition B (relabeled Condition D)(i.e., a penetration flow path with two inoperable CIVs). A new Condition, Condition B, is added which is similar to the existing Condition A. It contains a 4 hour Completion Time to isolate the affected flow path and is only applicable to the containment isolation valves excluded from Condition A (e.g., containment isolation valves in the main steam lines or (as described in a Reviewer's Note) those identified by plant-specific analysis as having high risk significance for interfacing systems loss of coolant accidents (ISLOCAs). A new Condition, Condition C, is added which is applicable when two or more penetrations have one inoperable containment isolation valve. This Condition requires isolating all but one of the affected penetrations within 4 hours (the existing Completion Time for Condition A). This condition limits the 7 day Completion Time in Condition A to a single penetration. The extended Completion Time is not applicable to containment isolation valves in the main steam lines or those identified by plant-specific analysis as having high risk significance for ISLOCAs and the existing 4 hour Completion Time applies. BAW–2461–A is only applicable to Davis Besse, Oconee Nuclear Station Units 1, 2, and 3, and

Crystal River Unit 3. Other licensees of B&W designed PWRs requesting to use the Topical Report (TR) methodology must provide the same level of information provided by these demonstration plants to ensure that TR BAW–2461–A is applicable to their plant. TSTF–498 will provide standardized wording in the B&W STS for plants implementing the changes specified in BAW–2461–A related to extending AOTs for applicable inoperable CIVs from 4 hours to 168 hours.

2.0 Regulatory Evaluation

In 10 CFR 50.36, the Commission established its regulatory requirements related to the content of TS. Pursuant to 10 CFR 50.36, TS are required to include items in the following five specific categories related to station operation: (1) Safety limits, limiting safety system settings, and limiting control settings; (2) limiting conditions for operation (LCOs); (3) surveillance requirements (SRs); (4) design features; and (5) administrative controls. However, the regulation does not specify the particular TSs to be included in a plant's license. TSTF–498 is proposing changes to the TSs that involve category 2 above. The LCOs are the lowest functional capability, or performance levels, of equipment required for safe operation of the facility. When an LCO of a nuclear reactor is not met, the licensee shall shut down the reactor, or follow any remedial actions permitted by the TS until the condition can be met.

Furthermore, the CTs specified in the TSs must be based on reasonable protection of the public health and safety. Therefore, the NRC staff must be able to conclude that there is reasonable assurance that the safety functions affected by the proposed TS CT changes will be performed in accordance with the design basis accidents (DBAs) identified in Chapter 15 of the licensee's final safety analysis report (FSAR). As set forth in 10 CFR 50.36, a licensee's TS must establish the LCOs that contain certain information. This requirement includes CTs for structures, systems, and components (SSCs) that are required for safe operation of the facility, such as CIVs.

The Maintenance Rule, 10 CFR 50.65, ''Requirements for monitoring the effectiveness of maintenance at nuclear power plants,'' requires licensees to monitor the performance, or condition, of SSCs against licensee-established goals in a manner sufficient to provide reasonable assurance that SSCs are capable of fulfilling their intended functions. The implementation and monitoring program guidance of Regulatory Guide (RG) 1.174, section 2.3, and RG 1.177, section 3, states that monitoring performed in conformance with the Maintenance Rule can be used when such monitoring is sufficient for the SSCs affected by the risk-informed application.

In addition, 10 CFR 50.65(a)(4), as it relates to the proposed CIV CT extension, requires the assessment and management of the increase in risk that may result from the proposed maintenance activity.

Appendix A of 10 CFR part 50, GDC–54, ''Piping systems penetrating containment,'' requires those piping systems that penetrate primary containment be provided with leak detection, isolation, and containment capabilities having redundancy, reliability, and performance capabilities that reflect the importance to safety of isolating these piping systems.

Appendix A of 10 CFR part 50, GDC–55, ''Reactor coolant pressure boundary penetrating containment,'' requires that each line that is part of the reactor coolant pressure boundary and that penetrates the primary containment shall be provided with CIVs.

Appendix A of 10 CFR part 50, GDC–56, ''Primary containment isolation,'' requires that each line that connects directly to the containment atmosphere and penetrates the primary reactor containment shall be provided with CIVs.

The CIVs help ensure that adequate primary containment boundaries are maintained during and after accidents by minimizing potential pathways to the environment and help ensure that the primary containment function assumed in the safety analysis is maintained.

2.1 Proposed Change

TSTF–498 would make the following changes to the B&W STS contained in NUREG–1430 associated with TS 3.6.3 Containment Isolation Valves (CIVs):

- The proposed change adds a Reviewer's Note prior to Condition A which states ''The Condition A Note should list the specific penetrations (if any) identified by the plant specific risk analysis as having high risk significance for an interfacing systems loss of coolant accident (ISLOCA).''
- The proposed change revises the Condition A NOTE to add ''except containment isolation valves in the main steam lines and [ ].''
- The proposed change adds the new Required Action A.1, ''Determine the OPERABLE containment isolation valve in the affected penetration is not inoperable due to common cause failure'' with a Completion Time of 4 hours. This new Required Action is connected by an *AND* statement to the other applicable Required Actions.
- The proposed change revises the previous Required Action A.1 to be A.2 with the completion time changed from 4 hours to 7 days.
- The proposed change revises the previous Required Action A.2 to be A.3.
- The proposed change adds a new Condition B for one or more penetration flow paths with one containment isolation valve inoperable [for reasons other than purge valve leakage not within limit] with a Note stating ''Only applicable to penetration flow paths with two [or more] containment isolation valves in the main steam lines and [ ].'' There is also a Reviewers Note similar to Condition A.
- The proposed change provides new Required Action B.1 to isolate the affected penetration flow path with a completion time of 4 hours and Required Action B.2 to verify the affected penetration flow path is isolated once per 31 days for isolation devices outside containment and Prior to entering Mode 4 from Mode 5 if not performed within the previous 92 days for isolation devices inside containment. Furthermore, new Required Action B.2 has two notes which state: (1) Isolation devices in high radiation areas may be verified by use of administrative means and (2) Isolation devices that are locked, sealed, or otherwise secured may be verified by use of administrative means.
- The proposed change adds a new Condition C for two or more penetration flow paths with one containment isolation valve inoperable [for reasons other than Condition[s] [E and F]] with a Note stating ''Only applicable to penetration flow paths with two [or more] containment isolation valves.
- The proposed change provides new Required Action C.1 to isolate all but one of the affected penetration flow paths by use of at least one closed and de-activated automatic valve, closed manual valve, or blind flange with a completion time of 4 hours.
- The proposed change revises the previous Condition B and Required Action B.1 to be new Condition D and Required Action D.1.
- The proposed change revises the previous Condition C and Required Action C.1 and C.2 to be new Condition E and Required Action E.1 and E.2.
- The proposed change revises the previous Condition D and Required Action D.1, D.2 and D.3 to be new Condition F and Required Action F.1, F.2 and F.3.
- The proposed change revises the previous reference to Required Action

D.1 for performance of SR 3.6.3.6 within Required Action D.3 to Required Action F.1.

• The proposed change revises the previous Condition E and Required Action E.1 and E.2 to be new Condition G and Required Action G.1 and G.2.

TSTF–498 includes changes to the B&W STS Bases B 3.6.3 contained in NUREG–1430.

• Condition A has been modified by a Note indicating this Condition is only applicable to those penetration flow paths with two [or more] containment isolation valves. The Note also states that the Condition is not applicable to containment isolation valves in the main steam lines and [any specific penetrations identified by the plant-specific risk analysis as having high risk significance for an ISLOCA. The previous discussion about the Note has been deleted. Additionally, a new Required Action A.1 has been added to determine that the operable containment isolation valve in the affected penetration is not inoperable due to a common cause failure with a completion time of 4 hours. The other Condition A Required Actions have been re-numbered and Required Action A.2 Completion Time has been changed from 4 hours to 7 days.

• The bases has been revised to update Required Action A.2 from 4 hours to 7 days based on an analysis of plant risk and the discussion on considering the time required to isolate the penetration and the relative importance of supporting containment operability has been deleted.

• A new Condition B has been added with a Note indicating this Condition is only applicable to those penetration flow paths with two [or more] containment isolation valves that are containment isolation valves in the main steam lines or are [any specific penetrations identified by the plant-specific risk analysis as having high risk significance for an interfacing systems loss of coolant accident (ISLOCA)]. Condition B is entered if one containment isolation valve in one or more penetration flow paths is inoperable, [except for purge valve leakage not within limit.] The Bases describes Required Actions B.1 and B.2 Completion Times and Notes as specified in the TS section.

• A new Condition C has been added with a Note indicating this Condition is only applicable to penetration flow paths with two [or more] containment isolation valves. Condition C is entered if two or more penetration flow paths with one containment isolation valve inoperable [for reasons other than Condition[s] E [and F]]. The Bases describes the Required Action C.1 Completion Time to isolate all but one of the affected containment isolation valves within 4 hours.

• The bases discussion for Required Action D.1 has been updated to account for new Conditions B and C and have been added where applicable.

• Condition B and Required Action B.1 has been re-numbered to Condition D and Required Action D.1.

• Condition C and Required Action C.1 and C.2 have been re-numbered to Condition E and Required Action E.1 and E.2.

• Reference to BAW–2461–A has been added as Reference 6. Previous references 6, 7, and 8 have been re-numbered to references 7, 8 and 9. Applicable changes have been made throughout the Bases.

• Condition D and Required Action D.1, D.2 and D.3 have been re-numbered to Condition F and Required Action F.1, F.2 and F.3.

• Condition E and Required Action E.1 and E.2 have been re-numbered to Condition G and Required Action G.1 and G.2.

3.0 Technical Evaluation

As stated previously, BAW–2461–A describes a method to revise the Completion Time for specific Conditions per Technical Specification 3.6.3, Containment Isolation Valves. The NRC approved BAW–2461 on August 29, 2007, for referencing in license applications to the extent specified and under the limitations and conditions stated in the topical report and Section 4.1 of the staff's safety evaluation (Reference 6). TSTF–498 is proposing changes to the B&W STS, NUREG 1430, which are in accordance with Topical Report BAW–2461–A and subject to the Limitations, Conditions and Regulatory Commitments specified in the staff Safety Evaluation. Any differences between TR BAW–2461–A Technical Specification examples and TSTF–498 proposed Technical Specifications have been evaluated and determined to be acceptable. BAW–2461–A, Table 2–1, Condition A note states ''Only applicable to penetration flow paths with two [or more] containment isolation valves with the exception of containment isolation valves in the main steam lines [and list of specific penetrations (if any) identified by the plant-specific risk-informed process to have high risk significance for ISLOCA.]'' To be consistent with the ITS format and content rules, the Condition A Note was written as ''Only applicable to penetration flow paths with two [or more] containment isolation valves except containment isolation valves in the main steam lines and [ ].'' The Condition is modified by a Reviewer's Note which states, ''The Condition A Note should list the specific penetrations (if any) identified by the plant-specific risk analysis as having high risk significance for an interfacing systems loss of coolant accident (ISLOCA).'' This change is editorial and does not affect the application of the TS. The change in wording meets the requirements specified in BAW–2461–A and is therefore acceptable.

The July 5, 2006 Request for Additional Information (RAI) response to NRC Question 1 stated that the following action would be added as Required Action A.1 with a 4 hour Completion Time, ''Verify that the redundant CIV on the same penetration is operable [applicable only if the redundant CIV has an operator and/or body type that is not diverse from the inoperable CIV depending on which parts are inoperable.]'' In TSTF–498, Required Action A.1 has a 4 hour Completion Time and states, ''Determine the OPERABLE containment isolation valve in the affected penetration is not inoperable due to common cause failure.'' The wording was chosen to be consistent with LCO 3.8.1, Required Action B.3.1, regarding inoperable diesel generators. The discussion of what is required to be evaluated, ''applicable only if the redundant CIV has an operator and/or body type that is not diverse from the inoperable CIV depending on which parts are inoperable,'' is placed in the Required Action A.1 Bases. Placing the detailed description of what is meant by common cause failure in the Bases is consistent with the ITS format and content rules. This change has been evaluated as a Revision to BAW–2461–A. TSTF–498 wording is equivalent to the proposed wording submitted as RAI response #1 and is consistent with NRC's Safety Evaluation for BAW–2461–A and is therefore acceptable.

B&W STS Required Action A.1 and A.2 are being revised to re-number these actions to A.2 and A.3. This is necessary to incorporate the new Required Action A.1 as described above. Additionally, the completion time for the new Required Action A.2 which states ''isolate the affected penetration flow path by use of at least one closed and de-activated automatic valve, closed manual valve, blind flange, or check valve with flow through the valve secured'' is being revised from 4 hours to 7 days. This change has been evaluated by the staff and is consistent with NRC's Safety Evaluation for BAW–2461–A and is therefore acceptable.

B&W STS is adding a new Condition B for one or more penetration flow paths with one containment isolation valve inoperable [for reasons other than purge valve leakage not within limit] with a Note specifying ''Only applicable to penetration flow paths with two [or more] containment isolation valves in the main steam lines and [ ]. There is also a Reviewer's Note that states ''The condition B Note should list the specific penetrations (if any) identified by the plant-specific risk analysis as having high risk significance for an interfacing systems loss of coolant accident (ISLOCA). This wording is consistent with the change made to Condition A and is consistent with the format and content rules in ITS. Additionally, the Required Actions and associated Completion Times are consistent with Condition A and the change evaluated by the staff in the NRC's Safety Evaluation for BAW–2461–A. This new Condition was required since main steam line isolation valves were explicitly excluded from the CT extension as stated in the NRC's Safety Evaluation for BAW–2461–A and is therefore acceptable.

B&W STS Condition B and Required Action B.1 are being revised to be Condition D and Required Action D.1. With the addition of new Conditions B and C the remaining Conditions and Required Actions need to be re-numbered. This change is editorial and results in no technical change and is therefore acceptable.

B&W STS is adding a new Condition C which is applicable when two or more penetrations have one inoperable containment isolation valve. This Condition requires isolating all but one of the affected penetrations within 4 hours (the existing Completion Time for Condition A). Once this Completion Time is satisfied and since Condition A is still applicable then this essentially limits the 7 day Completion Time in Condition A to a single penetration. This change addresses Condition and Limitation 6 in the NRC's Safety Evaluation for BAW–2461–A and is therefore acceptable.

B&W STS Condition C and Required Actions C.1 and C.2 are being revised to be Condition E and Required Action E.1 and E.2. With the addition of new Conditions B and C the remaining Conditions and Required Actions need to be re-numbered. This change is editorial and results in no technical change and is therefore acceptable.

B&W STS Condition D and Required Action D.1, D.2 and D.3 are being revised to be Condition F and Required Action F.1, F.2 and F.3. With the addition of new Conditions B and C the remaining Conditions and Required Actions need to be re-numbered. This change is editorial and results in no technical change and is therefore acceptable.

B&W STS Condition E and Required Action E.1 and E.2 are being revised to be Condition G and Required Action G.1 and G.2. With the addition of new Conditions B and C the remaining Conditions and Required Actions need to be re-numbered. This change is editorial and results in no technical change and is therefore acceptable.

B&W STS Bases for B 3.6.3 Actions A.1, A.2 and A.3 are being revised to describe the Note that is being added indicating the Condition is only applicable to those penetration flow paths with two [or more] containment isolation valves and that the isolation valves in the main steam line are not applicable along with any specific penetrations identified by the plant-specific risk analysis. This is necessary to ensure the correct Required Actions are taken based on the applicable penetration. This is consistent with all other Bases descriptions in the B&W STS and is therefore acceptable.

B&W STS Bases for B 3.6.3 Required Action A.2 Completion Time is being revised from 4 hours to 7 days and indicates that this is based on an analysis of plant risk. The change is revising wording associated with the 4 hour completion time to a 7 day completion time. The 7 day completion time is now based upon a plant risk evaluation instead of a reasonable time to isolate the penetration. This is consistent with BAW–2461–A which the staff found acceptable in the Safety Evaluation for BAW–2461–A and is therefore acceptable.

B&W STS Bases for B 3.6.3 is adding support information for new Condition B and Required Actions B.1 and B.2 which is applicable for one or more penetration flow paths with one containment isolation valve inoperable [for reasons other than purge valve leakage not within limit]. Condition B is also only applicable to penetration flow paths with two [or more] containment isolation valves in the main steam lines and [ ]. The associated Required Actions and Completion Times for new Condition B are consistent with Actions and Completion Times for Condition A which the staff found acceptable in the NRC's Safety Evaluation for BAW–2461–A and is therefore acceptable.

B&W STS Bases for B 3.6.3 is adding support information for new Condition C and Required Action C.1 which is applicable for two or more penetration flow paths with one containment isolation valve inoperable [for reasons other than Condition[s] E [and F]]. Condition C is only applicable to penetration flow paths with two [or more] containment isolation valves. The Required Action to isolate all but one of the affected penetration flow paths by use of at least one closed and de-activated automatic valve, closed manual valve, or blind flange within 4 hours ensures that simultaneous LCO entry of an inoperable CIV in separate penetration flow paths such that the proposed 7 day Completion Time in Condition A is limited to no more than one CIV at any given time. This change addresses Limitation and Condition 6 as specified in the NRC's Safety Evaluation for BAW–2461–A and is therefore acceptable.

B&W STS Bases for B 3.6.3 are being revised such that each Condition and Required Action subsequent to the addition of new Conditions B and C need to be re-numbered. Additionally, a new reference has been added (Reference 6) which requires subsequent references to be re-numbered. These changes are considered editorial and do not affect any technical aspect of the Bases and are therefore acceptable.

3.1 Summary

TSTF–498 would provide standardized wording in the B&W STS for plants implementing BAW–2461–A, ''Risk-Informed Justification for Containment Isolation Valve Allowed Outage Time Change.'' The changes to NUREG–1430 proposed by TSTF–498 have been reviewed for consistency with the current NUREG–1430 and BAW–2461–A. The proposed changes have been found to be consistent with NUREG–1430 and BAW–2461–A, therefore the proposed changes are acceptable.

4.0 State Consultation

In accordance with the Commission's regulations, the [ ] State official was notified of the proposed issuance of the amendment. The State official had [(1) no comments or (2) the following comments—with subsequent disposition by the staff].

5.0 Environmental Consideration

The amendments change a requirement with respect to the installation or use of a facility component located within the restricted area as defined in 10 CFR part 20 and change surveillance requirements. [For licensees adding a TS Bases Control Program: The amendment also changes record keeping, reporting, or administrative procedures or requirements.] The NRC staff has determined that the amendments

involve no significant increase in the amounts and no significant change in the types of any effluents that may be released offsite, and that there is no significant increase in individual or cumulative occupational radiation exposure. The Commission has previously issued a proposed finding that the amendments involve no significant hazards considerations, and there has been no public comment on the finding [FR]. Accordingly, the amendments meet the eligibility criteria for categorical exclusion set forth in 10 CFR 51.22(c)(9) [and (c)(10)]. Pursuant to 10 CFR 51.22(b), no environmental impact statement or environmental assessment need be prepared in connection with the issuance of the amendments.

6.0 Conclusion

The Commission has concluded, on the basis of the considerations discussed above, that (1) there is reasonable assurance that the health and safety of the public will not be endangered by operation in the proposed manner, (2) such activities will be conducted in compliance with the Commission's regulations, and (3) the issuance of the amendments will not be inimical to the common defense and security or to the health and safety of the public.

7.0 References

1. Letter from the Technical Specifications Task Force (TSTF), a joint owners group activity, re: TSTF–498, Revision 0, ''Risk-Informed Containment Isolation Valve Completion Times (BAW–2461),'' dated December 20, 2006. (ADAMS ML063560402)
2. Letter from the TSTF re: Response to NRC Request for Additional Information Regarding TSTF–498, Revision 0, ''Risk-Informed Containment Isolation Valve Completion Times (BAW–2461),'' dated October 10, 2007. (ADAMS ML072840444)
3. BAW–2461–A, ''Risk-Informed Justification for Containment Isolation Valve Allowed Outage Time Change,'' Revision 0, dated October 2007. (ADAMS ML072980529)
4. NUREG 1430, ''Standard Technical Specifications Babcock and Wilcox Plants,'' Revision 3.0. (ADAMS ML041830589 and ML041800598)
5. Nuclear Energy Institute 99–04, Revision 0, ''Guidelines for Managing NRC Commitment Changes,'' July 1999.
6. Final Safety Evaluation for Pressurized Water Reactors Owners Group, Topical Report, BAW–2461, Revision 0, ''Risk-Informed Justification for Containment Isolation Valve Allowed Outage Time Change (TAC No. MD5722),'' (ADAMS ML072330227)

The Following Example of an Application Was Prepared by the NRC Staff to Facilitate Use of the Consolidated Line Item Improvement Process (CLIIP). The Model Provides the Expected Level of Detail and Content for An Application to Revise Technical Specifications Regarding Risk-Informed Justification for Containment Isolation Valve Allowed Outage Time Change Using Cliip. Licensees Remain Responsible For Ensuring That Their Actual Application Fulfills Their Administrative Requirements As Well as Nuclear Regulatory Commission Regulations.

U.S. Nuclear Regular Commission, Document Control Desk, Washington, DC 20555.

Subject:

Plant Name
Docket No. 50–
Application for Technical Specification Change Regarding Risk—Informed Justification for Containment Isolation Valve Allowed Outage Time Change Using the Consolidated Line Item Improvement Process

Gentlemen:

In accordance with the provisions of 10 CFR 50.90 [LICENSEE] is submitting a request for an amendment to the technical specifications (TS) for [PLANT NAME, UNIT NOS.].

The proposed amendment would modify TS requirements for containment isolation valve (CIV) allowed outage time changes with implementation of BAW–2461–A, ''Risk-Informed Justification for Containment Isolation Valve Allowed Outage Time Change.''

Attachment 1 provides a description of the proposed change, the requested confirmation of applicability, and plant-specific verifications. Attachment 2 provides the existing TS pages marked up to show the proposed change. Attachment 3 provides revised (clean) TS pages. Attachment 4 provides a summary of the regulatory commitments made in this submittal. Attachment 5 provides the proposed TS Bases changes.

[LICENSEE] requests approval of the proposed License Amendment by [DATE], with the amendment being implemented [BY DATE OR WITHIN X DAYS].

In accordance with 10 CFR 50.91, a copy of this application, with attachments, is being provided to the designated [STATE] Official.

I declare under penalty of perjury under the laws of the United States of America that I am authorized by [LICENSEE] to make this request and that the foregoing is true and correct. (Note that request may be notarized in lieu of using this oath or affirmation statement).

If you should have any questions regarding this submittal, please contact [NAME, TELEPHONE NUMBER]

Sincerely,

[Name, Title]

Attachments:

1. Description and Assessment.
2. Proposed Technical Specification Changes.
3. Revised Technical Specification Pages.
4. Regulatory Commitments.
5. Proposed Technical Specification Bases Changes.

cc: NRC Project Manager
NRC Regional Office
NRC Resident Inspector
State Contact

Attachment 1—Description and Assessment

1.0 Description

The proposed amendment would modify TS requirements for containment isolation valve allowed outage times associated with implementation of BAW–2461–A, ''Risk-Informed Justification for Containment Isolation Valve Allowed Outage Time Change.''

The changes are consistent with Nuclear Regulatory Commission (NRC) approved Industry/Technical Specification Task Force (TSTF) STS change TSTF–498, Revision 1. The **Federal Register** notice published on [DATE] announced the availability of this TS improvement through the consolidated line item improvement process (CLIIP).

2.0 Assessment

2.1 Applicability of Published Safety Evaluation

[LICENSEE] has reviewed the safety evaluation dated [DATE] as part of the CLIIP. This review included a review of the NRC staff's evaluation, as well as the supporting information provided to support TSTF–498, Revision 1. [LICENSEE] has concluded that the justifications presented in the TSTF proposal and the safety evaluation prepared by the NRC staff are applicable to [PLANT, UNIT NOS.] and justify this amendment for the incorporation of the changes to the [PLANT] TS.

2.2 Optional Changes and Variations

[LICENSEE] is not proposing any variations or deviations from the TS changes described in TSTF–498, Revision 1, and the NRC staff's model safety evaluation dated [DATE].

3.0 Regulatory Analysis

3.1 No Significant Hazards Consideration Determination

[LICENSEE] has reviewed the proposed no significant hazards consideration determination (NSHCD) published in the **Federal Register** as part of the CLIIP. [LICENSEE] has concluded that the proposed NSHCD presented in the **Federal Register** notice is applicable to [PLANT] and has found it acceptable for incorporation into the amendment request which satisfies the requirements of 10 CFR 50.91(a).

3.2 Verification and Commitments

As discussed in the notice of availability published in the **Federal Register** on [DATE] for this TS improvement, [LICENSEE] verifies the applicability of TSTF–498, Revision 1, to [PLANT], and commits to adopting the requirements specified in BAW–2461–A which includes the following Limitations and Conditions specified in Section 4.1, Staff Findings and Conditions and Limitations, of the NRC's Safety Evaluation for BAW–2461 (ML072330227):

1. Based on TR BAW–2461, the CIV methodology, PRA parameters, configurations, and data used to evaluate an extended CIV CT to 168 hours is limited to the following plants.

- Davis-Besse
- Oconee Units 1, 2, and 3
- Crystal River 3

Other licensees of B&W designed PWRs requesting to use the TR methodology must provide the same level of information provided by these demonstration plants to ensure that TR BAW–2461 is applicable to their plant.

2. Because not all penetrations have the same impact on ΔCDF, ΔLERF, ICCDP, or ICLERP, verify the applicability of TR BAW–2461 to the specific plant, including verification that: (a) the CIV configurations for the specific plant match the configurations in TR BAW–2461, and (b) the risk-parameter values used in TR BAW–2461, including the sensitivity studies contained in the RAIs, are representative or bounding for the specific plant. Any additional CIV configurations, CT extensions, or non-bounding risk parameter values not evaluated by TR BAW–2461 should be addressed in the plant-specific analyses. [Note that CIV configurations and extended CTs not specifically evaluated by TR BAW–2461, or non-bounding risk parameter values outside the scope of the TR, will require NRC staff review and licensee development of the specific penetrations and related justifications for the proposed CTs].

3. Each licensee adopting TR BAW–2461 will need to confirm that the plant-specific risk assessment including both internal and external events is within the assumptions of TR BAW–2461 and the acceptance guidelines of RG 1.174 and 1.177. The licensee's application verifies that external event risk, including seismic, fires, floods, and high winds, either through quantitative or qualitative evaluation, is shown to not have an adverse impact on the conclusions of the plant-specific analysis for extending the CIV CTs. Specifically: (1) the risk from external events cannot make the total baseline risk exceed 1E–4/yr CDF, or 1E–5/yr LERF, without justification, (2) the risk from external events (i.e., high winds, floods and other) should be specifically evaluated with respect to the extended CIV CT, and (3) fire risk should be specifically addressed. The evaluation should include fire-induced spurious actuation (including containment performance) with respect to the proposed 168-hour CIV CT.

Additionally, each licensee will need to confirm that the seismic CDF referenced for TR BAW–2461 is bounding for its plant, or incorporate a plant-specific seismic CDF estimate. Furthermore, the seismic initiating event frequency will need to be defined and justified for each licensee implementing TR BAW–2461. See Section 3.4.1.4 of the staff's SE.

4. For licensees adopting TR BAW–2461, confirmation should be provided that the Tier 2 and Tier 3 conclusions of the TR are applicable to the licensee's plant and that plant-specific Tier 2 evaluations including CCF and risk-significant configurations including interfacing-system LOCA have been evaluated and included under Tier 2 and Tier 3 including the CRMP as applicable.

- The proposed 168-hour CIV CT will not be applied to CIVs in penetrations connected to the RCS that have two NC CIVs if there are no other valves between the RCS and the environment (i.e., low pressure piping, or opening) that may be used for backup isolation and cannot be confirmed closed. In that case, the operable CIV will be verified closed within the original 4-hour CT, thus satisfying the TS Required Action. See Section 3.3.4 of the staff's SE. The specific penetrations where this is applicable or where interfacing-system LOCA is shown to be risk-significant (as determined by the plant-specific risk-informed process including plant-specific LOCA analysis) will be identified on a plant-specific basis prior to implementation of the proposed TS change. They will be listed explicitly in the proposed TS revision and the current CT will be retained.
- TR BAW–2461 stated that an interfacing-system LOCA is assumed to lead to core damage and large early release, the effectiveness of mitigation systems besides containment isolation is not considered significant. All failed open penetration flow paths with an RCS connection were assumed to have CDF and LERF contributions in TR BAW–2461. Licensees incorporating TR BAW–2461 will need to confirm the above assumption for their plant specific implementation of BAW–2461.
- The specific penetrations with CCF potential will be identified by the licensee on a plant-specific basis. Upon entry into TS LCO 3.6.3, Condition A, the utility will confirm that the redundant similarly-designed CIV has not been affected by the same failure mode as the inoperable CIV. This verification will be performed before entering into the extended portion of the CT (i.e., within 4 hours). The specific penetrations with CCF potential will be identified on a plant-specific basis and listed in a plant-specific TS document or other administrative source. See Section 3.4.1.2 of the staff's SE.
- No action or maintenance activity is performed that will remove equipment that is functionally redundant to the inoperable CIV, including the redundant CIV(s) on the same penetration and support systems for the redundant CIV. See Section 3.3 of TR BAW–2461.
- No action or maintenance activity is performed that will significantly increase the likelihood of challenge to the CIVs. Challenges to the CIVs include DBAs that result in a release of radioactive material within containment (LOCA, main steam line break, and rod ejection accident). Also included is the removal of equipment from service that may cause a significant increase in the likelihood of core damage while in the proposed CT, which may increase the large early release via the inoperable CIV. See Section 3.4 of TR BAW–2461.
- No action or maintenance activity is performed that will remove equipment that supports success paths credited in the CT risk evaluation. This includes the other series valves, if any, credited in the risk assessment for RCS penetrations that otherwise would be risk-significant (i.e., interfacing-system LOCA). See Section 3.4 of TR BAW–2461.

5. TR BAW–2461 was based on generic-plant characteristics. Each licensee adopting TR BAW–2461 must confirm plant-specific Tier 3 information in their individual submittals. The licensee must discuss conformance to the requirements of the

maintenance rule (10 CFR 50.65(a)(4)), as they relate to the proposed CIV CTs and the guidance contained in NUMARC 93.01, Section 11, as endorsed by RG 1.182, including verification that the licensee's maintenance rule program, with respect to CIVs, includes a LERF/ICLERP assessment (i.e., CRMP). See Section 3.4.3 of the staff's SE.

6. TS LCO 3.6.3, Note 2, allows separate condition entry for each penetration flow path. Therefore, each licensee adopting TR BAW–2461 will address the simultaneous LCO entry of an inoperable CIV in separate penetration flow paths such that the proposed 168-hour CIV CT LCO will be limited to no more than one CIV at any given time. In addition, the licensee must confirm that its Tier 3 CRMP addresses simultaneous inoperable CIV LCOs (i.e., separate condition entry) such that the cumulative CIV risk, including LERF, are maintained consistent with the assumptions and conclusions of TR BAW–2461. See Section 3.4.1.2 of the staff's SE.

7. The licensee shall verify that the plant-specific PRA quality is acceptable with respect to its use for Tier 3 for this application in accordance with the guidelines given in RG 1.174 and as discussed in Section 3.4.1.1 of the staff's SE.

8. With respect to past plant-specific license amendments or additional plant-specific applications for a TS change under NRC review that have not been incorporated into the baseline PRA used to evaluate the proposed change, the cumulative risk must be evaluated on a plant-specific basis consistent with the guidance given in RG 1.174, Section 2.2.6 and 3.3.2, and addressed in a licensee's plant-specific application. See Section 3.4.1.5 of the staff's SE.

9. Closed systems inside and outside containment, which are considered to be containment isolation barriers, must meet the provisions outlined in NUREG–0800, Section 6.2.4, ''Containment Isolation System.'' See Section 2.2 of the staff's SE.

10. With an extended CIV CT, the possibility exists that the CIV unavailability will be impacted. Depending on the penetration risk significance and the frequency and length of time of the CIV CT, the unavailability of the containment isolation function may also be impacted. Therefore, licensee's adopting TR BAW–2461 will need to establish an implementation and monitoring program for CIVs, including performance criteria, on a plant-specific basis. See Sections 3.4.1.2 and 3.4.4 of the staff's SE.

11. The PWROG did not specifically address ΔCDF and ΔLERF in TR BAW–2461 regarding the acceptance guidelines of RG 1.174. The PWROG stated that it is not expecting that on line CIV preventive maintenance will increase with the proposed 168-hour CIV. To address this, licensee's adopting TR BAW–2461 will need to assess, on a plant-specific basis, the ΔCDF and ΔLERF acceptance guidance of RG 1.174 including the expected frequency of entering the proposed CT and the expected mean CT for CIV maintenance. See Section 3.4.1.2 of the staff's SE.

4.0 Environmental Evaluation

[LICENSEE] has reviewed the environmental evaluation included in the model safety evaluation dated [DATE] as part of the CLIIP. [LICENSEE] has concluded that the staff's findings presented in that evaluation are applicable and acceptable to [PLANT] and the evaluation is submitted as an attachment to this application.

Attachment 2—Proposed Technical Specification Changes (Mark-Up)

Attachment 3—Proposed Technical Specification Pages

Attachment 4—List of Regulatory Commitments

The following table identifies those actions committed to by [LICENSEE] in this document. Any other statements in this submittal are provided for information purposes and are not considered to be regulatory commitments. Please direct questions regarding these commitments to [CONTACT NAME].

Regulatory commitments	Due date/event
[LICENSEE] will	[Complete, implemented with amendment OR within X days of implementation of amendment].

Attachment 5—Proposed Changes to Technical Specification Bases Pages Proposed No Significant Hazards Consideration Determination

Description of Amendment Request: [Plant Name] requests adoption of an approved change to the standard technical specifications (STS) for Babcock and Wilcox (B&W) Plants (NUREG–1430) and plant specific technical specifications (TS), to allow modification of containment isolation valve completion times associated with implementation of BAW–2461–A, ''Risk-Informed Justification for Containment Isolation Valve Allowed Outage Time Change,'' dated October 2007. The changes are consistent with NRC approved Industry/Technical Specification Task Force (TSTF) STS Traveler, TSTF–498, Revision 1, ''Risk-Informed Containment Isolation Valve Completion Times (BAW–2461).'' The proposed change extends the Completion Times for containment penetration flow paths with one containment isolation valve inoperable from 4 hours to 7 days for Babcock & Wilcox (B&W) NSSS plants. This change is applicable to containment penetrations with two [or more] containment isolation valves in which one containment isolation valve is inoperable [for reasons other than purge valve leakage not within limit]. The extended Completion Time is not applicable to containment isolation valves in the main steam lines or those identified by plant-specific analysis as having high risk significance for interfacing systems loss of coolant accidents (ISLOCAs) and the existing 4 hour Completion Time applies.

Basis for proposed no significant hazards consideration determination: As required by 10 CFR 50.91(a), an analysis of the issue of no significant hazards consideration is presented below:

Criterion 1—The Proposed Change Does Not Involve a Significant Increase in the Probability or Consequences of an Accident Previously Evaluated

The proposed changes revise the Completion Times for restoring an inoperable containment isolation valve (or isolating the affected penetration) within the scope of Topical Report BAW–2461–A, ''Risk-Informed Justification for Containment Isolation Valve Allowed Outage Time Change.'' The Completion Times are extended from 4 hours to 7 days. Containment isolation valves are not accident initiators in any accident previously evaluated. Consequently, the probability of an accident previously evaluated is not significantly increased. Containment isolation valves control the extent of leakage from the containment following an accident. As such, containment isolation valves are instrumental in controlling the consequences of an accident. However, the consequences of any accident previously evaluated are no different during the proposed extended Completion Times than during the existing Completion Times. As a result, the

consequences of any accident previously evaluated are not significantly increased. Therefore, the proposed changes do not involve a significant increase in the probability or consequences of an accident previously evaluated.

Criterion 2—The Proposed Change Does Not Create the Possibility of a New or Different Kind of Accident From Any Previously Evaluated

The proposed changes revise the Completion Times for restoring an inoperable containment isolation valve (or isolating the affected penetration) within the scope of Topical Report BAW–2461–A, ''Risk-Informed Justification for Containment Isolation Valve Allowed Outage Time Change.'' The proposed changes do not change the design, configuration, or method of operation of the plant. The proposed changes do not involve a physical alteration of the plant (no new or different kind of equipment will be installed). Therefore, the proposed changes do not create the possibility of a new or different kind of accident from any accident previously evaluated.

Criterion 3—The Proposed Change Does Not Involve a Significant Reduction in the Margin of Safety

The proposed changes revise the Completion Times for restoring an inoperable containment isolation valve (or isolating the affected penetration) within the scope of Topical Report BAW–2461–A, ''Risk-Informed Justification for Containment Isolation Valve Allowed Outage Time Change.'' In order to evaluate the proposed Completion Time extensions, a probabilistic risk evaluation was performed as documented in Topical Report BAW–2461–A. The risk evaluation concluded that the proposed increase in the Completion Times does not result in an unacceptable incremental conditional core damage probability or incremental conditional large early release probability according to the guidelines of Regulatory Guide 1.177. Therefore, the proposed changes do not involve a significant reduction in a margin of safety.

Based upon the reasoning presented above and the previous discussion of the amendment request, the requested change does not involve a significant hazards consideration as set forth in 10 CFR 50.92(c).

Dated at Rockville, Maryland, this 28th day of January, 2008.

For the Nuclear Regulatory Commission.

Gerald Waig,

Acting Chief, Technical Specifications Branch, Division of Inspection & Regional Support, Office of Nuclear Reactor Regulation.

[FR Doc. E8–1943 Filed 2–1–08; 8:45 am]

BILLING CODE 7590–01–P

SECURITIES AND EXCHANGE COMMISSION

[Release No. 34–57225; File No. SR–FINRA–2007–042]

Self-Regulatory Organizations; Financial Industry Regulatory Authority, Inc.; Notice of Filing and Immediate Effectiveness of Proposed Rule Change Relating to Amendments to the Codes of Arbitration Procedure To Remove the Page Limit on Statements of Claim Filed Through the Online Arbitration Claim Filing System

January 29, 2008.

Pursuant to section 19(b)(1) of the Securities Exchange Act of 1934 (''Act'') [1] and Rule 19b–4 thereunder,[2] notice is hereby given that on December 27, 2007, Financial Industry Regulatory Authority, Inc. (''FINRA'') (f/k/a National Association of Securities Dealers, Inc. (''NASD'')) filed with the Securities and Exchange Commission (''Commission'') the proposed rule change as described in Items I, II, and III below, which Items have been substantially prepared by FINRA. FINRA has designated the proposed rule change as concerned solely with the administration of the self-regulatory organization under section 19(b)(3)(A)(iii) of the Act [3] and Rule 19b–4(f)(3) thereunder,[4] which renders the proposal effective upon receipt of this filing by the Commission. The Commission is publishing this notice to solicit comments on the proposed rule change from interested persons.

I. Self-Regulatory Organization's Statement of the Terms of Substance of the Proposed Rule Change

FINRA is proposing to amend Rule 12302 of the Code of Arbitration Procedure for Customer Disputes (''Customer Code'') and Rule 13302 of the Code of Arbitration Procedure for Industry Disputes (''Industry Code'') to remove the 50-page limit on Statements of Claim filed through the Online Arbitration Claim Filing System (''the System''), to allow parties to submit exhibits to Statements of Claim through the System, and to reflect the new FINRA name.[5] Below is the text of the proposed rule change. Proposed new language is in italics; proposed deletions are in brackets.

* * * * *

[1] 15 U.S.C. 78s(b)(1).

[2] 17 CFR 240.19b–4.

[3] 15 U.S.C. 78s(b)(3)(A)(iii).

[4] 17 CFR 240.19b–4(f)(3).

[5] Specifically, FINRA is updating its Internet address and the title of the Tracking Form generated by the System.

12302. Filing an Initial Statement of Claim

(a) Filing Claim with the Director

(1) To initiate an arbitration, a claimant must file the following with the Director:

- Signed and dated Uniform Submission Agreement; and
- A statement of claim specifying the relevant facts and remedies requested.

The claimant may include any additional documents supporting the statement of claim.

(2) A claimant may use the online claim notification and filing procedure to complete part of the arbitration claim filing process through the Internet. To commence this process, a claimant may complete a Claim Information Form that can be accessed through [*http://www.nasd.com*] *http://www.finra.org.* In completing the Claim Information Form, the claimant may attach an electronic version of the statement of claim, *and any additional documents supporting the statement of claim,* to the form[, provided it does not exceed 50 pages]. Once this online form has been completed, [an NASD] *a FINRA* Dispute Resolution Tracking Form will be generated and displayed for the claimant to reproduce as necessary. The claimant shall then file with the Director the rest of the materials required in subparagraph (1) of the rule, along with a hard copy of the [NASD] *FINRA* Dispute Resolution Tracking Form.

(b)–(d) No change.

13302. Filing an Initial Statement of Claim

(a) Filing Claim with the Director

(1) To initiate an arbitration, a claimant must file the following with the Director:

- Signed and dated Uniform Submission Agreement; and
- A statement of claim specifying the relevant facts and remedies requested.

The claimant may include any additional documents supporting the statement of claim.

(2) A claimant may use the online claim notification and filing procedure to complete part of the arbitration claim filing process through the Internet. To commence this process, a claimant may complete a Claim Information Form that can be accessed through [*http://www.nasd.com*] *http://www.finra.org.* In completing the Claim Information Form, the claimant may attach an electronic version of the statement of claim, *and any additional documents supporting the statement of claim,* to the form[, provided it does not exceed 50 pages]. Once this online form has been

completed, [an NASD] *a FINRA* Dispute Resolution Tracking Form will be generated and displayed for the claimant to reproduce as necessary. The claimant shall then file with the Director the rest of the materials required in subparagraph (1) of the rule, along with a hard copy of the [NASD] *FINRA* Dispute Resolution Tracking Form.

(b)–(d) No change.

* * * * *

II. Self-Regulatory Organization's Statement of the Purpose of, and Statutory Basis for, the Proposed Rule Change

In its filing with the Commission, FINRA included statements concerning the purpose of and basis for the proposed rule change and discussed any comments it received on the proposed rule change. The text of these statements may be examined at the places specified in Item IV below. FINRA has prepared summaries, set forth in sections A, B, and C below, of the most significant aspects of such statements.

A. Self-Regulatory Organization's Statement of the Purpose of, and Statutory Basis for, the Proposed Rule Change

1. Purpose

FINRA is amending its Customer Code and Industry Code to remove the 50-page limit on Statements of Claim filed through the System, to allow parties to submit exhibits to Statements of Claim through the System, and to reflect the new FINRA name. The proposed rule change is intended to encourage more claimants to use online filing. The System will not have any limitation on the number of pages submitted so long as they are submitted as a single document.

To begin an arbitration, a claimant submits a signed and dated Uniform Submission Agreement, a Statement of Claim specifying the relevant facts and remedies requested, any exhibits supporting the Statement of Claim, and the required fees. When a claim is filed in hard copy, the claimant is required to submit sufficient copies of the Statement of Claim for the forum, each arbitrator and each other party.

Since August 2004, FINRA has allowed claimants to file an electronic version of the Statement of Claim so long as the submission does not exceed 50 pages. The Statement of Claim may include exhibits if they are part of the same document and the total number of pages is no more than 50. Claimants who file online also complete an online Claim Information Form containing details about the names and addresses of the parties and their counsel, the issues in controversy, and so forth. Once the Claim Information Form is completed, a Dispute Resolution Tracking Form is generated by the System. Claimants then mail in a signed and dated Uniform Submission Agreement, a copy of the Dispute Resolution Tracking Form, the required fees, and any exhibits. The case is deemed to be filed when all such materials are received.

With electronically filed claims, FINRA staff prints the required copies for the arbitrators and the other parties. The 50-page limit was originally imposed to ensure that FINRA had sufficient resources to process electronic claims efficiently. Having gained experience with electronic filing, FINRA is prepared to process efficiently the additional volume associated with longer Statements of Claim and exhibits.

2. Statutory Basis

FINRA believes that the proposed rule change is consistent with the provisions of section 15A(b)(6) of the Act,[6] which requires, among other things, that FINRA rules must be designed to prevent fraudulent and manipulative acts and practices, to promote just and equitable principles of trade, and, in general, to protect investors and the public interest. By removing the page limitation on submissions through the System, the proposed rule change will provide investors, and other claimants, with expanded access to the System and will make claim processing more efficient.

B. Self-Regulatory Organization's Statement on Burden on Competition

FINRA does not believe that the proposed rule change will result in any burden on competition that is not necessary or appropriate in furtherance of the purposes of the Act.

C. Self-Regulatory Organization's Statement on Comments on the Proposed Rule Change Received From Members, Participants, or Others

Written comments were neither solicited nor received.

III. Date of Effectiveness of the Proposed Rule Change and Timing for Commission Action

The foregoing rule change has become effective pursuant to section 19(b)(3)(A) of the Act[7] and paragraph (f)(3) of Rule 19b–4 thereunder[8] because it is concerned solely with the administration of FINRA.[9] At any time within 60 days of the filing of the proposed rule change, the Commission may summarily abrogate such rule change if it appears to the Commission that such action is necessary or appropriate in the public interest, for the protection of investors, or otherwise in furtherance of the purposes of the Act.

IV. Solicitation of Comments

Interested persons are invited to submit written data, views and arguments concerning the foregoing, including whether the proposed rule change is consistent with the Act. Comments may be submitted by any of the following methods:

Electronic Comments

- Use the Commission's Internet comment form (*http://www.sec.gov/rules/sro.shtml*); or
- Send an e-mail to *rule-comments@sec.gov.* Please include File Number SR–FINRA–2007–042 on the subject line.

Paper Comments

- Send paper comments in triplicate to Nancy M. Morris, Secretary, Securities and Exchange Commission, 100 F Street, NE., Washington, DC 20549–1090.

All submissions should refer to File Number SR–FINRA–2007–042. This file number should be included on the subject line if e-mail is used. To help the Commission process and review your comments more efficiently, please use only one method. The Commission will post all comments on the Commission's Internet Web site (*http://www.sec.gov/rules/sro.shtml*). Copies of the submission, all subsequent amendments, all written statements with respect to the proposed rule change that are filed with the Commission, and all written communications relating to the proposed rule change between the Commission and any person, other than those that may be withheld from the public in accordance with the provisions of 5 U.S.C. 552, will be available for inspection and copying in the Commission's Public Reference Room, 100 F Street, NE., Washington,

[6] 15 U.S.C. 78o–3(b)(6).

[7] 15 U.S.C. 78s(b)(3)(A).

[8] 17 CFR 240.19b–4(f)(3).

[9] The applicability of Rule 19b–4(f)(3) is limited to matters concerned solely with the administration of a self-regulatory organization. Because this narrowly tailored rule change is limited to relaxing administrative restrictions on the length of documents solely for claims processed online and updating FINRA's name and Internet address for purposes of these claims, it meets the Rule 19b–4(f)(3) standard.

DC 20549, on official business days between the hours of 10 a.m. and 3 p.m. Copies of such filing also will be available for inspection and copying at the principal office of FINRA. All comments received will be posted without change; the Commission does not edit personal identifying information from submissions. You should submit only information that you wish to make available publicly. All submissions should refer to File Number SR–FINRA–2007–042 and should be submitted on or before February 25, 2008.

For the Commission, by the Division of Trading and Markets, pursuant to delegated authority.[10]

Florence E. Harmon,

Deputy Secretary.

[FR Doc. E8–1960 Filed 2–1–08; 8:45 am]

BILLING CODE 8011–01–P

SECURITIES AND EXCHANGE COMMISSION

[Release No. 34–57216; File No. SR–NYSE–2008–06]

Self-Regulatory Organizations; New York Stock Exchange LLC; Notice of Filing and Immediate Effectiveness of Proposed Rule Change To Implement Transaction Fees for NYSE MatchPoint

January 28, 2008.

Pursuant to section 19(b)(1) of the Securities Exchange Act of 1934 (the ''Act''),[1] and Rule 19b–4 thereunder,[2] notice is hereby given that on January 22, 2008, the New York Stock Exchange LLC (''NYSE'' or ''Exchange'') filed with the Securities and Exchange Commission (''Commission'') the proposed rule change as described in Items I, II, and III below, which Items have been prepared by the NYSE. The NYSE has designated this proposal as one establishing or changing a due, fee, or other charge imposed by the NYSE under section 19(b)(3)(A)(ii) of the Act,[3] and Rule 19b–4(f)(2) thereunder,[4] which renders the proposal effective upon filing with the Commission. The Commission is publishing this notice to solicit comments on the proposed rule change from interested persons.

I. Self-Regulatory Organization's Statement of the Terms of Substance of the Proposed Rule Change

NYSE proposes to implement an equity transaction fee effective January 22, 2008, for shares executed on the new NYSE MatchPoint℠ (''NYSE MatchPoint'' or ''MatchPoint'')[5] system. The Exchange will charge each Member Organization $.0015 per share executed on the MatchPoint system, with the exception of MatchPoint executions that are effectuated through an optional ''internal match'' process. The text of the proposed rule change is available at the Exchange, the Commission's Public Reference Room, and *http://www.nyse.com.*

II. Self-Regulatory Organization's Statement of the Purpose of, and Statutory Basis for, the Proposed Rule Change

In its filing with the Commission, the NYSE included statements concerning the purpose of, and basis for, the proposed rule change and discussed any comments it received on the proposed rule change. The text of these statements may be examined at the places specified in Item IV below. The NYSE has prepared summaries, set forth in sections A, B, and C below, of the most significant aspects of such statements.

A. Self-Regulatory Organization's Statement of the Purpose of, and Statutory Basis for, the Proposed Rule Change

1. Purpose

The Exchange proposes to implement an equity transaction fee for executions on the NYSE MatchPoint system to take effect with the scheduled launch of MatchPoint on January 22, 2008. The MatchPoint system is an electronic facility of the Exchange that matches aggregated orders at predetermined, one-minute sessions throughout regular hours and after hours of the Exchange. The proposed transactional fee of $.0015 per executed share, for single and portfolio orders, will be charged to both the buyer(s) and seller(s) of the executed shares, with the exception of MatchPoint executions that are effectuated through an optional ''internal match'' process.[6] More specifically, when the same user enters different orders into MatchPoint for internal matching purposes under the same mnemonic and for the same matching session, any resulting executions will not be subject to this transaction fee.[7] Only NYSE members, member organizations and sponsoring member organizations will be charged this transaction fee. Transaction fees for executions of orders entered by sponsored participants (who are non-members) will be charged to the sponsoring member organization.

The following examples will demonstrate how the proposed MatchPoint transactional fee will be charged:

Example 1: User A enters a buy order into MatchPoint for 1,000 shares of XYZ security and designates the order for the 11 a.m. matching session. User B enters a sell order into MatchPoint for 1,000 shares of XYZ security and designates the order for the 11 a.m. matching session. During the 11 a.m. matching session, User A's buy order for 1,000 shares of XYZ security and User B's sell order for 1,000 shares of XYZ security match and execute. User A is charged $.0015 per executed share (1,000 shares × $.0015 = $1.50). User B is also charged $.0015 per executed share (1,000 shares × $.0015 = $1.50).

Example 2: User A enters a portfolio order into MatchPoint for a customer to buy 1,000 shares of XYZ security with an internal match constraint under the mnemonic ''Q'' for the 2 p.m. matching session. User A then enters another portfolio order into MatchPoint for a second customer to sell 1,000 shares of XYZ security with an internal match constraint under the same mnemonic (''Q'') for the 2 p.m. matching session. During the 2 p.m. matching session, the above described portfolio orders entered by User A internally match and execute. Thus, User A's customers both receive executions of 1,000 shares of XYZ security, but no transaction fee is charged to A for these internally matched executions.

2. Statutory Basis

The Exchange believes that the proposed rule change is consistent with the provisions of section 6[8] of the Act[9] in general, and section 6(b)(4) of the Act[10] in particular, in that it is designed to provide for the equitable allocation of reasonable dues, fees and other charges among its members and other persons using its facilities. Specifically, the proposed transaction fee is reasonable

[10] 17 CFR 200.30–3(a)(12).

[1] 15 U.S.C. 78s(b)(1).

[2] 17 CFR 240.19b–4.

[3] 15 U.S.C. 78s(b)(3)(A)(ii).

[4] 17 CFR 240.19b–4(f)(2).

[5] *See* Securities Exchange Act Release No. 57058 (December 28, 2007), 73 FR 903 (January 4, 2008) (SR–NYSE–2007–102).

[6] *See* NYSE Rule 1500 (NYSE MatchPoint℠), subparagraph (b)(2)(D): '''NYSE MatchPoint Internal Match Constraint' or 'internal match constraint' shall mean an optional order constraint that limits the execution of portfolios and single orders by directing the portfolio and single orders to first trade with other portfolios or single orders of the same User before trading with other orders in a particular matching session. If, after an internal match occurs and residual orders remain, the residual orders will be available to trade with all other orders. These constraints are only active for a single matching session.''

[7] Because orders are entered by a ''mnemonic'' (*i.e.*, member identifier and/or account identifier) and because mnemonics are categorized as either ''agency'' or ''proprietary,'' agency and proprietary orders cannot be entered under the same mnemonic. Thus, agency and proprietary orders cannot match and execute against each other in an internal match.

[8] 15 U.S.C. 78f.

[9] 15 U.S.C. 78a.

[10] 15 U.S.C. 78f(b)(4).

in light of the costs incurred by the Exchange for the operation of the MatchPoint system. Additionally, the transaction fee is equitable as the fee is applied to all users of the MatchPoint system equally.

B. Self-Regulatory Organization's Statement on Burden on Competition

NYSE does not believe that the proposed rule change will impose any burden on competition that is not necessary or appropriate in furtherance of the purpose of the Act.

C. Self-Regulatory Organization's Statement on Comments on the Proposed Rule Change Received From Members, Participants or Others

Written comments were neither solicited nor received.

III. Date of Effectiveness of the Proposed Rule Change and Timing for Commission Action

The foregoing rule change has become effective pursuant to section 19(b)(3)(A) of the Act [11] and Rule 19b–4(f)(2) [12] thereunder because it establishes a due, fee, or other charge applicable to a member imposed by NYSE. At any time within 60 days of the filing of such proposed rule change, the Commission may summarily abrogate such rule change if it appears to the Commission that such action is necessary or appropriate in the public interest, for the protection of investors, or otherwise in furtherance of the purposes of the Act.

IV. Solicitation of Comments

Interested persons are invited to submit written data, views, and arguments concerning the foregoing, including whether the proposed rule change is consistent with the Act. Comments may be submitted by any of the following methods:

Electronic Comments

- Use the Commission's Internet comment form (*http://www.sec.gov/rules/sro.shtml*); or
- Send an e-mail to *rule-comments@sec.gov.* Please include File Number SR–NYSE–2008–06 on the subject line.

Paper Comments

- Send paper comments in triplicate to Nancy M. Morris, Secretary, Securities and Exchange Commission, 100 F Street, NE., Washington, DC 20549–1090.

All submissions should refer to File Number SR–NYSE–2008–06. This file number should be included on the subject line if e-mail is used. To help the Commission process and review your comments more efficiently, please use only one method. The Commission will post all comments on the Commission's Internet Web site (*http://www.sec.gov/rules/sro.shtml*). Copies of the submission, all subsequent amendments, all written statements with respect to the proposed rule change that are filed with the Commission, and all written communications relating to the proposed rule change between the Commission and any person, other than those that may be withheld from the public in accordance with the provisions of 5 U.S.C. 552, will be available for inspection and copying in the Commission's Public Reference Room, 100 F Street, NE., Washington, DC 20549, on official business days between the hours of 10 a.m. and 3 p.m. Copies of such filing also will be available for inspection and copying at the principal office of the NYSE. All comments received will be posted without change; the Commission does not edit personal identifying information from submissions. You should submit only information that you wish to make available publicly. All submissions should refer to File Number SR–NYSE–2008–06 and should be submitted on or before February 25, 2008.

For the Commission, by the Division of Trading and Markets, pursuant to delegated authority.[13]

Nancy M. Morris,

Secretary.

[FR Doc. E8–1878 Filed 2–1–08; 8:45 am]

BILLING CODE 8011–01–P

[11] 15 U.S.C. 78s(b)(3)(A).

[12] 17 CFR 240.19b–4(f)(2).

[13] 17 CFR 200.30–3(a)(12).

SECURITIES AND EXCHANGE COMMISSION

[Release No. 34–57213; File No. SR–NYSE–2008–07]

Self-Regulatory Organizations; New York Stock Exchange LLC; Notice of Filing and Immediate Effectiveness of Proposed Rule Change Relating to the Extension of Crossing Sessions III and IV Pilots

January 28, 2008.

Pursuant to section 19(b)(1) of the Securities Exchange Act of 1934 (''Act'') [1] and Rule 19b–4 thereunder,[2] notice is hereby given that on January 22, 2008, the New York Stock Exchange LLC (''NYSE'' or ''Exchange'') filed with the Securities and Exchange Commission (''Commission'') the proposed rule change as described in Items I and II below, which Items have been prepared by the Exchange. The Exchange filed the proposed rule change pursuant to section 19(b)(3)(A) of the Act [3] and Rule 19b–4(f)(6) thereunder, which renders it effective upon filing with the Commission.[4] The Commission is publishing this notice to solicit comments on the proposed rule change from interested persons.

I. Self-Regulatory Organization's Statement of the Terms of Substance of the Proposed Rule Change

The NYSE proposes to extend until February 1, 2009 the following pilot programs: Crossing Session III, for the execution of guaranteed price coupled orders by member organizations to fill the balance of customer orders at a price that was guaranteed to a customer prior to the close of the Exchange's 9:30 a.m. to 4 p.m. trading session; and Crossing Session IV, whereby an unfilled balance of an order may be filled at a price such that the entire order is filled at no worse price than the Volume Weighted Average Price (''VWAP'') for the subject security.

The text of the proposed rule change is available on the NYSE's Web site (*http://www.nyse.com*), at the NYSE's Office of Secretary, and at the Commission's Public Reference Room.

II. Self-Regulatory Organization's Statement of the Purpose of, and Statutory Basis for, the Proposed Rule Change

In its filing with the Commission, the NYSE included statements concerning the purpose of, and basis for, the proposed rule change and discussed any comments it received on the proposed rule change. The Exchange has prepared summaries set forth in sections A, B, and C below of the most significant aspects of such statements.

A. Self-Regulatory Organization's Statement of the Purpose of, and Statutory Basis for, the Proposed Rule Change

1. Purpose

In SR–NYSE–2002–40,[5] the Commission approved the establishment of two new crossing sessions (Crossing Sessions III and IV) in the Exchange's Off-Hours Trading

[1] 15 U.S.C. 78s(b)(1).

[2] 17 CFR 240.19b–4.

[3] 15 U.S.C. 78s(b)(3)(A).

[4] 17 CFR 240.19b–4(f)(6).

[5] *See* Securities Exchange Act Release No. 48857 (December 1, 2003), 68 FR 68440 (December 8, 2003) (SR–NYSE–2002–40).

Facility (''OHTF'') as a pilot program (''Pilot''), expiring on December 1, 2004. In SR–NYSE–2005–01,[6] the Commission approved an extension of the Pilot to February 1, 2006. In SR–NYSE–2006–02,[7] the Commission approved an extension of the Pilot to February 1, 2007. In SR–NYSE–2007–07 [8] the Commission approved an extension of the Pilot to February 1, 2008.

This filing seeks to extend the Pilot until February 1, 2009. Crossing Sessions III and IV are described below.

Background

The purpose of the original proposed rule change was to add two additional ''Crossing Sessions'' (Crossing Sessions III and IV) to the Exchange's OHTF. Before the proposed rule change, the OHTF consisted of Crossing Sessions I and II. Crossing Session I permits the execution, at the Exchange's closing price, of single-stock, single-sided closing price orders and crosses of single-stock, and closing price buy and sell orders. Crossing Session II permits the execution of crosses of multiple-stock (''basket'') aggregate-priced buy and sell orders. For Crossing Session II, trade reporting is accomplished by reporting to the Consolidated Tape the total number of shares and the total market value of the aggregate-price trades. There is no indication of the individual component stocks involved in the aggregate-price transactions.

Crossing Session III

The Exchange is proposing to extend until February 1, 2009, the Pilot in Crossing Session III. Crossing Session III is described in Exchange Rule 907. This Pilot would continue to allow for the execution on the NYSE of ''guaranteed price coupled orders'' whereby member organizations could fill the unfilled balance of a customer order at a price which was guaranteed to the customer prior to the close of the Exchange's 9:30 a.m. to 4 p.m. trading session.

Member firms, in serving their institutional customers, may offer them a guarantee that a large size order will receive no worse than a particular price. Such a practice is usually referred to as an ''upstairs stop,'' meaning that the firm guarantees that its customer's order will be executed at no worse price than the agreed-upon, guaranteed price, with the member firm trading for its own account, if necessary, to effectuate the guarantee.

Typically, a member firm will seek to execute as much of the order as possible during the trading day at or below the ''stop'' price (in the case of a buy order) or at or above the ''stop'' price (in the case of a sell order). Any portion of the order not filled during the trading day will be completed after hours, with the firm either buying from, or selling to, its customer at a price which ensures that the entire order is executed at a price which is no worse than the ''stop'' price.

Member firms typically execute the unfilled balance of the order, after the U.S. Consolidated Tape is closed, in the London over-the-counter market, where trades are not reported in real time. The purpose of this is simply to minimize the possibility that other market participants may ascertain the firm's, or the customer's inventory position, and possibly trade in the subject security to the detriment of the firm that granted the ''upstairs stop.'' The Exchange believes that it is more transparent to print the trade in the NYSE primary market during U.S. Consolidated Tape hours.

Crossing Session IV

The Exchange is also proposing to extend the Pilot in Crossing Session IV (which is also described in Exchange Rule 907), until February 1, 2009. Crossing Session IV is a facility whereby member organizations may fill the unfilled balance of a customer's order at a price such that the overall order is filled at a price that is no worse than the VWAP (the volume weighted average price) for the subject security on that trading day. The member organization would be required to document its VWAP agreement with the customer and the basis upon which the VWAP price would be determined.

Operation of Crossing Sessions

As described in NYSE Information Memos 04–30 and 05–57 and Rule 907, Crossing Sessions III and IV would continue to operate as follows:

(i) The original order as to which an ''upstairs stop'' or ''VWAP'' has been granted may be of any size;

(ii) The customer must have received a ''stop'' (guaranteed price) or VWAP for the entire order;

(iii) The member firm must record all details of the order, including the price it has guaranteed its customer or that the entire order will be filled at no worse than the VWAP;

(iv) An order or the unfilled balance of an order that would be executed in Crossing Session III or Crossing Session IV may be of any size;

(v) The customer's order must be executed in Crossing Session III or Crossing Session IV at a price that ensures that the entire order is executed at a price that is no worse than the guaranteed price or the VWAP;

(vi) Orders may be entered in Crossing Session III or Crossing Session IV between 4 p.m. and 6:30 p.m., and must be identified as either a Crossing Session III or Crossing Session IV order;

(vii) Member firms will receive an immediate report of execution upon entering an order into Crossing Session III or Crossing Session IV;

(viii) Orders may be entered into Crossing Session III for execution at prices outside the trading range in the subject security during the 9:30 a.m. to 4 p.m. trading session;

(ix) Orders may not be entered into Crossing Session III or Crossing Session IV in a security that is subject to a trading halt at the close of the regular 9:30 a.m. to 4 p.m. trading session; and

(x) At 6:30 p.m., the Exchange will print trades reported through Crossing Session III as guaranteed price coupled orders or in Crossing Session IV as VWAP executions.

2. Statutory Basis

NYSE believes that the proposed rule change is consistent with section 6 of the Act [9] in general, and furthers the objectives of section 6(b)(5) of the Act [10] in particular, in that it is designed to promote just and equitable principles of trade, to remove impediments to and perfect the mechanism of a free and open market and a national market system and, in general, to protect investors and the public interest.

B. Self Regulatory Organization's Statement on Burden on Competition

The Exchange does not believe that the proposed rule change will impose any burden on competition that is not necessary or appropriate in furtherance of the purposes of the Act.

C. Self-Regulatory Organization's Statement on Comments on the Proposed Rule Change Received From Members, Participants or Others

The Exchange has neither solicited nor received written comments on the proposed rule change.

III. Date of Effectiveness of the Proposed Rule Change and Timing for Commission Action

The Exchange has filed the proposed rule change pursuant to section

[6] *See* Securities Exchange Act Release No. 51091 (January 28, 2005), 70 FR 6484 (February 7, 2005) (SR–NYSE–2005–01).

[7] *See* Securities Exchange Act Release No. 53275 (February 13, 2006), 71 FR 8626 (February 17, 2006) (SR–NYSE–2006–02).

[8] *See* Securities Exchange Act Release No. 55281 (February 12, 2007), 72 FR 7804 (February 20, 2007) (SR–NYSE–2007–07).

[9] 15 U.S.C. 78f(b).

[10] 15 U.S.C. 78f(b)(5).

19(b)(3)(A)(iii) of the Act [11] and Rule 19b–4(f)(6) thereunder.[12] Because the proposed rule change does not: (i) Significantly affect the protection of investors or the public interest; (ii) impose any significant burden on competition; and (iii) become operative prior to 30 days from the date on which it was filed, or such shorter time as the Commission may designate, if consistent with the protection of investors and the public interest, the proposed rule change has become effective pursuant to section 19(b)(3)(A) of the Act and Rule 19b–4(f)(6)(iii) thereunder.[13]

A proposed rule change filed under Rule 19b–4(f)(6) normally does not become operative prior to 30 days after the date of the filing. However, pursuant to Rule 19b–4(f)(6)(iii),[14] the Commission may designate a shorter time if such action is consistent with the protection of investors and the public interest. NYSE has asked the Commission to waive the 30-day operative delay so that the proposal may become operative immediately upon filing. The Exchange believes the waiver of this period will allow it to continue the Pilots without undue delay, which it believes is in the public interest as it will avoid inconvenience and interruption to the public. The Commission believes such waiver is consistent with the protection of investors and the public interest because it presents no new issues and would allow the Pilots to operate without interruption. For this reason, the Commission designates the proposal to be operative upon filing with the Commission.[15]

At any time within 60 days of the filing of the proposed rule change, the Commission may summarily abrogate such rule change if it appears to the Commission that such action is necessary or appropriate in the public interest, for the protection of investors, or otherwise in furtherance of the purposes of the Act.

[11] 15 U.S.C. 78s(b)(3)(A)(iii).

[12] 17 CFR 240.19b–4(f)(6).

[13] Rule 19b–4(f)(6) also requires the Exchange to give the Commission written notice of its intent to file the proposed rule change along with a brief description and text of the proposed rule change, at least five business days prior to the date of filing of the proposed rule change, or such shorter time as designated by the Commission. The Exchange has satisfied the pre-filing requirement.

[14] 17 CFR 240.19b–4(f)(6)(iii).

[15] For purposes only of waiving the 30-day pre-operative period, the Commission has considered the proposed rule's impact on efficiency, competition and capital formation. 15 U.S.C. 78c(f).

IV. Solicitation of Comments

Interested persons are invited to submit written data, views and arguments concerning the foregoing, including whether the proposed rule change is consistent with the Act. Comments may be submitted by any of the following methods:

Electronic Comments

- Use the Commission's Internet comment form (*http://www.sec.gov/rules/sro.shtml*); or
- Send e-mail to *rule-comments@sec.gov.* Please include File Number SR–NYSE–2008–07 on the subject line.

Paper Comments

- Send paper comments in triplicate to Nancy M. Morris, Secretary, Securities and Exchange Commission, 100 F Street, NE., Washington, DC 20549–1090.

All submissions should refer to File Number SR–NYSE–2008–07. This file number should be included on the subject line if e-mail is used. To help the Commission process and review your comments more efficiently, please use only one method. The Commission will post all comments on the Commission's Internet Web site (*http://www.sec.gov/rules/sro/shtml*). Copies of the submission, all subsequent amendments, all written statements with respect to the proposed rule change that are filed with the Commission, and all written communications relating to the proposed rule change between the Commission and any person, other than those that may be withheld from the public in accordance with the provisions of 5 U.S.C. 552, will be available for inspection and copying in the Commission's Public Reference Room, 100 F Street, NE., Washington, DC 20549, on official business days between the hours of 10 a.m. and 3 p.m. Copies of such filing will also be available for inspection and copying at the principal office of the NYSE. All comments received will be posted without change; the Commission does not edit personal identifying information from submissions. You should submit only information that you wish to make available publicly. All submissions should refer to File number SR–NYSE–2008–07 and should be submitted on or before February 25, 2008.

For the Commission, by the Division of Trading and Markets, pursuant to delegated authority.[16]

Nancy M. Morris,

Secretary.

[FR Doc. E8–1879 Filed 2–1–08; 8:45 am]

BILLING CODE 8011–01–P

SECURITIES AND EXCHANGE COMMISSION

[Release No. 34–57219; File No. SR–NYSEArca–2008–13]

Self-Regulatory Organizations; NYSE Arca, Inc.; Notice of Filing and Immediate Effectiveness of a Proposed Rule Change Relating To Listing Standards for Index-Linked Exchangeable Notes in NYSE Arca Equities Rule 5.2(j)(4)

January 29, 2008.

Pursuant to section 19(b)(1) of the Securities Exchange Act of 1934 (''Act'') [1] and Rule 19b–4 thereunder,[2] notice is hereby given that on January 22, 2008, NYSE Arca, Inc. (''NYSE Arca'' or ''Exchange''), through its wholly-owned subsidiary NYSE Arca Equities, Inc. (''NYSE Arca Equities''), filed with the Securities and Exchange Commission (''Commission'') the proposed rule change as described in Items I, II, and III below, which Items have been substantially prepared by the Exchange. The Exchange filed the proposal pursuant to section 19(b)(3)(A) of the Act [3] and Rule 19b–4(f)(6) thereunder,[4] which renders the proposal effective upon filing with the Commission. The Commission is publishing this notice to solicit comments on the proposed rule change from interested persons.

I. Self-Regulatory Organization's Statement of the Terms of Substance of the Proposed Rule Change

The Exchange proposes to amend its rules governing NYSE Arca, LLC (also referred to as the ''NYSE Arca Marketplace''), which is the equities trading facility of NYSE Arca Equities. More specifically, the Exchange proposes to amend NYSE Arca Equities Rule 5.2(j)(4), the Exchange's initial listing standards for ''Index-Linked Exchangeable Notes.'' The text of the proposed rule change is available at the Exchange, the Commission's Public Reference Room, and *http://www.nyse.com.*

[16] 17 CFR 200.30–3(a)(12).

[1] 15 U.S.C. 78s(b)(1).

[2] 17 CFR 240.19b–4.

[3] 15 U.S.C. 78s(b)(3)(A).

[4] 17 CFR 240.19b–4(f)(6).

II. Self-Regulatory Organization's Statement of the Purpose of, and Statutory Basis for, the Proposed Rule Change

In its filing with the Commission, the Exchange included statements concerning the purpose of, and basis for, the proposed rule change, and discussed any comments it received on the proposed rule change. The text of these statements may be examined at the places specified in Item IV below. The Exchange has prepared summaries, set forth in sections A, B, and C below, of the most significant aspects of such statements.

A. Self-Regulatory Organization's Statement of the Purpose of, and Statutory Basis for, the Proposed Rule Change

1. Purpose

The Exchange is proposing to amend NYSE Arca Equities Rule 5.2(j)(4), the Exchange's initial listing standards for ''Index-Linked Exchangeable Notes,'' to provide for greater flexibility in the listing criteria for such securities, as set forth below. The proposed substantive rule changes herein are based upon the rules of the American Stock Exchange LLC (''Amex'').[5] The Commission has approved similar proposed rule changes by the Exchange recently.[6]

Currently, NYSE Arca Equities Rule 5.2(j)(4)(a) provides that an issue of Index-Linked Exchangeable Notes must have a minimum public distribution of 150,000 notes with a minimum of 400 public note-holders, except, if traded in thousand dollar denominations, then no minimum number of holders. The Exchange proposes to expand the exception to provide that, if the notes are traded in thousand dollar denominations, then there is also no minimum public distribution requirement.[7] The Exchange notes that, without the exception to the 150,000 publicly distributed notes requirement, the Exchange would be unable to list issues in thousand dollar denominations having a market value of less than $150 million. The Exchange believes that the proposed exception is a reasonable accommodation for those issuances in $1,000 denominations.

The Exchange proposes to further amend NYSE Arca Equities Rule 5.2(j)(4)(a) to provide that there are no minimum public distribution and holders requirements if the notes are redeemable at the option of the holders thereof on at least a weekly basis (regardless of whether the notes are traded in thousand dollar denominations).[8] The Exchange believes that a weekly redemption right will ensure a strong correlation between the market price of the notes and the performance of the underlying index, as holders will be unlikely to sell their notes for less than their redemption value if they have a weekly right to redeem such notes for their full value. In addition, in the case of certain notes with a weekly redemption feature, the issuer may have the ability to issue new notes from time to time at market prices prevailing at the time of sale, at prices related to market prices, or at negotiated prices. This provides a ready supply of new notes, thereby lessening the possibility that the market price of such notes will be affected by a scarcity of available notes for sale. The Exchange believes that the weekly redemption right also assists in maintaining a strong correlation between the market price and the indicative value of the notes, as investors will be unlikely to pay more than the indicative value in the open market if they can acquire notes from the issuer at that price.

The Exchange believes that the ability to list Index-Linked Exchangeable Notes with these characteristics without any minimum public distribution or holders requirements is important to the successful listing of such notes. Issuers issuing these types of notes generally do not intend to do so by way of an underwritten offering. Rather, the distribution arrangement is analogous to that of an exchange-traded fund issuance, in that the issue is launched without any significant distribution event and the float increases over time as investors purchase additional securities from the issuer at the then indicative value. Investors will generally seek to purchase the notes at a point when the underlying index is at a level that they perceive as providing an attractive growth opportunity. In the context of such a distribution arrangement, it is difficult for an issuer to guarantee its ability to sell a specific number of units on the listing date. However, the Exchange believes that this difficulty in ensuring the sale of 150,000 notes or 400 public holders on the listing date is not indicative of a likely long-term lack of liquidity in the notes or, for the reasons set forth in the prior paragraph, of a difficulty in establishing a pricing equilibrium in the notes or a successful two-sided market.

2. Statutory Basis

The Exchange believes that its proposal is consistent with section 6(b) of the Act[9] in general, and furthers the objectives of section 6(b)(5) of the Act[10] in particular, in that it is designed to promote just and equitable principles of trade, to remove impediments to and perfect the mechanism of a free and open market and a national market system, and, in general, to protect investors and the public interest.

B. Self-Regulatory Organization's Statement on Burden on Competition

The Exchange does not believe that the proposed rule change will impose any burden on competition that is not necessary or appropriate in furtherance of the purposes of the Act.

C. Self-Regulatory Organization's Statement on Comments on the Proposed Rule Change Received From Members, Participants, or Others

The Exchange has neither solicited nor received written comments on the proposed rule change.

III. Date of Effectiveness of the Proposed Rule Change and Timing for Commission Action

Because the foregoing proposed rule change does not: (1) Significantly affect the protection of investors or the public interest; (2) impose any significant burden on competition; and (3) become operative for 30 days from the date on which it was filed, or such shorter time as the Commission may designate if consistent with the protection of investors and the public interest, it has become effective pursuant to Section 19(b)(3)(A) of the Act[11] and Rule 19b–4(f)(6) thereunder.[12]

[5] *See* Securities Exchange Act Release Nos. 55733 (May 10, 2007), 72 FR 27602 (May 16, 2007) (SR–Amex–2007–34) (the ''May 2007 Amex Order''); and 56629 (October 9, 2007), 72 FR 58689 (October 16, 2007) (SR–Amex–2007–87) (the ''October 2007 Amex Order''). These two orders approved changes to Section 107A of the Amex Company Guide.

[6] *See* Securities Exchange Act Release Nos. 56924 (December 7, 2007), 72 FR 70918 (December 13, 2007) (SR–NYSEArca–2007–98) (amending NYSE Arca Equities Rule 5.2(j)(2) (''Equity-Linked Notes'')); 56906 (December 5, 2007), 72 FR 70636 (December 12, 2007) (SR–NYSEArca–2007–103) (amending NYSE Arca Equities Rule 5.2(j)(1) (''Other Securities'')); and 56593 (October 1, 2007), 72 FR 57362 (October 9, 2007) (SR–NYSEArca–2007–96) (amending NYSE Arca Equities Rule 5.2(j)(6) (''Equity Index-Linked Securities, Commodity-Linked Securities and Currency-Linked Securities'')).

[7] *See* the May 2007 Amex Order, *supra* at note 5.

[8] *See* the May 2007 Amex Order (approving no minimum holders requirement if there is a weekly redemption right) and the October 2007 Amex Order (approving no minimum public distribution requirement if there is a weekly redemption right), *supra* at note 5.

[9] 15 U.S.C. 78f(b).

[10] 15 U.S.C. 78f(b)(5).

[11] 15 U.S.C. 78s(b)(3)(A).

[12] 17 CFR 240.19b–4(f)(6). The Exchange satisfied the requirement of this provision that the Exchange provide the Commission written notice of its intent to file the proposed rule change, along with a brief

Continued

A proposed rule change filed under Rule 19b–4(f)(6) normally does not become operative for 30 days after the date of filing. However, Rule 19b–4(f)(6)(iii) permits the Commission to designate a shorter time if such action is consistent with the protection of investors and the public interest. The Exchange requests that the Commission waive the 30-day operative delay and make the proposed rule change operative upon filing because the proposal raises no novel issues and is based on a previously approved proposal filed by NYSE Arca.[13] The Commission believes that waiving the 30-day operative delay is consistent with the protection of investors and the public interest because the Exchange's proposed amendment would conform its listing standards for Index-Linked Exchangeable Notes with respect to minimum public holders and public distribution to be substantively identical to the parallel listing standards of other national securities exchanges, which the Commission has previously approved. In addition, the Commission notes that it has also previously approved substantively identical rules for other new derivative security products.[14] The Commission further believes that the proposal should benefit investors by creating, without undue delay, additional competition in the market for Index-Linked Exchangeable Notes. For these reasons, the Commission designates the proposed rule change as operative upon filing.[15]

At any time within 60 days of the filing of such proposed rule change the Commission may summarily abrogate such rule change if it appears to the Commission that such action is necessary or appropriate in the public interest, for the protection of investors, or otherwise in furtherance of the purposes of the Act.

IV. Solicitation of Comments

Interested persons are invited to submit written data, views, and arguments concerning the foregoing, including whether the proposed rule change is consistent with the Act. Comments may be submitted by any of the following methods:

Electronic Comments

- Use the Commission's Internet comment form (*http://www.sec.gov/rules/sro.shtml*); or
- Send an e-mail to *rule-comments@sec.gov*. Please include File Number SR–NYSEArca–2008–13 on the subject line.

Paper Comments

- Send paper comments in triplicate to Nancy M. Morris, Secretary, Securities and Exchange Commission, 100 F Street, NE., Washington, DC 20549–1090.

All submissions should refer to File Number SR–NYSEArca–2008–13. This file number should be included on the subject line if e-mail is used. To help the Commission process and review your comments more efficiently, please use only one method. The Commission will post all comments on the Commission's Internet Web site (*http://www.sec.gov/rules/sro.shtml*). Copies of the submission, all subsequent amendments, all written statements with respect to the proposed rule change that are filed with the Commission, and all written communications relating to the proposed rule change between the Commission and any person, other than those that may be withheld from the public in accordance with the provisions of 5 U.S.C. 552, will be available for inspection and copying in the Commission's Public Reference Room, 100 F Street, NE., Washington, DC 20549, on official business days between the hours of 10 a.m. and 3 p.m. Copies of such filing also will be available for inspection and copying at the principal office of the Exchange. All comments received will be posted without change; the Commission does not edit personal identifying information from submissions. You should submit only information that you wish to make available publicly. All submissions should refer to File Number SR–NYSEArca–2008–13 and should be submitted on or before February 25, 2008.

For the Commission, by the Division of Trading and Markets, pursuant to delegated authority.[16]

Florence E. Harmon,

Deputy Secretary.

[FR Doc. E8–1961 Filed 2–1–08; 8:45 am]

BILLING CODE 8011–01–P

description and text of the proposed rule change, at least five business days prior to filing it.

[13] *See supra* at note 5.

[14] *See supra* at note 6.

[15] For purposes only of waiving the 30-day operative delay, the Commission has also considered the proposed rule's impact on efficiency, competition, and capital formation. *See* 15 U.S.C. 78c(f).

[16] 17 CFR 200.30–3(a)(12).

SECURITIES AND EXCHANGE COMMISSION

[Release No. 34–57224; File No. SR–Phlx–2008–03]

Self-Regulatory Organizations; Philadelphia Stock Exchange, Inc.; Notice of Filing and Immediate Effectiveness of Proposed Rule Change Relating to the Listing Standards for Index-Linked Securities

January 29, 2008.

Pursuant to section 19(b)(1) of the Securities Exchange Act of 1934 (''Act'')[1] and Rule 19b–4 thereunder,[2] notice is hereby given that on January 24, 2008, the Philadelphia Stock Exchange, Inc. (''Phlx'' or ''Exchange'') filed with the Securities and Exchange Commission (''Commission'') the proposed rule change as described in Items I, II, and III below, which Items have been substantially prepared by the Exchange. Phlx filed the proposal pursuant to section 19(b)(3)(A) of the Act[3] and Rule 19b–4(f)(6) thereunder,[4] which renders the proposal effective upon filing with the Commission. The Commission is publishing this notice to solicit comments on the proposed rule change from interested persons.

I. Self-Regulatory Organization's Statement of the Terms of Substance of the Proposed Rule Change

The Exchange proposes to amend Phlx Rule 803(n)(1) to permit the listing of Index-Linked Securities[5] that do not meet the minimum public holders and/or public distribution requirements when such Index-Linked Securities is redeemable at the option of the holders thereof on at least a weekly basis. The text of the proposed rule change is available at the Exchange, the Commission's Public Reference Room, and *http://www.phlx.com.*

II. Self-Regulatory Organization's Statement of the Purpose of, and Statutory Basis for, the Proposed Rule Change

In its filing with the Commission, Phlx included statements concerning the purpose of, and basis for, the proposed rule change and discussed any comments it received on the proposed rule change. The text of these statements

[1] 15 U.S.C. 78s(b)(1).

[2] 17 CFR 240.19b–4.

[3] 15 U.S.C. 78s(b)(3)(A).

[4] 17 CFR 240.19b–4(f)(6).

[5] Index-Linked Securities are securities that provide for the payment at maturity of a cash amount based on the performance of an underlying index or indexes. Such securities may or may not provide for the repayment of the original principal investment amount. *See* Phlx Rule 803(n).

may be examined at the places specified in Item IV below. The Exchange has prepared summaries, set forth in sections A, B, and C below, of the most significant aspects of such statements.

A. Self-Regulatory Organization's Statement of the Purpose of, and Statutory Basis for, the Proposed Rule Change

1. Purpose

The Exchange proposes to amend Phlx Rule 803(n), the Exchange's listing standards for Index-Linked Securities, to encourage trading of Index-Linked Securities on the Exchange. The Commission has recently approved a similar proposal by NYSE Arca, Inc. (''NYSE Arca'').[6]

Phlx Rule 803(n)(1) generally requires that each issue of Index-Linked Securities have at least one million publicly traded units and that there be at least 400 public holders, provided, however, that the minimum public distribution and public shareholders requirements do not apply to an issue traded in thousand dollar denominations. In addition, Phlx Rule 803(n)(1) provides that the minimum public shareholders requirement does not apply if the Index-Linked Securities are redeemable at the option of the holders thereof on at least a weekly basis. The Exchange proposes to add another exception to the general requirements of Phlx Rule 803(n)(1) such that, if an issue of Index-Linked Securities are redeemable at the option of the holders thereof on at least a weekly basis, then both the minimum public holders and public distribution requirements would not apply.

The Exchange believes that, where there is such a weekly redemption right, the same justification exists for an exemption from the requirement to have one million units issued at the time of listing as applies to the 400 public holder requirement. The Exchange believes that a weekly redemption right will ensure a strong correlation between the market price of the Index-Linked Securities and the performance of the underlying index, as holders will be unlikely to sell their securities for less than their redemption value if they have a weekly right to be redeemed for their full value. In addition, in the case of those Index-Linked Securities with a weekly redemption feature that are currently listed on a national securities exchange, as well as all of those that are currently proposed to be listed, the issuer has the ability to issue new Index-Linked Securities from time to time at the indicative value at the time of such sale. The Exchange believes that this provides a ready supply of new Index-Linked Securities, thereby lessening the possibility that the market price of such securities would be affected by a scarcity of available Index-Linked Securities for sale. The Exchange believes that it also assists in maintaining a strong correlation between the market price and the indicative value, as investors will be unlikely to pay more than the indicative value in the open market if they can acquire Index-Linked Securities from the issuer at that price.

The Exchange believes that the ability to list Index-Linked Securities with these characteristics without any minimum number of units issued or holders is important to the successful listing of such securities. Issuers issuing these types of Index-Linked Securities generally do not intend to do so by way of an underwritten offering. Rather, the distribution arrangement is analogous to that of an exchange-traded fund issuance, in that the issue is launched without any significant distribution event, and the float increases over time as investors purchase additional securities from the issuer at the then indicative value. Investors will generally seek to purchase the securities at a point when the underlying index is at a level that they perceive as providing an attractive growth opportunity. In the context of such a distribution arrangement, it is difficult for an issuer to guarantee its ability to sell a specific number of units on the listing date. However, the Exchange believes that this difficulty in ensuring the sale of one million units on the listing date is not indicative of a likely long-term lack of liquidity in the securities or, for the reasons set forth in the prior paragraph, of a difficulty in establishing a pricing equilibrium in the securities or a successful two-sided market.

2. Statutory Basis

The Exchange believes that its proposal is consistent with Section 6(b) of the Act,[7] in general, and furthers the objectives of Section 6(b)(5), in particular,[8] in that it is designed to promote just and equitable principles of trade, to remove impediments to and perfect the mechanism of a free and open market and a national market system, and, in general, to protect investors and the public interest.

B. Self-Regulatory Organization's Statement on Burden on Competition

The Exchange does not believe that the proposed rule change will impose any burden on competition that is not necessary or appropriate in furtherance of the purposes of the Act.

C. Self-Regulatory Organization's Statement on Comments on the Proposed Rule Change Received From Members, Participants, or Others

The Exchange states that no written comments on the proposed rule change were either solicited or received.

III. Date of Effectiveness of the Proposed Rule Change and Timing for Commission Action

Because the foregoing proposed rule change: (1) Does not significantly affect the protection of investors or the public interest; (2) does not impose any significant burden on competition; and (3) by its terms does not become operative for 30 days after the date of this filing, or such shorter time as the Commission may designate if consistent with the protection of investors and the public interest, the proposed rule change has become effective pursuant to section 19(b)(3)(A) of the Act[9] and Rule 19b–4(f)(6) thereunder.[10]

A proposed rule change filed under Rule 19b–4(f)(6) normally does not become operative for 30 days after the date of filing. However, Rule 19b–4(f)(6)(iii) permits the Commission to designate a shorter time if such action is consistent with the protection of investors and the public interest. The Exchange requests that the Commission waive the 30-day operative delay and make the proposed rule change operative upon filing because the proposal raises no novel issues and is based on a previously approved proposal filed by NYSE Arca.[11] The Commission believes that waiving the 30-day operative delay is consistent with the protection of investors and the public interest because the Exchange's proposed amendment would conform its listing standards for Index-Linked Securities with respect to minimum

[6] Securities Exchange Act Release No. 56593 (October 1, 2007), 72 FR 57362 (October 9, 2007) (SR–NYSEArca–2007–96) (providing, among other things, that, if an issue of Index-Linked Securities is redeemable at the option of the holders thereof on at least a weekly basis, both the minimum one million publicly held trading units and 400 beneficial holders initial distribution requirements would not apply).

[7] 15 U.S.C. 78f(b).

[8] 15 U.S.C. 78f(b)(5).

[9] 15 U.S.C. 78s(b)(3)(A).

[10] 17 CFR 240.19b–4(f)(6). In addition, Rule 19b–4(f)(6)(iii) requires a self-regulatory organization to provide the Commission with written notice of its intent to file the proposed rule change, along with a brief description and text of the proposed rule change, at least five business days prior to the date of filing of the proposed rule change, or such shorter time as designated by the Commission. The Exchange has fulfilled this requirement.

[11] *See supra* note 6.

public holders and public distribution to be substantively identical to the parallel listing standards of other national securities exchanges, which the Commission has previously approved.[12] In addition, the Commission notes that it has also previously approved substantively identical rules for other new derivative security products.[13] The Commission further believes that the proposal should benefit investors by creating, without undue delay, additional competition in the market for Index-Linked Securities. For these reasons, the Commission designates the proposed rule change as operative upon filing.[14]

At any time within 60 days of the filing of the proposed rule change, the Commission may summarily abrogate such rule change if it appears to the Commission that such action is necessary or appropriate in the public interest, for the protection of investors, or otherwise in furtherance of the purposes of the Act.

IV. Solicitation of Comments

Interested persons are invited to submit written data, views, and arguments concerning the foregoing, including whether the proposed rule change is consistent with the Act. Comments may be submitted by any of the following methods:

Electronic Comments

- Use the Commission's Internet comment form (*http://www.sec.gov/rules/sro.shtml*); or
- Send an e-mail to *rule-comments@sec.gov.* Please include File Number SR–Phlx–2008–03 on the subject line.

Paper Comments

- Send paper comments in triplicate to Nancy M. Morris, Secretary, Securities and Exchange Commission, 100 F Street, NE., Washington, DC 20549–1090.

All submissions should refer to File Number SR–Phlx–2008–03. This file number should be included on the subject line if e-mail is used. To help the Commission process and review your comments more efficiently, please use only one method. The Commission will post all comments on the Commission's Internet Web site (*http://www.sec.gov/rules/sro.shtml*). Copies of the submission, all subsequent amendments, all written statements with respect to the proposed rule change that are filed with the Commission, and all written communications relating to the proposed rule change between the Commission and any person, other than those that may be withheld from the public in accordance with the provisions of 5 U.S.C. 552, will be available for inspection and copying in the Commission's Public Reference Room, 100 F Street, NE., Washington, DC 20549, on official business days between the hours of 10 a.m. and 3 p.m. Copies of the filing also will be available for inspection and copying at the principal office of the Exchange. All comments received will be posted without change; the Commission does not edit personal identifying information from submissions. You should submit only information that you wish to make available publicly. All submissions should refer to File Number SR–Phlx–2008–03 and should be submitted on or before February 25, 2008.

For the Commission, by the Division of Trading and Markets, pursuant to delegated authority.[15]

Florence E. Harmon,

Deputy Secretary.

[FR Doc. E8–1962 Filed 2–1–08; 8:45 am]

BILLING CODE 8011–01–P

[12] *See, e.g.*, Section 107(A)(b) of the *Company Guide* for the American Stock Exchange LLC (''Amex''); Rule 5.2(j)(1)(A) of NYSE Arca Equities, Inc.; and Section 703.22(B)(1) of the Listed Company Manual for the New York Stock Exchange LLC.

[13] For example, in addition to applying to Index-Linked Securities, Section 107(A)(b) of the Amex *Company Guide* applies to other new derivative security products such as Index-Linked Exchangeable Notes.

[14] For purposes only of waiving the 30-day operative delay, the Commission has also considered the proposed rule's impact on efficiency, competition, and capital formation. *See* 15 U.S.C. 78c(f).

[15] 17 CFR 200.30–3(a)(12).

DEPARTMENT OF STATE

[Public Notice 6075]

Notice of Meeting of the Cultural Property Advisory Committee

There will be a meeting of the Cultural Property Advisory Committee on Thursday, March 6, 2008, from approximately 9 a.m. to 5 p.m., and on Friday, March 7, from approximately 9 a.m. to 3 p.m., at the Department of State, Annex 44, Room 840, 301 4th St., SW., Washington, DC. During its meeting the Committee will review a proposal to extend the Memorandum of Understanding Between the Government of the United States of America and the Government of the Kingdom of Cambodia Concerning the Imposition of Import Restrictions on Khmer Archaeological Material (''MOU''). The Government of the Kingdom of Cambodia has notified the Government of the United States of America of its interest in extending the MOU.

The Committee's responsibilities are carried out in accordance with provisions of the Convention on Cultural Property Implementation Act (19 U.S.C. 2601, *et seq.*). The text of the Act and subject MOU, as well as related information, may be found at *http://exchanges.state.gov/culprop*. Portions of the meeting on March 6 will be closed pursuant to 5 U.S.C. 552b(c)(9)(B) and 19 U.S.C. 2605(h), the latter of which stipulates that ''The provisions of the Federal Advisory Committee Act shall apply to the Cultural Property Advisory Committee except that the requirements of subsections (a) and (b) of section 10 and 11 of such Act (relating to open meetings, public notice, public participation, and public availability of documents) shall not apply to the Committee, whenever and to the extent it is determined by the President or his designee that the disclosure of matters involved in the Committee's proceedings would compromise the Government's negotiation objectives or bargaining positions on the negotiations of any agreement authorized by this title.'' However, on March 6, the Committee will hold an open session from approximately 9:30 a.m. to 11 a.m., to receive oral public comment on the proposal to extend. Such an open session is not a statutory requirement, nor is the invitation for public oral or written comment. These steps are taken at the initiative of the Department of State. Persons wishing to attend this open session should notify the Cultural Heritage Center of the Department of State at (202) 453–8800 no later than February 25, 2008, 5 p.m. (EST) to arrange for admission. Seating is limited.

Anyone wishing to make an oral presentation at the public session must request to be scheduled, and must submit a written text of the oral comments by February 25, 2008, to allow time for distribution to Committee members prior to the meeting. Oral comments will be limited to allow time for questions from members of the Committee and must specifically relate to the determinations under Section 303(a)(1) of the Convention on Cultural Property Implementation Act, 19 U.S.C. 2602, pursuant to which the Committee must make findings. This citation for the determinations can be found at the Web site noted above.

The Committee also invites written comments and asks that they be submitted no later than February 25,

2008, to allow time for distribution to Committee members prior to the meeting. All written materials, including the written texts of oral statements, may be faxed to (202) 453–8803. If more than three (3) pages, 20 duplicates of written materials must be sent by express mail to: Cultural Heritage Center, Department of State, Annex 44, 301 4th Street, SW., Washington, DC 20547; tel: (202) 453–8800.

Dated: January 25, 2008.

C. Miller Crouch,

Acting Assistant Secretary for Educational and Cultural Affairs, Department of State.

[FR Doc. E8–1953 Filed 2–1–08; 8:45 am]

BILLING CODE 4710–05–P

DEPARTMENT OF STATE

[Public Notice 6080]

Announcement of Meetings of the International Telecommunication Advisory Committee

Summary: This notice announces meetings of the International Telecommunication Advisory Committee (ITAC) to prepare advice on U.S. positions for the March/April 2008 meeting of the International Telecommunication Union Telecommunication Standardization Sector (ITU–T) Study Group 3 (Tariff and accounting principles including related telecommunication economic and policy issues) and the April 2008 meeting of the Organization of American States Inter-American Telecommunication Commission Permanent Consultative Committee I (Telecommunication) (OAS/CITEL/PCC.I).

The ITAC will meet to prepare advice for the U.S. on positions for the March/April 2008 meeting of the ITU-T Study Group 3 and related issues of the International Telecommunication Regulations on Tuesday afternoons February 19, March 4, 11, and 18, 2008 2–4PM EST in the Washington, DC metro area. Meeting details and detailed agendas will be posted on the mailing list *sga@eblist.state.gov.* People desiring to participate on this list may apply to the secretariat at *minardje@state.gov.*

The ITAC will meet to prepare advice for the U.S. on positions for the April 2008 meeting of the OAS CITEL PCC.I on Thursday February 21, 2008 10AM—noon EST at a location in the Washington, DC metro area. We expect this meeting to be continued as necessary. Meeting details and detailed agenda will be posted on the mailing list *pcc.i-citel@eblist.state.gov.* People desiring to participate on this list may apply to the secretariat at *minardje@state.gov.*

The meetings are open to the public.

Dated: January 28, 2008.

Marian R. Gordon,

International Communications & Information Policy, Department of State.

[FR Doc. E8–1950 Filed 2–1–08; 8:45 am]

BILLING CODE 4710–07–P

DEPARTMENT OF STATE

[Public Notice 6078]

Shipping Coordinating Committee; Notice of Meeting

The Shipping Coordinating Committee (SHC) through the Subcommittee on Standards of Training, Certification and Watchkeeping will conduct an open meeting at 9:30 a.m. on February 19, 2007. The meeting will be held in Room 10–623/0718 of Jemal's Riverside Building, 1900 Half Street, SW., Washington, DC 20593. The purpose of the meeting is to prepare for the 39th session of the International Maritime Organization (IMO) Sub-Committee on Standards of Training and Watchkeeping (STW 39) to be held on March 3–7, 2008, at the Royal Horticultural Halls and Conference Centre in London, England. The primary matters to be considered include:

—Comprehensive review of the International Convention on Standards of Training, Certification and Watchkeeping for Seafarers (STCW Convention) and the STCW Code;
—Training for seafarer safety representatives;
—Unlawful practices associated with certificates of competency;
—Validation of model training courses;
—Review of principles for establishing the safe manning levels of ships; and
—Training requirements for the control and management of ship's ballast water and sediments.

Please note that hard copies of documents associated with STW 39 will not be available at this meeting, the documents will be available at the meeting in portable document format (.pdf) on CD–ROM. To request documents before the meeting please write to the address provided below, and include your name, address, phone number, and electronic mail address. Copies of the papers will be sent via electronic mail to the address provided.

Members of the public may attend the meeting up to the seating capacity of the room. Interested persons may seek information by writing: Mayte Medina, U.S. Coast Guard (CG–5221), Room 1210, 2100 Second St., SW., Washington, DC 20593–0001 or by calling; (202) 372–1406.

Dated: January 28, 2008.

Mark W. Skolnicki,

Executive Secretary, Shipping Coordinating Committee, Department of State.

[FR Doc. E8–1952 Filed 2–1–08; 8:45 am]

BILLING CODE 4710–09–P

DEPARTMENT OF STATE

[Public Notice 6074]

Notice of Proposal To Extend the Memorandum of Understanding Between the Government of the United States of America and the Government of the Kingdom of Cambodia Concerning the Imposition of Import Restrictions on Khmer Archaeological Material

The Government of the Kingdom of Cambodia has informed the Government of the United States of its interest in an extension of the Memorandum of Understanding Between the Government of the United States of America and the Government of the Kingdom of Cambodia Concerning the Imposition of Import Restrictions on Khmer Archaeological Material which entered into force on September 19, 2003.

Pursuant to the authority vested in the Assistant Secretary for Educational and Cultural Affairs, and pursuant to the requirement under 19 U.S.C. 2602(f)(1), an extension of this Memorandum of Understanding is hereby proposed.

Pursuant to 19 U.S.C. 2602(f)(2), the views and recommendations of the Cultural Property Advisory Committee regarding this proposal will be requested.

A copy of the Memorandum of Understanding, the designated list of restricted categories of material, and related information can be found at the following Web site: *http://exchanges.state.gov/culprop.*

Dated: January 25, 2008.

C. Miller Crouch,

Acting Assistant Secretary for Educational and Cultural Affairs, Department of State.

[FR Doc. E8–1957 Filed 2–1–08; 8:45 am]

BILLING CODE 4710–05–P

DEPARTMENT OF STATE

[Public Notice 6089]

Termination of Statutory Debarment Pursuant to Section 38(g)(4) of the Arms Export Control Act for Peter Appelbaum

ACTION: Notice.

SUMMARY: Notice is hereby given that the Department of State has terminated the statutory debarment against Peter Appelbaum pursuant to section 38(g)(4) of the Arms Export Control Act (AECA) (22 U.S.C. 2778).

DATES: *Effective Date:* January 24, 2008.

FOR FURTHER INFORMATION CONTACT: David C. Trimble, Director, Office of Defense Trade Controls Compliance, Directorate of Defense Trade Controls, Bureau of Political-Military Affairs, Department of State (202) 663–2807.

SUPPLEMENTARY INFORMATION: Section 38(g)(4) of the AECA and section 127.11 of the International Traffic in Arms Regulations (ITAR) prohibit the issuance of export licenses or other approvals to a person, or any party to the export, who has been convicted of violating the AECA and certain other U.S. criminal statutes enumerated at section 38(g)(1)(A) of the AECA and section 120.27 of the ITAR. A person convicted of violating the AECA is also subject to statutory debarment under section 127.7 of the ITAR.

In October 1999, Peter Appelbaum was convicted of violating the AECA (U.S. District Court, Southern District of Florida, 1:99CR00530–001). Based on this conviction, Peter Appelbaum was statutorily debarred pursuant to section 38(g)(4) of the AECA and section 127.7 of the ITAR and, thus, prohibited from participating directly or indirectly in exports of defense articles and defense services. Notice of debarment was published in the **Federal Register** (68 FR 52436, September 3, 2003).

Section 38(g)(4) of the AECA permits termination of debarment after consultation with the other appropriate U.S. agencies and after a thorough review of the circumstances surrounding the conviction and a finding that appropriate steps have been taken to mitigate any law enforcement concerns. The Department of State has determined that Peter Appelbaum has taken appropriate steps to address the causes of the violations and to mitigate any law enforcement concerns. Therefore, in accordance with section 38(g)(4) of the AECA, the debarment against Peter Appelbaum is rescinded, effective January 24, 2008.

Dated: January 24, 2008.

Stephen D. Mull,

Acting Assistant Secretary of State for Political-Military Affairs, Department of State.

[FR Doc. E8–1948 Filed 2–1–08; 8:45 am]

BILLING CODE 4710–25–P

DEPARTMENT OF TRANSPORTATION

Federal Aviation Administration

Approval of Noise Compatibility Program; Hartsfield-Jackson Atlanta International Airport, Atlanta, GA

AGENCY: Federal Aviation Administration, DOT.

ACTION: Notice.

SUMMARY: The Federal Aviation Administration (FAA) announces its findings on the Noise Compatibility Program submitted by the City of Atlanta under the provisions of 49 U.S.C. (the Aviation Safety and Noise Abatement Act, hereinafter referred to as ''the Act'') and 14 CFR part 150. These findings are made in recognition of the description of Federal and nonfederal responsibilities in Senate Report No. 96–52 (1980). On April 10, 2007, the FAA determined that the noise exposure maps submitted by the City of Atlanta under Part 150 were in compliance with applicable requirements. On January 24, 2008, the FAA approved the Hartsfield-Jackson Atlanta International Airport Noise Compatibility Program. All of the recommendations of the program were approved. No program elements relating to new or revised flight procedures for noise abatement were proposed by the airport operator.

DATES: *Effective Dates:* The effective date of the FAA's approval of the Hartsfield-Jackson Atlanta International Airport Noise Compatibility Program is January 24, 2008.

FOR FURTHER INFORMATION CONTACT: Scott L. Seritt, Federal Aviation Administration, Atlanta Airports District Office, 1701 Columbia Avenue Campus Building, Suite 2–260, College Park, Georgia 30337, phone number: 404–305–7150. Documents reflecting this FAA action may be reviewed at this same location.

SUPPLEMENTARY INFORMATION: This notice announces that the FAA has given its overall approval to the Noise Compatibility Program for Hartsfield-Jackson Atlanta International Airport, effective January 24, 2008.

Under section 47504 of the Act, an airport operator who has previously submitted a Noise Exposure Map may submit to the FAA a Noise Compatibility Program which sets forth the measures taken or proposed by the airport operator for the reduction of existing non-compatible land uses and prevention of additional non-compatible land uses with the area covered by the Noise Exposure Maps. The Act requires such programs to be developed in consultation with interested and affected parties, including local communities, government agencies, airport users, and FAA personnel.

Each airport noise compatibility program developed in accordance with 14 CFR part 150 is a local program, not a Federal Program. The FAA does not substitute its judgment for that of the airport operator with respect to which measure should be recommended for action. The FAA's approval or disapproval of part 150 program recommendations is measured according to the standards expressed in part 150 and the Act, and is limited to the following determinations:

a. The Noise Compatibility Program was developed in accordance with the provisions and procedures of 14 CFR part 150;

b. Program measures are reasonably consistent with achieving the goals of reducing existing non-compatible land uses around the airport and preventing the introduction of additional non-compatible land uses;

c. Program measures would not create an undue burden on interstate or foreign commerce, unjustly discriminate against types of classes of aeronautical uses, violate the terms of airport grant agreements, or intrude into areas preempted by the Federal government; and

d. Program measures relating to the use of flight procedures can be implemented within the period covered by the program without derogating safety, adversely affecting the efficient use and management of the navigable airspace and air traffic control systems, or adversely affecting other powers and responsibilities of the Administrator prescribed by law.

Specific limitations with respect to FAA's approval of an airport Noise Compatibility Program are delineated in 14 CFR part 150, § 150.5 Approval is not a determination concerning the acceptability of land uses under Federal, state, or local law. Approval does not by itself constitute an FAA implementing action. A request for Federal action or approval to implement specific noise compatibility measures may be required, and an FAA decision on the request may require an environmental assessment of the proposed action. Approval does not constitute a

commitment by the FAA to financially assist the implementation of the program nor a determination that all measures covered by the program are eligible for grant-in-aid funding from the FAA. Where Federal funding is sought, requests for project grants must be submitted to the FAA Airports District Office in College Park, Georgia.

The City of Atlanta submitted to the FAA on March 29, 2007, the Noise Exposure Maps, descriptions, and other documentation produced during the noise compatibility planning study conducted from February 6, 2003, through September 5, 2007. The Hartsfield-Jackson Atlanta International Airport Noise Exposure Maps were determined by FAA to be in compliance with applicable requirements on April 10, 2007. Notice of this determination was published in the **Federal Register** on April 10, 2007.

The Hartsfield-Jackson Atlanta International Airport study contains a proposed Noise Compatibility Program comprised of actions designed for phased implementation by airport management and adjacent jurisdictions from September 5, 2007 beyond the year 2012. It was requested that FAA evaluate and approve this material as a Noise Compatibility Program as described in section 47504 of the Act. The FAA began is review of the Program on September 7, 2007, and was required by a provision of the Act to approve or disapprove the program within 180 days (other than the use of new or modified flight procedures for noise control). Failure to approve or disapprove such program within the 180-day period shall be deemed to be an approval of such program.

The submitted program contained seven (7) proposed actions for noise mitigation on and off the airport. The FAA completed its review and determined that the procedural and substantive requirements of the Act and 14 CFR part 150 have been satisfied. The overall program, therefore, was approved by the FAA effective January 24, 2008.

Outright approval was granted for all of the specific program elements. These determinations are set forth in detail in a Record of Approval signed by the FAA on January 24, 2008. The Record of Approval, as well as other evaluation materials and the documents comprising the submittal, are available for review at the FAA office listed above and at the administrative office of the City of Atlanta. The Record of Approval also will be available on-line at: *http://www.faa.gov/airports_airtraffic/airports/environmental/airport_noise/part_150/states/.*

Issued in College Park, Georgia, on January 25, 2008.

Scott L. Seritt,

Manager, Atlanta Airports District Office.

[FR Doc. 08–464 Filed 2–1–08; 8:45 am]

BILLING CODE 4910–13–M

DEPARTMENT OF TRANSPORTATION

Federal Aviation Administration

Research, Engineering and Development Advisory Committee

Pursuant to section 10(A)(2) of the Federal Advisory Committee Act (Pub. L. 92–463; 5 U.S.C. App. 2), notice is hereby given of a meeting of the FAA Research, Engineering and Development (R, E & D) Advisory Committee.

AGENCY: Federal Aviation Administration.

ACTION: Notice of meeting.

Name: Research, Engineering & Development Advisory Committee.

Time and Date: March 5, 2008—9 a.m. to 4 p.m.

Place: Federal Aviation Administration, 800 Independence Avenue, SW., Round Room (10th Floor), Washington, DC 20591.

Purpose: The meeting agenda will include receiving from the Committee guidance for FAA's research and development investments in the areas of air traffic services, airports, aircraft safety, human factors and environment and energy. Attendance is open to the interested public but seating is limited. Persons wishing to attend the meeting or obtain information should contact Gloria Dunderman at (202) 267–8937 or *gloria.dunderman@faa.gov.* Attendees will have to present picture ID at the security desk and be escorted to the Round Room.

Members of the public may present a written statement to the Committee at any time.

Issued in Washington, DC, on January 28, 2008.

Barry Scott,

Acting Director, Research & Technology Development.

[FR Doc. 08–463 Filed 2–1–08; 8:45 am]

BILLING CODE 4910–13–M

DEPARTMENT OF TRANSPORTATION

Federal Highway Administration

Express Lanes Demonstration Program

AGENCY: Federal Highway Administration (FHWA), DOT.

ACTION: Notice; request for applications.

SUMMARY: Section 1604(b) of the Safe, Accountable, Flexible, Efficient Transportation Equity Act: A Legacy for Users (SAFETEA–LU) (Pub. L. 109–59; Aug. 10, 2005), authorizes the Secretary of Transportation (Secretary) to carry out 15 demonstration projects to permit States, public authorities, or public or private entities designated by States, the authority to collect a toll from a motor vehicle on an eligible toll facility. This notice invites States, public authorities, or other entities as designated by States to apply to participate in the Express Lanes Demonstration Program. It also presents guidelines for program applications and participation.

DATES: Applications must be received no later than May 31, 2009.

FOR FURTHER INFORMATION CONTACT: For questions about this notice, contact Mr. Wayne Berman, Office of Operations, (202) 366–4069, (*Wayne.Berman@dot.gov*); for legal questions contact Mr. Michael Harkins, Attorney Advisor, Office of the Chief Counsel, (202) 366–4928, (*Michael.Harkins@dot.gov*). The FHWA is located at 1200 New Jersey Avenue, SE., Washington, DC 20590. Office hours are from 7:45 a.m. to 4:15 p.m., e.t., Monday through Friday, except Federal holidays.

SUPPLEMENTARY INFORMATION:

Electronic Access

An electronic copy of this document may be downloaded from the **Federal Register's** home page at: *http://www.archives.gov* and the Government Printing Office's database at: *http://www.access.gpo.gov/nara.*

Background

There is a growing consensus among transportation policymakers and economists that existing financing mechanisms for highway and aviation infrastructure are unsustainable in the long-term and will be unable to keep pace with projected demands on the transportation network. In May 2006, the National Strategy to Reduce Congestion on America's Transportation Network was introduced by the U.S. Department of Transportation to set forth several initiatives to relieve congestion.[1] The Express Lanes

[1] Speaking before the National Retail Federation's annual conference on May 16, 2006, in Washington, DC, former U.S. Transportation Secretary Norman Mineta unveiled a new plan to reduce congestion plaguing America's roads, rails, and airports. The National Strategy to Reduce Congestion on America's Transportation Network includes a number of initiatives designed to reduce transportation congestion. The transcripts of these remarks is available at the following URL: *http://www.dot.gov/affairs/minetasp051606.htm.*

Demonstration Program furthers the goals of the National Strategy to Reduce Congestion by allowing States to better manage congestion and improve their ability to finance new or expanded highway capacity through the use of tolling.

SAFETEA–LU offers States broader authority to use tolling on a pilot or demonstration basis. The Express Lanes Demonstration (ELD) program is a new pilot program that permits tolling on selected new and existing Interstate lanes to manage high levels of congestion, reduce emissions in a non-attainment or maintenance area, or finance added Interstate lanes for the purpose of reducing congestion. The ELD program is one of six Federal tolling programs. There is no special Federal funding specifically authorized for this program. For further information on other Federal tolling programs available, please refer to the **Federal Register** notice published on January 6, 2006 (71 FR 965), entitled ''Safe, Accountable, Flexible, Efficient Transportation Equity Act: A Legacy for Users (SAFETEA–LU); Opportunities for State and Other Qualifying Agencies to Gain Authority to Toll Facilities Constructed Using Federal Funds.''

Demonstration Projects

Section 1604(b)(2) authorizes the Secretary to carry out 15 demonstration projects under the ELD program. A demonstration project may include more than one facility so long as such facilities interrelate in a regional strategy to manage high levels of congestion, to reduce emissions in a nonattainment area, or to finance the expansion of a highway for the purpose of reducing traffic congestion. There is no special Federal funding specifically authorized for this program. Regular Federal-aid highway funds may be used, subject to the normal eligibility requirements for these funds.

Eligible Project Types

The ELD program permits tolling on any newly constructed Interstate or non-Interstate lanes. In addition, existing Interstate or non-Interstate facilities that are modified or constructed to create toll lanes are eligible to collect tolls on the entire facility. Additionally, existing Interstate or non-Interstate HOV facilities are eligible to collect tolls on the entire facility. Eligible toll facilities fall under four broad categories of new and existing highway capacity. Specifically, section 1604(b)(1)(A) of SAFETEA–LU lists the following four types of eligible toll facilities:

1. A facility in existence on August 10, 2005 (date of enactment of SAFETEA–LU), that collects tolls;
2. A facility in existence on August 10, 2005, that serves high occupancy vehicles (HOV);
3. A facility modified or constructed after August 10, 2005, to create additional tolled lane capacity, including a facility constructed by a private entity or using private funds; and
4. In the case of a new lane added to a previously non-tolled facility, only the new lane.

Definitions

For the purposes of the ELD program, the following definitions are provided to clarify various terms and phrases having special significance in the ELD program:

A ''demonstration project,'' for the purpose of this program, means a project that involves collecting a toll from a motor vehicle at an eligible toll facility for the purposes of meeting the goals set forth for this program.

A ''facility that serves high occupancy vehicles'' or ''HOV facility'' provides any preferential treatment through an exclusive lane(s), park-and-ride lots, or other support facilities or elements. The preferential treatment must give priority to buses, vanpools, carpools or high-occupancy vehicles either all or part of the day. The facility must have been in existence and providing such preferential treatment on August 10, 2005.

An ''HOV lane'' provides any preferential lane designated for exclusive use by vehicles with 2 or more occupants for all or part of a day, including a designated lane on a freeway, other highway or a street, or independent roadway on a separate right-of-way.

The phrase ''modified or constructed'' for the purposes of the ELD program means improvements made to the existing lanes. Examples include reconstruction, rehabilitation, resurfacing, or restoring the existing lanes, reconfiguration of entrance and exit ramps, the installation of toll barriers, and restriping to create additional lanes.

''Toll Agreement'' means the agreement required to be executed between the FHWA and a State and other public authorities or private entity to grant the authority to collect tolls. The toll agreement must be executed by the Executive Director of the FHWA and the relevant State department of transportation and other third parties, as appropriate, and shall provide that any toll revenues received from the operation of the toll facility will be used in accordance with section 1604(b)(3)(A) of SAFETEA–LU. Each executed agreement constitutes one demonstration project and must be executed between the FHWA, the relevant State department of transportation, and any other applicable public authority or private entity to a demonstration project prior to September 30, 2009.

Tolling Existing Capacity

There are two ways that existing non-tolled capacity may be tolled under this pilot program. First, section 1604(b)(1)(A)(ii) of SAFETEA–LU allows a State to toll a facility in existence on August 10, 2005, that serves high occupancy vehicles. As stated in the definitions, these facilities are those that provide any preferential treatment to buses, vanpools, carpools, or HOVs. One example of a facility eligible for tolling under this provision is one with a designated HOV lane. Another example of a facility that is eligible for tolling under this provision is one with designated commuter parking or is served by bus rapid transit.

Second, section 1604(b)(1)(A)(iii) allows a State to toll a facility that is modified or constructed after August 10, 2005, to create additional tolled lane capacity. This provision would allow States to toll the existing non-tolled lanes when a new toll-lane is created and the existing lanes are modified or constructed (note that section 1604(b)(1)(A)(iv) would only allow the new lane to be tolled if the existing lanes are not modified or constructed). While the existing lanes must be modified or constructed, improvements do not need to be made throughout the entire length of the project. Tolling will be permitted on the existing lanes if the improvements are expected to improve or benefit, directly or indirectly, the operational performance of the entire length of the facility proposed to be tolled. The State must demonstrate these benefits to the FHWA in the required application.

Toll Agreements

As provided at section 1604(b)(3)(C) of SAFETEA–LU, a toll agreement must be executed prior to the collection of tolls on any toll facility under a demonstration project. Since authority to carry-out demonstration projects is only granted through the end of fiscal year 2009, a toll agreement must be executed prior to September 30, 2009. While a toll agreement must be executed prior to September 30, 2009, tolling may commence anytime after this date. In general, the toll agreement will restrict the use of revenues collected on any toll

facilities operating under any demonstration project and will be executed by the FHWA, State, and other relevant public authorities or private parties. More details on the revenue use restrictions are discussed below.

Eligible Uses of Revenue

As provided in section 1604(b)(3)(A) of SAFETEA–LU, toll revenues received under the Express Lanes Demonstration Program shall be used by a State, public authority, or private entity designated by a State, for the following purposes:

1. Debt service;
2. Reasonable return on investment of any private financing;
3. To fund the costs necessary for proper operation and maintenance of any facilities used for this demonstration program (including reconstruction, resurfacing, restoration, and rehabilitation); or
4. If the State, public authority, or private entity annually certifies that the eligible toll facility is being adequately operated and maintained, the toll revenues may be used for any other purpose relating to a highway or transit project carried out under title 23 or 49, United States Code.

Electronic Toll Collection

As outlined in section 1604(b)(5) of SAFETEA–LU, fees collected under this program shall be collected only through the use of noncash electronic technology that optimizes the free flow of traffic on the tolled facility. Project sponsors are also encouraged to explore interoperability of other noncash electronic technology in their respective regions. In order to advance the requirements under this Section, a Notice of Proposed Rulemaking, titled ''Interoperability Requirements, Standards, or Performance Specifications for Automated Toll Collection Systems'' was published in the **Federal Register** on September 20, 2007, at 72 FR 53736.

HOV Lanes

As provided in section 1604(b)(3)(B)(iii) of SAFETEA–LU, a State may permit motor vehicles with a single occupant to operate in a HOV lane pursuant to 23 U.S.C. 166. Under 23 U.S.C. 166, a State may allow single occupant vehicles to operate in a HOV lane only if the operator is charged a toll. Additionally, 23 U.S.C. 166 permits single occupant motorcycles, bicycles, public transportation vehicles, inherently low emission vehicles (ILEVs), and other low emission and energy efficient vehicles to operate in a HOV lane. However, the exception for ILEVs and other low emission and energy efficient vehicles expires on September 30, 2009. Should a State allow any single occupant vehicles to use a HOV lane, 23 U.S.C. 166(d) mandates that the State carry-out certain responsibilities with respect to enforcement as well as monitoring, evaluating, and reporting on the impacts such vehicles have to the operation of the HOV lane. Title 23 U.S.C. 166(d) also requires the State to limit or discontinue the use of the facility by any single occupant vehicles should the presence of such vehicles on the facility degrade the facility's operation. Additionally, section 1604(b)(3)(B)(ii) requires that the tolls on any HOV facility vary in price according to time of day or level of traffic as appropriate to manage congestion or improve air quality.

Program Coordination and Assistance

The FHWA, Office of Operations, is responsible for coordinating all tolling and pricing programs that now exist under the Federal-aid highway program. The Express Lanes Demonstration Program is one of six tolling programs or provisions that currently exists for Federal-aid highways. The FHWA Tolling and Pricing Opportunities Web site is located at *http://www.ops.fhwa.dot.gov/tolling_pricing*.

The Office of Operations has formed a working group known as the ''Tolling and Pricing Team.'' The key role for the Tolling and Pricing Team is to assist public authorities by directing them to the most appropriate program (or programs) among the options available. Members of the Tolling and Pricing Team represent the FHWA Offices of Operations and Infrastructure—the primary offices responsible for administering each of the tolling and pricing programs—and other oversight offices within the U.S. Department of Transportation, including, but not limited to the Office of the Secretary and the FHWA Offices of the Administrator and Chief Counsel.

The ''Expression of Interest''

A public authority that wants to request authority under any Federal tolling program, including the Express Lanes Demonstration Program, or other tolling and funding authority is asked to submit an Expression of Interest to the Tolling and Pricing Team in care of the FHWA Office of Operations in Washington, DC at the address listed below. Submittal of an Expression of Interest is optional, but is strongly recommended so that the Tolling and Pricing Team can confirm that an application is best suited to the tolling authority requested. An Expression of Interest template can be downloaded at *http://www.ops.fhwa.dot.gov/tolling_pricing/participation.htm*. Use of the template is optional. The Expression of Interest may be attached as an e-mail to *TollingandPricingTeam@dot.gov,* or a hardcopy can be mailed to Mr. Wayne Berman, FHWA Office of Operations, HOTM, 1200 New Jersey Avenue, SE., Washington, DC 20590. Concurrently, the Expression of Interest should be copied to the respective State FHWA Division Office.

The Expression of Interest is a document—in letter, memo, or report format—that provides the rationale for the intended project. A complete Expression of Interest will enable the Tolling and Pricing Team to provide the best assistance and identify the range of options possible to meet intended goals and timeframes. The Tolling and Pricing Team reviews all ''Expressions of Interest'' for the various tolling opportunities contained in current law but does not have responsibility to approve or disapprove specific projects. That responsibility will remain with each of the respective FHWA program offices responsible for administering a specific tolling and pricing program. By requesting and reviewing all Expressions of Interest, the Tolling and Pricing Team can effectively guide an applicant to the most appropriate program.

Formal Application Procedures

Pursuant to section 1604(b)(4) of SAFETEA–LU, States, public authorities or private entities must submit a formal application to the FHWA in order to be eligible to participate in the program, regardless of whether the recommended Expression of Interest is submitted or not. Applicants are strongly encouraged to coordinate with their contacts at the FHWA Division office in their State as they are developing their application.

A formal application will only be approved if the project meets the necessary requirements and objectives of the program set forth in section 1604(b) of SAFETEA–LU. As outlined in section 1604(b)(4) of SAFETEA–LU, the formal application must contain the following information in order to qualify as a demonstration project:

1. A description of the project, including construction that may be involved;
2. An identification and description of the type of facility proposed to be tolled;
3. A specific description of which lanes are intended to be tolled, and for which limits;
4. A timeline of project development process, including key milestones over

the next 3 years and the anticipated date a toll agreement will be executed;

5. A description of the congestion or air quality problems sought to be addressed under the program;

6. A description of the performance goals sought to be achieved under the program, which should include goals related to addressing the effects on travel, traffic, and air quality; the distribution of benefits and burdens on users of the facility; the use of alternative modes of transportation; and the use of revenues to transportation or impact mitigation needs;

7. Plans for regular monitoring and reporting on the achievement of the project's performance goals;

8. An identification of the timing on when the facility will begin tolling motor vehicles and for how long a period tolling will be in effect;

9. Description of the type of noncash technology and standards that will be applied to automate the tolling operations; and

10. Description of tolling strategy considered, for instance, fixed or variable pricing.

The formal application should be submitted directly through the State Department of Transportation to the appropriate FHWA Division Administrator. The FHWA Division will then forward the application to Mr. Wayne Berman, c/o the Office of Operations, HOTM, 1200 New Jersey Avenue, SE., Washington, DC 20590, or via e-mail at *wayne.berman@dot.gov.* Upon finding that the application provides relevant information pertaining to the above listed factors, the FHWA will determine whether to accept the application and grant authority to toll motor vehicles on the facility. The FHWA's determination will based, in part, upon availability of program slots and competition with other pending and anticipated project applications, including projects that further the objectives of the ''Congestion Initiative'' (see *http://www.fightgridlocknow.gov/*), such as for the Corridors of the Future or the Urban Partnership Initiatives. Any applications received by the FHWA prior to the publication of this Notice need only address the minimum eligibility factors contained in section 1604(b)(4)(A) & (B) of SAFETEA–LU. For further questions about the formal application process, please contact Mr. Wayne Berman, Office of Operations at (202) 366–4069.

Performance Goals and Monitoring

Pursuant to section 1604(b)(7) of SAFETEA–LU, the Secretary, in cooperation with the State, public authority, private entity, and other program participants must develop performance goals for each project and publish such goals for public comment. These performance goals will first be proposed by the State, public authority, private entity, or other program participant in the formal application to participate in the program. These goals must include goals related to addressing the effects on travel, traffic, and air quality; the distribution of benefits and burdens on users of the facility; the use of alternative modes of transportation; and the use of revenues to transportation or impact mitigation needs. The FHWA will review the performance goals and provide feedback to the applicant if the FHWA has any questions or comments. Once satisfied with the project's performance goals, the FHWA will publish these goals in the **Federal Register** and solicit public comment, as required in section 1604(b).

Additionally, section 1604(b)(7) of SAFETEA–LU requires the Secretary, in cooperation with the State, public authority, private entity, and other program participants, to establish a program for regular monitoring and reporting on the achievement of the performance goals. A description of the monitoring program should be included in the project's application, and should include a process whereby the State, public authority, private entity, and other program participant will report on the project's achievement of the performance goals by March 31 of each year. In the case where a private entity has been designated by the State to carry out the demonstration project, the private entity shall work with the State in evaluating the performance goals. Once the FHWA is satisfied with the monitoring and reporting program, the FHWA will publish a description of the program in the **Federal Register** and solicit public comment.

The establishment of the performance goals and a monitoring program required by section 1604(b)(7) of SAFETEA–LU, including the publication of such goals and monitoring in the **Federal Register** and solicitation of public comment, does not need to occur prior to the FHWA's approval of the State's application.

Authority: Section 1604(b) of Public Law 109–59; 23 U.S.C. 315; 49 CFR 1.48.

Issued on: January 24, 2008.

J. Richard Capka,

Federal Highway Administrator.

[FR Doc. E8–1932 Filed 2–1–08; 8:45 am]

BILLING CODE 4910–22–P

DEPARTMENT OF TRANSPORTATION

Federal Motor Carrier Safety Administration

[Docket No. FMCSA–2006–25756]

Commercial Driver's License (CDL) Standards; Volvo Trucks North America, Renewal of Exemption

AGENCY: Federal Motor Carrier Safety Administration (FMCSA), DOT.

ACTION: Notice of renewal of exemption; request for comments.

SUMMARY: FMCSA renews Volvo Trucks North America's (Volvo) exemption from the Agency's requirement for certain drivers of commercial motor vehicles (CMVs) to hold a commercial driver's license (CDL). Volvo requested that its exemption for eight Swedish engineers and technicians be renewed to enable these individuals to continue test driving CMVs in the United States for Volvo. All of the individuals hold a valid Swedish CDL. FMCSA believes the knowledge and skills testing and training program that drivers must undergo for a Swedish CDL ensures a level of safety that is equivalent to, or greater than, the level of safety that would be obtained by complying with the U.S. requirement for a CDL.

DATES: This decision is effective February 4, 2008. Comments must be received on or before March 5, 2008.

ADDRESSES: You may submit comments identified by Federal Docket Management System Number FMCSA–2006–25756 by any of the following methods:

- Web Site: *http://www.regulations.gov.* Follow the instructions for submitting comments on the Federal electronic docket site.
- *Fax:* 1–202–493–2251.
- *Mail:* Docket Management Facility, U.S. Department of Transportation, Room W12–140, 1200 New Jersey Avenue, SE., Washington, DC 20590–0001.
- *Hand Delivery:* Ground Floor, Room W12–140, DOT Building, 1200 New Jersey Avenue, SE., Washington, DC, between 9 a.m. and 5 p.m. e.t., Monday through Friday, except Federal holidays.

Instructions: All submissions must include the Agency name and docket number. For detailed instructions on submitting comments and additional information on the exemption process, see the Public Participation heading below. Note that all comments received will be posted without change to *http://www.regulations.gov,* including any personal information provided. Please see the Privacy Act heading below.

Docket: For access to the docket to read background documents or comments received, go to *http://www.regulations.gov* at any time or to the ground floor, Room W12–140, DOT Building, New Jersey Avenue, SE., Washington, DC, between 9 a.m. and 5 p.m. e.t., Monday through Friday, except Federal holidays.

Privacy Act: Anyone is able to search the electronic form of all comments received into any of our dockets by the name of the individual submitting the comment (or signing the comment, if submitted on behalf of an association, business, labor union, etc.). You may review DOT's complete Privacy Act Statement in the **Federal Register** published on April 11, 2000 (65 FR 19477–78) or you may visit *http://www.regulations.gov.*

Public participation: The *http://www.regulations.gov* Web site is generally available 24 hours each day, 365 days each year. You can get electronic submission and retrieval help and guidelines under the ''help'' section of the *http://www.regulations.gov* web site and also at the DOT's *http://docketsinfo.dot.gov* Web site. If you want us to notify you that we received your comments, please include a self-addressed, stamped envelope or postcard or print the acknowledgement page that appears after submitting comments online.

FOR FURTHER INFORMATION CONTACT: Mr. Richard Clemente, FMCSA Driver and Carrier Operations Division; Office of Bus and Truck Standards and Operations; Telephone: 202–366–4325. E-mail: *MCPSD@dot.gov.*

SUPPLEMENTARY INFORMATION:

Background

Under 49 U.S.C. 31315 and 31136(e), FMCSA may renew an exemption from the commercial driver's license (CDL) requirements in 49 CFR 383.23 for a maximum 2-year period if it finds ''such exemption would likely achieve a level of safety that is equivalent to, or greater than, the level that would be achieved absent such exemption.'' The procedures for requesting an exemption (including renewals) are prescribed in 49 CFR part 381. FMCSA evaluated Volvo's application for a renewal on its merits and decided to grant renewal of the exemption for eight of Volvo's engineers and technicians for a 2-year period.

Volvo Application for an Exemption Renewal

Volvo Trucks North America (Volvo) applied for the renewal of an exemption from the commercial driver's licensing rules, specifically 49 CFR 383.23, which establishes licensing requirements for drivers operating commercial motor vehicles (CMVs) in interstate commerce. The exemption was originally granted on May 12, 2006 (71 FR 27780). Volvo is seeking a renewal of this exemption because the drivers it employs are citizens and residents of Sweden, and as such they cannot apply for a CDL from a State in the United States. A copy of the request for a renewal is in the docket identified at the beginning of this notice.

The renewal of the exemption will enable the following drivers to operate CMVs in the U.S. and continue to support Volvo's field tests to meet future clean air standards, to test drive prototype vehicles at their test site, and to deliver the vehicles, if necessary. These are eight of the eleven drivers included in the original exemption: Christer Milding, Jonas Gustafsson, Sten-Ake Sandberg, Daniel Kanebratt, Urban Walter, Fredrik Wattwil, Jonas Nilsson, and Bjorn Nyman.

These drivers are a team of designers, currently employed by Volvo in Sweden, who want to continue driving CMVs in the U.S. to test and evaluate prototype and production CMVs in order to design safe and well-tested vehicles for use on U.S. highways. They are experienced CMV operators with valid Swedish-issued CDLs. It is estimated that each driver would continue to drive approximately 2,500 miles per year on U.S. roads. Because each of the drivers was required to satisfy strict regulations in Sweden to obtain a CDL, and has extensive CMV training and experience, Volvo believes that the renewal of the exemption will continue to achieve a level of safety equivalent to the level of safety that would be obtained absent the exemption.

Method To Ensure an Equivalent or Greater Level of Safety

Drivers applying to obtain a Swedish CDL must take both a knowledge test and skills test before a license to operate CMVs is issued. This process is considered comparable to, or as effective as, the requirements of 49 CFR part 383 and adequately assesses the driver's ability to operate CMVs in the U.S.

Request for Comments

In accordance with 49 U.S.C. 31315(b)(4) and 31136(e), FMCSA requests public comments on the renewal of Volvo's exemption from the requirements of 49 CFR 383.23. The Agency requests that interested parties with specific data concerning the safety records of the drivers listed in this notice submit comments by March 5, 2008. FMCSA will review all comments received by this date and determine whether the renewal of the exemption is consistent with the requirements of 49 U.S.C. 31315 and 31136(e). Comments received after the comment closing date will be filed in the public docket and will be considered to the extent practicable, but FMCSA may make its final decision at any time after the close of the comment period.

FMCSA believes the requirements for a renewal of an exemption under 49 U.S.C. 31315 and 31136(e) can be satisfied by initially granting the renewal and then requesting and subsequently evaluating comments submitted by interested parties. As indicated above, the Agency previously published a notice of final disposition announcing its decision to exempt these eight Volvo drivers from the CDL requirement in 49 CFR 383.23. The decision to renew the exemption for these drivers was based on the merits of each driver's demonstrated knowledge and skills about the safe operation of CMVs, and only after careful consideration of the comments submitted in response to the February 9, 2006 original notice. The notice of application for exemption indicated that detailed information about the qualifications and experience of each of the drivers was provided in Volvo's application and that a copy of the application is in the docket referenced at the beginning of this notice.

Interested parties or organizations possessing information that would otherwise show that any or all of these drivers are not currently achieving the requisite statutory level of safety should immediately notify FMCSA. The Agency will evaluate any adverse information submitted and, if safety is being compromised or if the continuation of the exemption is not consistent with 49 U.S.C. 31315(b)(4) and 31136(e), FMCSA will take immediate steps to revoke the exemption of the driver(s) in question.

Issued on: January 28, 2008.

Larry W. Minor,

Associate Administrator for Policy and Program Development.

[FR Doc. E8–1931 Filed 2–1–08; 8:45 am]

BILLING CODE 4910–EX–P

DEPARTMENT OF TRANSPORTATION

Federal Transit Administration

[FTA Docket No. 2008–0007]

Notice of Request for the Extension of Currently Approved Information Collections

AGENCY: Federal Transit Administration, DOT.

ACTION: Notice of request for comments.

SUMMARY: In accordance with the Paperwork Reduction Act of 1995, this notice announces the intention of the Federal Transit Administration (FTA) to request the Office of Management and Budget (OMB) to extend the following currently approved information collection: Reporting of Technical Activities by FTA Grant Recipients.

DATES: Comments must be submitted before April 4, 2008.

ADDRESSES: To ensure that your comments are not entered more than once into the docket, submit comments identified by the docket number by only one of the following methods:

1. *Web site: http://www.regulations.gov.* Follow the instructions for submitting comments on the U.S. Government electronic docket site. (**Note:** The U.S. Department of Transportation's (DOT's) electronic docket is no longer accepting electronic comments.) All electronic submissions must be made to the U.S. Government electronic docket site at *http://www.regulations.gov.* Commenters should follow the directions below for mailed and hand-delivered comments.
2. *Fax:* 202–493–2251.
3. *Mail:* U.S. Department of Transportation, 1200 New Jersey Avenue, SE., Docket Operations, M–30, West Building, Ground Floor, Room W12–140, Washington, DC 20590–0001.
4. *Hand Delivery:* U.S. Department of Transportation, 1200 New Jersey Avenue, SE., Docket Operations, M–30, West Building, Ground Floor, Room W12–140, Washington, DC 20590–0001 between 9 a.m. and 5 p.m., Monday through Friday, except Federal holidays.

Instructions: You must include the agency name and docket number for this notice at the beginning of your comments. Submit two copies of your comments if you submit them by mail. For confirmation that FTA has received your comments, include a self-addressed stamped postcard. Note that all comments received, including any personal information, will be posted and will be available to Internet users, without change, to *http://www.regulations.gov.* You may review DOT's complete Privacy Act Statement in the **Federal Register** published April 11, 2000 (65 FR 19477), or you may visit *http://www.regulations.gov. Docket:* For access to the docket to read background documents and comments received, go to *http://www.regulations.gov* at any time. Background documents and comments received may also be viewed at the U.S. Department of Transportation, 1200 New Jersey Avenue, SE., Docket Operations, M–30, West Building, Ground Floor, Room W12–140, Washington, DC 20590–0001 between 9 a.m. and 5 p.m., Monday through Friday, except federal holidays.

FOR FURTHER INFORMATION CONTACT: Ms. Candace Noonan, Office of Planning and Environment, (202) 366–1648, or e-mail: *CandaceNoonan@dot.gov.*

SUPPLEMENTARY INFORMATION: Interested parties are invited to send comments regarding any aspect of these information collections, including: (1) The necessity and utility of the information collection for the proper performance of the functions of the FTA; (2) the accuracy of the estimated burden; (3) ways to enhance the quality, utility, and clarity of the collected information; and (4) ways to minimize the collection burden without reducing the quality of the collected information. Comments submitted in response to this notice will be summarized and/or included in the request for OMB approval of this information collection.

Title: Reporting of Technical Activities by FTA Grant Recipients, (*OMB Number: 2132–0549*).

Background: 49 U.S.C. 5305 authorizes the use of federal funds to assist metropolitan planning organizations (MPOs), states, and local public bodies in developing transportation plans and programs to serve future transportation needs of urbanized areas and nonurbanized areas throughout the nation. As part of this effort, MPOs and states are required to consider a wide range of goals and objectives and to analyze alternative transportation system management and investment strategies. These objectives are measured by definable activities such as planning certification reviews and other related activities.

The information collected is used to report annually to Congress, the Secretary, and to the Federal Transit Administrator on how grantees are responding to national emphasis areas and congressional direction, and allows FTA to track grantees' use of federal planning funds.

Respondents: FTA grant recipients.

Estimated Annual Burden on Respondents: 3 hours for each of the 52 respondents.

Estimated Total Annual Burden: 156 hours.

Frequency: Annual.

Issued: January 29, 2008.

Ann M. Linnertz,

Associate Administrator for Administration.

[FR Doc. E8–1935 Filed 2–1–08; 8:45 am]

BILLING CODE 4910–57–P

DEPARTMENT OF TRANSPORTATION

National Highway Traffic Safety Administration

[Docket No. NHTSA–2008–0023]

Reports, Forms, and Recordkeeping Requirements

AGENCY: National Highway Traffic Safety Administration, Department of Transportation (NHTSA).

ACTION: Request for public comment on proposed collection of information.

SUMMARY: Before a Federal agency can collect certain information from the public, it must receive approval from the Office of Management and Budget (OMB). Under procedures established by the Paperwork Reduction Act of 1995, before seeking OMB approval, Federal agencies must solicit public comment on proposed collections of information, including extensions and reinstatement of previously approved collections.

This document describes one collection of information for which NHTSA intends to seek OMB approval concerning an extension of motorcycle helmet labeling (OMB control number 2127–0518).

DATES: Comments must be received on or before April 4, 2008.

ADDRESSES: You may submit comments to the docket number identified in the heading of this document by any of the following methods:

- *Federal eRulemaking Portal:* Go to *http://www.regulations.gov.* Follow the online instructions for submitting comments.
- *Mail:* Docket Management Facility, M–30, U.S. Department of Transportation, West Building, Ground Floor, Rm. W12–140, 1200 New Jersey Avenue, SE., Washington, DC 20590.
- *Hand Delivery or Courier:* West Building, Ground Floor, Room W12–140, 1200 New Jersey Avenue, SE., between 9 a.m. and 5 p.m. Eastern Time, Monday through Friday, except Federal holidays.
- *Fax:* (202) 493–2251.

You may call the Docket Management Facility at 202–366–9826.

Regardless of how you submit your comments, you should mention the docket number of this document.

FOR FURTHER INFORMATION CONTACT: Complete copies of each request for collection of information may be obtained at no charge from Mr. Sean Doyle, NHTSA, 1200 New Jersey Avenue, SE., Room W43–414, NVS–111, Washington, DC 20590.

Mr. Doyle's telephone number is (202) 493–0188. Please identify the relevant collection of information by referring to its OMB Control Number.

SUPPLEMENTARY INFORMATION: Under the Paperwork Reduction Act of 1995, before an agency submits a proposed collection of information to OMB for approval, it must first publish a document in the **Federal Register** providing a 60-day comment period and otherwise consult with members of the public and affected agencies concerning each proposed collection of information. The OMB has promulgated regulations describing what must be included in such a document. Under OMB's regulation (at 5 CFR 1320.8(d)), an agency must ask for public comment on the following:

(i) Whether the proposed collection of information is necessary for the proper performance of the functions of the agency, including whether the information will have practical utility;

(ii) The accuracy of the agency's estimate of the burden of the proposed collection of information, including the validity of the methodology and assumptions used;

(iii) How to enhance the quality, utility, and clarity of the information to be collected;

(iv) How to minimize the burden of the collection of information on those who are to respond, including the use of appropriate automated, electronic, mechanical, or other technological collection techniques or other forms of information technology, e.g. permitting electronic submission of responses.

In compliance with these requirements, NHTSA asks for public comments on the following proposed collections of information:

(1) *Title:* 49 CFR 571.218, Motorcycle Helmets (Labeling).

OMB Number: 2127–0518.

Type of Request: Extension of a currently approved collection.

Affected Public: Motorcycle helmet manufacturers

Abstract: The National Traffic Vehicle Safety statute at 49 U.S.C. subchapter II standards and compliance, sections 30111 and 30117, authorizes the issuance of Federal motor vehicle safety standards (FMVSS). The Secretary is authorized to issue, amend, and revoke such rules and regulations as he/she deems necessary. The Secretary is also authorized to require manufacturers to provide information to first purchasers of motor vehicles or motor vehicle equipment when the vehicle equipment is purchased, in the form of printed matter placed in the vehicle or attached to the motor vehicle or motor vehicle equipment.

Using this authority, the agency issued the initial FMVSS No. 218, Motorcycle Helmets, in 1974. Motorcycle helmets are devices used to protect motorcyclists from head injury in motor vehicle accidents. FMVSS No. 218 S5.6 requires that each helmet shall be labeled permanently and legibly in a manner such that the label(s) can be read easily without removing padding or any other permanent part.

Estimated Total Annual Burden: 5,000 hours.

Estimated Number of Respondents: 45.

Instructions: For detailed instructions on submitting comments and additional information on the rulemaking process, see the Public Participation heading of the **SUPPLEMENTARY INFORMATION** section of this document. Note that all comments received will be posted without change to *http://www.regulations.gov*, including any personal information provided.

Comments are invited on:

Whether the proposed collections of information are necessary for the proper performance of the functions of the Department, including whether the information will have practical utility; the accuracy of the Department's estimate of the burden of the proposed information collection; ways to enhance the quality, utility, and clarity of the information to be collected; and ways to minimize the burden of the collection of information on respondents, including the use of automated collection techniques or other forms of information technology.

Public Participation

How Do I Prepare and Submit Comments?

Your comments must be written and in English. To ensure that your comments are correctly filed in the Docket, please include the docket number of this document in your comments. Your comments must not be more than 15 pages long.[1] We established this limit to encourage you to write your primary comments in a concise fashion. However, you may attach necessary additional documents to your comments. There is no limit on the length of the attachments.

If you are submitting comments electronically as a PDF (Adobe) file, we ask that the documents submitted be scanned using Optical Character Recognition (OCR) process, thus allowing the agency to search and copy certain portions of your submissions.[2]

Please note that pursuant to the Data Quality Act, in order for substantive data to be relied upon and used by the agency, it must meet the information quality standards set forth in the OMB and DOT Data Quality Act guidelines. Accordingly, we encourage you to consult the guidelines in preparing your comments. OMB's guidelines may be accessed at *http://www.whitehouse.gov/omb/fedreg/reproducible.html.* DOT's guidelines may be accessed at *http://dmses.dot.gov/submit/DataQualityGuidelines.pdf.*

How Can I Be Sure That My Comments Were Received?

If you submit your comments by mail and wish Docket Management to notify you upon its receipt of your comments, enclose a self-addressed, stamped postcard in the envelope containing your comments. Upon receiving your comments, Docket Management will return the postcard by mail.

How Do I Submit Confidential Business Information?

If you wish to submit any information under a claim of confidentiality, you should submit three copies of your complete submission, including the information you claim to be confidential business information, to the Chief Counsel, NHTSA, at the address given above under **FOR FURTHER INFORMATION CONTACT**. When you send a comment containing information claimed to be confidential business information, you should include a cover letter setting forth the information specified in our confidential business information regulation.[3]

In addition, you should submit a copy, from which you have deleted the claimed confidential business information, to the Docket by one of the methods set forth above.

[1] *See* 49 CFR 553.21.

[2] Optical character recognition (OCR) is the process of converting an image of text, such as a scanned paper document or electronic fax file, into computer-editable text.

[3] *See* 49 CFR part 512.

Will the Agency Consider Late Comments?

We will consider all comments received before the close of business on the comment closing date indicated above under **DATES**. To the extent possible, we will also consider comments received after that date.

How Can I Read the Comments Submitted By Other People?

You may read the materials placed in the docket for this document (e.g., the comments submitted in response to this document by other interested persons) at any time by going to *http://www.regulations.gov*. Follow the online instructions for accessing the dockets. You may also read the materials at the Docket Management Facility by going to the street address given above under **ADDRESSES**. The Docket Management Facility is open between 9 am and 5 pm Eastern Time, Monday through Friday, except Federal holidays.

Authority: 44 U.S.C. 3506(c); delegation of authority at 49 CFR 1.50.

Issued on: January 29, 2008.

Stephen R. Kratzke,

Associate Administrator for Rulemaking.

[FR Doc. E8–1938 Filed 2–1–08; 8:45 am]

BILLING CODE 4910–59–P

DEPARTMENT OF TRANSPORTATION

National Highway Traffic Safety Administration

Reports, Forms and Recordkeeping Requirements; Agency Information Collection Activity Under OMB Review

AGENCY: National Highway Traffic Safety Administration, DOT.

ACTION: Notice.

SUMMARY: In compliance with the Paperwork Reduction Act of 1995 (44 U.S.C. 3501 et seq.), this notice announces that the Information Collection Request (ICR) abstracted below has been forwarded to the Office of Management and Budget (OMB) for review and comment. The ICR describes the nature of the information collections and their expected burden. The **Federal Register** Notice with a 60-day comment period was published on November 9, 2007 [72 FR 63650].

DATES: Comments must be submitted on or before March 5, 2008.

FOR FURTHER INFORMATION CONTACT: Anetris Campbell at the National Highway Traffic Safety Administration, Office of Rulemaking (NVS–100), 202–366–0933. 1200 New Jersey Avenue, SE., Room W45–331, Washington, DC 20590.

SUPPLEMENTARY INFORMATION:

National Highway Traffic Safety Administration

Title: 49 CFR part 552, Petitions for Rulemaking, Defects, and Noncompliance Orders.

OMB Number: 2127–0046.

Type of Request: Extension of a currently approved collection.

Abstract: 49 U.S.C. 30162 specifies that any ''interested person may file a petition with the Secretary of Transportation requesting the Secretary to begin a proceeding'' to prescribe a motor vehicle safety standard under 49 U.S.C. chapter 301, or to decide whether to issue an order under 49 U.S.C. 30118(b). 49 U.S.C. 30111 gives the Secretary authority to prescribe motor vehicle safety standards. 49 U.S.C. 30118(b) gives the Secretary authority to issue an order to a manufacturer to notify vehicle or equipment owners, purchasers, and dealers of the defect or noncompliance and to remedy the defect or noncompliance.

Section 30162 further specifies that all petitions filed under its authority shall set forth the facts, which it is claimed establish that an order is necessary and briefly describe the order the Secretary should issue.

Affected Public: Business or other-for-profit.

Estimated Total Annual Burden: 20.

ADDRESSES: Send comments, within 30 days, to the Office of Information and Regulatory Affairs, Office of Management and Budget, 725–17th Street, NW., Washington, DC 20503, Attention NHTSA Desk Officer.

Comments are invited on: Whether the proposed collection of information is necessary for the proper performance of the functions of the Department, including whether the information will have practical utility; the accuracy of the Department's estimate of the burden of the proposed information collection; ways to enhance the quality, utility and clarity of the information to be collected; and ways to minimize the burden of the collection of information on respondents, including the use of automated collection techniques or other forms of information technology.

A Comment to OMB is most effective if OMB receives it within 30 days of publication.

Issued on: January 29, 2008.

Stephen R. Kratzke,

Associate Administrator for Rulemaking.

[FR Doc. E8–1939 Filed 2–1–08; 8:45 am]

BILLING CODE 4910–59–P

DEPARTMENT OF TRANSPORTATION

National Highway Traffic Safety Administration

[U.S. DOT Docket No. NHTSA–2007–0043]

Reports, Forms, and Recordkeeping Requirements

AGENCY: National Highway Traffic Safety Administration (NHTSA), DOT.

ACTION: Request for public comment on proposed collection of information.

SUMMARY: Before a Federal agency can collect certain information from the public, it must receive approval from the Office of Management and Budget (OMB). Under procedures established by the Paperwork Reduction Act of 1995, before seeking OMB approval, Federal agencies must solicit public comment on proposed collections of information, including extensions and reinstatements of previously approved collections.

This document describes one collection of information for which NHTSA intends to seek OMB approval.

DATES: Comments must be received on or before April 4, 2008.

ADDRESSES: Direct all written comments to U.S. Department of Transportation Dockets, 1200 New Jersey Ave, SE., Washington, DC 20590. Docket No. NHTSA–2007–0043.

FOR FURTHER INFORMATION CONTACT: Mr. Keith Williams, Contracting Officer's Technical Representative, Highway Safety Specialist, Enforcement and Justice Services Division, NTI–122, National Highway Traffic Safety Administration, 1200 New Jersey Avenue, SE., Room W44–231, Washington, DC 20590.

SUPPLEMENTARY INFORMATION: Under the Paperwork Reduction Act of 1995, before an agency submits a proposed collection of information to OMB for approval, it must publish a document in the **Federal Register** providing a 60-day comment period and otherwise consult with members of the public and affected agencies concerning each proposed collection of information. The OMB has promulgated regulations describing what must be included in such a document. Under OMB's regulations (at 5 CFR 1320.8(d)), an agency must ask for public comment on the following:

(i) Whether the proposed collection of information is necessary for the proper performance of the functions of the agency, including whether the information will have practical utility;

(ii) The accuracy of the agency's estimate of the burden of the proposed collection of information, including the

validity of the methodology and assumptions used;

(iii) How to enhance the quality, utility, and clarity of the information to be collected; and

(iv) How to minimize the burden of the collection of information on those who are to respond, including the use of appropriate automated, electronic, mechanical, or other technological collection techniques or other forms of information technology, e.g., permitting electronic submission of responses.

In compliance with these requirements, NHTSA asks public comment on the following proposed collection of information:

Evaluation Surveys for Demonstration of Speed Management Programs (including Automated and Traditional Enforcement)

Type of Request—New information collection requirement.

OMB Clearance Number—None.

Form Number—This collection of information uses no standard forms.

Requested Expiration Date of Approval—3 years from date of approval.

Summary of the Collection of Information—NHTSA proposes to conduct telephone surveys to evaluate an intervention designed to reduce speeding. Sample size will range from 200 to 400 per survey wave depending on the geographic area unit being surveyed (State, community) and the evaluation design for the intervention (e.g., number of analytic groups). Interview length will be approximately10 minutes. The surveys will collect information on attitudes, awareness knowledge, and behavior related to the speed management program intervention. Surveys will be administered in areas where NHTSA is conducting speed management enforcement demonstration projects and similar control sites. The surveys will follow a pre-post design where they are administered prior to the implementation of the intervention and after its conclusion. Interim survey waves may also be administered if the duration of the intervention permits.

In conducting the proposed surveys, the interviewers will use computer-assisted telephone interviewing to reduce interview length and minimize recording errors. A Spanish Language translation and bilingual interviewers will be used to minimize language barriers in participation. The proposed surveys will be anonymous.

Description of the Need for the Information and Proposed Use of the Information

The National Highway Traffic Safety Administration's (NHTSA) mission is to save lives, prevent injuries, and reduce healthcare and other economic costs associated with motor vehicle crashes. The agency's goal is to reduce the rate of fatalities from speeding-related crashes. The National Highway Traffic Safety Administration (NHTSA) was established to reduce the mounting number of deaths, injuries, and economic losses resulting from motor vehicle crashes on the Nation's highways. As part of this statutory mandate, NHTSA is authorized to conduct research as a foundation for the development of motor vehicle standards and traffic safety programs.

NHTSA has periodically updated its knowledge and understanding of the public's attitudes and behaviors with respect to speeding. In 1998, NHTSA conducted a national survey (National Survey of Speeding and Other Unsafe Driving Actions: Volume III: Countermeasures, Final Report) which indicated 71% of the general public favored automated devices for speed enforcement, and 76% believed the use of automated devices reduced speeding-related accidents. This survey also showed females were 15% more likely to be in favor of using automated speed enforcement than males, as well as, reasons why the public liked or disliked automated speeding devices. Twenty percent (20%) liked automated speeding devices because photo evidence proved a violation and 19% liked it because it increased driver awareness and fewer law enforcement officers were needed for traffic enforcement. Twenty-six percent (26%) did not like automated speeding enforcement because it invaded privacy, was a violation of rights or was a governmental infringement. Four years later NHTSA sponsored another national survey (National Survey of Speeding and Unsafe Driving Attitudes and Behavior: 2002: Volume II.) that found 68% of the general public believed the use of automated speed enforcement was good for anyone driving at least 20 miles per hour more than the speed limit, and 78% favored automated enforcement in a school zone. Fifty-Six percent (56%) of the public favored photos being taken of the driver from a frontal view while 32% favored taking photos of the rear license plate only. Since these surveys were conducted years ago they cannot be used to evaluate new programs scheduled to be initiated in the next few years.

Beginning in 2008, NHTSA intends to administer a demonstration project over a three-year period that will include two years where selected sites will incorporate both traditional law enforcement and use of automated enforcement of speeding in the demonstration area. The demonstration project will be accompanied by a Public Information and Education campaign about speeding and driving safety. Before and after this demonstration project, NHTSA will conduct telephone surveys in waves of up to 400 adult drivers living in the selected demonstration project areas, as well as, a comparison area. These surveys will measure the change in public attitude about speeding and driving behavior resulting from the enforcement and Public Information and Education campaigns.

These surveys will collect the following type of information: Whether members of the general public support automated enforcement; if the support varies by the specific speed being traveled; where the speeding occurs, such as a school zone or other road type; whether there is a preference for photos to be taken of the driver versus the license plate of the vehicle; whether there are a differences by sex or age; the reasons for supporting or not supporting automated speed enforcement versus traditional law enforcement officer enforcement; whether members of the general public are aware of the public information campaign in their area about speeding; whether this public information campaign has caused them to change their opinions toward speeding or whether the public information campaign has affected their behavior by causing them to be more careful about observing speed limits or reducing the speed they drive; the overall effectiveness of the public information campaign; determining what is an appropriate balance between automated speed enforcement and traditional law enforcement officer enforcement; whether members of the general public believe automated speeding enforcement should be expanded, and the effectiveness of automated and traditional enforcement measures on reducing crashes, injuries and saving lives.

These surveys will help NHTSA to evaluate a demonstration project on speed management using automated and traditional speed enforcement. The findings will be used to help focus the program and determine which activities achieve the greatest benefit. This information will then be used to develop new programs to decrease the likelihood of speeding, and to provide

informational support to States, localities, and law enforcement agencies that will aid them in their efforts to reduce speeding crashes and injuries. This demonstration project could be a model for how jurisdictions can develop a self-sustaining and effective speed management program using both traditional and automated speed enforcement methods. A demonstration project incorporating rational speed limits, a public communications plan and rigorously enforced speed limits over a defined geographic area will assist jurisdictions in understanding how to gain higher compliance with speed limits and bring about a reduction in speeding-related crashes, injuries and deaths.

Description of the Likely Respondents (Including Estimated Number and Proposed Frequency of Response to the Collection of Information)

Under this proposed effort, NHTSA intends to conduct telephone surveys to collect data from up to 1,600 licensed drivers age 18 and older. Interviews will be conducted with persons at residential phone numbers selected through random digit dialing and located within the jurisdiction where the speed enforcement demonstration project is conducted, as well as control areas. Businesses will be ineligible for the sample and will not be interviewed. No more than one respondent will be selected per household. Each member of the sample will complete one interview. After each wave is completed and the data analyzed, the findings will be disseminated to the participating States for review.

Estimate of the Total Annual Reporting and Recordkeeping Burden Resulting From the Collection of Information

NHTSA estimates the respondents in the sample will require an average of 10 minutes to complete the telephone interviews. Thus, the estimated reporting burden hours on the general public will be a maximum of 137 hours per year, for two years. The respondents will not incur any reporting cost from the information collection. The respondents also will not incur any record keeping burden or record keeping cost from the information collection.

Authority: 44 U.S.C. 3506(c)(2)(A).

Marilena Amoni,

Associate Administrator, Research and Program Development.

[FR Doc. E8–2016 Filed 2–1–08; 8:45 am]

BILLING CODE 4910–59–P

DEPARTMENT OF THE TREASURY

Community Development Financial Institutions Fund

Request for Public Comments, Community Development Financial Institutions Program

AGENCY: Community Development Financial Institutions Fund, Department of the Treasury.

SUMMARY: This document invites comments from the public on certain issues regarding, for purposes of the Community Development Financial Institutions (CDFI) Program, the CDFI Fund's certification of entities as CDFIs, pursuant to the CDFI Program regulations set forth at 12 CFR 1805.201. All materials submitted will be available for public inspection and copying.

DATES: Written comments should be received on or before March 5, 2008 to be assured of consideration.

ADDRESSES: Comments should be sent by mail to: Certification and Training Manager, CDFI Fund, U.S. Department of the Treasury, 601 13th Street, NW., Suite 200 South, Washington, DC 20005; by e-mail to *cdfihelp@cdfi.treas.gov*; or by facsimile at (202) 622–7754. This is not a toll free number.

FOR FURTHER INFORMATION CONTACT: Information regarding the CDFI Fund and its programs may be downloaded from the CDFI Fund's Web site at *http://www.cdfifund.gov*.

SUPPLEMENTARY INFORMATION: The Community Development Banking and Financial Institutions Act of 1994 (12 U.S.C. 4701 *et seq.*) authorizes the CDFI Fund to select and provide financial assistance and technical assistance to eligible applicants through the CDFI Program. Pursuant to 12 U.S.C. 4702(5)(a) and in accordance with regulations set forth at 12 CFR 1805.201, the CDFI Fund certifies eligible entities as CDFIs. The capitalized terms found in this notice are defined in the CDFI Program regulations found at 12 CFR part 1805. Through this notice, the CDFI Fund is seeking comments from the public regarding the CDFI Fund's certification of organizations as CDFIs. Commentators are encouraged to consider, at a minimum, the following issues:

(1) *Primary Mission Criteria:* To be certified as a CDFI, the entity must have a primary mission of community development (12 CFR 1805.201(b)(1)).

(a) Should the primary mission criteria differ by organization type? If so, how?

(b)(i) Should the CDFI Fund consider the types of Financial Products offered by an entity as relevant to the primary mission criteria? Specifically, should the CDFI Fund review, as part of the certification process, evidence of the affordability of an entity's Financial Products to the intended customers?

(ii) How else might the CDFI Fund ensure that CDFI certification is not given to entities that engage in what are commonly called ''predatory lending practices'' or include so-called ''predatory lending terms'' in their lending products?

(iii) Should the CDFI Fund require entities to provide Financial Products at a cost that is at least comparable to market rates or at some minimum level of affordability to their Target Markets in order to satisfy the primary mission criteria? If yes, how should market rates or minimum levels of affordability be determined?

(2) *Financing Entity Criteria:* To be certified as a CDFI, an entity's predominant business activity must be the provision, in arms-length transactions, of Financial Products, Development Services, and/or other similar financing (12 CFR 1805.201(b)(2)).

(a)(i) What minimum level of financing activity (i.e., number of transactions, dollar amount of transactions, years of operation, and/or financing) should the CDFI Fund consider to be acceptable to determine that an entity is a financing entity?

(ii) How might this minimum level differ among organization types?

(b)(i) Is three (3) months worth of financing capital a reasonable measure of an entity's ability to sustain its financing activities? Should the period of time be longer or shorter?

(ii) What other measure(s) should the CDFI Fund use to determine that an entity can sustain its financing activities?

(c) The CDFI Fund's definition of Financial Products includes Loans, Equity Investments, and similar financing activities (as determined by the CDFI Fund) including the purchase of loans originated by certified CDFIs and the provision of loan guarantees. Should the CDFI Fund expand this definition? If so, what other products should be included?

(3) *Target Market Criteria:* In order to be certified as a CDFI, an entity must serve a Target Market consisting of one or more Investment Areas and/or Targeted Populations (12 CFR 1805.201(b)(3)).

(a) Are the CDFI Fund's Target Market options (Investment Area, Low Income Target Population, and Other Targeted Population) clear? If not, how can the

CDFI Fund make the options more clear?

(b) Should a certification applicant be required to demonstrate a track record of serving the requested Target Market? If so, what is an appropriate minimum time-frame to establish such a track record? Please provide reasons to support your response.

(c) Should the CDFI Fund allow different types of organizations to meet the Target Market requirement at different benchmarks (i.e., percentage of activities directed toward the Target Market could deviate from the required 60 percent level for certain types of organizations)? If so, what level of activity would be acceptable for specific organization types?

(c) Should certification applicants be required to have a physical presence in their Target Markets (i.e., a branch, an office, local partners)? If so, what is an acceptable minimum level of presence?

(4) *Accountability Criteria:* To be certified as a CDFI, an entity must maintain accountability to residents of its Target Market through representation on its governing board or otherwise (12 CFR 1805.201(b)(5)).

(a) (i) How many governing and/or advisory board members representing a Target Market should the CDFI Fund require to determine that an entity is accountable to its Target Market?

(ii) How should the geographic size, population density of the Target Market, and/or board type (governing vs. advisory) factor into the number of representative board members necessary to demonstrate accountability to a Target Market?

(b) Should the CDFI Fund expand or restrict the ways that board members can be deemed to be representative of a Target Market?

(c) (i) Should the CDFI Fund continue to allow certification applicants to demonstrate accountability to Target Markets through ''other mechanisms'' (i.e. annual meetings, surveys)?

(ii) If so, what additional types of mechanisms should be considered to demonstrate accountability?

(5) *Development Services Criteria:* To be certified as a CDFI, an entity must provide Development Services in conjunction with its Financial Products, either directly or through an Affiliate, or through contract with another provider (12 CFR 1805.201(b)(4)).

(a) What minimum level of Development Services should be expected of a CDFI (i.e. is one-on-one counseling enough or should training be more formal/standardized?)?

(b) Should the CDFI Fund require an entity to provide Development Services that are linked to each Financial Product that it offers?

(c) Should Development Services include broad efforts to increase financial education and literacy within an entity's Target Market?

(6) *Non-Governmental Entity Criteria:* To be certified as a CDFI, an entity cannot be an agency or instrumentality of the United States, or any State or political subdivision thereof. An entity that is created by, or that receives substantial assistance from, one or more government entities may be a CDFI provided it is not controlled by such entities and maintains independent decision-making power over its activities (12 CFR 1805.201(b)(6)).

(a) What minimal levels of government support for an entity's operations (e.g., funding and capitalization) or government involvement in an entity's lending or investment decisions (e.g., underwriting criteria or loan approval) should be considered acceptable for certification?

(b) Should governmental ''operations support'' and government ''involvement in lending and investment decisions'' be considered separately or should evidence of both be required in order to deem an entity as having failed to satisfy the non-governmental entity criteria?

(7) *CDFI Certification Application Process:*

(a) Should an electronic, web-based CDFI certification application process be implemented and, if so, should paper applications continue to be accepted?

(b) (i) Should CDFI certification status extend for a fixed period of time before it expires? If so, is three (3) years an appropriate duration?

(ii) Should CDFI certification be continued indefinitely if the certified CDFI does not request an award from the CDFI Fund?

(iii) Is there any policy justification to designate different certification periods for different types of organizations? If so, how long should certification periods be for specific types of organizations?

(c) What should be the primary components of a recertification process?

(8) *General:* What other changes could the CDFI Fund make to improve the CDFI certification process that has not been addressed in the preceding questions?

Authority: 12 U.S.C. 4703, 4703 note, 4704, 4706, 4707, 4717; 12 CFR part 1805.

Dated: January 28, 2008.

Donna J. Gambrell,

Director, Community Development Financial Institutions Fund.

[FR Doc. E8–2008 Filed 2–1–08; 8:45 am]

BILLING CODE 4810–70–P

DEPARTMENT OF THE TREASURY

Internal Revenue Service

[IA–62–91]

Proposed Collection; Comment Request for Regulation Project

AGENCY: Internal Revenue Service (IRS), Treasury.

ACTION: Notice and request for comments.

SUMMARY: The Department of the Treasury, as part of its continuing effort to reduce paperwork and respondent burden, invites the general public and other Federal agencies to take this opportunity to comment on proposed and/or continuing information collections, as required by the Paperwork Reduction Act of 1995, Public Law 104–13 (44 U.S.C. 3506(c)(2)(A)). Currently, the IRS is soliciting comments concerning an existing final and temporary regulations, IA–62–91 (TD 8482), Capitalization and Inclusion in Inventory of Certain Costs (§§ 1.263A–2 and 1.263A–3).

DATES: Written comments should be received on or before April 4, 2008 to be assured of consideration.

ADDRESSES: Direct all written comments to Glenn P. Kirkland, Internal Revenue Service, room 6129, 1111 Constitution Avenue, NW., Washington, DC 20224.

FOR FURTHER INFORMATION CONTACT: Requests for additional information or copies of the regulations should be directed to Carolyn N. Brown at Internal Revenue Service, room 6129, 1111 Constitution Avenue, NW., Washington, DC 20224, or at (202) 622–6688, or through the internet at *(Carolyn.N.Brown@irs.gov).*

SUPPLEMENTARY INFORMATION:

Title: Capitalization and Inclusion in Inventory of Certain Costs.

OMB Number: 1545–0987.

Regulation Project Number: IA–62–91.

Abstract: The requirements are necessary to determine whether taxpayers comply with the cost allocation rules of Internal Revenue Code section 263A and with the requirements for changing their methods of accounting. The information will be used to verify taxpayers' changes in method of accounting.

Current Actions: There is no change to this existing regulation.

Type of Review: Extension of OMB approval.

Affected Public: Business or other for-profit organizations and farms.

Estimated Number of Respondents: 20,000.

Estimated Average Time per Respondent: The estimated annual reporting and recordkeeping burden per respondent varies from 1 hour to 9 hours.

Estimated Total Annual Burden Hours: 100,000.

The following paragraph applies to all the collections of information covered by this notice.

The following paragraph applies to all of the collections of information covered by this notice:

An agency may not conduct or sponsor, and a person is not required to respond to, a collection of information unless the collection of information displays a valid OMB control number.

Books or records relating to a collection of information must be retained as long as their contents may become material in the administration of any internal revenue law. Generally, tax returns and tax return information are confidential, as required by 26 U.S.C. 6103.

Request for Comments: Comments submitted in response to this notice will be summarized and/or included in the request for OMB approval. All comments will become a matter of public record. Comments are invited on: (a) Whether the collection of information is necessary for the proper performance of the functions of the agency, including whether the information shall have practical utility; (b) the accuracy of the agency's estimate of the burden of the collection of information; (c) ways to enhance the quality, utility, and clarity of the information to be collected; (d) ways to minimize the burden of the collection of information on respondents, including through the use of automated collection techniques or other forms of information technology; and (e) estimates of capital or start-up costs and costs of operation, maintenance, and purchase of services to provide information.

Approved: January 25, 2008.

Glenn P. Kirkland,

IRS Reports Clearance Officer.

[FR Doc. E8–2006 Filed 2–1–08; 8:45 am]

BILLING CODE 4830–01–P

DEPARTMENT OF THE TREASURY

Internal Revenue Service

[REG–208156–91]

Proposed Collection; Comment Request for Regulation Project

AGENCY: Internal Revenue Service (IRS), Treasury.

ACTION: Notice and request for comments.

SUMMARY: The Department of the Treasury, as part of its continuing effort to reduce paperwork and respondent burden, invites the general public and other Federal agencies to take this opportunity to comment on proposed and/or continuing information collections, as required by the Paperwork Reduction Act of 1995, Public Law 104–13 (44 U.S.C. 3506(c)(2)(A)). Currently, the IRS is soliciting comments concerning existing final regulations, REG–208156–91 (TD 8929), Accounting for Long-Term Contracts (§ 1.460–1).

DATES: Written comments should be received on or before April 4, 2008 to be assured of consideration.

ADDRESSES: Direct all written comments to Glenn P. Kirkland, Internal Revenue Service, room 6129, 1111 Constitution Avenue, NW., Washington, DC 20224.

FOR FURTHER INFORMATION CONTACT: Requests for additional information or copies of the regulations should be directed to Carolyn N. Brown at Internal Revenue Service, room 6129, 1111 Constitution Avenue, NW., Washington, DC 20224, or at (202) 622–6688, or through the internet at (*Carolyn.N.Brown@irs.gov*).

SUPPLEMENTARY INFORMATION:

Title: Accounting for Long-Term Contracts.

OMB Number: 1545–1650.

Regulation Project Number: REG–208156–91.

Abstract: The regulation requires the Commissioner to be notified of a taxpayer's decision to sever or aggregate one or more long-term contracts under the regulations. The statement is needed so the Commissioner can determine whether the taxpayer properly severed or aggregated its contract(s). The regulations affect any taxpayer that manufactures or constructs property under long-term contracts.

Current Actions: There are no changes to these existing regulations.

Type of Review: Extension of a currently approved collection.

Affected Public: Business or other for-profit organizations.

Estimated Number of Respondents: 50,000.

Estimated Time per Respondent: 15 minutes.

Estimated Total Annual Burden Hours: 12,500.

The following paragraph applies to all of the collections of information covered by this notice:

An agency may not conduct or sponsor, and a person is not required to respond to, a collection of information unless the collection of information displays a valid OMB control number. Books or records relating to a collection of information must be retained as long as their contents may become material in the administration of any internal revenue law. Generally, tax returns and tax return information are confidential, as required by 26 U.S.C. 6103.

Request for Comments: Comments submitted in response to this notice will be summarized and/or included in the request for OMB approval. All comments will become a matter of public record. Comments are invited on: (a) Whether the collection of information is necessary for the proper performance of the functions of the agency, including whether the information shall have practical utility; (b) the accuracy of the agency's estimate of the burden of the collection of information; (c) ways to enhance the quality, utility, and clarity of the information to be collected; (d) ways to minimize the burden of the collection of information on respondents, including through the use of automated collection techniques or other forms of information technology; and (e) estimates of capital or start-up costs and costs of operation, maintenance, and purchase of services to provide information.

Approved: January 25, 2008.

Glenn P. Kirkland,

IRS Reports Clearance Officer.

[FR Doc. E8–2009 Filed 2–1–08; 8:45 am]

BILLING CODE 4830–01–P

DEPARTMENT OF THE TREASURY

Internal Revenue Service

Proposed Collection; Comment Request for Form 1028

AGENCY: Internal Revenue Service (IRS), Treasury.

ACTION: Notice and request for comments.

SUMMARY: The Department of the Treasury, as part of its continuing effort to reduce paperwork and respondent burden, invites the general public and other Federal agencies to take this opportunity to comment on proposed and/or continuing information

collections, as required by the Paperwork Reduction Act of 1995, Public Law 104–13 (44 U.S.C. 3506(c)(2)(A)). Currently, the IRS is soliciting comments concerning Form 1028, Application for Recognition of Exemption Under Section 521 of the Internal Revenue Code.

DATES: Written comments should be received on or before April 4, 2008 to be assured of consideration.

ADDRESSES: Direct all written comments to Glenn P. Kirkland, Internal Revenue Service, room 6129, 1111 Constitution Avenue, NW., Washington, DC 20224.

FOR FURTHER INFORMATION CONTACT: Requests for additional information or copies of the form and instructions should be directed to R. Joseph Durbala at the Internal Revenue Service, room 6129, 1111 Constitution Avenue, NW., Washington, DC 20224, or at (202) 622–3634, or through the internet at *RJoseph.Durbala@irs.gov*.

SUPPLEMENTARY INFORMATION:

Title: Application for Recognition of Exemption Under Section 521 of the Internal Revenue Code.

OMB Number: 1545–0058.

Form Number: 1028.

Abstract: Farmers' cooperatives must file Form 1028 to apply for exemption from Federal income tax as being organizations described in Internal Revenue Code section 521. The information on Form 1028 provides the basis for determining whether the applicants are exempt.

Current Actions: There are no changes being made to the form at this time.

Type of Review: Extension of a currently approved collection.

Affected Public: Business or other for-profit organizations.

Estimated Number of Respondents: 50.

Estimated Time per Respondent: 50 hours, 54 minutes.

Estimated Total Annual Burden Hours: 2,545.

The following paragraph applies to all of the collections of information covered by this notice:

An agency may not conduct or sponsor, and a person is not required to respond to, a collection of information unless the collection of information displays a valid OMB control number. Books or records relating to a collection of information must be retained as long as their contents may become material in the administration of any internal revenue law. Generally, tax returns and tax return information are confidential, as required by 26 U.S.C. 6103.

Request for Comments: Comments submitted in response to this notice will be summarized and/or included in the request for OMB approval. All comments will become a matter of public record. Comments are invited on: (a) Whether the collection of information is necessary for the proper performance of the functions of the agency, including whether the information shall have practical utility; (b) the accuracy of the agency's estimate of the burden of the collection of information; (c) ways to enhance the quality, utility, and clarity of the information to be collected; (d) ways to minimize the burden of the collection of information on respondents, including through the use of automated collection techniques or other forms of information technology; and (e) estimates of capital or start-up costs and costs of operation, maintenance, and purchase of services to provide information.

Approved: January 25, 2008.

Glenn P. Kirkland,

IRS Reports Clearance Officer.

[FR Doc. E8–2012 Filed 2–1–08; 8:45 am]

BILLING CODE 4830–01–P

DEPARTMENT OF THE TREASURY

Internal Revenue Service

[TD 9328]

Proposed Collection; Comment Request for Regulation Project

AGENCY: Internal Revenue Service (IRS), Treasury.

ACTION: Notice and request for comments.

SUMMARY: The Department of the Treasury, as part of its continuing effort to reduce paperwork and respondent burden, invites the general public and other Federal agencies to take this opportunity to comment on proposed and/or continuing information collections, as required by the Paperwork Reduction Act of 1995, Public Law 104–13 (44 U.S.C. 3506(c)(2)(A)). Currently, the IRS is soliciting comments concerning an existing final regulation, TD 9328, Safe Harbor for Valuation Under Section 475.

DATES: Written comments should be received on or before April 4, 2008, to be assured of consideration.

ADDRESSES: Direct all written comments to Glenn P. Kirkland, Internal Revenue Service, Room 6129, 1111 Constitution Avenue NW., Washington, DC 20224.

FOR FURTHER INFORMATION CONTACT: Requests for additional information or copies of the regulations should be directed to R. Joseph Durbala, at Internal Revenue Service, Room 6129, 1111 Constitution Avenue NW., Washington, DC 20224, or at (202) 622–3634, or through the Internet at *RJoseph.Durbala@irs.gov.*

SUPPLEMENTARY INFORMATION:

Title: Safe Harbor for Valuation Under Section 475.

OMB Number: 1545–1945.

Regulation Project Number: TD 9328.

Abstract: This document sets forth an elective safe harbor that permits dealers in securities and dealers in commodities to elect to use the values of positions reported on certain financial statements as the fair market values of those positions for purposes of section 475 of the Internal Revenue Code (Code). This safe harbor is intended to reduce the compliance burden on taxpayers and to improve the administrability of the valuation requirement of section 475 for the IRS.

Current Actions: There is no change to this existing regulation.

Type of Review: Extension of currently approved collection.

Affected Public: Business or other for-profit organizations.

Estimated Number of Respondents: 12,308.

Estimated Average Time per Respondent: 4 hours.

Estimated Total Annual Burden Hours: 49,232.

The following paragraph applies to all of the collections of information covered by this notice:

An agency may not conduct or sponsor, and a person is not required to respond to, a collection of information unless the collection of information displays a valid OMB control number. Books or records relating to a collection of information must be retained as long as their contents may become material in the administration of any internal revenue law. Generally, tax returns and tax return information are confidential, as required by 26 U.S.C. 6103.

Request for Comments: Comments submitted in response to this notice will be summarized and/or included in the request for OMB approval. All comments will become a matter of public record. Comments are invited on: (a) Whether the collection of information is necessary for the proper performance of the functions of the agency, including whether the information shall have practical utility; (b) the accuracy of the agency's estimate of the burden of the collection of information; (c) ways to enhance the quality, utility, and clarity of the information to be collected; (d) ways to minimize the burden of the collection of information on respondents, including through the use of automated collection techniques or other forms of information

technology; and (e) estimates of capital or start-up costs and costs of operation, maintenance, and purchase of services to provide information.

Approved: January 24, 2008.

Glenn P. Kirkland,

IRS Reports Clearance Officer.

[FR Doc. E8–2017 Filed 2–1–08; 8:45 am]

BILLING CODE 4830–01–P

DEPARTMENT OF THE TREASURY

Internal Revenue Service

Proposed Collection; Comment Request for Form CT–1

AGENCY: Internal Revenue Service (IRS), Treasury.

ACTION: Notice and request for comments.

SUMMARY: The Department of the Treasury, as part of its continuing effort to reduce paperwork and respondent burden, invites the general public and other Federal agencies to take this opportunity to comment on proposed and/or continuing information collections, as required by the Paperwork Reduction Act of 1995, Public Law 104–13 (44 U.S.C. 3506(c)(2)(A)). Currently, the IRS is soliciting comments concerning Form CT–1, Employer's Annual Railroad Retirement Tax Return.

DATES: Written comments should be received on or before April 4, 2008, to be assured of consideration.

ADDRESSES: Direct all written comments to Glenn P. Kirkland, Internal Revenue Service, Room 6129, 1111 Constitution Avenue, NW., Washington, DC 20224.

FOR FURTHER INFORMATION CONTACT: Requests for additional information or copies of the form and instructions should be directed to R. Joseph Durbala, (202) 622–3634, Internal Revenue Service, room 6129, 1111 Constitution Avenue, NW., Washington, DC 20224, or through the Internet at *RJoseph.Durbala@irs.gov.*

SUPPLEMENTARY INFORMATION:

Title: Employer's Annual Railroad Retirement Tax Return.

OMB Number: 1545–0001.

Form Number: Form CT–1.

Abstract: Railroad employers are required to file an annual return to report employer and employee Railroad Retirement Tax Act (RRTA) taxes. Form CT–1 is used for this purpose. The IRS uses the information to insure that the employer has paid the correct tax.

Current Actions: There are no changes being made to the form at this time.

Type of Review: Extension of a currently approved collection.

Affected Public: Businesses or other for-profit organizations, not-for-profit institutions, and state, local or tribal governments.

Estimated Number of Respondents: 2,817.

Estimated Time per Respondent: 21 hours, 19 minutes.

Estimated Total Annual Burden Hours: 46,359.

The following paragraph applies to all of the collections of information covered by this notice:

An agency may not conduct or sponsor, and a person is not required to respond to, a collection of information unless the collection of information displays a valid OMB control number.

Books or records relating to a collection of information must be retained as long as their contents may become material in the administration of any internal revenue law. Generally, tax returns and tax return information are confidential, as required by 26 U.S.C. 6103.

Request for Comments: Comments submitted in response to this notice will be summarized and/or included in the request for OMB approval. All comments will become a matter of public record. Comments are invited on: (a) Whether the collection of information is necessary for the proper performance of the functions of the agency, including whether the information shall have practical utility; (b) the accuracy of the agency's estimate of the burden of the collection of information; (c) ways to enhance the quality, utility, and clarity of the information to be collected; (d) ways to minimize the burden of the collection of information on respondents, including through the use of automated collection techniques or other forms of information technology; and (e) estimates of capital or start-up costs and costs of operation, maintenance, and purchase of services to provide information.

Approved: January 25, 2008.

Glenn P. Kirkland,

IRS Reports Clearance Officer.

[FR Doc. E8–2018 Filed 2–1–08; 8:45 am]

BILLING CODE 4830–01–P

DEPARTMENT OF THE TREASURY

Internal Revenue Service

[LR–218–78]

Proposed Collection; Comment Request for Regulation Project

AGENCY: Internal Revenue Service (IRS), Treasury.

ACTION: Notice and request for comments.

SUMMARY: The Department of the Treasury, as part of its continuing effort to reduce paperwork and respondent burden, invites the general public and other Federal agencies to take this opportunity to comment on proposed and/or continuing information collections, as required by the Paperwork Reduction Act of 1995, Public Law 104–13 (44 U.S.C. 3506(c)(2)(A)). Currently, the IRS is soliciting comments concerning an existing final regulation, LR–218–78 (TD 8096), Product Liability Losses and Accumulations for Product Liability Losses (Section 1.172–13).

DATES: Written comments should be received on or before April 4, 2008, to be assured of consideration.

ADDRESSES: Direct all written comments to Glenn P. Kirkland, Internal Revenue Service, Room 6129, 1111 Constitution Avenue, NW., Washington, DC 20224.

FOR FURTHER INFORMATION CONTACT: Requests for additional information or copies of the regulations should be directed to R. Joseph Durbala, at Internal Revenue Service, Room 6129, 1111 Constitution Avenue, NW., Washington, DC 20224, or at (202) 622–3634, or through the Internet at *RJoseph.Durbala@irs.gov.*

SUPPLEMENTARY INFORMATION:

Title: Product Liability Losses and Accumulations for Product Liability Losses.

OMB Number: 1545–0863. Regulation Project Number: LR–218–78 (TD 8096).

Abstract: Generally, a taxpayer who sustains a product liability loss must carry the loss back 10 years. However, a taxpayer may elect to have such loss treated as a regular net operating loss under section 172. The election is made by attaching a statement to the tax return. This statement will enable the IRS to monitor compliance with the statutory requirements.

Current Actions: There is no change to this existing regulation.

Type of Review: Extension of currently approved collection.

Affected Public: Business or other for-profit organizations.

Estimated Number of Respondents: 5,000.

Estimated Average Time per Respondent: 30 minutes.

Estimated Total Annual Burden Hours: 2,500.

The following paragraph applies to all of the collections of information covered by this notice:

An agency may not conduct or sponsor, and a person is not required to

respond to, a collection of information unless the collection of information displays a valid OMB control number. Books or records relating to a collection of information must be retained as long as their contents may become material in the administration of any internal revenue law. Generally, tax returns and tax return information are confidential, as required by 26 U.S.C. 6103.

Request for Comments: Comments submitted in response to this notice will be summarized and/or included in the request for OMB approval. All comments will become a matter of public record. Comments are invited on: (a) Whether the collection of information is necessary for the proper performance of the functions of the agency, including whether the information shall have practical utility; (b) the accuracy of the agency's estimate of the burden of the collection of information; (c) ways to enhance the quality, utility, and clarity of the information to be collected; (d) ways to minimize the burden of the collection of information on respondents, including through the use of automated collection techniques or other forms of information technology; and (e) estimates of capital or start-up costs and costs of operation, maintenance, and purchase of services to provide information.

Approved: January 24, 2008.

Glenn P. Kirkland,

IRS Reports Clearance Officer.

[FR Doc. E8–2019 Filed 2–1–08; 8:45 am]

BILLING CODE 4830–01–P

DEPARTMENT OF THE TREASURY

Internal Revenue Service

Proposed Collection; Comment Request for Revenue Procedure 2001–21

AGENCY: Internal Revenue Service (IRS), Treasury.

ACTION: Notice and request for comments.

SUMMARY: The Department of the Treasury, as part of its continuing effort to reduce paperwork and respondent burden, invites the general public and other Federal agencies to take this opportunity to comment on proposed and/or continuing information collections, as required by the Paperwork Reduction Act of 1995, Public Law 104–13 (44 U.S.C. 3506(c)(2)(A)). Currently, the IRS is soliciting comments concerning Revenue Procedure 2001–21, Debt Roll-Ups.

DATES: Written comments should be received on or before April 4, 2008, to be assured of consideration.

ADDRESSES: Direct all written comments to Glenn P. Kirkland, Internal Revenue Service, Room 6129, 1111 Constitution Avenue, NW., Washington, DC 20224.

FOR FURTHER INFORMATION CONTACT: Requests for additional information or copies of the regulations should be directed to R. Joseph Durbala at Internal Revenue Service, Room 6129, 1111 Constitution Avenue, NW., Washington, DC 20224, or at (202) 622–3634, or through the internet at *RJoseph.Durbala@irs.gov.*

SUPPLEMENTARY INFORMATION:

Title: Debt Roll-Ups.

OMB Number: 1545–1647.

Revenue Procedure Number: Revenue Procedure 2001–21.

Abstract: Revenue Procedure 2001–21 provides for an election that will facilitate the consolidation of two or more outstanding debt instruments into a single debt instrument. Under the election, taxpayers can treat certain exchanges of debt instruments as realization events for federal income tax purposes even though the exchanges do not result in significant medications under section 1.1001–3 of the Income Tax Regulations.

Current Actions: There are no changes to the paperwork burden relating to this revenue procedure at this time.

Type of Review: Extension of a currently approved collection.

Affected Public: Business or other for-profit organizations.

Estimated Number of Respondents: 100.

Estimated Time per Respondent: 45 minutes.

Estimated Total Annual Burden Hours: 75.

The burden for the collection of information is reflected in the burden of Form 4868, Application for Automatic Extension of Time to File U.S. Individual Tax Return.

The following paragraph applies to all the collections of information covered by this notice:

An agency may not conduct or sponsor, and a person is not required to respond to, a collection of information unless the collection of information displays a valid OMB control number. Books or records relating to a collection of information must be retained as long as their contents may become material in the administration of any internal revenue law. Generally, tax returns and tax return information are confidential, as required by 26 U.S.C. 6103.

Request for Comments: Comments submitted in response to this notice will be summarized and/or included in the request for OMB approval. All comments will become a matter of public record. Comments are invited on: (a) Whether the collection of information is necessary for the proper performance of the functions of the agency, including whether the information shall have practical utility; (b) the accuracy of the agency's estimate of the burden of the collection of information; (c) ways to enhance the quality, utility, and clarity of the information to be collected; (d) ways to minimize the burden of the collection of information on respondents, including through the use of automated collection techniques or other forms of information technology; and (e) estimates of capital or start-up costs and costs of operation, maintenance, and purchase of services to provide information.

Approved: January 24, 2008.

Glenn P. Kirkland,

IRS Reports Clearance Officer.

[FR Doc. E8–2021 Filed 2–1–08; 8:45 am]

BILLING CODE 4830–01–P

DEPARTMENT OF THE TREASURY

Internal Revenue Service

Proposed Collection; Comment Request for Form 5713 and Schedules A, B, and C (Form 5713)

AGENCY: Internal Revenue Service (IRS), Treasury.

ACTION: Notice and request for comments.

SUMMARY: The Department of the Treasury, as part of its continuing effort to reduce paperwork and respondent burden, invites the general public and other Federal agencies to take this opportunity to comment on proposed and/or continuing information collections, as required by the Paperwork Reduction Act of 1995, Public Law 104–13 (44 U.S.C. 3506(c)(2)(A)). Currently, the IRS is soliciting comments concerning Form 5713, Specifically Attributable Taxes and Income (Section 999(c)(2)), and the attached Schedules A, B, and C (Form 5713).

DATES: Written comments should be received on or before April 4, 2008, to be assured of consideration.

ADDRESSES: Direct all written comments to Glenn P. Kirkland, Internal Revenue Service, Room 6129, 1111 Constitution Avenue, NW., Washington, DC 20224.

FOR FURTHER INFORMATION CONTACT: Requests for additional information or copies of the form and instructions

should be directed to R. Joseph Durbala at Internal Revenue Service, Room 6129, 1111 Constitution Avenue, NW., Washington, DC 20224, or at (202) 622–3634, or through the internet at *RJoseph.Durbala@irs.gov.*

SUPPLEMENTARY INFORMATION:

Title: International Boycott Report.

OMB Number: 1545–0216.

Form Number: 5713, and Schedules A, B, and C (Form 5713).

Abstract: Form 5713 and related Schedules A, B, and C are used by any entity that has operations in a ''boycotting'' country. If that entity cooperates with or participates in an international boycott, it may lose a portion of the following benefits: the foreign tax credit, deferral of income of a controlled foreign corporation, deferral of income of a domestic international sales corporation, or deferral of income of a foreign sales corporation. The IRS uses Form 5713 to determine if any of these benefits should be lost. The information is also used as the basis for a report to the Congress.

Current Actions: There are no changes being made to the form at this time.

Type of Review: Extension of a currently approved collection.

Affected Public: Business or other for-profit organizations, and individuals.

Estimated Number of Respondents: 3,875.

Estimated Time per Respondent: 26 hours, 54 minutes.

Estimated Total Annual Burden Hours: 104,236.

The following paragraph applies to all of the collections of information covered by this notice:

An agency may not conduct or sponsor, and a person is not required to respond to, a collection of information unless the collection of information displays a valid OMB control number. Books or records relating to a collection of information must be retained as long as their contents may become material in the administration of any internal revenue law. Generally, tax returns and tax return information are confidential, as required by 26 U.S.C. 6103.

Request for Comments: Comments submitted in response to this notice will be summarized and/or included in the request for OMB approval. All comments will become a matter of public record. Comments are invited on: (a) Whether the collection of information is necessary for the proper performance of the functions of the agency, including whether the information shall have practical utility; (b) the accuracy of the agency's estimate of the burden of the collection of information; (c) ways to enhance the quality, utility, and clarity of the information to be collected; (d) ways to minimize the burden of the collection of information on respondents, including through the use of automated collection techniques or other forms of information technology; and (e) estimates of capital or start-up costs and costs of operation, maintenance, and purchase of services to provide information.

Approved: January 25, 2008.

Glenn Kirkland,

IRS Reports Clearance Officer.

[FR Doc. E8–2022 Filed 2–1–08; 8:45 am]

BILLING CODE 4830–01–P

DEPARTMENT OF THE TREASURY

Internal Revenue Service

Open Meeting of the Area 3 Taxpayer Advocacy Panel (including the States of Florida, Georgia, Alabama, Mississippi, Louisiana, Arkansas, and the Territory of Puerto Rico)

AGENCY: Internal Revenue Service (IRS), Treasury.

ACTION: Correction to notice of meeting.

SUMMARY: An open meeting of the Area 3 Taxpayer Advocacy Panel will be conducted. The Taxpayer Advocacy Panel is soliciting public comment, ideas, and suggestions on improving customer service at the Internal Revenue Service.

DATES: The meeting will be held Thursday, February 28, 2008, 1 to 5 p.m., Friday, February 29, 2008, 8 a.m. to 5 p.m., and Saturday, March 1, 2008, 8 a.m. to Noon Eastern Time.

FOR FURTHER INFORMATION CONTACT: Sallie Chavez at 1–888–912–1227, or (954) 423–7979.

SUPPLEMENTARY INFORMATION: Notice is hereby given pursuant to Section 10(a)(2) of the Federal Advisory Committee Act, 5 U.S.C. App. (1988) that a meeting of the Area 3 Taxpayer Advocacy Panel will be held Thursday, February 28, 2008, 1 to 5 p.m., Friday, February 29, 2008, 8 a.m. to 5 p.m., and Saturday, March 1, 2008, 8 a.m. to Noon Eastern Time, at the Holiday Inn—International Drive Resort, 6515 International Drive, Orlando, Florida. You can submit written comments to the panel by faxing the comments to (954) 423–7975, or by mail to Taxpayer Advocacy Panel, Room 340, 1000 South Pine Island Road, Plantation, FL 33324, or you can contact us at *http://www.improveirs.org.* This meeting is not required to be open to the public, but because we are always interested in community input we will accept public comments. Please contact Sallie Chavez at 1–888–912–1227 or (954) 423–7979 for more information.

The agenda will include the following: Various IRS issues.

Dated: January 23, 2008.

Richard Morris,

Acting Director, Taxpayer Advocacy Panel.

[FR Doc. E8–2014 Filed 2–1–08; 8:45 am]

BILLING CODE 4830–01–P

Federal Register

Monday,
February 4, 2008

Part II

The President

Presidential Determination No. 2008–8 of January 22, 2008—Determination on the Proposed Agreement for Cooperation Between the United States of America and the Republic of Turkey Concerning Peaceful Uses of Nuclear Energy

Presidential Determination No. 2008–10 of January 29, 2008—Unexpected Urgent Refugee and Migration Needs Related to Africa and the Middle East

Federal Register
Vol. 73, No. 23
Monday, February 4, 2008

Presidential Documents

Title 3—

The President

Presidential Determination No. 2008–8 of January 22, 2008

Determination on the Proposed Agreement for Cooperation Between the United States of America and the Republic of Turkey Concerning Peaceful Uses of Nuclear Energy

Memorandum for the Secretary of State [and] the Secretary of Energy

I have considered the proposed Agreement for Cooperation Between the United States of America and the Republic of Turkey Concerning Peaceful Uses of Nuclear Energy, signed at Ankara on July 26, 2000, along with the views, recommendations, and statements of interested agencies.

I approve the proposed Agreement and have determined the performance of the Agreement will promote, and will not constitute an unreasonable risk to, the common defense and security.

The Secretary of State is authorized to publish this determination in the **Federal Register**.

THE WHITE HOUSE,
Washington, January 22, 2008.

[FR Doc. 08–494
Filed 2–1–08; 8:58 am]
Billing code 4710–10–P

Presidential Documents

Presidential Determination No. 2008–10 of January 29, 2008

Unexpected Urgent Refugee and Migration Needs Related to Africa and the Middle East

Memorandum for the Secretary of State

By the authority vested in me by the Constitution and the laws of the United States, including sections 2 and 4(a)(1) of the Migration and Refugee Assistance Act of 1962 (the ''Act''), as amended (22 U.S.C. 2601 and 2603), and section 301 of title 3, United States Code:

(1) I hereby determine, pursuant to 2(c)(1) of the Act, that it is important to the national interest to furnish assistance under the Act in an amount not to exceed $32 million from the United States Emergency Refugee and Migration Assistance Fund for the purpose of meeting unexpected and urgent refugee and migration needs, including by contributions to international, governmental, and nongovernmental organizations and payment of administrative expenses of the Bureau of Population, Refugees, and Migration of the Department of State, related to humanitarian needs in Africa and in the West Bank and Gaza; and

(2) the functions of the President in relation to this memorandum under 2(d) of the Act, and of establishing terms and conditions under section 2(c)(1) of the Act, are assigned to you.

You are authorized and directed to publish this memorandum in the **Federal Register**.

THE WHITE HOUSE,

Washington, January 29, 2008.

[FR Doc. 08–495

Filed 2–1–08; 8:58 am]

Billing code 4710–10–P

Reader Aids

Federal Register

Vol. 73, No. 23

Monday, February 4, 2008

CUSTOMER SERVICE AND INFORMATION

Federal Register/Code of Federal Regulations	
General Information, indexes and other finding aids	**202–741–6000**
Laws	**741–6000**
Presidential Documents	
Executive orders and proclamations	**741–6000**
The United States Government Manual	**741–6000**
Other Services	
Electronic and on-line services (voice)	**741–6020**
Privacy Act Compilation	**741–6064**
Public Laws Update Service (numbers, dates, etc.)	**741–6043**
TTY for the deaf-and-hard-of-hearing	**741–6086**

ELECTRONIC RESEARCH

World Wide Web

Full text of the daily Federal Register, CFR and other publications is located at: **http://www.gpoaccess.gov/nara/index.html**

Federal Register information and research tools, including Public Inspection List, indexes, and links to GPO Access are located at: **http://www.archives.gov/federal_register**

E-mail

FEDREGTOC-L (Federal Register Table of Contents LISTSERV) is an open e-mail service that provides subscribers with a digital form of the Federal Register Table of Contents. The digital form of the Federal Register Table of Contents includes HTML and PDF links to the full text of each document.

To join or leave, go to **http://listserv.access.gpo.gov** and select *Online mailing list archives, FEDREGTOC-L, Join or leave the list (or change settings);* then follow the instructions.

PENS (Public Law Electronic Notification Service) is an e-mail service that notifies subscribers of recently enacted laws.

To subscribe, go to **http://listserv.gsa.gov/archives/publaws-l.html** and select *Join or leave the list (or change settings);* then follow the instructions.

FEDREGTOC-L and **PENS** are mailing lists only. We cannot respond to specific inquiries.

Reference questions. Send questions and comments about the Federal Register system to: **fedreg.info@nara.gov**

The Federal Register staff cannot interpret specific documents or regulations.

FEDERAL REGISTER PAGES AND DATE, FEBRUARY

6007–6418 1
6419–6570 4

CFR PARTS AFFECTED DURING FEBRUARY

At the end of each month, the Office of the Federal Register publishes separately a List of CFR Sections Affected (LSA), which lists parts and sections affected by documents published since the revision date of each title.

3 CFR

Executive Orders:
13457 6415

Administrative Orders:
Presidential Determinations:
No. 2008–8 of January 22, 2008 6567
No. 2008–10 of January 29, 2008 6569

9 CFR

78 6007

14 CFR

39 .....6008, 6419
71 .....6424, 6425

Proposed Rules:
71 .....6056, 6057, 6058, 6060

17 CFR

202 6011
230 6011
240 6011
260 6011
270 6011

19 CFR

Proposed Rules:
4 6061
12 6061
18 6061
101 6061
103 6061
113 6061
122 6061
123 6061
141 6061
143 6061
149 6061
192 6061

21 CFR

347 6014
522 6017
558 6018

25 CFR

502 6019
522 6019
559 6019
573 6019

28 CFR

Proposed Rules:
58 .....6062, 6447

30 CFR

Proposed Rules:
256 6073

36 CFR

1253 6030

Proposed Rules:
1190 6080
1191 6080

38 CFR

36 6294

39 CFR

20 6031
111 .....6032, 6033
3020 6426

Proposed Rules:
3001 6081

40 CFR

52 .....6034, 6427
97 6034

Proposed Rules:
52 6451

42 CFR

Proposed Rules:
400 6451
405 6451
410 6451
412 6451
413 6451
414 6451
488 6451
494 6451

43 CFR

3130 6430

46 CFR

Proposed Rules:
401 6085

47 CFR

64 .....6041, 6444
76 6043

Proposed Rules:
76 6099

49 CFR

223 6370
238 6370

50 CFR

679 6055

Proposed Rules:
665 6101

REMINDERS

The items in this list were editorially compiled as an aid to Federal Register users. Inclusion or exclusion from this list has no legal significance.

RULES GOING INTO EFFECT FEBRUARY 4, 2008

AGRICULTURE DEPARTMENT

Food and Nutrition Service

Child nutrition programs:
- Women, infants, and children special supplemental nutrition programs—
  - Food packages; revisions; published 12-6-07

COMMERCE DEPARTMENT

National Oceanic and Atmospheric Administration

Fisheries of the Caribbean, Gulf of Mexico, and South Atlantic:
- Gulf of Mexico Vermilion Snapper Fishery Management Measures; published 1-3-08

Fishery conservation and management:
- West Coast States and Western Pacific fisheries—
  - Pacific Coast groundfish; published 12-7-07

ENERGY DEPARTMENT

Federal Energy Regulatory Commission

Transparency Provisions of Section 23 of the Natural Gas Act; published 1-4-08

ENVIRONMENTAL PROTECTION AGENCY

Air quality implementation plans; approval and promulgation; various States:
- Minnesota; published 12-5-07
- Missouri; published 12-4-07

FEDERAL COMMUNICATIONS COMMISSION

Implementation of the Subscriber Carrier Selection Changes Provisions of the Telecommunications Act of 1996:
- Policies and Rules Concerning Unauthorized Changes of Consumers Long Distance Carriers—
  - LEC Coalition Application for Review Regarding Carrier Change Rules; published 2-4-08

HOMELAND SECURITY DEPARTMENT

Coast Guard

Drawbridge Operation Regulations:
- Elizabeth River, Eastern Branch, Norfolk VA; published 1-25-08

SECURITIES AND EXCHANGE COMMISSION

Smaller Reporting Company Regulatory Relief and Simplification; published 1-4-08

COMMENTS DUE NEXT WEEK

AGRICULTURE DEPARTMENT

Agricultural Marketing Service

Spearmint oil produced in Far West; comments due by 2-15-08; published 12-17-07 [FR 07-06075]

COMMERCE DEPARTMENT

National Oceanic and Atmospheric Administration

Fisheries of the Exclusive Economic Zone Off Alaska:
- Shallow-Water Species Fishery by Amendment 80 Vessels Subject to Sideboard Limits in the Gulf of Alaska; comments due by 2-13-08; published 2-1-08 [FR 08-00458]

ENVIRONMENTAL PROTECTION AGENCY

Administrative Cost Recovery Settlement:
- Columbia American Plating Co. Site; comments due by 2-14-08; published 1-15-08 [FR E8-00599]

Air pollutants, hazardous; national emission standards:
- Group I polymers and resins, epoxy resins, non-nylon polyamides, etc.; production; comments due by 2-11-08; published 12-12-07 [FR E7-24076]

Air Quality Implementation Plans; Approval and Promulgation:
- Maryland; NOx and SO2 Emissions Limitations for Fifteen Coal-Fired Electric Generating Units; comments due by 2-11-08; published 1-10-08 [FR E8-00276]

Approval and Promulgation of Air Quality Implementation Plans:
- Indiana; comments due by 2-14-08; published 1-15-08 [FR E8-00440]

Approval and Promulgation of Air Quality Implementation Plans;
- Virginia; comments due by 2-13-08; published 1-14-08 [FR E8-00265]

Approval and Promulgation of Air Quality Implementation Plans:
- Virginia; comments due by 2-13-08; published 1-14-08 [FR E8-00290]
- West Virginia; comments due by 2-13-08; published 1-14-08 [FR E8-00263]

Pesticides; tolerances in food, animal feeds, and raw agricultural commodities:
- Clethodim; comments due by 2-12-08; published 12-14-07 [FR E7-24164]

State Implementation Plans:
- California; comments due by 2-11-08; published 1-10-08 [FR E8-00171]

FEDERAL COMMUNICATIONS COMMISSION

Operation of Wireless Communications Services Operation in the 2.3 GHz Band:
- Digital Audio Radio Satellite Service in the 2310-2360 MHz Frequency Band; comments due by 2-14-08; published 1-15-08 [FR E8-00598]

Radio Broadcasting Services:
- Elko, Nevada; comments due by 2-11-08; published 1-9-08 [FR E8-00205]
- Iola, Texas; comments due by 2-11-08; published 1-9-08 [FR E8-00204]
- Linden, Tennessee; comments due by 2-11-08; published 1-14-08 [FR E8-00458]

FEDERAL DEPOSIT INSURANCE CORPORATION

Fair and Accurate Credit Transactions Act; implementation:
- Fair credit reporting—
  - Information furnished to consumer reporting agencies; accuracy and integrity; enhancement procedures; comments due by 2-11-08; published 12-13-07 [FR E7-23549]

FEDERAL RESERVE SYSTEM

Fair and Accurate Credit Transactions Act; implementation:
- Fair credit reporting—
  - Information furnished to consumer reporting agencies; accuracy and integrity; enhancement procedures; comments due by 2-11-08; published 12-13-07 [FR E7-23549]

FEDERAL TRADE COMMISSION

Fair and Accurate Credit Transactions Act; implementation:
- Fair credit reporting—
  - Information furnished to consumer reporting agencies; accuracy and integrity; enhancement procedures; comments due by 2-11-08; published 12-13-07 [FR E7-23549]

Industry guides:
- Environmental marketing claims use—
  - Meetings; comments due by 2-11-08; published 11-27-07 [FR E7-23007]

HEALTH AND HUMAN SERVICES DEPARTMENT

Food and Drug Administration

Food for human consumption:
- Cheese and related cheese products—
  - Ultrafiltered milk; comments due by 2-11-08; published 12-11-07 [FR E7-23981]
- Food labeling—
  - Alpha-linolenic acid, eicosapentaenoic acid, and docosahexaenoic acid omega-3 fatty acids; nutrient content claims; comments due by 2-11-08; published 11-27-07 [FR E7-22991]

HEALTH AND HUMAN SERVICES DEPARTMENT

Health Resources and Services Administration

Rural Health Grant Program; State Offices; comments due by 2-14-08; published 1-15-08 [FR E8-00551]

HOMELAND SECURITY DEPARTMENT

Federal Emergency Management Agency

Proposed Flood Elevation Determinations; Correction; comments due by 2-15-08; published 1-16-08 [FR E8-00721]

HOMELAND SECURITY DEPARTMENT

Nondiscrimination in Matters Pertaining to Faith-Based Organizations; comments due by 2-13-08; published 1-14-08 [FR E8-00463]

INTERIOR DEPARTMENT

Land Management Bureau

Land resource management:

Rights-of-way—
Linear right-of-way rent schedule; update; comments due by 2-11-08; published 12-11-07 [FR E7-23551]

INTERIOR DEPARTMENT

Fish and Wildlife Service

Endangered and threatened species:
Critical habitat designations—
Salt Creek tiger beetle; comments due by 2-11-08; published 12-12-07 [FR 07-05980]

INTERIOR DEPARTMENT

Surface Mining Reclamation and Enforcement Office

New Mexico Regulatory Program; comments due by 2-11-08; published 1-11-08 [FR E8-00359]

LABOR DEPARTMENT

Employee Benefits Security Administration

Employee Retirement Income Security Act:
Reasonable contract or arrangement; fee disclosure; comments due by 2-11-08; published 12-13-07 [FR E7-24064]

LABOR DEPARTMENT

Apprenticeship programs registration; labor standards; comments due by 2-11-08; published 12-13-07 [FR E7-24178]

LIBRARY OF CONGRESS

Copyright Office, Library of Congress

Copyright office and procedures:
Cable system definition; comments due by 2-11-08; published 12-12-07 [FR E7-24079]

NATIONAL CREDIT UNION ADMINISTRATION

Fair and Accurate Credit Transactions Act; implementation:
Fair credit reporting—
Information furnished to consumer reporting agencies; accuracy and integrity; enhancement procedures; comments due by 2-11-08; published 12-13-07 [FR E7-23549]

OFFICE OF THE DIRECTOR OF NATIONAL INTELLIGENCE

National Intelligence, Office of the Director

Privacy Act Regulations; comments due by 2-11-08; published 1-2-08 [FR E7-25331]

SMALL BUSINESS ADMINISTRATION

Seals and insignia; comments due by 2-11-08; published 1-11-08 [FR E8-00338]

SOCIAL SECURITY ADMINISTRATION

Social security benefits:
Federal old age, survivors, and disability insurance—
Digestive disorders; medical criteria for evaluating functional limitations; comments due by 2-11-08; published 12-12-07 [FR E7-24061]

TRANSPORTATION DEPARTMENT

Federal Aviation Administration

Airworthiness Directives:
Airbus Model A310 Series Airplanes and A300-600 Series Airplanes; comments due by 2-13-08; published 1-14-08 [FR E8-00380]
Airbus Model A318, A319, A320, and A321 Airplanes; comments due by 2-13-08; published 1-14-08 [FR E8-00383]

Airworthiness directives:
Boeing; comments due by 2-15-08; published 12-17-07 [FR E7-24334]

Airworthiness Directives:
Bombardier Model CL 600 2B19 (Regional Jet Series 100 & 440) Airplanes; comments due by 2-11-08; published 1-10-08 [FR E8-00250]
Fokker Model F27 Mark 050 and Model 050 and Model F.28 Mark 0100; comments due by 2-11-08; published 1-10-08 [FR E8-00252]
Saab Model SAAB Fairchild SF340A (SAAB/SF340A) and SAAB 340B Airplanes; comments due by 2-13-08; published 1-14-08 [FR E8-00375]

Airworthiness standards:
Special conditions—
Bell Helicopter Textron Canada Ltd. Model 429 helicopters; comments due by 2-11-08; published 12-28-07 [FR E7-25143]

TRANSPORTATION DEPARTMENT

Federal Motor Carrier Safety Administration

Motor carrier safety standards:
Drivers' hours of service—
On-duty driving time adjustments; comments due by 2-15-08; published 12-17-07 [FR E7-24238]

TREASURY DEPARTMENT

Comptroller of the Currency

Fair and Accurate Credit Transactions Act; implementation:
Fair credit reporting—
Information furnished to consumer reporting agencies; accuracy and integrity; enhancement procedures; comments due by 2-11-08; published 12-13-07 [FR E7-23549]

TREASURY DEPARTMENT

Internal Revenue Service

Income taxes:
Corporate reorganizations and tax-free liquidations; accounting method changes; comments due by 2-14-08; published 11-16-07 [FR E7-22411]
Tax-exempt entities not currently required to file; notification requirement; comments due by 2-13-08; published 11-15-07 [FR E7-22280]

TREASURY DEPARTMENT

Thrift Supervision Office

Fair and Accurate Credit Transactions Act; implementation:
Fair credit reporting—
Information furnished to consumer reporting agencies; accuracy and integrity; enhancement procedures; comments due by 2-11-08; published 12-13-07 [FR E7-23549]

LIST OF PUBLIC LAWS

This is the first in a continuing list of public bills from the current session of Congress which have become Federal laws. It may be used in conjunction with "P L U S" (Public Laws Update Service) on 202–741–6043. This list is also available online at *http://www.archives.gov/federal-register/laws.html*.

A cumulative List of Public Laws for the first session of the 110th Congress will appear in the issue of February 11, 2008.

The text of laws is not published in the **Federal Register** but may be ordered in "slip law" (individual pamphlet) form from the Superintendent of Documents, U.S. Government Printing Office, Washington, DC 20402 (phone, 202–512–1808). The text will also be made available on the Internet from GPO Access at *http://www.gpoaccess.gov/plaws/index.html*. Some laws may not yet be available.

H.R. 4986/P.L. 110–181

National Defense Authorization Act for Fiscal Year 2008 (Jan. 28, 2008; 122 Stat. 3)

Last List January 10, 2008

Public Laws Electronic Notification Service (PENS)

PENS is a free electronic mail notification service of newly enacted public laws. To subscribe, go to *http://listserv.gsa.gov/archives/publaws-l.html*

Note: This service is strictly for E-mail notification of new laws. The text of laws is not available through this service. **PENS** cannot respond to specific inquiries sent to this address.

CFR CHECKLIST

This checklist, prepared by the Office of the Federal Register, is published weekly. It is arranged in the order of CFR titles, stock numbers, prices, and revision dates.

An asterisk (*) precedes each entry that has been issued since last week and which is now available for sale at the Government Printing Office.

A checklist of current CFR volumes comprising a complete CFR set, also appears in the latest issue of the LSA (List of CFR Sections Affected), which is revised monthly.

The CFR is available free on-line through the Government Printing Office's GPO Access Service at http://www.gpoaccess.gov/cfr/index.html. For information about GPO Access call the GPO User Support Team at 1-888-293-6498 (toll free) or 202-512-1530.

The annual rate for subscription to all revised paper volumes is $1499.00 domestic, $599.60 additional for foreign mailing.

Mail orders to the Superintendent of Documents, Attn: New Orders, P.O. Box 371954, Pittsburgh, PA 15250–7954. All orders must be accompanied by remittance (check, money order, GPO Deposit Account, VISA, Master Card, or Discover). Charge orders may be telephoned to the GPO Order Desk, Monday through Friday, at **(202) 512–1800** from 8:00 a.m. to 4:00 p.m. eastern time, or FAX your charge orders to **(202) 512-2250**.

Title	Stock Number	Price	Revision Date
1	(869–062–00001–4)	5.00	[4] Jan. 1, 2007
2	(869–062–00002–2)	5.00	Jan. 1, 2007
3 (2006 Compilation and Parts 100 and 102)	(869–062–00003–1)	35.00	[1] Jan. 1, 2007
4	(869–062–00004–9)	10.00	[5] Jan. 1, 2007
5 Parts:			
1–699	(869–062–00005–7)	60.00	Jan. 1, 2007
700–1199	(869–062–00006–5)	50.00	Jan. 1, 2007
1200–End	(869–062–00007–3)	61.00	Jan. 1, 2007
6	(869–062–00008–1)	10.50	Jan. 1, 2007
7 Parts:			
1–26	(869–062–00009–0)	44.00	Jan. 1, 2007
27–52	(869–062–00010–3)	49.00	Jan. 1, 2007
53–209	(869–062–00011–1)	37.00	Jan. 1, 2007
210–299	(869–062–00012–0)	62.00	Jan. 1, 2007
300–399	(869–062–00013–8)	46.00	Jan. 1, 2007
400–699	(869–062–00014–6)	42.00	Jan. 1, 2007
700–899	(869–062–00015–4)	43.00	Jan. 1, 2007
900–999	(869–062–00016–2)	60.00	Jan. 1, 2007
1000–1199	(869–062–00017–1)	22.00	Jan. 1, 2007
1200–1599	(869–062–00018–9)	61.00	Jan. 1, 2007
1600–1899	(869–062–00019–7)	64.00	Jan. 1, 2007
1900–1939	(869–062–00020–1)	31.00	Jan. 1, 2007
1940–1949	(869–062–00021–9)	50.00	[5] Jan. 1, 2007
1950–1999	(869–062–00022–7)	46.00	Jan. 1, 2007
2000–End	(869–062–00023–5)	50.00	Jan. 1, 2007
8	(869–062–00024–3)	63.00	Jan. 1, 2007
9 Parts:			
1–199	(869–062–00025–1)	61.00	Jan. 1, 2007
200–End	(869–062–00026–0)	58.00	Jan. 1, 2007
10 Parts:			
1–50	(869–062–00027–8)	61.00	Jan. 1, 2007
51–199	(869–062–00028–6)	58.00	Jan. 1, 2007
200–499	(869–062–00029–4)	46.00	Jan. 1, 2007
500–End	(869–066–00030–8)	62.00	Jan. 1, 2007
11	(869–062–00031–6)	41.00	Jan. 1, 2007
12 Parts:			
1–199	(869–062–00032–4)	34.00	Jan. 1, 2007
200–219	(869–062–00033–2)	37.00	Jan. 1, 2007
220–299	(869–062–00034–1)	61.00	Jan. 1, 2007
300–499	(869–062–00035–9)	47.00	Jan. 1, 2007
500–599	(869–062–00036–7)	39.00	Jan. 1, 2007
600–899	(869–062–00037–5)	56.00	Jan. 1, 2007
900–End	(869–062–00038–3)	50.00	Jan. 1, 2007
13	(869–062–00039–1)	55.00	Jan. 1, 2007
14 Parts:			
1–59	(869–062–00040–5)	63.00	Jan. 1, 2007
60–139	(869–062–00041–3)	61.00	Jan. 1, 2007
140–199	(869–062–00042–1)	30.00	Jan. 1, 2007
200–1199	(869–062–00043–0)	50.00	Jan. 1, 2007
1200–End	(869–062–00044–8)	45.00	Jan. 1, 2007
15 Parts:			
0–299	(869–062–00045–6)	40.00	Jan. 1, 2007
300–799	(869–062–00046–4)	60.00	Jan. 1, 2007
800–End	(869–062–00047–2)	42.00	Jan. 1, 2007
16 Parts:			
0–999	(869–062–00048–1)	50.00	Jan. 1, 2007
1000–End	(869–062–00049–9)	60.00	Jan. 1, 2007
17 Parts:			
1–199	(869–062–00051–1)	50.00	Apr. 1, 2007
200–239	(869–062–00052–9)	60.00	Apr. 1, 2007
240–End	(869–062–00053–7)	62.00	Apr. 1, 2007
18 Parts:			
1–399	(869–062–00054–5)	62.00	Apr. 1, 2007
400–End	(869–062–00055–3)	26.00	Apr. 1, 2007
19 Parts:			
1–140	(869–062–00056–1)	61.00	Apr. 1, 2007
141–199	(869–062–00057–0)	58.00	Apr. 1, 2007
200–End	(869–062–00058–8)	31.00	Apr. 1, 2007
20 Parts:			
1–399	(869–062–00059–6)	50.00	Apr. 1, 2007
400–499	(869–062–00060–0)	64.00	Apr. 1, 2007
500–End	(869–062–00061–8)	63.00	Apr. 1, 2007
21 Parts:			
1–99	(869–062–00062–6)	40.00	Apr. 1, 2007
100–169	(869–062–00063–4)	49.00	Apr. 1, 2007
170–199	(869–062–00064–2)	50.00	Apr. 1, 2007
200–299	(869–062–00065–1)	17.00	Apr. 1, 2007
300–499	(869–062–00066–9)	30.00	Apr. 1, 2007
500–599	(869–062–00067–7)	47.00	Apr. 1, 2007
600–799	(869–062–00068–5)	17.00	Apr. 1, 2007
800–1299	(869–062–00069–3)	60.00	Apr. 1, 2007
1300–End	(869–062–00070–7)	25.00	Apr. 1, 2007
22 Parts:			
1–299	(869–062–00071–5)	63.00	Apr. 1, 2007
300–End	(869–062–00072–3)	45.00	Apr. 1, 2007
23	(869–062–00073–7)	45.00	Apr. 1, 2007
24 Parts:			
0–199	(869–062–00074–0)	60.00	Apr. 1, 2007
200–499	(869–062–00075–8)	50.00	Apr. 1, 2007
500–699	(869–062–00076–6)	30.00	Apr. 1, 2007
700–1699	(869–062–00077–4)	61.00	Apr. 1, 2007
1700–End	(869–062–00078–2)	30.00	Apr. 1, 2007
25	(869–062–00079–1)	64.00	Apr. 1, 2007
26 Parts:			
§§ 1.0–1–1.60	(869–062–00080–4)	49.00	Apr. 1, 2007
§§ 1.61–1.169	(869–062–00081–2)	63.00	Apr. 1, 2007
§§ 1.170–1.300	(869–062–00082–1)	60.00	Apr. 1, 2007
§§ 1.301–1.400	(869–062–00083–9)	47.00	Apr. 1, 2007
§§ 1.401–1.440	(869–062–00084–7)	56.00	Apr. 1, 2007
§§ 1.441–1.500	(869–062–00085–5)	58.00	Apr. 1, 2007
§§ 1.501–1.640	(869–062–00086–3)	49.00	Apr. 1, 2007
§§ 1.641–1.850	(869–062–00087–1)	61.00	Apr. 1, 2007
§§ 1.851–1.907	(869–062–00088–0)	61.00	Apr. 1, 2007
§§ 1.908–1.1000	(869–062–00089–8)	60.00	Apr. 1, 2007
§§ 1.1001–1.1400	(869–062–00090–1)	61.00	Apr. 1, 2007
§§ 1.1401–1.1550	(869–062–00091–0)	58.00	Apr. 1, 2007
§§ 1.1551–End	(869–062–00092–8)	50.00	Apr. 1, 2007
2–29	(869–062–00093–6)	60.00	Apr. 1, 2007
30–39	(869–062–00094–4)	41.00	Apr. 1, 2007
40–49	(869–062–00095–2)	28.00	[7] Apr. 1, 2007
50–299	(869–062–00096–1)	42.00	Apr. 1, 2007

Title	Stock Number	Price	Revision Date
300–499	(869–062–00097–9)	61.00	Apr. 1, 2007
500–599	(869–062–00098–7)	12.00	[6] Apr. 1, 2007
600–End	(869–062–00099–5)	17.00	Apr. 1, 2007
27 Parts:			
1–39	(869–062–00100–2)	64.00	Apr. 1, 2007
40–399	(869–062–00101–1)	64.00	Apr. 1, 2007
400–End	(869–062–00102–9)	18.00	Apr. 1, 2007
28 Parts:			
0–42	(869–062–00103–7)	61.00	July 1, 2007
43–End	(869–062–00104–5)	60.00	July 1, 2007
29 Parts:			
0–99	(869–062–00105–3)	50.00	[9] July 1, 2007
100–499	(869–062–00106–1)	23.00	July 1, 2007
500–899	(869–062–00107–0)	61.00	[9] July 1, 2007
900–1899	(869–062–00108–8)	36.00	July 1, 2007
1900–1910 (§§ 1900 to 1910.999)	(869–062–00109–6)	61.00	July 1, 2007
1910 (§§ 1910.1000 to end)	(869–062–00110–0)	46.00	July 1, 2007
1911–1925	(869–062–00111–8)	30.00	July 1, 2007
1926	(869–062–00112–6)	50.00	July 1, 2007
1927–End	(869–062–00113–4)	62.00	July 1, 2007
30 Parts:			
1–199	(869–062–00114–2)	57.00	July 1, 2007
200–699	(869–062–00115–1)	50.00	July 1, 2007
700–End	(869–062–00116–9)	58.00	July 1, 2007
31 Parts:			
0–199	(869–062–00117–7)	41.00	July 1, 2007
200–499	(869–062–00118–5)	46.00	July 1, 2007
500–End	(869–062–00119–3)	62.00	July 1, 2007
32 Parts:			
1–39, Vol. I		15.00	[2] July 1, 1984
1–39, Vol. II		19.00	[2] July 1, 1984
1–39, Vol. III		18.00	[2] July 1, 1984
1–190	(869–062–00120–7)	61.00	July 1, 2007
191–399	(869–062–00121–5)	63.00	July 1, 2007
400–629	(869–062–00122–3)	61.00	July 1, 2007
630–699	(869–062–00123–1)	37.00	July 1, 2007
700–799	(869–062–00124–0)	46.00	July 1, 2007
800–End	(869–062–00125–8)	47.00	July 1, 2007
33 Parts:			
1–124	(869–062–00126–6)	57.00	July 1, 2007
125–199	(869–062–00127–4)	61.00	July 1, 2007
200–End	(869–062–00128–2)	57.00	July 1, 2007
34 Parts:			
1–299	(869–062–00129–1)	50.00	July 1, 2007
300–399	(869–062–00130–4)	40.00	July 1, 2007
400–End & 35	(869–062–00131–2)	61.00	[8] July 1, 2007
36 Parts:			
1–199	(869–062–00132–1)	37.00	July 1, 2007
200–299	(869–062–00133–9)	37.00	July 1, 2007
300–End	(869–062–00134–7)	61.00	July 1, 2007
37	(869–062–00135–5)	58.00	July 1, 2007
38 Parts:			
0–17	(869–062–00136–3)	60.00	July 1, 2007
18–End	(869–062–00137–1)	62.00	July 1, 2007
39	(869–062–00138–0)	42.00	July 1, 2007
40 Parts:			
1–49	(869–062–00139–8)	60.00	July 1, 2007
50–51	(869–062–00140–1)	45.00	July 1, 2007
52 (52.01–52.1018)	(869–062–00141–0)	60.00	July 1, 2007
52 (52.1019–End)	(869–062–00142–8)	64.00	July 1, 2007
53–59	(869–062–00143–6)	31.00	July 1, 2007
60 (60.1–End)	(869–062–00144–4)	58.00	July 1, 2007
60 (Apps)	(869–062–00145–2)	57.00	July 1, 2007
61–62	(869–062–00146–1)	45.00	July 1, 2007
63 (63.1–63.599)	(869–062–00147–9)	58.00	July 1, 2007
63 (63.600–63.1199)	(869–062–00148–7)	50.00	July 1, 2007
63 (63.1200–63.1439)	(869–062–00149–5)	50.00	July 1, 2007
63 (63.1440–63.6175)	(869–062–00150–9)	32.00	July 1, 2007
63 (63.6580–63.8830)	(869–062–00151–7)	32.00	July 1, 2007
63 (63.8980–End)	(869–062–00152–5)	35.00	July 1, 2007
64–71	(869–062–00153–3)	29.00	July 1, 2007
72–80	(869–062–00154–1)	62.00	July 1, 2007
81–84	(869–062–00155–0)	50.00	July 1, 2007
85–86 (85–86.599–99)	(869–062–00156–8)	61.00	July 1, 2007
86 (86.600–1–End)	(869–062–00157–6)	61.00	July 1, 2007
87–99	(869–062–00158–4)	60.00	July 1, 2007
100–135	(869–062–00159–2)	45.00	July 1, 2007
136–149	(869–062–00160–6)	61.00	July 1, 2007
150–189	(869–062–00161–4)	50.00	July 1, 2007
190–259	(869–062–00162–2)	39.00	[9] July 1, 2007
260–265	(869–062–00163–1)	50.00	July 1, 2007
266–299	(869–062–00164–9)	50.00	July 1, 2007
300–399	(869–062–00165–7)	42.00	July 1, 2007
400–424	(869–062–00166–5)	56.00	[9] July 1, 2007
425–699	(869–062–00167–3)	61.00	July 1, 2007
700–789	(869–062–00168–1)	61.00	July 1, 2007
790–End	(869–062–00169–0)	61.00	July 1, 2007
41 Chapters:			
1, 1–1 to 1–10		13.00	[3] July 1, 1984
1, 1–11 to Appendix, 2 (2 Reserved)		13.00	[3] July 1, 1984
3–6		14.00	[3] July 1, 1984
7		6.00	[3] July 1, 1984
8		4.50	[3] July 1, 1984
9		13.00	[3] July 1, 1984
10–17		9.50	[3] July 1, 1984
18, Vol. I, Parts 1–5		13.00	[3] July 1, 1984
18, Vol. II, Parts 6–19		13.00	[3] July 1, 1984
18, Vol. III, Parts 20–52		13.00	[3] July 1, 1984
19–100		13.00	[3] July 1, 1984
1–100	(869–062–00170–3)	24.00	July 1, 2007
101	(869–062–00171–1)	21.00	July 1, 2007
102–200	(869–062–00172–0)	56.00	July 1, 2007
201–End	(869–062–00173–8)	24.00	July 1, 2007
42 Parts:			
1–399	(869–062–00174–6)	61.00	Oct. 1, 2007
400–413	(869–062–00175–4)	32.00	Oct. 1, 2007
414–429	(869–062–00176–2)	32.00	Oct. 1, 2007
430–End	(869–060–00176–0)	64.00	Oct. 1, 2006
43 Parts:			
1–999	(869–060–00177–8)	56.00	Oct. 1, 2006
1000–end	(869–062–00179–7)	62.00	Oct. 1, 2007
44	(869–060–00179–4)	50.00	Oct. 1, 2006
45 Parts:			
1–199	(869–062–00181–9)	60.00	Oct. 1, 2007
200–499	(869–060–00181–6)	34.00	Oct. 1, 2006
500–1199	(869–062–00183–5)	56.00	Oct. 1, 2007
1200–End	(869–062–00184–3)	61.00	Oct. 1, 2007
46 Parts:			
1–40	(869–062–00185–1)	46.00	Oct. 1, 2007
41–69	(869–062–00186–0)	39.00	Oct. 1, 2007
70–89	(869–060–00186–7)	14.00	Oct. 1, 2006
90–139	(869–062–00188–6)	44.00	Oct. 1, 2007
140–155	(869–062–00189–4)	25.00	Oct. 1, 2007
156–165	(869–062–00190–8)	34.00	Oct. 1, 2007
166–199	(869–060–00190–5)	46.00	Oct. 1, 2006
200–499	(869–062–00192–4)	40.00	Oct. 1, 2007
500–End	(869–062–00193–2)	25.00	Oct. 1, 2007
47 Parts:			
0–19	(869–062–00194–1)	61.00	Oct. 1, 2007
20–39	(869–060–00194–8)	46.00	Oct. 1, 2006
40–69	(869–062–00196–7)	40.00	Oct. 1, 2007
70–79	(869–060–00196–4)	61.00	Oct. 1, 2006
80–End	(869–062–00198–3)	61.00	Oct. 1, 2007
48 Chapters:			
1 (Parts 1–51)	(869–062–00199–1)	63.00	Oct. 1, 2007
1 (Parts 52–99)	(869–062–00200–9)	49.00	Oct. 1, 2007
2 (Parts 201–299)	(869–062–00201–7)	50.00	Oct. 1, 2007
3–6	(869–062–00202–5)	34.00	Oct. 1, 2007

Title	Stock Number	Price	Revision Date
7–14	(869–062–00203–3)	56.00	Oct. 1, 2007
15–28	(869–062–00204–1)	47.00	Oct. 1, 2007
29–End	(869–060–00204–9)	47.00	Oct. 1, 2006
49 Parts:			
1–99	(869–060–00205–7)	60.00	Oct. 1, 2006
100–185	(869–062–00207–6)	63.00	Oct. 1, 2007
186–199	(869–062–00208–4)	23.00	Oct. 1, 2007
200–299	(869–062–00208–1)	32.00	Oct. 1, 2007
300–399	(869–062–00210–6)	32.00	Oct. 1, 2007
400–599	(869–062–00210–3)	64.00	Oct. 1, 2007
600–999	(869–062–00212–2)	19.00	Oct. 1, 2007
1000–1199	(869–062–00213–1)	28.00	Oct. 1, 2007
1200–End	(869–062–00214–9)	34.00	Oct. 1, 2007
50 Parts:			
1–16	(869–060–00214–6)	11.00	[10] Oct. 1, 2006
17.1–17.95(b)	(869–060–00215–4)	32.00	Oct. 1, 2006
17.95(c)–end	(869–062–00217–3)	32.00	Oct. 1, 2007
17.96–17.99(h)	(869–062–00218–1)	61.00	Oct. 1, 2007
17.99(i)–end and 17.100–end	(869–060–00218–9)	47.00	[10] Oct. 1, 2006
18–199	(869–060–00219–7)	50.00	Oct. 1, 2006
200–599	(869–062–00221–1)	45.00	Oct. 1, 2007
600–659	(869–060–00221–9)	31.00	Oct. 1, 2006
660–End	(869–062–00223–8)	31.00	Oct. 1, 2007
CFR Index and Findings Aids	(869–062–00050–2)	62.00	Jan. 1, 2007
Complete 2007 CFR set		1,389.00	2007
Microfiche CFR Edition:			
Subscription (mailed as issued)		332.00	2007
Individual copies		4.00	2007
Complete set (one-time mailing)		332.00	2006
Complete set (one-time mailing)		325.00	2005

[1] Because Title 3 is an annual compilation, this volume and all previous volumes should be retained as a permanent reference source.

[2] The July 1, 1985 edition of 32 CFR Parts 1–189 contains a note only for Parts 1–39 inclusive. For the full text of the Defense Acquisition Regulations in Parts 1–39, consult the three CFR volumes issued as of July 1, 1984, containing those parts.

[3] The July 1, 1985 edition of 41 CFR Chapters 1–100 contains a note only for Chapters 1 to 49 inclusive. For the full text of procurement regulations in Chapters 1 to 49, consult the eleven CFR volumes issued as of July 1, 1984 containing those chapters.

[4] No amendments to this volume were promulgated during the period January 1, 2005, through January 1, 2006. The CFR volume issued as of January 1, 2005 should be retained.

[5] No amendments to this volume were promulgated during the period January 1, 2006, through January 1, 2007. The CFR volume issued as of January 6, 2006 should be retained.

[6] No amendments to this volume were promulgated during the period April 1, 2000, through April 1, 2006. The CFR volume issued as of April 1, 2000 should be retained.

[7] No amendments to this volume were promulgated during the period April 1, 2006 through April 1, 2007. The CFR volume issued as of April 1, 2006 should be retained.

[8] No amendments to this volume were promulgated during the period July 1, 2005, through July 1, 2006. The CFR volume issued as of July 1, 2005 should be retained.

[9] No amendments to this volume were promulgated during the period July 1, 2006, through July 1, 2007. The CFR volume issued as of July 1, 2006 should be retained.

[10] No amendments to this volume were promulgated during the period October 1, 2005, through October 1, 2006. The CFR volume issued as of October 1, 2005 should be retained.