Costs of Compliance

We estimate that this AD will affect 3 out of 316 CF6–80A series turbofan engines installed on airplanes of U.S. registry. We also estimate that it will take about 1 work-hour per engine to perform the actions if the engine is already removed and disassembled to piece-part exposure of the disk, and will take about 115 work-hours per engine for an unplanned engine shop visit. The average labor rate is $80 per work-hour. Required parts would cost about $300,000 per engine. Based on these figures, we estimate the total cost of the AD to U.S. operators to be $927,600.

Authority for This Rulemaking

Title 49 of the United States Code specifies the FAA's authority to issue rules on aviation safety. Subtitle I, Section 106, describes the authority of the FAA Administrator. Subtitle VII, Aviation Programs, describes in more detail the scope of the Agency's authority.

We are issuing this rulemaking under the authority described in Subtitle VII, Part A, Subpart III, Section 44701, ''General requirements.'' Under that section, Congress charges the FAA with promoting safe flight of civil aircraft in air commerce by prescribing regulations for practices, methods, and procedures the Administrator finds necessary for safety in air commerce. This regulation is within the scope of that authority because it addresses an unsafe condition that is likely to exist or develop on products identified in this rulemaking action.

Regulatory Findings

We have determined that this AD will not have federalism implications under Executive Order 13132. This AD will not have a substantial direct effect on the States, on the relationship between the national government and the States, or on the distribution of power and responsibilities among the various levels of government.

For the reasons discussed above, I certify that this AD:

(1) Is not a ''significant regulatory action'' under Executive Order 12866;

(2) Is not a ''significant rule'' under DOT Regulatory Policies and Procedures (44 FR 11034, February 26, 1979); and

(3) Will not have a significant economic impact, positive or negative, on a substantial number of small entities under the criteria of the Regulatory Flexibility Act.

We prepared a summary of the costs to comply with this AD and placed it in the AD Docket. You may get a copy of this summary at the address listed under **ADDRESSES.**

List of Subjects in 14 CFR Part 39

Air transportation, Aircraft, Aviation safety, Safety.

Adoption of the Amendment

■ Accordingly, under the authority delegated to me by the Administrator, the Federal Aviation Administration amends 14 CFR part 39 as follows:

PART 39—AIRWORTHINESS DIRECTIVES

■ 1. The authority citation for part 39 continues to read as follows:

Authority: 49 U.S.C. 106(g), 40113, 44701.

§ 39.13 [Amended]

■ 2. The FAA amends § 39.13 by adding the following new airworthiness directive:

2009–08–06 General Electric Company: Amendment 39–15879. Docket No. FAA–2008–0827; Directorate Identifier 2008–NE–26–AD.

Effective Date

(a) This airworthiness directive (AD) becomes effective May 18, 2009.

Affected ADs

(b) None.

Applicability

(c) This AD applies to General Electric Company (GE) CF6–80A series turbofan engines with any of the following stage 1 high-pressure turbine (HPT) rotor disk part numbers (P/Ns), installed:

(1) 1380M69G01; 1380M69G02; 1380M69G04; 1380M69G05; or 1380M69G06; or

(2) 9234M67G12; 9234M67G13; 9234M67G14; 9234M67G15; or 9234M67G16; or

(3) 9362M58G04; or

(4) 9367M45G01; 9367M45G03; 9367M45G05; 9367M45G06; 9367M45G07; or 9367M45G08.

(d) These CF6–80A series turbofan engines are installed on, but not limited to, Airbus A310–200 series and Boeing 767–200 and –300 series airplanes.

Unsafe Condition

(e) This AD results from the FAA learning that those disks are susceptible to cracks developing at the aft chamfer of the blade dovetail slots. We are issuing this AD to prevent cracks developing at the aft chamfer of the blade dovetail slots that could propagate to a failure of the disk and cause an uncontained engine failure and damage to the airplane.

Compliance

(f) You are responsible for having the actions required by this AD performed within 30 days after the effective date of this AD, unless the actions have already been done.

(g) Remove from service HPT stage 1 rotor disks identified by P/N in paragraph (c) of this AD.

Prohibition of HPT Stage 1 Rotor Disks

(h) After the effective date of this AD, do not install any of the HPT stage 1 rotor disks, listed by P/N in paragraph (c) of this AD into any engine.

Alternative Methods of Compliance

(i) The Manager, Engine Certification Office, has the authority to approve alternative methods of compliance for this AD, if requested using the procedures found in 14 CFR 39.19.

Related Information

(j) Contact Robert Green, Aerospace Engineer, Engine Certification Office, FAA, Engine and Propeller Directorate, 12 New England Executive Park, Burlington, MA 01803; e-mail: *robert.green@faa.gov*; telephone: (781) 238–7754, fax: (781) 238–7199, for more information about this AD.

Material Incorporated by Reference

(k) None.

Issued in Burlington, Massachusetts, on April 6, 2009.

Peter A. White,

Assistant Manager, Engine and Propeller Directorate, Aircraft Certification Service.

[FR Doc. E9–8263 Filed 4–10–09; 8:45 am]

BILLING CODE 4910–13–P

DEPARTMENT OF TRANSPORTATION

Federal Aviation Administration

14 CFR Part 39

[Docket No. FAA–2008–1207; Directorate Identifier 2007–NE–47–AD; Amendment 39–15880; AD 2009–08–07]

RIN 2120–AA64

Airworthiness Directives; Honeywell International Inc. ALF502L–2 and ALF502L–2C Turbofan Engines

AGENCY: Federal Aviation Administration (FAA), DOT.

ACTION: Final rule.

SUMMARY: The FAA is adopting a new airworthiness directive (AD) for Honeywell International Inc. ALF502L–2 and ALF502L–2C turbofan engines with certain high-pressure compressor (HPC) first stage discs installed. This AD requires performing a dimensional inspection to determine if excessive disc balance material was removed and a magnetic particle inspection if the disc

passes the dimensional inspection. This AD results from reports of discs found with excessive material removed from the balancing locations of the disc. We are issuing this AD to prevent the discs from fracturing before reaching the currently published life limit. A disc fracture could result in an uncontained failure of the disc and damage to the airplane.

DATES: This AD becomes effective May 18, 2009.

ADDRESSES: You can get the service information identified in this AD from Honeywell International Inc. 111 S. 34th Street, Phoenix, AZ 85034–2802, U.S.A.; telephone (800) 601–3099, Web site *http://portal.honeywell.com/wps/portal/aero*.

The Docket Operations office is located at Docket Management Facility, U.S. Department of Transportation, 1200 New Jersey Avenue, SE., West Building Ground Floor, Room W12–140, Washington, DC 20590–0001.

FOR FURTHER INFORMATION CONTACT: Robert Baitoo, Aerospace Engineer, Los Angeles Aircraft Certification Office, FAA, Transport Airplane Directorate, 3960 Paramount Blvd., Lakewood, CA 90712–4137; e-mail: *robert.baitoo@faa.gov*; telephone (562) 627–5245; fax (562) 627–5210.

SUPPLEMENTARY INFORMATION: The FAA proposed to amend 14 CFR part 39 with a proposed AD. The proposed AD applies to Honeywell International Inc. ALF502L–2 and ALF502L–2C turbofan engines with certain HPC first stage discs installed. We published the proposed AD in the **Federal Register** on November 28, 2008 (73 FR 72370). That action proposed to require performing a dimensional inspection to determine if excessive disc balance material was removed and a magnetic particle inspection if the disc passes the dimensional inspection.

Examining the AD Docket

You may examine the AD docket on the Internet at *http://www.regulations.gov*; or in person at the Docket Operations office between 9 a.m. and 5 p.m., Monday through Friday, except Federal holidays. The AD docket contains this AD, the regulatory evaluation, any comments received, and other information. The street address for the Docket Operations office (telephone (800) 647–5527) is provided in the **ADDRESSES** section. Comments will be available in the AD docket shortly after receipt.

Comments

We provided the public the opportunity to participate in the development of this AD. We received no comments on the proposal or on the determination of the cost to the public.

Conclusion

We have carefully reviewed the available data and determined that air safety and the public interest require adopting the AD as proposed.

Costs of Compliance

We estimate that this AD will affect 148 engines installed on airplanes of U.S. registry. We also estimate that it will take about 3 work-hours per engine to perform the actions, and that the average labor rate is $80 per work-hour. Required parts will cost about $21,000 per engine. Based on these figures, we estimate the total cost of the AD to U.S. operators to be $3,143,520.

Authority for This Rulemaking

Title 49 of the United States Code specifies the FAA's authority to issue rules on aviation safety. Subtitle I, Section 106, describes the authority of the FAA Administrator. Subtitle VII, Aviation Programs, describes in more detail the scope of the Agency's authority.

We are issuing this rulemaking under the authority described in Subtitle VII, Part A, Subpart III, Section 44701, ''General requirements.'' Under that section, Congress charges the FAA with promoting safe flight of civil aircraft in air commerce by prescribing regulations for practices, methods, and procedures the Administrator finds necessary for safety in air commerce. This regulation is within the scope of that authority because it addresses an unsafe condition that is likely to exist or develop on products identified in this rulemaking action.

Regulatory Findings

We have determined that this AD will not have federalism implications under Executive Order 13132. This AD will not have a substantial direct effect on the States, on the relationship between the national government and the States, or on the distribution of power and responsibilities among the various levels of government.

For the reasons discussed above, I certify that this AD:

(1) Is not a ''significant regulatory action'' under Executive Order 12866;

(2) Is not a ''significant rule'' under DOT Regulatory Policies and Procedures (44 FR 11034, February 26, 1979); and

(3) Will not have a significant economic impact, positive or negative, on a substantial number of small entities under the criteria of the Regulatory Flexibility Act.

We prepared a summary of the costs to comply with this AD and placed it in the AD Docket. You may get a copy of this summary at the address listed under **ADDRESSES**.

List of Subjects in 14 CFR Part 39

Air transportation, Aircraft, Aviation safety, Safety.

Adoption of the Amendment

■ Accordingly, under the authority delegated to me by the Administrator, the Federal Aviation Administration amends 14 CFR part 39 as follows:

PART 39—AIRWORTHINESS DIRECTIVES

■ 1. The authority citation for part 39 continues to read as follows:

Authority: 49 U.S.C. 106(g), 40113, 44701.

§ 39.13 [Amended]

■ 2. The FAA amends § 39.13 by adding the following new airworthiness directive:

2009–08–07 Honeywell International Inc. (Formerly AlliedSignal and Lycoming): Amendment 39–15880. Docket No. FAA–2008–1207; Directorate Identifier 2007–NE–47–AD.

Effective Date

(a) This airworthiness directive (AD) becomes effective May 18, 2009.

Affected ADs

(b) None.

Applicability

(c) This AD applies to Honeywell International Inc. ALF502L–2 and ALF502L–2C turbofan engines with high pressure compressor (HPC) first stage discs, part numbers (P/Ns) 2–101–331–03, 2–101–331–04, and 2–101–331–10, installed. These engines are installed on, but not limited to, Bombardier CL–600–1A11 airplanes.

Unsafe Condition

(d) This AD results from reports of discs found with excessive material removed from the balancing locations of the disc. We are issuing this AD to prevent the discs from fracturing before reaching the currently published life limit. A disc fracture could result in an uncontained failure of the disc and damage to the airplane.

Compliance

(e) You are responsible for having the actions required by this AD performed at the next shop visit, but not later than 2,500 cycles-in-service after the effective date of this AD, unless the actions have already been done.

Visual Inspection

(f) For discs with 5,000 or more cycles-since-new on the effective date of this AD, perform a dimensional inspection of the HPC first stage disc to determine if excessive disc

balance material was removed. See the following Figure 1 for limits.

BILLING CODE 4910–13–P

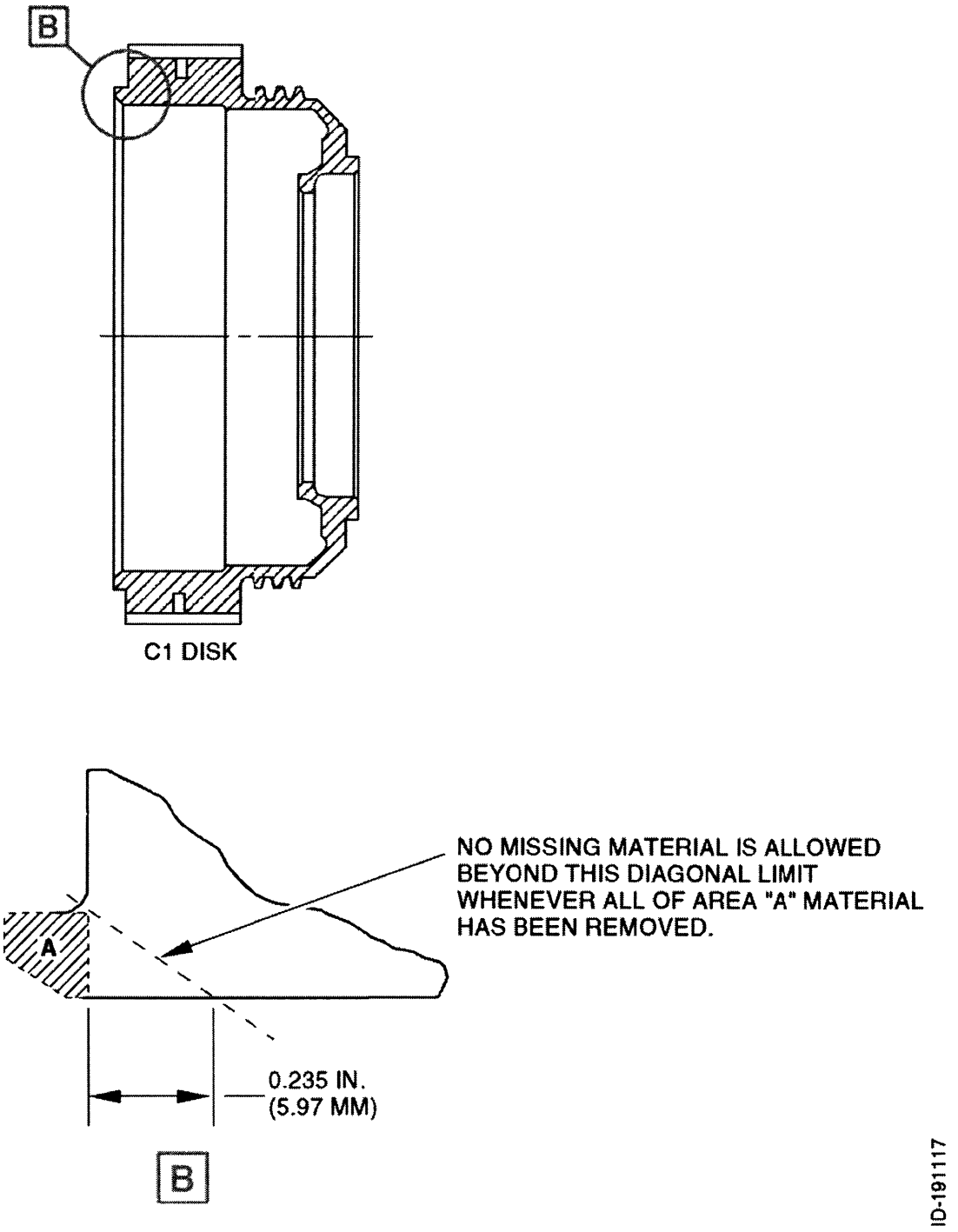

Limits for Removed Balance Material, Disc Forward Flange
Figure 1 (Sheet 1 of 2)

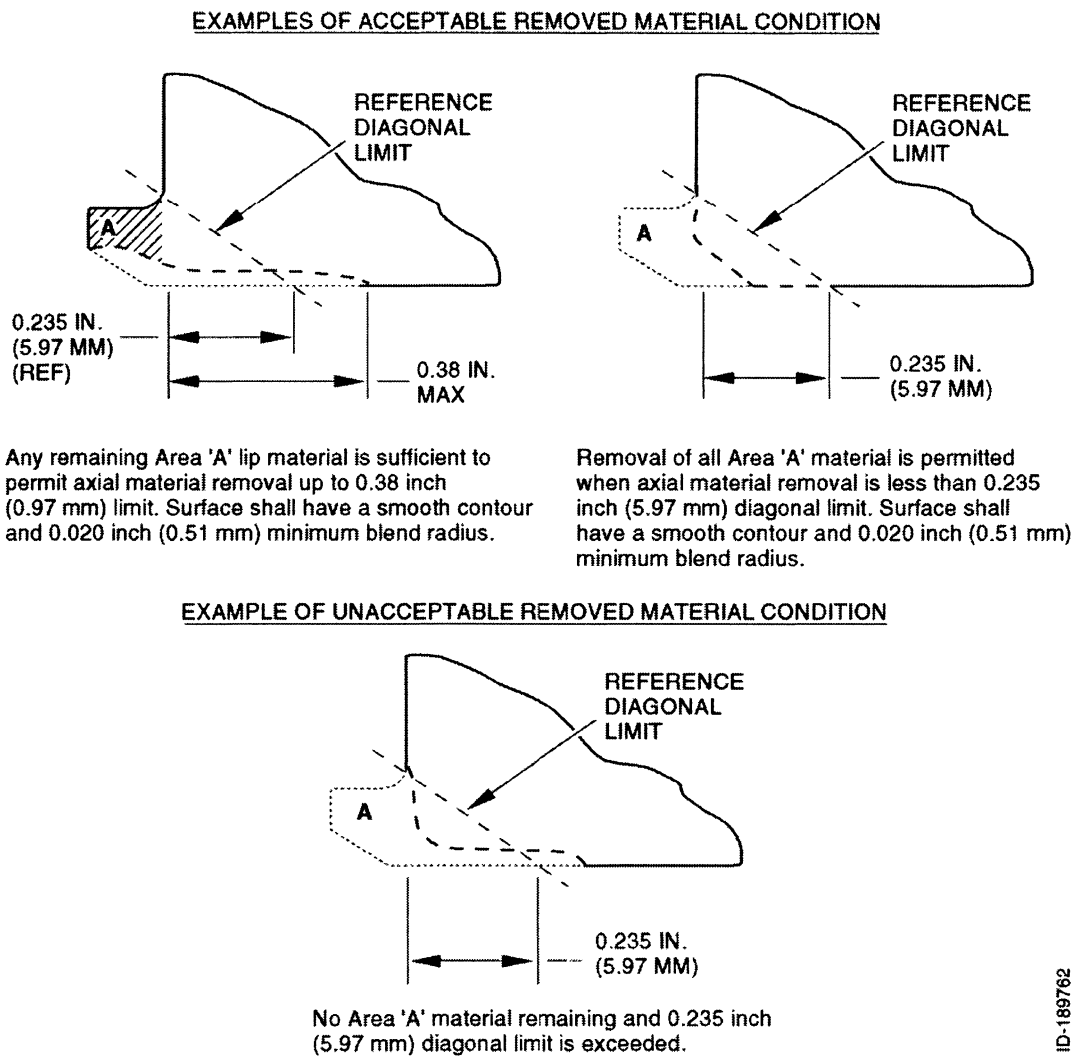

Limits for Removed Balance Material, Disc Forward Flange
Figure 1 (Sheet 2 of 2)

(g) Replace the disc if excessive disc balance material was removed. See limits in Figure 1 of this AD.

(h) If the removed balance material condition is acceptable, perform a magnetic particle inspection of the disc rim and slots for cracks using a 3 to 7 power magnification glass. The Engine Overhaul Manual, 72–34–11, Inspection/Check, contains information on the magnetic particle inspection procedure. Contact Honeywell International Inc., 111 S. 34th Street, Phoenix, AZ 85034–2802, U.S.A.; telephone (800) 601–3099, Web site *http://portal.honeywell.com/wps/portal/aero,* for a copy of this service information.

(i) Replace the disc if you find any cracks.

Alternative Methods of Compliance

(j) The Manager, Los Angeles Aircraft Certification Office, has the authority to approve alternative methods of compliance for this AD if requested using the procedures found in 14 CFR 39.19.

Related Information

(k) Honeywell Alert Service Bulletin ALF/LF A72–1102, dated April 24, 2007, contains information that pertains to the subject of this AD. Contact Honeywell International Inc., 111 S. 34th Street, Phoenix, AZ 85034–2802, U.S.A.; telephone (800) 601–3099, Web site *http://portal.honeywell.com/wps/portal/aero,* for a copy of this service information.

(l) Contact Robert Baitoo, Aerospace Engineer, Los Angeles Aircraft Certification Office, FAA, Transport Airplane Directorate, 3960 Paramount Blvd., Lakewood, CA 90712–4137; e-mail: *robert.baitoo@faa.gov;* telephone (562) 627–5245; fax (562) 627–5210, for more information about this AD.

Material Incorporated by Reference

(m) None.

Issued in Burlington, Massachusetts, on April 6, 2009.

Peter A. White,

Assistant Manager, Engine and Propeller Directorate, Aircraft Certification Service.

[FR Doc. E9–8264 Filed 4–10–09; 8:45 am]

BILLING CODE 4910–13–C

DEPARTMENT OF TRANSPORTATION

Federal Aviation Administration

14 CFR Part 95

[Docket No. 30653; Amdt. No. 479]

IFR Altitudes; Miscellaneous Amendments

AGENCY: Federal Aviation Administration (FAA), DOT.

ACTION: Final rule.