AUTHENTICATED
U.S. GOVERNMENT
INFORMATION
GPO

Federal Register

4–13–09 Monday
Vol. 74 No. 69 Apr. 13, 2009

Pages 16753–17074

The **FEDERAL REGISTER** (ISSN 0097–6326) is published daily, Tuesday through Friday, except official holidays, by the Office of the Federal Register, National Archives and Records Administration, Washington, DC 20408, under the Federal Register Act (44 U.S.C. Ch. 15) and the regulations of the Administrative Committee of the Federal Register (1 CFR Ch. I). The Superintendent of Documents, U.S. Government Printing Office, Washington, DC 20402 is the exclusive distributor of the official edition. Periodicals postage is paid at Washington, DC.

The **FEDERAL REGISTER** provides a uniform system for making available to the public regulations and legal notices issued by Federal agencies. These include Presidential proclamations and Executive Orders, Federal agency documents having general applicability and legal effect, documents required to be published by act of Congress, and other Federal agency documents of public interest.

Documents are on file for public inspection in the Office of the Federal Register the day before they are published, unless the issuing agency requests earlier filing. For a list of documents currently on file for public inspection, see *www.federalregister.gov.*

The seal of the National Archives and Records Administration authenticates the Federal Register as the official serial publication established under the Federal Register Act. Under 44 U.S.C. 1507, the contents of the **Federal Register** shall be judicially noticed.

The **Federal Register** is published in paper and on 24x microfiche. It is also available online at no charge as one of the databases on GPO Access, a service of the U.S. Government Printing Office.

The online edition of the **Federal Register** *www.gpoaccess.gov/nara,* available through GPO Access, is issued under the authority of the Administrative Committee of the Federal Register as the official legal equivalent of the paper and microfiche editions (44 U.S.C. 4101 and 1 CFR 5.10). It is updated by 6 a.m. each day the **Federal Register** is published and includes both text and graphics from Volume 59, Number 1 (January 2, 1994) forward.

For more information about GPO Access, contact the GPO Access User Support Team, call toll free 1-888-293-6498; DC area 202-512-1530; fax at 202-512-1262; or via e-mail at *gpoaccess@gpo.gov.* The Support Team is available between 7:00 a.m. and 9:00 p.m. Eastern Time, Monday–Friday, except official holidays.

The annual subscription price for the **Federal Register** paper edition is $749 plus postage, or $808, plus postage, for a combined **Federal Register, Federal Register** Index and List of CFR Sections Affected (LSA) subscription; the microfiche edition of the **Federal Register** including the **Federal Register** Index and LSA is $165, plus postage. Six month subscriptions are available for one-half the annual rate. The prevailing postal rates will be applied to orders according to the delivery method requested. The price of a single copy of the daily **Federal Register,** including postage, is based on the number of pages: $11 for an issue containing less than 200 pages; $22 for an issue containing 200 to 400 pages; and $33 for an issue containing more than 400 pages. Single issues of the microfiche edition may be purchased for $3 per copy, including postage. Remit check or money order, made payable to the Superintendent of Documents, or charge to your GPO Deposit Account, VISA, MasterCard, American Express, or Discover. Mail to: U.S. Government Printing Office—New Orders, P.O. Box 979050, St. Louis, MO 63197-9000; or call toll free 1-866-512-1800, DC area 202-512-1800; or go to the U.S. Government Online Bookstore site, see *bookstore.gpo.gov.*

There are no restrictions on the republication of material appearing in the **Federal Register.**

How To Cite This Publication: Use the volume number and the page number. Example: 74 FR 12345.

Postmaster: Send address changes to the Superintendent of Documents, Federal Register, U.S. Government Printing Office, Washington, DC 20402, along with the entire mailing label from the last issue received.

SUBSCRIPTIONS AND COPIES

PUBLIC

Subscriptions:

Paper or fiche	**202–512–1800**
Assistance with public subscriptions	**202–512–1806**
General online information	**202–512–1530; 1–888–293–6498**

Single copies/back copies:

Paper or fiche	**202–512–1800**
Assistance with public single copies	**1–866–512–1800 (Toll-Free)**

FEDERAL AGENCIES

Subscriptions:

Paper or fiche	**202–741–6005**
Assistance with Federal agency subscriptions	**202–741–6005**

FEDERAL REGISTER WORKSHOP

THE FEDERAL REGISTER: WHAT IT IS AND HOW TO USE IT

FOR: Any person who uses the Federal Register and Code of Federal Regulations.

WHO: Sponsored by the Office of the Federal Register.

WHAT: Free public briefings (approximately 3 hours) to present:

1. The regulatory process, with a focus on the Federal Register system and the public's role in the development of regulations.
2. The relationship between the Federal Register and Code of Federal Regulations.
3. The important elements of typical Federal Register documents.
4. An introduction to the finding aids of the FR/CFR system.

WHY: To provide the public with access to information necessary to research Federal agency regulations which directly affect them. There will be no discussion of specific agency regulations.

WHEN: Tuesday, April 14, 2009
9:00 a.m.–12:30 p.m.

WHERE: Office of the Federal Register
Conference Room, Suite 700
800 North Capitol Street, NW.
Washington, DC 20002

RESERVATIONS: (202) 741–6008

Printed on recycled paper.

Contents

Federal Register

Vol. 74, No. 69

Monday, April 13, 2009

Administration on Aging
See Aging Administration

Aging Administration
NOTICES
Agency Information Collection Activities; Proposals, Submissions, and Approvals, 16874

Agricultural Marketing Service
PROPOSED RULES
Secretary's Decision and Referendum Order on Proposed Amendments to Marketing Agreement 84 and Order No. 905:
Oranges, Grapefruit, Tangerines, and Tangelos Grown in Florida, 16798–16802

Agriculture Department
See Agricultural Marketing Service
See Animal and Plant Health Inspection Service
See Forest Service
See Rural Business–Cooperative Service
NOTICES
Agency Information Collection Activities; Proposals, Submissions, and Approvals, 16830

Animal and Plant Health Inspection Service
RULES
Agricultural Bioterrorism Protection Act of 2002:
Biennial Review and Republication of the Select Agent and Toxin List; Delay of Compliance Date for Newly Registered Entities, 16753–16754
PROPOSED RULES
Importation, Interstate Movement, and Release Into the Environment of Certain Genetically Engineered Organisms, 16797–16798

Arts and Humanities, National Foundation
See National Foundation on the Arts and the Humanities

Census Bureau
NOTICES
Agency Information Collection Activities; Proposals, Submissions, and Approvals, 16833–16834
Meetings:
2010 Census Advisory Committee, 16845–16846

Centers for Disease Control and Prevention
NOTICES
Agency Information Collection Activities; Proposals, Submissions, and Approvals, 16873–16875
Meetings:
Advisory Committee to the Director, Centers for Disease Control, 16877–16878
Board of Scientific Counselors, Coordinating Center for Infectious Diseases, 16877
Board of Scientific Counselors, National Center for Health Statistics, 16876–16877
Disease, Disability, and Injury Prevention and Control Special Emphasis Panel, 16877
National Center for Injury Prevention and Control, Initial Review Group; Correction, 16878
Subcommittee on Procedures Reviews, Advisory Board on Radiation and Worker Health, National Institute for Occupational Safety and Health, 16878

Children and Families Administration
NOTICES
Agency Information Collection Activities; Proposals, Submissions, and Approvals, 16875–16876

Coast Guard
RULES
Drawbridge Operating Regulations:
Back Bay of Biloxi, Biloxi, MS, 16781
Black Warrior River, Eutaw, AL, 16781–16782
Gulf Intracoastal Waterway, Belle Chasse, LA, 16782
Drawbridge Operation Regulations:
Chelsea River, Chelsea and East Boston, MA; Maintenance, 16783
Jamaica Bay, New York, NY, Maintenance, 16782–16783
PROPOSED RULES
Drawbridge Operation Regulations:
LaLoutre Bayou, Yscloskey, LA; Withdrawal, 16814
Regulated Navigation Areas:
Bars Along the Coasts of Oregon and Washington; Public Meetings, 16814–16815

Commerce Department
See Census Bureau
See International Trade Administration
See National Oceanic and Atmospheric Administration
See National Telecommunications and Information Administration

Commission of Fine Arts
NOTICES
Meetings:
U.S. Commission of Fine Arts, 16850

Defense Department
PROPOSED RULES
Federal Acquisition Regulation:
HUBZone Program Revisions, 16823–16829

Department of Transportation
See Pipeline and Hazardous Materials Safety Administration

Employment and Training Administration
NOTICES
Termination of Investigation:
Bernhardt Furniture Co., Corporate Office, Lenoir, NC, 16896
Broan–Nutone Co., Hartford, WI, 16896
Charlton Group, Inc., Rockford, MI, 16894
Chemical Coatings, Inc., Hudson, NC, 16895
Citibank/Citigroup, Hagerstown, MD, 16897
Destination Maternity Corp., Formerly Known as Mother's Working Inc., Philadelphia, PA, 16894
Eaton Aviation Corp., Aurora, CO, 16896
Eaton Corporation, Truck Components, Greenfield, IN, 16895
Fleetwood Industries, Inc., Leesport, PA, 16894

Glaize Components, Shelby, NC, 16894
Hon Co.– HNI, Owensboro, KY, 16895
Hyosung USA Inc., Utica Plant division, Utica, NY, 16896
IAC Fremont, LLC, New Production Introduction Assembly, Fremont, OH, 16897
Imperial Carbide, Inc., Meadville, PA, 16895–16896
Modine Manufacturing Co., Pemberville, OH, 16897
Parkdale Mills, Inc., Gastonia, NC, 16897
Pfizer Global Manufacturing, a Subsidiary of Pfizer, Terre Haute, IN, 16897–16898
Piece Dye Works, Inc., North Bergen, NJ, 16895
Republic Doors and Frames, Inc., McKenzie, TN, 16893–16894
Reynolds Food Packaging, Grove City, PA, 16896
Rowe International Corp., Belding, MI, 16893
Tyco Electronics; Greensboro, NC, 16898
United Machine Works, Inc., Greenville, NC, 16894
Vaagen Brothers Lumber, Inc., Colville, WA, 16896
Veyance Technologies, Inc., Formerly Goodyear, Sun Prairie, WI, 16897
Vishay Intertechnology, Inc., Vishay Dale Electronics, Columbus, NE, 16894
Webb Wheel Products, Inc., Cullman, AL, 16895
Weyerhaeuser Level, Grayling, MI, 16895
Wilson Sporting Goods Co., Ada, OH, 16897

Energy Department
See Federal Energy Regulatory Commission
PROPOSED RULES
Energy Conservation Program:
Energy Conservation Standards for General Service Fluorescent Lamps and Incandescent Reflector Lamps, 16920–17027

Environmental Protection Agency
NOTICES
Certain New Chemicals:
Receipt and Status Information, 16854–16866
Pesticide Petitions:
Residues of Pesticide Chemicals in or on Various Commodities, 16866–16870

Executive Office of the President
See Presidential Documents
See Trade Representative, Office of United States

Federal Aviation Administration
RULES
Airworthiness Directives:
General Electric Company (GE) CF6–80A Series Turbofan Engines, 16754–16755
Honeywell International Inc. ALF502L–2 and ALF502L–2C Turbofan Engines, 16755–16758
IFR Altitudes:
Miscellaneous Amendments, 16758–16763
PROPOSED RULES
Airspace Designations:
Proposed Modification of Class E Airspace; Montrose, CO, 16812–16814
Airworthiness Directives:
Hamilton Sundstrand Power Systems T 62T 46C12 Auxiliary Power Units, 16811–16812
Honeywell International Inc. ALF502 Series and LF507 Series Turbofan Engines, 16803–16806
Honeywell International Inc. TFE731 Series Turbofan Engines, 16807–16809
Turbomeca S.A. ARRIUS 2F Turboshaft Engines, 16809–16811
NOTICES
Meetings:
Commercial Space Transportation Advisory Committee, 16914

Federal Communications Commission
RULES
FCC Announces Revised Application Fee Schedule, 16794–16795
NOTICES
Petitions for Reconsideration of Action in Rulemaking Proceeding, 16870

Federal Deposit Insurance Corporation
NOTICES
Meetings; Sunshine Act, 16870

Federal Emergency Management Agency
RULES
Changes in Flood Elevation Determinations, 16783–16785
Final Flood Elevation Determinations, 16785–16794
NOTICES
Compendium of Flood Map Changes, 16882–16883
Emergency and Related Determinations:
Minnesota, 16883
Emergency Declaration:
Massachusetts, 16884
Missouri, 16883–16884
Major Disaster and Related Determinations:
North Dakota, 16884–16885
Major Disaster Declaration:
Kentucky, 16885
Massachusetts, 16885
Oregon, 16885

Federal Energy Regulatory Commission
NOTICES
Combined Notice of Filings, 16850–16854

Federal Highway Administration
NOTICES
Buy America Waiver Notification, 16912–16913
Environmental Impact Statements; Intent:
Erie County, NY, 16913–16914

Federal Reserve System
NOTICES
Formations of, Acquisitions by, and Mergers of Bank Holding Companies, 16870–16871

Fine Arts Commission
See Commission of Fine Arts

Fish and Wildlife Service
NOTICES
Draft Comprehensive Conservation Plans and Environmental Assessments; Availability:
Kirtlands Warbler Wildlife Management Area, Northern Lower Peninsula of Michigan, 16886–16888
Final Comprehensive Conservation Plan:
Sullys Hill National Game Preserve, Fort Totten, ND, 16890–16891

Foreign Assets Control Office
RULES
Persons Contributing to the Conflict in Cote d'Ivoire Sanctions Regulations, 16763–16771
Weapons of Mass Destruction Proliferators Sanctions Regulations, 16771–16781

Forest Service
NOTICES
Meeting:
Davy Crockett National Forest Resource Advisory Committee, 16830–16831
Meetings:
Alpine County Resource Advisory Committee, 16831
Tehama County Resource Advisory Committee, 16831
Newspapers Used for Publication of Legal Notices in the Southwestern Region which includes Arizona, New Mexico, and parts of Oklahoma and Texas, 16831–16833

General Services Administration
PROPOSED RULES
Federal Acquisition Regulation:
HUBZone Program Revisions, 16823–16829
NOTICES
Meetings:
Multiple Award Schedule Advisory Panel, 16871

Health and Human Services Department
See Aging Administration
See Centers for Disease Control and Prevention
See Children and Families Administration
See National Institutes of Health
NOTICES
Meetings:
Advisory Committee on Blood Safety and Availability, 16871–16872
Solicitation of Written Comments on Draft National Vaccine Advisory Committee Vaccine Safety Working Group, etc., 16872–16873

Homeland Security Department
See Coast Guard
See Federal Emergency Management Agency
See Transportation Security Administration

Interior Department
See Fish and Wildlife Service
See Land Management Bureau
See National Park Service
NOTICES
Meetings:
Blackstone River Valley National Heritage Corridor Commission, 16885–16886

International Trade Administration
NOTICES
Antidumping:
Polyvinyl Alcohol from Japan, the Republic of Korea and the People's Republic of China, 16834–16835
Wooden Bedroom Furniture from the People's Republic of China, 16834
Applications for Duty-Free Entry of Scientific Instruments, 16835–16836
Countervailing Duties:
Citric Acid and Certain Citrate Salts from the People's Republic of China, 16836–16838
Duty-Free Entry of Scientific Instruments Applications:
California Association for Research in Astronomy dba W.M. Keck Observatory, Kamuela, HI, 16836
Final Affirmative Determination of Sales at Less Than Fair Value:
Citric Acid and Certain Citrate Salts from the People's Republic of China, 16838–16842
Final Determination of Sales at Less Than Fair Value:
Citric Acid and Certain Citrate Salts from Canada, 16843–16845

International Trade Commission
NOTICES
Investigations:
Self-Cleaning Litter Boxes and Components, 16892–16893

Justice Department
NOTICES
Consent Decree:
United States of America v. The Port of Astoria, OR, 16893

Labor Department
See Employment and Training Administration

Land Management Bureau
NOTICES
Environmental Assessment and Notice of Public Hearing:
BNI Coal, Ltd., Federal Coal Lease Application; Availability, 16886
Greens Hollow, Federal Coal Lease Application; Availability, 16891–16892

Maritime Administration
NOTICES
Assistance to Small Shipyards Grant Program, 16912

National Aeronautics and Space Administration
PROPOSED RULES
Federal Acquisition Regulation:
HUBZone Program Revisions, 16823–16829
NOTICES
Meetings:
NASA International Space Station Advisory Committee, 16898

National Foundation on the Arts and the Humanities
NOTICES
Meetings:
Humanities Panel, 16898

National Institutes of Health
NOTICES
Meetings:
Center for Scientific Review, 16876, 16878–16879

National Oceanic and Atmospheric Administration
RULES
Fisheries of the Northeastern United States:
Northeast Multispecies Fishery; Secretarial Interim Action, 17030–17065
NOTICES
Meetings:
Caribbean Fishery Management Council, 16846–16850

National Park Service
NOTICES
Environmental Impact Statements; Availability, etc.:
Hawaii Volcanoes National Park, Hawaii; General Management Plan, 16888–16889
Resource Protection Study, Record of Decision, Curecanti National Recreation Area, CO, 16889–16890

National Science Foundation
PROPOSED RULES
Records and Information, 16815–16823

National Telecommunications and Information Administration

RULES
Corrections to Part 300, Manual of Regulations and Procedures for Federal Radio Frequency Management, 16795–16796

Nuclear Regulatory Commission
PROPOSED RULES
Bob Christie; Consideration of Petition in Rulemaking Process, 16802–16803

Office of United States Trade Representative
See Trade Representative, Office of United States

Pipeline and Hazardous Materials Safety Administration
NOTICES
Application for Special Permits, 16910–16911
Applications for Modification of Special Permit, 16911–16912

Postal Service
NOTICES
Change in Rates of General Applicability for Competitive Products; Correction, 16899

Presidential Documents
PROCLAMATIONS
Special Observances:
National Sexual Assault Awareness Month (Proc. 8359), 17067–17070
EXECUTIVE ORDERS
Government Agencies and Employees:
White House Office of Health Reform; Establishment (EO 13507), 17071–17073

Rural Business–Cooperative Service
NOTICES
Inviting Applications for Rural Business Opportunity Grants; Extended Deadline Dates, 16830

Securities and Exchange Commission
NOTICES
Self-Regulatory Organizations; Proposed Rule Change:
BATS Exchange, Inc., 16899–16901
NASDAQ OMX PHLX, Inc., 16906–16907
NASDAQ Stock Market LLC, 16903–16905
NYSE Arca, Inc., 16901–16903

State Department
NOTICES
Meetings:
Advisory Committee on Private International Law; Working Group I of the United Nations Commission on International Trade Law, etc., 16908
Shipping Coordinating Committee, 16908

Surface Transportation Board
NOTICES
Supplemental Report to the U.S. Surface Transportation Board on Capacity and Infrastructure Investment; Web Site Availability, 16914–16915

Trade Representative, Office of United States
NOTICES
Free Trade Agreements:
Invitation for Applications for Inclusion on the Dominican Republic – Central America – United States Free Trade Agreement Dispute Settlement Rosters, 16908–16910

Transportation Department
See Federal Aviation Administration
See Federal Highway Administration
See Maritime Administration
See Pipeline and Hazardous Materials Safety Administration
See Surface Transportation Board
See Transportation Security Administration

Transportation Security Administration
NOTICES
Agency Information Collection Activities; Proposals, Submissions, and Approvals, 16879–16880
Alien Flight Student Program Recurrent Training Fees, 16880–16882

Treasury Department
See Foreign Assets Control Office
See United States Mint
NOTICES
Agency Information Collection Activities; Proposals, Submissions, and Approvals, 16915–16916

U.S.–China Economic and Security Review Commission
NOTICES
Public Hearings, 16916

United States Institute of Peace
NOTICES
Meetings, 16916–16917

United States Mint
NOTICES
Meetings:
Citizens Coinage Advisory Committee, 16916

Separate Parts In This Issue

Part II
Energy Department, 16920–17027

Part III
Commerce Department, National Oceanic and Atmospheric Administration, 17030–17065

Part IV
Presidential Documents, 17067–17073

Reader Aids

Consult the Reader Aids section at the end of this page for phone numbers, online resources, finding aids, reminders, and notice of recently enacted public laws.

To subscribe to the Federal Register Table of Contents LISTSERV electronic mailing list, go to http://listserv.access.gpo.gov and select Online mailing list archives, FEDREGTOC-L, Join or leave the list (or change settings); then follow the instructions.

CFR PARTS AFFECTED IN THIS ISSUE

A cumulative list of the parts affected this month can be found in the Reader Aids section at the end of this issue.

3 CFR

Proclamations:

8359 17069

Executive Orders:

13507 17071

7 CFR

331 16753

Proposed Rules:

340 16797
905 16798

9 CFR

121 16753

10 CFR

Proposed Rules:

50 16802
430 16920

14 CFR

39 (2 documents) 16754, 16755
95 16758

Proposed Rules:

39 (4 documents) 16803, 16807, 16809, 16811
71 16812

31 CFR

543 16763
544 16771

33 CFR

117 (5 documents) 16781, 16782, 16783

Proposed Rules:

117 16814
165 16814

44 CFR

65 16783
67 16785

45 CFR

Proposed Rules:

612 16815

47 CFR

1 16794
300 16795

48 CFR

Proposed Rules:

2 16823
19 16823
52 16823

50 CFR

648 17030

Rules and Regulations

Federal Register
Vol. 74, No. 69
Monday, April 13, 2009

This section of the FEDERAL REGISTER contains regulatory documents having general applicability and legal effect, most of which are keyed to and codified in the Code of Federal Regulations, which is published under 50 titles pursuant to 44 U.S.C. 1510.

The Code of Federal Regulations is sold by the Superintendent of Documents. Prices of new books are listed in the first FEDERAL REGISTER issue of each week.

DEPARTMENT OF AGRICULTURE

Animal and Plant Health Inspection Service

7 CFR Part 331

9 CFR Part 121

[Docket No. APHIS–2007–0033]

RIN 0579–AC53

Agricultural Bioterrorism Protection Act of 2002; Biennial Review and Republication of the Select Agent and Toxin List; Delay of Compliance Date for Newly Registered Entities

AGENCY: Animal and Plant Health Inspection Service, USDA.

ACTION: Final rule; delay of compliance date.

SUMMARY: In a final rule published in the **Federal Register** on October 16, 2008 (73 FR 61325–61332, Docket No. APHIS–2007–0033), and effective November 17, 2008, we amended and republished the list of select agents and toxins that have the potential to pose a severe threat to animal or plant health, or to animal or plant products, thus implementing the findings of the second biennial review of that list. Among other changes, we changed the entry for ''Newcastle disease virus (velogenic)'' to read ''virulent Newcastle disease virus,'' thus including some non-velogenic strains of Newcastle disease virus as select agents. The final rule set the compliance date for entities that were newly required to register as entities possessing select agents or toxins as April 14, 2009. Since the publication of the final rule, we have been notified of entities that use virulent Newcastle disease virus and that have not previously been registered. This notice informs the public that we are extending the compliance date for new registrants to July 13, 2009, to give us additional time to determine how best to regulate those entities.

DATES: The compliance date for entities that are newly required to register is extended to July 13, 2009.

FOR FURTHER INFORMATION CONTACT: For information concerning the regulations in 7 CFR part 331, contact Ms. Cassie Armiger, Program Analyst, Select Agent Program, PPQ, APHIS, 4700 River Road, Unit 2, Riverdale, MD 20737–1231; (301) 734–5960.

For information concerning the regulations in 9 CFR part 121, contact Dr. Freeda Isaac, Director, NCIE, VS, APHIS, 4700 River Road, Unit 39, Riverdale, MD 20737–1231; (301) 734–8364.

SUPPLEMENTARY INFORMATION:

Background

The Public Health Security and Bioterrorism Preparedness and Response Act of 2002 provides for the regulation of certain biological agents and toxins that have the potential to pose a severe threat to both human and animal health, to animal health, to plant health, or to animal and plant products. Veterinary Services (VS) select agents and toxins are those that have been determined to have the potential to pose a severe threat to animal health or animal products.

Subtitle B (which is cited as the ''Agricultural Bioterrorism Protection Act of 2002''), section 212(a), provides, in part, that the Secretary of Agriculture (the Secretary) must establish by regulation a list of each biological agent and each toxin that the Secretary determines has the potential to pose a severe threat to animal or plant health, or to animal or plant products. Paragraph (a)(2) of section 212 requires the Secretary to review and republish the list every 2 years and to revise the list as necessary.

On August 28, 2007, in accordance with the Act, we published in the **Federal Register** (72 FR 49231–49236, Docket No. APHIS–2007–0033) a proposal [1] to amend and republish the list of select agents and toxins that have the potential to pose a severe threat to animal or plant health, or to animal or plant products. Among other things, we proposed to add some select agents and toxins to the list.

In the list of VS select agents and toxins in 9 CFR 121.3, we also proposed to change the entry for ''Newcastle disease virus (velogenic)'' to read ''virulent Newcastle disease virus,'' consistent with the World Organization for Animal Health (OIE) definition of the virus. Newcastle disease has lentogenic, mesogenic, and velogenic strains, the last of which are typically virulent; however, consistent with the OIE definition, we proposed that any Newcastle disease virus could be considered virulent if it has an intracerebral pathogenicity index in day-old chicks of 0.7 or greater or has an amino acid sequence at the fusion protein cleavage site that is consistent with virulent strains of Newcastle disease virus. This information was provided in a footnote to the proposed entry for ''virulent Newcastle disease virus.''

We noted in the proposal that ''the redefinition of Newcastle disease virus (velogenic) to virulent Newcastle disease virus may lead to new registrants. It is possible that additional entities may be in possession of a virulent strain of Newcastle disease virus that does not fit the current definition. However, these strains have not circulated in the United States since the 1970s. In addition, entities most likely to be in possession of virulent Newcastle disease virus are already in possession of Newcastle disease virus (velogenic) and therefore already registered.''

We solicited comments concerning our proposal for 60 days ending October 29, 2007. We reopened and extended the deadline for comments until December 3, 2007, in a document published in the **Federal Register** on November 16, 2007 (72 FR 64540, Docket No. APHIS–2007–0033). We received 62 comments by that date. None of the comments addressed the proposed change to the entry for Newcastle disease virus.

In a final rule published in the **Federal Register** on October 16, 2008 (73 FR 61325–61332, Docket No. APHIS–2007–0033), and effective November 17, 2008, we amended and republished the list of select agents and toxins, adding the proposed new select agents and toxins and finalizing the change to the entry for Newcastle

[1] To view the proposed rule and the comments we received, go to *http://www.regulations.gov/fdmspublic/component/main?main=DocketDetail&d=APHIS-2007-0033.*

disease. Entities that possessed the select agents and toxins added in the final rule and that had not been registered were now required to register under the select agent regulations.

To minimize the disruption of research or educational projects (*e.g.,* teaching demonstrations) involving listed select agents or toxins, the final rule provided any individual or entity possessing newly added select agents or toxins as of the effective date of the final rule, November 17, 2008, with additional time to reach full compliance with the select agent regulations. The responsible official at all entities that possessed a new agent or toxin was required to provide notice to APHIS regarding their possession of the new agent(s) and toxin(s) by November 17, 2008. The final rule also stated that, by April 14, 2009, all previously unregistered entities must be registered and thus in compliance with the regulations.[2]

Since the publication of the final rule, some entities have notified us that they use virulent Newcastle disease virus for bird vaccines, in research on cancer treatment in humans, and as a vector of antigenic proteins that enhance immune response to cancer and to diseases (*e.g.,* influenza and avian influenza). This notice informs the public that we are extending the compliance date for registration of entities that are newly required to register to July 13, 2009, to give us additional time to determine how best to regulate those entities.

Authority: 7 U.S.C. 8401; 7 CFR 2.22, 2.80, 371.3, and 371.4.

Done in Washington, DC, this 8th day of April 2009.

Kevin Shea,

Acting Administrator, Animal and Plant Health Inspection Service.

[FR Doc. E9–8383 Filed 4–10–09; 8:45 am]

BILLING CODE 3410–34–P

[2] The compliance date in the final rule was originally published as April 14, 2008; it was corrected to April 14, 2009, in a correction published on October 27, 2008 (73 FR 63621).

DEPARTMENT OF TRANSPORTATION

Federal Aviation Administration

14 CFR Part 39

[Docket No. FAA–2008–0827; Directorate Identifier 2008–NE–26–AD; Amendment 39–15879; AD 2009–08–06]

RIN 2120–AA64

Airworthiness Directives; General Electric Company (GE) CF6–80A Series Turbofan Engines

AGENCY: Federal Aviation Administration (FAA), DOT.

ACTION: Final rule.

SUMMARY: The FAA is adopting a new airworthiness directive (AD) for GE CF6–80A series turbofan engines with certain stage 1 high-pressure turbine (HPT) rotor disks, installed. This AD requires removal from service of those stage 1 HPT rotor disks within 30 days after the effective date of the AD. This AD results from the FAA learning that those disks are susceptible to cracks developing at the aft chamfer of the blade dovetail slots. We are issuing this AD to prevent cracks developing at the aft chamfer of the blade dovetail slots that could propagate to a failure of the disk and cause an uncontained engine failure and damage to the airplane.

DATES: This AD becomes effective May 18, 2009.

ADDRESSES: The Docket Operations office is located at Docket Management Facility, U.S. Department of Transportation, 1200 New Jersey Avenue, SE., West Building Ground Floor, Room W12–140, Washington, DC 20590–0001.

FOR FURTHER INFORMATION CONTACT: Robert Green, Aerospace Engineer, Engine Certification Office, FAA, Engine and Propeller Directorate, 12 New England Executive Park, Burlington, MA 01803; e-mail: *robert.green@faa.gov*; telephone: (781) 238–7754, fax: (781) 238–7199.

SUPPLEMENTARY INFORMATION: The FAA proposed to amend 14 CFR part 39 with a proposed AD. The proposed AD applies to GE CF6–80A series turbofan engines with certain stage 1 HPT rotor disks, installed. We published the proposed AD in the **Federal Register** on September 4, 2008 (73 FR 51604). That action proposed to require removal from service of those stage 1 HPT rotor disks within 30 days after the effective date of the AD.

Examining the AD Docket

You may examine the AD docket on the Internet at *http://www.regulations.gov*; or in person at the Docket Operations office between 9 a.m. and 5 p.m., Monday through Friday, except Federal holidays. The AD docket contains this AD, the regulatory evaluation, any comments received, and other information. The street address for the Docket Operations office (telephone (800) 647–5527) is provided in the **ADDRESSES** section. Comments will be available in the AD docket shortly after receipt.

Comments

We provided the public the opportunity to participate in the development of this AD. We have considered the comment received.

Claim That Cost of Compliance Is Underestimated

One commenter, FedEx Express, claims that we greatly underestimated the actual cost of compliance with the proposed AD. The proposed AD estimated 1 work-hour of labor. The commenter states that this estimate is accurate only when the engine is already removed and disassembled to piece-part exposure of the disk. The commenter states that the true cost to an airline, both in disruption to the operation and in the subsequent unplanned engine shop visit, would vastly exceed 1 work-hour.

We agree that the cost of compliance should also cover the work-hours for an unplanned engine shop visit. We do not agree that it should factor in the cost of disruption to the operation. We are required to calculate only the direct cost to an operator, of labor and parts. We changed the cost of compliance paragraph to include an estimate for an unplanned engine shop visit.

Clarification of Unsafe Condition Statement

Since we issued the proposed AD, we clarified the unsafe condition statement as to where potential cracks could occur in the disk. We changed ''cracks developing in the bottoms of the dovetail slots'' to ''cracks developing at the aft chamfer of the blade dovetail slots.''

Conclusion

We have carefully reviewed the available data, including the comment received, and determined that air safety and the public interest require adopting the AD with the changes described previously. We have determined that these changes will neither increase the economic burden on any operator nor increase the scope of the AD.

Costs of Compliance

We estimate that this AD will affect 3 out of 316 CF6–80A series turbofan engines installed on airplanes of U.S. registry. We also estimate that it will take about 1 work-hour per engine to perform the actions if the engine is already removed and disassembled to piece-part exposure of the disk, and will take about 115 work-hours per engine for an unplanned engine shop visit. The average labor rate is $80 per work-hour. Required parts would cost about $300,000 per engine. Based on these figures, we estimate the total cost of the AD to U.S. operators to be $927,600.

Authority for This Rulemaking

Title 49 of the United States Code specifies the FAA's authority to issue rules on aviation safety. Subtitle I, Section 106, describes the authority of the FAA Administrator. Subtitle VII, Aviation Programs, describes in more detail the scope of the Agency's authority.

We are issuing this rulemaking under the authority described in Subtitle VII, Part A, Subpart III, Section 44701, ''General requirements.'' Under that section, Congress charges the FAA with promoting safe flight of civil aircraft in air commerce by prescribing regulations for practices, methods, and procedures the Administrator finds necessary for safety in air commerce. This regulation is within the scope of that authority because it addresses an unsafe condition that is likely to exist or develop on products identified in this rulemaking action.

Regulatory Findings

We have determined that this AD will not have federalism implications under Executive Order 13132. This AD will not have a substantial direct effect on the States, on the relationship between the national government and the States, or on the distribution of power and responsibilities among the various levels of government.

For the reasons discussed above, I certify that this AD:

(1) Is not a ''significant regulatory action'' under Executive Order 12866;

(2) Is not a ''significant rule'' under DOT Regulatory Policies and Procedures (44 FR 11034, February 26, 1979); and

(3) Will not have a significant economic impact, positive or negative, on a substantial number of small entities under the criteria of the Regulatory Flexibility Act.

We prepared a summary of the costs to comply with this AD and placed it in the AD Docket. You may get a copy of this summary at the address listed under **ADDRESSES.**

List of Subjects in 14 CFR Part 39

Air transportation, Aircraft, Aviation safety, Safety.

Adoption of the Amendment

■ Accordingly, under the authority delegated to me by the Administrator, the Federal Aviation Administration amends 14 CFR part 39 as follows:

PART 39—AIRWORTHINESS DIRECTIVES

■ 1. The authority citation for part 39 continues to read as follows:

Authority: 49 U.S.C. 106(g), 40113, 44701.

§ 39.13 [Amended]

■ 2. The FAA amends § 39.13 by adding the following new airworthiness directive:

2009–08–06 General Electric Company: Amendment 39–15879. Docket No. FAA–2008–0827; Directorate Identifier 2008–NE–26–AD.

Effective Date

(a) This airworthiness directive (AD) becomes effective May 18, 2009.

Affected ADs

(b) None.

Applicability

(c) This AD applies to General Electric Company (GE) CF6–80A series turbofan engines with any of the following stage 1 high-pressure turbine (HPT) rotor disk part numbers (P/Ns), installed:

(1) 1380M69G01; 1380M69G02; 1380M69G04; 1380M69G05; or 1380M69G06; or

(2) 9234M67G12; 9234M67G13; 9234M67G14; 9234M67G15; or 9234M67G16; or

(3) 9362M58G04; or

(4) 9367M45G01; 9367M45G03; 9367M45G05; 9367M45G06; 9367M45G07; or 9367M45G08.

(d) These CF6–80A series turbofan engines are installed on, but not limited to, Airbus A310–200 series and Boeing 767–200 and –300 series airplanes.

Unsafe Condition

(e) This AD results from the FAA learning that those disks are susceptible to cracks developing at the aft chamfer of the blade dovetail slots. We are issuing this AD to prevent cracks developing at the aft chamfer of the blade dovetail slots that could propagate to a failure of the disk and cause an uncontained engine failure and damage to the airplane.

Compliance

(f) You are responsible for having the actions required by this AD performed within 30 days after the effective date of this AD, unless the actions have already been done.

(g) Remove from service HPT stage 1 rotor disks identified by P/N in paragraph (c) of this AD.

Prohibition of HPT Stage 1 Rotor Disks

(h) After the effective date of this AD, do not install any of the HPT stage 1 rotor disks, listed by P/N in paragraph (c) of this AD into any engine.

Alternative Methods of Compliance

(i) The Manager, Engine Certification Office, has the authority to approve alternative methods of compliance for this AD, if requested using the procedures found in 14 CFR 39.19.

Related Information

(j) Contact Robert Green, Aerospace Engineer, Engine Certification Office, FAA, Engine and Propeller Directorate, 12 New England Executive Park, Burlington, MA 01803; e-mail: *robert.green@faa.gov*; telephone: (781) 238–7754, fax: (781) 238–7199, for more information about this AD.

Material Incorporated by Reference

(k) None.

Issued in Burlington, Massachusetts, on April 6, 2009.

Peter A. White,

Assistant Manager, Engine and Propeller Directorate, Aircraft Certification Service.

[FR Doc. E9–8263 Filed 4–10–09; 8:45 am]

BILLING CODE 4910–13–P

DEPARTMENT OF TRANSPORTATION

Federal Aviation Administration

14 CFR Part 39

[Docket No. FAA–2008–1207; Directorate Identifier 2007–NE–47–AD; Amendment 39–15880; AD 2009–08–07]

RIN 2120–AA64

Airworthiness Directives; Honeywell International Inc. ALF502L–2 and ALF502L–2C Turbofan Engines

AGENCY: Federal Aviation Administration (FAA), DOT.

ACTION: Final rule.

SUMMARY: The FAA is adopting a new airworthiness directive (AD) for Honeywell International Inc. ALF502L–2 and ALF502L–2C turbofan engines with certain high-pressure compressor (HPC) first stage discs installed. This AD requires performing a dimensional inspection to determine if excessive disc balance material was removed and a magnetic particle inspection if the disc

passes the dimensional inspection. This AD results from reports of discs found with excessive material removed from the balancing locations of the disc. We are issuing this AD to prevent the discs from fracturing before reaching the currently published life limit. A disc fracture could result in an uncontained failure of the disc and damage to the airplane.

DATES: This AD becomes effective May 18, 2009.

ADDRESSES: You can get the service information identified in this AD from Honeywell International Inc. 111 S. 34th Street, Phoenix, AZ 85034–2802, U.S.A.; telephone (800) 601–3099, Web site *http://portal.honeywell.com/wps/portal/aero*.

The Docket Operations office is located at Docket Management Facility, U.S. Department of Transportation, 1200 New Jersey Avenue, SE., West Building Ground Floor, Room W12–140, Washington, DC 20590–0001.

FOR FURTHER INFORMATION CONTACT: Robert Baitoo, Aerospace Engineer, Los Angeles Aircraft Certification Office, FAA, Transport Airplane Directorate, 3960 Paramount Blvd., Lakewood, CA 90712–4137; e-mail: *robert.baitoo@faa.gov*; telephone (562) 627–5245; fax (562) 627–5210.

SUPPLEMENTARY INFORMATION: The FAA proposed to amend 14 CFR part 39 with a proposed AD. The proposed AD applies to Honeywell International Inc. ALF502L–2 and ALF502L–2C turbofan engines with certain HPC first stage discs installed. We published the proposed AD in the **Federal Register** on November 28, 2008 (73 FR 72370). That action proposed to require performing a dimensional inspection to determine if excessive disc balance material was removed and a magnetic particle inspection if the disc passes the dimensional inspection.

Examining the AD Docket

You may examine the AD docket on the Internet at *http://www.regulations.gov*; or in person at the Docket Operations office between 9 a.m. and 5 p.m., Monday through Friday, except Federal holidays. The AD docket contains this AD, the regulatory evaluation, any comments received, and other information. The street address for the Docket Operations office (telephone (800) 647–5527) is provided in the **ADDRESSES** section. Comments will be available in the AD docket shortly after receipt.

Comments

We provided the public the opportunity to participate in the development of this AD. We received no comments on the proposal or on the determination of the cost to the public.

Conclusion

We have carefully reviewed the available data and determined that air safety and the public interest require adopting the AD as proposed.

Costs of Compliance

We estimate that this AD will affect 148 engines installed on airplanes of U.S. registry. We also estimate that it will take about 3 work-hours per engine to perform the actions, and that the average labor rate is $80 per work-hour. Required parts will cost about $21,000 per engine. Based on these figures, we estimate the total cost of the AD to U.S. operators to be $3,143,520.

Authority for This Rulemaking

Title 49 of the United States Code specifies the FAA's authority to issue rules on aviation safety. Subtitle I, Section 106, describes the authority of the FAA Administrator. Subtitle VII, Aviation Programs, describes in more detail the scope of the Agency's authority.

We are issuing this rulemaking under the authority described in Subtitle VII, Part A, Subpart III, Section 44701, ''General requirements.'' Under that section, Congress charges the FAA with promoting safe flight of civil aircraft in air commerce by prescribing regulations for practices, methods, and procedures the Administrator finds necessary for safety in air commerce. This regulation is within the scope of that authority because it addresses an unsafe condition that is likely to exist or develop on products identified in this rulemaking action.

Regulatory Findings

We have determined that this AD will not have federalism implications under Executive Order 13132. This AD will not have a substantial direct effect on the States, on the relationship between the national government and the States, or on the distribution of power and responsibilities among the various levels of government.

For the reasons discussed above, I certify that this AD:

(1) Is not a ''significant regulatory action'' under Executive Order 12866;

(2) Is not a ''significant rule'' under DOT Regulatory Policies and Procedures (44 FR 11034, February 26, 1979); and

(3) Will not have a significant economic impact, positive or negative, on a substantial number of small entities under the criteria of the Regulatory Flexibility Act.

We prepared a summary of the costs to comply with this AD and placed it in the AD Docket. You may get a copy of this summary at the address listed under **ADDRESSES**.

List of Subjects in 14 CFR Part 39

Air transportation, Aircraft, Aviation safety, Safety.

Adoption of the Amendment

■ Accordingly, under the authority delegated to me by the Administrator, the Federal Aviation Administration amends 14 CFR part 39 as follows:

PART 39—AIRWORTHINESS DIRECTIVES

■ 1. The authority citation for part 39 continues to read as follows:

Authority: 49 U.S.C. 106(g), 40113, 44701.

§ 39.13 [Amended]

■ 2. The FAA amends § 39.13 by adding the following new airworthiness directive:

2009–08–07 Honeywell International Inc. (Formerly AlliedSignal and Lycoming): Amendment 39–15880. Docket No. FAA–2008–1207; Directorate Identifier 2007–NE–47–AD.

Effective Date

(a) This airworthiness directive (AD) becomes effective May 18, 2009.

Affected ADs

(b) None.

Applicability

(c) This AD applies to Honeywell International Inc. ALF502L–2 and ALF502L–2C turbofan engines with high pressure compressor (HPC) first stage discs, part numbers (P/Ns) 2–101–331–03, 2–101–331–04, and 2–101–331–10, installed. These engines are installed on, but not limited to, Bombardier CL–600–1A11 airplanes.

Unsafe Condition

(d) This AD results from reports of discs found with excessive material removed from the balancing locations of the disc. We are issuing this AD to prevent the discs from fracturing before reaching the currently published life limit. A disc fracture could result in an uncontained failure of the disc and damage to the airplane.

Compliance

(e) You are responsible for having the actions required by this AD performed at the next shop visit, but not later than 2,500 cycles-in-service after the effective date of this AD, unless the actions have already been done.

Visual Inspection

(f) For discs with 5,000 or more cycles-since-new on the effective date of this AD, perform a dimensional inspection of the HPC first stage disc to determine if excessive disc

balance material was removed. See the following Figure 1 for limits.

BILLING CODE 4910–13–P

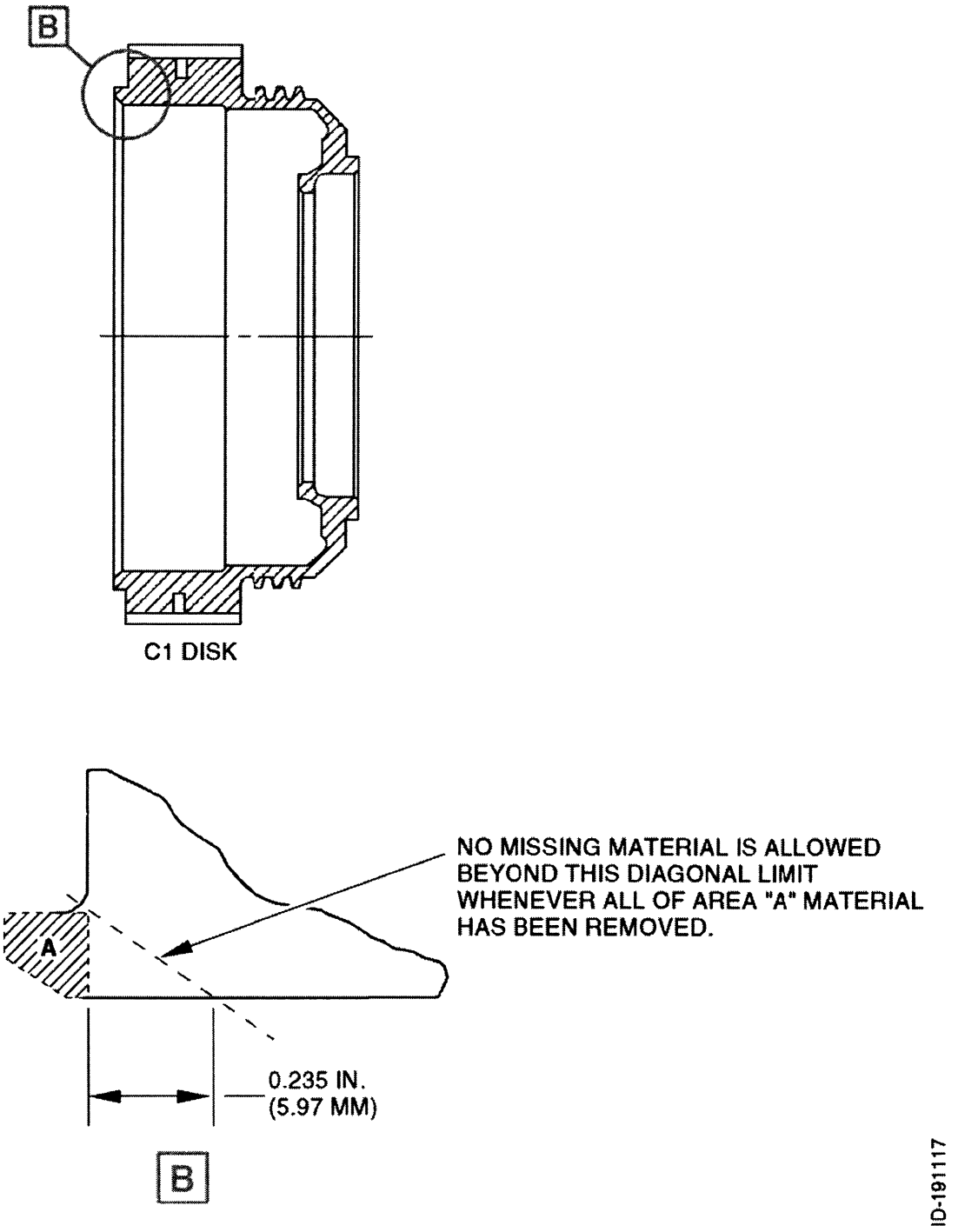

Limits for Removed Balance Material, Disc Forward Flange
Figure 1 (Sheet 1 of 2)

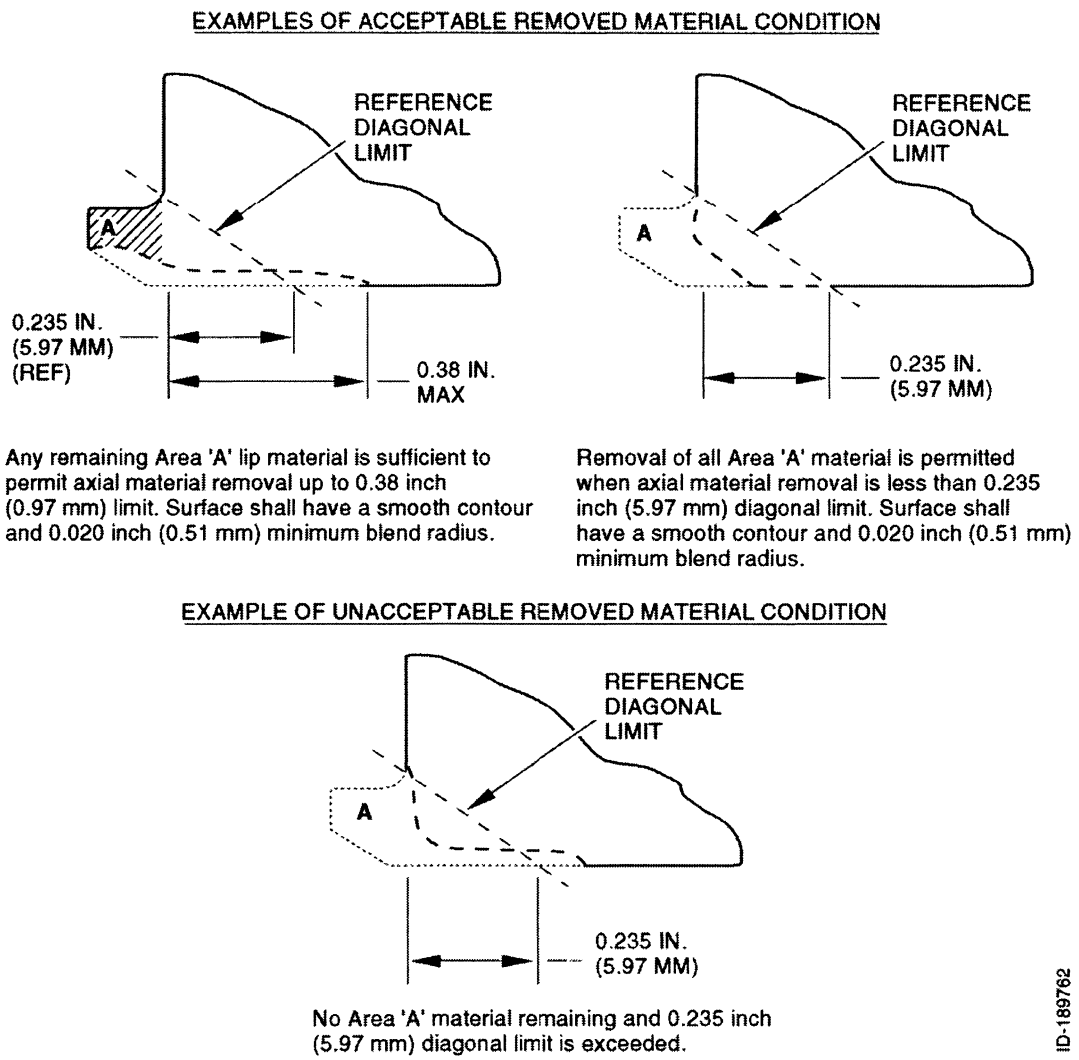

Limits for Removed Balance Material, Disc Forward Flange
Figure 1 (Sheet 2 of 2)

(g) Replace the disc if excessive disc balance material was removed. See limits in Figure 1 of this AD.

(h) If the removed balance material condition is acceptable, perform a magnetic particle inspection of the disc rim and slots for cracks using a 3 to 7 power magnification glass. The Engine Overhaul Manual, 72–34–11, Inspection/Check, contains information on the magnetic particle inspection procedure. Contact Honeywell International Inc., 111 S. 34th Street, Phoenix, AZ 85034–2802, U.S.A.; telephone (800) 601–3099, Web site *http://portal.honeywell.com/wps/portal/aero,* for a copy of this service information.

(i) Replace the disc if you find any cracks.

Alternative Methods of Compliance

(j) The Manager, Los Angeles Aircraft Certification Office, has the authority to approve alternative methods of compliance for this AD if requested using the procedures found in 14 CFR 39.19.

Related Information

(k) Honeywell Alert Service Bulletin ALF/LF A72–1102, dated April 24, 2007, contains information that pertains to the subject of this AD. Contact Honeywell International Inc., 111 S. 34th Street, Phoenix, AZ 85034–2802, U.S.A.; telephone (800) 601–3099, Web site *http://portal.honeywell.com/wps/portal/aero,* for a copy of this service information.

(l) Contact Robert Baitoo, Aerospace Engineer, Los Angeles Aircraft Certification Office, FAA, Transport Airplane Directorate, 3960 Paramount Blvd., Lakewood, CA 90712–4137; e-mail: *robert.baitoo@faa.gov;* telephone (562) 627–5245; fax (562) 627–5210, for more information about this AD.

Material Incorporated by Reference

(m) None.

Issued in Burlington, Massachusetts, on April 6, 2009.

Peter A. White,

Assistant Manager, Engine and Propeller Directorate, Aircraft Certification Service.

[FR Doc. E9–8264 Filed 4–10–09; 8:45 am]

BILLING CODE 4910–13–C

DEPARTMENT OF TRANSPORTATION

Federal Aviation Administration

14 CFR Part 95

[Docket No. 30653; Amdt. No. 479]

IFR Altitudes; Miscellaneous Amendments

AGENCY: Federal Aviation Administration (FAA), DOT.

ACTION: Final rule.

SUMMARY: This amendment adopts miscellaneous amendments to the required IFR (instrument flight rules) altitudes and changeover points for certain Federal airways, jet routes, or direct routes for which a minimum or maximum en route authorized IFR altitude is prescribed. This regulatory action is needed because of changes occurring in the National Airspace System. These changes are designed to provide for the safe and efficient use of the navigable airspace under instrument conditions in the affected areas.

DATES: *Effective Date:* 0901 UTC, March 12, 2009.

FOR FURTHER INFORMATION CONTACT: Harry Hodges, Flight Procedure Standards Branch (AMCAFS–420), Flight Technologies and Programs Division, Flight Standards Service, Federal Aviation Administration, Mike Monroney Aeronautical Center, 6500 South MacArthur Blvd., Oklahoma City, OK 73169 (Mail Address: P.O. Box 25082 Oklahoma City, OK 73125) telephone: (405) 954–4164.

SUPPLEMENTARY INFORMATION: This amendment to part 95 of the Federal Aviation Regulations (14 CFR part 95) amends, suspends, or revokes IFR altitudes governing the operation of all aircraft in flight over a specified route or any portion of that route, as well as the changeover points (COPs) for Federal airways, jet routes, or direct routes as prescribed in part 95.

The Rule

The specified IFR altitudes, when used in conjunction with the prescribed changeover points for those routes, ensure navigation aid coverage that is adequate for safe flight operations and free of frequency interference. The reasons and circumstances that create the need for this amendment involve matters of flight safety and operational efficiency in the National Airspace System, are related to published aeronautical charts that are essential to the user, and provide for the safe and efficient use of the navigable airspace. In addition, those various reasons or circumstances require making this amendment effective before the next scheduled charting and publication date of the flight information to assure its timely availability to the user. The effective date of this amendment reflects those considerations. In view of the close and immediate relationship between these regulatory changes and safety in air commerce, I find that notice and public procedure before adopting this amendment are impracticable and contrary to the public interest and that good cause exists for making the amendment effective in less than 30 days.

Conclusion

The FAA has determined that this regulation only involves an established body of technical regulations for which frequent and routine amendments are necessary to keep them operationally current. It, therefore—(1) Is not a ''significant regulatory action'' under Executive Order 12866; (2) is not a ''significant rule'' under DOT Regulatory Policies and Procedures (44 FR 11034; February 26, 1979); and (3) does not warrant preparation of a regulatory evaluation as the anticipated impact is so minimal. For the same reason, the FAA certifies that this amendment will not have a significant economic impact on a substantial number of small entities under the criteria of the Regulatory Flexibility Act.

List of Subjects in 14 CFR Part 95

Airspace, Navigation (air).

Issued in Washington, DC, on April 3, 2009.

John M. Allen,

Director, Flight Standards Service.

Adoption of the Amendment

■ Accordingly, pursuant to the authority delegated to me by the Administrator, part 95 of the Federal Aviation Regulations (14 CFR part 95) is amended as follows effective at 0901 UTC, March 12, 2009.

■ 1. The authority citation for part 95 continues to read as follows:

Authority: 49 U.S.C. 106(g), 40103, 40106, 40113, 40114, 40120, 44502, 44514, 44719, 44721.

■ 2. Part 95 is amended to read as follows:

PART 95—[AMENDED]

REVISIONS TO IFR ALTITUDES & CHANGEOVER POINTS

[Amendment 479 effective date, March 12, 2009]

From	To	MEA	MAA
§ 95.4000 HIGH ALTITUDE RNAV ROUTES			
§ 95.4254 RNAV ROUTE T254 IS ADDED TO READ			
LAKE CHARLES, LA VORTAC	CREPO, TX FIX	2200	10000
CREPO, TX FIX	EAKES, TX FIX	3100	10000
EAKES, TX FIX	COLLEGE STATION, TX VORTAC	3000	10000
COLLEGE STATION, TX VORTAC *2100—MOCA	CENTEX, TX VORTAC	*3000	10000
§ 95.6001 VICTOR ROUTES—U.S.			
§ 95.6002 VOR FEDERAL AIRWAY V2 IS AMENDED TO READ IN PART			
JAMESTOWN, ND VOR/DME *6000—MRA	*CHAFE, ND FIX	3300	.....
§ 95.6012 VOR FEDERAL AIRWAY V12 IS AMENDED TO READ IN PART			
ALLEGHENY, PA VOR/DME	MILWO, PA FIX	4000	.....
§ 95.6014 VOR FEDERAL AIRWAY V14 IS AMENDED TO READ IN PART			
#BUFFALO, NY VOR/DME #BUF R–106 UNUSABLE.	GENESEO, NY VOR/DME	4000	.....
§ 95.6018 VOR FEDERAL AIRWAY V18 IS AMENDED TO READ IN PART			
LASHE, SC FIX	NORMS, SC FIX	*3000	.....

REVISIONS TO IFR ALTITUDES & CHANGEOVER POINTS—Continued

[Amendment 479 effective date, March 12, 2009]

From	To	MEA	MAA
*2100—MOCA			
§ 95.6026 VOR FEDERAL AIRWAY V26 IS AMENDED TO READ IN PART			
CHEROKEE, WY VOR/DME	*ALCOS, WY FIX	11600	
*9900—MRA			
*ALCOS, WY FIX	MUDDY MOUNTAIN, WY VORTAC		
	NE BND	**8400	
	SW BND	**9700	
*9900—MRA			
**7900—MOCA			
§ 95.6037 VOR FEDERAL AIRWAY V37 IS AMENDED TO READ IN PART			
ALLENDALE, SC VOR	COLUMBIA, SC VORTAC	*3000	
*2000—GNSS MEA			
§ 95.6070 VOR FEDERAL AIRWAY V70 IS AMENDED TO READ IN PART			
PALACIOS, TX VORTAC	SCHOLES, TX VORTAC	2600	
§ 95.6084 VOR FEDERAL AIRWAY V84 IS AMENDED TO READ IN PART			
#BUFFALO, NY VOR/DME	GENESEO, NY VOR/DME	4000	
#BUF R–106 UNUSABLE.			
§ 95.6129 VOR FEDERAL AIRWAY V129 IS AMENDED TO READ IN PART			
EAU CLAIRE, WI VORTAC	DULUTH, MN VORTAC	*4000	
*3100—MOCA			
§ 95.6139 VOR FEDERAL AIRWAY V139 IS AMENDED TO READ IN PART			
PLUME, NJ FIX	*KOPPY, NY FIX	**4000	
*5000—MRA			
**3000—MOCA			
**3000—GNSS MEA			
*KOPPY, NY FIX	BEADS, NY FIX	**4000	
*5000—MRA			
**3000—MOCA			
**3000—GNSS MEA			
§ 95.6170 VOR FEDERAL AIRWAY V170 IS AMENDED TO READ IN PART			
WORTHINGTON, MN VOR/DME	FAIRMONT, MN VOR/DME	3300	
§ 95.6250 VOR FEDERAL AIRWAY V250 IS AMENDED TO READ IN PART			
WORTHINGTON, MN VOR/DME	MANKATO, MN VOR/DME	3400	
§ 95.6268 VOR FEDERAL AIRWAY V268 IS AMENDED TO READ IN PART			
PLUME, NJ FIX	*KOPPY, NY FIX	**4000	
*5000—MRA			
**3000—MOCA			
**3000—GNSS MEA			
*KOPPY, NY FIX	BEADS, NY FIX	**4000	
*5000—MRA			
**3000—MOCA			
**3000—GNSS MEA			
§ 95.6286 VOR FEDERAL AIRWAY V286 IS AMENDED TO READ IN PART			
BROOKE, VA VORTAC	ZUNAR, VA FIX	3000	
ZUNAR, VA FIX	GWYNN, VA FIX	2000	
GWYNN, VA FIX	CAPE CHARLES, VA VORTAC	*2000	
*1500—MOCA			
§ 95.6308 VOR FEDERAL AIRWAY V308 IS AMENDED TO READ IN PART			
NOTTINGHAM, MD VORTAC	*BILIT, MD FIX	**6000	
*6000—MCA BILIT, MD FIX, W BND			

REVISIONS TO IFR ALTITUDES & CHANGEOVER POINTS—Continued

[Amendment 479 effective date, March 12, 2009]

From	To	MEA	MAA
**1600—MOCA			
**2000—GNSS MEA			
BILIT, MD FIX	WATERLOO, DE VOR/DME	*2000	
*1500—MOCA			
PLUME, NJ FIX	*KOPPY, NY FIX	**4000	
*5000—MRA			
**3000—MOCA			
**3000—GNSS MEA			
*KOPPY, NY FIX	BEADS, NY FIX	**4000	
*5000—MRA			
**3000—MOCA			
**3000—GNSS MEA			
§ 95.6345 VOR FEDERAL AIRWAY V345 IS AMENDED TO READ IN PART			
EAU CLAIRE, WI VORTAC	*HOMLO, WI FIX	**5200	
*10000—MRA			
**3100—MOCA			
**4000—GNSS MEA			
*HOMLO, WI FIX	HAYWARD, WI VOR/DME	**10000	
*10000—MRA			
**3100—MOCA			
**4000—GNSS MEA			
HAYWARD, WI VOR/DME	*GRASS, WI FIX	#**10000	
*6000—MRA			
**3000—MOCA			
**4000—GNSS MEA			
#UNUSABLE BELOW 10000.			
*GRASS, WI FIX	ASHLAND, WI VOR/DME	**4000	
*6000—MRA			
**2900—MOCA			
**3000—GNSS MEA			
§ 95.6362 VOR FEDERAL AIRWAY V362 IS AMENDED TO READ IN PART			
BRUNSWICK, GA VORTAC	*HABLE, GA FIX	**3000	
*10000—MCA HABLE, GA FIX, NW BND			
**1700—MOCA			
HABLE, GA FIX	ALMA, GA VORTAC	*10000	
*1700—MOCA			
*3000—GNSS MEA			
§ 95.6394 VOR FEDERAL AIRWAY V394 IS AMENDED TO READ IN PART			
DAGGETT, CA VORTAC	OASYS, NV FIX	*12000	
*9500—MOCA			
*10000—GNSS MEA			
§ 95.6500 VOR FEDERAL AIRWAY V500 IS AMENDED TO READ IN PART			
NEWBERG, OR VOR/DME	GLARA, OR FIX	4000	
GLARA, OR FIX	*HARZL, OR FIX		
	W BND	**7200	
	E BND	**10000	
*7200—MRA			
**6600—MOCA			
**7000—GNSS MEA			
*HARZL, OR FIX	RATZZ, OR FIX		
	E BND	**10000	
	W BND	**8000	
*7200—MRA			
**7400—MOCA			
**8000—GNSS MEA			
RATZZ, OR FIX	*GASHE, OR FIX	**10000	
*10000—MRA			
**8000—MOCA			
**8000—GNSS MEA			
*GASHE, OR FIX	KIMBERLY, OR VORTAC	**9200	
*10000—MRA			
**8200—MOCA			

REVISIONS TO IFR ALTITUDES & CHANGEOVER POINTS—Continued

[Amendment 479 effective date, March 12, 2009]

From	To	MEA	MAA
§ 95.6510 VOR FEDERAL AIRWAY V510 IS AMENDED TO READ IN PART			
JAMESTOWN, ND VOR/DME *6000—MRA	*CHAFE, ND FIX	3300	.....
§ 95.6562 VOR FEDERAL AIRWAY V562 IS AMENDED TO READ IN PART			
*FERER, AZ FIX *12000—MRA **9200—MOCA	DRAKE, AZ VORTAC	**10000	.....
§ 95.6567 VOR FEDERAL AIRWAY V567 IS AMENDED TO READ IN PART			
*FERER, AZ FIX *12000—MRA **10000—GNSS MEA	WINSLOW, AZ VORTAC	**14000	.....
§ 95.6589 VOR FEDERAL AIRWAY V589 IS AMENDED TO READ IN PART			
MEDICINE BOW, WY VOR/DME *9900—MRA	*ALCOS, WY FIX	9900	.....
*ALCOS, WY FIX	MUDDY MOUNTAIN, WY VORTAC	.....	.....
	NE BND	**8400	.....
	SW BND	**9700	.....
*9900—MRA **7900—MOCA			
§ 95.6605 VOR FEDERAL AIRWAY V605 IS AMENDED TO READ IN PART			
HOLSTON MOUNTAIN, TN VORTAC *15000—MRA	*GENOD, NC FIX	8500	.....
*GENOD, NC FIX	SPARTANBURG, SC VORTAC	**15000	.....
*15000—MRA **4200—MOCA **5000—GNSS MEA			
§ 95.6319 ALASKA VOR FEDERAL AIRWAY V319 IS AMENDED TO READ IN PART			
EYAKS, AK FIX *4800—MCA JOHNSTONE POINT, AK VOR/DME, E BND	*JOHNSTONE POINT, AK VOR/DME	5000	.....
JOHNSTONE POINT, AK VOR/DME *8000—MCA EDELE, AK FIX, W BND	*EDELE, AK FIX	4400	.....
EDELE, AK FIX	WILER, AK FIX	.....	.....
	W BND	*10000	.....
	E BND	*8000	.....
*5900—MOCA *6000—GNSS MEA			
§ 95.7001 JET ROUTES **§ 95.7042 JET ROUTE J42 IS AMENDED TO READ IN PART**			
FOUNT, KY FIX *18000—GNSS MEA	TONIO, KY FIX	*20000	35000
TONIO, KY FIX *18000—GNSS MEA #BKW R–257 UNUSABLE	#BECKLEY, WV VORTAC	*18000	35000
§ 95.7083 JET ROUTE J83 IS AMENDED TO READ IN PART			
#APPLETON, OH VORTAC #APE R–021 UNUSABLE.	DRYER, OH VOR/DME	18000	45000

From	To	Changeover points	
		Distance	From
§ 95.8003 VOR FEDERAL AIRWAY CHANGEOVER POINTS AIRWAY SEGMENT V2 IS AMENDED TO DELETE CHANGEOVER POINT			
ROCHESTER, NY VOR/DME	ROCHESTER, NY VOR/DME	13	Rochester

From	To	Changeover points	
		Distance	From
V20 IS AMENDED TO ADD CHANGEOVER POINT			
PALACIOS, TX VORTAC	HOBBY TX VOR/DME	41	Palacios
V166 IS AMENDED TO ADD CHANGEOVER POINT			
WESTMINSTER, MD VORTAC	DUPONT, DE VORTAC	40	Westminster

[FR Doc. E9–8365 Filed 4–10–09; 8:45 am]
BILLING CODE 4910–13–P

DEPARTMENT OF THE TREASURY

Office of Foreign Assets Control

31 CFR Part 543

Persons Contributing to the Conflict in Côte d'Ivoire Sanctions Regulations

AGENCY: Office of Foreign Assets Control, Treasury.

ACTION: Final rule.

SUMMARY: The Department of the Treasury's Office of Foreign Assets Control (''OFAC'') is adding a new part to the Code of Federal Regulations to implement Executive Order 13396 of February 7, 2006, ''Blocking Property of Certain Persons Contributing to the Conflict in Côte d'Ivoire.''

DATES: *Effective Date:* April 13, 2009.

FOR FURTHER INFORMATION CONTACT: Assistant Director for Compliance, Outreach & Implementation, tel.: 202/622–2490, Assistant Director for Licensing, tel.: 202/622–2480, Assistant Director for Policy, tel.: 202/622–4855, Office of Foreign Assets Control, or Chief Counsel (Foreign Assets Control), tel.: 202/622–2410, Office of the General Counsel, Department of the Treasury (not toll free numbers).

SUPPLEMENTARY INFORMATION:

Electronic and Facsimile Availability

This document and additional information concerning OFAC are available from OFAC's Web site (*http://www.treas.gov/ofac*) or via facsimile through a 24-hour fax-on demand service, tel.: (202) 622–0077.

Background

On February 7, 2006, the President, invoking the authority of, *inter alia*, the International Emergency Economic Powers Act (50 U.S.C. 1701–1706) (''IEEPA'') and section 5 of the United Nations Participation Act (22 U.S.C. 287c), issued Executive Order 13396 (71 FR 7389, February 10, 2006) (''E.O. 13396''), effective at 12:01 a.m. eastern standard time on February 8, 2006. In E.O. 13396, the President determined that the situation in Côte d'Ivoire, which has resulted in the massacre of large numbers of civilians, widespread human rights abuses, significant political violence and unrest, and attacks against international peacekeeping forces leading to fatalities, constitutes an unusual and extraordinary threat to the national security and foreign policy of the United States, and declared a national emergency to deal with that threat. E.O. 13396 also noted United Nations Security Council Resolution 1572 of November 15, 2004, which, *inter alia*, called on member states to impose an asset freeze on certain persons contributing to the conflict in Côte d'Ivoire.

Section 1(a) of E.O. 13396 blocks, with certain exceptions, all property and interests in property that are in the United States, that come within the United States, or that are or come within the possession or control of United States persons, of: (1) The persons listed in the Annex to E.O. 13396; and (2) any person determined by the Secretary of the Treasury, after consultation with the Secretary of State:

- To constitute a threat to the peace and national reconciliation process in Côte d'Ivoire, such as by blocking the implementation of the Linas-Marcoussis Agreement of January 24, 2003, the Accra III Agreement of July 30, 2004, and the Pretoria Agreement of April 6, 2005;
- To be responsible for serious violations of international law in Côte d'Ivoire;
- To have directly or indirectly supplied, sold, or transferred to Côte d'Ivoire arms or any related materiel or any assistance, advice, or training related to military activities;
- To have publicly incited violence and hatred contributing to the conflict in Côte d'Ivoire;
- To have materially assisted, sponsored, or provided financial, material, or technological support for, or goods or services in support of, the activities described above or any person listed in or designated pursuant to E.O. 13396; or
- To be owned or controlled by, or acting or purporting to act for or on behalf of, directly or indirectly, any person listed in or designated pursuant to E.O. 13396.

In Section 1(b) of E.O. 13396, the President determined that the making of donations of certain articles, such as food, clothing, and medicine intended to be used to relieve human suffering, as specified in section 203(b)(2) of IEEPA (50 U.S.C. 1702(b)(2)) by, to, or for the benefit of, any person whose property and interests in property are blocked pursuant to E.O. 13396 would seriously impair his ability to deal with the national emergency declared in E.O. 13396, and the President therefore prohibited such donations. Accordingly, the donation of such items is prohibited, unless authorized by OFAC.

Section 1(c) of E.O. 13396 provides that the prohibition on any transaction or dealing by a United States person or within the United States in blocked property or interests in property includes, but is not limited to, the making of any contribution or provision of funds, goods, or services by, to, or for the benefit of, any person whose property and interests in property are blocked pursuant to E.O. 13396, and the receipt of any contribution or provision of funds, goods, or services from any such person.

Section 2 of E.O. 13396 prohibits any transaction by a United States person or within the United States that evades or avoids, or has the purpose of evading or avoiding, or attempts to violate any of the prohibitions set forth in E.O. 13396, as well as any conspiracy formed to violate such prohibitions.

Section 5 of E.O. 13396 authorizes the Secretary of the Treasury, after consultation with the Secretary of State, to take such actions, including the promulgation of rules and regulations, as may be necessary to carry out the purposes of E.O. 13396. In furtherance of these purposes, OFAC is promulgating these Persons Contributing to the Conflict in Côte d'Ivoire Sanctions Regulations, 31 CFR Part 543 (the ''Regulations''). As

described above, these sanctions are targeted sanctions directed at certain persons who contribute to the conflict in Côte d'Ivoire. The sanctions are not directed against the country of Côte d'Ivoire or the Government of Côte d'Ivoire. They do not generally prohibit trade or the provision of banking or other financial services to the country of Côte d'Ivoire, unless the transaction or service in question involves a person whose property and interests in property are blocked pursuant to § 543.201(a).

Subpart B of the Regulations implements the prohibitions contained in sections 1 and 2 of E.O. 13396. *See, e.g.,* §§ 543.201 and 543.205. Persons identified in the Annex to E.O. 13396, designated by or under the authority of the Secretary of the Treasury pursuant to E.O. 13396, or otherwise subject to the blocking provisions of E.O. 13396 are referred to throughout the Regulations as ''persons whose property and interests in property are blocked pursuant to § 543.201(a).'' The names of persons listed in or designated pursuant to E.O. 13396 are or will be published on OFAC's Specially Designated Nationals and Blocked Persons List, which is accessible via OFAC's Web site and can be found at Appendix A to 31 CFR chapter V. Those names also have been or will be published in the **Federal Register**.

Sections 543.202 and 543.203 of subpart B detail the effect of transfers of blocked property in violation of the Regulations and set forth the requirement to hold blocked funds, such as currency, bank deposits, or liquidated financial obligations, in interest-bearing blocked accounts. Section 543.204 of subpart B provides that all expenses incident to the maintenance of blocked physical property shall be the responsibility of the owners or operators of such property, and that such expenses shall not be met from blocked funds, unless otherwise authorized. The section further provides that blocked property may, in OFAC's discretion, be sold or liquidated and the net proceeds placed in a blocked interest-bearing account in the name of the owner of the property.

Section 543.205 implements the prohibitions of E.O. 13396 on any transaction by a United States person or within the United States that evades or avoids, has the purpose of evading or avoiding, or attempts to violate any of the prohibitions set forth in E.O. 13396, and on any conspiracy formed to violate such prohibitions.

Subpart C of part 543 defines key terms used throughout the Regulations, and subpart D sets forth interpretive sections regarding the general prohibitions contained in subpart B. Section 543.411 sets out the rule that the property and interests in property of an entity are blocked if the entity is 50 percent or more owned by a person whose property and interests in property are blocked, whether or not the entity itself is listed in or designated pursuant to E.O. 13396.

Transactions otherwise prohibited under part 543 but found to be consistent with U.S. policy may be authorized by one of the general licenses contained in subpart E or by a specific license issued pursuant to the procedures described in subpart E of part 501 of 31 CFR chapter V. Subpart E of part 543 also contains certain statements of licensing policy in addition to the general licenses.

Subpart F of part 543 refers to subpart C of part 501 for applicable recordkeeping and reporting requirements. Subpart G describes the civil and criminal penalties applicable to violations of the Regulations, as well as the procedures governing the potential imposition of a civil monetary penalty. Subpart G also refers to Appendix A of part 501 for a more complete description of these procedures.

Subpart H of part 543 refers to subpart E of part 501 for applicable provisions relating to administrative procedures and contains a delegation of authority by the Secretary of the Treasury. Subpart I of the Regulations sets forth a Paperwork Reduction Act notice.

Public Participation

Because the Regulations involve a foreign affairs function, the provisions of Executive Order 12866 and the Administrative Procedure Act (5 U.S.C. 553) requiring notice of proposed rulemaking, opportunity for public participation, and delay in effective date are inapplicable. Because no notice of proposed rulemaking is required for this rule, the Regulatory Flexibility Act (5 U.S.C. 601–612) does not apply.

Paperwork Reduction Act

The collections of information related to the Regulations are contained in 31 CFR part 501 (the ''Reporting, Procedures and Penalties Regulations''). Pursuant to the Paperwork Reduction Act of 1995 (44 U.S.C. 3507), those collections of information have been approved by the Office of Management and Budget under control number 1505–0164. An agency may not conduct or sponsor, and a person is not required to respond to, a collection of information unless the collection of information displays a valid control number.

List of Subjects in 31 CFR Part 543

Administrative practice and procedure, Banks, Banking, Blocking of assets, Côte d'Ivoire, Credit, Foreign Trade, Penalties, Reporting and recordkeeping requirements, Securities, Services.

■ For the reasons set forth in the preamble, the Department of the Treasury's Office of Foreign Assets Control adds part 543 to 31 CFR Chapter V to read as follows:

PART 543—PERSONS CONTRIBUTING TO THE CONFLICT IN CÔTE D'IVOIRE SANCTIONS REGULATIONS

Subpart A—Relation of This Part to Other Laws and Regulations

Sec.

543.101 Relation of this part to other laws and regulations.

Subpart B—Prohibitions

543.201 Prohibited transactions involving blocked property.
543.202 Effect of transfers violating the provisions of this part.
543.203 Holding of funds in interest-bearing accounts; investment and reinvestment.
543.204 Expenses of maintaining blocked physical property; liquidation of blocked property.
543.205 Evasions; attempts; conspiracies.

Subpart C—General Definitions

543.301 Arms or any related materiel.
543.302 Blocked account; blocked property.
543.303 Effective date.
543.304 Entity.
543.305 Interest.
543.306 Licenses; general and specific.
543.307 Person.
543.308 Property; property interest.
543.309 Transfer.
543.310 United States.
543.311 U.S. financial institution.
543.312 United States person; U.S. person.

Subpart D—Interpretations

543.401 Reference to amended sections.
543.402 Effect of amendment.
543.403 Termination and acquisition of an interest in blocked property.
543.404 Transactions ordinarily incident to a licensed transaction.
543.405 Provision of services.
543.406 Offshore transactions.
543.407 Payments from blocked accounts to satisfy obligations prohibited.
543.408 Charitable contributions.
543.409 Credit extended and cards issued by U.S. financial institutions.
543.410 Setoffs prohibited.
543.411 Entities owned by a person whose property and interests in property are blocked.

Subpart E—Licenses, Authorizations, and Statements of Licensing Policy

543.501 General and specific licensing procedures.
543.502 Effect of license or authorization.

543.503 Exclusion from licenses.
543.504 Payments and transfers to blocked accounts in U.S. financial institutions.
543.505 Entries in certain accounts for normal service charges authorized.
543.506 Investment and reinvestment of certain funds.
543.507 Provision of certain legal services authorized.
543.508 Authorization of emergency medical services.

Subpart F—Reports

543.601 Records and reports.

Subpart G—Penalties

543.701 Penalties.
543.702 Pre-Penalty Notice; settlement.
543.703 Penalty imposition.
543.704 Administrative collection; referral to United States Department of Justice.

Subpart H—Procedures

543.801 Procedures.
543.802 Delegation by the Secretary of the Treasury.

Subpart I—Paperwork Reduction Act

543.901 Paperwork Reduction Act notice.

Authority: 3 U.S.C. 301; 31 U.S.C. 321(b); 50 U.S.C. 1601–1651, 1701–1706; 22 U.S.C. 287c; Pub. L. 101–410, 104 Stat. 890 (28 U.S.C. 2461 note); Pub. L. 110–96, 121 Stat. 1011; E.O. 13396, 71 FR 7389, 3 CFR, 2006 Comp., p. 209.

Subpart A—Relation of This Part to Other Laws and Regulations

§ 543.101 Relation of this part to other laws and regulations.

This part is separate from, and independent of, the other parts of this chapter, with the exception of part 501 of this chapter, the recordkeeping and reporting requirements and license application and other procedures of which apply to this part. Actions taken pursuant to part 501 of this chapter with respect to the prohibitions contained in this part are considered actions taken pursuant to this part. Differing foreign policy and national security circumstances may result in differing interpretations of similar language among the parts of this chapter. No license or authorization contained in or issued pursuant to those other parts authorizes any transaction prohibited by this part. No license or authorization contained in or issued pursuant to any other provision of law or regulation authorizes any transaction prohibited by this part. No license or authorization contained in or issued pursuant to this part relieves the involved parties from complying with any other applicable laws or regulations.

Subpart B—Prohibitions

§ 543.201 Prohibited transactions involving blocked property.

(a) Except as authorized by regulations, orders, directives, rulings, instructions, licenses, or otherwise, and notwithstanding any contracts entered into or any license or permit granted prior to the effective date, all property and interests in property that are in the United States, that hereafter come within the United States, or that are or hereafter come within the possession or control of U.S. persons, including their overseas branches, of the following persons are blocked and may not be transferred, paid, exported, withdrawn, or otherwise dealt in:

(1) Any person listed in the Annex to Executive Order 13396 of February 7, 2006 (71 FR 7389, February 10, 2006); and

(2) Any person determined by the Secretary of the Treasury, after consultation with the Secretary of State:

(i) To constitute a threat to the peace and national reconciliation process in Côte d'Ivoire, such as by blocking the implementation of the Linas-Marcoussis Agreement of January 24, 2003, the Accra III Agreement of July 30, 2004, and the Pretoria Agreement of April 6, 2005;

(ii) To be responsible for serious violations of international law in Côte d'Ivoire;

(iii) To have directly or indirectly supplied, sold, or transferred to Côte d'Ivoire arms or any related materiel or any assistance, advice, or training related to military activities;

(iv) To have publicly incited violence and hatred contributing to the conflict in Côte d'Ivoire;

(v) To have materially assisted, sponsored, or provided financial, material, or technological support for, or goods or services in support of, the activities described in paragraphs (a)(2)(i) through (a)(2)(iv) of this section or any person whose property or interests in property are blocked pursuant to this paragraph (a); or

(vi) To be owned or controlled by, or acting or purporting to act for or on behalf of, directly or indirectly, any person whose property and interests in property are blocked pursuant to this paragraph (a).

Note to paragraph (a) of § 543.201: 1. The names of persons listed in or designated pursuant to Executive Order 13396, whose property and interests in property are blocked pursuant to paragraph (a) of this section, are published on the Office of Foreign Assets Control's Specially Designated Nationals and Blocked Persons List (''SDN List'') (which is accessible via the Office of Foreign Assets Control's Web site), published in the **Federal Register**, and incorporated into Appendix A to this chapter with the identifier ''[COTED].'' See § 543.411 concerning entities that may not be listed on the SDN list but whose property and interests in property are nevertheless blocked pursuant to paragraph (a) of this section.

2. Section 203 of the International Emergency Economic Powers Act (50 U.S.C. 1701–1706) (''IEEPA'') explicitly authorizes the blocking of property and interests in property of a person during the pendency of an investigation. The names of persons whose property and interests in property are blocked pending investigation pursuant to this part also are published on the SDN List, published in the **Federal Register** and incorporated into Appendix A to this chapter with the identifier ''[BPI–COTED].''

3. Sections 501.806 and 501.807 of this chapter V describe the procedures to be followed by persons seeking, respectively, the unblocking of funds that they believe were blocked due to mistaken identity, or administrative reconsideration of their status as persons whose property and interests in property are blocked pursuant to paragraph (a) of this section.

(b) The prohibitions in paragraph (a) of this section include, but are not limited to, prohibitions on the following transactions when engaged in by a United States person or within the United States:

(1) The making of any contribution or provision of funds, goods, or services by, to, or for the benefit of any person whose property and interests in property are blocked pursuant to paragraph (a) of this section; and

(2) The receipt of any contribution or provision of funds, goods, or services from any person whose property and interests in property are blocked pursuant to paragraph (a) of this section.

(c) Unless otherwise authorized by this part or by a specific license expressly referring to this section, any dealing in any security (or evidence thereof) held within the possession or control of a U.S. person and either registered or inscribed in the name of, or known to be held for the benefit of, or issued by, any person whose property and interests in property are blocked pursuant to paragraph (a) of this section is prohibited. This prohibition includes but is not limited to the transfer (including the transfer on the books of any issuer or agent thereof), disposition, transportation, importation, exportation, or withdrawal of, or the endorsement or guaranty of signatures on, any such security on or after the effective date. This prohibition applies irrespective of the fact that at any time (whether prior to, on, or subsequent to the effective date) the registered or inscribed owner of any such security may have or might

appear to have assigned, transferred, or otherwise disposed of the security.

§ 543.202 Effect of transfers violating the provisions of this part.

(a) Any transfer after the effective date that is in violation of any provision of this part or of any regulation, order, directive, ruling, instruction, or license issued pursuant to this part, and that involves any property or interest in property blocked pursuant to § 543.201(a), is null and void and shall not be the basis for the assertion or recognition of any interest in or right, remedy, power, or privilege with respect to such property or property interests.

(b) No transfer before the effective date shall be the basis for the assertion or recognition of any right, remedy, power, or privilege with respect to, or any interest in, any property or interest in property blocked pursuant to § 543.201(a), unless the person who holds or maintains such property, prior to that date, had written notice of the transfer or by any written evidence had recognized such transfer.

(c) Unless otherwise provided, an appropriate license or other authorization issued by or pursuant to the direction or authorization of the Director of the Office of Foreign Assets Control before, during, or after a transfer shall validate such transfer or make it enforceable to the same extent that it would be valid or enforceable but for the provisions of IEEPA, Executive Order 13396, this part, and any regulation, order, directive, ruling, instruction, or license issued pursuant to this part.

(d) Transfers of property that otherwise would be null and void or unenforceable by virtue of the provisions of this section shall not be deemed to be null and void or unenforceable as to any person with whom such property is or was held or maintained (and as to such person only) in cases in which such person is able to establish to the satisfaction of the Director of the Office of Foreign Assets Control each of the following:

(1) Such transfer did not represent a willful violation of the provisions of this part by the person with whom such property is or was held or maintained (and as to such person only);

(2) The person with whom such property is or was held or maintained did not have reasonable cause to know or suspect, in view of all the facts and circumstances known or available to such person, that such transfer required a license or authorization issued pursuant to this part and was not so licensed or authorized, or, if a license or authorization did purport to cover the transfer, that such license or authorization had been obtained by misrepresentation of a third party or withholding of material facts or was otherwise fraudulently obtained; and

(3) The person with whom such property is or was held or maintained filed with the Office of Foreign Assets Control a report setting forth in full the circumstances relating to such transfer promptly upon discovery that:

(i) Such transfer was in violation of the provisions of this part or any regulation, ruling, instruction, license, or other directive or authorization issued pursuant to this part;

(ii) Such transfer was not licensed or authorized by the Director of the Office of Foreign Assets Control; or

(iii) If a license did purport to cover the transfer, such license had been obtained by misrepresentation of a third party or withholding of material facts or was otherwise fraudulently obtained.

Note to paragraph (d) of § 543.202: The filing of a report in accordance with the provisions of paragraph (d)(3) of this section shall not be deemed evidence that the terms of paragraphs (d)(1) and (d)(2) of this section have been satisfied.

(e) Unless licensed pursuant to this part, any attachment, judgment, decree, lien, execution, garnishment, or other judicial process is null and void with respect to any property in which, on or since the effective date, there existed an interest of a person whose property and interests in property are blocked pursuant to § 543.201(a).

§ 543.203 Holding of funds in interest-bearing accounts; investment and reinvestment.

(a) Except as provided in paragraphs (c) or (d) of this section, or as otherwise directed by the Office of Foreign Assets Control, any U.S. person holding funds, such as currency, bank deposits, or liquidated financial obligations, subject to § 543.201(a) shall hold or place such funds in a blocked interest-bearing account located in the United States.

(b)(1) For purposes of this section, the term *blocked interest-bearing account* means a blocked account:

(i) In a federally-insured U.S. bank, thrift institution, or credit union, provided the funds are earning interest at rates that are commercially reasonable; or

(ii) With a broker or dealer registered with the Securities and Exchange Commission under the Securities Exchange Act of 1934 (15 U.S.C. 78a *et seq.*), provided the funds are invested in a money market fund or in U.S. Treasury bills.

(2) For purposes of this section, a rate is commercially reasonable if it is the rate currently offered to other depositors on deposits or instruments of comparable size and maturity.

(3) Funds held or placed in a blocked account pursuant to this paragraph (b) may not be invested in instruments the maturity of which exceeds 180 days. If interest is credited to a separate blocked account or subaccount, the name of the account party on each account must be the same.

(c) Blocked funds held in instruments the maturity of which exceeds 180 days at the time the funds become subject to § 543.201(a) may continue to be held until maturity in the original instrument, provided any interest, earnings, or other proceeds derived therefrom are paid into a blocked interest-bearing account in accordance with paragraphs (b) or (d) of this section.

(d) Blocked funds held in accounts or instruments outside the United States at the time the funds become subject to § 543.201(a) may continue to be held in the same type of accounts or instruments, provided the funds earn interest at rates that are commercially reasonable.

(e) This section does not create an affirmative obligation for the holder of blocked tangible property, such as chattels or real estate, or of other blocked property, such as debt or equity securities, to sell or liquidate such property. However, the Office of Foreign Assets Control may issue licenses permitting or directing such sales or liquidation in appropriate cases.

(f) Funds subject to this section may not be held, invested, or reinvested in a manner that provides immediate financial or economic benefit or access to any person whose property and interests in property are blocked pursuant to § 543.201(a), nor may their holder cooperate in or facilitate the pledging or other attempted use as collateral of blocked funds or other assets.

§ 543.204 Expenses of maintaining blocked physical property; liquidation of blocked property.

(a) Except as otherwise authorized, and notwithstanding the existence of any rights or obligations conferred or imposed by any international agreement or contract entered into or any license or permit granted prior to the effective date, all expenses incident to the maintenance of physical property blocked pursuant to § 543.201(a) shall be the responsibility of the owners or operators of such property, which expenses shall not be met from blocked funds.

(b) Property blocked pursuant to § 543.201(a) may, in the discretion of the Office of Foreign Assets Control, be sold or liquidated and the net proceeds placed in a blocked interest-bearing account in the name of the owner of the property.

§ 543.205 Evasions; attempts; conspiracies.

(a) Except as otherwise authorized, and notwithstanding any contract entered into or any license or permit granted prior to the effective date, any transaction by a U.S. person or within the United States on or after the effective date that evades or avoids, has the purpose of evading or avoiding, or attempts to violate any of the prohibitions set forth in this part is prohibited.

(b) Except as otherwise authorized, and notwithstanding any contract entered into or any license or permit granted prior to the effective date, any conspiracy formed to violate the prohibitions set forth in this part is prohibited.

Subpart C—General Definitions

§ 543.301 Arms or any related materiel.

The term *arms or any related materiel* means arms or related materiel of all types, including military aircraft and equipment, but excludes:

(a) Supplies and technical assistance intended solely for the support of or use by the United Nations Operation in Côte d'Ivoire and forces of France who support them;

(b) Supplies of non-lethal military equipment intended solely for humanitarian or protective use, and related technical assistance and training;

(c) Supplies of protective clothing, including flak jackets and military helmets, temporarily exported to Côte d'Ivoire for use by United Nations personnel, representatives of the media, and humanitarian and development workers and associated personnel, for their personal use only;

(d) Supplies temporarily exported to Côte d'Ivoire to the forces of a country that is taking action solely and directly to facilitate the evacuation of its nationals and those for whom it has consular responsibility in Côte d'Ivoire; and

(e) Supplies of arms and related materiel and technical training and assistance intended solely for support of or use in the process of restructuring defense and security forces pursuant to paragraph 3, subparagraph (f) of the Linas-Marcoussis Agreement.

§ 543.302 Blocked account; blocked property.

The terms *blocked account* and *blocked property* shall mean any account or property subject to the prohibitions in § 543.201 held in the name of a person whose property and interests in property are blocked pursuant to § 543.201(a), or in which such person has an interest, and with respect to which payments, transfers, exportations, withdrawals, or other dealings may not be made or effected except pursuant to an authorization or license from the Office of Foreign Assets Control expressly authorizing such action.

Note to § 543.302: See § 543.411 concerning the blocked status of property and interests in property of an entity that is 50 percent or more owned by a person whose property and interests in property are blocked pursuant to § 543.201(a).

§ 543.303 Effective date.

The term *effective date* refers to the effective date of the applicable prohibitions and directives contained in this part as follows:

(a) With respect to a person whose property and interests in property are blocked pursuant to § 543.201(a)(1), 12:01 a.m. eastern standard time, February 8, 2006;

(b) With respect to a person whose property and interests in property are blocked pursuant to § 543.201(a)(2), the earlier of the date of actual or constructive notice of such person's designation.

§ 543.304 Entity.

The term *entity* means a partnership, association, trust, joint venture, corporation, group, subgroup, or other organization.

§ 543.305 Interest.

Except as otherwise provided in this part, the term *interest*, when used with respect to property (e.g., ''an interest in property''), means an interest of any nature whatsoever, direct or indirect.

§ 543.306 Licenses; general and specific.

(a) Except as otherwise specified, the term *license* means any license or authorization contained in or issued pursuant to this part.

(b) The term *general license* means any license or authorization the terms of which are set forth in subpart E of this part.

(c) The term *specific license* means any license or authorization not set forth in subpart E of this part but issued pursuant to this part.

Note to § 543.306: See § 501.801 of this chapter on licensing procedures.

§ 543.307 Person.

The term *person* means an individual or entity.

§ 543.308 Property; property interest.

The terms *property* and *property interest* include, but are not limited to, money, checks, drafts, bullion, bank deposits, savings accounts, debts, indebtedness, obligations, notes, guarantees, debentures, stocks, bonds, coupons, any other financial instruments, bankers acceptances, mortgages, pledges, liens or other rights in the nature of security, warehouse receipts, bills of lading, trust receipts, bills of sale, any other evidences of title, ownership or indebtedness, letters of credit and any documents relating to any rights or obligations thereunder, powers of attorney, goods, wares, merchandise, chattels, stocks on hand, ships, goods on ships, real estate mortgages, deeds of trust, vendors' sales agreements, land contracts, leaseholds, ground rents, real estate and any other interest therein, options, negotiable instruments, trade acceptances, royalties, book accounts, accounts payable, judgments, patents, trademarks or copyrights, insurance policies, safe deposit boxes and their contents, annuities, pooling agreements, services of any nature whatsoever, contracts of any nature whatsoever, and any other property, real, personal, or mixed, tangible or intangible, or interest or interests therein, present, future or contingent.

§ 543.309 Transfer.

The term *transfer* means any actual or purported act or transaction, whether or not evidenced by writing, and whether or not done or performed within the United States, the purpose, intent, or effect of which is to create, surrender, release, convey, transfer, or alter, directly or indirectly, any right, remedy, power, privilege, or interest with respect to any property and, without limitation upon the foregoing, shall include the making, execution, or delivery of any assignment, power, conveyance, check, declaration, deed, deed of trust, power of attorney, power of appointment, bill of sale, mortgage, receipt, agreement, contract, certificate, gift, sale, affidavit, or statement; the making of any payment; the setting off of any obligation or credit; the appointment of any agent, trustee, or fiduciary; the creation or transfer of any lien; the issuance, docketing, filing, or levy of or under any judgment, decree, attachment, injunction, execution, or other judicial or administrative process or order, or the service of any garnishment; the acquisition of any

interest of any nature whatsoever by reason of a judgment or decree of any foreign country; the fulfillment of any condition; the exercise of any power of appointment, power of attorney, or other power; or the acquisition, disposition, transportation, importation, exportation, or withdrawal of any security.

§ 543.310 United States.

The term *United States* means the United States, its territories and possessions, and all areas under the jurisdiction or authority thereof.

§ 543.311 U.S. financial institution.

The term *U.S. financial institution* means any U.S. entity (including its foreign branches) that is engaged in the business of accepting deposits, making, granting, transferring, holding, or brokering loans or credits, or purchasing or selling foreign exchange, securities, commodity futures or options, or procuring purchasers and sellers thereof, as principal or agent; including but not limited to depository institutions, banks, savings banks, trust companies, securities brokers and dealers, commodity futures and options brokers and dealers, forward contract and foreign exchange merchants, securities and commodities exchanges, clearing corporations, investment companies, employee benefit plans, and U.S. holding companies, U.S. affiliates, or U.S. subsidiaries of any of the foregoing. This term includes those branches, offices and agencies of foreign financial institutions that are located in the United States, but not such institutions' foreign branches, offices, or agencies.

§ 543.312 United States person; U.S. person.

The term *United States person* or *U.S. person* means any United States citizen, permanent resident alien, entity organized under the laws of the United States or any jurisdiction within the United States (including foreign branches), or any person in the United States.

Subpart D—Interpretations

§ 543.401 Reference to amended sections.

Except as otherwise specified, reference to any provision in or appendix to this part or chapter or to any regulation, ruling, order, instruction, directive, or license issued pursuant to this part refers to the same as currently amended.

§ 543.402 Effect of amendment.

Unless otherwise specifically provided, any amendment, modification, or revocation of any provision in or appendix to this part or chapter or of any order, regulation, ruling, instruction, or license issued by or under the direction of the Director of the Office of Foreign Assets Control does not affect any act done or omitted, or any civil or criminal suit or proceeding commenced or pending prior to such amendment, modification, or revocation. All penalties, forfeitures, and liabilities under any such order, regulation, ruling, instruction, or license continue and may be enforced as if such amendment, modification, or revocation had not been made.

§ 543.403 Termination and acquisition of an interest in blocked property.

(a) Whenever a transaction licensed or authorized by or pursuant to this part results in the transfer of property (including any property interest) away from a person, such property shall no longer be deemed to be property blocked pursuant to § 543.201(a), unless there exists in the property another interest that is blocked pursuant to § 543.201(a) or any other part of this chapter, the transfer of which has not been effected pursuant to license or other authorization.

(b) Unless otherwise specifically provided in a license or authorization issued pursuant to this part, if property (including any property interest) is transferred or attempted to be transferred to a person whose property and interests in property are blocked pursuant to § 543.201(a), such property shall be deemed to be property in which that person has an interest and therefore blocked.

§ 543.404 Transactions ordinarily incident to a licensed transaction.

Any transaction ordinarily incident to a licensed transaction and necessary to give effect thereto is also authorized, except:

(a) An ordinarily incident transaction, not explicitly authorized within the terms of the license, by or with a person whose property and interests in property are blocked pursuant to § 543.201(a); or

(b) An ordinarily incident transaction, not explicitly authorized within the terms of the license, involving a debit to a blocked account or a transfer of blocked property.

(c) *Example.* A license authorizing Company A, whose property and interests in property are blocked pursuant to § 543.201(a), to complete a securities sale also authorizes all activities by other parties required to complete the sale, including transactions by the buyer, broker, transfer agents, banks, etc., provided that such other parties are not themselves persons whose property and interests in property are blocked pursuant to § 543.201(a).

§ 543.405 Provision of services.

(a) The prohibitions on transactions involving blocked property contained in § 543.201 apply to services performed in the United States or by U.S. persons, wherever located, including by an overseas branch of an entity located in the United States:

(1) On behalf of or for the benefit of a person whose property and interests in property are blocked pursuant to § 543.201(a); or

(2) With respect to property interests subject to § 543.201.

(b) *Example.* U.S. persons may not, except as authorized by or pursuant to this part, provide legal, accounting, financial, brokering, freight forwarding, transportation, public relations, or other services to a person whose property and interests in property are blocked pursuant to § 543.201(a).

Note to § 543.405: See §§ 543.507 and 543.508 on licensing policy with regard to the provision of certain legal and medical services.

§ 543.406 Offshore transactions.

The prohibitions in § 543.201 on transactions or dealings involving blocked property apply to transactions by any U.S. person in a location outside the United States with respect to property held in the name of a person whose property and interests in property are blocked pursuant to § 543.201(a), or property in which a person whose property and interests in property are blocked pursuant to § 543.201(a) has or has had an interest since the effective date.

§ 543.407 Payments from blocked accounts to satisfy obligations prohibited.

Pursuant to § 543.201, no debits may be made to a blocked account to pay obligations to U.S. persons or other persons, except as authorized by or pursuant to this part.

§ 543.408 Charitable contributions.

Unless specifically authorized by the Office of Foreign Assets Control pursuant to this part, no charitable contribution of funds, goods, services, or technology, including contributions to relieve human suffering, such as food, clothing or medicine, may be made by, to, or for the benefit of a person whose property and interests in property are blocked pursuant to § 543.201(a). For the purposes of this part, a contribution is made by, to, or for the benefit of a

person whose property and interests in property are blocked pursuant to § 543.201(a) if made by, to, or in the name of such a person; if made by, to, or in the name of an entity or individual acting for or on behalf of, or owned or controlled by, such a person; or if made in an attempt to violate, to evade, or to avoid the bar on the provision of contributions by, to, or for the benefit of such a person.

§ 543.409 Credit extended and cards issued by U.S. financial institutions.

The prohibition in § 543.201 on dealing in property subject to that section prohibits U.S. financial institutions from performing under any existing credit agreements, including, but not limited to, charge cards, debit cards, or other credit facilities issued by a U.S. financial institution to a person whose property and interests in property are blocked pursuant to § 543.201(a).

§ 543.410 Setoffs prohibited.

A setoff against blocked property (including a blocked account), whether by a U.S. bank or other U.S. person, is a prohibited transfer under § 543.201 if effected after the effective date.

§ 543.411 Entities owned by a person whose property and interests in property are blocked.

A person whose property and interests in property are blocked pursuant to § 543.201(a) has an interest in all property and interests in property of an entity in which it owns, directly or indirectly, a 50 percent or greater interest. The property and interests in property of such an entity, therefore, are blocked, and such an entity is a person whose property and interests in property are blocked pursuant to § 543.201(a), regardless of whether the entity itself is listed in the Annex to Executive Order 13396 or designated pursuant to § 543.201(a).

Subpart E—Licenses, Authorizations and Statements of Licensing Policy

§ 543.501 General and specific licensing procedures.

For provisions relating to licensing procedures, see part 501, subpart E of this chapter. Licensing actions taken pursuant to part 501 of this chapter with respect to the prohibitions contained in this part are considered actions taken pursuant to this part.

§ 543.502 Effect of license or authorization.

(a) No license or other authorization contained in this part, or otherwise issued by or under the direction of the Director of the Office of Foreign Assets Control, authorizes or validates any transaction effected prior to the issuance of such license or other authorization, unless specifically provided in such license or authorization.

(b) No regulation, ruling, instruction, or license authorizes any transaction prohibited under this part unless the regulation, ruling, instruction, or license is issued by the Office of Foreign Assets Control and specifically refers to this part. No regulation, ruling, instruction, or license referring to this part shall be deemed to authorize any transaction prohibited by any other provision of this chapter unless the regulation, ruling, instruction, or license specifically refers to such provision.

(c) Any regulation, ruling, instruction, or license authorizing any transaction otherwise prohibited under this part has the effect of removing a prohibition contained in this part from the transaction, but only to the extent specifically stated by its terms. Unless the regulation, ruling, instruction, or license otherwise specifies, such an authorization does not create any right, duty, obligation, claim, or interest in, or with respect to, any property that would not otherwise exist under ordinary principles of law.

§ 543.503 Exclusion from licenses.

The Director of the Office of Foreign Assets Control reserves the right to exclude any person, property, or transaction from the operation of any license or from the privileges conferred by any license. The Director of the Office of Foreign Assets Control also reserves the right to restrict the applicability of any license to particular persons, property, transactions, or classes thereof. Such actions are binding upon actual or constructive notice of the exclusions or restrictions.

§ 543.504 Payments and transfers to blocked accounts in U.S. financial institutions.

Any payment of funds or transfer of credit in which a person whose property and interests in property are blocked pursuant to § 543.201(a) has any interest that comes within the possession or control of a U.S. financial institution must be blocked in an account on the books of that financial institution. A transfer of funds or credit by a U.S. financial institution between blocked accounts in its branches or offices is authorized, provided that no transfer is made from an account within the United States to an account held outside the United States, and further provided that a transfer from a blocked account may be made only to another blocked account held in the same name.

Note to § 543.504: See § 501.603 of this chapter for mandatory reporting requirements regarding financial transfers. See also § 543.203 concerning the obligation to hold blocked funds in interest-bearing accounts.

§ 543.505 Entries in certain accounts for normal service charges authorized.

(a) A U.S. financial institution is authorized to debit any blocked account held at that financial institution in payment or reimbursement for normal service charges owed it by the owner of that blocked account.

(b) As used in this section, the term *normal service charges* shall include charges in payment or reimbursement for interest due; cable, telegraph, internet, or telephone charges; postage costs; custody fees; small adjustment charges to correct bookkeeping errors; and, but not by way of limitation, minimum balance charges, notary and protest fees, and charges for reference books, photocopies, credit reports, transcripts of statements, registered mail, insurance, stationery and supplies, and other similar items.

§ 543.506 Investment and reinvestment of certain funds.

Subject to the requirements of § 543.203, U.S. financial institutions are authorized to invest and reinvest assets blocked pursuant to § 543.201, subject to the following conditions:

(a) The assets representing such investments and reinvestments are credited to a blocked account or subaccount that is held in the same name at the same U.S. financial institution, or within the possession or control of a U.S. person, but funds shall not be transferred outside the United States for this purpose;

(b) The proceeds of such investments and reinvestments shall not be credited to a blocked account or subaccount under any name or designation that differs from the name or designation of the specific blocked account or subaccount in which such funds or securities were held; and

(c) No immediate financial or economic benefit accrues (e.g., through pledging or other use) to a person whose property and interests in property are blocked pursuant to § 543.201(a).

§ 543.507 Provision of certain legal services authorized.

(a) The provision of the following legal services to or on behalf of persons whose property and interests in property are blocked pursuant to § 543.201(a) is authorized, provided that

all receipts of payment of professional fees and reimbursement of incurred expenses must be specifically licensed:

(1) Provision of legal advice and counseling on the requirements of and compliance with the laws of the United States or any jurisdiction within the United States, provided that such advice and counseling are not provided to facilitate transactions in violation of this part;

(2) Representation of persons named as defendants in or otherwise made parties to domestic U.S. legal, arbitration, or administrative proceedings;

(3) Initiation and conduct of domestic U.S. legal, arbitration, or administrative proceedings in defense of property interests subject to U.S. jurisdiction;

(4) Representation of persons before any federal or state agency with respect to the imposition, administration, or enforcement of U.S. sanctions against such persons; and

(5) Provision of legal services in any other context in which prevailing U.S. law requires access to legal counsel at public expense.

(b) The provision of any other legal services to persons whose property and interests in property are blocked pursuant to § 543.201(a), not otherwise authorized in this part, requires the issuance of a specific license.

(c) Entry into a settlement agreement or the enforcement of any lien, judgment, arbitral award, decree, or other order through execution, garnishment, or other judicial process purporting to transfer or otherwise alter or affect property or interests in property blocked pursuant to § 543.201(a) is prohibited unless specifically licensed in accordance with § 543.202(e).

§ 543.508 Authorization of emergency medical services.

The provision of nonscheduled emergency medical services in the United States to persons whose property and interests in property are blocked pursuant to § 543.201(a) is authorized, provided that all receipt of payment for such services must be specifically licensed.

Subpart F—Reports

§ 543.601 Records and reports.

For provisions relating to required records and reports, see part 501, subpart C, of this chapter. Recordkeeping and reporting requirements imposed by part 501 of this chapter with respect to the prohibitions contained in this part are considered requirements arising pursuant to this part.

Subpart G—Penalties

§ 543.701 Penalties.

(a) Attention is directed to section 206 of the International Emergency Economic Powers Act (50 U.S.C. 1705) (''IEEPA''), which is applicable to violations of the provisions of any license, ruling, regulation, order, directive, or instruction issued by or pursuant to the direction or authorization of the Secretary of the Treasury pursuant to this part or otherwise under IEEPA.

(1) A civil penalty not to exceed the amount set forth in section 206 of IEEPA may be imposed on any person who violates, attempts to violate, conspires to violate, or causes a violation of any license, order, regulation, or prohibition issued under IEEPA.

Note to paragraph (a)(1) of § 543.701: As of the date of publication in the **Federal Register** of the final rule adding this part to 31 CFR chapter V (April 13, 2009), IEEPA provides for a maximum civil penalty not to exceed the greater of $250,000 or an amount that is twice the amount of the transaction that is the basis of the violation with respect to which the penalty is imposed.

(2) A person who willfully commits, willfully attempts to commit, or willfully conspires to commit, or aids or abets in the commission of a violation of any license, order, regulation, or prohibition may, upon conviction, be fined not more than $1,000,000, or if a natural person, be imprisoned for not more than 20 years, or both.

(b) *Adjustments to penalty amounts.* (1) The civil penalties provided in IEEPA are subject to adjustment pursuant to the Federal Civil Penalties Inflation Adjustment Act of 1990 (Pub. L. 101–410, as amended, 28 U.S.C. 2461 note).

(2) The criminal penalties provided in IEEPA are subject to adjustment pursuant to 18 U.S.C. 3571.

(c) Attention is directed to section 5 of the United Nations Participation Act, as amended (22 U.S.C. 287c(b)) (''UNPA''), which provides that any person who willfully violates or evades or attempts to violate or evade any order, rule, or regulation issued by the President pursuant to the authority granted in that section, upon conviction, shall be fined not more than $10,000 and, if a natural person, may also be imprisoned for not more than 10 years; and the officer, director, or agent of any corporation who knowingly participates in such violation or evasion shall be punished by a like fine, imprisonment, or both and any property, funds, securities, papers, or other articles or documents, or any vessel, together with her tackle, apparel, furniture, and equipment, or vehicle, or aircraft, concerned in such violation shall be forfeited to the United States.

(d) Violations involving transactions described at section 203(b)(1),(3), and (4) of IEEPA shall be subject only to the penalties set forth in paragraph (c) of this section.

(e) Attention is also directed to 18 U.S.C. 1001, which provides that whoever, in any matter within the jurisdiction of the executive, legislative, or judicial branch of the Government of the United States, knowingly and willfully falsifies, conceals, or covers up by any trick, scheme, or device a material fact; or makes any materially false, fictitious or fraudulent statement or representation; or makes or uses any false writing or document knowing the same to contain any materially false, fictitious or fraudulent statement or entry; shall be fined under title 18, United States Code, imprisoned not more than five years, or both.

(f) Violations of this part may also be subject to relevant provisions of other applicable laws.

§ 543.702 Pre-Penalty Notice; settlement.

(a) *When required.* If the Office of Foreign Assets Control has reason to believe that there has occurred a violation of any provision of this part or a violation of the provisions of any license, ruling, regulation, order, direction, or instruction issued by or pursuant to the direction or authorization of the Secretary of the Treasury pursuant to this part or otherwise under IEEPA and determines that a civil monetary penalty is warranted, the Office of Foreign Assets Control will issue a Pre-Penalty Notice informing the alleged violator of the agency's intent to impose a monetary penalty. A Pre-Penalty Notice shall be in writing. The Pre-Penalty Notice may be issued whether or not another agency has taken any action with respect to the matter. For a description of the contents of a Pre-Penalty Notice, see Appendix A to part 501 of this chapter.

(b)(1) *Right to respond.* An alleged violator has the right to respond to a Pre-Penalty Notice by making a written presentation to the Office of Foreign Assets Control. For a description of the information that should be included in such a response, see Appendix A to part 501 of this chapter.

(2) *Deadline for response.* A response to a Pre-Penalty Notice must be made within the applicable 30-day period set forth in this paragraph. The failure to submit a response within the applicable time period set forth in this paragraph shall be deemed to be a waiver of the right to respond.

(i) *Computation of time for response.* A response to a Pre-Penalty Notice must be postmarked or date-stamped by the U.S. Postal Service (or foreign postal service, if mailed abroad) or courier service provider (if transmitted to the Office of Foreign Assets Control by courier) on or before the 30th day after the postmark date on the envelope in which the Pre-Penalty Notice was mailed. If the Pre-Penalty Notice was personally delivered by a non-U.S. Postal Service agent authorized by the Office of Foreign Assets Control, a response must be postmarked or date-stamped on or before the 30th day after the date of delivery.

(ii) *Extensions of time for response.* If a due date falls on a federal holiday or weekend, that due date is extended to include the following business day. Any other extensions of time will be granted, at the discretion of the Office of Foreign Assets Control, only upon specific request to the Office of Foreign Assets Control.

(3) *Form and method of response.* A response to a Pre-Penalty Notice need not be in any particular form, but it must be typewritten and signed by the alleged violator or a representative thereof, must contain information sufficient to indicate that it is in response to the Pre-Penalty Notice, and must include the Office of Foreign Assets Control identification number listed on the Pre-Penalty Notice. A copy of the written response may be sent by facsimile, but the original also must be sent to the Office of Foreign Assets Control Civil Penalties Division by mail or courier and must be postmarked or date-stamped, in accordance with paragraph (b)(2) of this section.

(c) *Settlement.* Settlement discussion may be initiated by the Office of Foreign Assets Control, the alleged violator, or the alleged violator's authorized representative. For a description of practices with respect to settlement, see Appendix A to part 501 of this chapter.

(d) *Guidelines.* Guidelines for the imposition or settlement of civil penalties by the Office of Foreign Assets Control are contained in Appendix A to part 501 of this chapter.

(e) *Representation.* A representative of the alleged violator may act on behalf of the alleged violator, but any oral communication with the Office of Foreign Assets Control prior to a written submission regarding the specific allegations contained in the Pre-Penalty Notice must be preceded by a written letter of representation, unless the Pre-Penalty Notice was served upon the alleged violator in care of the representative.

§ 543.703 Penalty imposition.

If, after considering any written response to the Pre-Penalty Notice and any relevant facts, the Office of Foreign Assets Control determines that there was a violation by the alleged violator named in the Pre-Penalty Notice and that a civil monetary penalty is appropriate, the Office of Foreign Assets Control may issue a written Penalty Notice to the violator containing a determination of the violation and the imposition of the monetary penalty. For additional details concerning issuance of a Penalty Notice, see Appendix A to part 501 of this chapter.

The issuance of the Penalty Notice shall constitute final agency action. The violator has the right to seek judicial review of that final agency action in federal district court.

§ 543.704 Administrative collection; referral to United States Department of Justice.

In the event that the violator does not pay the penalty imposed pursuant to this part or make payment arrangements acceptable to the Director of the Office of Foreign Assets Control, the matter may be referred for administrative collection measures by the Department of the Treasury or to the United States Department of Justice for appropriate action to recover the penalty in a civil suit in a federal district court.

Subpart H—Procedures

§ 543.801 Procedures.

For license application procedures and procedures relating to amendments, modifications, or revocations of licenses; administrative decisions; rulemaking; and requests for documents pursuant to the Freedom of Information and Privacy Acts (5 U.S.C. 552 and 552a), see part 501, subpart E, of this chapter.

§ 543.802 Delegation by the Secretary of the Treasury.

Any action that the Secretary of the Treasury is authorized to take pursuant to Executive Order 13396 of February 7, 2006 (71 FR 7389, February 10, 2006), and any further Executive orders relating to the national emergency declared in Executive Order 13396, may be taken by the Director of the Office of Foreign Assets Control or by any other person to whom the Secretary of the Treasury has delegated authority so to act.

Subpart I—Paperwork Reduction Act

§ 543.901 Paperwork Reduction Act notice.

For approval by the Office of Management and Budget (''OMB'') under the Paperwork Reduction Act of 1995 (44 U.S.C. 3507) of information collections relating to recordkeeping and reporting requirements, licensing procedures (including those pursuant to statements of licensing policy), and other procedures, see § 501.901 of this chapter. An agency may not conduct or sponsor, and a person is not required to respond to, a collection of information unless it displays a valid control number assigned by OMB.

Dated: March 31, 2009.

Adam J. Szubin,

Director, Office of Foreign Assets Control.

Approved: April 3, 2009.

Stuart A. Levey

Under Secretary, Office of Terrorism and Financial Intelligence, Department of the Treasury.

[FR Doc. E9–8338 Filed 4–10–09; 8:45 am]

BILLING CODE 4811–45–P

DEPARTMENT OF THE TREASURY

Office of Foreign Assets Control

31 CFR Part 544

Weapons of Mass Destruction Proliferators Sanctions Regulations

AGENCY: Office of Foreign Assets Control, Treasury.

ACTION: Final rule.

SUMMARY: The Department of the Treasury's Office of Foreign Assets Control (''OFAC'') is adding a new part to the Code of Federal Regulations to carry out the purposes of Executive Order 13382 of June 28, 2005, ''Blocking Property of Weapons of Mass Destruction Proliferators and Their Supporters.''

DATES: *Effective Date:* April 13, 2009.

FOR FURTHER INFORMATION CONTACT: Assistant Director for Compliance, Outreach & Implementation, tel.: 202/622–2490, Assistant Director for Licensing, tel.: 202/622–2480, Assistant Director for Policy, tel.: 202/622–4855, Office of Foreign Assets Control, or Chief Counsel (Foreign Assets Control), tel.: 202/622–2410, Office of the General Counsel, Department of the Treasury (not toll free numbers).

SUPPLEMENTARY INFORMATION:

Electronic and Facsimile Availability

This document and additional information concerning OFAC are available from OFAC's Web site (*http://www.treas.gov/ofac*) or via facsimile through a 24-hour fax-on demand service, tel.: 202/622–0077.

Background

On June 28, 2005, the President, invoking the authority of, *inter alia*, the International Emergency Economic Powers Act (50 U.S.C. 1701–1706) (''IEEPA''), issued Executive Order 13382 (70 FR 38567, July 1, 2005) (''E.O. 13382''), effective at 12:01 a.m. eastern daylight time on June 29, 2005. In E.O. 13382, the President took additional steps with respect to the national emergency described and declared in Executive Order 12938 of November 14, 1994, regarding the proliferation of weapons of mass destruction and the means of delivering them.

Section 1 of E.O. 13382 blocks, with certain exceptions, all property and interests in property that are in the United States, that come within the United States, or that are or come within the possession or control of United States persons, of: (1) The persons listed in an Annex to E.O. 13382; (2) any foreign person determined by the Secretary of State, in consultation with the Secretary of the Treasury, the Attorney General, and other relevant agencies, to have engaged, or attempted to engage, in activities or transactions that have materially contributed to, or pose a risk of materially contributing to, the proliferation of weapons of mass destruction or their means of delivery (including missiles capable of delivering such weapons), including any efforts to manufacture, acquire, possess, develop, transport, transfer or use such items, by any person or foreign country of proliferation concern; (3) any person determined by the Secretary of the Treasury, in consultation with the Secretary of State, the Attorney General, and other relevant agencies, to have provided, or attempted to provide, financial, material, technological or other support for, or goods or services in support of, any activity or transaction described in clause (2) above, or any person whose property and interests in property are blocked pursuant to E.O. 13382; and (4) any person determined by the Secretary of the Treasury, in consultation with the Secretary of State, the Attorney General, and other relevant agencies, to be owned or controlled by, or acting or purporting to act for or on behalf of, directly or indirectly, any person whose property and interests in property are blocked pursuant to E.O. 13382.

Section 1 of E.O. 13382 further provides that the prohibition on any transaction or dealing by a United States person or within the United States in blocked property or interests in property includes, but is not limited to, the making of any contribution or provision of funds, goods, or services by, to, or for the benefit of, any person whose property and interests in property are blocked pursuant to E.O. 13382, and the receipt of any contribution or provision of funds, goods, or services from any such person. Section 1 of E.O. 13382 further prohibits any transaction by a United States person or within the United States that evades or avoids, or has the purpose of evading or avoiding, or attempts to violate any of the prohibitions set forth in E.O. 13382, as well as any conspiracy formed to violate such prohibitions.

In Section 3 of E.O. 13382, the President determined that the making of donations of certain articles, such as food, clothing, and medicine intended to relieve human suffering, as specified in section 203(b)(2) of IEEPA (50 U.S.C. 1702(b)(2)), by, to, or for the benefit of any person whose property and interests in property are blocked pursuant to E.O. 13382 would seriously impair his ability to deal with the national emergency declared in Executive Order 12938, and the President therefore prohibited such donations. Accordingly, the donation of such items is prohibited unless authorized by OFAC.

Section 6 of E.O. 13382 authorizes the Secretary of the Treasury, in consultation with the Secretary of State, to take such actions, including the promulgation of rules and regulations, as may be necessary to carry out the purposes of E.O. 13382. In furtherance of those purposes, OFAC is promulgating the Weapons of Mass Destruction Proliferators Sanctions Regulations, 31 CFR part 544 (the ''Regulations'').

Subpart A of the Regulations, which discusses the relation of the Regulations to other economic sanctions programs, includes a Note to § 544.101 clarifying that the sanctions implemented pursuant to the Weapons of Mass Destruction Trade Control Regulations set forth in 31 CFR part 539 are separate and distinct from the sanctions implemented pursuant to these Regulations, even though both programs are based on the same declaration of national emergency in Executive Order 12938 of November 14, 1994. Accordingly, a ''designated foreign person'' whose goods, technology, or services are prohibited from being imported into the United States under the Weapons of Mass Destruction Trade Control Regulations is not necessarily a person whose property and interests in property are blocked pursuant to these Regulations. Consequently, the property and interests in property of a ''designated foreign person'' under the Weapons of Mass Destruction Trade Control Regulations are not necessarily blocked by these Regulations, unless the ''designated foreign person'' has separately become a person whose property and interests in property are blocked pursuant to these Regulations. However, the importation into the United States of goods, technology, or services (other than information or informational materials) produced or provided by a ''designated foreign person'' under the Weapons of Mass Destruction Trade Control Regulations remains prohibited. To help the public distinguish between these two programs, persons designated by the Secretary of State under the Weapons of Mass Destruction Trade Control Regulations are listed in a separate appendix to part 539 and are not listed on OFAC's Specially Designated Nationals and Blocked Persons List (''SDN list''), which is accessible via OFAC's Web site and can be found at Appendix A to 31 CFR chapter V. Persons whose property and interests in property are blocked under these Regulations are listed on OFAC's SDN list with the identifier ''[NPWMD].''

Subpart B of the Regulations implements the prohibitions contained in Section 1 of E.O. 13382. *See, e.g.*, §§ 544.201 and 544.205. Persons identified in the Annex to E.O. 13382, designated by the Secretary of State or the Secretary of the Treasury pursuant to E.O. 13382, or otherwise subject to the blocking provisions of E.O. 13382 are referred to throughout the Regulations as ''persons whose property and interests in property are blocked pursuant to § 544.201(a).'' The names of persons listed in or designated pursuant to E.O. 13382 are or will be published on OFAC's SDN list. Those names also have been or will be published in the **Federal Register**.

Sections 544.202 and 544.203 of subpart B detail the effect of transfers of blocked property in violation of the Regulations and set forth the requirement to hold blocked funds, such as currency, bank deposits, and liquidated financial obligations, in interest-bearing blocked accounts. Section 544.204 of subpart B provides that all expenses incident to the maintenance of blocked physical property shall be the responsibility of the owners or operators of such property and that such expenses shall not be met from blocked funds, unless otherwise authorized. The section further provides that blocked property may, in OFAC's discretion, be sold or liquidated and the net proceeds placed in a blocked interest-bearing account in the name of the owner of the property.

Section 544.205 implements the prohibitions of E.O. 13382 on any transaction by a United States person or within the United States that evades or avoids, has the purpose of evading or avoiding, or attempts to violate any of the prohibitions set forth in E.O. 13382, and on any conspiracy formed to violate such prohibitions.

Section 544.206 of subpart B details transactions that are exempt from the prohibitions of part 544 pursuant to sections 203(b)(1), (3), and (4) of IEEPA (50 U.S.C. 1702(b)(1), (3), and (4)). These exemptions relate to personal communications, the importation and exportation of information or informational materials, and transactions ordinarily incident to travel. The President determined in Section 3 of E.O. 13382 that donations of the type of articles specified in Sec. 203(b)(2) of IEEPA (50 U.S.C. 1702(b)(2)), *i.e.*, articles such as food, clothing, and medicine intended to relieve human suffering, by, to, or for the benefit of any person whose property and interests in property are blocked would seriously impair the President's ability to deal with the declared national emergency. Accordingly, such donations are not exempted from these Regulations and are prohibited, unless authorized by OFAC.

Subpart C of part 544 defines key terms used throughout the Regulations, and subpart D sets forth interpretive sections regarding the general prohibitions contained in subpart B. Section 544.411 sets out the rule that the property and interests in property of an entity are blocked if the entity is 50 percent or more owned by a person whose property and interests in property are blocked, whether or not the entity itself is named in the Annex to E.O. 13382 or designated by the Secretary of State or OFAC.

Transactions otherwise prohibited under part 544 but found to be consistent with U.S. policy may be authorized by one of the general licenses contained in subpart E or by a specific license issued pursuant to the procedures described in subpart E of part 501 of 31 CFR chapter V. In addition to the general licenses, subpart E of part 544 also contains certain statements of licensing policy.

Subpart F of part 544 refers to subpart C of part 501 for applicable recordkeeping and reporting requirements. Subpart G describes the civil and criminal penalties applicable to violations of the Regulations, as well as the procedures governing the potential imposition of a civil monetary penalty. Subpart G also refers to Appendix A of part 501 for a more complete description of these procedures.

Subpart H of part 544 refers to subpart E of part 501 for applicable provisions relating to administrative procedures and memorializes a delegation of authority by the Secretary of the Treasury. Subpart I of the Regulations sets forth a Paperwork Reduction Act notice.

Public Participation

Because the Regulations involve a foreign affairs function, the provisions of Executive Order 12866 and the Administrative Procedure Act (5 U.S.C. 553) requiring notice of proposed rulemaking, opportunity for public participation, and delay in effective date are inapplicable. Because no notice of proposed rulemaking is required for this rule, the Regulatory Flexibility Act (5 U.S.C. 601–612) does not apply.

Paperwork Reduction Act

The collections of information related to the Regulations are contained in 31 CFR part 501 (the ''Reporting, Procedures and Penalties Regulations''). Pursuant to the Paperwork Reduction Act of 1995 (44 U.S.C. 3507), those collections of information have been approved by the Office of Management and Budget under control number 1505–0164. An agency may not conduct or sponsor, and a person is not required to respond to, a collection of information unless the collection of information displays a valid control number.

List of Subjects in 31 CFR Part 544

Administrative practice and procedure, Banks, Banking, Blocking of assets, Credit, Foreign trade, Penalties, Proliferation, Reporting and recordkeeping requirements, Securities, Services, Weapons of mass destruction.

■ For the reasons set forth in the preamble, the Department of the Treasury's Office of Foreign Assets Control adds part 544 to 31 CFR chapter V to read as follows:

PART 544—WEAPONS OF MASS DESTRUCTION PROLIFERATORS SANCTIONS REGULATIONS

Subpart A—Relation of This Part to Other Laws and Regulations

Sec.

544.101 Relation of this part to other laws and regulations.

Subpart B—Prohibitions

544.201 Prohibited transactions involving blocked property.
544.202 Effect of transfers violating the provisions of this part.
544.203 Holding of funds in interest-bearing accounts; investment and reinvestment.
544.204 Expenses of maintaining blocked physical property; liquidation of blocked property.
544.205 Evasions; attempts; conspiracies.
544.206 Exempt transactions.

Subpart C—General Definitions

544.301 Blocked account; blocked property.
544.302 Effective date.
544.303 Entity.
544.304 Information or informational materials.
544.305 Interest.
544.306 Licenses; general and specific.
544.307 Person.
544.308 Property; property interest.
544.309 Transfer.
544.310 United States.
544.311 U.S. financial institution.
544.312 United States person; U.S. person.

Subpart D—Interpretations

544.401 Reference to amended sections.
544.402 Effect of amendment.
544.403 Termination and acquisition of an interest in blocked property.
544.404 Transactions ordinarily incident to a licensed transaction.
544.405 Provision of services.
544.406 Offshore transactions.
544.407 Payments from blocked accounts to satisfy obligations prohibited.
544.408 Charitable contributions.
544.409 Credit extended and cards issued by U.S. financial institutions.
544.410 Setoffs prohibited.
544.411 Entities owned by a person whose property and interests in property are blocked.

Subpart E—Licenses, Authorizations and Statements of Licensing Policy

544.501 General and specific licensing procedures.
544.502 Effect of license or authorization.
544.503 Exclusion from licenses.
544.504 Payments and transfers to blocked accounts in U.S. financial institutions.
544.505 Entries in certain accounts for normal service charges authorized.
544.506 Investment and reinvestment of certain funds.
544.507 Provision of certain legal services authorized.
544.508 Authorization of emergency medical services.

Subpart F—Reports

544.601 Records and reports.

Subpart G—Penalties

544.701 Penalties.
544.702 Pre-Penalty Notice; settlement.
544.703 Penalty imposition.
544.704 Administrative collection; referral to United States Department of Justice.

Subpart H—Procedures

544.801 Procedures.
544.802 Delegation by the Secretary of the Treasury.

Subpart I—Paperwork Reduction Act

544.901 Paperwork Reduction Act notice.

Authority: 3 U.S.C. 301; 31 U.S.C. 321(b); 50 U.S.C. 1601–1651, 1701–1706; Public Law 101–410, 104 Stat. 890 (28 U.S.C. 2461 note); Public Law 110–96, 121 Stat. 1011; E.O. 12938, 59 FR 59099, 3 CFR, 1994 Comp., p. 950; E.O. 13094, 63 FR 40803, 3 CFR, 1998 Comp., p. 200; E.O. 13382, 70 FR 38567, 3 CFR, 2005 Comp., p. 170.

Subpart A—Relation of This Part to Other Laws and Regulations

§ 544.101 Relation of this part to other laws and regulations.

This part is separate from, and independent of, the other parts of this chapter, with the exception of part 501 of this chapter, the recordkeeping and reporting requirements and license application and other procedures of which apply to this part. Actions taken pursuant to part 501 of this chapter with respect to the prohibitions contained in this part are considered actions taken pursuant to this part. Differing foreign policy and national security circumstances may result in differing interpretations of similar language among the parts of this chapter. No license or authorization contained in or issued pursuant to those other parts authorizes any transaction prohibited by this part. No license or authorization contained in or issued pursuant to any other provision of law or regulation authorizes any transaction prohibited by this part. No license or authorization contained in or issued pursuant to this part relieves the involved parties from complying with any other applicable laws or regulations.

Note to § 544.101: The sanctions implemented pursuant to the Weapons of Mass Destruction Trade Control Regulations set forth in part 539 of this chapter are separate and distinct from the sanctions implemented pursuant to this part, even though both programs have been imposed pursuant to the same declaration of national emergency in Executive Order 12938 of November 14, 1994. Accordingly, a ''designated foreign person'' whose goods, technology, or services are prohibited from being imported into the United States under part 539 is not necessarily a person whose property and interests in property are blocked pursuant to § 544.201(a). Consequently, the property and interests in property of a ''designated foreign person'' under part 539 are not blocked, unless the ''designated foreign person'' has separately become a person whose property and interests in property are blocked pursuant to § 544.201(a) or any other part of 31 CFR chapter V. Note, however, that the importation into the United States of goods, technology, or services (other than information or informational materials) produced or provided by a ''designated foreign person'' under part 539 is prohibited by that part.

Subpart B—Prohibitions

§ 544.201 Prohibited transactions involving blocked property.

(a) Except as authorized by regulations, orders, directives, rulings, instructions, licenses or otherwise, and notwithstanding any contracts entered into or any license or permit granted prior to the effective date, all property and interests in property that are in the United States, that hereafter come within the United States, or that are or hereafter come within the possession or control of U.S. persons, including their overseas branches, of the following persons are blocked and may not be transferred, paid, exported, withdrawn, or otherwise dealt in:

(1) Any person listed in the Annex to Executive Order 13382 of June 28, 2005 (70 FR 38567, July 1, 2005);

(2) Any foreign person determined by the Secretary of State, in consultation with the Secretary of the Treasury, the Attorney General, and other relevant agencies, to have engaged, or attempted to engage, in activities or transactions that have materially contributed to, or pose a risk of materially contributing to, the proliferation of weapons of mass destruction or their means of delivery (including missiles capable of delivering such weapons), including any efforts to manufacture, acquire, possess, develop, transport, transfer or use such items, by any person or foreign country of proliferation concern;

(3) Any person determined by the Secretary of the Treasury, in consultation with the Secretary of State, the Attorney General, and other relevant agencies, to have provided, or attempted to provide, financial, material, technological or other support for, or goods or services in support of, any activity or transaction described in paragraph (a)(2) of this section, or any person whose property and interests in property are blocked pursuant to this section; and

(4) Any person determined by the Secretary of the Treasury, in consultation with the Secretary of State, the Attorney General, and other relevant agencies, to be owned or controlled by, or acting or purporting to act for or on behalf of, directly or indirectly, any person whose property and interests in property are blocked pursuant to this section.

Note to paragraph (a) of § 544.201: 1. The names of persons listed in or designated pursuant to Executive Order 13382, whose property and interests in property are blocked pursuant to paragraph (a) of this section, are published on the Office of Foreign Assets Control's Specially Designated Nationals and Blocked Persons List (''SDN'' list) (which is accessible via the Office of Foreign Assets Control's Web site), published in the **Federal Register**, and incorporated into Appendix A to this chapter with the identifier ''[NPWMD].'' See § 544.411 concerning entities that may not be listed on the SDN list but whose property and interests in property are nevertheless blocked pursuant to paragraph (a) of this section.

2. Section 203 of the International Emergency Economic Powers Act (50 U.S.C. 1701–1706) (''IEEPA'') explicitly authorizes the blocking of property and interests in property of a person during the pendency of an investigation. The names of persons whose property and interests in property are blocked pending investigation pursuant to this part also are published on the SDN list, published in the **Federal Register**, and incorporated into Appendix A to this chapter with the identifier ''[BPI–NPWMD].''

3. Sections 501.806 and 501.807 of this chapter describe the procedures to be followed by persons seeking, respectively, the unblocking of funds that they believe were blocked due to mistaken identity, or administrative reconsideration of their status as persons whose property and interests in Property are blocked pursuant to paragraph (a) of this section.

(b) The prohibitions in paragraph (a) of this section include, but are not limited to, prohibitions on the following transactions when engaged in by a United States person or within the United States:

(1) The making of any contribution or provision of funds, goods, or services by, to, or for the benefit of any person whose property and interests in property are blocked pursuant to paragraph (a) of this section; and

(2) The receipt of any contribution or provision of funds, goods, or services from any person whose property and interests in property are blocked pursuant to paragraph (a) of this section.

(c) Unless otherwise authorized by this part or by a specific license expressly referring to this section, any dealing in any security (or evidence thereof) held within the possession or control of a U.S. person and either registered or inscribed in the name of, or known to be held for the benefit of, or issued by, any person whose property and interests in property are blocked pursuant to paragraph (a) of this section is prohibited. This prohibition includes but is not limited to the transfer (including the transfer on the books of any issuer or agent thereof), disposition, transportation, importation, exportation, or withdrawal of, or the endorsement or guaranty of signatures on, any such security on or after the effective date. This prohibition applies irrespective of the fact that at any time (whether prior to, on, or subsequent to the effective date) the registered or inscribed owner

of any such security may have or might appear to have assigned, transferred, or otherwise disposed of the security.

§ 544.202 Effect of transfers violating the provisions of this part.

(a) Any transfer after the effective date that is in violation of any provision of this part or of any regulation, order, directive, ruling, instruction, or license issued pursuant to this part, and that involves any property or interest in property blocked pursuant to § 544.201(a), is null and void and shall not be the basis for the assertion or recognition of any interest in or right, remedy, power, or privilege with respect to such property or property interests.

(b) No transfer before the effective date shall be the basis for the assertion or recognition of any right, remedy, power, or privilege with respect to, or any interest in, any property or interest in property blocked pursuant to § 544.201(a), unless the person who holds or maintains such property, prior to that date, had written notice of the transfer or by any written evidence had recognized such transfer.

(c) Unless otherwise provided, an appropriate license or other authorization issued by or pursuant to the direction or authorization of the Director of the Office of Foreign Assets Control before, during, or after a transfer shall validate such transfer or make it enforceable to the same extent that it would be valid or enforceable but for the provisions of IEEPA, Executive Order 13382, this part, and any regulation, order, directive, ruling, instruction, or license issued pursuant to this part.

(d) Transfers of property that otherwise would be null and void or unenforceable by virtue of the provisions of this section shall not be deemed to be null and void or unenforceable as to any person with whom such property is or was held or maintained (and as to such person only) in cases in which such person is able to establish to the satisfaction of the Director of the Office of Foreign Assets Control each of the following:

(1) Such transfer did not represent a willful violation of the provisions of this part by the person with whom such property is or was held or maintained (and as to such person only);

(2) The person with whom such property is or was held or maintained did not have reasonable cause to know or suspect, in view of all the facts and circumstances known or available to such person, that such transfer required a license or authorization issued pursuant to this part and was not so licensed or authorized, or, if a license or authorization did purport to cover the transfer, that such license or authorization had been obtained by misrepresentation of a third party or withholding of material facts or was otherwise fraudulently obtained; and

(3) The person with whom such property is or was held or maintained filed with the Office of Foreign Assets Control a report setting forth in full the circumstances relating to such transfer promptly upon discovery that:

(i) Such transfer was in violation of the provisions of this part or any regulation, ruling, instruction, license, or other directive or authorization issued pursuant to this part;

(ii) Such transfer was not licensed or authorized by the Director of the Office of Foreign Assets Control; or

(iii) If a license did purport to cover the transfer, such license had been obtained by misrepresentation of a third party or withholding of material facts or was otherwise fraudulently obtained.

Note to paragraph (d) of § 544.202: The filing of a report in accordance with the provisions of paragraph (d)(3) of this section shall not be deemed evidence that the terms of paragraphs (d)(1) and (d)(2) of this section have been satisfied.

(e) Unless licensed pursuant to this part, any attachment, judgment, decree, lien, execution, garnishment, or other judicial process is null and void with respect to any property in which, on or since the effective date, there existed an interest of a person whose property and interests in property are blocked pursuant to § 544.201(a).

§ 544.203 Holding of funds in interest-bearing accounts; investment and reinvestment.

(a) Except as provided in paragraphs (c) or (d) of this section, or as otherwise directed by the Office of Foreign Assets Control, any U.S. person holding funds, such as currency, bank deposits, or liquidated financial obligations, subject to § 544.201(a) shall hold or place such funds in a blocked interest-bearing account located in the United States.

(b)(1) For purposes of this section, the term *blocked interest-bearing account* means a blocked account:

(i) In a federally-insured U.S. bank, thrift institution, or credit union, provided the funds are earning interest at rates that are commercially reasonable; or

(ii) With a broker or dealer registered with the Securities and Exchange Commission under the Securities Exchange Act of 1934 (15 U.S.C. 78a *et seq.*), provided the funds are invested in a money market fund or in U.S. Treasury bills.

(2) For purposes of this section, a rate is commercially reasonable if it is the rate currently offered to other depositors on deposits or instruments of comparable size and maturity.

(3) Funds held or placed in a blocked account pursuant to this paragraph (b) may not be invested in instruments the maturity of which exceeds 180 days. If interest is credited to a separate blocked account or subaccount, the name of the account party on each account must be the same.

(c) Blocked funds held in instruments the maturity of which exceeds 180 days at the time the funds become subject to § 544.201(a) may continue to be held until maturity in the original instrument, provided any interest, earnings, or other proceeds derived therefrom are paid into a blocked interest-bearing account in accordance with paragraphs (b) or (d) of this section.

(d) Blocked funds held in accounts or instruments outside the United States at the time the funds become subject to § 544.201(a) may continue to be held in the same type of accounts or instruments, provided the funds earn interest at rates that are commercially reasonable.

(e) This section does not create an affirmative obligation for the holder of blocked tangible property, such as chattels or real estate, or of other blocked property, such as debt or equity securities, to sell or liquidate such property. However, the Office of Foreign Assets Control may issue licenses permitting or directing such sales or liquidation in appropriate cases.

(f) Funds subject to this section may not be held, invested, or reinvested in a manner that provides immediate financial or economic benefit or access to any person whose property and interests in property are blocked pursuant to § 544.201(a), nor may their holder cooperate in or facilitate the pledging or other attempted use as collateral of blocked funds or other assets.

§ 544.204 Expenses of maintaining blocked physical property; liquidation of blocked property.

(a) Except as otherwise authorized, and notwithstanding the existence of any rights or obligations conferred or imposed by any international agreement or contract entered into or any license or permit granted prior to the effective date, all expenses incident to the maintenance of physical property blocked pursuant to § 544.201(a) shall be the responsibility of the owners or operators of such property, which

expenses shall not be met from blocked funds.

(b) Property blocked pursuant to § 544.201(a) may, in the discretion of the Office of Foreign Assets Control, be sold or liquidated and the net proceeds placed in a blocked interest-bearing account in the name of the owner of the property.

§ 544.205 Evasions; attempts; conspiracies.

(a) Except as otherwise authorized, and notwithstanding any contract entered into or any license or permit granted prior to the effective date, any transaction by a U.S. person or within the United States on or after the effective date that evades or avoids, has the purpose of evading or avoiding, or attempts to violate any of the prohibitions set forth in this part is prohibited.

(b) Except as otherwise authorized, and notwithstanding any contract entered into or any license or permit granted prior to the effective date, any conspiracy formed to violate the prohibitions set forth in this part is prohibited.

§ 544.206 Exempt transactions.

(a) *Personal communications.* The prohibitions contained in this part do not apply to any postal, telegraphic, telephonic, or other personal communication that does not involve the transfer of anything of value.

(b) *Information or informational materials.* (1) The importation from any country and the exportation to any country of any information or informational materials, as defined in § 544.304, whether commercial or otherwise, regardless of format or medium of transmission, are exempt from the prohibitions of this part.

(2) This section does not exempt from regulation or authorize transactions related to information or informational materials not fully created and in existence at the date of the transactions, or to the substantive or artistic alteration or enhancement of informational materials, or to the provision of marketing and business consulting services. Such prohibited transactions include, but are not limited to, payment of advances for information or informational materials not yet created and completed (with the exception of prepaid subscriptions for widely circulated magazines and other periodical publications); provision of services to market, produce or co-produce, create, or assist in the creation of information or informational materials; and, with respect to information or informational materials imported from persons whose property and interests in property are blocked pursuant to § 544.201(a), payment of royalties with respect to income received for enhancements or alterations made by U.S. persons to such information or informational materials.

(3) This section does not exempt or authorize transactions incident to the exportation of software subject to the Export Administration Regulations, 15 CFR parts 730–774, or to the exportation of goods, technology, or software for use in the transmission of any data, or to the provision, sale, or leasing of capacity on telecommunications transmission facilities (such as satellite or terrestrial network connectivity) for use in the transmission of any data. The exportation of such items or services and the provision, sale, or leasing of such capacity or facilities to a person whose property and interests in property are blocked pursuant to § 544.201(a) are prohibited.

(c) *Travel.* The prohibitions contained in this part do not apply to any transactions ordinarily incident to travel to or from any country, including importation of accompanied baggage for personal use, maintenance within any country including payment of living expenses and acquisition of goods or services for personal use, and arrangement or facilitation of such travel including nonscheduled air, sea, or land voyages.

Subpart C—General Definitions

§ 544.301 Blocked account; blocked property.

The terms *blocked account* and *blocked property* shall mean any account or property subject to the prohibitions in § 544.201 held in the name of a person whose property and interests in property are blocked pursuant to § 544.201(a), or in which such person has an interest, and with respect to which payments, transfers, exportations, withdrawals, or other dealings may not be made or effected except pursuant to an authorization or license from the Office of Foreign Assets Control expressly authorizing such action.

Note to § 544.301: See § 544.411 concerning the blocked status of property and interests in property of an entity that is 50 percent or more owned by a person whose property and interests in property are blocked pursuant to § 544.201(a).

§ 544.302 Effective date.

The term *effective date* refers to the effective date of the applicable prohibitions and directives contained in this part as follows:

(a) With respect to a person whose property and interests in property are blocked pursuant to § 544.201(a)(1), 12:01 a.m. eastern daylight time, June 29, 2005; and

(b) With respect to a person whose property and interests in property are blocked pursuant to § 544.201(a)(2), (a)(3), or (a)(4), the earlier of the date of actual or constructive notice of such person's designation.

§ 544.303 Entity.

The term *entity* means a partnership, association, trust, joint venture, corporation, group, subgroup, or other organization.

§ 544.304 Information or informational materials.

(a) For purposes of this part, the term *information or informational materials* includes, but is not limited to, publications, films, posters, phonograph records, photographs, microfilms, microfiche, tapes, compact disks, CD–ROMs, artworks, and news wire feeds.

Note to paragraph (a) of § 544.304: To be considered information or informational materials, artworks must be classified under chapter heading 9701, 9702, or 9703 of the Harmonized Tariff Schedule of the United States.

(b) The term *information or informational materials*, with respect to United States exports, does not include items:

(1) That were, as of April 30, 1994, or that thereafter become, controlled for export pursuant to section 5 of the Export Administration Act of 1979, 50 U.S.C. App. 2401–2420 (1979) (the ''EAA''), or section 6 of the EAA to the extent that such controls promote the nonproliferation or antiterrorism policies of the United States; or

(2) With respect to which acts are prohibited by 18 U.S.C. chapter 37.

§ 544.305 Interest.

Except as otherwise provided in this part, the term *interest*, when used with respect to property (*e.g.*, ''an interest in property''), means an interest of any nature whatsoever, direct or indirect.

§ 544.306 Licenses; general and specific.

(a) Except as otherwise specified, the term *license* means any license or authorization contained in or issued pursuant to this part.

(b) The term *general license* means any license or authorization the terms of which are set forth in subpart E of this part.

(c) The term *specific license* means any license or authorization not set forth in subpart E of this part but issued pursuant to this part.

Note to § 544.306: See § 501.801 of this chapter on licensing procedures.

§ 544.307 Person.

The term *person* means an individual or entity.

§ 544.308 Property; property interest.

The terms *property and property interest* include, but are not limited to, money, checks, drafts, bullion, bank deposits, savings accounts, debts, indebtedness, obligations, notes, guarantees, debentures, stocks, bonds, coupons, any other financial instruments, bankers acceptances, mortgages, pledges, liens or other rights in the nature of security, warehouse receipts, bills of lading, trust receipts, bills of sale, any other evidences of title, ownership or indebtedness, letters of credit and any documents relating to any rights or obligations thereunder, powers of attorney, goods, wares, merchandise, chattels, stocks on hand, ships, goods on ships, real estate mortgages, deeds of trust, vendors' sales agreements, land contracts, leaseholds, ground rents, real estate and any other interest therein, options, negotiable instruments, trade acceptances, royalties, book accounts, accounts payable, judgments, patents, trademarks or copyrights, insurance policies, safe deposit boxes and their contents, annuities, pooling agreements, services of any nature whatsoever, contracts of any nature whatsoever, and any other property, real, personal, or mixed, tangible or intangible, or interest or interests therein, present, future or contingent.

§ 544.309 Transfer.

The term *transfer* means any actual or purported act or transaction, whether or not evidenced by writing, and whether or not done or performed within the United States, the purpose, intent, or effect of which is to create, surrender, release, convey, transfer, or alter, directly or indirectly, any right, remedy, power, privilege, or interest with respect to any property and, without limitation upon the foregoing, shall include the making, execution, or delivery of any assignment, power, conveyance, check, declaration, deed, deed of trust, power of attorney, power of appointment, bill of sale, mortgage, receipt, agreement, contract, certificate, gift, sale, affidavit, or statement; the making of any payment; the setting off of any obligation or credit; the appointment of any agent, trustee, or fiduciary; the creation or transfer of any lien; the issuance, docketing, filing, or levy of or under any judgment, decree, attachment, injunction, execution, or other judicial or administrative process or order, or the service of any garnishment; the acquisition of any interest of any nature whatsoever by reason of a judgment or decree of any foreign country; the fulfillment of any condition; the exercise of any power of appointment, power of attorney, or other power; or the acquisition, disposition, transportation, importation, exportation, or withdrawal of any security.

§ 544.310 United States.

The term *United States* means the United States, its territories and possessions, and all areas under the jurisdiction or authority thereof.

§ 544.311 U.S. financial institution.

The term *U.S. financial institution* means any U.S. entity (including its foreign branches) that is engaged in the business of accepting deposits, making, granting, transferring, holding, or brokering loans or credits, or purchasing or selling foreign exchange, securities, commodity futures or options, or procuring purchasers and sellers thereof, as principal or agent; including but not limited to depository institutions, banks, savings banks, trust companies, securities brokers and dealers, commodity futures and options brokers and dealers, forward contract and foreign exchange merchants, securities and commodities exchanges, clearing corporations, investment companies, employee benefit plans, and U.S. holding companies, U.S. affiliates, or U.S. subsidiaries of any of the foregoing. This term includes those branches, offices and agencies of foreign financial institutions that are located in the United States, but not such institutions' foreign branches, offices, or agencies.

§ 544.312 United States person; U.S. person.

The term *United States person* or *U.S. person* means any United States citizen, permanent resident alien, entity organized under the laws of the United States or any jurisdiction within the United States (including foreign branches), or any person in the United States.

Subpart D—Interpretations

§ 544.401 Reference to amended sections.

Except as otherwise specified, reference to any provision in or appendix to this part or chapter or to any regulation, ruling, order, instruction, directive, or license issued pursuant to this part refers to the same as currently amended.

§ 544.402 Effect of amendment.

Unless otherwise specifically provided, any amendment, modification, or revocation of any provision in or appendix to this part or chapter or of any order, regulation, ruling, instruction, or license issued by or under the direction of the Director of the Office of Foreign Assets Control does not affect any act done or omitted, or any civil or criminal suit or proceeding commenced or pending prior to such amendment, modification, or revocation. All penalties, forfeitures, and liabilities under any such order, regulation, ruling, instruction, or license continue and may be enforced as if such amendment, modification, or revocation had not been made.

§ 544.403 Termination and acquisition of an interest in blocked property.

(a) Whenever a transaction licensed or authorized by or pursuant to this part results in the transfer of property (including any property interest) away from a person, such property shall no longer be deemed to be property blocked pursuant to § 544.201(a), unless there exists in the property another interest that is blocked pursuant to § 544.201(a) or any other part of this chapter, the transfer of which has not been effected pursuant to license or other authorization.

(b) Unless otherwise specifically provided in a license or authorization issued pursuant to this part, if property (including any property interest) is transferred or attempted to be transferred to a person whose property and interests in property are blocked pursuant to § 544.201(a), such property shall be deemed to be property in which that person has an interest and therefore blocked.

§ 544.404 Transactions ordinarily incident to a licensed transaction.

Any transaction ordinarily incident to a licensed transaction and necessary to give effect thereto is also authorized, except:

(a) An ordinarily incident transaction, not explicitly authorized within the terms of the license, by or with a person whose property and interests in property are blocked pursuant to § 544.201(a); or

(b) An ordinarily incident transaction, not explicitly authorized within the terms of the license, involving a debit to a blocked account or a transfer of blocked property.

(c) *Example.* A license authorizing Company A, whose property and interests in property are blocked pursuant to § 544.201(a), to complete a securities sale also authorizes all

activities by other parties required to complete the sale, including transactions by the buyer, broker, transfer agents, banks, etc., provided that such other parties are not themselves persons whose property and interests in property are blocked pursuant to § 544.201(a).

§ 544.405 Provision of services.

(a) Except as provided in § 544.206, the prohibitions on transactions involving blocked property contained in § 544.201 apply to services performed in the United States or by U.S. persons, wherever located, including by an overseas branch of an entity located in the United States:

(1) On behalf of or for the benefit of a person whose property and interests in property are blocked pursuant to § 544.201(a); or

(2) With respect to property interests subject to § 544.201.

(b) *Example:* U.S. persons may not, except as authorized by or pursuant to this part, provide legal, accounting, financial, brokering, freight forwarding, transportation, public relations, or other services to a person whose property and interests in property are blocked pursuant to § 544.201(a).

Note to § 544.405: See §§ 544.507 and 544.508 on licensing policy with regard to the provision of certain legal and medical services.

§ 544.406 Offshore transactions.

The prohibitions in § 544.201 on transactions or dealings involving blocked property apply to transactions by any U.S. person in a location outside the United States with respect to property held in the name of a person whose property and interests in property are blocked pursuant to § 544.201(a), or property in which a person whose property and interests in property are blocked pursuant to § 544.201(a) has or has had an interest since the effective date.

§ 544.407 Payments from blocked accounts to satisfy obligations prohibited.

Pursuant to § 544.201, no debits may be made to a blocked account to pay obligations to U.S. persons or other persons, except as authorized by or pursuant to this part.

§ 544.408 Charitable contributions.

Unless specifically authorized by the Office of Foreign Assets Control pursuant to this part, no charitable contribution of funds, goods, services, or technology, including contributions to relieve human suffering, such as food, clothing, or medicine, may be made by, to, or for the benefit of a person whose property and interests in property are blocked pursuant to § 544.201(a). For the purposes of this part, a contribution is made by, to, or for the benefit of a person whose property and interests in property are blocked pursuant to § 544.201(a) if made by, to, or in the name of such a person; if made by, to, or in the name of an entity or individual acting for or on behalf of, or owned or controlled by, such a person; or if made in an attempt to violate, to evade, or to avoid the bar on the provision of contributions by, to, or for the benefit of such a person.

§ 544.409 Credit extended and cards issued by U.S. financial institutions.

The prohibition in § 544.201 on dealing in property subject to that section prohibits U.S. financial institutions from performing under any existing credit agreements, including, but not limited to, charge cards, debit cards, or other credit facilities issued by a U.S. financial institution to a person whose property and interests in property are blocked pursuant to § 544.201(a).

§ 544.410 Setoffs prohibited.

A setoff against blocked property (including a blocked account), whether by a U.S. bank or other U.S. person, is a prohibited transfer under § 544.201 if effected after the effective date.

§ 544.411 Entities owned by a person whose property and interests in property are blocked.

A person whose property and interests in property are blocked pursuant to § 544.201(a) has an interest in all property and interests in property of an entity in which it owns, directly or indirectly, a 50 percent or greater interest. The property and interests in property of such an entity, therefore, are blocked, and such an entity is a person whose property and interests in property are blocked pursuant to § 544.201(a), regardless of whether the entity itself is listed in the Annex to Executive Order 13382 or designated pursuant to § 544.201(a).

Subpart E—Licenses, Authorizations and Statements of Licensing Policy

§ 544.501 General and specific licensing procedures.

For provisions relating to licensing procedures, see part 501, subpart E of this chapter. Licensing actions taken pursuant to part 501 of this chapter with respect to the prohibitions contained in this part are considered actions taken pursuant to this part.

§ 544.502 Effect of license or authorization.

(a) No license or other authorization contained in this part, or otherwise issued by or under the direction of the Director of the Office of Foreign Assets Control, authorizes or validates any transaction effected prior to the issuance of such license or other authorization, unless specifically provided in such license or authorization.

(b) No regulation, ruling, instruction, or license authorizes any transaction prohibited under this part unless the regulation, ruling, instruction or license is issued by the Office of Foreign Assets Control and specifically refers to this part. No regulation, ruling, instruction, or license referring to this part shall be deemed to authorize any transaction prohibited by any other provision of this chapter unless the regulation, ruling, instruction, or license specifically refers to such provision.

(c) Any regulation, ruling, instruction, or license authorizing any transaction otherwise prohibited under this part has the effect of removing a prohibition contained in this part from the transaction, but only to the extent specifically stated by its terms. Unless the regulation, ruling, instruction, or license otherwise specifies, such an authorization does not create any right, duty, obligation, claim, or interest in, or with respect to, any property that would not otherwise exist under ordinary principles of law.

§ 544.503 Exclusion from licenses.

The Director of the Office of Foreign Assets Control reserves the right to exclude any person, property, or transaction from the operation of any license or from the privileges conferred by any license. The Director of the Office of Foreign Assets Control also reserves the right to restrict the applicability of any license to particular persons, property, transactions, or classes thereof. Such actions are binding upon actual or constructive notice of the exclusions or restrictions.

§ 544.504 Payments and transfers to blocked accounts in U.S. financial institutions.

Any payment of funds or transfer of credit in which a person whose property and interests in property are blocked pursuant to § 544.201(a) has any interest that comes within the possession or control of a U.S. financial institution must be blocked in an account on the books of that financial institution. A transfer of funds or credit by a U.S. financial institution between blocked accounts in its branches or offices is authorized, provided that no transfer is

made from an account within the United States to an account held outside the United States, and further provided that a transfer from a blocked account may be made only to another blocked account held in the same name.

Note to § 544.504: See § 501.603 of this chapter for mandatory reporting requirements regarding financial transfers. See also § 544.203 concerning the obligation to hold blocked funds in interest-bearing accounts.

§ 544.505 Entries in certain accounts for normal service charges authorized.

(a) A U.S. financial institution is authorized to debit any blocked account held at that financial institution in payment or reimbursement for normal service charges owed it by the owner of that blocked account.

(b) As used in this section, the term *normal service charges* shall include charges in payment or reimbursement for interest due; cable, telegraph, internet, or telephone charges; postage costs; custody fees; small adjustment charges to correct bookkeeping errors; and, but not by way of limitation, minimum balance charges, notary and protest fees, and charges for reference books, photocopies, credit reports, transcripts of statements, registered mail, insurance, stationery and supplies, and other similar items.

§ 544.506 Investment and reinvestment of certain funds.

Subject to the requirements of § 544.203, U.S. financial institutions are authorized to invest and reinvest assets blocked pursuant to § 544.201, subject to the following conditions:

(a) The assets representing such investments and reinvestments are credited to a blocked account or subaccount that is held in the same name at the same U.S. financial institution, or within the possession or control of a U.S. person, but funds shall not be transferred outside the United States for this purpose;

(b) The proceeds of such investments and reinvestments shall not be credited to a blocked account or subaccount under any name or designation that differs from the name or designation of the specific blocked account or subaccount in which such funds or securities were held; and

(c) No immediate financial or economic benefit accrues (*e.g.*, through pledging or other use) to persons whose property and interests in property are blocked pursuant to § 544.201(a).

§ 544.507 Provision of certain legal services authorized.

(a) The provision of the following legal services to or on behalf of persons whose property and interests in property are blocked pursuant to § 544.201(a) is authorized, provided that all receipts of payment of professional fees and reimbursement of incurred expenses must be specifically licensed:

(1) Provision of legal advice and counseling on the requirements of and compliance with the laws of the United States or any jurisdiction within the United States, provided that such advice and counseling are not provided to facilitate transactions in violation of this part;

(2) Representation of persons named as defendants in or otherwise made parties to domestic U.S. legal, arbitration, or administrative proceedings;

(3) Initiation and conduct of domestic U.S. legal, arbitration, or administrative proceedings in defense of property interests subject to U.S. jurisdiction;

(4) Representation of persons before any federal or state agency with respect to the imposition, administration, or enforcement of U.S. sanctions against such persons; and

(5) Provision of legal services in any other context in which prevailing U.S. law requires access to legal counsel at public expense.

(b) The provision of any other legal services to persons whose property and interests in property are blocked pursuant to § 544.201(a), not otherwise authorized in this part, requires the issuance of a specific license.

(c) Entry into a settlement agreement or the enforcement of any lien, judgment, arbitral award, decree, or other order through execution, garnishment, or other judicial process purporting to transfer or otherwise alter or affect property or interests in property blocked pursuant to § 544.201(a) is prohibited unless specifically licensed in accordance with § 544.202(e).

§ 544.508 Authorization of emergency medical services.

The provision of nonscheduled emergency medical services in the United States to persons whose property and interests in property are blocked pursuant to § 544.201(a) is authorized, provided that all receipt of payment for such services must be specifically licensed.

Subpart F—Reports

§ 544.601 Records and reports.

For provisions relating to required records and reports, see part 501, subpart C, of this chapter. Recordkeeping and reporting requirements imposed by part 501 of this chapter with respect to the prohibitions contained in this part are considered requirements arising pursuant to this part.

Subpart G—Penalties

§ 544.701 Penalties.

(a) Attention is directed to section 206 of the International Emergency Economic Powers Act (50 U.S.C. 1705) (''IEEPA''), which is applicable to violations of the provisions of any license, ruling, regulation, order, directive, or instruction issued by or pursuant to the direction or authorization of the Secretary of the Treasury pursuant to this part or otherwise under IEEPA.

(1) A civil penalty not to exceed the amount set forth in section 206 of IEEPA may be imposed on any person who violates, attempts to violate, conspires to violate, or causes a violation of any license, order, regulation, or prohibition issued under IEEPA.

Note to paragraph (a)(1) of § 544.701: As of the date of publication in the **Federal Register** of the final rule adding this part to 31 CFR chapter V (April 13, 2009), IEEPA provides for a maximum civil penalty not to exceed the greater of $250,000 or an amount that is twice the amount of the transaction that is the basis of the violation with respect to which the penalty is imposed.

(2) A person who willfully commits, willfully attempts to commit, or willfully conspires to commit, or aids or abets in the commission of a violation of any license, order, regulation, or prohibition may, upon conviction, be fined not more than $1,000,000, or if a natural person, be imprisoned for not more than 20 years, or both.

(b) *Adjustments to penalty amounts.* (1) The civil penalties provided in IEEPA are subject to adjustment pursuant to the Federal Civil Penalties Inflation Adjustment Act of 1990 (Pub. L. 101–410, as amended, 28 U.S.C. 2461 note).

(2) The criminal penalties provided in IEEPA are subject to adjustment pursuant to 18 U.S.C. 3571.

(c) Attention is also directed to 18 U.S.C. 1001, which provides that whoever, in any matter within the jurisdiction of the executive, legislative, or judicial branch of the Government of the United States, knowingly and willfully falsifies, conceals, or covers up by any trick, scheme, or device a material fact; makes any materially false, fictitious, or fraudulent statement or representation; or makes or uses any false writing or document knowing the same to contain any materially false, fictitious, or fraudulent statement or entry; shall be fined under title 18,

United States Code, imprisoned not more than five years, or both.

(d) Violations of this part may also be subject to relevant provisions of other applicable laws.

§ 544.702 Pre-Penalty Notice; settlement.

(a) *When required.* If the Office of Foreign Assets Control has reason to believe that there has occurred a violation of any provision of this part or a violation of the provisions of any license, ruling, regulation, order, direction, or instruction issued by or pursuant to the direction or authorization of the Secretary of the Treasury pursuant to this part or otherwise under IEEPA and determines that a civil monetary penalty is warranted, the Office of Foreign Assets Control will issue a Pre-Penalty Notice informing the alleged violator of the agency's intent to impose a monetary penalty. A Pre-Penalty Notice shall be in writing. The Pre-Penalty Notice may be issued whether or not another agency has taken any action with respect to the matter. For a description of the contents of a Pre-Penalty Notice, see Appendix A to part 501 of this chapter.

(b)(1) *Right to respond.* An alleged violator has the right to respond to a Pre-Penalty Notice by making a written presentation to the Office of Foreign Assets Control. For a description of the information that should be included in such a response, see Appendix A to part 501 of this chapter.

(2) *Deadline for response.* A response to a Pre-Penalty Notice must be made within the applicable 30-day period set forth in this paragraph. The failure to submit a response within the applicable time period set forth in this paragraph shall be deemed to be a waiver of the right to respond.

(i) *Computation of time for response.* A response to a Pre-Penalty Notice must be postmarked or date-stamped by the U.S. Postal Service (or foreign postal service, if mailed abroad) or courier service provider (if transmitted to the Office of Foreign Assets Control by courier) on or before the 30th day after the postmark date on the envelope in which the Pre-Penalty Notice was mailed. If the Pre-Penalty Notice was personally delivered by a non-U.S. Postal Service agent authorized by the Office of Foreign Assets Control, a response must be postmarked or date-stamped on or before the 30th day after the date of delivery.

(ii) *Extensions of time for response.* If a due date falls on a federal holiday or weekend, that due date is extended to include the following business day. Any other extensions of time will be granted, at the discretion of the Office of Foreign Assets Control, only upon specific request to the Office of Foreign Assets Control.

(3) *Form and method of response.* A response to a Pre-Penalty Notice need not be in any particular form, but it must be typewritten and signed by the alleged violator or a representative thereof, must contain information sufficient to indicate that it is in response to the Pre-Penalty Notice, and must include the Office of Foreign Assets Control identification number listed on the Pre-Penalty Notice. A copy of the written response may be sent by facsimile, but the original also must be sent to the Office of Foreign Assets Control Civil Penalties Division by mail or courier and must be postmarked or date-stamped in accordance with paragraph (b)(2) of this section.

(c) *Settlement.* Settlement discussion may be initiated by the Office of Foreign Assets Control, the alleged violator, or the alleged violator's authorized representative. For a description of practices with respect to settlement, see Appendix A to part 501 of this chapter.

(d) *Guidelines.* Guidelines for the imposition or settlement of civil penalties by the Office of Foreign Assets Control are contained in Appendix A to part 501 of this chapter.

(e) *Representation.* A representative of the alleged violator may act on behalf of the alleged violator, but any oral communication with the Office of Foreign Assets Control prior to a written submission regarding the specific allegations contained in the Pre-Penalty Notice must be preceded by a written letter of representation, unless the Pre-Penalty Notice was served upon the alleged violator in care of the representative.

§ 544.703 Penalty imposition.

If, after considering any written response to the Pre-Penalty Notice and any relevant facts, the Office of Foreign Assets Control determines that there was a violation by the alleged violator named in the Pre-Penalty Notice and that a civil monetary penalty is appropriate, the Office of Foreign Assets Control may issue a Penalty Notice to the violator containing a determination of the violation and the imposition of the monetary penalty. For additional details concerning issuance of a Penalty Notice, see Appendix A to part 501 of this chapter. The issuance of the Penalty Notice shall constitute final agency action. The violator has the right to seek judicial review of that final agency action in federal district court.

§ 544.704 Administrative collection; referral to United States Department of Justice.

In the event that the violator does not pay the penalty imposed pursuant to this part or make payment arrangements acceptable to the Director of the Office of Foreign Assets Control, the matter may be referred for administrative collection measures by the Department of the Treasury or to the United States Department of Justice for appropriate action to recover the penalty in a civil suit in a federal district court.

Subpart H—Procedures

§ 544.801 Procedures.

For license application procedures and procedures relating to amendments, modifications, or revocations of licenses; administrative decisions; rulemaking; and requests for documents pursuant to the Freedom of Information and Privacy Acts (5 U.S.C. 552 and 552a), see part 501, subpart E, of this chapter.

§ 544.802 Delegation by the Secretary of the Treasury.

Any action that the Secretary of the Treasury is authorized to take pursuant to Executive Order 13382 of June 28, 2005 (70 FR 38567, July 1, 2005), and any further Executive Orders relating to the national emergency declared in Executive Order 12938 of November 14, 1994, as expanded by Executive Order 13094 of July 28, 1998, and with respect to which additional steps were taken in Executive Order 13382 of June 28, 2005, may be taken by the Director of the Office of Foreign Assets Control or by any other person to whom the Secretary of the Treasury has delegated authority so to act.

Subpart I—Paperwork Reduction Act

§ 544.901 Paperwork Reduction Act notice.

For approval by the Office of Management and Budget (''OMB'') under the Paperwork Reduction Act of 1995 (44 U.S.C. 3507) of information collections relating to recordkeeping and reporting requirements, licensing procedures (including those pursuant to statements of licensing policy), and other procedures, see § 501.901 of this chapter. An agency may not conduct or sponsor, and a person is not required to respond to, a collection of information unless it displays a valid control number assigned by OMB.

Dated: March 31, 2009.

Adam J. Szubin,

Director, Office of Foreign Assets Control.

Approved: April 3, 2009.

Stuart A. Levey,

Under Secretary, Office of Terrorism and Financial Intelligence, Department of the Treasury.

[FR Doc. E9–8336 Filed 4–10–09; 8:45 am]

BILLING CODE 4811–45–P

DEPARTMENT OF HOMELAND SECURITY

Coast Guard

33 CFR Part 117

[USCG–2009–0228]

Drawbridge Operating Regulations; Back Bay of Biloxi, Biloxi, MS

AGENCY: Coast Guard, DHS.

ACTION: Notice of temporary deviation from regulations.

SUMMARY: The Commander, Eighth Coast Guard District, has issued a temporary deviation from the regulation governing the operation of the I–110 bascule span bridge across the Back Bay of Biloxi, mile 3.0, in Biloxi, Harrison County, Mississippi. This deviation provides for the bridge to remain closed to navigation for two (2) two-hour periods daily to facilitate the movement of vehicular traffic.

DATES: This deviation is effective from 6:30 a.m. on Friday, March 27, 2009 until 6 p.m. on Monday, September 21, 2009.

ADDRESSES: Documents indicated in this preamble as being available in the docket are part of docket USCG–2009–0228 and are available online at *http://www.regulations.gov*. They are also available for inspection or copying at two locations: The Docket Management Facility (M–30), U.S. Department of Transportation, West Building Ground Floor, Room W12–140, 1200 New Jersey Avenue, SE., Washington, DC 20590, between 9 a.m. and 5 p.m., Monday through Friday, except Federal holidays, and the office of the Eighth Coast Guard District, Bridge Administration Branch, Hale Boggs Federal Building, Room 1313, 500 Poydras Street, New Orleans, Louisiana 70130–3310 between 7 a.m. and 3 p.m., Monday through Friday, except Federal holidays.

FOR FURTHER INFORMATION CONTACT: David Frank, Bridge Administration Branch, telephone (504) 671–2128.

SUPPLEMENTARY INFORMATION: The Mississippi Department of Transportation (MDOT) has requested a temporary deviation in order to improve the traffic flow of vehicles over the I–110 bascule bridge across the Back Bay of Biloxi, mile 3.0, in Biloxi, Harrison County, Mississippi. On Friday, March 20, 2009, the Popps Ferry Bridge across the Back Bay of Biloxi, mile 8.0 was damaged by a vessel allision, rendering the drawbridge inoperable for an estimated period of six months. Vehicular traffic that would normally transit across the Popps Ferry Bridge was required to find alternate routes to cross the Back Bay of Biloxi. A significant amount of these vehicles are now required to use the I–110 Bridge until the Popps Ferry Bridge is returned to service. MDOT, at the request of the local government, has requested that the draw of the I–110 bridge remain closed to navigation from 6:30 a.m. until 8:30 a.m. and from 4 p.m. until 6 p.m. daily for a period of 180 days or until the Popps Ferry Bridge is returned to service, whichever occurs first.

Presently, as per 33 CFR 117.675(a), the draw of the I–110 bridge, mile 3.0 at Biloxi shall open on signal if at least six hours notice is given. The vertical clearance of the drawbridge in the closed-to-navigation position is 60 feet above mean high water.

Navigation on the waterway consists of tugs with tows, commercial fishing vessels and recreational powerboats and sailboats. Due to the amount of vertical clearance of the drawbridge in the closed-to-navigation position, this deviation should have a minimal effect on vessels transiting the waterway. No alternate route is available.

In accordance with 33 CFR 117.35(e), the drawbridge must return to its regular operating schedule immediately at the end of the designated time period. This deviation from the operating regulations is authorized under 33 CFR 117.35.

Dated: March 27, 2009.

David M. Frank,

Bridge Administrator.

[FR Doc. E9–8267 Filed 4–10–09; 8:45 am]

BILLING CODE 4910–15–P

DEPARTMENT OF HOMELAND SECURITY

Coast Guard

33 CFR Part 117

[USCG–2009–0231]

Drawbridge Operating Regulations; Black Warrior River, Eutaw, AL

AGENCY: Coast Guard, DHS.

ACTION: Notice of temporary deviation from regulations.

SUMMARY: The Commander, Eighth Coast Guard District, has issued a temporary deviation from the regulation governing the operation of the Norfolk Southern Railroad vertical lift span bridge across the Black Warrior River, mile 267.8, at Eutaw, Greene County, Alabama. This deviation provides for the bridge to remain closed to navigation for twelve hours in order to perform scheduled maintenance.

DATES: This deviation is effective from 8 a.m. until 8 p.m. on Friday, May 1, 2009.

ADDRESSES: Documents indicated in this preamble as being available in the docket are part of docket USCG–2009–0231 and are available online at *www.regulations.gov*. They are also available for inspection or copying at two locations: The Docket Management Facility (M–30), U.S. Department of Transportation, West Building Ground Floor, Room W12–140, 1200 New Jersey Avenue, SE., Washington, DC 20590, between 9 a.m. and 5 p.m., Monday through Friday, except Federal holidays; and the office of the Eighth Coast Guard District, Bridge Administration Branch, Hale Boggs Federal Building, Room 1313, 500 Poydras Street, New Orleans, Louisiana 70130–3310 between 7 a.m. and 3 p.m., Monday through Friday, except Federal holidays.

FOR FURTHER INFORMATION CONTACT: David Frank, Bridge Administration Branch, telephone (504) 671–2128.

SUPPLEMENTARY INFORMATION: The Norfolk Southern Corporation has requested a temporary deviation in order to perform maintenance on the Norfolk Southern Railroad vertical lift span bridge across the Black Warrior River, mile 267.8, at Eutaw, Greene County, Alabama. This maintenance is necessary to make mechanical repairs to the lift towers of the bridge. This temporary deviation will allow the bridge to remain closed to navigation from 8 a.m. until 8 p.m. on Friday, May 1, 2009. During the closure the draw will not be able to open for emergencies. Currently, the draw opens on signal for the passage of vessels.

The Norfolk Southern Railroad vertical lift span drawbridge has a vertical clearance of 18.3 feet above BRENC, elevation 99.2 feet, in the closed-to-navigation position and 72 feet above BRENC in the open-to-navigation position. Navigation on the waterway consists primarily of tugs with tows and occasional recreational craft. The Coast Guard has coordinated this closure with the Warrior-Tombigbee Waterway Association (WTWA). The WTWA representative indicated that the vessel operators will be able to schedule

transits through the bridge such that operations will not significantly be hindered. Thus, it has been determined that this closure will not have a significant effect on these vessels. This closure is considered necessary for maintenance of the bridge.

In accordance with 33 CFR 117.35(e), the drawbridge must return to its regular operating schedule immediately at the end of the designated time period. This deviation from the operating regulations is authorized under 33 CFR 117.35.

Dated: March 30, 2009.

David M. Frank,

Bridge Administrator.

[FR Doc. E9–8285 Filed 4–10–09; 8:45 am]

BILLING CODE 4910–15–P

DEPARTMENT OF HOMELAND SECURITY

Coast Guard

33 CFR Part 117

[USCG–2009–0230]

Drawbridge Operating Regulations; Gulf Intracoastal Waterway, Belle Chasse, LA

AGENCY: Coast Guard, DHS.

ACTION: Notice of temporary deviation from regulations.

SUMMARY: The Commander, Eighth Coast Guard District, has issued a temporary deviation from the regulation governing the operation of the Louisiana State Route 23 (LA 23) vertical lift span bridge, also known as the Judge Perez Bridge, across the Gulf Intracoastal Waterway (Algiers Alternate Route), mile 3.8, at Belle Chasse, Plaquemines Parish, Louisiana. This deviation provides for the bridge to remain closed to navigation for six hours a day for 21 consecutive days in order to perform scheduled maintenance.

DATES: This deviation is effective from 9 a.m. on Monday, May 18, 2009 until 3 p.m. on Sunday, June 7, 2009.

ADDRESSES: Documents indicated in this preamble as being available in the docket are part of docket USCG–2009–0230 and are available online at *www.regulations.gov*. They are also available for inspection or copying at two locations: The Docket Management Facility (M–30), U.S. Department of Transportation, West Building Ground Floor, Room W12–140, 1200 New Jersey Avenue, SE., Washington, DC 20590, between 9 a.m. and 5 p.m., Monday through Friday, except Federal holidays; and the office of the Eighth Coast Guard District, Bridge Administration Branch, Hale Boggs Federal Building, Room 1313, 500 Poydras Street, New Orleans, Louisiana 70130–3310 between 7 a.m. and 3 p.m., Monday through Friday, except Federal holidays.

FOR FURTHER INFORMATION CONTACT: David Frank, Bridge Administration Branch, telephone (504) 671–2128.

SUPPLEMENTARY INFORMATION: The Louisiana Department of Transportation and Development (LDOTD) has requested a temporary deviation in order to perform maintenance on the State Route 23 (LA 23) vertical lift span bridge, also known as the Judge Perez Bridge, across the Gulf Intracoastal Waterway (Algiers Alternate Route), mile 3.8, at Belle Chasse, Plaquemines Parish, Louisiana. This maintenance is necessary to make mechanical repairs to the lift towers of the bridge. This temporary deviation will allow the bridge to remain closed-to-navigation position from 7 a.m. until 3 p.m. daily from Monday, May 18, 2009 until Sunday, June 7, 2009. During the closure the draw will not be able to open for emergencies. Currently, the draw opens on signal; except that, from 6 a.m. to 8:30 a.m. and from 3:30 p.m. to 5:30 p.m. Monday through Friday, except Federal holidays, the draw need not be opened for the passage of vessels.

The State Route 23 vertical lift span drawbridge across the Gulf Intracoastal Waterway (Algiers Alternate Route), mile 3.8, at Belle Chasse, Louisiana has a vertical clearance of 40 feet above mean high water in the closed-to-navigation position and 100 feet above mean high water in the open-to-navigation position. Navigation on the waterway consists primarily of tugs with tows, commercial fishing vessels, and occasional recreational craft. Mariners may use the Gulf Intracoastal Waterway (Harvey Canal) to avoid unnecessary delays. The Coast Guard has coordinated this closure with the Gulf Intracoastal Canal Association (GICA). The GICA representative indicated that the vessel operators will be able to schedule transits through the bridge such that operations will not significantly be hindered. Thus, it has been determined that this closure will not have a significant effect on these vessels. This closure is considered necessary for repair of the bridge.

In accordance with 33 CFR 117.35(e), the drawbridge must return to its regular operating schedule immediately at the end of the designated time period. This deviation from the operating regulations is authorized under 33 CFR 117.35.

Dated: March 30, 2009.

David M. Frank,

Bridge Administrator.

[FR Doc. E9–8304 Filed 4–10–09; 8:45 am]

BILLING CODE 4910–15–P

DEPARTMENT OF HOMELAND SECURITY

Coast Guard

33 CFR Part 117

[USCG–2009–0203]

Drawbridge Operation Regulations; Jamaica Bay, New York, NY, Maintenance

AGENCY: Coast Guard, DHS.

ACTION: Notice of temporary deviation from regulations.

SUMMARY: The Commander, First Coast Guard District, has issued a temporary deviation from the regulation governing the operation of the Beach Channel Railroad Bridge at mile 6.7, across Jamaica Bay, at New York City, New York. Under this temporary deviation the Beach Channel Railroad Bridge may remain in the closed position for two weekends in May. This deviation is necessary to facilitate bridge track repairs.

DATES: This deviation is effective from 6 a.m. on May 2, 2009 through 9 p.m. on May 10, 2009.

ADDRESSES: Documents indicated in this preamble as being available in the docket are part of docket USCG–2009–0203 and are available online at *http://www.regulations.gov*. They are also available for inspection or copying at two locations: The Docket Management Facility (M–30), U.S. Department of Transportation, West Building Ground Floor, Room W12–140, 1200 New Jersey Avenue, SE., Washington, DC 20590, between 9 a.m. and 5 p.m., Monday through Friday, except Federal holidays, and the First Coast Guard District, Bridge Branch Office, 408 Atlantic Avenue, Boston, Massachusetts 02110, between 7 a.m. and 3 p.m., Monday through Friday, except Federal holidays.

FOR FURTHER INFORMATION CONTACT: Judy Leung-Yee, Project Officer, First Coast Guard District, at (212) 668–7165.

SUPPLEMENTARY INFORMATION: The Beach Channel Railroad Bridge, across Jamaica Bay, mile 6.7, at New York, New York, has a vertical clearance in the closed position of 26 feet at mean high water and 31 feet at mean low water. The existing drawbridge operation regulations are listed at 33 CFR 117.5.

The owner of the bridge, New York City Transit Authority, requested a temporary deviation to facilitate maintenance repairs to the bridge rails.

Under this temporary deviation the Beach Channel Railroad Bridge need not open for the passage of vessel traffic between 6 a.m. and 9 p.m., from May 2, 2009 through May 3, 2009 and between 6 a.m. and 9 p.m., from May 9, 2009 through May 10, 2009.

In accordance with 33 CFR 117.35(e), the bridge must return to its regular operating schedule immediately at the end of the designated time period. This deviation from the operating regulations is authorized under 33 CFR 117.35.

Dated: March 30, 2009.

Gary Kassof,

Bridge Program Manager, First Coast Guard District.

[FR Doc. E9–8268 Filed 4–10–09; 8:45 am]

BILLING CODE 4910–15–P

DEPARTMENT OF HOMELAND SECURITY

Coast Guard

33 CFR Part 117

[USCG–2009–0219]

Drawbridge Operation Regulations; Chelsea River, Chelsea and East Boston, MA, Maintenance

AGENCY: Coast Guard, DHS.

ACTION: Notice of temporary deviation from regulations.

SUMMARY: The Commander, First Coast Guard District, has issued a temporary deviation from the regulation governing the operation of the Chelsea Street Bridge across the Chelsea River, mile 1.2, between Chelsea and East Boston, Massachusetts. This deviation allows the bridge to remain in the closed position for nine hours to facilitate bridge maintenance. Vessels that can pass under the draw without a bridge opening may do so at all times.

DATES: This deviation is effective from 8 p.m. on April 25, 2009, through 5 a.m. on April 26, 2009.

ADDRESSES: Documents indicated in this preamble as being available in the docket are part of docket USCG–2009–0219 and are available online at *http://www.regulations.gov*. They are also available for inspection or copying at two locations: The Docket Management Facility (M–30), U.S. Department of Transportation, West Building Ground Floor, Room W12–140, 1200 New Jersey Avenue, SE., Washington, DC 20590, between 9 a.m. and 5 p.m., Monday through Friday, except Federal holidays; and the First Coast Guard District, Bridge Branch Office, 408 Atlantic Avenue, Boston, Massachusetts 02110, between 7 a.m. and 3 p.m., Monday through Friday, except Federal holidays.

FOR FURTHER INFORMATION CONTACT: John McDonald, Project Officer, First Coast Guard District, at (617) 223–8364.

SUPPLEMENTARY INFORMATION: The Massachusetts Highway Department, requested this temporary deviation to facilitate a power supply relocation project. The Chelsea Street Bridge, across the Chelsea River at mile 1.2, between Chelsea and East Boston, Massachusetts, has a vertical clearance in the closed position of 9 feet at mean high water and 19 feet at mean low water. The bridge opens on signal as required by 33 CFR 117.593.

This deviation allows the bridge to remain closed from 8 p.m. on April 25, 2009 through 5 a.m. on April 26, 2009. Vessels able to pass under the closed draw may do so at any time.

The waterway is primarily used by deep draft tankers, tugs and barge units. Waterway users were advised of the requested bridge closure period and offered no objection.

In accordance with 33 CFR 117.35(e), the bridge must return to its regular operating schedule immediately at the end of the designated time period. This deviation from the operating regulations is authorized under 33 CFR 117.35.

Dated: March 30, 2009.

Gary Kassof,

Bridge Program Manager, First Coast Guard District.

[FR Doc. E9–8305 Filed 4–10–09; 8:45 am]

BILLING CODE 4910–15–P

DEPARTMENT OF HOMELAND SECURITY

Federal Emergency Management Agency

44 CFR Part 65

[Docket ID FEMA–2008–0020; Internal Agency Docket No. FEMA–B–1044]

Changes in Flood Elevation Determinations

AGENCY: Federal Emergency Management Agency, DHS.

ACTION: Interim rule.

SUMMARY: This interim rule lists communities where modification of the Base (1% annual-chance) Flood Elevations (BFEs) is appropriate because of new scientific or technical data. New flood insurance premium rates will be calculated from the modified BFEs for new buildings and their contents.

DATES: These modified BFEs are currently in effect on the dates listed in the table below and revise the Flood Insurance Rate Maps (FIRMs) in effect prior to this determination for the listed communities.

From the date of the second publication of these changes in a newspaper of local circulation, any person has ninety (90) days in which to request through the community that the Mitigation Assistant Administrator of FEMA reconsider the changes. The modified BFEs may be changed during the 90-day period.

ADDRESSES: The modified BFEs for each community are available for inspection at the office of the Chief Executive Officer of each community. The respective addresses are listed in the table below.

FOR FURTHER INFORMATION CONTACT: William R. Blanton Jr., Engineering Management Branch, Mitigation Directorate, Federal Emergency Management Agency, 500 C Street, SW., Washington, DC 20472, (202) 646–3151.

SUPPLEMENTARY INFORMATION: The modified BFEs are not listed for each community in this interim rule. However, the address of the Chief Executive Officer of the community where the modified BFE determinations are available for inspection is provided.

Any request for reconsideration must be based on knowledge of changed conditions or new scientific or technical data.

The modifications are made pursuant to section 201 of the Flood Disaster Protection Act of 1973, 42 U.S.C. 4105, and are in accordance with the National Flood Insurance Act of 1968, 42 U.S.C. 4001 *et seq.*, and with 44 CFR part 65.

For rating purposes, the currently effective community number is shown and must be used for all new policies and renewals.

The modified BFEs are the basis for the floodplain management measures that the community is required to either adopt or to show evidence of being already in effect in order to qualify or to remain qualified for participation in the National Flood Insurance Program (NFIP).

These modified BFEs, together with the floodplain management criteria required by 44 CFR 60.3, are the minimum that are required. They should not be construed to mean that the community must change any existing ordinances that are more stringent in their floodplain management requirements. The

community may at any time enact stricter requirements of its own, or pursuant to policies established by the other Federal, State, or regional entities. The changes in BFEs are in accordance with 44 CFR 65.4.

National Environmental Policy Act. This interim rule is categorically excluded from the requirements of 44 CFR part 10, Environmental Consideration. An environmental impact assessment has not been prepared.

Regulatory Flexibility Act. As flood elevation determinations are not within the scope of the Regulatory Flexibility Act, 5 U.S.C. 601–612, a regulatory flexibility analysis is not required.

Regulatory Classification. This interim rule is not a significant regulatory action under the criteria of section 3(f) of Executive Order 12866 of September 30, 1993, Regulatory Planning and Review, 58 FR 51735.

Executive Order 13132, Federalism. This interim rule involves no policies that have federalism implications under Executive Order 13132, Federalism.

Executive Order 12988, Civil Justice Reform. This interim rule meets the applicable standards of Executive Order 12988.

List of Subjects in 44 CFR Part 65

Flood insurance, Floodplains, Reporting and recordkeeping requirements.

■ Accordingly, 44 CFR part 65 is amended to read as follows:

PART 65—[AMENDED]

■ 1. The authority citation for part 65 continues to read as follows:

Authority: 42 U.S.C. 4001 *et seq.*; Reorganization Plan No. 3 of 1978, 3 CFR, 1978 Comp., p. 329; E.O. 12127, 44 FR 19367, 3 CFR, 1979 Comp., p. 376.

§ 65.4 [Amended]

■ 2. The tables published under the authority of § 65.4 are amended as follows:

State and county	Location and case No.	Date and name of newspaper where notice was published	Chief executive officer of community	Effective date of modification	Community No.
Arizona: Pinal	City of Casa Grande (08–09–1919P).	February 20, 2009; February 27, 2009; *Casa Grande Dispatch.*	The Honorable Robert M. Jackson, Mayor, City of Casa Grande, 510 East Florence Boulevard, Casa Grande, AZ 85222.	February 10, 2009	040080
California:					
San Bernardino	Town of Apple Valley (08–09–1552P).	February 13, 2009; February 20, 2009; *Apple Valley News.*	The Honorable Mark Shoup, Mayor, City of Apple Valley, 14955 Dale Evans Parkway, Apple Valley, CA 92307.	June 19, 2009	060752
San Bernardino	City of Hesperia (08–09–1552P).	February 12, 2009; February 19, 2009; *Hesperia Resorter.*	The Honorable Tad Honeycutt, Mayor, City of Hesperia, 9700 Seventh Avenue, Hesperia, CA 92345.	June 19, 2009	060733
San Bernardino	Unincorporated areas of San Bernardino County (08–09–1552P).	February 13, 2009; February 20, 2009; *San Bernardino Bulletin.*	The Honorable Paul Biane, Chairman, San Bernardino County Board of Supervisors, 385 North Arrowhead Avenue, Fifth Floor, San Bernardino, CA 92415–0110.	June 19, 2009	060270
Georgia: Gwinnett	Unincorporated areas of Gwinnett County (08–04–6361P).	January 2, 2009; January 9, 2009; *Gwinnett Daily Post.*	The Honorable Charles E. Bannister, Chairman, Gwinnett County Board of Commissioners, 75 Langley Drive, Lawrenceville, GA 30045.	May 11, 2009	130322
Indiana: Hamilton	City of Carmel (08–05–5476P).	February 26, 2009; March 5, 2009; *Noblesville Ledger.*	The Honorable James Brainard, Mayor, City of Carmel, One Civic Square, Carmel, IN 46032.	July 6, 2009	180081
Kentucky: Louisville-Jefferson.	Louisville-Jefferson County Metropolitan Government (08–04–3793P).	November 14, 2008; November 21, 2008; *The Courier Journal.*	The Honorable Jerry E. Abramson, Mayor, Louisville-Jefferson County Metropolitan Government, 527 West Jefferson Street, Louisville, KY 40202.	March 23, 2009	210120
Nevada: Clark	Unincorporated areas of Clark County (09–09–0318).	February 20, 2009; February 27, 2009; *Las Vegas Review Journal.*	The Honorable Rory Reid, Chair, Clark County Board of Commissioners, 500 South Grand Central Parkway, Las Vegas, NV 89106.	June 29, 2009	320003
North Carolina: Edgecombe.	Town of Tarboro (08–04–1283P).	February 3, 2009; February 10, 2009; *The Daily Southerner.*	Mr. Samuel W. Noble, Jr., Manager, Town of Tarboro, P.O. Box 220, 500 Main Street, Tarboro, North Carolina 27886–0221.	January 27, 2009	370094
Rhode Island: Newport.	Town of Portsmouth (09–01–0279P).	February 20, 2009; February 27, 2009; *Newport Daily News.*	The Honorable Dennis Canario, President, Portsmouth Town Council, 64 Birchwood Drive, Portsmouth, RI 02871.	February 9, 2009	445405
Tennessee: Nashville and Davidson.	Metropolitan Government of Nashville and Davidson County (08–04–5048P).	February 6, 2009; February 13, 2009; *The Tennessean.*	The Honorable Karl Dean, Mayor, Metropolitan Government of Nashville and Davidson County, 100 Metro Courthouse, Nashville, TN 37201.	June 16, 2009	470040
Texas:					
Webb	City of Laredo (08–06–2454P).	February 6, 2009; February 13, 2009; *Laredo Morning Times.*	The Honorable Raul G. Salinas, Mayor, City of Laredo, 1110 Houston Street, Laredo, TX 78040.	June 15, 2009	480651
Webb	Unincorporated areas of Webb County (08–06–2740P).	February 6, 2009; February 13, 2009; *Laredo Morning Times.*	The Honorable Danny Valdez, Webb County Judge, Webb County Courthouse, 1000 Houston Street, Third Floor, Laredo, TX 78040.	June 15, 2009	481059
Utah:					
Salt Lake	City of Riverton (08–08–0716P).	February 12, 2009; February 19, 2009; *Salt Lake Tribune.*	The Honorable Bill Applegarth, Mayor, City of Riverton, 12765 South 1400 West, Riverton, UT 84065.	June 19, 2009	490104

State and county	Location and case No.	Date and name of newspaper where notice was published	Chief executive officer of community	Effective date of modification	Community No.
Salt Lake	City of South Jordan (08–08–0716P).	February 12, 2009; February 19, 2009; *Salt Lake Tribune.*	The Honorable William Kent Money, Mayor, City of South Jordan, 1600 West Towne Center Drive, South Jordan, UT 84095.	June 19, 2009	490107
Washington: Spokane.	Unincorporated areas of Spokane County (08–10–0786P).	February 12, 2009; February 19, 2009; *Spokesman Review.*	The Honorable Todd Mielke, Chairman, Spokane County Board of Commissioners, Spokane County Courthouse, Room 300, 1116 West Broadway Avenue, Spokane, WA 99260.	January 30, 2009	530174
Wisconsin: Waukesha.	Unincorporated areas of Waukesha County (08–05–4338P).	February 12, 2009; February 19, 2009; *Waukesha Freeman.*	The Honorable James T. Dwyer, Chairman, Waukesha County Board of Supervisors, 515 West Moreland Boulevard, Waukesha, WI 53188.	June 19, 2009	550476

(Catalog of Federal Domestic Assistance No. 97.022, ''Flood Insurance.'')

Dated: March 25, 2009.

Michael K. Buckley,

Acting Assistant Administrator, Mitigation Directorate, Department of Homeland Security, Federal Emergency Management Agency.

[FR Doc. E9–8368 Filed 4–10–09; 8:45 am]

BILLING CODE 9110–12–P

DEPARTMENT OF HOMELAND SECURITY

Federal Emergency Management Agency

44 CFR Part 67

[Docket ID FEMA–2008–0020]

Final Flood Elevation Determinations

AGENCY: Federal Emergency Management Agency, DHS.

ACTION: Final rule.

SUMMARY: Base (1% annual chance) Flood Elevations (BFEs) and modified BFEs are made final for the communities listed below. The BFEs and modified BFEs are the basis for the floodplain management measures that each community is required either to adopt or to show evidence of being already in effect in order to qualify or remain qualified for participation in the National Flood Insurance Program (NFIP).

DATES: The date of issuance of the Flood Insurance Rate Map (FIRM) showing BFEs and modified BFEs for each community. This date may be obtained by contacting the office where the maps are available for inspection as indicated on the table below.

ADDRESSES: The final BFEs for each community are available for inspection at the office of the Chief Executive Officer of each community. The respective addresses are listed in the table below.

FOR FURTHER INFORMATION CONTACT: William R. Blanton, Jr., Engineering Management Branch, Mitigation Directorate, Federal Emergency Management Agency, 500 C Street, SW., Washington, DC 20472, (202) 646–3151.

SUPPLEMENTARY INFORMATION: The Federal Emergency Management Agency (FEMA) makes the final determinations listed below for the modified BFEs for each community listed. These modified elevations have been published in newspapers of local circulation and ninety (90) days have elapsed since that publication. The Assistant Administrator of the Mitigation Directorate has resolved any appeals resulting from this notification.

This final rule is issued in accordance with section 110 of the Flood Disaster Protection Act of 1973, 42 U.S.C. 4104, and 44 CFR part 67. FEMA has developed criteria for floodplain management in floodprone areas in accordance with 44 CFR part 60.

Interested lessees and owners of real property are encouraged to review the proof Flood Insurance Study and FIRM available at the address cited below for each community. The BFEs and modified BFEs are made final in the communities listed below. Elevations at selected locations in each community are shown.

National Environmental Policy Act. This final rule is categorically excluded from the requirements of 44 CFR part 10, Environmental Consideration. An environmental impact assessment has not been prepared.

Regulatory Flexibility Act. As flood elevation determinations are not within the scope of the Regulatory Flexibility Act, 5 U.S.C. 601–612, a regulatory flexibility analysis is not required.

Regulatory Classification. This final rule is not a significant regulatory action under the criteria of section 3(f) of Executive Order 12866 of September 30, 1993, Regulatory Planning and Review, 58 FR 51735.

Executive Order 13132, Federalism. This final rule involves no policies that have federalism implications under Executive Order 13132.

Executive Order 12988, Civil Justice Reform. This final rule meets the applicable standards of Executive Order 12988.

List of Subjects in 44 CFR Part 67

Administrative practice and procedure, Flood insurance, Reporting and recordkeeping requirements.

■ Accordingly, 44 CFR part 67 is amended as follows:

PART 67—[AMENDED]

■ 1. The authority citation for part 67 continues to read as follows:

Authority: 42 U.S.C. 4001 *et seq.*; Reorganization Plan No. 3 of 1978, 3 CFR, 1978 Comp., p. 329; E.O. 12127, 44 FR 19367, 3 CFR, 1979 Comp., p. 376.

§ 67.11 [Amended]

■ 2. The tables published under the authority of § 67.11 are amended as follows:

State	City/town/county	Source of flooding	Location	* Elevation in feet (NGVD) + Elevation in feet (NAVD) # Depth in feet above ground Modified
Unincorporated Areas of Lauderdale County, Alabama FEMA Docket No.: B–1009				
Alabama	Unincorporated Areas of Lauderdale County.	Shoal Creek	BFE 520 is at a point of 1435 feet upstream of the confluence of Shoal Creek and Indiancamp Creek.	+520
			BFE 558 is at a point of 27,805 feet upstream of the confluence of Shoal Creek and Butler Creek.	+558
Alabama	Unincorporated Areas of Lauderdale County.	Tennessee River (Navigation Channel).	BFE 432 is at a point of 5270 feet upstream of the intersection of the Tennessee River and O'Neal Bridge.	+432
			BFE 435 is at a point of 263 feet downstream of Wilson Dam.	+435

* National Geodetic Vertical Datum.
+ North American Vertical Datum.
# Depth in feet above ground.

ADDRESSES

Unincorporated Areas of Lauderdale County

Maps are available for inspection at 5100 Hwy 157 N, Florence, AL 35633.

Flooding source(s)	Location of referenced elevation	* Elevation in feet (NGVD) + Elevation in feet (NAVD) # Depth in feet above ground Modified	Communities affected
Lauderdale County, Alabama, and Incorporated Areas FEMA Docket No.: B–7786			
Tennessee River (Navigation Channel).	Approximately 981 feet upstream of the intersection of Sweetwater Creek and XS B of Tennessee River.	+432	City of Florence.
	Approximately 2238 feet upstream of the intersection of Tennessee River and XS D of Tennessee River.	+435	

* National Geodetic Vertical Datum.
+ North American Vertical Datum.
# Depth in feet above ground.

ADDRESSES

City of Florence

Maps are available for inspection at 110 West College Street, Florence, AL 35630.

Lawrence County, Alabama, and Incorporated Areas FEMA Docket No.: B–1000			
Tennessee River	At confluence of Wilson Lake (Tennessee River) and Town Creek approximately 2.6 miles downstream of Wheeler Dam.	+509	Unincorporated Areas of Lawrence County.
	Just below Wheeler Dam	+511	

* National Geodetic Vertical Datum.
+ North American Vertical Datum.
# Depth in feet above ground.

ADDRESSES

Unincorporated Areas of Lawrence County

Maps are available for inspection at 750 Main Street, Moulton, AL 35650.

Miami-Dade County, Florida and Incorporated Areas Docket No.: FEMA–B–7751			
All inland canal and shallow flooding sources.	City of Coral Gables	*7–*15	City of Coral Gables.
All inland canal and shallow flooding sources.	Town of Cutler Bay	*7–*9	Town of Cutler Bay.

Flooding source(s)	Location of referenced elevation	* Elevation in feet (NGVD) + Elevation in feet (NAVD) # Depth in feet above ground Modified	Communities affected
All inland canal and shallow flooding sources.	City of Doral	*5–*8	City of Doral.
All inland canal and shallow flooding sources.	Village of El Portal	*6	Village of El Portal.
All inland canal and shallow flooding sources.	City of Florida City	*3–*7	City of Florida City.
All inland canal and shallow flooding sources.	City of Hialeah	*5–*9	City of Hialeah.
All inland canal and shallow flooding sources.	City of Hialeah Gardens	*5–*9	City of Hialeah Gardens.
All inland canal and shallow flooding sources.	City of Homestead	*3–*10	City of Homestead.
All inland canal and shallow flooding sources.	Town of Medley	*5–*7	Town of Medley.
All inland canal and shallow flooding sources.	City of Miami	*4–*15	City of Miami.
All inland canal and shallow flooding sources.	Miami-Dade County (Unincorporated Areas)	*3–*21	Miami-Dade County (Unincorporated Areas).
All inland canal and shallow flooding sources.	Village of Miami-Shores	*11	Village of Miami-Shores.
All inland canal and shallow flooding sources.	City of Miami Springs	*6–*7	City of Miami Springs.
All inland canal and shallow flooding sources.	City of North Miami	*12	City of North Miami.
All inland canal and shallow flooding sources.	City of Opa-Locka	*5–*9	City of Opa-Locka.
All inland canal and shallow flooding sources.	Village of Palmetto Bay	*7	Village of Palmetto Bay.
All inland canal and shallow flooding sources.	Village of Pinecrest	*7–*10	Village of Pinecrest.
All inland canal and shallow flooding sources.	City of South Miami	*7–*11	City of South Miami.
All inland canal and shallow flooding sources.	City of Sweetwater	*8	City of Sweetwater.
All inland canal and shallow flooding sources.	Village of Virginia Gardens	*7	Village of Virginia Gardens.

* National Geodetic Vertical Datum.
+ North American Vertical Datum.
# Depth in feet above ground.

ADDRESSES

City of Coral Gables
Maps are available for inspection at the City of Coral Gables Department of Public Works, 2800 Southwest 72nd Avenue, Coral Gables, Florida.

Town of Cutler Bay
Maps are available for inspection at the Cutler Bay Town Hall, 10720 Caribbean Boulevard, Suite 105, Cutler Bay, Florida.

City of Doral
Maps are available for inspection at the City of Doral Building Department, 8300 Northwest 53rd Street, Suite 200, Doral, Florida.

Village of El Portal
Maps are available for inspection at the El Portal Village Hall, 500 Northeast 87th Street, El Portal, Florida.

City of Florida City
Maps are available for inspection at the Florida City Building and Zoning Department, 404 West Palm Drive, Building 3, Florida City, Florida.

City of Hialeah
Maps are available for inspection at the City of Hialeah Planning and Zoning Department, 501 Palm Avenue, 4th Floor, Hialeah, Florida.

City of Hialeah Gardens
Maps are available for inspection at the Hialeah Gardens City Hall, 10001 Northwest 87th Avenue, Hialeah Gardens, Florida.

City of Homestead
Maps are available for inspection at the Homestead City Hall, 790 North Homestead Boulevard, Homestead, Florida.

Town of Medley
Maps are available for inspection at the Medley Town Hall, 7331 Northwest 74th Street, Medley, Florida.

City of Miami
Maps are available for inspection at the City of Miami Fire/Emergency Management Department, Miami Riverside Center, 444 Southwest 2nd Avenue, 10th Floor, Miami, Florida.

Miami-Dade County Unincorporated Areas
Maps are available for inspection at the Miami-Dade County Department of Environmental Resource Management, 701 Northwest 1st Court, 4th Floor, Miami, Florida.

Village of Miami-Shores

Flooding source(s)	Location of referenced elevation	* Elevation in feet (NGVD) + Elevation in feet (NAVD) # Depth in feet above ground Modified	Communities affected
Maps are available for inspection at the Miami Shores Village Hall, 10050 Northeast 2nd Avenue, Miami Shores, Florida.			
City of Miami Springs			
Maps are available for inspection at the Miami Springs City Hall, 201 Westward Drive, Miami Springs, Florida.			
City of North Miami			
Maps are available for inspection at the North Miami City Hall, 776 Northeast 125th Street, North Miami, Florida.			
City of Opa-Locka			
Maps are available for inspection at the Opa-Locka City Hall, 780 Fisherman Street, Suite 335, Opa-Locka, Florida.			
Village of Palmetto Bay			
Maps are available for inspection at the Palmetto Bay Village Hall, 8950 Southwest 152nd Street, Palmetto Bay, Florida.			
Village of Pinecrest			
Maps are available for inspection at the Pinecrest Village Hall, 12645 Pinecrest Parkway, Pinecrest, Florida.			
City of South Miami			
Maps are available for inspection at the South Miami City Hall, 6130 Sunset Drive, South Miami, Florida.			
City of Sweetwater			
Maps are available for inspection at the Sweetwater City Hall, 500 Southwest 109th Avenue, Sweetwater, Florida.			
Village of Virginia Gardens			
Maps are available for inspection at the Virginia Gardens Village Hall, 6498 Northwest 38th Terrace, Virginia Gardens, Florida.			
Catoosa County, Georgia, and Incorporated Areas FEMA Docket No.: B–7792			
Hurricane Creek	Approximately 660 feet downstream of Cherokee Valley Road.	+824	Unincorporated Areas of Catoosa County.
	At confluence of Johnson Branch	+825	
Johnson Branch	At confluence with Hurricane Creek	+825	Unincorporated Areas of Catoosa County.
	Approximately 840 feet upstream of confluence with Hurricane Creek.	+827	
Tributary No. 1 to Black Branch	Approximately 600 feet upstream of Elaine Circle	+715	City of Fort Oglethorpe.
	Approximately 750 feet upstream of Elaine Circle	+716	

* National Geodetic Vertical Datum.
+ North American Vertical Datum.
# Depth in feet above ground.

ADDRESSES

City of Fort Oglethorpe
Maps are available for inspection at City Hall, 500 City Hall Drive, Fort Oglethorpe, GA 30747.

Unincorporated Areas of Catoosa County
Maps are available for inspection at 800 Lafayette Street, Ringgold, GA 30736.

Nassau County, New York and Incorporated Areas Docket No.: FEMA–B–1000			
Atlantic Ocean	Approximately 100 feet north of the intersection of Washington Boulevard and West Bay Drive.	+9	Town of Oyster Bay, City of Long Beach, Town of Hempstead, Village of Atlantic Beach.
	Approximately 1,500 feet south of the Jones Beach Causeway and Ocean Parkway traffic circle.	+22	
Baldwin Bay	At the intersection of Eastern Parkway and South Drive	+8	Town of Hempstead, Village of Freeport.
	Approximately 1,100 feet east of the intersection of Milburn Avenue and Mildred Drive.	+11	
Brosewere Bay	At the intersection of Seawane Place and Seawane Drive	+9	Town of Hempstead, Village of Hewlett Bay Park, Village of Hewlett Harbor, Village of Hewlett Neck, Village of Lawrence, Village of Woodsburgh.
	Approximately 600 feet south of the intersection of Bay Drive and Hickory Road.	+13	

Flooding source(s)	Location of referenced elevation	* Elevation in feet (NGVD) + Elevation in feet (NAVD) # Depth in feet above ground Modified	Communities affected
Cold Spring Harbor	At the end of Laurelton Beach Road	+9	Village of Cove Neck, Town of Oyster Bay, Village of Laurel Hollow.
	Approximately 1,200 feet east of the intersection of Ridge Road and Laurel Hollow Road.	+24	
East Bay	At the intersection of Shore Road and Horace Court	+7	Town of Hempstead.
	Approximately 200 feet south of the end of Bay Drive	+11	
Head of Bay	At the intersection of Bayswater Boulevard and Walnut Road.	+11	Town of Hempstead, Village of Cedarhurst, Village of Valley Stream.
	At the intersection of Peninsula Boulevard and Longacre Avenue.	+11	
Hempstead Harbor	Approximately 175 feet north of the intersection of Lumber Road and Old Northern Boulevard.	+11	Town of Hempstead, City of Glen Cove, Town of North Hempstead, Town of Oyster Bay, Village of Flower Hill, Village of Roslyn, Village of Roslyn Harbor, Village of Sands Point, Village of Sea Cliff.
	Approximately 500 feet east of the intersection of Forest Drive and Lillian Court.	+23	
Hewlett Bay (including Mill River, Powell Creek, Rockaway Creek).	At the intersection of Wateredge, Azure Place and Heather Lane.	+9	Town of Hempstead, Village of East Rockaway, Village of Hewlett Harbor, Village of Island Park, Village of Lyn Brook, Village of Rockville Centre.
	Approximately 500 feet east of the intersection of Harbor Road and Channel Drive.	+12	
Little Neck Bay	At the end of Pine Drive	+10	Village of Great Neck Estates, Town of North Hempstead, Village of Kings Point, Village of Saddle Rock.
	Approximately 500 feet west of the intersection of Greenleaf Hill Road and Grist Mill Lane.	+25	
Long Island Sound	At the end of Bayville Avenue	#1	Town of Oyster Bay, City of Glen Cove, Town of North Hempstead, Village of Bayville, Village of Centre Island, Village of Great Neck, Village of Great Neck Estates, Village of Kings Point, Village of Lattingtown, Village of Saddle Rock, Village of Sands Point.
	Between Valley Road and Greenwich Avenue	#2	
	At the intersection of Bayville Avenue and Adams Avenue	+9	
	At the end of Kings Point Road Extended	+27	
Manhassatt Bay	At the intersection of Mill Pond and Pleasant Avenue	+11	Town of North Hempstead, Village of Baxter Estates, Village of Great Neck, Village of Kensington, Village of Kings Point, Village of Manorhaven, Village of Plandome, Village of Plandome Heights, Village of Port Washington North, Village of Sands Point, Village of Thomaston.
	At the end of Dock Lane Extended	+23	
Middle Bay	At the intersection of Lawson Boulevard and Windsor Parkway.	+8	Town of Hempstead, Village of Freeport.
	Approximately 1,400 feet southwest of the intersection of Mildred Drive and Bertha Drive.	+13	

Flooding source(s)	Location of referenced elevation	* Elevation in feet (NGVD) + Elevation in feet (NAVD) # Depth in feet above ground Modified	Communities affected
Motts Creek	At a point approximately 1,234 feet downstream of Cochran Place.	+11	Village of Valley Stream.
	At a point approximately 40 feet downstream of Rockaway Avenue.	+11	
Oyster Bay	At the intersection of Maravilla Terrace and Miravista Road.	+9	Village of Mill Neck, Town of Oyster Bay, Village of Bayville, Village of Centre Island, Village of Cove Neck, Village of Oyster Bay Cove.
	Approximately 1,500 feet northeast of the intersection of Seawanhaka Road and Montecito Drive.	+17	
Oyster Bay Harbor	Approximately 1,000 feet south of the intersection of Centre Island Road and Suzanne Drive.	#1	Village of Centre Island.
Reynolds Channel	Approximately 200 feet east of the intersection of Fitzroy Place and Baker Court.	+8	Village of Lawrence, City of Long Beach, Town of Hempstead, Village of Atlantic Beach, Village of Island Park.
	Approximately 1,300 feet north of the intersection of Park Avenue and Ohio Avenue.	+13	
South Oyster Bay	At the intersection of Greatwater Avenue and Seagull Place.	+7	Town of Oyster Bay, Town of Hempstead, Village of Massapequa Park.
	Approximately 200 feet east of the intersection of Bayview Place and Ocean Avenue.	+11	
Valley Stream	At a point approximately 95 feet downstream of Central Avenue.	+11	Village of Valley Stream.
	At Sunrise Highway	+11	
Wreck Lead Channel	At the intersection of Lancaster Road and Radcliffe Road	+8	Town of Hempstead, City of Long Beach, Village of Island Park.
	Approximately 500 feet southwest of the intersection of Brighton Boulevard and Island Parkway.	+11	

* National Geodetic Vertical Datum.
+ North American Vertical Datum.
# Depth in feet above ground.

ADDRESSES

City of Glen Cove
Maps are available for inspection at Glen Cove City Hall, 9 Glen Street, Glen Cove, New York.

City of Long Beach
Maps are available for inspection at Long Beach City Hall, 1 West Chester Street, Long Beach, New York.

Town of Hempstead
Maps are available for inspection at Hempstead Town Hall, One Washington Street, Hempstead, New York.

Town of North Hempstead
Maps are available for inspection at Town of North Hempstead Department of Planning and Environmental Conservation, 210 Plandome Road, Manhasset, New York.

Town of Oyster Bay
Maps are available for inspection at Oyster Bay Town Hall North, 74 Audry Avenue, Oyster Bay, New York.

Village of Atlantic Beach
Maps are available for inspection at Atlantic Beach Village Hall, 65 The Plaza, Atlantic Beach, New York.

Village of Baxter Estates
Maps are available for inspection at Baxter Estates Village Hall, 2 Harbor Road, Port Washington, New York.

Village of Bayville
Maps are available for inspection at Bayville Village Hall, 34 School Street, Bayville, New York.

Village of Cedarhurst
Maps are available for inspection at Cedarhurst Village Hall, 200 Cedarhurst Avenue, Cedarhurst, New York.

Village of Centre Island
Maps are available for inspection at Centre Island Village Hall, 303 Centre Island Road, Oyster Bay, New York.

Village of Cove Neck
Maps are available for inspection at Cove Neck Village Attorney's Office, Humes & Wagner, LLP, 147 Forest Avenue, Locust Valley, New York.

Village of East Rockaway
Maps are available for inspection at East Rockaway Village Hall, 376 Atlantic Avenue, East Rockaway, New York.

Village of Flower Hill

Flooding source(s)	Location of referenced elevation	* Elevation in feet (NGVD) + Elevation in feet (NAVD) # Depth in feet above ground Modified	Communities affected

Maps are available for inspection at Flower Hill Village Hall, 1 Bonnie Heights Road, Manhasset, New York.

Village of Freeport
Maps are available for inspection at Freeport Village Hall, 46 North Ocean Avenue, Freeport, New York.

Village of Great Neck
Maps are available for inspection at Great Neck Village Hall, 61 Baker Mill Road, Great Neck, New York.

Village of Great Neck Estates
Maps are available for inspection at Great Neck Village Hall, 4 Gateway Drive, Great Neck, New York.

Village of Hewlett Bay Park
Maps are available for inspection at Hewlett Bay Park Village Hall, 30 Piermont Avenue, 11557, New York.

Village of Hewlett Harbor
Maps are available for inspection at Hewlett Harbor Village Hall, 449 Pepperidge Road, Hewlett, New York.

Village of Hewlett Neck
Maps are available for inspection at Hewlett Neck Village Hall, 30 Piermont Avenue, Hewlett, New York.

Village of Island Park
Maps are available for inspection at Island Park Village Hall, 127 Long Beach Road, Island Park, New York.

Village of Kensington
Maps are available for inspection at Kensington Village Hall, 2 Nassau Drive, Great Neck, New York.

Village of Kings Point
Maps are available for inspection at Kings Point Village Hall, 32 Steppingstone Lane, Kings Point, New York.

Village of Lattingtown
Maps are available for inspection at Lattingtown Village Hall, 299 Lattingtown Road, Lattingtown, New York.

Village of Laurel Hollow
Maps are available for inspection at Laurel Hollow Village Hall, 1492 Laurel Hollow Road, Laurel Hollow, New York.

Village of Lawrence
Maps are available for inspection at Lawrence Village Hall, 196 Central Avenue, Lawrence, New York.

Village of Lyn Brook
Maps are available for inspection at Lynbrook Village Hall, 1 Columbus Drive, Lynbrook, New York.

Village of Manorhaven
Maps are available for inspection at Manorhaven Village Hall, 33 Manorhaven Boulevard, Manorhaven, New York.

Village of Massapequa Park
Maps are available for inspection at Massapequa Park Village Hall, 151 Front Street, Massapequa, New York.

Village of Mill Neck
Maps are available for inspection at Mill Neck Village Hall, 32 Frost Mill Road, Mill Neck, New York.

Village of Oyster Bay Cove
Maps are available for inspection at Oyster Bay Cove Village Hall, #25B–Route 25A, Oyster Bay, New York.

Village of Plandome
Maps are available for inspection at Plandome Village Hall, 65 South Drive, Plandome, New York.

Village of Plandome Heights
Maps are available for inspection at Plandome Heights Village Hall, 37 Orchard Street, Plandome Heights, New York.

Village of Port Washington North
Maps are available for inspection at Port Washington North Village Hall, 71 Old Shore Road, Port Washington, New York.

Village of Rockville Centre
Maps are available for inspection at Rockville Centre Village Hall, 1 College Place, Rockville Centre, New York.

Village of Roslyn
Maps are available for inspection at Roslyn Village Hall, 1200 Old Northern Boulevard, Roslyn, New York.

Village of Roslyn Harbor
Maps are available for inspection at Roslyn Harbor Village Hall, 500 Mottscove Road, Roslyn Harbor, New York.

Village of Saddle Rock
Maps are available for inspection at Saddle Rock Village Hall, 18 Masefield Way, Saddle Rock, New York.

Village of Sands Point
Maps are available for inspection at Sands Point Village Hall, 26 Tibbits Lane, Port Washington, New York.

Village of Sea Cliff
Maps are available for inspection at Sea Cliff Village Hall, 300 Sea Cliff Avenue, Sea Cliff, New York.

Village of Thomaston
Maps are available for inspection at Thomaston Village Hall, 100 East Shore Road, Great Neck, New York.

Village of Valley Stream
Maps are available for inspection at Valley Stream Village Hall, 123 South Central Avenue, Valley Stream, New York.

Village of Woodsburgh
Maps are available for inspection at Woodsburgh Village Hall, 30 Piermont Avenue, Hewlett, New York.

Flooding source(s)	Location of referenced elevation	* Elevation in feet (NGVD) + Elevation in feet (NAVD) # Depth in feet above ground Modified	Communities affected
Oconee County, South Carolina, and Incorporated Areas FEMA Docket No.: B–7792			
Barton Creek	At the confluence with Tugaloo River	+670	Unincorporated Areas of Oconee County.
	Approximately 1,540 feet upstream of Barton Creek Road	+708	
Beaverdam Creek	At Oconee/Pickens county boundary	+672	Unincorporated Areas of Oconee County.
	Approximately 5,500 feet upstream of State Highway 59	+808	
Beaverdam Creek Tributary 3	At the confluence with Beaverdam Creek	+677	Unincorporated Areas of Oconee County.
	Approximately 5,500 feet upstream of the confluence with Beaverdam Creek.	+700	
Cane Creek	Approximately 1,100 feet upstream of the confluence with Little Cane Creek.	+804	Unincorporated Areas of Oconee County, Town of Walhalla, Town of West Union.
	Approximately 2,460 feet upstream of Rocky Knoll Road	+966	
Choestoea Creek	At the confluence with Tugaloo River	+666	Unincorporated Areas of Oconee County.
	Approximately 4,370 feet upstream of the confluence with Choestoea Creek Tributary 9.	+744	
Cleveland Creek	At the confluence with Beaverdam Creek	+676	Unincorporated Areas of Oconee County.
	Approximately 1.5 miles upstream of Feltman Road	+740	
Colonels Fork Creek	At the confluence with Conecross Creek	+772	Unincorporated Areas of Oconee County.
	Approximately 1,670 feet upstream of Bennett Road	+813	
Conecross Creek	Approximately 2.2 miles downstream of Tokeena Road	+678	Unincorporated Areas of Oconee County, City of Seneca.
	Approximately 2,630 feet upstream of Conecross Farm Road.	+708	
Conecross Tributary 1	Approximately 2.7 miles upstream of the Oconee/Anderson county boundary.	+665	Unincorporated Areas of Oconee County.
	Approximately 3.4 miles upstream of the Oconee/Anderson county boundary.	+708	
Conecross Tributary 2	At the confluence with Conecross Creek	+784	Unincorporated Areas of Oconee County, Town of Walhalla.
	Approximately 2,420 feet upstream of Bear Swamp Road	+833	
Conecross Tributary 3	At the confluence with Conecross Creek	+756	Unincorporated Areas of Oconee County.
	Approximately 850 feet upstream of State Highway 11	+780	
Cornhouse Creek	Approximately 1,610 feet downstream of Stamp Creek Road.	+813	Unincorporated Areas of Oconee County.
	Approximately 2,195 feet upstream of Stamp Creek Road	+819	
Fair Play Creek	At the confluence with Tugaloo River	+665	Unincorporated Areas of Oconee County.
	Approximately 3,200 feet downstream of Rock Creek Road.	+665	
Fall Creek	Approximately 1,830 feet downstream of Cliffs South Parkway.	+795	Unincorporated Areas of Oconee County.
	Approximately 935 feet downstream of Cliffs Cart Path Drive.	+858	
Hartwell Lake Tributary 1	Approximately 360 feet downstream of Martin Creek Road	+665	Unincorporated Areas of Oconee County.
	Approximately 1,850 feet upstream of Martin Creek Road	+672	
Hartwell Lake Tributary 2	At the confluence with Hartwell Lake	+665	Unincorporated Areas of Oconee County.
	Approximately 140 feet downstream of Sunshine Road	+827	
Hartwell Lake Tributary 3	At the confluence with Hartwell Lake	+665	Unincorporated Areas of Oconee County.
	Approximately 185 feet upstream of Rays Road	+859	
Keowee River 2 Tributary 7	Approximately 1,295 feet downstream of Maple Avenue	+810	City of Seneca.
	Approximately 2,090 feet upstream of Maple Avenue	+877	
Keowee River 2	At the confluence with Lake Keowee	+800	City of Seneca.
Tributary 7	Approximately 2,310 feet upstream of Seneca Drive	+827	
Tributary 1			

Flooding source(s)	Location of referenced elevation	* Elevation in feet (NGVD) + Elevation in feet (NAVD) # Depth in feet above ground Modified	Communities affected
Keowee River 2	At the confluence with Lake Keowee	+800	City of Seneca.
Tributary 7	Approximately 65 feet upstream of North Pine Square	+870	
Tributary 1			
Keowee River 2	At the confluence with Lake Keowee	+800	Unincorporated Areas of Oconee County.
Tributary 7	Approximately 1.5 mile upstream of the confluence with Lake Keowee.	+824	
Tributary 1			
Tributary 2			
Little Beaverdam Creek	At the Oconee/Pickens county boundary	+692	Unincorporated Areas of Oconee County.
	Approximately 260 feet upstream of Donald Road	+771	
Little Beaverdam Creek Tributary 1.	At the Oconee/Pickens county boundary	+695	Unincorporated Areas of Oconee County.
	Approximately 3,550 feet upstream of the Oconee/Pickens county boundary.	+708	
Little Cane Creek	Approximately 5,000 feet downstream of Pickens Highway	+805	Unincorporated Areas of Oconee County.
	Approximately 1,240 feet upstream of Pickens Highway	+902	
Little Choestoea Creek	Approximately 1 mile dowstream of Little Choestoea Road	+670	Unincorporated Areas of Oconee County.
	Approximately 1,570 feet downstream of Mount Pleasant Road.	+706	
Martin Creek	Approximately 4,920 feet downstream of the confluence with Martin Creek Tributary 3.	+666	City of Seneca, Unincorporated Areas of Oconee County.
	Approximately 2,560 feet upstream of South 6th Square	+891	
Martin Creek Tributary 1	At the confluence with Martin Creek	+822	City of Seneca, Unincorporated Areas of Oconee County.
	Approximately 140 feet upstream of South 6th Square	+906	
Martin Creek Tributary 2	At the confluence with Martin Creek	+717	Unincorporated Areas of Oconee County.
	Approximately 1,125 feet upstream of Owens Road	+875	
Martin Creek Tributary 3	At the confluence with Martin Creek	+715	Unincorporated Areas of Oconee County.
	Approximately 2,690 feet upstream of Martin Creek Tributary 6.	+832	
Martin Creek Tributary 6	At the confluence with Martin Creek Tributary 3	+740	Unincorporated Areas of Oconee County.
	Approximately 2,320 feet upstream of Blue Sky Boulevard	+864	
McKinneys Creek	At the confluence with Keowee River	+800	Unincorporated Areas of Oconee County.
	Approximately 1.9 mile upstream from the confluence of Keowee River.	+809	
Mud Creek	At the confluence with Beaverdam Creek	+695	Unincorporated Areas of Oconee County.
	Approximately 1.2 miles upstream of Cedar Lane Road	+846	
Mud Creek Tributary 1	At the confluence of Mud Creek	+695	Unincorporated Areas of Oconee County.
	Approximately 630 feet upstream of Cody Road	+728	
Perkins Creek Tributary 1	At the confluence of Perkins Creek Tributary	+833	City of Seneca, Unincorporated Areas of Oconee County.
Tributary 1	Approximately 1,715 feet upstream of Rolling Hills rive	+889	
Perkins Creek Tributary 1	At the confluence of Perkins Creek Tributary 1	+786	Unincorporated Areas of Oconee County, City of Seneca.
Tributary 2	Approximately 2,130 feet upstream of Dalton Road	+847	
Perkins Creek Tributary 1, Tributary 2.	At the confluence with Perkins Creek Tributary 1 Tributary 2.	+812	City of Seneca.
Tributary 1	Just downstream of W. South 6th Square	+897	
Perkins Creek Tributary 1	At the confluence of Perkins Creek Tributary 1	+801	City of Seneca, Unincorporated Areas of Oconee County.
Tributary 3	Approximately 450 feet upstream of Emaerald Road	+878	
Richland Creek	At the confluence of Conecross Creek	+758	Unincorporated Areas of Oconee County.
	Approximately 3,400 feet upstream of Bountyland Road	+824	

Flooding source(s)	Location of referenced elevation	* Elevation in feet (NGVD) + Elevation in feet (NAVD) # Depth in feet above ground Modified	Communities affected
Seneca Creek	Just upstream of Davis Creek Road	+665	Unincorporated Areas of Oconee County, City of Seneca.
	Approximately 3,100 feet upstream of Meadowbrook Drive	+878	
Seneca Creek Tributary 1	At the confluence of Seneca Creek	+667	Unincorporated Areas of Oconee County.
	Approximately 1.1 miles upstream of the confluence of Seneca Creek.	+745	
Shiloh Branch	Approximately 980 feet upstream of Seneca Creek Road	+665	Unincorporated Areas of Oconee County.
	Approximately 1.5 miles upstream of Seneca Creek Road	+687	
Snow Creek	Approximately 690 feet downstream of Sitton Shoals Road.	+665	Unincorporated Areas of Oconee County.
	Approximately 290 feet upstream of Snow Creek Road	+789	
Speeds Creek	At the confluence of Lake Hartwell	+665	Unincorporated Areas of Oconee County.
	Approximately 3,630 feet upstream of Wells Highway	+831	
Tugaloo River	Approximately 2.4 miles downstream of Interstate 85	+665	Unincorporated Areas of Oconee County.
	Approximately 3,550 feet upstream of the confluence of Battle Creek.	+896	

* National Geodetic Vertical Datum.
+ North American Vertical Datum.
# Depth in feet above ground.

ADDRESSES

City of Seneca
Maps are available for inspection at Seneca City Administrator, 221 East North First Street, Seneca, SC 29679.

Town of Walhalla
Maps are available for inspection at City of Walhalla City Administrator, 206 North Church Street, Walhalla, SC 29679.

Town of West Union
Maps are available for inspection at 1442 West Main Street, West Union, SC 29696.

Unincorporated Areas of Oconee County
Maps are available for inspection at Oconee County County Administrator, 415 South Pine Street, Walhalla, SC 29691.

(Catalog of Federal Domestic Assistance No. 97.022, ''Flood Insurance.'')

Dated: March 27, 2009.

Michael K. Buckley,

Acting Assistant Administrator, Mitigation Directorate, Department of Homeland Security, Federal Emergency Management Agency.

[FR Doc. E9–8366 Filed 4–10–09; 8:45 am]

BILLING CODE 9110–12–P

FEDERAL COMMUNICATIONS COMMISSION

47 CFR Part 1

[DA 09–682]

FCC Announces Revised Application Fee Schedule

AGENCY: Federal Communications Commission.

ACTION: Final rule; announcement of revised application fee schedule.

SUMMARY: In this document that was released on March 26, 2009, the Commission announces that effective April 28, 2009, the application fees charged to licensees and permittees will increase to reflect the change in the Consumer Price Index (CPI–U).

DATES: Effective April 28, 2009.

FOR FURTHER INFORMATION CONTACT: CORES Helpdesk at 1–877–480–3201 (Option 4).

SUPPLEMENTARY INFORMATION: According to an Order published in the **Federal Register** at 74 FR 5107, January 29, 2009, the application fees charged to licensees and permittees by the Federal Communications Commission (FCC) will increase effective April 28, 2009 to reflect the change in the Consumer Price Index-Urban (CPI–U). Section 8(b) of the Communications Act of 1934, as amended in the Omnibus Budget Reconciliation Act of 1989, requires cost-of-living adjustments to the application fee schedule every two years after October 1, 1991. Increases in the dollar amount of all section 8 application fees are based on the percentage change in the CPI–U from the date of enactment of the legislation. The new Schedule of Application Fees reflects the net change in the CPI–U of 4.9 percent, calculated from October 2005 through October 2007 in accordance with previously § 1.1115 (currently § 1.1117) of part 1 of the Commission's rules.

Wireless Telecommunications Services application fees that have an associated regulatory fee that must be paid at the time of application filing are noted by an asterisk in the Schedule. Please refer to the most recent Wireless Telecommunications Bureau Fee Filing Guide for the total fee that is due for these specific services.

Copies of all fee filing guides for each of the Bureaus/Offices that have feeable services may be obtained on the Internet at *http://www.fcc.gov/fees/appfees.html*. Copies may also be obtained by calling Forms Distribution at (202) 418–3676 or toll free by calling 1–800–418–3676.

You may also pick up the filing guides in the Commission Room TW–B200.

All revenues generated by section 8 Application Fees are deposited in the General Fund of the United States Treasury.

For additional information concerning the new Schedule of Section 8 Application Fees, please contact the CORES Helpdesk at 1–877–480–3201 (Option 4).

Federal Communications Commission.

Marlene H. Dortch,

Secretary.

[FR Doc. E9–8369 Filed 4–10–09; 8:45 am]

BILLING CODE 6712–01–P

DEPARTMENT OF COMMERCE

National Telecommunications and Information Administration

47 CFR Part 300

Docket Number: 090225246–9247–01

RIN 0660–AA20

Corrections to Part 300, Manual of Regulations and Procedures for Federal Radio Frequency Management

AGENCY: National Telecommunications and Information Administration, U.S. Department of Commerce.

ACTION: Final rule.

SUMMARY: The National Telecommunications and Information Administration (NTIA) hereby makes certain changes regarding the revisions to and the public availability of the Manual of Regulations and Procedures for Federal Radio Frequency Management (NTIA Manual). Specifically, NTIA adopts certain changes to update the version of the Manual of Regulations and Procedures for Federal Radio Frequency Management with which Federal agencies must comply when requesting use of the radio frequency spectrum. In addition, NTIA updates the address where members of the public may obtain the manual.

EFFECTIVE DATE: This regulation is effective on April 13, 2009. The incorporation by reference of certain publications listed in the rule is approved by the Director of the Federal Register as of April 13, 2009.

ADDRESSES: A reference copy of the NTIA Manual, including all revisions in effect, is available in the Office of Spectrum Management, 1401 Constitution Avenue, NW., Room 1087, Washington, DC 20230.

FOR FURTHER INFORMATION CONTACT: William Mitchell, Office of Spectrum Management at (202) 482–8124 or *wmitchell@ntia.doc.gov*.

SUPPLEMENTARY INFORMATION:

Background

NTIA authorizes the U.S. Government's use of the radio frequency spectrum. 47 U.S.C. § 902(b)(2)(A). The NTIA Manual is the compilation of policies and procedures that govern the use of the radio frequency spectrum by the U.S. Government. Federal government agencies are required to follow these policies and procedures in their use of the spectrum.

Part 300 of title 47 of the Code of Federal Regulations provides information about the way in which NTIA regularly revises the NTIA Manual and public availability of this document and all revisions. The NTIA Manual is scheduled for revision in January, May, and September of each year. Federal agencies are required to comply with the specification in the NTIA Manual according to 47 U.S.C. 901 *et seq.*, Executive Order 12046 (March 27, 1978), 43 FR 13349, 3 CFR 1978 Comp., p. 158, when requesting frequency assignments for use of the radio frequency spectrum. This rule hereby incorporates by reference the Manual of Regulations and Procedures for Federal Radio Frequency Management, January 2008 Edition, September 2008 Revision, National Telecommunications and Information Administration, United States Department of Commerce. The Director of the Federal Register approves this incorporation by reference in accordance with 5 U.S.C. 552(a) and 1 CFR part 51. You may obtain a copy from the Superintendent of Documents, U.S. Government Printing Office, Washington, DC 20402, by referring to Catalog Number 903–008–00000–8. You may inspect a copy at the Office of Spectrum Management, 1401 Constitution Avenue, NW., Room 1087, Washington, DC 20230, or call (202) 482–8124, or at the National Archives and Records Administration (NARA). For information on the availability of this material at NARA, call (202) 741–6030, or go to: *http://www.archives.gov/federal_register/code_of_federal_regulations/ibr_locations.html*.

This rule updates section 300.1(b) to specify the version of the NTIA Manual with which Federal agencies must comply when requesting frequency assignments for use of the radio frequency spectrum. Section 300.1(b) also amends the regulations by replacing ''May 1992'' with ''January 2008'' and ''June 1993'' with ''September 2008.'' Upon the effective date of this rule, Federal agencies must comply with the requirements set forth in the January 2008 edition of the NTIA Manual, as revised through September 2008.

NTIA also amends its regulations at section 300.1(c) to update the address where Federal agencies may request a copy of the NTIA Manual. The complete NTIA Manual is available from the Superintendent of Documents, U.S. Government Printing Office, Washington, DC 20402, by referring to Catalog Number 903–008–00000–8. A reference copy of the NTIA Manual, including all revisions in effect, is available online at *http://www.ntia.doc.gov/osmhome/redbook/redbook.html*. The NTIA Manual is on file at the NARA. For information on the availability of this material at NARA, call (202) 741 6030, or go to: *http://www.archives.gov/federal_register/code_of_federal_regulations/ibr_locations.html*.

Paperwork Reduction Act

This action does not contain collection of information requirements subject to the Paperwork Reduction Act (PRA). Notwithstanding any other provision of law, no person is required to respond to, nor shall any person be subject to a penalty for failure to comply with a collection of information subject to the PRA, unless that collection displays a currently valid OMB Control Number.

Executive Order 12866

This rule has been determined to be not significant for purposes of Executive Order 12866.

Administrative Procedure Act/ Regulatory Flexibility Act

NTIA finds good cause under 5 U.S.C. 553(b)(3)(B) to waive prior notice and opportunity for public comment as it is unnecessary. This action amends the regulations to modify a section heading and to delete a section addressing incorporation by reference because it is no longer the manner in which NTIA promulgates and distributes the NTIA Manual to Federal agencies. These changes do not impact the rights or obligations of the public. The NTIA Manual applies only to Federal agencies. Because these changes impact only Federal agencies, NTIA finds it unnecessary to provide for the notice and comment requirements of 5 U.S.C. 553.

Because notice and opportunity for comment are not required pursuant to 5 U.S.C. 553 or any other law, the analytical requirements of the

Regulatory Flexibility Act (5 U.S.C. 601 *et seq.*) are not applicable. Therefore, a regulatory flexibility analysis is not required and has not been prepared.

Executive Order 13132

This rule does not contain policies having federalism implications as that term is defined in Executive Order 13132.

Regulatory Text

List of Subjects in 47 CFR Part 300

Incorporation by reference; Radio.

■ For the reasons set forth in the preamble, NTIA amends title 47, Part 300 as follows:

PART 300–MANUAL OF REGULATIONS AND PROCEDURES FOR FEDERAL RADIO FREQUENCY MANAGEMENT

■ 1. The authority citation continues to read as follows:

Authority: 47 U.S.C. 901 *et seq.*, Executive Order 12046 (March 27, 1978), 43 FR 13,349, 3 CFR 1978 Comp., p. 158.

■ 2. In 300.1, revise paragraphs (b) and (c) to read as follows:

§ 300.1 Incorporation by reference of the Manual of Regulations and Procedures for Federal Radio Frequency Management.

* * * * *

(b) The Federal agencies shall comply with the requirements set forth in the January 2008 edition of the NTIA Manual, as revised through September 2008, which is incorporated by reference with approval of the Director, Office of the Federal Register in accordance with 5 U.S.C. § 552(a) and 1 CFR part 51.

(c) The NTIA Manual is scheduled for revision in January, May, and September of each year. The revisions are submitted to the Director of the Federal Register for Incorporation by Reference approval. Notices of these changes are printed in the **Federal Register**. The NTIA Manual is available from the Superintendent of Documents, U.S. Government Printing Office, Washington, DC 20402, by referring to Catalog Number 903–008–00000–8. A reference copy of the NTIA Manual, including all revision in effect, is available in the Office of Spectrum Management, 1401 Constitution Avenue, NW., Room 1087, Washington, DC 20230, or call William Mitchell at (202) 482–8124. The NTIA Manual is available online at *http://www.ntia.doc.gov/osmhome/redbook/redbook.html*. The NTIA Manual is on file at the National Archives and Records Administration (NARA). For information on the availability of this material at NARA, call (202) 741 6030, or go to: *http://www.archives.gov/federal__register/code__of__federal__regulations/ibr__locations.html*.

* * * * *

Dated: April 6, 2009.

Kathy D. Smith,

Chief Counsel, National Telecommunications and Information Administration.

[FR Doc. E9–8169 Filed 4–10–09; 8:45 am]

BILLING CODE 3510–60–

Proposed Rules

Federal Register
Vol. 74, No. 69
Monday, April 13, 2009

This section of the FEDERAL REGISTER contains notices to the public of the proposed issuance of rules and regulations. The purpose of these notices is to give interested persons an opportunity to participate in the rule making prior to the adoption of the final rules.

DEPARTMENT OF AGRICULTURE

Animal and Plant Health Inspection Service

7 CFR Part 340

[Docket No. APHIS–2008–0023]

RIN 0579–AC31

Importation, Interstate Movement, and Release Into the Environment of Certain Genetically Engineered Organisms

AGENCY: Animal and Plant Health Inspection Service, USDA.

ACTION: Proposed rule; notice of public meeting and extension of comment period.

SUMMARY: We are advising the public that the Animal and Plant Health Inspection Service is holding an issue-focused public meeting on April 29 and 30, 2009, on its proposed rule, ''Importation, Interstate Movement, and Release Into the Environment of Certain Genetically Engineered Organisms.'' The April 2009 issue meeting will provide an opportunity for interested persons to discuss in a collaborative forum the key concerns that were raised during the comment period on the proposed rule with U.S. Department of Agriculture officials and with one another.

DATES: The comment period of the proposed rule published at 73 FR 60007, Oct. 9, 2008, reopened and extended at 74 FR 2907, Jan. 16, 2009, is reopened and extended until June 29, 2009. The public meeting will be held on April 29 and 30, 2009, from 9 a.m. to 5 p.m. each day. We will consider all comments that we receive on the proposed rule on or before June 29, 2009.

ADDRESSES: The public meeting will be held at the USDA Center at Riverside, 4700 River Road, Riverdale, MD, in Conference Room B. For directions or facilities information, call (301) 734–8010.

You may submit comments by either of the following methods:

- *Federal eRulemaking Portal:* Go to *http://www.regulations.gov/fdmspublic/component/main?main=DocketDetail&d=APHIS-2008-0023* to submit or view comments and to view supporting and related materials available electronically.
- *Postal Mail/Commercial Delivery:* Please send two copies of your comment to Docket No. APHIS–2008–0023, Regulatory Analysis and Development, PPD, APHIS, Station 3A–03.8, 4700 River Road Unit 118, Riverdale, MD 20737–1238. Please state that your comment refers to Docket No. APHIS–2008–0023.

Registration and Other Information: If you plan to attend the public meeting, please register prior to the meeting at *http://web01.aphis.usda.gov/BRS_PublicMeeting.nsf/*. Additional details regarding the agenda and format of the meeting are available on the APHIS Web site at *http://www.aphis.usda.gov/biotechnology/340/340_index.shtml*.

FOR FURTHER INFORMATION CONTACT: Mr. Richard Coker, Biotechnology Regulatory Services, APHIS, 4700 River Road Unit 147, Riverdale, MD 20737–1238; (301) 734–5720.

SUPPLEMENTARY INFORMATION:

Background

On October 9, 2008, the Animal and Plant Health Inspection Service (APHIS) published in the **Federal Register** (73 FR 60007–60048, Docket No. APHIS–2008–0023) a proposal [1] to revise our regulations in 7 CFR part 340 regarding the importation, interstate movement, and environmental release of certain genetically engineered (GE) organisms. The proposed revisions would bring the regulations into alignment with authorities of the Plant Protection Act (7 U.S.C. 7701 *et seq.*) and update the regulations in response to advances in genetic science and technology and our accumulated experience in implementing the current regulations. APHIS sought public comment on the proposal from October 9, 2008, to November 24, 2008.

On January 16, 2009, APHIS published in the **Federal Register** (74 FR 2907–2909, Docket No. APHIS–2008–0023) a notice announcing the reopening of the comment period for the proposed rule for an additional 60 days and particularly seeking additional comments on the following four issues:

Issue 1: Scope of the regulation and which GE organisms should be regulated.

Issue 2: Incorporation into the APHIS part 340 regulations the Plant Protection Act's noxious weed authority.

Issue 3: Elimination of the notification procedure and revision of the permit procedure.

Issue 4: Environmental release permit categories and regulation of GE crops that produce pharmaceutical and industrial compounds.

All four issues were among those that have been raised in the comments we have received so far on the proposed rule. In some cases commenters identified concerns about these issues, but did not provide specific suggestions as to how the proposed rule could be modified to address these concerns. By extending the comment period, APHIS is seeking to increase the transparency of the rulemaking process and elicit more specific information and detailed suggestions regarding these issues. We noted in the January 2009 notice reopening the comment period that APHIS intends to hold an additional public meeting on the proposed rule during the extended public comment period. To ensure that we identified the full range of topics for the April meeting's agenda, we held a scoping session on March 13, 2009. That scoping session was announced in a notice published in the **Federal Register** on March 11, 2009 (74 FR 10517–10518, Docket No. APHIS–2008–0023).

The March 13, 2009, scoping session began with a discussion of the topics to be included on the agenda for the April 2009 meeting, including the four specific issues described above on which the Agency is seeking comment. Those four issues will be discussed during the April 2009 meeting, along with other significant issues deemed appropriate by APHIS based on suggestions offered by those who attended the March 2009 scoping session. The meeting participants at the scoping session also offered suggestions regarding collaborative meeting formats that could help ensure that the agenda issues will be frankly and fully explored during the April 2009 meeting.

[1] To view the proposed rule, supporting documents, and the comments we have received, go to *http://www.regulations.gov/fdmspublic/component/main?main=DocketDetail&d=APHIS-2008-0023*.

This issue-focused meeting will be open to the public. The proceedings will be transcribed, and the transcripts will be made part of the rulemaking record. The meeting is intended to provide a forum for all interested parties to attend and participate in all the discussions to foster focused, substantive dialogue on the key issues.

Those wishing to attend the April 29 and 30, 2009, meeting may register on the Internet at *http://web01.aphis.usda.gov/BRS_PublicMeeting.nsf/*. If you require a sign language interpreter or other special accommodations, you may provide this information when you register or by contacting the person listed under **FOR FURTHER INFORMATION CONTACT.**

Parking and Security Procedures

Please note that a fee of $3.00 in exact change is required to enter the parking lot at the USDA Center at Riverside. The machine accepts $1 bills or quarters.

Upon entering the building, visitors should inform security personnel that they are attending the 340 Proposed Rule public meeting. State-issued photo identification is required and all bags will be screened. Security personnel will direct visitors to the registration tables located outside of Conference Room B on the first floor. Registration upon arrival is required for all participants.

Extension of Comment Period

In the March 2009 notice that announced the scoping meeting described above, we also announced that the comment period for the proposed rule will be extended for 60 days following the April meeting, and that the new date for the close of the comment period would be provided in the notice announcing the date and other details for the April 2009 meeting. The new date for the close of the comment period will be June 29, 2009, which is 60 days after April 30, 2009, the second day of our public meeting. Persons wishing to submit written comments on the proposed rule may continue to do so until June 29, 2009, using either of the methods described under **ADDRESSES** above.

Done in Washington, DC, this 7th day of April 2009.

Kevin Shea,

Acting Administrator, Animal and Plant Health Inspection Service.

[FR Doc. E9–8352 Filed 4–10–09; 8:45 am]

BILLING CODE 3410–34–P

DEPARTMENT OF AGRICULTURE

Agricultural Marketing Service

7 CFR Part 905

[Docket No. AO–85–A10; AMS–FV–07–0132; FV08–905–1]

Oranges, Grapefruit, Tangerines, and Tangelos Grown in Florida; Secretary's Decision and Referendum Order on Proposed Amendments to Marketing Agreement 84 and Order No. 905

AGENCY: Agricultural Marketing Service, USDA.

ACTION: Proposed rule and referendum order.

SUMMARY: This decision proposes amendments to Marketing Agreement No. 84 and Order No. 905 (order), which regulate the handling of oranges, grapefruit, tangerines, and tangelos (citrus) grown in Florida; and provides growers with the opportunity to vote in a referendum to determine if they favor the changes. The amendments are based on proposals by the Citrus Administrative Committee (committee), which is responsible for local administration of the order. These amendments would: (1) Modify committee representation by cooperative entities; (2) allow substitute alternates to temporarily represent absent members at committee meetings; (3) authorize the committee to conduct meetings by telephone or other means of communication; and (4) authorize the committee to conduct research and promotion programs, including paid advertising, for fresh Florida citrus. The amendments are intended to improve the operation and administration of the order and provide the industry with additional tools for the marketing of fresh citrus.

DATES: The referendum will be conducted from May 4 through May 18, 2009. The representative period for the purpose of the referendum is August 1, 2007, through July 31, 2008.

ADDRESSES: Marketing Order Administration Branch, Fruit and Vegetable Programs, AMS, USDA, 1220 SW. Third Avenue, Room 385, Portland, OR 97204.

FOR FURTHER INFORMATION CONTACT: Melissa Schmaedick, Marketing Order Administration Branch, Fruit and Vegetable Programs, AMS, USDA, 1220 SW. Third Avenue, Room 385, Portland, Oregon 97204; Telephone: (503) 326–2724, Fax: (503) 326–7440, or e-mail: *Melissa.Schmaedick@ams.usda.gov*; or Laurel May, Marketing Order Administration Branch, Fruit and Vegetable Programs, AMS, USDA, 1400 Independence Avenue, SW., Stop 0237, Washington, DC 20250–0237; Telephone: (202) 720–2491, fax: (202) 720–8938, or e-mail: *Laurel.May@ams.usda.gov*.

Small businesses may request information on this proceeding by contacting Jay Guerber, Marketing Order Administration Branch, Fruit and Vegetable Programs, AMS, USDA, 1400 Independence Avenue, SW., Stop 0237, Washington, DC 20250–0237; Telephone: (202) 720–2491, fax: (202) 720–8938, e-mail: *Jay.Guerber@ams.usda.gov*.

SUPPLEMENTARY INFORMATION: Prior documents in this proceeding: Notice of Hearing issued on January 24, 2008, and published in the January 29, 2008, issue of the **Federal Register** (73 FR 5130), and a Recommended Decision issued on December 19, 2008, and published in the December 24, 2008, issue of the **Federal Register** (73 FR 79028).

This action is governed by the provisions of sections 556 and 557 of title 5 of the United States Code and is therefore excluded from the requirements of Executive Order 12866.

Preliminary Statement

The proposed amendments are based on the record of a public hearing held February 12, 2008, in Winter Haven, Florida, to consider such amendments to the order. The hearing was held pursuant to the provisions of the Agricultural Marketing Agreement Act of 1937, as amended (7 U.S.C. 601–674), hereinafter referred to as the ''Act,'' and the applicable rules of practice and procedure governing the formulation of marketing agreements and orders (7 CFR part 900). The Notice of Hearing was published in the **Federal Register** on January 29, 2008 (73 FR 5130), and contained amendment proposals submitted by the committee.

The amendments included in this decision would:

1. Modify committee representation by cooperative entities;
2. Allow substitute alternates to temporarily represent absent members at committee meetings;
3. Authorize the committee to conduct meetings by telephone or other means of communication; and
4. Add authority for research and promotion programs, including paid advertising, for fresh Florida citrus.

The Agricultural Marketing Service (AMS) also proposed to make such changes to the order as may be necessary, if any of the proposed changes are adopted, so that all of the order's provisions conform to the

effectuated amendments. AMS proposed replacing the word ''he'' in the second sentence of § 905.22(a)(2) with ''he and she'', and replacing the word ''his'' in the last sentence of § 905.22(b)(2) with the words ''his or her'' to conform to other proposed changes to that section.

Upon the basis of evidence introduced at the hearing and the record thereof, the Administrator of AMS on December 19, 2008, filed with the Hearing Clerk, U.S. Department of Agriculture (USDA), a Recommended Decision and Opportunity to File Written Exceptions thereto by January 23, 2009. None were filed.

Small Business Considerations

Pursuant to the requirements set forth in the Regulatory Flexibility Act (5 U.S.C. 601–612) (RFA), AMS has considered the economic impact of this action on small entities. Accordingly, AMS has prepared this initial regulatory flexibility analysis.

The purpose of the RFA is to fit regulatory actions to the scale of business subject to such actions so that small businesses will not be unduly or disproportionately burdened. Marketing orders and amendments thereto are unique in that they are normally brought about through group action of essentially small entities for their own benefit.

Small agricultural service firms, which include handlers regulated under the order, have been defined by the Small Business Administration (SBA) (13 CFR 121.201) as those having annual receipts of less than $7,000,000. Small agricultural producers have been defined as those with annual receipts of less than $750,000.

There are approximately 48 handlers of fresh citrus subject to regulation under the order and approximately 7,700 producers of fresh citrus in the regulated area. Information provided at the hearing indicates that over 90 percent of the handlers would be considered small agricultural service firms. Hearing testimony also suggests that the majority of producers would also be considered small entities according to the SBA's definition.

The order regulates the handling of fresh citrus grown in the state of Florida. Total bearing citrus acreage has declined from a peak of approximately 800,000 acres in 1996–97 to about 550,000 acres in 2006–07, largely due to hurricane damage and the removal of diseased citrus trees. Approximately 7.236 million tons of citrus were produced in Florida during the 2006–07 season—a decline of approximately 6 million tons compared to the 1996–97 season. According to evidence provided at the hearing, approximately 10 percent of Florida citrus is used in the fresh market, while the remainder is used in the production of processed juice products. Generally, 40 percent of Florida's fresh citrus is shipped to export markets, including the Pacific Rim countries, Europe, and Canada.

Under the order, outgoing quality regulations are established for fresh citrus shipments, and statistical information is collected. Program activities administered by the committee are designed to support large and small citrus producers and handlers. The 18-member committee is comprised of both producer and handler representatives from the production area, as well as a public member. Committee meetings where regulatory recommendations and other decisions are made are open to the public. All members are able to participate in committee deliberations, and each committee member has an equal vote. Others in attendance at meetings are also allowed to express their views.

After discussions within the citrus industry, the committee considered developing its own research and marketing promotion programs focusing on fresh Florida citrus. An amendment study subcommittee was formed to explore this idea and other possible order revisions. The subcommittee developed a list of proposed amendments to the order, which was then presented to the committee and shared with other industry organizations. The proposed amendments were also posted on the committee's Web site for review by the Florida citrus industry at large.

The committee met to review and discuss the subcommittee's proposals at its meeting on May 29, 2007. At that time, the committee voted unanimously to support the four proposed amendments that were forwarded to AMS.

The proposed amendments are intended to provide the committee and the industry with additional flexibility in administering the order and producing and marketing fresh Florida citrus. Record evidence indicates that the proposals are intended to benefit all producers and handlers under the order, regardless of size.

All producer and handler witnesses supported the proposed amendments at the hearing. Some witnesses commented on the implications of implementing specific marketing, research, and development programs. In that context, witnesses stated that they expected the benefits to producers and handlers to outweigh any potential costs.

A description of the proposed amendments and their anticipated economic impact on small and large entities is discussed below.

Proposal 1—Cooperative Representation

Proposal 1 would amend the order by reducing the required number of cooperative producer and cooperative handler seats on the committee from three each to two each.

At the time the order was promulgated, there were numerous cooperative entities in the industry. The committee's original structure was designed to afford proportional representation for cooperative producers and handlers on the committee. The shrinking number of cooperatives entities, especially cooperative marketing entities, over time has prompted the committee to evaluate the appropriateness of the current committee structure. The committee believes that reducing the number of required cooperative seats on the committee would better reflect the current composition of the industry. The reduction would ensure that the interests of all large and small producers and handlers, whether independent or members of cooperatives, are represented appropriately during committee deliberations. Adoption of the proposed amendment would have no economic impact on producers or handlers of any size.

Proposal 2—Substitute Alternates

Proposal 2 would amend the order by allowing members who are unable to attend committee meetings to designate available alternates to represent them if their own alternates are also unavailable in order to achieve a quorum. If members are unable to designate substitute alternates, the committee could designate substitutes at the meeting if necessary to secure a quorum. Substitute alternates would be required to represent the same group affiliation (producer or handler) as the absent members and alternates. Under current order provisions, only a member's respective alternate may represent the member if the member is unable to attend a meeting. There is no provision for a situation in which both the member and his or her alternate are unavailable for a meeting. In the past, meetings have been cancelled at the last minute because attendance was insufficient to meet quorum requirements.

If implemented, the proposed amendment would allow alternates not otherwise representing absent members to represent other members at

committee meetings in order to secure a quorum. This would help ensure that quorum requirements could be met and that committee business could be addressed in a timely manner. This amendment would have no adverse economic impact on producers or handlers of any size.

Proposal Number 3—Telephone Meetings

Proposal 3 would amend the order by adding authority to conduct committee meetings by telephone or other means of communication. Currently, the committee is limited to meeting in person, with provision for emergency voting by telephone. This amendment would give the committee greater flexibility in scheduling meetings and would be consistent with current practices in other citrus industry settings.

Witnesses stated that using modern communication technology would allow the committee to respond more quickly to urgent industry needs and would provide greater access to meetings by members and other industry participants. Greater meeting flexibility would make it easier for the committee to hold additional meetings where there is a need for lengthier discussion and consensus building. The quorum and voting requirements specified for assembled meetings would also apply to meetings held via telephone or teleconference. The votes of members participating by telephone or other means of communication would be confirmed in writing. Faxes and e-mails would be considered acceptable forms of written vote confirmation by the committee.

This amendment is expected to benefit producers and handlers of all sizes by improving committee efficiencies, encouraging greater participation in industry deliberations and is not expected to result in any significant increased costs to producers or handlers.

Proposal Number 4—Research and Promotion

Proposal 4 would amend the order by adding authority to establish research and promotion programs. If this authority was implemented, the committee would be able to address the specific needs of the Florida fresh citrus industry by recommending, conducting, and funding research projects and promotional programs, including paid advertising, that focus on the production, handling, and marketing of fresh citrus.

Witnesses testified that the committee's assessment rate would increase to cover the costs of any newly authorized research and promotion projects, and that there may be an offset by decreases in payments by the industry to fund projects through other entities. Any increased assessment costs would be based on the volume of fresh citrus shipped by each handler. Therefore, any increased costs would be applied proportionately to all handlers.

Witnesses testified that the benefits expected to accrue to producers and handlers following implementation of this amendment would outweigh the costs. Witnesses advocated the establishment of production research programs that would assist with the development of new varieties and post-harvest handling methods to improve the marketability of fresh Florida citrus. Witnesses expect that marketing programs specific to fresh citrus would increase consumer demand and sales, which would in turn increase returns to producers and handlers. There was unanimous support for this proposal from witnesses at the hearing.

Interested persons were invited to present evidence at the hearing on the probable regulatory and informational impact of the proposed amendments to the order on small entities. The record evidence is that implementation of the proposals to reallocate membership seats, authorize the use of substitute alternates, and authorize use of modern communication technology at meetings would have little or no impact on producers and handlers. Adding authority to conduct research and promotion programs would result in additional costs being imposed on handlers once implemented. Evidence provided at the hearing shows that committee expenses, and therefore handler assessments, would increase with the implementation of the proposal to authorize research and promotion programs. However, the record indicates that there may be an offset by decreases in payments to other industry entities now conducting research. Improved production and marketing strategies developed under the authorized programs would be expected to outweigh any additional costs to the Florida fresh citrus industry. In addition, any increased costs would be proportional to a handler's size and would not unduly or disproportionately impact small entities.

USDA has not identified any relevant Federal rules that duplicate, overlap or conflict with this proposed rule. These amendments are intended to improve the operation and administration of the order and to assist in the marketing of fresh Florida citrus.

Paperwork Reduction Act

Information collection requirements for Part 905 are currently approved by the Office of Management and Budget (OMB), under OMB Number 0581–0189—''Generic OMB Fruit Crops.'' No changes in these requirements are anticipated as a result of this proceeding. Should any such changes become necessary, they would be submitted to OMB for approval.

As with all Federal marketing order programs, reports and forms are periodically reviewed to reduce information requirements and duplication by industry and public sector agencies.

AMS is committed to complying with the Government Paperwork Elimination Act (GPEA), which requires Government agencies in general to provide the public the option of submitting information or transacting business electronically to the maximum extent possible.

AMS is committed to complying with the E-Government Act, to promote the use of the Internet and other information technologies to provide increased opportunities for citizen access to Government information and services, and for other purposes.

Civil Justice Reform

The amendments to Marketing Agreement No. 84 and Marketing Order No. 905 proposed herein have been reviewed under Executive Order 12988, Civil Justice Reform. They are not intended to have retroactive effect. If adopted, the proposed amendments would not preempt any State or local laws, regulations, or policies, unless they present an irreconcilable conflict with this proposal.

The Act provides that administrative proceedings must be exhausted before parties may file suit in court. Under section 608c(15)(A) of the Act, any handler subject to an order may file with USDA a petition stating that the order, any provision of the order, or any obligation imposed in connection with the order is not in accordance with law and request a modification of the order or to be exempted therefrom. A handler is afforded the opportunity for a hearing on the petition. After the hearing, USDA would rule on the petition. The Act provides that the district court of the United States in any district in which the handler is an inhabitant, or has his or her principal place of business, has jurisdiction to review USDA's ruling on the petition, provided an action is filed no later than 20 days after the date of the entry of the ruling.

Findings and Conclusions

The findings and conclusions, rulings, and general findings and determinations included in the Recommended Decision set forth in the December 24, 2008, issue of the **Federal Register** are hereby approved and adopted.

Marketing Agreement and Order

Annexed hereto and made a part hereof is the document entitled ''Order Amending the Order Regulating the Handling of Oranges, Grapefruit, Tangerines, and Tangelos Grown in Florida.'' This document has been decided upon as the detailed and appropriate means of effectuating the foregoing findings and conclusions.

It is hereby ordered, that this entire decision be published in the **Federal Register**.

Referendum Order

It is hereby directed that a referendum be conducted in accordance with the procedure for the conduct of referenda (7 CFR part 900.400–407) to determine whether the annexed order amending the order regulating the handling of oranges, grapefruit, tangerines, and tangelos grown in Florida is approved or favored by producers, as defined under the terms of the order, who during the representative period where engaged in the production of citrus in the production area.

The representative period for the conduct of such referendum is hereby determined to be August 1, 2007, though July 31, 2008.

The agents of the Secretary to conduct such referendum are hereby designated to be Christian Nissen and Doris Jamieson, Southeast Marketing Field Office, Marketing Order Administration Branch, Fruit and Vegetable Programs, AMS, USDA; Telephone: (863) 324–3375, Fax: (863) 325–8793, or E-mail: *Christian.Nissen@ams.usda.gov* or *Doris.Jamieson@ams.usda.gov*, respectively.

List of Subjects in 7 CFR Part 905

Grapefruit, Marketing agreements, Oranges, Reporting and recordkeeping requirements, Tangelos, Tangerines.

Dated: April 6, 2009.

Robert C. Keeney,

Acting Associate Administrator.

Order Amending the Order Regulating the Handling of Oranges, Grapefruit, Tangerines, and Tangelos Grown in Florida [1]

Findings and Determinations

The findings and determinations hereinafter set forth are supplementary to the findings and determinations that were previously made in connection with the issuance of the marketing order; and all said previous findings and determinations are hereby ratified and affirmed, except insofar as such findings and determinations may be in conflict with the findings and determinations set forth herein.

(a) Findings and Determinations Upon the Basis of the Hearing Record.

Pursuant to the provisions of the Agricultural marketing Agreement Act of 1937, as amended (7 U.S.C. 601–612), and the applicable rules of practice and procedure effective thereunder (7 CFR part 900), a public hearing was held upon proposed further amendment of Marketing Agreement No. 84 and Marketing Order No. 905, regulating the handling of oranges, grapefruit, tangerines, and tangelos grown in Florida.

Upon the basis of the record, it is found that:

(1) The marketing agreement and order, as amended, and as hereby proposed to be further amended, and all of the terms and conditions thereof, would tend to effectuate the declared policy of the Act;

(2) The marketing agreement and order, as amended, and as hereby proposed to be further amended, regulate the handling of oranges, grapefruit, tangerines, and tangelos grown in the production area in the same manner as, and are applicable only to, persons in the respective classes of commercial and industrial activity specified in the marketing agreement and order upon which a hearing has been held;

(3) The marketing agreement and order, as amended, and as hereby proposed to be further amended, are limited in their application to the smallest regional production area that is practicable, consistent with carrying out the declared policy of the Act, and the issuance of several orders applicable to subdivisions of the production area would not effectively carry out the declared policy of the Act;

(4) The marketing agreement and order, as amended, and as hereby proposed to be further amended, prescribe, insofar as practicable, such different terms applicable to different parts of the production area as are necessary to give due recognition to the differences in the production and marketing of oranges, grapefruit, tangerines, and tangelos grown in the production area; and

(5) All handling of oranges, grapefruit, tangerines, and tangelos grown in the production area as defined in the marketing agreement and order is in the current of interstate or foreign commerce or directly burdens, obstructs, or affects such commerce.

Order Relative to Handling

It is therefore ordered, That on and after the effective date hereof, all handling of oranges, grapefruit, tangerines, and tangelos grown in Florida shall be in conformity to, and in compliance with, the terms and conditions of the said order as hereby proposed to be amended as follows:

The provisions of the proposed marketing agreement and order amending the order contained in the Recommended Decision issued by the Administrator on December 19, 2008, and published in the **Federal Register** on December 24, 2008, will be and are the terms and provisions of this order amending the order and are set forth in full herein.

PART 905—ORANGES, GRAPEFRUIT, TANGERINES, AND TANGELOS GROWN IN FLORIDA

1. The authority citation for 7 CFR part 905 continues to read as follows:

Authority: 7 U.S.C. 601–674.

2. Amend § 905.22 by revising paragraphs (a)(2) and (b)(2) to read as follows:

§ 905.22 Nominations.

(a) * * *

(1) * * *

(2) Each nominee shall be a producer in the district from which he or she is nominated. In voting for nominees, each producer shall be entitled to cast one vote for each nominee in each of the districts in which he or she is a producer. At least two of the nominees and their alternates so nominated shall be affiliated with a bona fide cooperative marketing organization.

(b) * * *

(1) * * *

(2) Nomination of at least two members and their alternates shall be

[1] This order shall not become effective unless and until the requirements of § 900.14 of the rules of practice and procedure governing proceedings to formulate marketing agreements and marketing orders have been met.

made by bona fide cooperative marketing organizations which are handlers. Nominations for not more than six members and their alternates shall be made by handlers who are not so affiliated. In voting for nominees, each handler or his or her authorized representative shall be entitled to cast one vote, which shall be weighted by the volume of fruit by such handler during the then current fiscal period.

3. Revise § 905.23 to read as follows:

§ 905.23 Selection.

(a) From the nominations made pursuant to § 905.22(a) or from other qualified persons, the Secretary shall select one member and one alternate member to represent District 2 and two members and two alternate members each to represent Districts 1, 3, 4, and 5 or such other number of members and alternate members from each district as may be prescribed pursuant to § 905.14. At least two such members and their alternates shall be affiliated with bona fide cooperative marketing organizations.

(b) From the nominations made pursuant to § 905.22 (b) or from other qualified persons, the Secretary shall select at least two members and their alternates to represent bona fide cooperative marketing organizations which are handlers, and the remaining members and their alternates to represent handlers who are not so affiliated.

4. In § 905.29, redesignate paragraph (b) as paragraph (c), and add a new paragraph (b) to read as follows:

§ 905.29 Inability of members to serve.

* * * * *

(b) If both a member and his or her respective alternate are unable to attend a committee meeting, such member may designate another alternate to act in his or her place in order to obtain a quorum: *Provided*, That such alternate member represents the same group affiliation as the absent member. If the member is unable to designate such an alternate, the committee members present may designate such alternate.

* * * * *

5. Revise paragraph (c) of § 905.34 to read as follows:

§ 905.34 Procedure of committees.

* * * * *

(c) The committee may provide for meeting by telephone, telegraph, or other means of communication, and any vote cast at such a meeting shall be promptly confirmed in writing: *Provided*, That if any assembled meeting is held, all votes shall be cast in person.

* * * * *

6. Add a new § 905.54 to read as follows:

§ 905.54 Marketing, research and development.

The committee may, with the approval of the Secretary, establish, or provide for the establishment of, projects including production research, marketing research and development projects, and marketing promotion including paid advertising, designed to assist, improve, or promote the marketing, distribution, and consumption or efficient production of fruit. The expenses of such projects shall be paid by funds collected pursuant to § 905.41. Upon conclusion of each project, but at least annually, the committee shall summarize the program status and accomplishments to its members and the Secretary. A similar report to the committee shall be required of any contracting party on any project carried out under this section. Also, for each project, the contracting party shall be required to maintain records of money received and expenditures, and such shall be available to the committee and the Secretary.

[FR Doc. E9–8171 Filed 4–10–09; 8:45 am]

BILLING CODE 3410–02–P

NUCLEAR REGULATORY COMMISSION

10 CFR Part 50

[Docket No. PRM–50–77; NRC–2002–0020]

Bob Christie; Consideration of Petition in Rulemaking Process

AGENCY: Nuclear Regulatory Commission.

ACTION: Closure of petition for rulemaking docket.

SUMMARY: The Nuclear Regulatory Commission (NRC) will consider the issues raised in a petition for rulemaking (PRM) submitted by Bob Christie (petitioner) in the NRC's rulemaking process. The petition was dated May 2, 2002, and was docketed as PRM–50–77. The petitioner requested that the NRC amend its regulations at 10 CFR Part 50, Appendix A, to eliminate the requirement for assuming a loss-of-offsite power (LOOP) coincident with postulated accidents. The petitioner believes this requirement is detrimental to safety because it results in fast start time requirements for emergency diesel generators (EDG) and because it requires operator training to focus on unrealistic events.

DATES: The docket for the petition for rulemaking PRM–50–77 is closed on April 13, 2009.

ADDRESSES: You can access publicly available documents related to this petition for rulemaking using the following methods:

Federal e-Rulemaking Portal: Further NRC action on the issues raised by this petition will be considered in the rulemaking activity directed at decoupling an assumed LOOP from a coincident loss-of-coolant accident (LOCA) as currently required by 10 CFR Part 50, Appendix A, Criterion 35. This rulemaking activity is entitled, ''Decoupling of Assumed Loss of Offsite Power from Loss-of-Coolant Accident,'' in NUREG–0936, ''NRC Regulatory Agenda: Semiannual Report,'' and is designated with rulemaking identification number RIN 3150–AH43. Information on this rulemaking activity can be monitored at the Federal rulemaking portal, *http://www.regulations.gov*, by searching on rulemaking docket ID NRC–2008–0602. The regulatory history regarding PRM–50–77, including the public comment received, can be found by searching on docket ID NRC–2002–0020. Address questions about NRC dockets to Carol Gallagher 301–415–5905; e-mail *Carol.Gallagher@nrc.gov*.

NRC's Public Document Room (PDR): The public may examine and have copied for a fee, publicly available documents at the NRC's PDR, Public File Area Room O1–F21, One White Flint North, 11555 Rockville Pike, Rockville, Maryland 20852.

NRC's Agencywide Document Access and Management System (ADAMS): Publicly available documents created or received at the NRC are available electronically at the NRC's Electronic Reading Room at *http://www.nrc.gov/NRC/reading-rm/adams.html*. From this page, the public can gain entry into ADAMS, which provides text and image files of NRC's public documents. If you do not have access to ADAMS or if there are any problems in accessing the documents located in ADAMS, contact the NRC PDR Reference staff at 1–800–397–4209, 301–415–4737, or by e-mail at *PDR.resource@nrc.gov*.

FOR FURTHER INFORMATION CONTACT: Barry Miller, Mail Stop O–9E3, Office of Nuclear Reactor Regulation, United States Nuclear Regulatory Commission, Washington, DC 20555–0001; telephone (301) 415–4117, or e-mail *Barry.Miller@nrc.gov*.

SUPPLEMENTARY INFORMATION:

The Petition

The NRC received a petition for rulemaking (ADAMS Accession No. ML082530041) from Bob Christie (the petitioner) dated May 2, 2002, which was docketed as PRM–50–77. The petitioner requested that the NRC amend its regulations to eliminate the requirement for assuming a LOOP coincident with postulated accidents. The petitioner believes this requirement is detrimental to safety because it requires fast start times for emergency diesel generators (EDG) and because it requires operator training for unrealistic events. The petitioner proposed specific changes to several of the General Design Criteria at 10 CFR part 50, appendix A, which, if implemented, would accomplish the petition's request. These General Design Criteria include: Criterion 17—Electric power systems; Criterion 35—Emergency core cooling; Criterion 38—Containment heat removal; Criterion 41—Containment atmosphere cleanup; and Criterion 44—Cooling water.

On June 13, 2002, (67 FR 40622), the NRC published a notice of receipt for this petition in the **Federal Register** and requested public comment. The public comment period ended on August 27, 2002. One comment letter was received; it was in support of the petition. The comment letter can be found by following the instructions given in the **ADDRESSES** section of this document.

Resolution of Petition

The NRC will consider the issues raised in PRM–50–77, along with the comment submitted on PRM–50–77, in the ongoing rulemaking activity directed at decoupling an assumed LOOP from a coincident LOCA as currently required by 10 CFR part 50, appendix A, Criterion 35. The NRC believes that the underlying technical considerations regarding a postulated accident coincident with a LOOP are sufficiently related to this ongoing rulemaking activity; therefore, the issues raised in PRM–50–77 are being considered in the rulemaking activity.

The NRC is continuing work to develop the technical basis for this rulemaking. Although the NRC will consider the issues raised in the petition, the petitioner's concerns may not be addressed exactly as the petitioner has requested. After the conclusion of the NRC's development of the technical basis for the rule, the NRC will determine whether to adopt the petitioner's requested rulemaking changes. During the rulemaking process, the NRC will solicit comments from the public and will consider all comments before issuing a final rule.

If the ongoing work to establish the technical basis for this rulemaking does not support the issuance of a proposed rule, the NRC will issue a document in the **Federal Register** that addresses why the petitioner's requested rulemaking changes were not adopted by the NRC. With this action, the NRC closes the docket for PRM–50–77.

Dated at Rockville, Maryland, this 26th day of March 2009.

For the Nuclear Regulatory Commission.

Bruce S. Mallett,

Acting Executive Director for Operations.

[FR Doc. E9–8319 Filed 4–10–09; 8:45 am]

BILLING CODE 7590–01–P

DEPARTMENT OF TRANSPORTATION

Federal Aviation Administration

14 CFR Part 39

[Docket No. FAA–2007–0096; Directorate Identifier 2007–NE–39–AD]

RIN 2120–AA64

Airworthiness Directives; Honeywell International Inc. ALF502 Series and LF507 Series Turbofan Engines

AGENCY: Federal Aviation Administration (FAA), Department of Transportation (DOT).

ACTION: Notice of proposed rulemaking (NPRM).

SUMMARY: The FAA proposes to supersede an existing airworthiness directive (AD) for Honeywell International Inc. ALF502 series and LF507 series turbofan engines with certain fuel manifold assemblies installed. That AD currently requires initial and repetitive on-wing eddy current or in-shop fluorescent penetrant inspections of certain part number (P/N) fuel manifold assemblies for cracks, and replacement of cracked fuel manifolds with serviceable manifolds. This proposed AD would continue to require inspecting those fuel manifolds for cracks, would also add leak checks of certain additional P/N fuel manifolds, and would specify replacement of the affected manifolds as an optional terminating action in lieu of the repetitive inspections. This proposed AD results from reports of fire in the engine nacelle. We are proposing this AD to detect cracks in certain fuel manifolds and fuel leaks from other fuel manifolds, which could result in a fire in the engine nacelle and a hazard to the aircraft.

DATES: We must receive any comments on this proposed AD by June 12, 2009.

ADDRESSES: Use one of the following addresses to comment on this proposed AD.

- *Government-wide rulemaking Web site:* Go to *http://www.regulations.gov* and follow the instructions for sending your comments electronically.
- *Mail:* Docket Management Facility, U.S. Department of Transportation, West Building Ground Floor, Room W12–140, 1200 New Jersey Avenue, SE., Washington, DC 20590–0001.
- *Hand Delivery:* Deliver to Mail address above between 9 a.m. and 5 p.m., Monday through Friday, except Federal holidays.
- *Fax:* (202) 493–2251.

You can get the service information identified in this proposed AD from Honeywell International, Inc., 111 S 34th St., Phoenix, AZ 85034–2802, U.S.A.; telephone (800) 601–3099.

FOR FURTHER INFORMATION CONTACT: Robert Baitoo, Aerospace Engineer, Los Angeles Aircraft Certification Office, FAA, Transport Airplane Directorate, 3960 Paramount Blvd., Lakewood, CA 90712–4137; e-mail: *robert.baitoo@faa.gov*; telephone (562) 627–5245; fax (562) 627–5210.

SUPPLEMENTARY INFORMATION:

Comments Invited

We invite you to send us any written relevant data, views, or arguments regarding this proposal. Send your comments to an address listed under **ADDRESSES.** Include ''Docket No. FAA–2007–0096; Directorate Identifier 2007–NE–39–AD'' in the subject line of your comments. We specifically invite comments on the overall regulatory, economic, environmental, and energy aspects of the proposed AD. We will consider all comments received by the closing date and may amend the proposed AD in light of those comments.

We will post all comments we receive, without change, to *http://www.regulations.gov*, including any personal information you provide. We will also post a report summarizing each substantive verbal contact with FAA personnel concerning this proposed AD. Using the search function of the Web site, anyone can find and read the comments in any of our dockets, including, if provided, the name of the individual who sent the comment (or signed the comment on behalf of an association, business, labor union, etc.). You may review the DOT's complete Privacy Act Statement in the **Federal Register** published on April 11, 2000 (65 FR 19477–78).

Examining the AD Docket

You may examine the AD docket on the Internet at *http://www.regulations.gov*; or in person at the Docket Operations office between 9 a.m. and 5 p.m., Monday through Friday, except Federal holidays. The AD docket contains this proposed AD, the regulatory evaluation, any comments received, and other information. The street address for the Docket Operations office (telephone (800) 647–5527) is the same as the Mail address provided in the **ADDRESSES** section. Comments will be available in the AD docket shortly after receipt.

Discussion

The FAA proposes to amend 14 CFR part 39 by superseding AD 97–11–05, Amendment 39–10034 (62 FR 28994, May 29, 1997). That AD requires initial and repetitive on-wing eddy current inspection (ECI) or in-shop fluorescent penetrant inspection (FPI) of fuel manifold assemblies for cracks, and replacement of cracked fuel manifolds with serviceable manifolds. In addition, that action proposed an optional terminating action to the repetitive inspections by replacing the fuel manifold assembly with an assembly of a new, improved design, P/N 2–163–620–37 or 2–163–620–38. That AD resulted from reports of cracking of the fuel manifold assembly at the No. 5 scallop location. That condition, if not corrected, could result in fuel leaking from the manifold and a fire in the engine nacelle.

Actions Since AD 97–11–05 Was Issued

Since we issued that AD, we have received reports of about 36 events of fuel leaking at the fuel nozzles on fuel manifold assemblies, P/Ns 2–163–620–37 and 2–163–620–38, due to loosening of the fuel nozzles. Failure to detect and remove a leaking manifold assembly is likely to result in a fire in the engine nacelle and create a hazard to the aircraft.

FAA's Determination and Requirements of the Proposed AD

We have evaluated all pertinent information and identified an unsafe condition that is likely to exist or develop on other products of this same type design. We are proposing this AD, which would require:

- For fuel manifold assemblies, P/Ns 2–163–620–37 or 2–163–620–38, with 1,800 or more cycles-since-new or cycles-since-overhaul, inspecting for leaks per paragraph (g) of this AD, within 300 cycles-in-service after the effective date of this AD, and
- Repeating the inspection within 600 cycles-since-last inspection, and
- Replacing each leaking fuel manifold assembly with a serviceable manifold.

Costs of Compliance

We estimate that this proposed AD would affect 156 engines installed on airplanes of U.S. registry. We also estimate that it would take about 7 work-hours per engine to perform the proposed actions, and that the average labor rate is $80 per work-hour. Required parts would cost about $50,000 per engine. Based on these figures, we estimate the total cost of the proposed AD to U.S. operators to be $7,887,360.

Authority for This Rulemaking

Title 49 of the United States Code specifies the FAA's authority to issue rules on aviation safety. Subtitle I, Section 106, describes the authority of the FAA Administrator. Subtitle VII, Aviation Programs, describes in more detail the scope of the Agency's authority.

We are issuing this rulemaking under the authority described in Subtitle VII, Part A, Subpart III, Section 44701, ''General requirements.'' Under that section, Congress charges the FAA with promoting safe flight of civil aircraft in air commerce by prescribing regulations for practices, methods, and procedures the Administrator finds necessary for safety in air commerce. This regulation is within the scope of that authority because it addresses an unsafe condition that is likely to exist or develop on products identified in this rulemaking action.

Regulatory Findings

We have determined that this proposed AD would not have federalism implications under Executive Order 13132. This proposed AD would not have a substantial direct effect on the States, on the relationship between the national Government and the States, or on the distribution of power and responsibilities among the various levels of government.

For the reasons discussed above, I certify that the proposed AD:

1. Is not a ''significant regulatory action'' under Executive Order 12866;

2. Is not a ''significant rule'' under the DOT Regulatory Policies and Procedures (44 FR 11034, February 26, 1979); and

3. Would not have a significant economic impact, positive or negative, on a substantial number of small entities under the criteria of the Regulatory Flexibility Act.

We prepared a regulatory evaluation of the estimated costs to comply with this proposed AD. You may get a copy of this summary at the address listed under **ADDRESSES.**

List of Subjects in 14 CFR Part 39

Air transportation, Aircraft, Aviation safety, Safety.

The Proposed Amendment

Under the authority delegated to me by the Administrator, the Federal Aviation Administration proposes to amend 14 CFR part 39 as follows:

PART 39—AIRWORTHINESS DIRECTIVES

1. The authority citation for part 39 continues to read as follows:

Authority: 49 U.S.C. 106(g), 40113, 44701.

§ 39.13 [Amended]

2. The FAA amends § 39.13 by removing Amendment 39–10034 (62 FR 28994, May 29, 1997) and by adding a new airworthiness directive to read as follows:

Honeywell International Inc. (Formerly AlliedSignal and Textron-Lycoming): Docket No. FAA–2007–0096; Directorate Identifier 2007–NE–39–AD.

Comments Due Date

(a) The Federal Aviation Administration (FAA) must receive comments on this airworthiness directive (AD) action by June 12, 2009.

Affected ADs

(b) Supersedes AD 97–11–05, Amendment 39–10034.

Applicability

(c) This AD applies to Honeywell International Inc. ALF502L and ALF502R series, and LF507–1F and LF507–1H turbofan engines with fuel manifolds, part numbers (P/Ns) 2–163–620–9, 2–163–620–10, 2–163–620–17, 2–163–620–18, 2–163–620–23, 2–163–620–24, 2–163–620–25, 2–163–620–26, 2–163–620–27, 2–163–620–28, 2–163–620–33, 2–163–620–34, 2–163–620–35, 2–163–620–36, 2–163–620–37, or 2–163–620–38 installed. These engines are installed on, but not limited to, Bombardier CL–600–1A11 and BAE Systems 146–100/A, –200/A, and –300/A, and AVRO 146–RJ70A, –RJ85A, and –RJ100A airplanes.

Unsafe Condition

(d) This AD results from reports of fire in the engine nacelle. We are issuing this AD to detect cracks in certain fuel manifolds and fuel leaks from other fuel manifolds, which could result in a fire in the engine nacelle and a hazard to the aircraft.

Compliance

(e) You are responsible for having the actions required by this AD performed within the compliance times specified unless the actions have already been done.

Initial Inspection for Cracks in Fuel Manifold Assemblies That Have a P/N Listed in Paragraph (c) of This AD, Except P/Ns 2–163–620–37 or 2–163–620–38

(f) Using the following compliance times, perform initial and repetitive on-wing eddy current inspections (ECI) or in-shop fluorescent penetrant inspections (FPI) of fuel manifold assemblies having a P/N listed in the paragraph (c) of this AD, except P/Ns 2–163–620–37 or 2–163–620–38. Use paragraphs 2.A.(1) through 2.A.(3)(d) of the accomplishment instructions of Honeywell International Inc. Service Bulletin (SB) ALF/LF 73–1002, Revision 1, dated March 24, 1997 or original issue dated December 22, 1995, to perform the inspections.

(1) For ALF502L series engines:

(i) For fuel manifold assemblies with 3,250 or more cycles since new (CSN) or unknown CSN on July 28, 1997 (the effective date of AD 97–11–05), inspect at the next hot section inspection (HSI), or 2,000 cycles-in-service (CIS) after July 28, 1997, whichever occurs first.

(ii) For fuel manifold assemblies with less than 3,250 CSN on July 28, 1997, inspect at the next HSI or before accumulating 5,250 CSN, whichever occurs first.

(iii) Thereafter, inspect at HSI intervals not to exceed 2,000 cycles-since-last inspection (CSLI).

(iv) If a fuel manifold assembly is found cracked, prior to further flight, replace the fuel manifold assembly with an FAA approved serviceable assembly.

(2) For ALF502R and LF507 series engines:

(i) For fuel manifold assemblies with 3,250 or more CSN, or unknown CSN, on July 28, 1997, inspect within 1,250 CIS after July 28, 1997.

(ii) For fuel manifold assemblies with less than 3,250 CSN on July 28, 1997, inspect prior to accumulating 4,500 CSN.

(iii) Thereafter, inspect at intervals not to exceed 1,250 CSLI.

(iv) If a fuel manifold assembly is found cracked, before further flight replace the fuel manifold assembly with an FAA approved serviceable assembly.

Initial Inspection for Fuel Leaks, Fuel Manifold Assemblies, P/Ns 2–163–620–37 or 2–163–620–38

(g) For fuel manifold assemblies, P/Ns 2–163–620–37 or 2–163–620–38, with 1,800 or more CSN or cycles-since-overhaul (CSO), inspect for leaks within 300 CIS after the effective date of this AD as follows:

(1) Start engine and let stabilize at ground idle.

(2) With the engine operating, look for fuel leaking from the fuel manifold assembly to the fire shield interface area (see Figure 1). No leaks allowed.

(3) If you find any leaks, shut down the engine and replace the fuel manifold assembly with an FAA approved serviceable assembly.

(4) Shut down engine.

(5) Look for fuel leaking from the fuel manifold assembly to the fire shield interface area (see Figure 1.) No leaks allowed.

(6) If you find any leaks, replace the fuel manifold assembly with an FAA approved serviceable assembly.

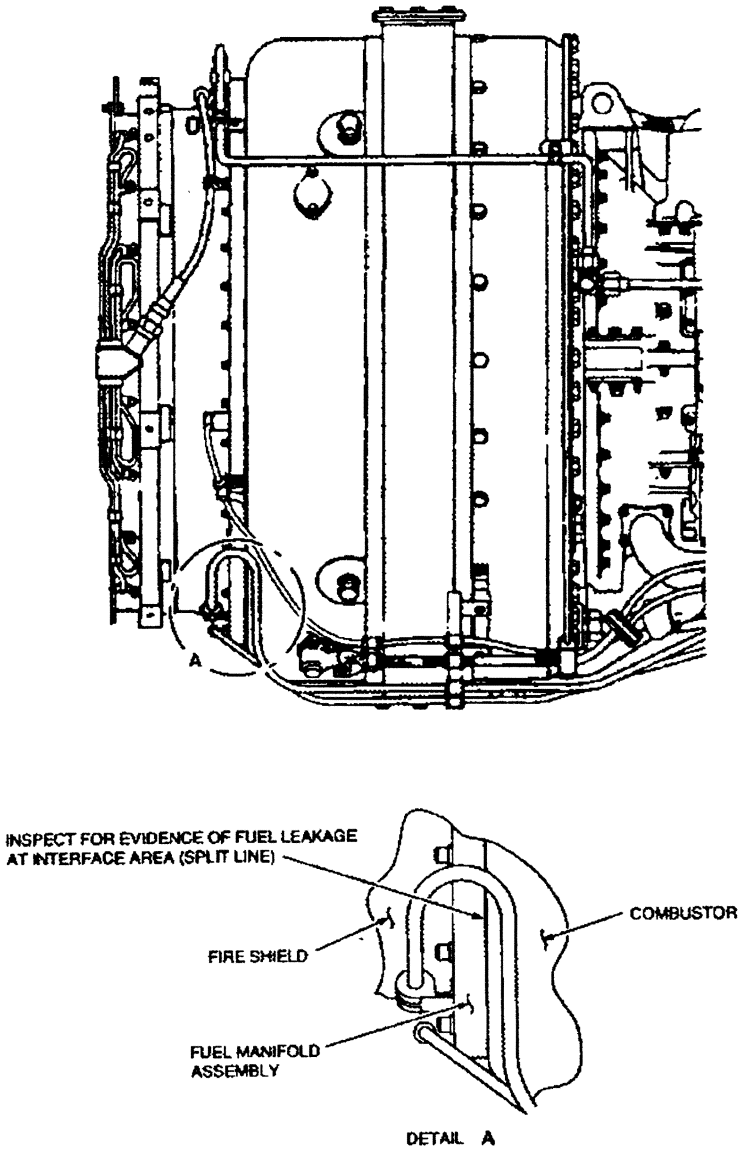

Figure 1 - Fuel Manifold Assembly-to-Fire Shield Interface Area

Repetitive Inspection for Fuel Leaks, Fuel Manifold Assemblies P/Ns 2–163–620–37 and 2–163–620–38

(h) Thereafter, within 600 CSLI, inspect fuel manifold assemblies, P/Ns 2–163–620–37 and 2–163–620–38, for leaks as specified in paragraphs (g)(1) through (g)(6) of this AD.

Optional Terminating Action

(i) Replacing a fuel manifold assembly that has a P/N specified in paragraph (c) of this AD, with a fuel manifold assembly, P/N 2–163–620–39, 2–163–620–40, 2–163–620–41, or 2–163–620–42, or an FAA-approved equivalent part, terminates the repetitive inspection requirement specified in paragraphs (f)(1)(iii), (f)(2)(iii), (g), and (h) of this AD.

Alternative Methods of Compliance

(j) The Manager, Los Angeles Certification Office, has the authority to approve alternative methods of compliance for this AD if requested using the procedures found in 14 CFR 39.19.

Related Information

(k) Honeywell International Inc. Alert Service Bulletin ALF/LF–A72–1084, Revision 2, dated October 10, 2007, and SB ALF/LF 73–1002, Revision 1, dated March 24, 1997, and SB ALF/LF 72–1094, dated April 30, 2004, contains the information necessary to inspect and replace any leaking fuel manifolds.

(l) Contact Robert Baitoo, Aerospace Engineer, Los Angeles Aircraft Certification Office, FAA, Transport Airplane Directorate, 3960 Paramount Blvd., Lakewood, CA 90712–4137; e-mail: *robert.baitoo@faa.gov*; telephone: (562) 627–5245; fax: (562) 627–5210, for more information about this AD.

Issued in Burlington, Massachusetts, on April 6, 2009.

Peter A. White,

Assistant Manager, Engine and Propeller Directorate, Aircraft Certification Service.

[FR Doc. E9–8308 Filed 4–10–09; 8:45 am]

BILLING CODE 4910–13–P

DEPARTMENT OF TRANSPORTATION

Federal Aviation Administration

14 CFR Part 39

[Docket No. FAA–2009–0331; Directorate Identifier 2008–NE–40–AD]

RIN 2120–AA64

Airworthiness Directives; Honeywell International Inc. TFE731 Series Turbofan Engines

AGENCY: Federal Aviation Administration (FAA), Department of Transportation (DOT).

ACTION: Notice of proposed rulemaking (NPRM).

SUMMARY: The FAA proposes to adopt a new airworthiness directive (AD) for Honeywell International Inc. TFE731 series turbofan engines with certain second and third stage low-pressure compressor rotor (LPCR) discs installed. This proposed AD would require removing from service, certain second and third stage LPCR discs, part numbers (P/Ns) 3072396–1, 3072397–1, 3075109–1, or 2075192–1. This proposed AD results from a report of cracks found during a fluorescent penetrant inspection (FPI) of the disc bore. We are proposing this AD to prevent an uncontained failure of a second and third stage LPCR disc due to cracks in the bore, which could result in damage to the airplane.

DATES: We must receive any comments on this proposed AD by June 12, 2009.

ADDRESSES: Use one of the following addresses to comment on this proposed AD.

- *Federal eRulemaking Portal:* Go to *http://www.regulations.gov* and follow the instructions for sending your comments electronically.
- *Mail:* Docket Management Facility, U.S. Department of Transportation, 1200 New Jersey Avenue, SE., West Building Ground Floor, Room W12–140, Washington, DC 20590–0001.
- *Hand Delivery:* Deliver to Mail address above between 9 a.m. and 5 p.m., Monday through Friday, except Federal holidays.
- *Fax:* (202) 493–2251.

You can get the service information identified in this proposed AD from Honeywell Engines and Systems Technical Publications and Distribution, M/S 2101–201, P.O. Box 52170, Phoenix, AZ 85072–2170, telephone: Global Customer Care toll free (800) 601–3099; International callers (602) 365–3099.

FOR FURTHER INFORMATION CONTACT: Joseph Costa, Aerospace Engineer, Los Angeles Aircraft Certification Office, FAA, Transport Airplane Directorate, 3960 Paramount Blvd., Lakewood, CA 90712–4137; e-mail: *joseph.costa@faa.gov*; telephone: (562) 627–5246; fax: (562) 627–5210.

SUPPLEMENTARY INFORMATION:

Comments Invited

We invite you to send us any written relevant data, views, or arguments regarding this proposal. Send your comments to an address listed under **ADDRESSES**. Include ''Docket No. FAA–2009–0331; Directorate Identifier 2008–NE–40–AD'' in the subject line of your comments. We specifically invite comments on the overall regulatory, economic, environmental, and energy aspects of the proposed AD. We will consider all comments received by the closing date and may amend the proposed AD in light of those comments.

We will post all comments we receive, without change, to *http://www.regulations.gov*, including any personal information you provide. We will also post a report summarizing each substantive verbal contact with FAA personnel concerning this proposed AD. Using the search function of the Web site, anyone can find and read the comments in any of our dockets, including, if provided, the name of the individual who sent the comment (or signed the comment on behalf of an association, business, labor union, *etc.*). You may review the DOT's complete Privacy Act Statement in the **Federal Register** published on April 11, 2000 (65 FR 19477–78).

Examining the AD Docket

You may examine the AD docket on the Internet at *http://www.regulations.gov*; or in person at the Docket Operations office between 9 a.m. and 5 p.m., Monday through Friday, except Federal holidays. The AD docket contains this proposed AD, the regulatory evaluation, any comments received, and other information. The street address for the Docket Operations office (telephone (800) 647–5527) is the same as the Mail address provided in the **ADDRESSES** section. Comments will be available in the AD docket shortly after receipt.

Discussion

A routine FPI of a second stage LPCR disc, P/N 3072396–1, revealed three indications in the disc bore. The LPCR disc had accumulated 6,874 cycles-since-new (CSN). All three indications were determined to be cracks initiating from a titanium hard-alpha inclusion incurred during the alloy melting process. Oremet Corporation produced the heat lot, which was part of Heat No. WRT2053, in January 1982. We have determined that other second and third stage LPCR discs made from the same heat lot might also contain similar inclusions that could adversely affect the lives of those LPCR discs. Based on billet stacking and billet orientation, six discs were determined to be adjacent or near the cracked disc. We propose more expedient corrective action for these higher-risk discs than other LPCR discs made from the same heat lot. This condition, if not corrected, could result in an uncontained failure of a second and third stage LPCR disc due to cracks in the bore, which could result in damage to the airplane.

Relevant Service Information

We have reviewed and approved the technical contents of Honeywell International Inc. Alert Service Bulletins (ASBs) TFE731–72–A3748, dated August 21, 2008, and TFE731–72–A3749, dated August 21, 2008. Those ASBs describe procedures for removing certain second and third stage LPCR discs specified by serial number (SN) in the ASBs.

Differences Between the Proposed AD and the Manufacturer's Service Information

Alert Service Bulletins TFE731–72–A3748, dated August 21, 2008, and TFE731–72–A3749, dated August 21, 2008, require removing at the next access, second and third stage LPCR discs that have an SN specified in Table 5 or Table 6 of those ASBs. This proposed AD would require removing those discs that have an SN specified in Table 5 within 100 cycles-in-service (CIS) after the effective date of the proposed AD or at the next access, whichever occurs first. This proposed AD would require removing those discs that have an SN specified in Table 6 within 2,000 CIS after the effective date of the proposed AD or at the next access, whichever occurs first.

FAA's Determination and Requirements of the Proposed AD

We have evaluated all pertinent information and identified an unsafe condition that is likely to exist or develop on other products of this same type design. We are proposing this AD, which would require removing from service engines with LPCR discs that have SN:

- In Table 5 of ASBs TFE731–72–A3748, dated August 21, 2008, or TFE731–72–A3749, dated August 21, 2008, within 100 CIS after the effective date of this proposed AD, and

• In Table 6 of ASBs TFE731–72–A3748, dated August 21, 2008, or TFE731–72–A3749, dated August 21, 2008, within 2,000 CIS or the next access after the effective date of this proposed AD, whichever occurs first.

The proposed AD would require you to use the service information described previously to perform these actions.

Costs of Compliance

We estimate that this proposed AD would affect 27 engines installed on airplanes of U.S. registry. We also estimate that it would take about 4 work-hours per engine to perform the proposed actions during scheduled maintenance and 140 work-hours per engine for the proposed actions during unscheduled maintenance. The average labor rate is $80 per work-hour. Required parts would cost about $31,000 per engine. Based on these figures, we estimate the total cost of the proposed AD to U.S. operators to be $900,000.

Authority for This Rulemaking

Title 49 of the United States Code specifies the FAA's authority to issue rules on aviation safety. Subtitle I, Section 106, describes the authority of the FAA Administrator. Subtitle VII, Aviation Programs, describes in more detail the scope of the Agency's authority.

We are issuing this rulemaking under the authority described in Subtitle VII, Part A, Subpart III, Section 44701, ''General requirements.'' Under that section, Congress charges the FAA with promoting safe flight of civil aircraft in air commerce by prescribing regulations for practices, methods, and procedures the Administrator finds necessary for safety in air commerce. This regulation is within the scope of that authority because it addresses an unsafe condition that is likely to exist or develop on products identified in this rulemaking action.

Regulatory Findings

We have determined that this proposed AD would not have Federalism implications under Executive Order 13132. This proposed AD would not have a substantial direct effect on the States, on the relationship between the national Government and the States, or on the distribution of power and responsibilities among the various levels of government.

For the reasons discussed above, I certify that the proposed AD:

1. Is not a ''significant regulatory action'' under Executive Order 12866;

2. Is not a ''significant rule'' under the DOT Regulatory Policies and Procedures (44 FR 11034, February 26, 1979); and

3. Would not have a significant economic impact, positive or negative, on a substantial number of small entities under the criteria of the Regulatory Flexibility Act.

We prepared a regulatory evaluation of the estimated costs to comply with this proposed AD. You may get a copy of this summary at the address listed under **ADDRESSES**.

List of Subjects in 14 CFR Part 39

Air transportation, Aircraft, Aviation safety, Incorporation by reference, Safety.

The Proposed Amendment

Under the authority delegated to me by the Administrator, the Federal Aviation Administration proposes to amend 14 CFR part 39 as follows:

PART 39—AIRWORTHINESS DIRECTIVES

1. The authority citation for part 39 continues to read as follows:

Authority: 49 U.S.C. 106(g), 40113, 44701.

§ 39.13 [Amended]

2. The FAA amends § 39.13 by adding the following new airworthiness directive:

Honeywell International Inc. (Formerly AlliedSignal Inc., formerly Garret Turbine Engine Company): Docket No. FAA–2009–0331; Directorate Identifier 2008–NE–40–AD.

Comments Due Date

(a) The Federal Aviation Administration (FAA) must receive comments on this airworthiness directive (AD) action by June 12, 2009.

Affected ADs

(b) None.

Applicability

(c) This AD applies to Honeywell International Inc. TFE731–2, TFE731–2A, TFE731–2C, TFE731–3, TFE731–3A, TFE731–3AR, TFE731–3B, TFE731–3BR, TFE731–3C, TFE731–3CR, TFE731–3D, TFE731–3DR, TFE731–3R, TFE731–4, TFE731–4R, TFE731–5, TFE731–5AR, TFE731–5BR, and TFE731–5R series turbofan engines with certain low-pressure compressor rotor (LPCR) discs, part number (P/Ns) 3072396–1, 3072397–1, 3075190–1, or 2075192–1, installed. These engines are installed on, but not limited to, the airplanes listed in Table 1 of this AD.

TABLE 1—INSTALLED ON AIRPLANES BY MANUFACTURER

Manufacturer	Model
Dassault-Aviation or Dassault Aviation	Falcon 10 (Falcon 100) and Mystere-Falcon 20, 50, 900 and MF900 series.
Cessna Aircraft Company	Model 650, Citation III, VI, and VII.
Gulfstream Aerospace LP	1125 Westwind Astra.
Israel Aircraft Industries	1124 and 1124A (Westwind).
Learjet Inc.	31, 31A, 35, 35A, 36, 36A, 55, 55B, 55C, and M31.
Lockheed Martin Corporation (formerly Lockheed-Georgia)	1329–23A, 1329–23D, 1329–23E, and 1329–25.
Raytheon Corporate Jets (formerly British Aerospace and Hawker Beechcraft Corporation).	DH.125 Series 1A, 3A, and 3A/RA, HS.125 Series F3B and F3B/RA, BH.125 and DH.125 Series 400A, HS.125 Series 403B, F400B, and F403B, HS.125 Series 600A, BH.125 Series 600A, HS.125 Series F600B, 700A, and 700B, BAe.125 Series 800 and 1000, and Hawker 800 and 850XP series.

Unsafe Condition

(d) This AD results from a report of cracks found during a fluorescent penetrant inspection (FPI) of the disc bore. We are issuing this AD to prevent an uncontained failure of a second and third stage LPCR disc due to cracks in the bore, which could result in damage to the airplane.

Compliance

(e) You are responsible for having the actions required by this AD performed within the compliance times specified unless the actions have already been done.

Removing LPCR Discs from Service

(f) For engines with a second and third stage LPCR disc that has a serial number (SN) listed in Table 5 of Honeywell International Inc. Alert Service Bulletins (ASBs) TFE731–72–A3748, dated August 21, 2008, or TFE731–72–A3749, dated August 21, 2008, remove the second and third stage LPCR disc from service within 100 cycles-in-service (CIS) after the effective date of this AD.

(g) For engines with a second and third stage LPCR disc that has an SN listed in Table 6 of Honeywell International Inc. ASBs TFE731–72–A3748, dated August 21, 2008, or TFE731–72–A3749, dated August 21, 2008, do the earlier of the following:

(1) Remove the second and third stage LPCR disc from service within 2,000 CIS after the effective date of this AD, or

(2) Remove the second and third stage LPCR disc from service the next time the intermediate case is removed from the LPC case.

Installation Prohibition

(h) After the effective date of this AD, don't install any second and third stage LPCR disc removed as required in paragraphs (f) or (g) of this AD.

Alternative Methods of Compliance

(i) The Manager, Los Angeles Aircraft Certification Office, has the authority to approve alternative methods of compliance for this AD if requested using the procedures found in 14 CFR 39.19.

Related Information

(j) Contact Joseph Costa, Aerospace Engineer, Los Angeles Aircraft Certification Office, FAA, Transport Airplane Directorate, 3960 Paramount Blvd., Lakewood, CA 90712–4137; e-mail: *joseph.costa@faa.gov*; telephone: (562) 627–5246; fax: (562) 627–5210, for more information about this AD.

(k) Honeywell International Inc. ASBs TFE731–72–A3748, dated August 21, 2008, and TFE731–72–A3749, dated August 21, 2008, pertain to the subject of this AD. Contact Honeywell Engines and Systems Technical Publications and Distribution, M/S 2101–201, P.O. Box 52170, Phoenix, AZ 85072–2170, telephone: Global Customer Care toll free (800) 601–3099; International callers (602) 365–3099, for a copy of this service information.

Issued in Burlington, Massachusetts, on April 6, 2009.

Peter A. White,

Assistant Manager, Engine and Propeller Directorate, Aircraft Certification Service.

[FR Doc. E9–8309 Filed 4–10–09; 8:45 am]

BILLING CODE 4910–13–P

DEPARTMENT OF TRANSPORTATION

Federal Aviation Administration

14 CFR Part 39

[Docket No. FAA–2009–0330; Directorate Identifier 2008–NE–43–AD]

RIN 2120–AA64

Airworthiness Directives; Turbomeca S.A. ARRIUS 2F Turboshaft Engines

AGENCY: Federal Aviation Administration (FAA), DOT.

ACTION: Notice of proposed rulemaking (NPRM).

SUMMARY: We propose to adopt a new airworthiness directive (AD) for the products listed above. This proposed AD results from mandatory continuing airworthiness information (MCAI) issued by an aviation authority of another country to identify and correct an unsafe condition on an aviation product. The MCAI describes the unsafe condition as: Rubs between the pipe and the bulkhead may lead to premature wearing and finally rupture of the P3 air pipe. The loss of P3 air pressure would then force the fuel control system to idle which could have a detrimental effect in critical phases of flight. We are proposing this AD to prevent an uncommanded power loss, which could result in an emergency autorotation landing or accident.

DATES: We must receive comments on this proposed AD by May 13, 2009.

ADDRESSES: You may send comments by any of the following methods:

- *Federal eRulemaking Portal:* Go to *http://www.regulations.gov* and follow the instructions for sending your comments electronically.
- *Mail:* Docket Management Facility, U.S. Department of Transportation, 1200 New Jersey Avenue, SE., West Building Ground Floor, Room W12–140, Washington, DC 20590–0001.
- *Hand Delivery:* Deliver to Mail address above between 9 a.m. and 5 p.m., Monday through Friday, except Federal holidays.
- *Fax:* (202) 493–2251.

Examining the AD Docket

You may examine the AD docket on the Internet at *http://www.regulations.gov*; or in person at the Docket Operations office between 9 a.m. and 5 p.m., Monday through Friday, except Federal holidays. The AD docket contains this proposed AD, the regulatory evaluation, any comments received, and other information. The street address for the Docket Operations office (telephone (800) 647–5527) is the same as the Mail address provided in the **ADDRESSES** section. Comments will be available in the AD docket shortly after receipt.

FOR FURTHER INFORMATION CONTACT: James Lawrence, Aerospace Engineer, Engine Certification Office, FAA, Engine and Propeller Directorate, 12 New England Executive Park, Burlington, MA 01803; e-mail: *james.lawrence@faa.gov*; telephone (781) 238–7176; fax (781) 238–7199.

SUPPLEMENTARY INFORMATION:

Comments Invited

We invite you to send any written relevant data, views, or arguments about this proposed AD. Send your comments to an address listed under the **ADDRESSES** section. Include ''Docket No. FAA–2009–0330; Directorate Identifier 2008–NE–43–AD'' at the beginning of your comments. We specifically invite comments on the overall regulatory, economic, environmental, and energy aspects of this proposed AD. We will consider all comments received by the closing date and may amend this proposed AD based on those comments.

We will post all comments we receive, without change, to *http://www.regulations.gov*, including any personal information you provide. We will also post a report summarizing each substantive verbal contact with FAA personnel concerning this proposed AD. Using the search function of the Web site, anyone can find and read the comments in any of our dockets, including, if provided, the name of the individual who sent the comment (or signed the comment on behalf of an association, business, labor union, etc.). You may review the DOT's complete Privacy Act Statement in the **Federal Register** published on April 11, 2000 (65 FR 19477–78).

Discussion

The European Aviation Safety Agency (EASA), which is the Technical Agent for the Member States of the European Community, has issued EASA Airworthiness Directive 2008–0134R1, dated February 17, 2009, (referred to after this as ''the MCAI''), to correct an unsafe condition for the specified products. The MCAI states:

On several ARRIUS 2F engines, the clearance between the P3 air pipe P/N 0319719180 and the rear right bulkhead P/N 0319998240 has been found to be too small.

Investigations have shown that both P3 air pipe and rear right bulkhead were compliant to the design. The Turbomeca Engineering Department concluded that the tolerance of assembly established during the design could result in some rubbing between parts.

Rubs between the pipe and the bulkhead may lead to premature wearing and finally rupture of the P3 air pipe. The loss of P3 air pressure would then force the fuel control system to idle which could have a detrimental effect in critical phases of flight.

For the reason stated above, this Airworthiness Directive (AD) requires the inspection of the P3 air pipe (first section) and RH rear half-wall and, in case it is found damaged or non-compliant (idem), the replacement or readjustment of parts.

You may obtain further information by examining the MCAI in the AD docket.

Relevant Service Information

Turbomeca S.A. has issued Mandatory Service Bulletin (MSB) No. 319 75 4810, dated May 14, 2008. The actions described in this service information are intended to correct the unsafe condition identified in the MCAI.

FAA's Determination and Requirements of This Proposed AD

This product has been approved by the aviation authority of France, and is approved for operation in the United States. Pursuant to our bilateral agreement with France, they have notified us of the unsafe condition described in the MCAI and service information referenced above. We are proposing this AD because we evaluated all information provided by France and determined the unsafe condition exists and is likely to exist or develop on other products of the same type design.

Costs of Compliance

Based on the service information, we estimate that this proposed AD would affect about 94 engines installed on helicopters of U.S. registry. We also estimate that it would take about 1 work-hour per engine to comply with this proposed AD. The average labor rate is $80 per work-hour. Required parts would cost about $705 per engine. Based on these figures, we estimate the cost of the proposed AD on U.S. operators to be $73,790. Our cost estimate is exclusive of possible warranty coverage.

Authority for This Rulemaking

Title 49 of the United States Code specifies the FAA's authority to issue rules on aviation safety. Subtitle I, section 106, describes the authority of the FAA Administrator. ''Subtitle VII: Aviation Programs,'' describes in more detail the scope of the Agency's authority.

We are issuing this rulemaking under the authority described in ''Subtitle VII, Part A, Subpart III, Section 44701: General requirements.'' Under that section, Congress charges the FAA with promoting safe flight of civil aircraft in air commerce by prescribing regulations for practices, methods, and procedures the Administrator finds necessary for safety in air commerce. This regulation is within the scope of that authority because it addresses an unsafe condition that is likely to exist or develop on products identified in this rulemaking action.

Regulatory Findings

We determined that this proposed AD would not have federalism implications under Executive Order 13132. This proposed AD would not have a substantial direct effect on the States, on the relationship between the national Government and the States, or on the distribution of power and responsibilities among the various levels of government.

For the reasons discussed above, I certify this proposed regulation:

1. Is not a ''significant regulatory action'' under Executive Order 12866;

2. Is not a ''significant rule'' under the DOT Regulatory Policies and Procedures (44 FR 11034, February 26, 1979); and

3. Will not have a significant economic impact, positive or negative, on a substantial number of small entities under the criteria of the Regulatory Flexibility Act.

We prepared a regulatory evaluation of the estimated costs to comply with this proposed AD and placed it in the AD docket.

List of Subjects in 14 CFR Part 39

Air transportation, Aircraft, Aviation safety, Incorporation by reference, Safety.

The Proposed Amendment

Accordingly, under the authority delegated to me by the Administrator, the FAA proposes to amend 14 CFR part 39 as follows:

PART 39—AIRWORTHINESS DIRECTIVES

1. The authority citation for part 39 continues to read as follows:

Authority: 49 U.S.C. 106(g), 40113, 44701.

§ 39.13 [Amended]

2. The FAA amends § 39.13 by adding the following new AD:

Turbomeca S.A.: Docket No. FAA–2009–0330; Directorate Identifier 2008–NE–43–AD.

Comments Due Date

(a) We must receive comments by May 13, 2009.

Affected Airworthiness Directives (ADs)

(b) None.

Applicability

(c) This AD applies to Turbomeca S.A. ARRIUS 2F turboshaft engines with P3 air pipe, part number 0319719180, installed. These engines are installed on, but not limited to, Eurocopter EC120B helicopters.

Reason

(d) Rubs between the pipe and the bulkhead may lead to premature wearing and finally rupture of the P3 air pipe. The loss of P3 air pressure would then force the fuel control system to idle which could have a detrimental effect in critical phases of flight. We are issuing this AD to prevent an uncommanded power loss, which could result in an emergency autorotation landing or accident.

Actions and Compliance

(e) Unless already done, do the following actions within 100 operating hours after the effective date of this AD. Use paragraphs 2.B.(1) through 2.C.(2) of Turbomeca Mandatory Service Bulletin No. 319 75 4810, dated May 14, 2008.

(1) Visually inspect P3 air pipe (first section) and RH rear half-wall.

(2) Inspect play between P3 air pipe (first section) and RH rear half-wall.

(3) Replace P3 air pipe (first section) if any damage is found.

(4) Readjust the first section of the P3 air pipe if the inspected clearance is found to be not compliant.

(5) If the play after readjusting the first section of the P3 air pipe is still less than 0.5 mm, repeat paragraphs (e)(1) through (e)(4) of this AD within intervals of 100 hours time-since-last inspection.

(6) Replace RH rear half-wall if any damage is found.

FAA AD Differences

(f) None.

Other FAA AD Provisions

(g) Alternative Methods of Compliance (AMOCs): The Manager, Engine Certification Office, FAA, has the authority to approve AMOCs for this AD, if requested using the procedures found in 14 CFR 39.19.

Related Information

(h) Refer to MCAI EASA Airworthiness Directive 2008–0134R1, dated February 17, 2009, and Turbomeca S.A. Mandatory Service Bulletin No. 319 75 4810, dated May 14, 2008, for related information. Contact Turbomeca, 40220 Tarnos, France; telephone 33 (0)5 59 74 40 00; telex 570 042; fax 33 (0)5 59 74 45 15, for a copy of this service information.

(i) Contact James Lawrence, Aerospace Engineer, Engine Certification Office, FAA, Engine and Propeller Directorate, 12 New

England Executive Park, Burlington, MA 01803; e-mail: *james.lawrence@faa.gov*; telephone (781) 238–7176; fax (781) 238–7199, for more information about this AD.

Issued in Burlington, Massachusetts, on April 6, 2009.

Peter A. White,

Assistant Manager, Engine and Propeller Directorate, Aircraft Certification Service.

[FR Doc. E9–8310 Filed 4–10–09; 8:45 am]

BILLING CODE 4910–13–P

DEPARTMENT OF TRANSPORTATION

Federal Aviation Administration

14 CFR Part 39

[Docket No. FAA–2009–0247; Directorate Identifier 2009–NE–07–AD]

RIN 2120–AA64

Airworthiness Directives; Hamilton Sundstrand Power Systems T–62T–46C12 Auxiliary Power Units

AGENCY: Federal Aviation Administration (FAA), DOT.

ACTION: Notice of proposed rulemaking (NPRM).

SUMMARY: The FAA proposes to adopt a new airworthiness directive (AD) for Hamilton Sundstrand Power Systems T–62T–46C12 auxiliary power units (APUs). This proposed AD would require upgrading the software in the APU full-authority digital controller (FADEC), from software version 02.01.000 to version 03.00.000. This proposed AD results from two reports of APU compartment explosions due to over-fueling of the APU at low rpm during the start sequence. We are proposing this AD to prevent over-fueling of the APU during the start sequence, which could lead to fuel explosions, injury, and damage to the APU and the airplane.

DATES: We must receive any comments on this proposed AD by June 12, 2009.

ADDRESSES: Use one of the following addresses to comment on this proposed AD.

- *Federal eRulemaking Portal:* Go to *http://www.regulations.gov* and follow the instructions for sending your comments electronically.
- *Mail:* Docket Management Facility, U.S. Department of Transportation, 1200 New Jersey Avenue, SE., West Building Ground Floor, Room W12–140, Washington, DC 20590–0001.
- *Hand Delivery:* Deliver to Mail address above between 9 a.m. and 5 p.m., Monday through Friday, except Federal holidays.
- *Fax:* (202) 493–2251.

FOR FURTHER INFORMATION CONTACT: Roger Pesuit, Aerospace Engineer, Los Angeles Aircraft Certification Office, FAA, Transport Airplane Directorate, 3960 Paramount Blvd., Lakewood, CA 90712; e-mail: *roger.pesuit@faa.gov*; telephone (562) 627–5251, fax (562) 627–5210.

Contact Hamilton Sundstrand Technical Publications, One Hamilton Road, Mail Stop: 1A–3–Z63, Windsor Locks, CT 06096–1010; telephone (860) 654–3575, for a copy of the service information identified in this proposed AD.

SUPPLEMENTARY INFORMATION:

Comments Invited

We invite you to send us any written relevant data, views, or arguments regarding this proposal. Send your comments to an address listed under **ADDRESSES**. Include ''Docket No. FAA–2009–0247; Directorate Identifier 2009–NE–07–AD'' in the subject line of your comments. We specifically invite comments on the overall regulatory, economic, environmental, and energy aspects of the proposed AD. We will consider all comments received by the closing date and may amend the proposed AD in light of those comments.

We will post all comments we receive, without change, to *http://www.regulations.gov*, including any personal information you provide. We will also post a report summarizing each substantive verbal contact with FAA personnel concerning this proposed AD. Using the search function of the Web site, anyone can find and read the comments in any of our dockets, including, if provided, the name of the individual who sent the comment (or signed the comment on behalf of an association, business, labor union, etc.). You may review the DOT's complete Privacy Act Statement in the **Federal Register** published on April 11, 2000 (65 FR 19477–78).

Examining the AD Docket

You may examine the AD docket on the Internet at *http://www.regulations.gov*; or in person at the Docket Operations office between 9 a.m. and 5 p.m., Monday through Friday, except Federal holidays. The AD docket contains this proposed AD, the regulatory evaluation, any comments received, and other information. The street address for the Docket Operations office (telephone (800) 647–5527) is the same as the Mail address provided in the **ADDRESSES** section. Comments will be available in the AD docket shortly after receipt.

Discussion

We received two reports of APU compartment explosions of Hamilton Sundstrand Power Systems T–62T–46C12 APUs, related to attempted start of the APU. In both events, the APU compartment was damaged, and the compartment doors were blown off the airplane. The APUs are ground operational only, and the airplanes were parked at the time of explosion. Investigation has revealed that the APU could receive an excessively rich fuel mixture at low rpm during the start sequence, due to the APU FADEC version 02.01.000 software, that can allow over-fueling of the APU during starting. This condition, if not corrected, could result in over-fueling of the APU during the start sequence, which could lead to fuel explosion, injury, and damage to the APU and the airplane.

Relevant Service Information

We have reviewed and approved the technical contents of Hamilton Sundstrand Power Systems Service Bulletin No. 4503067–49–12, Revision 1, dated December 23, 2008, that describes procedures for upgrading the APU FADEC software to version 03.00.000. This upgrade eliminates the potential for over-fueling the APU during the start sequence.

FAA's Determination and Requirements of the Proposed AD

We have evaluated all pertinent information and identified an unsafe condition that is likely to exist or develop on other products of this same type design. We are proposing this AD, which would require upgrading the APU FADEC software to version 03.00.000. The proposed AD would require you to use the service information described previously to perform these actions.

Costs of Compliance

We estimate that this proposed AD would affect 59 Hamilton Sundstrand Power Systems T–62T–46C12 APUs installed on airplanes of U.S. registry. We also estimate that it would take about three work-hours per APU to perform the proposed actions, and that the average labor rate is $80 per work-hour. There is no required part cost. Based on these figures, we estimate the total cost of the proposed AD to U.S. operators to be $14,160.

Authority for This Rulemaking

Title 49 of the United States Code specifies the FAA's authority to issue rules on aviation safety. Subtitle I, Section 106, describes the authority of the FAA Administrator. Subtitle VII,

Aviation Programs, describes in more detail the scope of the Agency's authority.

We are issuing this rulemaking under the authority described in Subtitle VII, Part A, Subpart III, Section 44701, ''General requirements.'' Under that section, Congress charges the FAA with promoting safe flight of civil aircraft in air commerce by prescribing regulations for practices, methods, and procedures the Administrator finds necessary for safety in air commerce. This regulation is within the scope of that authority because it addresses an unsafe condition that is likely to exist or develop on products identified in this rulemaking action.

Regulatory Findings

We have determined that this proposed AD would not have federalism implications under Executive Order 13132. This proposed AD would not have a substantial direct effect on the States, on the relationship between the national Government and the States, or on the distribution of power and responsibilities among the various levels of government.

For the reasons discussed above, I certify that the proposed AD:

1. Is not a ''significant regulatory action'' under Executive Order 12866;
2. Is not a ''significant rule'' under the DOT Regulatory Policies and Procedures (44 FR 11034, February 26, 1979); and
3. Would not have a significant economic impact, positive or negative, on a substantial number of small entities under the criteria of the Regulatory Flexibility Act.

We prepared a regulatory evaluation of the estimated costs to comply with this proposed AD. You may get a copy of this summary at the address listed under **ADDRESSES**.

List of Subjects in 14 CFR Part 39

Air transportation, Aircraft, Aviation safety, Incorporation by reference, Safety.

The Proposed Amendment

Under the authority delegated to me by the Administrator, the Federal Aviation Administration proposes to amend 14 CFR part 39 as follows:

PART 39—AIRWORTHINESS DIRECTIVES

1. The authority citation for part 39 continues to read as follows:

Authority: 49 U.S.C. 106(g), 40113, 44701.

§ 39.13 [Amended]

2. The FAA amends § 39.13 by adding the following new airworthiness directive:

Hamilton Sundstrand Power Systems: Docket No. FAA–2009–0247; Directorate Identifier 2009–NE–07–AD.

Comments Due Date

(a) The Federal Aviation Administration (FAA) must receive comments on this airworthiness directive (AD) action by June 12, 2009.

Affected ADs

(b) None.

Applicability

(c) This AD applies to Hamilton Sundstrand Power Systems T–62T–46C12 auxiliary power units (APUs). These APUs are installed on, but not limited to, Bombardier Inc. DHC–8–400 series airplanes.

Unsafe Condition

(d) This AD results from two reports of APU compartment explosions due to over-fueling of the APU at low rpm during the start sequence. We are issuing this AD to prevent over-fueling of the APU during the start sequence, which could lead to fuel explosion, injury, and damage to the APU and the airplane.

Compliance

(e) You are responsible for having the actions required by this AD performed within the compliance times specified unless the actions have already been done.

Software Upgrade of the APU Full-Authority Digital Electronic Controller (FADEC)

(f) At the next FADEC removal, but no later than 18 months after the effective date of this AD, upgrade the software in the APU FADEC from software version 02.01.000 to version 03.00.000, and change the FADEC part number (P/N) from 4503069E to 4503069F.

(g) Use paragraphs 3.A through 3.F.(2) of the Accomplishment Instructions of Hamilton Sundstrand Power Systems Service Bulletin No. 4503067–49–12, Revision 1, dated December 23, 2008, to do the software upgrade and the FADEC P/N change.

Alternative Methods of Compliance

(h) The Manager, Los Angeles Aircraft Certification Office, has the authority to approve alternative methods of compliance for this AD if requested using the procedures found in 14 CFR 39.19.

Related Information

(i) Contact Roger Pesuit, Aerospace Engineer, Los Angeles Aircraft Certification Office, FAA, Transport Airplane Directorate, 3960 Paramount Blvd., Lakewood, CA 90712; e-mail: *roger.pesuit@faa.gov*; telephone (562) 627–5251, fax (562) 627–5210, for more information about this AD.

(j) Contact Hamilton Sundstrand Technical Publications, One Hamilton Road, Mail Stop: 1A–3–Z63, Windsor Locks, CT 06096–1010; telephone (860) 654–3575, for a copy of the service information referenced in this AD.

Issued in Burlington, Massachusetts, on April 7, 2009.

Peter A. White,

Assistant Manager, Engine and Propeller Directorate, Aircraft Certification Service.

[FR Doc. E9–8311 Filed 4–10–09; 8:45 am]

BILLING CODE 4910–13–P

DEPARTMENT OF TRANSPORTATION

Federal Aviation Administration

14 CFR Part 71

[Docket No. FAA–2009–0042; Airspace Docket No. 09–ANM–1]

Proposed Modification of Class E Airspace; Montrose, CO

AGENCY: Federal Aviation Administration (FAA), DOT.

ACTION: Notice of proposed rulemaking.

SUMMARY: This action proposes to modify Class E airspace at Montrose Regional Airport, Montrose, CO. Additional controlled airspace is necessary to accommodate aircraft using the Instrument Landing System (ILS) Localizer/Distance Measuring Equipment (LOC/DME) Standard Instrument Approach Procedure (SIAP) at Montrose Regional Airport, Montrose, CO. The geographic coordinates are being updated to coincide with the FAA's National Aeronautical Charting Office. The FAA is proposing this action to enhance the safety and management of aircraft operations at Montrose Regional Airport, Montrose, CO.

DATES: Comments must be received on or before May 28, 2009.

ADDRESSES: Send comments on this proposal to the U.S. Department of Transportation, Docket Operations, M–30, West Building Ground Floor, Room W12–140, 1200 New Jersey Avenue, SE., Washington, DC 20590. Telephone (202) 366–9826. You must identify FAA Docket No. FAA–2009–0042; Airspace Docket No. 09–ANM–1, at the beginning of your comments. You may also submit comments through the Internet at *http://www.regulations.gov*.

FOR FURTHER INFORMATION CONTACT: Eldon Taylor, Federal Aviation Administration, Operations Support Group, Western Service Center, 1601 Lind Avenue, SW., Renton, WA 98057; telephone (425) 203–4537.

SUPPLEMENTARY INFORMATION:

Comments Invited

Interested parties are invited to participate in this proposed rulemaking by submitting such written data, views, or arguments, as they may desire.

Comments that provide the factual basis supporting the views and suggestions presented are particularly helpful in developing reasoned regulatory decisions on the proposal. Comments are specifically invited on the overall regulatory, aeronautical, economic, environmental, and energy-related aspects of the proposal.

Communications should identify both docket numbers (FAA Docket No. FAA 2009–0042 and Airspace Docket No. 09–ANM–1) and be submitted in triplicate to the Docket Management System (see **ADDRESSES** section for address and phone number). You may also submit comments through the Internet at *http://www.regulations.gov*.

Commenters wishing the FAA to acknowledge receipt of their comments on this action must submit with those comments a self-addressed stamped postcard on which the following statement is made: ''Comments to FAA Docket No. FAA–2009–0042 and Airspace Docket No. 09–ANM–1''. The postcard will be date/time stamped and returned to the commenter.

All communications received on or before the specified closing date for comments will be considered before taking action on the proposed rule. The proposal contained in this action may be changed in light of comments received. All comments submitted will be available for examination in the public docket both before and after the closing date for comments. A report summarizing each substantive public contact with FAA personnel concerned with this rulemaking will be filed in the docket.

Availability of NPRMs

An electronic copy of this document may be downloaded through the Internet at *http://www.regulations.gov*. Recently published rulemaking documents can also be accessed through the FAA's Web page at *http://www.faa.gov/airports_airtraffic/air_traffic/publications/airspace_amendments/*.

You may review the public docket containing the proposal, any comments received, and any final disposition in person in the Dockets Office (see the **ADDRESSES** section for the address and phone number) between 9 a.m. and 5 p.m., Monday through Friday, except Federal holidays. An informal docket may also be examined during normal business hours at the Northwest Mountain Regional Office of the Federal Aviation Administration, Air Traffic Organization, Western Service Area, Operations Support Group, 1601 Lind Avenue, SW., Renton, WA 98057.

Persons interested in being placed on a mailing list for future NPRMs should contact the FAA's Office of Rulemaking, (202) 267–9677, for a copy of Advisory Circular No. 11–2A, Notice of Proposed Rulemaking Distribution System, which describes the application procedure.

The Proposal

The FAA is proposing an amendment to Title 14 Code of Federal Regulations (14 CFR) part 71 by modifying Class E airspace at Montrose Regional Airport, Montrose, CO. Additional controlled airspace is necessary to accommodate aircraft using the new ILS LOC/DME SIAP at Montrose Regional Airport, Montrose, CO. The geographic coordinates are being updated to coincide with the FAA's National Aeronautical Charting Office. This action would enhance the safety and management of aircraft operations at Montrose Regional Airport, Montrose, CO.

Class E airspace designations are published in paragraph 6005 of FAA Order 7400.9S, signed October 3, 2008, and effective October 31, 2008, which is incorporated by reference in 14 CFR 71.1. The Class E airspace designation listed in this document will be published subsequently in this Order.

The FAA has determined that this proposed regulation only involves an established body of technical regulations for which frequent and routine amendments are necessary to keep them operationally current. Therefore, this proposed regulation: (1) Is not a ''significant regulatory action'' under Executive Order 12866; (2) is not a ''significant rule'' under DOT Regulatory Policies and Procedures (44 FR 11034; February 26, 1979); and (3) does not warrant preparation of a regulatory evaluation as the anticipated impact is so minimal. Since this is a routine matter that will only affect air traffic procedures and air navigation, it is certified that this proposed rule, when promulgated, would not have a significant economic impact on a substantial number of small entities under the criteria of the Regulatory Flexibility Act.

The FAA's authority to issue rules regarding aviation safety is found in Title 49 of the U.S. Code, Subtitle 1, Section 106, describes the authority for the FAA Administrator. Subtitle VII, Aviation Programs, describes in more detail the scope of the agency's authority. This rulemaking is promulgated under the authority described in Subtitle VII, Part A, Subpart I, Section 40103. Under that section, the FAA is charged with prescribing regulations to assign the use of the airspace necessary to ensure the safety of aircraft and the efficient use of airspace. This regulation is within the scope of that authority as it modifies controlled airspace at Montrose Regional Airport, Montrose, CO.

List of Subjects in 14 CFR Part 71

Airspace, Incorporation by reference, Navigation (air).

The Proposed Amendment

Accordingly, pursuant to the authority delegated to me, the Federal Aviation Administration proposes to amend 14 CFR part 71 as follows:

PART 71—DESIGNATION OF CLASS A, B, C, D, AND E AIRSPACE AREAS; AIR TRAFFIC SERVICE ROUTES; AND REPORTING POINTS

1. The authority citation for 14 CFR part 71 continues to read as follows:

Authority: 49 U.S.C. 106(g), 40103, 40113, 40120; E.O. 10854, 24 FR 9565, 3 CFR, 1959–1963 Comp., p. 389.

§ 71.1 [Amended]

2. The incorporation by reference in 14 CFR 71.1 of the FAA Order 7400.9S, Airspace Designations and Reporting Points, signed October 3, 2008, and effective October 31, 2008 is amended as follows:

Paragraph 6005 Class E airspace areas extending upward from 700 feet or more above the surface of the earth.

* * * * *

ANM CO, E5 Montrose, CO [Modify]

Montrose Regional Airport, CO
(Lat. 38°30′35″ N., long. 107°53′38″ W.)
Montrose VOR/DME
(Lat. 38°30′23″ N., long. 107°53′58″ W.)

That airspace extending upward from 700 feet above the surface within a 7.2-mile radius of the Montrose Regional Airport and within 4.3 miles northeast and 8.3 miles southwest of the Montrose VOR/DME 313° and 133° radials extending from 7.2 miles southeast to 21.4 miles northwest of the VOR/DME, and within 4 miles each side of the Montrose VOR/DME 360° radial extending to 13.6 miles north of the VOR/DME; and that airspace extending upward from 1,200 feet above the surface within an area bounded by a point beginning at lat. 38°40′00″ N., long. 108°46′00″ W.; to lat. 38°25′00″ N., long. 108°42′30″ W.; to lat. 37°58′00″ N., long. 108°10′00″ W.; to lat. 38°09′00″ N., long. 107°35′00″ W.; to lat. 38°43′00″ N., long. 107°39′30″ W.; to lat. 38°51′30″ N., long. 107°41′00″ W.; to lat. 39°01′00″ N., long. 107°47′00″ W.; to lat. 39°01′00″ N., long. 108°09′00″ W.; thence to the point of beginning.

* * * * *

Issued in Seattle, Washington, on April 2, 2009.

H. Steve Karnes,

Acting Manager, Operations Support Group, Western Service Center.

[FR Doc. E9–8363 Filed 4–10–09; 8:45 am]

BILLING CODE 4910–13–P

DEPARTMENT OF HOMELAND SECURITY

Coast Guard

33 CFR Part 117

[Docket No. USCG–2008–0478]

RIN 1625–AA09

Drawbridge Operation Regulation; LaLoutre Bayou, Yscloskey, LA

AGENCY: Coast Guard, DHS.

ACTION: Notice of proposed rulemaking; withdrawal.

SUMMARY: The Coast Guard is withdrawing its notice of proposed rulemaking concerning the operation of the State Route 46 (LA 46) Bridge across LaLoutre Bayou, mile 22.9, at Yscloskey, St. Bernard Parish, Louisiana.

DATES: The notice of proposed rulemaking is withdrawn on April 13, 2009.

ADDRESSES: The docket for this withdrawn rulemaking is available for inspection and copying at the Docket Management Facility (M–30), U.S. Department of Transportation, West Building Ground Floor, Room W12–140, 1200 New Jersey Avenue, SE., Washington, DC 20590, between 9 a.m. and 5 p.m., Monday through Friday, except Federal holidays. You may also find this docket on the Internet at *http://www.regulations.gov*.

FOR FURTHER INFORMATION CONTACT: If you have questions on this proposed rule, call Kay Wade, Bridge Administration Branch, telephone 504–671–2128. If you have questions on viewing or submitting material to the docket, call Renee V. Wright, Program Manager, Docket Operations, telephone 202–366–9826.

SUPPLEMENTARY INFORMATION:

Background

On June 25, 2008, we published a notice of proposed rulemaking entitled ''Drawbridge Operation Regulation; LaLoutre Bayou, Yscloskey, LA'' in the **Federal Register** (73 FR 35985). The rulemaking concerned the modification of the operation schedule of the draw to allow for the more efficient use of personnel by requiring a two-hour notice for nighttime openings.

Withdrawal

At the request of the Louisiana Department of Transportation and Development (LDOTD), the owner of the bridge, the notice of proposed rulemaking is being withdrawn as it has been determined that the present schedule of operation of the bridge provides for the needs of the public.

Authority

This action is taken under the authority of 33 U.S.C. 499; 33 CFR 1.05–1; Department of Homeland Security Delegation No. 0170.1.

Dated: March 26, 2009.

J.R. Whitehead,

Rear Admiral, U.S. Coast Guard, Commander, Eighth Coast Guard District.

[FR Doc. E9–8271 Filed 4–10–09; 8:45 am]

BILLING CODE 4910–15–P

DEPARTMENT OF HOMELAND SECURITY

Coast Guard

33 CFR Part 165

[Docket No. USCG–2008–1017]

RIN 1625–AA11

Regulated Navigation Areas; Bars Along the Coasts of Oregon and Washington

AGENCY: Coast Guard, DHS.

ACTION: Notice of public meeting; reopening of comment period.

SUMMARY: The Coast Guard announces two public meetings to receive comments on the notice of proposed rulemaking entitled ''Regulated Navigation Areas; Bars Along the Coasts of Oregon and Washington'' that was published in the **Federal Register** on February 12, 2009 (74 FR 7022). The Coast Guard is also reopening the period for public comment on that notice of proposed rulemaking.

As stated in the notice of proposed rulemaking, the Coast Guard proposes to establish Regulated Navigation Areas (RNA) covering specific bars along the coasts of Oregon (OR) and Washington (WA) that will include procedures for restricting and/or closing those bars as well as additional safety requirements for recreational and small commercial vessels operating in the RNAs. The RNAs are necessary to help ensure the safety of the persons and vessels operating in those hazardous bar areas. The RNAs will do so by establishing clear procedures for restricting and/or closing the bars and mandating additional safety requirements for recreational and small commercial vessels operating in the RNAs when certain conditions exist.

DATES: The comment period for the proposed rule published at 74 FR 7022, Feb. 12, 2009 is reopened and will close on April 19, 2009. All comments and related material must be received by the Coast Guard on or before April 19, 2009. The public meetings for the proposed rule will be held in Astoria, OR, on Tuesday, April 14, 2009, from 6 p.m. to 9 p.m., and in Newport, OR, on Wednesday, April 15, 2009, from 6 p.m. to 9 p.m., in order to provide an opportunity for oral comments. Please note that the meetings may close early if all business is finished. Written comments and related material may also be submitted to Coast Guard personnel specified at that meeting.

ADDRESSES: The public meeting in Astoria, OR, will be held at ''The Loft'' at the Red Building, 20 Basin Street, Astoria, OR 97103, telephone 503–325–2223. The public meeting in Newport, OR, will be held at The Embarcadero Resort Hotel & Marina, 1000 SE Bay Blvd., Newport, OR 97365, telephone 541–265–8521 or 1–800–547–4779.

You may submit written comments identified by docket number USCG–2008–1017 before or after the meeting using any one of the following methods:

(1) Federal eRulemaking Portal: *http://www.regulations.gov*.

(2) Fax: 202–493–2251.

(3) Mail: Docket Management Facility (M–30), U.S. Department of Transportation, West Building Ground Floor, Room W12–140, 1200 New Jersey Avenue, SE., Washington, DC 20590–0001.

(4) Hand delivery: Same as mail address above, between 9 a.m. and 5 p.m., Monday through Friday, except Federal holidays. The telephone number is 202–366–9329.

To avoid duplication, please use only one of these four methods. Our online docket for this rulemaking is available on the Internet at *http://www.regulations.gov* under docket number USCG–2008–1017.

FOR FURTHER INFORMATION CONTACT: If you have questions concerning the meeting or the proposed rule, please call or e-mail LCDR Emily Saddler, Thirteenth Coast Guard District, Prevention Division, Inspections and Investigations Branch, telephone 206–220–7210, e-mail *Emily.C.Saddler@uscg.mil*. If you have questions on viewing or submitting material to the docket, call Ms. Renee V. Wright, Program Manager, Docket Operations, telephone 202–366–9826.

SUPPLEMENTARY INFORMATION:

Background and Purpose

We published a notice of proposed rulemaking (NPRM) in the **Federal Register** on February 12, 2009 (74 FR 7022), entitled ''Regulated Navigation Areas; Bars Along the Coasts of Oregon and Washington.'' In it we stated that we did not plan to hold a public meeting, but that we welcomed requests explaining why one would be beneficial (74 FR 7023). We received several such requests and have concluded that a public meeting would aid this rulemaking. Therefore, we are publishing this notice.

In the NPRM, we propose to establish Regulated Navigation Areas (RNA) covering specific bars along the coasts of Oregon and Washington that will include procedures for restricting and/or closing those bars as well as additional safety requirements for recreational and small commercial vessels operating in the RNAs. The RNAs are necessary to help ensure the safety of the persons and vessels operating in those hazardous bar areas. The RNAs will do so by establishing clear procedures for restricting and/or closing the bars and mandating additional safety requirements for recreational and small commercial vessels operating in the RNAs when certain conditions exist.

You may view the NPRM in our online docket, in addition to supporting documents prepared by the Coast Guard, including an ''Environmental Analysis Checklist'' and RNA Fact Sheets for recreational, passenger, and commercial fishing vessels, and comments submitted thus far by going to *http://www.regulations.gov*. Once there, select the Advanced Docket Search option on the right side of the screen, insert USCG–2008–1017 in the Docket ID box, press Enter, and then click on the item in the Docket ID column. You may also visit the Docket Management Facility in Room W12–140 on the ground floor of the Department of Transportation West Building, 1200 New Jersey Avenue, SE., Washington, DC 20590, between 9 a.m. and 5 p.m., Monday through Friday, except Federal holidays. We have an agreement with the Department of Transportation to use the Docket Management Facility.

We encourage you to participate in this rulemaking by submitting comments either orally at the meetings or in writing. If you bring written comments to the meetings, you may submit them to Coast Guard personnel specified at the meetings to receive written comments. These comments will be submitted to our online public docket. All comments received will be posted without change to *http://www.regulations.gov* and will include any personal information you have provided.

Comments submitted after the meetings must reach the Coast Guard on or before April 19, 2009. If you submit a comment online via *http://www.regulations.gov*, it will be considered received by the Coast Guard when you successfully transmit the comment. If you fax, hand deliver, or mail your comment, it will be considered as having been received by the Coast Guard when it is received at the Docket Management Facility.

Anyone can search the electronic form of comments received into any of our dockets by the name of the individual submitting the comment (or signing the comment, if submitted on behalf of an association, business, labor union, *etc.*). You may review a Privacy Act notice regarding our public dockets in the January 17, 2008, issue of the **Federal Register** (73 FR 3316).

Information on Service for Individuals With Disabilities

For information on facilities or services for individuals with disabilities or to request special assistance at the public meeting, contact LCDR Emily Saddler at the telephone number or e-mail address indicated under the **FOR FURTHER INFORMATION CONTACT** section of this notice.

Public Meeting

The Coast Guard will hold a public meeting regarding its ''Regulated Navigation Areas; Bars Along the Coasts of Oregon and Washington'' proposed rule on Tuesday, April 14, 2009, from 6 p.m. to 9 p.m, at The Loft at the Red Building, 20 Basin Street, Astoria, OR 97103, telephone 503–325–2223, and on Wednesday, April 15, 2009, from 6 p.m. to 9 p.m., at The Embarcadero Resort Hotel & Marina, 1000 SE Bay Blvd., Newport, OR 97365, telephone 541–265–8521 or 1–800–547–4779.

We plan to have an official transcript of the meetings prepared and will make that transcript available through a link in our online docket.

Dated: March, 30, 2009.

J.P. Currier,

Rear Admiral, U.S. Coast Guard, Commander, Thirteenth Coast Guard District.

[FR Doc. E9–8266 Filed 4–7–09; 8:45 am]

BILLING CODE 4910–15–P

NATIONAL SCIENCE FOUNDATION

45 CFR Part 612

RIN 3145–AA52

Notice of Proposed Rulemaking and Opportunity for Comment

AGENCY: National Science Foundation.

ACTION: Notice of proposed rulemaking and opportunity for comment.

SUMMARY: This document sets forth proposed revisions of the Foundation's regulations under the Freedom of Information Act (FOIA). The new FOIA provisions implement the Openness Promotes Effectiveness in our National Government Act of 2007, or the OPEN Government Act of 2007, Public Law 110–175.

DATES: Submit comments on or before May 13, 2009.

ADDRESSES: Address all comments concerning this proposed rule to the Office of the General Counsel, National Science Foundation, 4201 Wilson Boulevard, Suite 1265, Arlington, VA 22230. You may also send comments by facsimile transmission to (703) 292–9041, or send them electronically through the Federal Government's one-stop rulemaking Web site at *http://www.regulations.gov*.

FOR FURTHER INFORMATION CONTACT: Leslie A. Jensen, Legal Analyst, Office of the General Counsel, National Science Foundation, telephone 703–292–8060 and e-mail *ljensen@nsf.gov*.

SUPPLEMENTARY INFORMATION:

Availability of Records and Information (45 CFR part 612) (FOIA Regulations)

This revision of part 612 implements the new provisions of the Openness Promotes Effectiveness in our National Government Act of 2007, or the OPEN Government Act of 2007, Public Law 110–175. No changes to the Act's nine exemptions were made. The amendments address a range of procedural issues impacting FOIA administration, including the codification of several provisions of Executive Order 13392, Improving Agency Disclosure of Information. Clarifications or minor procedural changes are found at § 612.3(a), (b), (f) and (g) (Requirements for making requests), § 612.4(a) (Responding to requests), § 612.5 (c)(1) and (2) (Timing of Response to Requests), § 612.6 (a), (b), (c)(1) (Processing requests) and § 612.10(c)(iii) (Fees).

For purposes of the Regulatory Flexibility Act (5 U.S.C. 601), the proposed rule will not have a significant

economic effect on a substantial number of small entities; the proposed rule addresses the procedures to be followed when submitting or responding to requests for information under the Freedom of Information Act. For purposes of the Unfunded Mandates Reform Act of 1995 (Pub. L. 104–4) the proposed rule would not significantly or uniquely affect small governments and would not result in increased expenditures by State, local, and tribal governments, or by the private sector, of $100 million or more. For purposes of Executive Order 12866, the proposed rule is not a significant regulatory action requiring review by the Office of Management and Budget. For the purposes of the Paperwork Reduction Act of 1995 (44 U.S.C. 35) it has been determined that this proposed rulemaking does not impose any reporting or recordkeeping requirement on the public.

List of Subjects in 45 CFR Part 612

Administrative practice and procedure: Freedom of information.

For the reasons stated in the preamble, the National Science Foundation proposes to amend 45 CFR chapter VI by revising part 612 as follows:

PART 612—AVAILABILITY OF RECORDS AND INFORMATION

Sec.
612.1 General provisions.
612.2 Public reading room.
612.3 Requirements for making requests.
612.4 Responding to requests.
612.5 Timing of responses to requests.
612.6 Processing requests.
612.7 Exemptions.
612.8 Business information.
612.9 Appeals.
612.10 Fees.
612.11 Other rights and services.

Authority: 5 U.S.C. 552, as amended.

§ 612.1 General provisions.

This part contains the rules that the National Science Foundation follows in processing requests for records under the Freedom of Information Act (FOIA), 5 U.S.C. 552. Information routinely made available to the public as part of a regular Foundation activity (for example, program announcements and solicitations, summary of awarded proposals, statistical reports on U.S. science, news releases) may be provided to the public without reliance on this part. As a matter of policy, the Foundation also makes discretionary disclosures of records or information otherwise exempt under the FOIA whenever disclosure would not foreseeably harm an interest protected by a FOIA exemption. This policy, however, does not create any right enforceable in court. When individuals seek records about themselves under the Privacy Act of 1974, 5 U.S.C. 552a, NSF processes those requests under both NSF's Privacy regulations at part 613, and this part.

§ 612.2 Public reading room.

(a) The Foundation maintains a public reading room located in the NSF Library at 4201 Wilson Boulevard, Suite 225, Arlington, Virginia, open during regular working hours Monday through Friday. It contains the records that the FOIA requires to be made regularly available for public inspection and copying and has computers and printers available for public use in accessing records. Also available for public inspection and copying are current subject matter indexes of reading room records.

(b) Information about FOIA and Privacy at NSF and copies of frequently requested FOIA releases are available Online at *http://www.nsf.gov/pubinfo/foia.html*. Most NSF policy documents, staff instructions, manuals, and other publications that affect a member of the public, are available in electronic form through the ''Documents'' option on the tool bar on NSF's Home Page on the Internet at *http://www.nsf.gov*.

§ 612.3 Requirements for making requests.

(a) *Where to send a request*. The National Science Foundation has one Agency component. You may make a FOIA request for records of the National Science Foundation by writing directly to the FOIA Officer, Office of the General Counsel, National Science Foundation, 4201 Wilson Boulevard, Suite 1265, Arlington, VA 22230. For records maintained by the NSF Office of the Inspector General (OIG), a designated Agency component, you may write directly to the Office of Inspector General, National Science Foundation, 4201 Wilson Boulevard, Suite 1135, Arlington, VA 22230. The Agency FOIA officer and the OIG component will also forward requests as appropriate. Requests may also be sent by facsimile to the Agency FOIA Officer on (703) 292–9041 or by e-mail to *foia@nsf.gov*; or, as appropriate to the OIG component via Fax on (703) 292–9158.

(b) *Form of request*. A FOIA request need not be in any particular format, but it must be in writing, include the requester's name and mailing address, and be clearly identified both on the envelope and in the letter, or in a facsimile or electronic mail message as a Freedom of Information Act or ''FOIA'' request. It must describe the records sought with sufficient specificity to permit identification, and include agreement to pay applicable fees chargeable under the Foundation's fee schedule as described in § 612.10.

(c)(1) If you are making a request for records about yourself and the records are not contained in a Privacy Act system of records, your request will be processed only under the FOIA, since the Privacy Act does not apply. If the records about you are contained in a Privacy Act system of records, NSF will respond with information on how to make a Privacy Act request (*see* NSF Privacy Act regulations at 45 CFR 613.2).

(2) If you are making a request for personal information about another individual, either a written authorization signed by that individual in accordance with § 613.2(f) permitting disclosure of those records to you, or proof that that individual is deceased (for example, a copy of a death certificate or a published obituary) will help the agency process your request.

(d) *Description of records sought*. Your request must describe the records that you seek in enough detail to enable NSF personnel to locate them with a reasonable amount of effort. A record must have been created or obtained by NSF and under the control of NSF at the time of the request to be subject to the FOIA. NSF has no obligation under the FOIA to create, compile or obtain a record to satisfy a FOIA request. Whenever possible, your request should include specific descriptive information about each record sought, such as the date, title or name, author, recipient, and subject matter of the record. As a general rule, the more specific you are about the records or type of records that you want, the more likely the Foundation will be able to locate those records in response to your request, and the more likely fees will be reduced or eliminated. If NSF determines that your request does not reasonably describe records, you will be advised what additional information is needed to perfect your request or why your request is otherwise insufficient.

(e) *Agreement to pay fees*. Your request must state that you will promptly pay the total fees chargeable under this regulation or set a maximum amount you are willing to pay. NSF does not charge if fees total less than $25.00. If you seek a waiver of fees, please see § 612.10(k) for a discussion of the factors you must address. If you place an inadequate limit on the amount you will pay, or have failed to make payments for previous requests, NSF may require advance payment (see § 612.10(i)).

(f) *Receipt date*. A request that meets the requirements of this section will be considered received on the date it is received by the Office of the General Counsel or the Office of the Inspector General. In determining which records are responsive to a FOIA request, the Foundation will include only records in its possession as of the date the search begins.

(g) *Publications excluded*. For the purpose of public requests for records the term ''record'' does not include publications which are available to the public in the Federal Register, or by sale or free distribution. NSF publications are available in print. To request one or more print publications (*http://www.nsf.gov/publications/obtain.jsp*), you may:

(1) Fill out Web-based order form. *http://www.nsf.gov/publications/orderpub.jsp*.

(2) Contact NSF Publications at (703) 292–PUBS (7827).

(3) Send a letter with the publication number(s) clearly stated to: NSF Publications, National Science Foundation, 4201 Wilson Boulevard, Suite P–60, Arlington, VA 22230.

§ 612.4 Responding to requests.

(a) *Monitoring of requests*. The NSF Office of the General Counsel (OGC), or such other office as may be designated by the Director, will serve as the central office for administering these regulations. For records maintained by the Office of Inspector General, that Office will control incoming requests made directly or referred to it, dispatch response letters, and maintain administrative records. For all other records maintained by NSF, OGC (or such other office as may be designated by the Director) will control incoming requests, assign them to appropriate action offices, monitor compliance, consult with action offices on disclosure, approve necessary extensions, dispatch denial and other letters, and maintain administrative records.

(b) *Consultations and referrals*. When the Foundation receives a request for a record in its possession that originated with another agency or in which another agency has a substantial interest, it may decide that the other agency of the Federal Government is better able to determine whether the record should or should not be released under the FOIA.

(1) If the Foundation determines that it is the agency best able to process the record in response to the request, then it will do so, after consultation with the other interested agencies where appropriate.

(2) If it determines that it is not the agency best able to process the record, then it will refer the request regarding that record (or portion of the record) to the agency that originated or has a substantial interest in the record in question (but only if that agency is subject to the FOIA). Ordinarily, the agency that originated a record will be presumed to be best able to determine whether to disclose it.

(c) *Notice of referral*. Whenever the Foundation refers all or any part of the responsibility for responding to a request to another agency, it ordinarily will notify the requester of the referral and inform the requester of the name of each agency to which the request has been referred and of the part of the request that has been referred, unless such notification would disclose information otherwise exempt.

§ 612.5 Timing of responses to requests.

(a) *In general*. NSF ordinarily will initiate processing of requests according to their order of receipt.

(b) *Time for response*. The Foundation will make reasonable effort to act on a request within 20 days of when a request is received by the OGC or the OIG or perfected (excluding the date of receipt, weekends, and legal holidays). A request is perfected when you have reasonably described the records sought under § 612.3(d), agreed to pay fees chargeable under § 612.3(c), or otherwise met the fee requirements under § 612.10.

(c) *Unusual circumstances*. (1) Where the time limits for processing a request cannot be met because of ''unusual circumstances'' as defined in the FOIA, the FOIA Officer or the OIG component will notify the requester as soon as practicable in writing of the unusual circumstances and may extend the response period for up to ten working days.

(2) Where the extension is for more than ten working days, the FOIA Officer or the OIG component will provide the requester with an opportunity either to modify the request so that it may be processed within the time limits or to arrange an agreed upon alternative time period with the FOIA Officer or the OIG component for processing the request or a modified request.

(d) *Expedited processing*. (1) If you want to receive expedited processing you must submit a statement, certified to be true and correct to the best of your knowledge and belief, explaining in detail the basis for requesting expedited processing.

(2) Requests and appeals will be given expedited treatment whenever it is determined that a requester has demonstrated compelling need by presenting:

(i) Circumstances in which the lack of expedited treatment could reasonably be expected to pose an imminent threat to the life or physical safety of an individual; or

(ii) An urgency to inform the public about an actual or alleged Federal government activity, if made by a person primarily engaged in disseminating information.

For example, a requester who is not a full-time member of the news media must establish that he or she is a person whose main professional activity or occupation is information dissemination, though it need not be his or her sole occupation. Such requester also must establish a particular urgency to inform the public about the government activity involved in the request, beyond the public's right to know about government activity generally, and that the information sought has particular value that would be lost if not disseminated quickly.

(3) Within ten calendar days of receipt of a request for expedited processing, the FOIA Officer or OIG component will decide whether to grant it, and will notify the requester of the decision orally or in writing. If a request for expedited treatment is granted, the request will be processed as soon as practicable. If a request for expedited processing is denied, any appeal of that decision will be acted on expeditiously.

§ 612.6 Processing requests.

(a) *Acknowledgment of requests*. Each request is assigned a tracking number and the requester is advised of this FOIA number, the receipt date and the estimated date of action on the request.

(b) *Grants of requests*. Once the Foundation makes a determination to grant a request in whole or in part, it will notify the requester in writing. The Foundation will inform the requester in the notice of any applicable fee and will disclose records to the requester promptly on payment of applicable fees. Records disclosed in part will be marked or annotated to show both the amount, the location and the FOIA Exemption under which the deletion is made.

(c) *Denials of requests*. (1) Denials of FOIA requests will be made by the Office of the General Counsel, the Office of the Inspector General, or such other office as may be designated by the Director. The response letter will briefly set forth the reasons for the denial, including any FOIA exemption(s) applied by the Foundation or the OIG in denying the request. It will also provide the name and title or position of the

person responsible for the denial, will inform the requester of the right to appeal, and will, where appropriate, include an estimate of the volume of any requested materials withheld. An estimate need not be provided when the volume is otherwise indicated through deletions on records disclosed in part, or if providing an estimate would harm an interest protected by an applicable exemption.

(2) Requesters can appeal an agency determination to withhold all or part of any requested record; a determination that a requested record does not exist or cannot be located; a determination that what has been requested is not a record subject to the Act; a disapproval of a fee category claim by a requester; denial of a fee waiver or reduction; or a denial of a request for expedited treatment (see § 612.9).

§ 612.7 Exemptions.

(a) *Exemptions from disclosure*. The following types of records or information may be withheld as exempt in full or in part from mandatory public disclosure:

(1) *Exemption 1—5 U.S.C. 552(b)(1)*. Records specifically authorized and properly classified pursuant to Executive Order to be kept secret in the interest of national defense or foreign policy. NSF does not have classifying authority and normally does not deal with classified materials.

(2) *Exemption 2—5 U.S.C. 552(b)(2)*. Records related solely to the internal personnel rules and practices of NSF. This exemption primarily protects information that if released would allow the recipient to circumvent a statute or agency regulation. Administrative information such as rules relating to the work hours, leave, and working conditions of NSF personnel, or similar matters, can be disclosed to the extent that no harm would be caused to the functions to which the information pertains. Examples of records exempt from disclosure include, but are not limited to:

(i) Operating rules, guidelines, manuals on internal procedure, schedules and methods utilized by NSF investigators, inspectors, auditors and examiners.

(ii) Negotiating positions or limits at least until the execution of a contract (including a grant or cooperative agreement) or the completion of the action to which the negotiating positions were applicable. They may also be exempt pursuant to other provisions of this section.

(iii) Information relating to position management and manpower utilization, such as internal staffing plans, authorizations or controls, or involved in determination of the qualifications of candidates for employment, advancement, or promotion including examination questions and answers.

(iv) Computer software, the release of which would allow circumvention of a statute or NSF rules, regulations, orders, manuals, directives, instructions, or procedures; or the integrity and security of data systems.

(3) *Exemption 3—5 U.S.C. 552(b)(3)*. Records specifically exempted from disclosure by another statute that either requires that the information be withheld in such a way that the agency has no discretion in the matter; or establishes particular criteria for withholding or refers to particular types of information to be withheld. Examples of records exempt from disclosure include, but are not limited to:

(i) Trade secrets, processes, operations, style of work, or apparatus; or the confidential statistical data, type, amount, or source of any income, profits, losses, or expenditures of any person, firm, partnership, corporation or association, 18 U.S.C. 1905;

(ii) Records that disclose any invention in which the Federal Government owns or may own a right, title, or interest (including a nonexclusive license), 35 U.S.C. 205;

(iii) Contractor proposals not specifically set forth or incorporated by reference into a contract, 41 U.S.C. 253b(m);

(iv) Information protected by the Procurement Integrity Act, 41 U.S.C. 423.

(4) *Exemption 4—5 U.S.C. 552(b)(4)*. Trade secrets and commercial or financial information obtained from a person, and privileged or confidential. Information subject to this exemption is that customarily held in confidence by the originator(s), including nonprofit organizations and their employees. Release of such information is likely to cause substantial harm to the competitive position of the originator or submitter, or impair the Foundation's ability to obtain such information in the future. NSF will process information potentially exempted from disclosure by Exemption 4 under § 612.8. Examples of information exempt from disclosure include, but are not limited to:

(i) Information received in confidence, such as grant applications, fellowship applications, and research proposals prior to award;

(ii) Confidential scientific and manufacturing processes or developments, and technical, scientific, statistical data or other information developed by a grantee.

(iii) Technical, scientific, or statistical data, and commercial or financial information privileged or received in confidence from an existing or potential contractor or subcontractor, in connection with bids, proposals, or contracts, concerning contract performance, income, profits, losses, and expenditures, as well as trade secrets, inventions, discoveries, or other proprietary data. When the provisions of 41 U.S.C. 253b(m) or 41 U.S.C. 423 are met, certain proprietary and source selection information may also be withheld under Exemption 3.

(iv) Confidential proprietary information submitted on a voluntary basis.

(v) Statements or information collected in the course of inspections, investigations, or audits, when such statements are received in confidence from the individual and retained in confidence because they reveal trade secrets or commercial or financial information normally considered confidential or privileged.

(5) *Exemption 5—5 U.S.C. 552(b)(5)*. Inter-agency or intra-agency memoranda or letters which would not be available by law to a private party in litigation with NSF. Factual material contained in such records will be considered for release if it can be reasonably segregated and is not otherwise exempt. Examples of records exempt from disclosure include, but are not limited to:

(i) Reports, memoranda, correspondence, work papers, minutes of meetings, and staff papers, containing evaluations, advice, opinions, suggestions, or other deliberative material that are prepared for use within NSF or within the Executive Branch of the Government by agency personnel and others acting in a consultant or advisory capacity;

(ii) Advance information on proposed NSF plans to procure, lease, or otherwise acquire, or dispose of materials, real estate, facilities, services or functions, when such information would provide undue or unfair competitive advantage to private interests or impede legitimate government functions;

(iii) Trade secret or other confidential research development, or commercial information owned by the Government, where premature release is likely to affect the Government's negotiating position or other commercial interest;

(iv) Records prepared for use in proceedings before any Federal or State court or administrative body;

(v) Evaluations of and comments on specific grant applications, research projects or proposals, or potential contractors and their products, whether

made by NSF personnel or by external reviewers acting either individually or in panels, committees or similar groups;

(vi) Preliminary, draft or unapproved documents, such as opinions, recommendations, evaluations, decisions, or studies conducted or supported by NSF;

(vii) Proposed budget requests, and supporting projections used or arising in the preparation and/or execution of a budget; proposed annual and multi-year policy, priorities, program and financial plan and supporting papers;

(viii) Those portions of official reports of inspection, reports of the Inspector General, audits, investigations, or surveys pertaining to safety, security, or the internal management, administration, or operation of NSF, when these records have traditionally been treated by the courts as privileged against disclosure in litigation.

(6) *Exemption 6—5 U.S.C. 552(b)(6).* Personnel and medical files and similar files, the disclosure of which would constitute a clearly unwarranted invasion of personal privacy. The exemption applies to living persons and to family members of a deceased person identified in a record. Information in such files which is not otherwise exempt from disclosure pursuant to other provisions of this section will be released to the subject or to his designated legal representative, and may be disclosed to others with the subject's written consent. Examples of records exempt from disclosure include, but are not limited to:

(i) Reports, records, and other materials pertaining to individual cases in which disciplinary or other administrative action has been or may be taken. Opinions and orders resulting from those administrative or disciplinary proceedings shall be disclosed without identifying details if used, cited, or relied upon as precedent.

(ii) Records compiled to evaluate or adjudicate the suitability of candidates for employment, and the eligibility of individuals (civilian or contractor employees) for security clearances, or for access to classified information.

(iii) Reports and evaluations which reflect upon the qualifications or competence of individuals.

(iv) Personal information such as home addresses and telephone and facsimiles numbers, private e-mail addresses, social security numbers, dates of birth, marital status and the like.

(v) The exemption also applies when the fact of the existence or nonexistence of a responsive record would itself reveal personally private information, and the public interest in disclosure is not sufficient to outweigh the privacy interest.

(7) *Exemption 7—5 U.S.C. 552(b)(7).* Records or information compiled for civil or criminal law enforcement purposes, including the implementation of Executive Orders or regulations issued pursuant to law. This exemption may exempt from mandatory disclosure records not originally created, but later gathered, for law enforcement purposes.

(i) This exemption applies only to the extent that the production of such law enforcement records or information:

(A) Could reasonably be expected to interfere with enforcement proceedings;

(B) Would deprive a person of the right to a fair trial or an impartial adjudication;

(C) Could reasonably be expected to constitute an unwarranted invasion of personal privacy of a living person, or family members of a deceased person identified in a record;

(D) Could reasonably be expected to disclose the identity of a confidential source, including a source within the Federal Government, or a State, local, or foreign agency or authority, or any private institution, that furnished information on a confidential basis; and information furnished by a confidential source and obtained by a criminal law enforcement authority in a criminal investigation;

(E) Would disclose techniques and procedures for law enforcement investigations or prosecutions, or would disclose guidelines for law enforcement investigations or prosecutions if such disclosure could reasonably be expected to risk circumvention of the law, or

(F) Could reasonably be expected to endanger the life or physical safety of any individual.

(ii) Examples of records exempt from disclosure include, but are not limited to:

(A) The identity and statements of complainants or witnesses, or other material developed during the course of an investigation and all materials prepared in connection with related government litigation or adjudicative proceedings;

(B) The identity of firms or individuals investigated for alleged irregularities involving NSF grants, contracts or other matters when no indictment has been obtained, no civil action has been filed against them by the United States, or no government-wide public suspension or debarment has occurred.

(C) Information obtained in confidence, expressed or implied, in the course of a criminal investigation by the NSF Officer of the Inspector General.

(iii) The exclusions contained in 5 U.S.C. 552(c)(1) and (2) may also apply to these records.

(8) *Exemption 8—5 U.S.C. 552(b)(8).* Records contained in or related to examination, operating, or condition reports prepared by, on behalf of, or for the use of any agency responsible for the regulation or supervision of financial institutions.

(9) *Exemption 9—5 U.S.C. 552(b)(9).* Records containing geological and geophysical information and data, including maps, concerning wells.

(b) *Deletion of exempt portions and identifying details.* Any reasonably segregable portion of a record will be provided to requesters after deletion of the portions which are exempt. Whenever any final opinion, order, or other materials required to be made available relates to a private party or parties and the release of the name(s) or other identifying details will constitute a clearly unwarranted invasion of personal privacy, the record shall be published or made available with such identifying details left blank, or shall be published or made available with obviously fictitious substitutes and with a notification such as the following: Names of parties and certain other identifying details have been removed (and fictitious names substituted) in order to prevent a clearly unwarranted invasion of the personal privacy of the individuals involved.

§ 612.8 Business information.

(a) *In general.* Business information obtained by the Foundation from a submitter of that information will be disclosed under the FOIA only under this section's procedures.

(b) *Definitions.* For purposes of this section:

(1) *Business Information* means commercial or financial information obtained by the Foundation from a submitter that may be protected from disclosure under Exemption 4 of the FOIA and § 612.7(a)(4).

(2) *Submitter* means any person or entity from whom the Foundation obtains business information, directly or indirectly. The term includes corporations; state, local, and tribal governments; and foreign governments.

(c) *Designation of business information.* A submitter of business information must use good faith efforts to designate, by appropriate markings, either at the time of submission or at a reasonable time thereafter, any portions of its submission that it considers to be protected from disclosure under Exemption 4. These designations will expire ten years after the date of the submission unless the submitter

requests, and provides justification for, a longer designation period.

(d) *Notice to submitters.* The Foundation will provide a submitter with prompt written notice of a FOIA request or administrative appeal that seeks its business information wherever required under this section, in order to give the submitter an opportunity to object to disclosure of any specified portion of that information under paragraph (f) of this section. The notice shall either describe the business information requested or include copies of the requested records or record portions containing the information.

(e) *Where notice is required.* Notice will be given to a submitter wherever:

(1) The information has been designated in good faith by the submitter as information considered protected from disclosure under Exemption 4; or

(2) The Foundation has reason to believe that the information may be protected from disclosure under Exemption 4.

(f) *Opportunity to object to disclosure.* NSF will allow a submitter a reasonable time, consistent with statutory requirements, to respond to the notice described in paragraph (d) of this section. If a submitter has any objection to disclosure, it must submit a detailed written statement. The statement must specify all grounds for withholding any portion of the information under any exemption of the FOIA and, in the case of Exemption 4, must show why the information is a trade secret, or commercial or financial information that is privileged or confidential. In the event that a submitter fails to respond within the time specified in the notice, the submitter will be considered to have no objection to disclosure of the information. Information provided by a submitter under this paragraph may itself be a record subject to disclosure under the FOIA.

(g) *Notice of intent to disclose.* The Foundation will consider a submitter's objections and specific grounds for nondisclosure in deciding whether to disclose business information. Whenever it decides to disclose business information over the objection of a submitter, the Foundation will give the submitter written notice, which will include:

(1) A statement of the reason(s) why the submitter's disclosure objections were not sustained;

(2) A description of the business information to be disclosed; and

(3) A specified disclosure date, which will be a reasonable time subsequent to the notice.

(h) *Exceptions to notice requirements.* The notice requirements of paragraphs (d) and (g) of this section will not apply if:

(1) The Foundation determines that the information should not be disclosed (the Foundation protects from disclosure to third parties information about specific unfunded applications, including pending, withdrawn, or declined proposals);

(2) The information lawfully has been published or has been officially made available to the public;

(3) Disclosure of the information is required by statute (other than the FOIA) or by a regulation issued in accordance with the requirements of Executive Order 12600 (3 CFR, 1988 Comp., p. 235); or

(4) The designation made by the submitter under paragraph (c) of this section appears obviously frivolous, in which case the Foundation will, within a reasonable time prior to a specified disclosure date, give the submitter written notice of any final decision to disclose the information.

(i) *Notice of FOIA lawsuit.* Whenever a requester files a lawsuit seeking to compel the disclosure of business information, the Foundation will promptly notify the submitter(s). Whenever a submitter files a lawsuit seeking to prevent the disclosure of business information, the Foundation will notify the requester(s).

§ 612.9 Appeals.

(a) *Appeals of denials.* You may appeal a denial of your request to the General Counsel, National Science Foundation, 4201 Wilson Boulevard, Suite 1265, Arlington, VA 22230. You must make your appeal in writing and it must be received by the Office of the General Counsel within ten days of the receipt of the denial (weekends, legal holidays, and the date of receipt excluded). Clearly mark your appeal letter and the envelope ''Freedom of Information Act Appeal.'' Your appeal letter must include a copy of your written request and the denial together with any written argument you wish to submit.

(b) *Responses to appeals.* A written decision on your appeal will be made by the General Counsel. A decision affirming an adverse determination in whole or in part will contain a statement of the reason(s) for the affirmance, including any FOIA exemption(s) applied, and will inform you of the FOIA provisions for court review of the decision. If the adverse determination is reversed or modified on appeal, in whole or in part, you will be notified in a written decision and your request will be reprocessed in accordance with that appeal decision.

(c) *When appeal is required.* If you wish to seek review by a court of any denial, you must first appeal it under this section.

§ 612.10 Fees.

(a) *In general.* NSF will charge for processing requests under the FOIA in accordance with paragraph (c) of this section, except where fees are limited under paragraph (d) of this section or where a waiver or reduction of fees is granted under paragraph (k) of this section. If fees are applicable, NSF will itemize the amounts charged. NSF may collect all applicable fees before sending copies of requested records to a requester. Requesters must pay fees by check or money order made payable to the Treasury of the United States.

(b) *Definitions.* For purposes of this section:

(1) *Commercial use request* means a request from or on behalf of a person who seeks information for a use or purpose that furthers his or her commercial, trade, or profit interests, which can include furthering those interests through litigation. When it appears that the requester will put the records to a commercial use, either because of the nature of the request itself or because NSF has reasonable cause to doubt a requester's stated use, NSF will provide the requester a reasonable opportunity to submit further clarification.

(2) *Direct costs* means those expenses that an agency actually incurs in searching for and duplicating (and, in the case of commercial use requests, reviewing) records to respond to a FOIA request. Direct costs include, for example, the salary of the employee performing the work (the basic rate of pay for the employee, plus 16 percent of that rate to cover benefits) and the cost of operating duplication machinery. Not included in direct costs are overhead expenses such as the costs of space and heating or lighting of the facility in which the records are kept.

(3) *Duplication* means the making of a copy of a record, or of the information contained in it, necessary to respond to a FOIA request. Copies can take the form of paper, microform, audiovisual materials, or electronic records (for example, magnetic tape or disk) among others. NSF will honor a requester's specified preference of form or format of disclosure if the record is readily reproducible by NSF, with reasonable effort, in the requested form or format.

(4) *Educational institution* means a preschool, a public or private elementary or secondary school, an

institution of undergraduate higher education, an institution of graduate higher education, an institution of professional education, or an institution of vocational education, that operates a program of scholarly research. To be in this category, a requester must show that the request is authorized by and made under the auspices of a qualifying institution and that the records are not sought for a commercial use, but are sought to further scholarly research.

(5) *Noncommercial scientific institution* means an institution that is not operated on a ''commercial'' basis, as that term is defined in paragraph (b)(1) of this section, and that is operated solely for the purpose of conducting scientific research, the results of which are not intended to promote any particular product or industry. To be in this category, a requester must show that the request is authorized by and made under the auspices of a qualifying institution and that the records are not sought for a commercial use or to promote any particular product or industry, but are sought to further scientific research.

(6) *Representative of the news media or news media requester* means any person actively gathering news for an entity that is organized and operated to publish or broadcast news to the public. The term ''news'' means information that is about current events or that would be of current interest to the public. Examples of news media entities include television or radio stations broadcasting to the public at large and publishers of periodicals (but only in those instances where they can qualify as disseminators of ''news'') who make their products available for purchase or subscription by the general public. For ''freelance'' journalists to be regarded as working for a news organization, they must demonstrate a solid basis for expecting publication through that organization. A publication contract would be the clearest proof, but the Agency or the OIG, as appropriate, shall also look to the past publication record of a requester in making this determination. To be in this category, a requester must not be seeking the requested records for a commercial use. However, a request for records supporting the news-dissemination function of the requester shall not be considered to be for a commercial use.

(7) *Review* means the examination of a record located in response to a request in order to determine whether any portion of it is exempt from disclosure. It also includes processing any record for disclosure, for example, doing all that is necessary to redact it and prepare it for disclosure. Review costs are recoverable even if a record ultimately is not disclosed. Review time includes time spent considering any formal objection to disclosure made by a business submitter under § 612.8, but does not include time spent resolving general legal or policy issues regarding the application of exemptions.

(8) *Search* means the process of looking for and retrieving records or information responsive to a request. It includes page by page or line by line identification of information within records and also includes reasonable efforts to locate and retrieve information from records maintained in electronic form or format. NSF will ensure that searches are done in the most efficient and least expensive manner reasonably possible. For example, NSF will not search line by line where duplicating an entire document would be quicker and less expensive.

(c) *Fees*. In responding to FOIA requests, NSF will charge the following fees unless a waiver or reduction of fees has been granted under paragraph (k) of this section:

(1) *Search*. (i) Search fees will be charged for all requests—other than requests made by educational institutions, noncommercial scientific institutions, or representatives of the news media—subject to the limitations of paragraph (d) of this section. NSF may charge for time spent searching even if responsive records are not located or are withheld entirely as exempt from disclosure.

(ii) *Manual searches for records*. Whenever feasible, NSF will charge at the salary rate(s) (i.e., basic pay plus 16 percent) of the employee(s) conducting the search. Where a homogeneous class of personnel is used exclusively (e.g., all administrative/clerical or all professional/executive), NSF has established an average rate for the range of grades typically involved. Routine search for records by clerical personnel are charged at $2.50 for each quarter hour. When a non-routine, non-clerical search by professional personnel is conducted (for example, where the task of determining which records fall within a request requires professional time) the charge is $7.50 for each quarter hour.

(iii) *Computer searches of records*. NSF will charge at the actual direct cost of conducting the search. This will include the cost of computer operations for that portion of operating time that is directly attributable to searching for records responsive to a FOIA request and operator/programmer salary (i.e., basic pay plus 16 percent) apportionable to the search. When NSF can establish a reasonable agency-wide average rate for computer operating costs and operator/programmer salaries involved in FOIA searches, the Foundation will do so and charge accordingly.

(2) *Duplication*. Duplication fees will be charged to all requesters, subject to the limitations of paragraph (d) of this section. For a paper photocopy of a record (no more than one copy of which need be supplied), the fee will be 25 cents per page. For copies produced by computer, such as tapes or printouts, NSF will charge the direct costs, including operator time, of producing the copy. For other forms of duplication, NSF will charge the direct costs of that duplication.

(3) *Review*. Review fees will be charged to requesters who make a commercial use request. Review fees will be charged only for the initial record review—in other words, the review done when NSF determines whether an exemption applies to a particular record or record portion at the initial request level. NSF may charge for review even if a record ultimately is not disclosed. No charge will be made for review at the administrative appeal level for an exemption already applied. However, records or record portions withheld under an exemption that is subsequently determined not to apply may be reviewed again to determine whether any other exemption not previously considered applies; the costs of that review are chargeable where it is made necessary by a change of circumstances. Review fees will be charged at the salary rate (basic pay plus 16%) of the employee(s) performing the review.

(d) *Limitations on charging fees*. (1) No search fee will be charged for requests by educational institutions, noncommercial scientific institutions, or representatives of the news media.

(2) Except for requesters seeking records for a commercial use, NSF will provide without charge:

(i) The first 100 pages of duplication (or the cost equivalent); and

(ii) The first two hours of search (or the cost equivalent).

(3) Whenever a total fee calculated under paragraph (c) of this section is $25.00 or less for any request, no fee will be charged.

(4) The provisions of paragraphs (d)(2) and (3) of this section work together. This means that noncommercial requesters will be charged no fees unless the cost of search in excess of two hours plus the cost of duplication in excess of 100 pages totals more than $25.00. Commercial requesters will not be charged unless the costs of search, review, and duplication total more than $25.00.

(e) *Notice of anticipated fees in excess of $25.00.* When NSF determines or estimates that the fees to be charged under this section will exceed $25.00, it will notify the requester of the actual or estimated amount of the fees, unless the requester has indicated a willingness to pay fees as high as those anticipated. If only a portion of the fee can be estimated readily, NSF will advise the requester that the estimated fee may be only a portion of the total fee. In cases in which a requester has been notified that actual or estimated fees exceed $25.00, the request will not be considered perfected and further work will not be done until the requester agrees to pay the anticipated total fee. Any such agreement should be memorialized in writing. A notice under this paragraph will offer the requester an opportunity to discuss the matter with Foundation personnel in order to reformulate the request to meet the requester's needs at a lower cost, if possible. If a requester fails to respond within 60 days of notice of actual or estimated fees with an agreement to pay those fees, NSF may administratively close the request.

(f) *Charges for other services.* Apart from the other provisions of this section, when NSF chooses as a matter of administrative discretion to provide a requested special service—such as certifying that records are true copies or sending them by other than ordinary mail—the direct costs of providing the service will be charged to the requester.

(g) *Charging interest.* NSF may charge interest on any unpaid bill starting on the 31st day following the date of billing the requester. Interest charges will be assessed at the rate provided in 31 U.S.C. 3717 and will accrue from the date of the billing until payment is received by NSF. NSF will follow the provisions of the Debt Collection Act of 1982 (Pub. L. 97–365, 96 Stat. 1749), as amended, and its administrative procedures, including the use of consumer reporting agencies, collection agencies, and offset.

(h) *Aggregating requests.* Where NSF reasonably believes that a requester or a group of requesters acting together is attempting to divide a request into a series of requests for the purpose of avoiding fees, the agency may aggregate those requests and charge accordingly. NSF may presume that multiple requests of this type made within a 30-day period have been made in order to avoid fees. Where requests are separated by a longer period, NSF will aggregate them only where there exists a solid basis for determining that aggregation is warranted under all the circumstances involved. Multiple requests involving unrelated matters will not be aggregated.

(i) *Advance payments.* (1) For requests other than those described in paragraphs (i)(2) and (3) of this section, NSF will not require the requester to make an advance payment—in other words, a payment made before work is begun or continued on a request. Payment owed for work already completed (i.e., a prepayment before copies are sent to a requester) is not an advance payment.

(2) Where NSF determines or estimates that a total fee to be charged under this section will be more than $250.00, it may require the requester to make an advance payment of an amount up to the amount of the entire anticipated fee before beginning to process the request, except where it receives a satisfactory assurance of full payment from a requester that has a history of prompt payment.

(3) Where a requester has previously failed to pay a properly charged fee to any agency within 30 days of the date of billing, NSF may require the requester to pay the full amount due, plus any applicable interest, and to make an advance payment of the full amount of any anticipated fee, before NSF begins to process a new request or continues to process a pending request from that requester.

(4) In cases in which NSF requires advance payment or payment due under paragraph (i)(2) or (3) of this section, the request will not be considered perfected and further work will not be done on it until the required payment is received.

(j) *Other statutes specifically providing for fees.* The fee schedule of this section does not apply to fees charged under any statute that specifically requires an agency to set and collect fees for particular types of records. Where records responsive to requests are maintained for distribution by agencies operating such statutorily based fee schedule programs, NSF will inform requesters of the steps for obtaining records from those sources so that they may do so most economically.

(k) *Waiver or reduction of fees.* (1) Records responsive to a request will be furnished without charge or at a charge reduced below that established under paragraph (c) of this section where NSF determines, based on all available information, that disclosure of the requested information is in the public interest because it is likely to contribute significantly to public understanding of the operations or activities of the government and is not primarily in the commercial interest of the requester.

(2) To determine whether the first fee waiver requirement is met, NSF will consider the following factors:

(i) The subject of the request: Whether the subject of the requested records concerns ''the operations or activities of the government.'' The subject of the requested records must concern identifiable operations or activities of the federal government, with a connection that is direct and clear, not remote or attenuated.

(ii) The informative value of the information to be disclosed: Whether disclosure is ''likely to contribute'' to an understanding of government operations or activities. The disclosable portions of the requested records must be meaningfully informative about government operations or activities in order to be ''likely to contribute'' to an increased public understanding of those operations or activities. Disclosure of information already in the public domain, in either duplicative or substantially identical form, is unlikely to contribute to such understanding where nothing new would be added to the public's understanding.

(iii) The contribution to an understanding of the subject by the public likely to result from disclosure: Whether disclosure of the requested information will contribute to ''public understanding.'' The disclosure must contribute to the understanding of a reasonably broad audience of persons interested in the subject as opposed to the individual understanding of the requester. A requester's expertise in the subject area and ability and intention to effectively convey information to the public will be considered. A representative of the news media as defined in paragraph (b)(6) of this section will normally be presumed to satisfy this consideration.

(iv) The significance of the contribution to public understanding: Whether disclosure is likely to contribute ''significantly'' to public understanding of government operations or activities. The public's understanding of the subject in question must be enhanced by the disclosure to a significant extent as compared to the level of public understanding existing prior to the disclosure. NSF will make no value judgments about whether information that would contribute significantly to public understanding of the operations or activities of the government is ''important'' enough to be made public.

(3) To determine whether the second fee waiver requirement is met, NSF will consider the following factors:

(i) The existence and magnitude of a commercial interest: Whether the

requester has a commercial interest that would be furthered by the requested disclosure. NSF will consider any commercial interest of the requester (with reference to the definition of ''commercial use'' in paragraph (b)(1) of this section), or of any person on whose behalf the requester may be acting, that would be furthered by the requested disclosure. Requesters will be given an opportunity in the administrative process to provide explanatory information regarding this consideration.

(ii) The primary interest in disclosure: Whether any identified commercial interest of the requester is sufficiently large, in comparison with the public interest in disclosure, that disclosure is ''primarily in the commercial interest of the requester.'' A fee waiver or reduction is justified where the public interest standard is satisfied and that public interest is greater in magnitude than that of any identified commercial interest in disclosure. NSF ordinarily will presume that where a news media requester has satisfied the public interest standard, the public interest will be the interest primarily served by disclosure to that requester. Disclosure to data brokers or others who merely compile and market government information for direct economic return will not be presumed to primarily serve the public interest.

(4) Where only some of the requested records satisfy the requirements for a waiver of fees, a waiver will be granted for those records.

(5) Requests for the waiver or reduction of fees should address the factors listed in paragraphs (k)(2) and (3) of this section, insofar as they apply to each request.

§ 612.11 Other rights and services.

Nothing in this part will be construed to entitle any person, as of right, to any service or to the disclosure of any record to which such person is not entitled under the FOIA.

Dated: April 7, 2009.

Amy Northcutt,

Deputy General Counsel.

[FR Doc. E9–8262 Filed 4–10–09; 8:45 am]

BILLING CODE 7555–01–P

DEPARTMENT OF DEFENSE

GENERAL SERVICES ADMINISTRATION

NATIONAL AERONAUTICS AND SPACE ADMINISTRATION

48 CFR Parts 2, 19 and 52

[FAR Case 2006–005; Docket 2009–0014; Sequence 1]

RIN 9000–AL18

Federal Acquisition Regulation; FAR Case 2006–005, HUBZone Program Revisions

AGENCIES: Department of Defense (DoD), General Services Administration (GSA), and National Aeronautics and Space Administration (NASA).

ACTION: Proposed rule.

SUMMARY: The Civilian Agency Acquisition Council and the Defense Acquisition Regulations Council (Councils) are proposing to amend the Federal Acquisition Regulation (FAR) to implement revisions to the Small Business Administration's HUBZone Program as a result of revisions to the Small Business Administration's regulations.

DATES: Interested parties should submit written comments to the FAR Secretariat on or before June 12, 2009 to be considered in the formulation of a final rule.

ADDRESSES: Submit comments identified by FAR case 2006–005 by any of the following methods:

- *Regulations.gov: http://www.regulations.gov*. Submit comments via the Federal eRulemaking portal by inputting ''FAR Case 2006–005'' under the heading ''Comment or Submission''. Select the link ''Send a Comment or Submission'' that corresponds with FAR Case 2006–005. Follow the instructions provided to complete the ''Public Comment and Submission Form''. Please include your name, company name (if any), and ''FAR Case 2006–005'' on your attached document.
- *Fax:* 202–501–4067.
- *Mail:* General Services Administration, Regulatory Secretariat (VIR), 1800 F Street, NW., Room 4041, ATTN: Hada Flowers, Washington, DC 20405.

Instructions: Please submit comments only and cite FAR case 2006–005 in all correspondence related to this case. All comments received will be posted without change to *http://www.regulations.gov*, including any personal and/or business confidential information provided.

FOR FURTHER INFORMATION CONTACT: Rhonda Cundiff, Procurement Analyst, at (202) 501–0044 for clarification of content. For information pertaining to status or publication schedules, contact the FAR Secretariat at (202) 501–4755. Please cite FAR case 2006–005.

SUPPLEMENTARY INFORMATION:

A. Background

On May 24, 2004, the Small Business Administration (SBA) published a final rule in the **Federal Register** at 69 FR 29411, and on August 30, 2005, an interim rule at 70 FR 51243 amending its HUBZone regulations at 13 CFR Part 126 to implement the Small Business Reauthorization Act of 2000, the Consolidated Appropriations Act, 2005, and other various policy changes. This rule proposes to amend the FAR, as follows, to implement changes in the HUBZone regulations:

- FAR 19.1303(d), Status as a qualified HUBZone small business concern; 52.219–3, Notice of Total HUBZone Set-Aside; and 52.219–4, Notice of Price Evaluation Preference for HUBZone Small Business Concerns, are revised to stipulate that to be eligible for a HUBZone contract, a HUBZone small business concern must be a HUBZone small business concern both at the time of its initial offer and at the time of contract award. SBA revised the HUBZone regulations to require HUBZone small business concerns to ''certify,'' at the time of their initial offers and again at the time of contract award, their HUBZone small business concern status. While the SBA regulations use the term ''certify,'' the certification is intended to be a ''representation'' as used in the FAR. Small business concern offerors are already required to ''represent'' their HUBZone small business concern status at the time of their initial offer.
- FAR 52.219–3 and 52.219–4 are revised to add a requirement that the HUBZone concern provide to the contracting officer a copy of the notice required by 13 CFR 126.501 if material changes occur before award that could affect its HUBZone eligibility.
- The performance of work requirements of sections 52.219–3 and 52.219–4 are revised to be consistent with the SBA HUBZone regulations. Alternate I would be used if there are not at least two HUBZones that can meet the 50 percent requirement. FAR 19.1308, Performance of work requirements (limitations on subcontracting), is also revised to reflect the changes in the performance of work requirements.
- The definition of ''HUBZone contract,'' which is used in the SBA

regulations, is added at section 2.101, Definitions.

This rule also proposes to revise the FAR as follows:

• Adds ''qualified base closure areas'' and ''redesignated areas'' to the list of HUBZone locations in the definition of ''HUBZone'' at section 2.101 as required by the Small Business Reauthorization Act of 2000 and the Consolidated Appropriations Act, 2005.

• Adds ''HUBZone joint ventures'' to the list of affiliates that are controlled through contractual relationships at section 19.101, Explanation of terms, to recognize that HUBZone joint ventures, comprised of members who are individually small under the appropriate size standard, can qualify as HUBZone small business concerns when the aggregate total of the joint venture is small under the size standard for the NAICS code assigned to the contract, or alternative, when the aggregate total of the joint venture is not small, and then either: (1) for a procurement having a revenue-based size standard, the estimated contract value exceeds half the size standard corresponding to the NAICS code assigned to the contract; or (2) for a procurement having an employee-based size standard, the estimated contract value exceeds $10 million.

• Adds a definition in Subpart 19.3, Determination of Small Business Status for Small Business Programs, for ''interested party'' and a notice that SBA will dismiss protests from offerors SBA determines are not ''interested parties.''

• Changes the protest procedures in 19.306, Protesting a firm's status as a HUBZone small business concern, to require protests to be ''submitted'' instead of ''received'' by certain specified dates consistent with SBA regulations.

• At 19.800, General, removes an obsolete reference to priority of HUBZone 8(a) concerns, deleted from SBA regulations.

• Adds options for obtaining information on HUBZone small business concerns at 19.1303, Status as a qualified HUBZone small business concern.

• Changes the nonmanufacturer rule at 19.102, Size standards, paragraph (f)(8), 19.1303(e), 52.219–3(e), and 52.219–4(f) to be consistent with SBA HUBZone regulations.

• Changes the HUBZone set-aside procedures at 19.1305 to business days, and changes 19.1305(e)(3), HUBZone set-aside procedures, to require SBA to file its formal appeal with the head of the agency.

• Changes procedures for HUBZone sole source awards at 19.1306, HUBZone sole source awards, to be consistent with the HUBZone regulations.

• Adds procedures at 19.1307, Price evaluation preference for HUBZone small business concerns, and 52.219–4 for how to make award when, after considering the price evaluation preference, an offer submitted by a qualified HUBZone is equal to an offer submitted by a large business.

• Retitles clause 52.219–3, ''Notice of Total HUBZone Set-Aside,'' to ''Notice of Total HUBZone Set-Aside or Sole Source Award,'' and clarifies the clause prescription for sole source awards to implement the performance of the work requirements of the clause in sole source HUBZone awards.

• In 52.219–3 and 52–219–4, adds a reference to SBA definitions on limitations on subcontracting.

• Adds to 52.219–8(d), Utilization of Small Business Concerns, the requirement that the contractor shall confirm that a subcontractor is certified by SBA as a HUBZone small business by accessing the Central Contractor Registration database or contacting SBA. Additional language to 52.219–8(d) requires that for a competitive subcontract, the contractor must inform each unsuccessful subcontract offeror in writing of the name and location of the apparent successful offeror prior to award of the contract to the successful subcontract offer.

In addition to these HUBZone small business changes, this rule proposes to amend the FAR as follows:

• Changes the term ''8(a) program'' at 19.000, Scope of part to ''8(a) business development program'' to reflect the complete title of the program. To avoid confusion, however, other references to the 8(a) program are unchanged since nothing other than the title of the program is changed.

• Deletes the terminology ''acquisition and property sale assistance'' from ''joint venture—acquisition and property sales assistance'' at 19.101 because the term ''acquisition'' added no meaning and ''property sales'' are beyond the scope of the FAR. The proposed rule also deletes the other reference to a ''property sale'' in the same paragraph.

This is not a significant regulatory action and, therefore, was not subject to review under Section 6(b) of Executive Order 12866, Regulatory Planning and Review, dated September 30, 1993. This rule is not a major rule under 5 U.S.C. 804.

B. Regulatory Flexibility Act

On May 24, 2004, the Small Business Administration (SBA) published a final rule in the **Federal Register** at 69 FR 29411, and on August 30, 2005, an interim rule at 70 FR 51243 amending its HUBZone regulations at 13 CFR Part 126 to implement the Small Business Reauthorization Act of 2000, the Consolidated Appropriations Act, 2005, and other various policy changes. This rule proposes to revise the Federal Acquisition Regulation (FAR) in order to update the FAR to comply with the Small Business Administration's regulations as they pertain to acquisition.

The changes may have a significant economic impact on a substantial number of small entities within the meaning of the Regulatory Flexibility Act, 5 U.S.C. 601, *et seq.*

An Initial Regulatory Flexibility Analysis (IRFA) has been prepared and will be provided to the Chief Counsel for Advocacy for the Small Business Administration. The reason these changes may have a significant economic impact on a substantial number of small entities is because the small entities must comply with additional HUBZone requirements as discussed below. In addition, the proposed rule adds ''qualified base closure areas'' and ''redesignated areas'' to the list of HUBZone locations in the definition of ''HUBZone''. This means that there will be more qualified HUBZone contractors competing for HUBZone contracts. The analysis is summarized as follows:

The proposed FAR rule requires a HUBZone small business concern to be eligible for the HUBZone Program both at the time of its initial offer and at the time of contract award in addition to requiring the HUBZone concern to provide to the contracting officer a copy of the notice required by 13 CFR 126.501 if material changes occur before award that could affect its HUBZone eligibility. These requirements will eliminate some small businesses that are not eligible in both instances. The requirement for a HUBZone small business concern to provide to the contracting officer a copy of the notice required by 13 CFR 126.501 if material changes occur before award that could affect its HUBZone eligibility will eliminate those vendors that are no longer a HUBZone concern. This will result in those HUBZone concerns that are still eligible to compete having to compete only among other eligible HUBZone concerns, thus increasing their chances for award.

In addition, the proposed rule impacts some small business concerns by revising the FAR to state that except for construction or service contracts, when the total value of the contract exceeds

$25,000, a HUBZone small business concern nonmanufacturer must agree to furnish in performing the contract only end items manufactured or produced by HUBZone small business manufacturer concerns. In SBA's final rule dated August 30, 2005, SBA states that it is difficult to obtain a precise quantitative estimate of the impact these changes might have on small businesses. However, SBA estimates that 220 counties will be added as HUBZones a result of base closures.

The FAR Secretariat has submitted a copy of the IRFA to the Chief Counsel for Advocacy of the Small Business Administration. A copy of the IRFA may be obtained from the FAR Secretariat. The Councils will consider comments from small entities concerning the affected FAR parts 2, 19 and 52 in accordance with 5 U.S.C. 610. Comments must be submitted separately and should cite 5 U.S.C 601, *et seq.* (FAR case 2006–005), in correspondence.

C. Paperwork Reduction Act

The Paperwork Reduction Act does not apply because the proposed changes to the FAR do not impose information collection requirements that require the approval of the Office of Management and Budget under 44 U.S.C. Chapter 35, *et seq.*

List of Subjects in 48 CFR Parts 2, 19 and 52

Government procurement.

Dated: March 20, 2009.

Al Matera,

Director, Office of Acquisition Policy.

Therefore, DoD, GSA, and NASA propose amending 48 CFR parts 2, 19 and 52 as set forth below:

1. The authority citation for 48 CFR parts 2, 19 and 52 continues to read as follows:

Authority: 40 U.S.C. 121(c); 10 U.S.C. chapter 137; and 42 U.S.C. 2473(c).

PART 2—DEFINITIONS OF WORDS AND TERMS

2. Amend section 2.101 in paragraph (b)(2) by revising the definition ''HUBZone''; adding, in alphabetical order, the definition ''HUBZone contract''; and adding a second sentence to the definition ''HUBZone small business concern''. The revised and added text read as follows:

2.101 Definitions.

* * * * *

(b) * * *

(2) * * *

HUBZone means a historically underutilized business zone that is an area located within one or more qualified census tracts, qualified nonmetropolitan counties, lands within the external boundaries of an Indian reservation, qualified base closure areas, or redesignated areas, as defined in 13 CFR 126.103.

HUBZone contract means a contract awarded to a ''HUBZone small business'' concern through any of the following procurement methods:

(1) A sole source award to a HUBZone small business concern;

(2) Set-aside awards based on competition restricted to HUBZone small business concerns; or

(3) Awards to HUBZone small business concerns through full and open competition after a price evaluation preference in favor of HUBZone small business concerns.

HUBZone small business concern * * * 13 CFR 126.103.

* * * * *

PART 19—SMALL BUSINESS PROGRAMS

3. Amend section 19.000 by revising paragraph (a)(6) to read as follows:

19.000 Scope of part.

(a) * * *

(6) The ''8(a)'' business development program (hereafter referred to as 8(a) program), under which agencies contract with the SBA for goods or services to be furnished under a subcontract by a small disadvantaged business concern;

* * * * *

4. Amend section 19.101, in the definition ''Affiliates'' by redesignating paragraphs (7)(ii) through (7)(v) as (7)(iii) through (7)(vi), respectively, and adding a new paragraph (7)(ii); and revising the paragraph heading and first sentence of the newly redesignated paragraph (7)(iii) to read as follows:

19.101 Explanation of terms.

* * * * *

Affiliates. * * *

(7) * * *

(ii) *HUBZone joint venture.* A HUBZone joint venture of two or more HUBZone small business concerns may submit an offer for a HUBZone contract as long as each concern is small under the size standard corresponding to the NAICS code assigned to the requirement, provided one of the following conditions apply:

(A) The aggregate total of the joint venture is small under the size standard corresponding to the NAICS code assigned to the contract.

(B) The aggregate total of the joint venture is not small under the size standard corresponding to the NAICS code assigned to the contract and either—

(*1*) For a revenue-based size standard, the estimated contract value exceeds half the size standard corresponding to the NAICS code assigned to the contract; or

(*2*) For an employee-based size standard, the estimated contract value exceeds $10 million.

(iii) *Joint venture.* Concerns submitting offers on a particular acquisition as joint ventures are considered as affiliated and controlling or having the power to control each other with regard to performance of the contract. * * *

* * * * *

5. Amend section 19.102 by adding paragraph (f)(8) to read as follows:

19.102 Size standards.

* * * * *

(f) * * *

(8) For non-manufacturer rules pertaining to HUBZone contracts, see 19.1303(e).

* * * * *

6. Revise section 19.306 to read as follows:

19.306 Protesting a firm's status as a HUBZone small business concern.

(a) *Definition* as used in this section—

Interested party has the meaning given in 13 CFR 126.103.

(b) *HUBZone Small Business Status.* (1) For sole source acquisitions, the SBA or the contracting officer may protest the apparently successful offeror's HUBZone small business concern status.

(2) For all other acquisitions, an offeror that is an interested party, the contracting officer, or the SBA may protest the apparently successful offeror's HUBZone small business concern status.

(c) Protests relating to whether a HUBZone small business concern is a small business for purposes of any Federal program are subject to the procedures of subpart 19.3. Protests relating to small business size status for the acquisition and the HUBZone qualifying requirements will be processed concurrently by SBA.

(d) All protests must be in writing and must state all specific grounds for the protest. Assertions that a protested concern is not a qualified HUBZone small business concern, without setting forth specific facts or allegations, are insufficient. An offeror must submit its protest to the contracting officer. The contracting officer and the SBA must submit protests to SBA's Associate

Administrator for the HUBZone Program (AA/HUB).

(e) The protest of an offeror that is an interested party must be submitted by close of business on the fifth business day after bid opening (in sealed bid acquisitions) or by close of business on the fifth business day after notification by the contracting officer of the apparently successful offeror (in negotiated acquisitions). Any protest submitted after these time limits is untimely, unless it is submitted by the SBA or the contracting officer. Any protest received prior to bid opening or notification of intended award, whichever applies, is premature and shall be returned to the protester.

(f) Except for premature protests, the contracting officer shall forward all protests received, notwithstanding whether the contracting officer believes that the protest is not sufficiently specific, timely, or submitted by an interested party. The contracting officer shall also forward a referral letter with the information required by 13 CFR 126.801(e).

(g) Protests may be submitted in person or by facsimile, express delivery service, or U.S. mail (postmarked within the applicable time period) to: Associate Administrator/Historically Underutilized Business, AA/HUB, U.S. Small Business Administration, 409 3rd Street, SW., Washington, DC 20416; Fax (202) 205–7167. The AA/HUB will notify the protester and the contracting officer that the protest was received and indicate whether the protest will be processed or dismissed for lack of timeliness or specificity. A protest will be dismissed if SBA determines the protester is not an interested party.

(h) SBA will determine the HUBZone status of the protested HUBZone small business concern within 15 business days after receipt of a protest. If SBA does not contact the contracting officer within 15 business days, the contracting officer may award the contract to the apparently successful offeror, unless the contracting officer has granted SBA an extension. The contracting officer may award the contract after receipt of a protest if the contracting officer determines in writing that an award must be made to protect the public interest.

(i) SBA will notify the contracting officer, the protester, and the protested concern of its determination. The determination is effective immediately and is final unless overturned on appeal by SBA's Associate Deputy Administrator for Government Contracting and Business Development (ADA/GC&BD).

(j) The protested HUBZone small business concern, the protester, or the contracting officer may file appeals of protest determinations with SBA's ADA/GC&BD. The ADA/GC&BD must receive the appeal no later than 5 business days after the date of receipt of the protest determination. SBA will dismiss any appeal received after the 5-day period.

(k) The appeal must be in writing. The appeal must identify the protest determination being appealed and must set forth a full and specific statement as to why the decision is erroneous or what significant fact the AA/HUB failed to consider.

(l) The party appealing the decision must provide notice of the appeal to the contracting officer and either the protested HUBZone small business concern or the original protester, as appropriate. SBA will not consider additional information or changed circumstances that were not disclosed at the time of the AA/HUB's decision or that are based on disagreement with the findings and conclusions contained in the determination.

(m) The ADA/GC&BD will make its decision within 5 business days of the receipt of the appeal, if practicable, and will base its decision only on the information and documentation in the protest record as supplemented by the appeal. SBA will provide a copy of the decision to the contracting officer, the protester, and the protested HUBZone small business concern. The SBA decision, if received before award, will apply to the pending acquisition. SBA rulings received after award will not apply to that acquisition. The ADA/GC&BD's decision is the final decision.

7. Amend section 19.703 by revising paragraph (d)(1)(i) to read as follows:

19.703 Eligibility requirements for participating in the program.

* * * * *

(d) * * *

(1) * * *

(i) HUBZone web page at *http://dsbs.sba.gov/dsbs/dsp_searchhubzone.cfm* or *https://eweb1.sba.gov/hubzone/internet/general/approved-firms.cfm;*

* * * * *

19.800 [Amended]

8. Amend section 19.800 by removing the second sentence of paragraph (e).

19.803 [Amended]

9. Amend section 19.803 by removing from the end of paragraph (c) ''(but see 19.800(e))''.

19.804–3 [Amended]

10. Amend section 19.804–3 by removing from the end of paragraph (a) ''(AA)/8(a)BD'' and adding ''AA/BD'' in its place.

19.805–1 [Amended]

11. Amend section 19.805–1 by removing from paragraph (d) ''(AA/8(a)BD)'' each time it appears and adding ''AA/BD'' in its place.

12. Amend section 19.1301 by revising paragraph (a) to read as follows:

19.1301 General.

(a) The Historically Underutilized Business Zone (HUBZone) Act of 1997 (15 U.S.C. 631 note) created the HUBZone Program.

* * * * *

13. Amend section 19.1303 by revising the section heading and paragraphs (b), (c), and (d) and adding paragraph (e). The revised and added text read as follows:

19.1303 Status as a HUBZone small business concern.

* * * * *

(b) If the SBA determines that a concern is a HUBZone small business concern, it will issue a certification to that effect and will add the concern to the List of Qualified HUBZone Small Business Concerns *https://eweb1.sba.gov/hubzone/internet/general/approved-firms.cfm*. Only firms on the list are HUBZone small business concerns, eligible for HUBZone preferences. HUBZone preferences apply without regard to the place of performance. Information on HUBZone small business concerns can also be obtained at *http://dsbs.sba.gov/dsbs/dsp_dsbs.cfm* or by writing to the Associate Administrator for the HUBZone Program (AA/HUB) at U.S. Small Business Administration, 409 3rd Street, SW., Washington, DC 20416 or at *hubzone@sba.gov*.

(c) A joint venture (see 19.101) may be considered a HUBZone small business concern if it meets the criteria in the explanation of affiliates in 19.101.

(d) To be eligible for a HUBZone contract under this section, a HUBZone small business concern must be a HUBZone small business concern both at the time of its initial offer and at the time of contract award.

(e) A HUBZone small business concern may submit an offer for supplies as a nonmanufacturer if it meets the requirements of the nonmanufacturer rule set forth at 13 CFR 121.406(b)(1) and if the small manufacturer providing the end item is also a HUBZone small business concern.

(1) There are no waivers to the nonmanufacturer rule for HUBZone contracts.

(2) For HUBZone contracts at or below $25,000 in total value, a HUBZone small business concern may supply the end item of any manufacturer, including a large business, so long as the product acquired is manufactured or produced in the United States.

14. Amend section 19.1305 by removing from paragraph (a) ''A participating agency'' and adding ''The'' in its place; and revising paragraphs (c) and (e) to read as follows:

19.1305 HUBZone set-aside procedures.

* * * * *

(c) A contracting officer may set aside acquisitions exceeding the micro-purchase threshold that do not exceed the simplified acquisition threshold for competition restricted to HUBZone small business concerns at the sole discretion of the contracting officer, provided the requirements of paragraph (b) of this section can be satisfied.

* * * * *

(e) The procedures at 19.202–1 and, except for acquisitions not exceeding the simplified acquisition threshold, at 19.402 apply to this section.

(1) When the SBA intends to appeal a contracting officer's decision to reject a recommendation of the SBA procurement center representative (or, if a procurement center representative is not assigned, see 19.402(a)) to set aside an acquisition for competition restricted to HUBZone small business concerns, the SBA procurement center representative shall notify the contracting officer, in writing, of its intent within 5 business days of receiving the contracting officer's notice of rejection.

(2) Upon receipt of notice of SBA's intent to appeal, the contracting officer shall suspend action on the acquisition unless the head of the contracting activity makes a written determination that urgent and compelling circumstances, which significantly affect the interests of the Government, exist.

(3) Within 15 business days of SBA's notification to the contracting officer, SBA must file its formal appeal with the head of the agency, or the appeal will be deemed withdrawn. The head of the agency shall reply to SBA within 15 business days of receiving the appeal. The decision of the head of the agency shall be final.

15. Amend section 19.1306 by revising paragraph (a) to read as follows:

19.1306 HUBZone sole source awards.

(a) An agency contracting officer may award contracts to HUBZone small business concerns on a sole source basis without considering small business set-asides (see Subpart 19.5), provided none of the exclusions at 19.1304 apply and—

(1) The contracting officer does not have a reasonable expectation that offers would be received from two or more HUBZone small business concerns;

(2) The anticipated price of the contract, including options, will not exceed—

(i) $5.5 million for a requirement within the NAICS codes for manufacturing; or

(ii) $3.5 million for a requirement within all other NAICS codes;

(3) The acquisition is greater than the simplified acquisition threshold (see part 13);

(4) The HUBZone small business concern has been determined to be a responsible contractor with respect to performance; and

(5) Award can be made at a fair and reasonable price.

* * * * *

16. Amend section 19.307 by adding paragraph (e) to read as follows:

19.1307 Price evaluation preference for HUBZone small business concerns.

* * * * *

(e) When the two highest rated offerors are a HUBZone small business concern and a large business, and the evaluated offer of the HUBZone small business concern is equal to the evaluated offer of the large business after considering the price evaluation preference, the contracting officer shall award the contract to the HUBZone small business concern.

19.1308 [Redesignated as 19.1309]

17. Redesignate section 19.1308 as 19.1309; and add a new section 19.1308 to read as follows:

19.1308 Performance of work requirements (limitations on subcontracting).

(a) Before issuing a solicitation for general construction or construction by special trade contractors, the contracting officer must determine if at least two HUBZone small business concerns can individually perform at least 50 percent of the cost of contract performance incurred for personnel, using its own employees or subcontract employees of other HUBZone small business concerns. If not, the clause at 52.219–3 Notice of Total HUBZone Set-Aside or Sole Source Award, or 52.219–4, Notice of Price Evaluation Preference for HUBZone Small Business Concerns, shall be used, as applicable, with its Alternate I (see 19.1309).

(b) See 13 CFR 125.6 for definitions of terms used in paragraph (a) of this section.

18. Revise the newly designated section 19.1309 to read as follows:

19.1309 Contract clauses.

(a) The contracting officer shall insert the clause 52.219–3, Notice of Total HUBZone Set-Aside or Sole Source Award, in solicitations and contracts for acquisitions that are set aside for, or awarded on a sole source basis to, HUBZone small business concerns under 19.1305 or 19.1306. The contracting officer shall insert the clause with its Alternate I if market research indicates that there are not at least two HUBZone small business concerns that can meet the requirements of 19.1308.

(b) The contracting officer shall insert the clause at FAR 52.219–4, Notice of Price Evaluation Preference for HUBZone Small Business Concerns, in solicitations and contracts for acquisitions conducted using full and open competition. The clause shall not be used in acquisitions that do not exceed the simplified acquisition threshold. The contracting officer shall insert the clause with its Alternate I if market research indicates that there are not at least two HUBZone small business concerns that can meet the requirements of 19.1308.

PART 33—PROTESTS, DISPUTES, AND APPEALS

19. Amend section 33.102 by revising the second sentence of paragraph (a) to read as follows:

33.102 General.

(a) * * * (See 19.302 for protests of small business status, 19.305 for protests of disadvantaged business status, 19.306 for protests of HUBZone small business status, and 19.307 for protests of service-disabled veteran-owned small business status.

* * * * *

PART 52—SOLICITATION PROVISIONS AND CONTRACT CLAUSES

20. Amend section 52.212–3 by revising the date of the provision; removing from paragraph (c)(10)(i) the word ''change'' and adding ''changes'' in its place and removing the word ''has'' and adding ''have'' in its place; and revising paragraph (c)(10)(ii). The revised text reads as follows:

52.212–3 Offeror Representations and Certifications—Commercial Items.

* * * * *

Offeror Representations and Certifications—Commercial Items (Date)

* * * * *

(c) * * *

(10) * * *

(ii) It □ is, □ is not a HUBZone joint venture that complies with the requirements of 13 CFR Part 126, and the representation in paragraph (c)(10)(i) of this provision is accurate for each HUBZone small business concern participating in the HUBZone joint venture. [*The offeror shall enter the names of each of the HUBZone small business concerns participating in the HUBZone joint venture:* _____.] Each HUBZone small business concern participating in the HUBZone joint venture shall submit a separate signed copy of the HUBZone representation.

* * * * *

(End of provision)

21. Amend section 52.212–5 by revising the date of the clause, paragraphs (b)(3), (b)(4), and (b)(8); and removing from paragraph (e)(1)(ii) ''Feb 2009'' and adding ''(Date)'' in its place. The revised text reads as follows:

52.212–5 Contract Terms and Conditions required to implement Statutes or Executive Orders—Commercial items.

* * * * *

CONTRACT TERMS AND CONDITIONS REQUIRED TO IMPLEMENT STATUTES OR EXECUTIVE ORDERS—COMMERCIAL ITEMS (DATE)

* * * * *

(b) * * *

____(3) 52.219–3, Notice of Total HUBZone Set-Aside or Sole Source Award (Date) (15 U.S.C. 657a).

____(4) 52.219–4, Notice of Price Evaluation Preference for HUBZone Small Business Concerns (Date) (if the offeror elects to waive the preference, it shall so indicate in its offer) (15 U.S.C. 657a).

* * * * *

___(8) 52.219–8, Utilization of Small Business Concerns (Date) (15 U.S.C. 637(d)(2) and (3)).

* * * * *

(End of clause)

22. Amend section 52.213–4 by revising the date of the clause and paragraph (a)(2)(vi) to read as follows:

52.213–4 Terms and Conditions—Simplified Acquisitions (Other Than Commercial Items).

* * * * *

TERMS AND CONDITIONS—SIMPLIFIED ACQUISITIONS (OTHER THAN COMMERCIAL ITEMS) (DATE)

* * * * *

(a) * * *

(2) * * *

(vi) 52.244–6, Subcontracts for Commercial Items (Date).

* * * * *

(End of clause)

23. Amend section 52.219–1 by revising the date of the clause and paragraphs (b)(6)(i) and (b)(6)(ii) to read as follows:

52.219–1 Small Business Program Representations.

* * * * *

SMALL BUSINESS PROGRAM REPRESENTATIONS (DATE)

* * * * *

(b) * * *

(6) * * *

(i) It □ is, □ is not a HUBZone small business concern listed, on the date of this representation, on the List of Qualified HUBZone Small Business Concerns maintained by the Small Business Administration; and no material changes in ownership and control, principal office, or HUBZone employee percentage have occurred since it was certified in accordance with 13 CFR Part 126; and

(ii) It □ is, □ is not a HUBZone joint venture that complies with the requirements of 13 CFR Part 126, and the representation in paragraph (b)(6)(i) of this provision is accurate for each HUBZone small business concern participating in the HUBZone joint venture. [*The offeror shall enter the names of each of the HUBZone small business concerns participating in the HUBZone joint venture:* _____.] Each HUBZone small business concern participating in the HUBZone joint venture shall submit a separate signed copy of the HUBZone representation.

* * * * *

24. Revise section 52.219–3 to read as follows:

52.219–3 Notice of Total HUBZone Set-Aside or Sole Source Award.

As prescribed in 19.1309(a), insert the following clause:

NOTICE OF TOTAL HUBZONE SET-ASIDE OR SOLE SOURCE AWARD (DATE)

(a) *Definitions.* See 13 CFR 125.6(e) for definitions of terms used in paragraph (c).

(b) *General.* (1) Offers are solicited only from HUBZone small business concerns. Offers received from concerns that are not HUBZone small business concerns will not be considered.

(2) Any award resulting from this solicitation will be made to a HUBZone small business concern.

(c) *Agreement.* A HUBZone small business concern agrees that, in the performance of the contract, in the case of a contract for—

(1) Services (except construction), at least 50 percent of the cost of personnel for contract performance will be spent for employees of the concern or employees of other HUBZone small business concerns;

(2) Supplies (other than acquisition from a nonmanufacturer of the supplies), at least 50 percent of the cost of manufacturing, excluding the cost of materials, will be performed by the concern or other HUBZone small business concerns;

(3) General construction, at least 50 percent of the cost of the contract performance incurred for personnel will be spent on the concern's employees or on a combination of the concern's employees and employees of HUBZone small business concern subcontractors. At least 15 percent of the cost of contract performance incurred for personnel will be spent on the concern's employees. No more than 50 percent of the cost of contract performance incurred for personnel will be subcontracted to concerns that are not HUBZone small business concerns; or

(4) Construction by special trade contractors, at least 50 percent of the cost of the contract performance incurred for personnel will be spent on the concern's employees or on a combination of the concern's employees and employees of HUBZone small business concern subcontractors. At least 25 percent of the cost of contract performance incurred for personnel will be spent on the concern's employees. No more than 50 percent of the cost of contract performance incurred for personnel will be subcontracted to concerns that are not HUBZone small business concerns.

(d) A HUBZone joint venture agrees that, in the performance of the contract, the applicable percentage specified in paragraph (c) of this clause will be performed by the aggregate of the HUBZone small business participants.

(e)(1) When the total value of the contract exceeds $25,000, a HUBZone small business concern nonmanufacturer agrees to furnish in performing this contract only end items manufactured or produced by HUBZone small business concern manufacturers.

(2) When the total value of the contract is equal to or less than $25,000, a HUBZone small business concern nonmanufacturer may provide end items manufactured by other than a HUBZone small business concern manufacturer provided the end items are produced or manufactured in the United States.

(3) Paragraphs 1 and 2 do not apply in connection with construction or service contracts.

(f) Notice. If this solicitation has been set-aside for HUBZone small business concerns or the price evaluation preference for HUBZone small business concerns applies, the HUBZone small business offeror acknowledges the requirement that a prospective HUBZone awardee must be a HUBZone small business concern at the time of award of this contract. The HUBZone offeror shall provide the Contracting Officer a copy of the notice required by 13 CFR 126.501 if material changes occur before contract award that could affect its HUBZone eligibility. If the apparently successful HUBZone offeror is not a HUBZone small business concern at the time of award of this contract, the Contracting Officer will proceed to award to the next otherwise successful HUBZone small business concern or other offeror.

(End of Clause)

Alternate I (Date). As prescribed in 19.1309(a), substitute the following paragraphs (c)(3) and (c)(4) for paragraphs (c)(3) and (c)(4) of the basic clause:

(3) General construction, at least 15 percent of the cost of the contract performance incurred for personnel will be spent on the concern's employees; or

(4) Construction by special trade contractors, at least 25 percent of the cost of the contract performance incurred for personnel will be spent on the concern's employees.

25. Amend section 52.219–4 by—

a. Revising the prescription, date of the clause, and paragraph (a);

b. Adding paragraph (b)(4);

c. Removing from paragraph (c) ''paragraph (d) of'' and adding ''paragraphs (d) and (e) of'' in its place;

d. Revising paragraphs (d)(3), (d)(4), (e) and (f);

e. Adding paragraph (g) and Alternate I.

The revised and added text reads as follows:

52.219–4 Notice of Price Evaluation Preference for HUBZone Small Business Concerns.

As prescribed in 19.1309(b), insert the following clause:

NOTICE OF PRICE EVALUATION PREFERENCE FOR HUBZONE SMALL BUSINESS CONCERNS (DATE)

(a) *Definitions.* See 13 CFR 125.6(e) for definitions of terms used in paragraph (d).

(b) * * *

(4) When the two highest rated offerors are a HUBZone small business concern and a large business, and the evaluated offer of the HUBZone small business concern is equal to the evaluated offer of the large business after considering the price evaluation preference, award will be made to the HUBZone small business concern.

(d) * * *

(3) General construction, at least 50 percent of the cost of the contract performance incurred for personnel will be spent on the concern's employees or on a combination of the concern's employees and employees of HUBZone small business concern subcontractors. At least 15 percent of the cost of contract performance incurred for personnel will be spent on the concern's employees. No more than 50 percent of the cost of contract performance incurred for personnel will be subcontracted to concerns that are not HUBZone small business concerns; or

(4) Construction by special trade contractors, at least 50 percent of the cost of the contract performance incurred for personnel will be spent on the concern's employees or on a combination of the concern's employees and employees of HUBZone small business concern subcontractors. At least 25 percent of the cost of contract performance incurred for personnel will be spent on the concern's employees. No more than 50 percent of the cost of contract performance incurred for personnel will be subcontracted to concerns that are not HUBZone small business concerns.

(e) A HUBZone joint venture agrees that the aggregate of the HUBZone small business concerns to the joint venture, not each concern separately, will perform the applicable percentage of work requirements.

(f)(1) When the total value of the contract exceeds $25,000, a HUBZone small business concern nonmanufacturer agrees to furnish in performing this contract only end items manufactured or produced by HUBZone small business concern manufacturers.

(2) When the total value of the contract is equal to or less than $25,000, a HUBZone small business concern nonmanufacturer may provide end items manufactured by other than a HUBZone small business concern manufacturer provided the end items are produced or manufactured in the United States.

(3) Paragraphs 1 and 2 do not apply in connection with construction or service contracts.

(g) *Notice.* If this solicitation has been set aside for HUBZone small business concerns or the price evaluation preference for HUBZone small business concerns applies, the HUBZone small business offeror acknowledges the requirement that a prospective HUBZone awardee must be a HUBZone small business concern at the time of award of this contract. The HUBZone offeror shall provide the Contracting Officer a copy of the notice required by 13 CFR 126.501 if material changes occur before contract award that could affect its HUBZone eligibility. If the apparently successful HUBZone offeror is not a HUBZone small business concern at the time of award of this contract, the Contracting Officer will proceed to award to the next otherwise successful HUBZone small business concern or other offeror.

(End of Clause)

Alternate I (Date). As prescribed in 19.1309(b), substitute the following paragraphs (d)(3) and (d)(4) for paragraphs (d)(3) and (d)(4) of the basic clause:

(3) General construction, at least 15 percent of the cost of the contract performance incurred for personnel will be spent on the concern's employees; or

(4) Construction by special trade contractors, at least 25 percent of the cost of the contract performance incurred for personnel will be spent on the concern's employees.

26. Amend section 52.219–8 by revising the date of the clause and paragraph (d) to read as follows:

52.219–8 Utilization of Small Business Concerns.

* * * * *

UTILIZATION OF SMALL BUSINESS CONCERNS (DATE)

* * * * *

(d)(1) Contractors acting in good faith may rely on written representations by their subcontractors regarding their status as a small business concern, a veteran-owned small business concern, a service-disabled veteran-owned small business concern, a small disadvantaged business concern, or a women-owned small business concern.

(2) The Contractor shall confirm that a subcontractor representing itself as a HUBZone small business concern is certified by SBA as a HUBZone small business concern by accessing the Central Contractor Registration (CCR) database or by contacting the SBA. Options for contacting the SBA include—

(i) HUBZone web page at *http://dsbs.sba.gov/dsbs/dsp_searchhubzone.cfm*;

(ii) In writing to the—AA/HUB, U.S. Small Business Administration, 409 3rd Street, SW., Washington DC 20416; or

(iii) E-mail at *hubzone@sba.gov*.

(3) Upon determination of the successful subcontract offeror for a competitive subcontract, the Contractor must inform each unsuccessful subcontract offeror in writing of the name and location of the apparent successful offeror prior to award of the contract.

(End of clause)

52.244–6 [Amended]

27. Amend section 52.244–6 by removing from the clause heading ''(Dec 2008)'' and adding ''(Date)'' in its place; and by removing from paragraph (c)(1)(ii) ''(May 2004)'' and adding ''(Date)'' in its place.

[FR Doc. E9–8318 Filed 4–10–09; 8:45 am]

BILLING CODE 6820–EP–P

Notices

Federal Register
Vol. 74, No. 69
Monday, April 13, 2009

This section of the FEDERAL REGISTER contains documents other than rules or proposed rules that are applicable to the public. Notices of hearings and investigations, committee meetings, agency decisions and rulings, delegations of authority, filing of petitions and applications and agency statements of organization and functions are examples of documents appearing in this section.

DEPARTMENT OF AGRICULTURE

Submission for OMB Review; Comment Request

April 8, 2009.

The Department of Agriculture has submitted the following information collection requirement(s) to OMB for review and clearance under the Paperwork Reduction Act of 1995, Public Law 104–13. Comments regarding (a) Whether the collection of information is necessary for the proper performance of the functions of the agency, including whether the information will have practical utility; (b) the accuracy of the agency's estimate of burden including the validity of the methodology and assumptions used; (c) ways to enhance the quality, utility and clarity of the information to be collected; (d) ways to minimize the burden of the collection of information on those who are to respond, including through the use of appropriate automated, electronic, mechanical, or other technological collection techniques or other forms of information technology should be addressed to: Desk Officer for Agriculture, Office of Information and Regulatory Affairs, Office of Management and Budget (OMB), *OIRA_Submission@OMB.EOP.GOV* or fax (202) 395–5806 and to Departmental Clearance Office, USDA, OCIO, Mail Stop 7602, Washington, DC 20250–7602. Comments regarding these information collections are best assured of having their full effect if received within 30 days of this notification. Copies of the submission(s) may be obtained by calling (202) 720–8958.

An agency may not conduct or sponsor a collection of information unless the collection of information displays a currently valid OMB control number and the agency informs potential persons who are to respond to the collection of information that such persons are not required to respond to the collection of information unless it displays a currently valid OMB control number.

Food and Nutrition Service

Title: School Food Purchase Study—III.

OMB Control Number: 0584–0471.

Summary of Collection: To implement the requirements of Section 4307 of the Food, Conservation, and Energy Act of 2008 (Pub. L. 110–246), (H.R. 2419). The legislation directs the U.S. Department of Agriculture to carry out a nationally representative survey of the foods purchased by School Food Authorities (SFAs) during the most recent school year for which data is available. The study includes two separate components: (1) The collection of food purchase data from a sample of SFAs and (2) a survey of SFA food procurement practice. The results will contribute to better understanding of the purchasing behavior of the SFAs and to various factors that influence the efficiency of school meal provision.

Need and Use of the Information: The purpose of this data collection is to address five overall study objectives that will assist the Food and Nutrition Service and other USDA agencies involved in procurement and distribution of donated commodities and administering the National School Lunch Program and School Breakfast Program. In addition, the study will furnish the opportunity for schools to describe their food purchase practices so that information associated with food buying efficiency can be provided to other schools. If the study is not conducted, it would obstruct the agency's ability to measure the impact these changes are having on the costs of school meals and on child nutrition.

Description of Respondents: State, Local and Tribal Government.

Number of Respondents: 425.

Frequency of Responses: Reporting: On occasion.

Total Burden Hours: 5,313.

Ruth Brown,

Departmental Information Collection Clearance Officer.

[FR Doc. E9–8351 Filed 4–10–09; 8:45 am]

BILLING CODE 3410–30–P

DEPARTMENT OF AGRICULTURE

Rural Business—Cooperative Service

Inviting Applications for Rural Business Opportunity Grants

AGENCY: Rural Business—Cooperative Service, USDA.

ACTION: Notice to extend deadline date.

SUMMARY: The Rural Business—Cooperative Service (RBS) announces that the deadline for receipt of applications in the State Office has been extended to April 30, 2009.

SUPPLEMENTARY INFORMATON: RBS published a Notice of Funds Availability (NOFA) on March 12, 2009, stating a deadline of March 31, 2009, for applications for the Rural Business Opportunity Grant (RBOG) program. Due to the delay in publication of the NOFA in the **Federal Register**, this deadline does not allow potential applicants sufficient time to submit completed applications. Therefore, the deadline for receipt of applications in the respective Rural Development State Offices is extended to April 30, 2009, to allow applicants sufficient time to apply for and obtain leverage financing.

Dated: April 7, 2009.

Pat Fiala,

Acting Administrator, Rural Business—Cooperative Service.

[FR Doc. E9–8316 Filed 4–10–09; 8:45 am]

BILLING CODE 3410–XY–P

DEPARTMENT OF AGRICULTURE

Forest Service

Notice of Public Meeting, Davy Crockett National Forest Resource Advisory Committee

AGENCY: Forest Service, USDA.

ACTION: Notice of public meeting, Davy Crockett National Forest Resource Advisory Committee.

SUMMARY: In accordance with the Secure Rural Schools and Community Self Determination Act of 2000 (Pub. L. 106–393), [as reauthorized as part of Public Law 110–343] and the Federal Advisory Committee Act of 1972 (FACA), the U.S. Department of Agriculture, Forest Service, Davy Crockett National Forest Resource Advisory Committee (RAC) meeting will meet as indicated below.

DATES: The Davy Crockett National Forest RAC meeting will be held on April 30, 2009.

ADDRESSES: The Davy Crockett National Forest RAC meeting will be held at the Davy Crockett Ranger Station located on State Highway 7, approximately one-quarter mile West of FM 227 in Houston County, Texas. The meeting will begin at 6 p.m. and adjourn at approximately 8 p.m. A public comment period will begin at 7:45 p.m.

FOR FURTHER INFORMATION CONTACT: Gerald Lawrence, Jr., Designated Federal Officer, Davy Crockett National Forest, 18551 State Hwy. 7 E., Kennard, TX 75847: Telephone: 936–655–2299 ext. 225 or e-mail at: *glawrence@fs.fed.us*.

SUPPLEMENTARY INFORMATION: The Davy Crockett National Forest RAC proposes projects and funding to the Secretary of Agriculture under Section 203 of the Secure Rural Schools and Community Self Determination Act of 2000, (as reauthorized as part of Public Law 110–343). The purpose of the April 30, 2009 meeting is to discuss and vote on new project proposals. A presentation on stewardship contracts will be presented by Forest Service personnel. These meetings are open to the public. The public may present written comments to the RAC. Each formal RAC meeting will also have time, as identified above, persons wishing to comment and time available, the time for individual oral comments may be limited.

Gerald Lawrence, Jr.,

Designated Federal Officer, Davy Crockett National Forest RAC.

[FR Doc. E9–8193 Filed 4–10–09; 8:45 am]

BILLING CODE 3410–11–M

DEPARTMENT OF AGRICULTURE

Forest Service

Tehama County Resource Advisory Committee

AGENCY: Forest Service, USDA.

ACTION: Notice of meeting.

SUMMARY: The Tehama County Resource Advisory Committee (RAC) will meet in Red Bluff, California. Agenda items to be covered include: (1) Introductions, (2) Approval of Minutes, (3) Public Comment, (4) Chairman's Perspective, (5) Project Proposal Presentations, (6) Vote on Projects if time permits, (7) Next Agenda.

DATES: The meeting will be held on April 16, 2009 from 9 a.m. and end at approximately 12 p.m.

ADDRESSES: The meeting will be held at the Lincoln Street School, Pine Room, 1135 Lincoln Street, Red Bluff, CA. Individuals wishing to speak or propose agenda items must send their names and proposals to Randy Jero, Committee Coordinator, 825 N. Humboldt Ave., Willows, CA 95988.

FOR FURTHER INFORMATION CONTACT: Randy Jero, Committee Coordinator, USDA, Mendocino National Forest, Grindstone Ranger District, 825 N. Humboldt Ave., Willows, CA 95988. (530) 934–3316; E-mail *rjero@fed.us*.

SUPPLEMENTARY INFORMATION: The meeting is open to the public. Committee discussion is limited to Forest Service staff and Committee members. However, persons who wish to bring matters to the attention of the Committee may file written statements with the Committee staff before or after the meeting. Public input sessions will be provided and individuals who made written requests by April 13, 2009 will have the opportunity to address the Committee at those sessions.

Dated: April 6, 2009.

Eduardo Olmedo,

Designated Federal Official.

[FR Doc. E9–8242 Filed 4–10–09; 8:45 am]

BILLING CODE 3410–11–M

DEPARTMENT OF AGRICULTURE

Forest Service

Alpine County Resource Advisory Committee (RAC)

AGENCY: Forest Service, USDA.

ACTION: Notice of meeting.

SUMMARY: The Alpine County Resource Advisory Committee (RAC) will hold its first meeting.

DATES: The meeting will be held on April 23, 2009, and will begin at 6 p.m. The meeting will be held in Alpine County at Turtle Rock Park Community Center, 17300 State Route 89 Markleeville, CA 96120.

FOR FURTHER INFORMATION CONTACT: Marnie Bonesteel, RAC Coordinator, USDA, Humboldt-Toiyabe National Forest, Carson Ranger District, 1536 S. Carson Street, Carson City, NV 89701 (775) 884–8140; e-mail *mbonesteel@fs.fed.us*.

SUPPLEMENTARY INFORMATION: Agenda items to be covered include: (1) Introductions of committee members and Forest Service personnel. (2) Review legislation and re-authorization of the Secure Rule Schools and Community Self-Determination Act. (3) Review vacancies on the committee and process for recruiting and filling vacancies. (4) Receive materials explaining the process for considering and recommending Title II projects. (5) Public Comment. The meeting is open to the public. Public input opportunity will be provided and individuals will have the opportunity to address the Committee at that time.

Dated: March 26, 2009.

Genny E. Wilson,

Designated Federal Officer.

[FR Doc. E9–8124 Filed 4–10–09; 8:45 am]

BILLING CODE 3410–11–M

DEPARTMENT OF AGRICULTURE

Forest Service

Newspapers Used for Publication of Legal Notices in the Southwestern Region, Which Includes Arizona, New Mexico, and Parts of Oklahoma and Texas

AGENCY: Forest Service, USDA.

ACTION: Notice.

SUMMARY: This notice lists the newspapers that will be used by all Ranger Districts, Grasslands, Forests, and the Regional Office of the Southwestern Region to give legal notice for the availability for comments on projects under 36 CFR part 215, notice of decisions that may be subject to administrative appeal under 36 CFR parts 215 or Optional Appeal Procedures Available During the Planning Rule Transition Period (formerly 36 CFR part 217), and for opportunities to object to proposed authorized hazardous fuel reduction projects under 36 CFR 218.4. This notice also lists newspapers of record for notices pertaining to plan amendments and revisions under 36 CFR part 219. Newspaper publication is in addition to mailings and direct notice made to those who have participated in the planning of projects or plan revisions and amendments by submitting comments and/or requesting notice.

DATES: Use of these newspapers for the purpose of publishing legal notice for a plan amendment decision that is subject to appeal under ''Optional Appeal Procedures Available During the Planning Rule Transition Period'' (formerly 36 CFR part 217), for a comment and project decision that may be subject to appeal under 36 CFR part 215, for opportunity to object under 36 CFR part 218, and for planning notices on a plan revision or plan amendment under 36 CFR part 219 shall begin on the date of this publication and continue until further notice.

ADDRESSES: Southwestern Region, ATTN: Regional Appeals Assistant, 333 Broadway, SE., Albuquerque, NM 87102–3498.

FOR FURTHER INFORMATION CONTACT: Connie Smith, 505–842–3223.

SUPPLEMENTARY INFORMATION: Where more than one newspaper is listed for any unit, the first newspaper listed is the primary newspaper of record of which publication date shall be used for calculating the time period to file comment, appeal or an objection.

Southwestern Regional Office

Regional Forester

Notices of Availability for Comment and Decisions and Objections affecting New Mexico Forests:—''Albuquerque Journal'', Albuquerque, New Mexico, for National Forest System Lands in the State of New Mexico and for any projects of Region-wide impact. Regional Forester Notices of Availability for Comment and Decisions and Objections affecting Arizona Forests:—''The Arizona Republic'', Phoenix, Arizona, for National Forest System lands in the State of Arizona and for any projects of Region-wide impact. Regional Forester Notices of Availability for Comment and Decisions and Objections affecting National Grasslands in New Mexico, Oklahoma, and Texas are listed by Grassland and location as follows: Kiowa National Grassland notices published in:—''Union County Leader'', Clayton, New Mexico. Rita Blanca National Grassland in Cimarron County, Oklahoma notices published in:—''Boise City News'', Boise City, Oklahoma. Rita Blanca National Grassland in Dallam County, Texas notices published in:—''The Dalhart Texan'', Dalhart, Texas. Black Kettle National Grassland in Roger Mills County, Oklahoma notices published in:—''Cheyenne Star'', Cheyenne, Oklahoma. Black Kettle National Grassland in Hemphill County, Texas notices published in:—''The Canadian Record'', Canadian, Texas. McClellan Creek National Grassland in Gray County, Texas notices published in:—''The Pampa News'', Pampa, Texas.

Arizona National Forests

Apache-Sitgreaves National Forests

Notices for Availability for Comments, Decisions and Objections by Forest Supervisor, Alpine Ranger District, Black Mesa Ranger District, Lakeside Ranger District, and Springerville Ranger District are published in:—''The White Mountain Independent'', Show Low and Navajo County, Arizona.

Clifton Ranger District Notices are published in:—''Copper Era'', Clifton, Arizona.

Coconino National Forest

Notices for Availability for Comments, Decisions and Objections by Forest Supervisor, Mogollon Rim Ranger District, Mormon Lake Ranger District, and Peaks Ranger District are published in:—''Arizona Daily Sun'', Flagstaff, Arizona.

Red Rock Ranger District Notices are published in:—''Red Rock News'', Sedona, Arizona.

Coronado National Forest

Notices for Availability for Comments, Decisions and Objections by Forest Supervisor and Santa Catalina Ranger District are published in:—''The Arizona Daily Star'', Tucson, Arizona.

Douglas Ranger District Notices are published in:—''Daily Dispatch'', Douglas, Arizona.

Nogales Ranger District Notices are published in:—''Nogales International'', Nogales, Arizona.

Sierra Vista Ranger District Notices are published in:—''Sierra Vista Herald'', Sierra Vista, Arizona.

Safford Ranger District Notices are published in:—''Eastern Arizona Courier'', Safford, Arizona.

Kaibab National Forest

Notices for Availability for Comments, Decisions and Objections by Forest Supervisor, North Kaibab Ranger District, Tusayan Ranger District, and Williams Ranger District Notices are published in:—''Arizona Daily Sun'', Flagstaff, Arizona.

Prescott National Forest

Notices for Availability for Comments, Decisions and Objections by Forest Supervisor, Bradshaw Ranger District, Chino Valley Ranger District and Verde Ranger District are published in:—''Daily Courier'', Prescott, Arizona.

Tonto National Forest

Notices for Availability for Comments, Decisions, and Objections by Forest Supervisor are published in:—''Arizona Capitol Times'', in Phoenix, Arizona.

Cave Creek Ranger District Notices are published in:—''Arizona Capitol Times'', in Phoenix, Arizona.

Globe Ranger District Notices are published in:—''Arizona Silver Belt'', Globe, Arizona.

Mesa Ranger District Notices are published in:—''Arizona Capitol Times'', in Phoenix, Arizona.

Payson Ranger District, Pleasant Valley Ranger District and Tonto Basin Ranger District Notices are published in:—''Payson Roundup'', Payson, Arizona.

New Mexico National Forests

Carson National Forest

Notices for Availability for Comments, Decisions and Objections by Forest Supervisor, Camino Real Ranger District, Tres Piedras Ranger District and Questa Ranger District are published in:—''The Taos News'', Taos, New Mexico.

Canjilon Ranger District and El Rito Ranger District Notices are published in:—''Rio Grande Sun'', Espanola, New Mexico.

Jicarilla Ranger District Notices are published in:—''Farmington Daily Times'', Farmington, New Mexico.

Cibola National Forest and National Grasslands

Notices for Availability for Comments, Decisions and Objections by Forest Supervisor affecting lands in New Mexico, except the National Grasslands are published in:—''Albuquerque Journal'', Albuquerque, New Mexico.

Forest Supervisor Notices affecting National Grasslands in New Mexico, Oklahoma and Texas are published by grassland and location as follows: Kiowa National Grassland in Colfax, Harding, Mora and Union Counties, New Mexico published in:—''Union County Leader'', Clayton, New Mexico. Rita Blanca National Grassland in Cimarron County, Oklahoma published in:—''Boise City News'', Boise City, Oklahoma. Rita Blanca National Grassland in Dallam County, Texas published in:—''The Dalhart Texan'', Dalhart, Texas. Black Kettle National Grassland, in Roger Mills County, Oklahoma published in:—''Cheyenne Star'', Cheyenne, Oklahoma. Black Kettle National Grassland, in Hemphill County, Texas published in:—''The Canadian Record'', Canadian, Texas. McClellan Creek National Grassland published in:—''The Pampa News'', Pampa, Texas.

Mt. Taylor Ranger District Notices are published in:—''Cibola County Beacon'', Grants, New Mexico.

Magdalena Ranger District Notices are published in:—''Defensor-Chieftain'', Socorro, New Mexico.

Mountainair Ranger District Notices are published in:—''Mountain View Telegraph'', Moriarity, New Mexico.

Sandia Ranger District Notices are published in:—''Albuquerque Journal'', Albuquerque, New Mexico.

Kiowa National Grassland Notices are published in:—''Union County Leader'', Clayton, New Mexico.

Rita Blanca National Grassland Notices in Cimarron County, Oklahoma are published in:—''Boise City News'', Boise City, Oklahoma while Rita Blanca National Grassland Notices in Dallam County, Texas are published in:—''Dalhart Texan'', Dalhart, Texas.

Black Kettle National Grassland Notices in Roger Mills County, Oklahoma are published in:—''Cheyenne Star'', Cheyenne, Oklahoma, while Black Kettle National Grassland Notices in Hemphill County, Texas are published in:—''The Canadian Record'', Canadian, Texas.

McClellan Creek National Grassland Notices are published in:—''The Pampa News'', Pampa, Texas.

Gila National Forest

Notices for Availability for Comments, Decisions and Objections by Forest Supervisor, Quemado Ranger District, Reserve Ranger District, Glenwood Ranger District, Silver City Ranger District and Wilderness Ranger District are published in:—''Silver City Daily Press'', Silver City, New Mexico.

Black Range Ranger District Notices are published in:—''The Herald'', Truth or Consequences, New Mexico.

Lincoln National Forest

Notices for Availability for Comments, Decisions and Objections by Forest Supervisor and the Sacramento Ranger District are published in:—''Alamogordo Daily News'', Alamogordo, New Mexico.

Guadalupe Ranger District Notices are published in:—''Carlsbad Current Argus'', Carlsbad, New Mexico.

Smokey Bear Ranger District Notices are published in—''Ruidoso News'', Ruidoso, New Mexico.

Santa Fe National Forest

Notices for Availability for Comments, Decisions and Objections by Forest Supervisor, Coyote Ranger District, Cuba Ranger District, Espanola Ranger District, Jemez Ranger District and Pecos-Las Vegas Ranger District are published in:—''Albuquerque Journal'', Albuquerque, New Mexico.

Dated: April 1, 2009.

Faye Krueger,

Deputy Regional Forester, Southwestern Region.

[FR Doc. E9–8194 Filed 4–10–09; 8:45 am]

BILLING CODE 3410–11–M

DEPARTMENT OF COMMERCE

Census Bureau

Proposed Information Collection; Comment Request; Advance Monthly Retail Trade Survey

AGENCY: U.S. Census Bureau, Commerce.

ACTION: Notice.

SUMMARY: The Department of Commerce, as part of its continuing effort to reduce paperwork and respondent burden, invites the general public and other Federal agencies to take this opportunity to comment on proposed and/or continuing information collections, as required by the Paperwork Reduction Act of 1995, Pub. L. 104–13 (44 U.S.C. 3506(c)(2)(A)).

DATES: To ensure consideration, written comments must be submitted on or before June 12, 2009.

ADDRESSES: Direct all written comments to Diana Hynek, Departmental Paperwork Clearance Officer, Department of Commerce, Room 7845, 14th and Constitution Avenue, NW., Washington, DC 20230 (or via the Internet at *dHynek@doc.gov*).

FOR FURTHER INFORMATION CONTACT: Requests for additional information or copies of the information collection instrument(s) and instructions should be directed to: Timothy Winters, U.S. Census Bureau, SSSD HQ–8K181, 4600 Silver Hill Road, Washington, DC 20233–6500, (301) 763–7130.

SUPPLEMENTARY INFORMATION:

I. Abstract

The Advance Monthly Retail Trade Survey (MARTS) provides an early indication of monthly retail sales at the United States level. MARTS also provides estimates of monthly sales of food service establishments and drinking places. The Bureau of Economic Analysis (BEA) uses the data as critical inputs to the calculation of Gross Domestic Product (GDP). Policymakers such as the Federal Reserve Board need to have the timeliest estimates in order to anticipate economic trends and act accordingly. The Council of Economic Advisors (CEA) and other government agencies and businesses use the data to formulate economic policy and make decisions. These estimates have a high BEA priority because of their timeliness. There would be approximately a one-month delay in the availability of these data if the survey were not conducted. Data are collected monthly from small-size, medium-size, and large-size businesses, which are selected using a stratified random sampling procedure. The MARTS sample is re-selected periodically, generally at two to three year intervals. Small-size and medium-size retailers are requested to participate for those two or three years, after which they are replaced with new panel respondents. Smaller firms have less of a chance for selection due to our sampling procedure. Firms canvassed in this survey are not required to maintain additional records and carefully prepared estimates are acceptable if book figures are not available. There is no change in response burden.

II. Method of Collection

The Census Bureau will collect this information by mail, FAX, and telephone follow-up.

III. Data

OMB Control Number: 0607–0104.

Form Number: SM–44(06)A, SM–44(06)AE, SM–44(06)AS, and SM–72(06)A.

Type of Review: Regular Submission.

Affected Public: Retail and Food Services firms in the United States.

Estimated Number of Respondents: 4,500.

Estimated Time per Response: 5 minutes.

Estimated Total Annual Burden Hours: 4,500.

Estimated Total Annual Cost: $136,665.

Respondent's Obligation: Voluntary.

Legal Authority: Title 13, United States Code, Section 182.

IV. Request for Comments

Comments are invited on: (a) Whether the proposed collection of information is necessary for the proper performance of the functions of the agency, including whether the information shall have practical utility; (b) the accuracy of the agency's estimate of the burden (including hours and cost) of the proposed collection of information; (c) ways to enhance the quality, utility, and clarity of the information to be collected; and (d) ways to minimize the burden of the collection of information on respondents, including through the use of automated collection techniques or other forms of information technology.

Comments submitted in response to this notice will be summarized and/or included in the request for OMB approval of this information collection; they also will become a matter of public record.

Dated: April 8, 2009.

Glenna Mickelson,

Management Analyst, Office of the Chief Information Officer.

[FR Doc. E9–8356 Filed 4–10–09; 8:45 am]

BILLING CODE 3510–07–P

DEPARTMENT OF COMMERCE

International Trade Administration

A–570–890

Wooden Bedroom Furniture From the People's Republic of China: Amended Notice of Partial Rescission of Antidumping Duty Administrative Review

AGENCY: Import Administration, International Trade Administration, Department of Commerce.

SUMMARY: On March 7, 2008, the Department of Commerce (''the Department'') initiated the third administrative review of the antidumping duty order on wooden bedroom furniture from the People's Republic of China (''PRC'') covering the period January 1, 2007, through December 31, 2007. *See Notice of Initiation of Administrative Review of the Antidumping Duty Order on Wooden Bedroom Furniture from the People's Republic of China*, 73 FR 12387 (March 7, 2008) (''*Initiation Notice*''). Between March 7 and June 5, 2008, several parties withdrew their requests for review. As a result, the Department rescinded the administrative review of wooden bedroom furniture with respect to the entities for whom all review requests have been withdrawn. *See Wooden Bedroom Furniture from the People's Republic of China: Notice of Partial Rescission of Antidumping Duty Administrative Review*, 73 FR 49990 (August 25, 2008) (''*Rescission Notice*''). However, in the *Rescission Notice*, the Department inadvertently failed to identify Nantong Dongfang Oriental Furniture Co., Ltd. (''Nantong Dongfang'') as a company for which the review was being rescinded, and instead listed it as a company receiving the PRC–wide rate, even though it has established a separate rate. *See Rescission Notice*, 73 FR at 49993; *Notice of Amended Final Determination of Sales at Less Than Fair Value and Antidumping Duty Order: Wooden Bedroom Furniture from the People's Republic of China*, 70 FR 329, 331 (January 4, 2005) (''WBF Order''). Therefore, we are correcting this error and rescinding the review with respect to Nantong Dongfang.

EFFECTIVE DATE: April 13, 2009.

FOR FURTHER INFORMATION CONTACT: Paul Stolz, AD/CVD Operations, Office 8, Import Administration, International Trade Administration, U.S. Department of Commerce, 14th Street and Constitution Avenue, NW, Washington, DC 20230; telephone: (202) 482–4474.

SUPPLEMENTARY INFORMATION:

Partial Rescission of Review

The Department partially rescinded the review pursuant to 19 CFR 351.213(d)(1) with respect to a number of companies because all requests for review covering those companies were withdrawn within 90 days of the date of publication of the notice of initiation. *See Rescission Notice*, 73 FR at 49991. However, instead of rescinding the review with respect to Nangtong Dongfang, the Department inadvertently listed Nantong Dongfang as part of the PRC–entity, subject to the PRC–wide rate. *See Rescission Notice*, 73 FR at 49993. Because Nantong Dongfang has a separate rate (*see WBF Order*, 70 FR at 331), we are correcting the *Rescission Notice* to rescind the review with respect to Nantong Dongfang.

Assessment

The Department will instruct U.S. Customs and Border Protection (''CBP'') to assess antidumping duties on all appropriate entries for the above–named entity. For Nantong Dongfang, antidumping duties shall be assessed at rates equal to the cash deposit of estimated antidumping duties required at the time of entry, or withdrawal from warehouse, for consumption, in accordance with 19 CFR 351.212(c)(1)(i). The Department will issue appropriate assessment instructions directly to CBP 15 days after the publication of this notice in the **Federal Register**.

Notification to Importers

This notice serves as a final reminder to importers of their responsibility under 19 CFR 351.402(f) to file a certificate regarding the reimbursement of antidumping duties prior to liquidation of the relevant entries during this review period. Failure to comply with this requirement could result in the Secretary's assumption that reimbursement of antidumping duties occurred and subsequent assessment of double antidumping duties.

Notification Regarding Administrative Protective Orders (''APOs'')

This notice also serves as a reminder to parties subject to APOs of their responsibility concerning the return or destruction of proprietary information disclosed under an APO in accordance with 19 CFR 351.305, which continues to govern business proprietary information in this segment of the proceeding. Timely written notification of the return/destruction of APO materials or conversion to judicial protective order is hereby requested. Failure to comply with the regulations and terms of an APO is a violation which is subject to sanction.

This notice is in accordance with section 777(i)(1) of the Tariff Act of 1930, as amended, and 19 CFR 351.213(d)(4).

Dated: March 27, 2009.

John M. Andersen,

Acting Deputy Assistant Secretary for Antidumping and Countervailing Duty Operations.

[FR Doc. E9–8382 Filed 4–10–09; 8:45 am]

BILLING CODE 3510–DS–S

DEPARTMENT OF COMMERCE

International Trade Administration

A–588–861, A–580–850, A–570–879

Polyvinyl Alcohol from Japan, the Republic of Korea and the People's Republic of China: Continuation of Antidumping Duty Orders

AGENCY: Import Administration, International Trade Administration, Department of Commerce.

SUMMARY: As a result of the determinations by the Department of Commerce (the Department) and the International Trade Commission (ITC) that revocation of the antidumping duty orders on polyvinyl alcohol (PVA) from Japan, the Republic of Korea (Korea), and the People's Republic of China (PRC) would likely lead to continuation or recurrence of dumping and material injury to an industry in the United States, the Department is publishing notice of continuation of these antidumping duty orders.

EFFECTIVE DATE: April 13, 2009.

FOR FURTHER INFORMATION CONTACT: Elizabeth Eastwood, AD/CVD Operations, Import Administration, International Trade Administration, U.S. Department of Commerce, 14th Street & Constitution Avenue, NW, Washington, DC 20230; telephone:(202) 482–3874.

SUPPLEMENTARY INFORMATION:

Background

In June 2008, the Department initiated and the ITC instituted sunset reviews of the antidumping duty orders on PVA from Japan, Korea, and the PRC

pursuant to section 751(c) of the Tariff Act of 1930, as amended (the Act).[1]

As a result of its reviews, the Department found that revocation of the antidumping duty orders would likely lead to continuation or recurrence of dumping, and it notified the ITC of the magnitude of the margins likely to prevail were the orders to be revoked.[2] On April 2, 2009, the ITC published its determination, pursuant to section 751(c) of the Act, that revocation of the antidumping duty orders on PVA from Japan, Korea, and the PRC would likely lead to continuation or recurrence of material injury to an industry in the United States within a reasonably foreseeable time.[3]

Scope of the Orders

The merchandise covered by these orders is PVA. This product consists of all PVA hydrolyzed in excess of 80 percent, whether or not mixed or diluted with commercial levels of defoamer or boric acid, except as noted below.

The following products are specifically excluded from the scope of these orders:

1) PVA in fiber form.

2) PVA with hydrolysis less than 83 mole percent and certified not for use in the production of textiles.

3) PVA with hydrolysis greater than 85 percent and viscosity greater than or equal to 90 cps.

4) PVA with a hydrolysis greater than 85 percent, viscosity greater than or equal to 80 cps but less than 90 cps, certified for use in an ink jet application.

5) PVA for use in the manufacture of an excipient or as an excipient in the manufacture of film coating systems which are components of a drug or dietary supplement, and accompanied by an end–use certification.

6) PVA covalently bonded with cationic monomer uniformly present on all polymer chains in a concentration equal to or greater than one mole percent.

7) PVA covalently bonded with carboxylic acid uniformly present on all polymer chains in a concentration equal to or greater than two mole percent, certified for use in a paper application.

8) PVA covalently bonded with thiol uniformly present on all polymer chains, certified for use in emulsion polymerization of non–vinyl acetic material.

9) PVA covalently bonded with paraffin uniformly present on all polymer chains in a concentration equal to or greater than one mole percent.

10) PVA covalently bonded with silan uniformly present on all polymer chains certified for use in paper coating applications.

11) PVA covalently bonded with sulfonic acid uniformly present on all polymer chains in a concentration level equal to or greater than one mole percent.

12) PVA covalently bonded with acetoacetylate uniformly present on all polymer chains in a concentration level equal to or greater than one mole percent.

13) PVA covalently bonded with polyethylene oxide uniformly present on all polymer chains in a concentration level equal to or greater than one mole percent.

14) PVA covalently bonded with quaternary amine uniformly present on all polymer chains in a concentration level equal to or greater than one mole percent.

15) PVA covalently bonded with diacetoneacrylamide uniformly present on all polymer chains in a concentration level greater than three mole percent, certified for use in a paper application.

The merchandise subject to these orders is currently classifiable under subheading 3905.30.00 of the Harmonized Tariff Schedule of the United States (HTSUS). Although the HTSUS subheading is provided for convenience and customs purposes, the written description of the scope of these orders is dispositive.

Determination

As a result of the determinations by the Department and the ITC that revocation of these antidumping duty orders would likely lead to continuation or recurrence of dumping and material injury to an industry in the United States, pursuant to section 751(d)(2) of the Act, the Department hereby orders the continuation of the antidumping duty orders on PVA from Japan, Korea, and the PRC. Therefore, U.S. Customs and Border Protection will continue to collect antidumping duty cash deposits at the rates in effect at the time of entry for all imports of subject merchandise.

The effective date of continuation of these orders will be the date of publication in the **Federal Register** of this Notice of Continuation. Pursuant to sections 751(c)(2) and 751(c)(6)(A) of the Act, the Department intends to initiate the next five-year review of these orders not later than March 2014.

This five–year (sunset) review and this notice are in accordance with section 751(c) of the Act and published pursuant to section 777(i) of the Act.

Dated: April 6, 2009.

John M. Andersen,

Acting Deputy Assistant Secretary for Antidumping and Countervailing Duty Operations.

[FR Doc. E9–8384 Filed 4–10–09; 8:45 am]

BILLING CODE 3510–DS–S

[1] *See Initiation of Five–year ("Sunset") Reviews, 73 FR 31974 (June 5, 2008); and Institution of Five–year Reviews Concerning the Antidumping Duty Orders on Polyvinyl Alcohol from China, Japan, and Korea*, 73 FR 31507 (June 2, 2008).

[2] *See Polyvinyl Alcohol from Japan, the Republic of Korea, and the People's Republic of China: Final Results of the Expedited Sunset Reviews of the Antidumping Duty Orders*, 73 FR 57596 (October 3, 2008).

[3] *See Polyvinyl Alcohol from China, Japan, and Korea; Determination*, 74 FR 14999 (April 2, 2009).

DEPARTMENT OF COMMERCE

International Trade Administration

Application(s) for Duty-Free Entry of Scientific Instruments

Pursuant to Section 6(c) of the Educational, Scientific and Cultural Materials Importation Act of 1966 (Pub. L. 89–651, as amended by Pub. L. 106–36; 80 Stat. 897; 15 CFR part 301), we invite comments on the question of whether instruments of equivalent scientific value, for the purposes for which the instruments shown below are intended to be used, are being manufactured in the United States.

Comments must comply with 15 CFR 301.5(a)(3) and (4) of the regulations and be postmarked on or before May 4, 2009. Address written comments to Statutory Import Programs Staff, Room 3720, U.S. Department of Commerce, Washington, D.C. 20230. Applications may be examined between 8:30 A.M. and 5:00 P.M. at the U.S. Department of Commerce in Room 3720.

Docket Number: 09–008. Applicant: National Institute of Standards and Technology, 100 Bureau Drive, Gaithersburg, MD 20899. Instrument: Electron Microscope. Manufacturer: FEI Company, the Netherlands. Intended Use: The instrument will be used to study the compositional characterization of complex, compositionally heterogeneous materials at the sub–nanometer scale. This includes materials such as advanced on–chip interconnects, semiconductor nanowires and thin film and other nano–structured materials. Justification for Duty–Free Entry: No instruments of the same general category as the foreign instrument begin manufactured in the United States. Application accepted by Commissioner of Customs: March 17, 2009.

Dated: April 6, 2009.

Christopher Cassel,

Acting Director, IA Subsidies Enforcement Office.

[FR Doc. E9–8396 Filed 4–10–09; 8:45 am]

BILLING CODE: 3510–DS–S

DEPARTMENT OF COMMERCE

International Trade Administration

California Association for Research in Astronomy dba W.M. Keck Observatory, Notice of Decision on Applications for Duty–Free Entry of Scientific Instruments

This is a decision pursuant to Section 6(c) of the Educational, Scientific, and Cultural Materials Importation Act of 1966 (Pub. L. 89–651, as amended by Pub. .106–36; 80 Stat. 897; 15 CFR part 301). Related records can be viewed between 8:30 A.M. and 5:00 P.M. in Room 3705, U.S. Department of Commerce, 14th and Constitution Ave, NW, Washington, D.C.

Comments: None received. Decision: Approved. We know of no instruments of equivalent scientific value to the foreign instruments described below, for such purposes as this is intended to be used, that was being manufactured in the United States at the time of its order.

Docket Number: 08–061. Applicant: California Association for Research in Astronomy dba W.M. Keck Observatory, Kamuela, HI 96743. Instrument: Laser Launch Telescope Assembly (LTA). Manufacturer: Galileo Avionica, Italy. Intended Use: See notice at 74 FR 9219, March 3, 2009.

Reasons: This laser launch telescope assembly (LTA) has stringent technical requirements in regard to optical qualities, size, weight, and laser power capabilities than standard telescope designs that are used for viewing versus projection of a laser beam. Unique features of this LTA include: 1)it is able to handle the laser power of 20 watts of 589 nanometer light and throughput requirements, 2) it has a temperature range of -10 degrees C to 10 degrees C, and 3) it is able to meet those requirements while the unit is moved from 0 to 70 degrees zenith angle.

Dated: April 7, 2009.

Christopher Cassel,

Acting Director, Subsidies Enforcement Office, Import Administration.

[FR Doc. E9–8389 Filed 4–10–09; 8:45 am]

BILLING CODE: 3510–DS–S

DEPARTMENT OF COMMERCE

International Trade Administration

(C–570–938)

Citric Acid and Certain Citrate Salts From the People's Republic of China: Final Affirmative Countervailing Duty Determination

AGENCY: Import Administration, International Trade Administration, Department of Commerce.

SUMMARY: The Department of Commerce (''Department'') has determined that countervailable subsidies are being provided to producers and exporters of citric acid and certain citrate salts (''citric acid'') from the People's Republic of China (''PRC''). For information on the estimated countervailing duty rates, please see the ''Suspension of Liquidation'' section, below.

EFFECTIVE DATE: April 13, 2009.

FOR FURTHER INFORMATION CONTACT: David Neubacher, Shelly Atkinson or Damian Felton, AD/CVD Operations, Office 1, Import Administration, International Trade Administration, U.S. Department of Commerce, 14th Street and Constitution Avenue, NW, Washington, DC 20230; telephone: (202) 482–5823, (202) 482–0116 or (202) 482–0133, respectively.

SUPPLEMENTARY INFORMATION:

Petitioners

The petitioners in this investigation are Archer Daniels Midland Company, Cargill, Incorporated, and Tate & Lyle America, Inc. (collectively, ''Petitioners'').

Period of Investigation

The period for which we are measuring subsidies, or period of investigation, is January 1, 2007, through December 31, 2007.

Case History

The following events have occurred since the announcement of the preliminary determination, which was published in the **Federal Register** on September 19, 2008. *See Citric Acid and Certain Citrate Salts From the People's Republic of China: Preliminary Affirmative Countervailing Duty Determination and Alignment of Final Countervailing Duty Determination With Final Antidumping Duty Determination*, 73 FR 54367 (September 19, 2008) (''*Preliminary Determination*'').

The Department issued several supplemental questionnaires to the Government of the People's Republic of China (''GOC''), TTCA Co., Ltd. (formerly Shandong TTCA Biochemical Co., Ltd.) (''TTCA'') and Yixing Union Biochemical Co. Ltd. (''Yixing Union'') and its cross–owned affiliate Yixing Union Cogeneration Co., Ltd., and received responses in September and October 2008.

Public versions of the questionnaires and responses, as well as the various memoranda cited below are available at the Department's Central Records Unit (Room 1117 in the HCHB Building) (hereafter referred to as ''CRU'').

On September 12, 2008, the Department determined to investigate certain subsidies alleged by Petitioners in their submission of August 8, 2008. See Memorandum to Susan Kuhbach, Senior Director, Office 1, entitled ''Analysis of Petitioners' New Subsidy Allegations'' (September 12, 2008). On October 1, 2008, the Department issued questionnaires to the GOC, TTCA and Yixing Union regarding these new subsidy allegations. We received responses to these questionnaires as well as to supplemental questionnaires regarding the newly alleged submissions in October 2008.

On October 20, 2008, the Department initiated an investigation of TTCA's creditworthiness for the years 2004, 2006 and 2007, pursuant to 19 CFR 351.505(a)(6). *See* Memorandum to Susan H. Kuhbach, Senior Director, Office 1, entitled ''Uncreditworthy Allegation for TTCA'' (October 20, 2008). On February 25, 2009, we issued our preliminary determination that TTCA was uncreditworthy for the years investigated. *See* Memorandum to Susan H. Kuhbach, Senior Office Director, AD/CVD Operations, Office 1, entitled ''Preliminary Creditworthiness Determination for TTCA Co., Ltd.'' (February 25, 2009).

From November 1 through November 20, 2008, we conducted verification of the questionnaire responses submitted by the GOC, TTCA and Yixing Union.

On March 4, 2009, we issued our post–preliminary determination regarding the new subsidy allegations and certain other programs discovered in the course of the investigation. *See* Memorandum to Ronald K. Lorentzen, Acting Assistant Secretary for Import Administration, entitled ''Post–Preliminary Findings for the New Subsidy Allegations'' (March 4, 2009).

We received case briefs from the GOC and Yixing Union on March 12, 2009, and from Petitioners and TTCA on March 13, 2009. The same parties submitted rebuttal briefs on March 18 and 19, 2009, respectively.

Scope of the Investigation

The scope of this investigation includes all grades and granulation sizes of citric acid, sodium citrate, and potassium citrate in their unblended forms, whether dry or in solution, and regardless of packaging type. The scope also includes blends of citric acid, sodium citrate, and potassium citrate; as well as blends with other ingredients, such as sugar, where the unblended form(s) of citric acid, sodium citrate, and potassium citrate constitute 40 percent or more, by weight, of the blend. The scope of this investigation also includes all forms of crude calcium citrate, including dicalcium citrate monohydrate, and tricalcium citrate tetrahydrate, which are intermediate products in the production of citric acid, sodium citrate, and potassium citrate. The scope of this investigation does not include calcium citrate that satisfies the standards set forth in the United States Pharmacopeia and has been mixed with a functional excipient, such as dextrose or starch, where the excipient constitutes at least 2 percent, by weight, of the product. The scope of this investigation includes the hydrous and anhydrous forms of citric acid, the dihydrate and anhydrous forms of sodium citrate, otherwise known as citric acid sodium salt, and the monohydrate and monopotassium forms of potassium citrate. Sodium citrate also includes both trisodium citrate and monosodium citrate, which are also known as citric acid trisodium salt and citric acid monosodium salt, respectively. Citric acid and sodium citrate are classifiable under 2918.14.0000 and 2918.15.1000 of the Harmonized Tariff Schedule of the United States (HTSUS), respectively. Potassium citrate and crude calcium citrate are classifiable under 2918.15.5000 and 3824.90.9290 of the HTSUS, respectively. Blends that include citric acid, sodium citrate, and potassium citrate are classifiable under 3824.90.9290 of the HTSUS. Although the HTSUS subheadings are provided for convenience and customs purposes, the written description of the merchandise is dispositive.

Injury Test

Because the PRC is a ''Subsidies Agreement Country'' within the meaning of section 701(b) of the Tariff Act of 1930, as amended (''Act''), section 701(a)(2) of the Act applies to this investigation. Accordingly, the International Trade Commission (''ITC'') must determine whether imports of the subject merchandise from the PRC materially injure, or threaten material injury to a U.S. industry. On June 11, 2008, the ITC published its preliminary determination that there is a reasonable indication that an industry in the United States is materially injured or threatened with material injury by reason of imports from China of citric acid. *See Citric Acid and Certain Citrate Salts From Canada and China; Determinations*, 73 FR 33115 (June 11, 2008).

Analysis of Comments Received

All issues raised in the case and rebuttal briefs by parties to this investigation are addressed in the Memorandum from John M. Andersen, Acting Deputy Assistant Secretary for Antidumping and Countervailing Duty Operations, to Ronald K. Lorentzen, Acting Assistant Secretary for Import Administration, entitled ''Issues and Decision Memorandum for the Final Determination in the Countervailing Duty Investigation of Citric Acid and Certain Citrate Salts from the People's Republic of China'' (April 6, 2009) (hereafter referred to as the ''Decision Memorandum), which is hereby adopted by this notice. Attached to this notice as an Appendix is a list of the issues that parties have raised and to which we have responded in the Decision Memorandum. Parties can find this public memorandum in the Department's CRU. In addition, a complete version of the Decision Memorandum can be accessed directly on the Internet at http://ia.ita.doc.gov/frn/. The paper copy and electronic version of the Decision Memorandum are identical in content.

Use of Adverse Facts Available

For purposes of this final determination, we have continued to rely on facts available and have again used adverse inferences in accordance with sections 776(a) and (b) of the Act to determine the countervailable subsidy rates for Anhui BBCA Biochemical Co., Ltd. (''Anhui BBCA''), which is one of the three companies selected to respond to our questionnaires. A full discussion of our decision to apply adverse facts available is presented in the Decision Memorandum in the section ''Use of Facts Otherwise Available and Adverse Facts Available.''

In a departure from the *Preliminary Determination*, the Department now finds that the use of ''facts otherwise available'' is warranted with regard to policy lending because TTCA provided information that could not be verified. *See* Decision Memorandum, at Comment 19. Moreover, TTCA failed to cooperate by not acting to the best of its ability in this investigation. Accordingly, we find that an adverse inference is warranted, pursuant to section 776(b) of the Act, to ensure that TTCA does not obtain a more favorable result than had it fully complied with our request for information. *See* Decision Memorandum, at Comment 19.

For reasons explained in the ''Analysis of Programs'' section I.A (Programs Determined to Be Countervailable: Energy and Water Savings Grant) in the Decision Memorandum, we find the use of ''facts otherwise available'' is warranted, pursuant to section 776(a)(2)(A) and (D) of the Act, with regard to the specificity determination for the Energy and Water Savings Grant program because the GOC would not provide requested information and did not provide verifiable program usage data. Because the GOC refused to provide information that would allow for a *de facto* specificity analysis using accurate and verifiable data and failed to act to the best of its ability, we have employed an adverse inference in selecting from among the facts otherwise available. Accordingly, pursuant to section 776(b) of the Act, we find that this program is *de facto* specific within the meaning of section 771(5A)(D)(iii) of the Act.

Suspension of Liquidation

In accordance with section 705(c)(1)(B)(i)(I) of the Act, we have calculated an individual rate for the companies under investigation, Anhui BBCA, TTCA and Yixing Union. Section 705(c)(5)(A)(i) of the Act states that for companies not investigated, we will determine an all–others rate equal to the weighted average countervailable subsidy rates established for exporters and producers individually investigated, excluding any zero and *de minimis* countervailable subsidy rates, and any rates determined entirely under section 776 of the Act. As Anhui BBCA's rate was calculated under section 776 of the Act, it is not included in the all–others rate.

Notwithstanding the language of section 705(c)(5)(A)(i) of the Act, we have not calculated the all–others rate by weight averaging the rates of TTCA and Yixing Union because doing so risks disclosure of proprietary information. Therefore, we have calculated a simple average of the two responding firms' rates. Finally, because TTCA's rate includes export subsidies, the all–others rate also includes export subsidies.

Exporter/Manufacturer	Net Subsidy Rate
TTCA Co., Ltd. (a.k.a. Shandong TTCA Biochemistry Co., Ltd.) ...	12.68
Yixing Union Biochemical Co., Ltd.; and Yixing Union Cogeneration Co., Ltd. ..	3.60
Anhui BBCA Biochemical Co., Ltd.	118.95
All–Others	8.14

In accordance with section 703(d) of the Act, we instructed U.S. Customs and Border Protection to discontinue the suspension of liquidation for countervailing duty purposes for subject merchandise entered on or after January 17, 2009, but to continue the suspension of liquidation of entries made from September 19, 2008, through January 16, 2009.

We will issue a countervailing duty order and reinstate the suspension of liquidation under section 706(a) of the Act if the ITC issues a final affirmative injury determination, and will require a cash deposit of estimated countervailing duties for such entries of merchandise in the amounts indicated above. If the ITC determines that material injury, or threat of material injury, does not exist, this proceeding will be terminated and all estimated duties deposited or securities posted as a result of the suspension of liquidation will be refunded or canceled.

ITC Notification

In accordance with section 705(d) of the Act, we will notify the ITC of our determination. In addition, we are making available to the ITC all non–privileged and non–proprietary information related to this investigation. We will allow the ITC access to all privileged and business proprietary information in our files, provided the ITC confirms that it will not disclose such information, either publicly or under an APO, without the written consent of the Assistant Secretary for Import Administration.

Return or Destruction of Proprietary Information

In the event that the ITC issues a final negative injury determination, this notice will serve as the only reminder to parties subject to an administrative protective order (''APO'') of their responsibility concerning the destruction of proprietary information disclosed under APO in accordance with 19 CFR 351.305(a)(3). Timely written notification of the return/destruction of APO materials or conversion to judicial protective order is hereby requested. Failure to comply with the regulations and terms of an APO is a violation which is subject to sanction.

This determination is published pursuant to sections 705(d) and 777(i) of the Act.

Dated: April 6, 2009.

Ronald K. Lorentzen,

Acting Assistant Secretary for Import Administration.

APPENDIX

List of Comments and Issues in the Decision Memorandum

General Issues

Comment 1 Application of CVD Law to a Country the Department treats as an NME in a Parallel AD Investigation
Comment 2 Double Counting/Overlapping Remedies
Comment 3 Requirement to Provide Evidence of Lower Prices
Comment 4 Proposed Cutoff Date for Identifying Subsidies

Program Specific Issues

Comment 5 Policy Lending Whether Policy Lending Program Exists
Comment 6 Policy Lending Whether CIB is a Government Authority
Comment 7 Benchmark - Whether the Department is Required to Use a Chinese Benchmark
Comment 8 Benchmark - Whether Department Should Make an Inflation Adjustment to Its Regression–based Benchmark Rate
Comment 9 Benchmark - Whether the Department has a Basis for Treating ''Medium–term'' as Having Terms of Two Years or Less
Comment 10 Benchmark - Whether to Remove Certain Countries from the IMF Data
Comment 11 Benchmark - Whether Negative Inflation-adjusted Interest Rates Should be Excluded from the Regressions
Comment 12 Benchmark - Whether the Regression is Statistically Invalid
Comment 13 Benchmark - Whether the Difference Between Long- and Short-term Interest Rates Cannot be Based on BB–grade
Comment 14 Benchmark - Whether the Adjustment for Long-term Rates should be Additive or Multiplicative
Comment 15 Benchmark - Whether the Discount Rate Computation is Flawed
Comment 16 FIE Tax Programs - Whether FIE Tax Programs are Specific
Comment 17 FIE Tax Programs- Whether They Have Been Terminated

TTCA Specific Issues

Comment 18 Whether the Application of Total AFA is Warranted
Comment 19 Whether the Application of Partial AFA is Warranted
Comment 20 Provision of Plant and Equipment for LTAR Whether the Department is Required to Issue a Finding
Comment 21 Provision of Plant and Equipment for LTAR Proposed Methodology for Measuring the Benefit
Comment 22 Provision of Land for LTAR Whether Land is a Good or a Service
Comment 23 Provision of Land for LTAR Whether the Use of an External Benchmark is Appropriate
Comment 24 Provision of Land for LTAR Whether Benchmark is New Factual Information
Comment 25 Whether the Appropriate Benchmark Interest Rate for Floating Loan
Comment 26 Whether To Correct a Clerical Error in TTCA's Subsidy Calculation

Yixing Union Specific Issues

Comment 27 Attribution of Yixing Union and Cogeneration Based on Cross–Ownership
Comment 28 Whether to Apply AFA for Land in the YEDZ for LTAR Program
Comment 29 How to Treat the Transfer of Allocated to Granted Land-use Rights from HPP to Cogeneration
Comment 30 Whether the Department's Finding Regarding Land–use Rights in Yixing City Violates Due Process
Comment 31 Whether the Department's Finding Regarding the Torch Program Violates Due Process

[FR Doc. E9–8358 Filed 4–10–09; 8:45 am]

BILLING CODE: 3510–DS–S

DEPARTMENT OF COMMERCE

International Trade Administration

[A–570–937]

Citric Acid and Certain Citrate Salts From the People's Republic of China: Final Affirmative Determination of Sales at Less Than Fair Value

AGENCY: International Trade Administration, Department of Commerce.

DATES: *Effective Date:* April 13, 2009.

SUMMARY: We invited interested parties to comment on our preliminary determination of sales at LTFV. The Department of Commerce (''the Department'') has determined that citric acid and certain citrate salts (''citric acid'') from the People's Republic of China (''PRC'') is being, or is likely to be, sold in the United States at LTFV as provided in section 735 of the Tariff Act of 1930, as amended (''the Act''). The estimated margins of sales at less than

fair value (''LTFV'') are shown in the ''Final Determination Margins'' section of this notice.

FOR FURTHER INFORMATION CONTACT: Lilit Astvatsatrian or Andrea Staebler Berton, AD/CVD Operations, Office 8, Import Administration, International Trade Administration, U.S. Department of Commerce, 14th Street and Constitution Avenue, NW., Washington, DC 20230; telephone: (202) 482–6412 or (202) 482–4037, respectively.

SUPPLEMENTARY INFORMATION:

Case History

The Department published its preliminary determination of sales at LTFV on November 20, 2008. *See Citric Acid and Certain Citrate Salts from the People's Republic of China: Preliminary Determination of Sales at Less Than Fair Value and Postponement of Final Determination,* 73 FR 70328 (November 20, 2008) (''Preliminary Determination''). The period of investigation (''POI'') is October 1, 2007, to March 31, 2008.

Between January 7 and 20, 2009, the Department conducted verifications of TTCA Co., Ltd. (aka Shandong TTCA Biochemistry Co., Ltd.) (''TTCA'') and Yixing Union Biochemical Co., Ltd. (''Yixing Union'') (''respondents''). *See* the ''Verification'' section below for additional information.

We invited interested parties to comment on the *Preliminary Determination*. On February 25, 2009, Archer Daniels Midland Company, Cargill, Incorporated, and Tate & Lyle Americas, Inc. (collectively, ''Petitioners''), TTCA, and Yixing Union filed case briefs. On March 2, 2009, Petitioners, TTCA, and Yixing Union filed rebuttal briefs. The Department held a hearing on March 12, 2009.

Verification

As provided in section 782(i) of the Act, we verified the information submitted by TTCA and Yixing Union for use in our final determination. *See* the Department's verification reports on the record of this investigation in the Central Records Unit (''CRU''), Room 1117 of the main Department building, with respect to these entities. For all verified companies, we used standard verification procedures, including examination of relevant accounting and production records, as well as original source documents provided by respondents.

Analysis of Comments Received

All issues raised in the case and rebuttal briefs, and at the hearing, by parties to this investigation are addressed in the ''Issues and Decision Memorandum for the Investigation of Citric Acid and Certain Citrate Salts from the People's Republic of China,'' dated concurrently with this notice and which is hereby adopted by this notice (''Issues and Decision Memorandum''). A list of the issues which parties raised and to which we respond in the Issues and Decision Memorandum is attached to this notice as an Appendix. The Issues and Decision Memorandum is a public document and is on file in the CRU, and is accessible on the Web at *http://ia.ita.doc.gov/frn*. The paper copy and electronic version of the memorandum are identical in content.

Changes Since the Preliminary Determination

Based on our analysis of information on the record of this investigation, we have made changes to the margin calculations for the final determination for all mandatory respondents.

General Issues

- We have updated the Indonesian and Indian inflator information for the wholesale price index (''WPI'') as published in the *International Financial Statistics* of the International Monetary Fund. *See* Final Determination of the Antidumping Duty Investigation of Citric Acid and Certain Citrate Salts from the People's Republic of China: Surrogate Value Memorandum, dated April 6, 2009 (''Final SV Memo''), at 2. All inflated or deflated surrogate values were revised as a result of the updated inflators. *See* Issues and Decision Memorandum, at Comment 6.
- For the final determination, we deflated the surrogate values for marine insurance and truck freight. *See* Final SV Memo, at 2, and Issues and Decision Memorandum, at Comment 4.
- We have revised the surrogate value for sodium lignosulphonate. *See* Final SV Memo, at 3, and Issues and Decision Memorandum, at Comment 11B.
- We have revised the surrogate financial ratios by including interest expenses in the SG&A calculation. *See* Final SV Memo, at 3, and Issues and Decision Memorandum, at Comment 3.
- Consistent with our practice,[1] we have excluded beginning and ending finished goods inventories from the calculation of surrogate financial ratios for the final determination. *See* Final SV Memo, at 3.
- Based on the surrogate financial company's treatment of certain depreciation and warehouse expenses as selling expenses, and depreciation and repairs and maintenance as general and administrative expenses, we have reclassified these expenses from the surrogate factory overhead ratio to the surrogate selling, general, and administrative ratio calculation for the final determination. *See* Final SV Memo, at 3–4.
- We were unable to segregate and, therefore, were unable to exclude energy costs from the calculation of the surrogate financial ratios. Accordingly, we have disregarded the respondents' energy inputs (coal and steam by-product offsets for TTCA, electricity and steam for Yixing Union) in the calculation of normal value for purposes of the final determination, in order to avoid double-counting energy costs which have necessarily been captured in the surrogate financial ratios. *See* Investigation of Citric Acid and Certain Citrate Salts from the People's Republic of China: Analysis of the Final Determination Margin Calculation for TTCA Co., Ltd., (a.k.a. Shandong TTCA Biochemistry Co., Ltd.), dated April 6, 2009 (''TTCA Final Analysis Memo''), at 2; *see also* Investigation of Citric Acid and Certain Citrate Salts from the People's Republic of China: Analysis of the Final Determination Margin Calculation for Yixing Union Biochemical Co., Ltd., dated April 6, 2009 (''Yixing Union Final Analysis Memo''), at 1–2; and Issues and Decision Memorandum at Comment 2.

Company-Specific Changes Since the Preliminary Determination

TTCA

- For the final determination, we have adjusted TTCA's indirect labor. *See* TTCA Final Analysis Memo at 1–2 and Issues and Decision Memorandum, at Comment 10.
- For the final determination, we have added TTCA's billing adjustment expense to the gross unit price. *See* TTCA Final Analysis Memo, at 2 and Issues and Decision Memorandum, at Comment 11A.
- We have included TTCA's low protein scrap by-product in the calculation of the normal value. *See* TTCA Final Analysis Memo, at 2–3 and Issues and Decision Memorandum, at Comment 15.
- We have adjusted TTCA's reported consumption of calcium carbonate to account for the under-reported usage

[1] *See, e.g., Wooden Bedroom Furniture from the People's Republic of China: Final Results of the 2004–2005 Semi–Annual New Shipper Reviews,* 71 FR 70739 (December 6, 2006) and accompanying Issues and Decision Memorandum, at Comment 5; and *Malleable Iron Pipe Fittings from the People's Republic of China: Preliminary Results of Antidumping Duty Administrative Review,* 70 FR 76234, 76238 (December 23, 2005).

rate. *See* TTCA Final Analysis Memo, at 3.

Yixing Union

- We have valued Yixing Union's ocean freight using the reported international freight. *See* Yixing Union Final Analysis Memo.

Scope of Investigation

The scope of this investigation includes all grades and granulation sizes of citric acid, sodium citrate, and potassium citrate in their unblended forms, whether dry or in solution, and regardless of packaging type. The scope also includes blends of citric acid, sodium citrate, and potassium citrate; as well as blends with other ingredients, such as sugar, where the unblended form(s) of citric acid, sodium citrate, and potassium citrate constitute 40 percent or more, by weight, of the blend. The scope of this investigation also includes all forms of crude calcium citrate, including dicalcium citrate monohydrate, and tricalcium citrate tetrahydrate, which are intermediate products in the production of citric acid, sodium citrate, and potassium citrate. The scope of this investigation does not include calcium citrate that satisfies the standards set forth in the United States Pharmacopeia and has been mixed with a functional excipient, such as dextrose or starch, where the excipient constitutes at least 2%, by weight, of the product. The scope of this investigation includes the hydrous and anhydrous forms of citric acid, the dihydrate and anhydrous forms of sodium citrate, otherwise known as citric acid sodium salt, and the monohydrate and monopotassium forms of potassium citrate. Sodium citrate also includes both trisodium citrate and monosodium citrate, which are also known as citric acid trisodium salt and citric acid monosodium salt, respectively. Citric acid and sodium citrate are classifiable under 2918.14.0000 and 2918.15.1000 of the Harmonized Tariff Schedule of the United States (HTSUS), respectively. Potassium citrate and crude calcium citrate are classifiable under 2918.15.5000 and 3824.90.9290 of the HTSUS, respectively. Blends that include citric acid, sodium citrate, and potassium citrate are classifiable under 3824.90.9290 of the HTSUS. Although the HTSUS subheadings are provided for convenience and customs purposes, the written description of the merchandise is dispositive.

Surrogate Country

In the *Preliminary Determination,* we stated that we had selected Indonesia as the appropriate surrogate country to use in this investigation for the following reasons: (1) it is a significant producer of comparable merchandise; (2) it is at a similar level of economic development comparable to that of the PRC; and (3) we have reliable data from Indonesia that we can use to value the factors of production. *See Preliminary Determination.* For the final determination, we continue to use Indonesia as the primary surrogate country. *See* Issues and Decision Memorandum, at Comment 1.

Separate Rates

In proceedings involving non-market-economy (''NME'') countries, the Department begins with a rebuttable presumption that all companies within the country are subject to government control and, thus, should be assigned a single antidumping duty deposit rate. It is the Department's policy to assign all exporters of merchandise subject to an investigation in an NME country this single rate unless an exporter can demonstrate that it is sufficiently independent so as to be entitled to a separate rate. *See Final Determination of Sales at Less Than Fair Value: Sparklers from the People's Republic of China,* 56 FR 20588 (May 6, 1991) (''*Sparklers*''), as amplified by *Notice of Final Determination of Sales at Less Than Fair Value: Silicon Carbide from the People's Republic of China,* 59 FR 22585 (May 2, 1994) (''*Silicon Carbide*''), and 19 CFR 351.107(d).

In the *Preliminary Determination,* we found that TTCA, Yixing Union and 11 separate rate applicants demonstrated their eligibility for separate rate status. For the final determination, we continue to find that the evidence placed on the record of this investigation by TTCA, Yixing Union, and the separate rate applicants demonstrate both a *de jure* and *de facto* absence of government control, with respect to their respective exports of the merchandise under investigation, and, thus continue to find that they are eligible for separate rate status.

Use of Facts Available

Section 776(a)(2) of the Act, provides that, if an interested party: (A) Withholds information that has been requested by the Department; (B) fails to provide such information in a timely manner or in the form or manner requested subject to sections 782(c)(1) and (e) of the Act; (C) significantly impedes a proceeding under the antidumping statute; or (D) provides such information but the information cannot be verified, the Department shall, subject to subsection 782(d) of the Act, use facts otherwise available in reaching the applicable determination.

Section 782(c)(1) of the Act provides that if an interested party ''promptly after receiving a request from (the Department) for information, notifies (the Department) that such party is unable to submit the information requested in the requested form and manner, together with a full explanation and suggested alternative forms in which such party is able to submit the information,'' the Department may modify the requirements to avoid imposing an unreasonable burden on that party.

Section 782(d) of the Act provides that, if the Department determines that a response to a request for information does not comply with the request, the Department will inform the person submitting the response of the nature of the deficiency and shall, to the extent practicable, provide that person the opportunity to remedy or explain the deficiency. If that person submits further information that continues to be unsatisfactory, or this information is not submitted within the applicable time limits, the Department may, subject to section 782(e), disregard all or part of the original and subsequent responses, as appropriate.

Section 782(e) of the Act states that the Department shall not decline to consider information deemed ''deficient'' under section 782(d) if: (1) The information is submitted by the established deadline; (2) the information can be verified; (3) the information is not so incomplete that it cannot serve as a reliable basis for reaching the applicable determination; (4) the interested party has demonstrated that it acted to the best of its ability; and (5) the information can be used without undue difficulties.

Furthermore, section 776(b) of the Act states that if the Department ''finds that an interested party has failed to cooperate by not acting to the best of its ability to comply with a request for information from the administering authority or the Commission, the administering authority or the Commission * * *, in reaching the applicable determination under this title, may use an inference that is adverse to the interests of that party in selecting from among the facts otherwise available.'' *See also Statement of Administrative Action (SAA) accompanying the Uruguay Round Agreements Act (URAA),* H.R. Rep. No. 103–316, Vol. 1 at 870 (1994).

For this final determination, in accordance with sections 776(a)(2)(A), (B) and (D) and 776(b) of the Act, we have determined that the use of adverse

facts available (''AFA'') is warranted for the PRC-wide entity, as discussed below.

The PRC-Wide Rate

Because we begin with the presumption that all companies within an NME country are subject to government control and because only the companies listed under the ''Final Determination Margins'' section below have overcome that presumption, we are applying a single antidumping rate—the PRC-wide rate—to all other exporters of subject merchandise from the PRC. *See, e.g., Synthetic Indigo from the People's Republic of China: Notice of Final Determination of Sales at Less Than Fair Value,* 65 FR 25706 (May 3, 2000). The PRC-wide rate applies to all entries of subject merchandise except for entries from the respondents identified as receiving a separate rate in the ''Final Determination Margins'' section below. In the *Preliminary Determination,* the Department found that the PRC-wide entity did not respond to our requests for information because record evidence indicates there were more exporters of citric acid from the PRC during the POI than those that were found to be eligible for a separate rate and responded to the Q&V questionnaire or the full antidumping questionnaire. Therefore, in the *Preliminary Determination* we treated these PRC exporters as part of the PRC-wide entity because they did not demonstrate that they operate free of government control over their export activities. No additional information was placed on the record with respect to these entities after the *Preliminary Determination.* In addition, because the PRC-wide entity has not provided the Department with the requested information, pursuant to section 776(a)(2)(A) and (C) of the Act, the Department continues to find that the use of facts available is appropriate to determine the PRC-wide rate. Section 776(b) of the Act provides that, in selecting from among the facts otherwise available, the Department may employ an adverse inference if an interested party fails to cooperate by not acting to the best of its ability to comply with requests for information. *See Notice of Final Determination of Sales at Less Than Fair Value: Certain Cold-Rolled Flat-Rolled Carbon-Quality Steel Products from the Russian Federation,* 65 FR 5510, 5518 (February 4, 2000). *See also SAA* at 870. We have determined that, because the PRC-wide entity did not respond to our request for information, it has failed to cooperate to the best of its ability. Therefore, the Department finds that, in selecting from among the facts otherwise available, an adverse inference is warranted.

In the *Preliminary Determination,* as facts available, we assigned to the PRC-wide entity the margin alleged in the petition, *i.e.,* 156.87 percent. *See Preliminary Determination,* 73 FR at 70332. For the final determination, we have continued to assign to the PRC-wide entity the rate of 156.87 percent.

Corroboration

Section 776(c) of the Act provides that, when the Department relies on secondary information in using the facts otherwise available, it must, to the extent practicable, corroborate that information from independent sources that are reasonably at its disposal. We have interpreted ''corroborate'' to mean that we will, to the extent practicable, examine the reliability and relevance of the information submitted. *See Notice of Final Determination of Sales at Less Than Fair Value: Certain Cold-Rolled Flat-Rolled Carbon-Quality Steel Products from Brazil,* 65 FR 5554, 5568 (February 4, 2000); see, *e.g., Tapered Roller Bearings and Parts Thereof, Finished and Unfinished, from Japan, and Tapered Roller Bearings, Four Inches or Less in Outside Diameter, and Components Thereof, from Japan; Preliminary Results of Antidumping Duty Administrative Reviews and Partial Termination of Administrative Reviews,* 61 FR 57391, 57392 (November 6, 1996), unchanged in *Tapered Roller Bearings and Parts Thereof, Finished and Unfinished, from Japan, and Tapered Roller Bearings, Four Inches or Less in Outside Diameter, and Components Thereof, from Japan: Final Results of Antidumping Duty Administrative Reviews and Termination in Part,* 62 FR 11825 (March 13, 1997). The Department's reliance on the petition rate to determine an AFA rate is subject to the requirement to corroborate secondary information.

At the *Preliminary Determination,* in accordance with section 776(c) of the Act, we corroborated our AFA margin by comparing the U.S. prices and normal values from the petition to the U.S. prices and normal values for the mandatory respondents. Similarly, for the final determination, we have also compared the U.S. prices and normal values from the petition (that were used to derive the margin for our initiation of this proceeding) to the U.S. prices and normal values for the mandatory respondents. We found that the U.S. prices and normal values used to calculate the initiation margin were within the range of net U.S. prices and normal values, respectively, used in our margin calculations for the mandatory respondents in this investigation.

Because no parties commented on the selection of the PRC-wide rate, we continue to find that the margin of 156.87 percent has probative value. Accordingly, we find that the rate of 156.87 percent is corroborated within the meaning of section 776(c) of the Act.

Combination Rates

In the *Preliminary Determination,* the Department stated that it would calculate combination rates for the respondents that are eligible for a separate rate in this investigation. *See Preliminary Determination,* 73 FR at 62961. This practice is described in Policy Bulletin 05.1, ''Separate Rates Practice and Application of Combination Rates in Antidumping Investigations Involving Non-Market Economy Countries'' available at *http://ia.ita.doc.gov/policy/index.html.*

Final Determination Margins

We determine that the following percentage weighted-average margins exist for the POI:

Exporter	Producer	Margin
TTCA Co., Ltd. (a.k.a. Shandong TTCA Biochemistry Co., Ltd.).	TTCA Co., Ltd. (a.k.a. Shandong TTCA Biochemistry Co., Ltd.).	129.08
Yixing Union Biochemical Co., Ltd	Yixing Union Biochemical Co., Ltd	94.61
Anhui BBCA Biochemical Co., Ltd	Anhui BBCA Biochemical Co., Ltd	111.85
Anhui BBCA Biochemical Co., Ltd	China BBCA Maanshan Biochemical Corp	111.85
A.H.A. International Co., Ltd	Yixing Union Biochemical Co., Ltd	111.85
A.H.A. International Co., Ltd	Nantong Feiyu Fine Chemical Co., Ltd	111.85
High Hope International Group Jiangsu Native Produce IMP & EXP Co., Ltd.	Yixing Union Biochemical Co., Ltd	111.85
Huangshi Xinghua Biochemical Co., Ltd	Huangshi Xinghua Biochemical Co., Ltd	111.85

Exporter	Producer	Margin
Lianyungang JF International Trade Co., Ltd	TTCA Co., Ltd. (a.k.a. Shandong TTCA Biochemistry Co., Ltd.).	111.85
Laiwu Taihe Biochemistry Co., Ltd	Laiwu Taihe Biochemistry Co., Ltd	111.85
Lianyungang Shuren Scientific Creation Import & Export Co., Ltd.	Lianyungang Great Chemical Industry Co., Ltd	111.85
Penglai Marine Bio-Tech Co. Ltd	Penglai Marine Bio-Tech Co. Ltd	111.85
RZBC Imp & Exp. Co., Ltd./RZBC Co., Ltd./RZBC (Juxian) Co., Ltd.	RZBC Co., Ltd	111.85
RZBC Imp & Exp. Co., Ltd./RZBC Co., Ltd./RZBC (Juxian) Co., Ltd.	RZBC (Juxian) Co., Ltd	111.85
RZBC Imp & Exp. Co., Ltd./RZBC Co., Ltd./RZBC (Juxian) Co., Ltd.	Lianyungang Great Chemical Industry Co., Ltd	111.85
Shihezi City Changyun Biochemical Co., Ltd	Shihezi City Changyun Biochemical Co., Ltd	111.85
Weifang Ensign Industry Co., Ltd	Weifang Ensign Industry Co., Ltd	111.85
PRC-Wide Entity		156.87

Disclosure

We will disclose the calculations performed within five days of the date of publication of this notice to parties in this proceeding in accordance with 19 CFR 351.224(b).

Continuation of Suspension of Liquidation

In accordance with section 735(c)(1)(B) of the Act, we are directing U.S. Customs and Border Protection (''CBP'') to continue to suspend liquidation of all imports of subject merchandise entered or withdrawn from warehouse, for consumption on or after November 20, 2008, the date of publication of the *Preliminary Determination* in the **Federal Register**. We will instruct CBP to continue to require a cash deposit or the posting of a bond for all companies based on the estimated weighted-average dumping margins shown above, adjusted for the export subsidy rate determined in *CVD Citric Acid Final* (*i.e.*, countervailable subsidy of 1.76 percent *ad valorem*). *See Citric Acid and Certain Citrate Salts From the People's Republic of China: Final Affirmative Countervailing Duty Determination* (''*CVD Citric Acid Final*''), to be published concurrently with this notice. Furthermore, for all separate-rate recipients that were not selected as mandatory respondents, we will instruct CBP to require an antidumping cash deposit or the posting of a bond for each entry equal to the average of the margins calculated for the mandatory respondents, adjusted for their respective export subsidy rates, if applicable, from *CVD Citric Acid Final.* The suspension of liquidation instructions will remain in effect until further notice.

ITC Notification

In accordance with section 735(d) of the Act, we have notified the International Trade Commission (''ITC'') of our final determination of sales at LTFV. As our final determination is affirmative, in accordance with section 735(b)(2) of the Act, within 45 days the ITC will determine whether the domestic industry in the United States is materially injured, or threatened with material injury, by reason of imports or sales (or the likelihood of sales) for importation of the subject merchandise. If the ITC determines that material injury or threat of material injury does not exist, the proceeding will be terminated and all securities posted will be refunded or canceled. If the ITC determines that such injury does exist, the Department will issue an antidumping duty order directing CBP to assess antidumping duties on all imports of the subject merchandise entered, or withdrawn from warehouse, for consumption on or after the effective date of the suspension of liquidation.

Notification Regarding APO

This notice also serves as a reminder to the parties subject to administrative protective order (''APO'') of their responsibility concerning the disposition of proprietary information disclosed under APO in accordance with 19 CFR 351.305. Timely notification of return or destruction of APO materials or conversion to judicial protective order is hereby requested. Failure to comply with the regulations and the terms of an APO is a sanctionable violation.

This determination and notice are issued and published in accordance with sections 735(d) and 777(i)(1) of the Act.

Dated: April 6, 2009.

Ronald K. Lorentzen,

Acting Assistant Secretary for Import Administration.

Appendix

General Issues

Comment 1: Selection of Surrogate Country

Comment 2: Treatment of Energy in the Surrogate Financial Statements

Comment 3: Treatment of Interest Expense and Income in Selling, General and Administrative Expenses

Comment 4: Correct Calculation for the Inflator of the Indian Trucking Value

Comment 5A: Surrogate Value for Hydrochloric Acid/Hydrogen Chloride

Comment 5B: Surrogate Value for Calcium Carbonate

Comment 5C: Surrogate Value for Coal

Comment 5D: Surrogate Value for Water

Comment 5E: Surrogate Value for Brokerage and Handling

Comment 6: Indonesian Inflator

Comment 7: Valuation of High Protein Corn By-Product

Comment 8: Additional Expenses for Sales of Corn Feed By-Product Offset

Issues Specific to TTCA

Comment 9: Date of Sale: Contract Date Versus Invoice Date

Comment 10: Adjustment of TTCA's Labor Factors

Comment 11A: Correction of Clerical Error in Application of Billing Adjustment

Comment 11B: Correction of Clerical Error in the Surrogate Value of Sodium Lignosulphonate

Comment 12: Offset for Steam By-Product

Comment 13: Use of TTCA's Market-Economy Freight Costs

Comment 14: Adjustment of the Surrogate Value for Hydrochloric Acid/Hydrogen Chloride

Comment 15: Low-Protein Scrap Offset

Issues Specific to Yixing Union

Comment 16: Yixing Union Corn Usage Rate

Comment 17: Yixing Union Mycelium By-Product Offset

Comment 18: Inflation of the Surrogate Value for Steam

[FR Doc. E9–8359 Filed 4–10–09; 8:45 am]

BILLING CODE 3510–DS–P

DEPARTMENT OF COMMERCE

International Trade Administration

A–122–853

Notice of Final Determination of Sales at Less Than Fair Value: Citric Acid and Certain Citrate Salts from Canada

AGENCY: Import Administration, International Trade Administration, Department of Commerce.

SUMMARY: We determine that imports of citric acid and certain citrate salts (citric acid) are being, or are likely to be, sold in the United States at less than fair value (LTFV), as provided in section 735 of the Tariff Act of 1930, as amended (the Act). The estimated margins of sales at LTFV are shown in the ''Final Determination Margins'' section of this notice.

EFFECTIVE DATE: April 13, 2009.

FOR FURTHER INFORMATION CONTACT: Terre Keaton Stefanova or Rebecca Trainor, AD/CVD Operations, Office 2, Import Administration, International Trade Administration, U.S. Department of Commerce, 14th Street and Constitution Avenue, NW, Washington, DC 20230; telephone: (202) 482–1280 or (202) 482–4007, respectively.

SUPPLEMENTARY INFORMATION:

Background

On November 20, 2008, the Department of Commerce (Department) published in the **Federal Register** the preliminary determination of sales at LTFV in the antidumping duty investigation of citric acid from Canada. *See Citric Acid and Certain Citrate Salts from Canada: Notice of Preliminary Determination of Sales at Less Than Fair Value and Postponement of Final Determination*, 73 FR 70324 (November 20, 2008) (*Preliminary Determination*).

In November and December 2008, the respondent, Jungbunzlauer Technology GMBH & Co KG (JBLT), submitted revised home market and U.S. sales listings and cost data. On December 1, 2008, we received pre–verification comments from the petitioners.[1] On December 18, 2008, the petitioners requested a hearing to discuss issues addressed by the interested parties in their case and rebuttal briefs. From December 9 through December 16, 2008, we verified the respondent's sales data.

On January 6, 2009, the respondent informed the Department that its Canadian operations had recently undergone a corporate restructuring which resulted in JBL Canada, Inc. becoming the producer, seller and exporter of citric acid from Canada, effective December 31, 2008. For further discussion, see ''Corporate Restructuring'' section below.

From January 12 through January 16, 2009, we verified the respondent's cost data. On February 5, 2009, we issued the sales verification report,[2] and requested that the respondent submit a revised home market and U.S. sales listing per verification findings. We received the revised sales listings on February 17, 2009. On February 24, 2009, we issued the cost verification report.[3] We provided the interested parties an opportunity to comment on the *Preliminary Determination* and the Department's verification findings.

On February 26, 2009, the petitioners withdrew their request for a hearing. On March 3 and March 9, 2009, respectively, the petitioners and respondent each submitted case and rebuttal briefs. Because the petitioners were the only interested party to request a hearing and it subsequently withdrew its request, no hearing was held on issues raised in the case and rebuttal briefs.

Period of Investigation

The period of investigation (POI) is April 1, 2007, through March 31, 2008. This period corresponds to the four most recent fiscal quarters prior to the month of the filing of the petition.

Scope of Investigation

The scope of this investigation includes all grades and granulation sizes of citric acid, sodium citrate, and potassium citrate in their unblended forms, whether dry or in solution, and regardless of packaging type. The scope also includes blends of citric acid, sodium citrate, and potassium citrate; as well as blends with other ingredients, such as sugar, where the unblended form(s) of citric acid, sodium citrate, and potassium citrate constitute 40 percent or more, by weight, of the blend. The scope of this investigation also includes all forms of crude calcium citrate, including dicalcium citrate monohydrate, and tricalcium citrate tetrahydrate, which are intermediate products in the production of citric acid, sodium citrate, and potassium citrate. The scope of this investigation does not include calcium citrate that satisfies the standards set forth in the United States Pharmacopeia and has been mixed with a functional excipient, such as dextrose or starch, where the excipient constitutes at least 2 percent, by weight, of the product. The scope of this investigation includes the hydrous and anhydrous forms of citric acid, the dihydrate and anhydrous forms of sodium citrate, otherwise known as citric acid sodium salt, and the monohydrate and monopotassium forms of potassium citrate. Sodium citrate also includes both trisodium citrate and monosodium citrate, which are also known as citric acid trisodium salt and citric acid monosodium salt, respectively. Citric acid and sodium citrate are classifiable under 2918.14.0000 and 2918.15.1000 of the Harmonized Tariff Schedule of the United States (HTSUS), respectively. Potassium citrate and crude calcium citrate are classifiable under 2918.15.5000 and 3824.90.9290 of the HTSUS, respectively. Blends that include citric acid, sodium citrate, and potassium citrate are classifiable under 3824.90.9290 of the HTSUS. Although the HTSUS subheadings are provided for convenience and customs purposes, the written description of the merchandise is dispositive.

Corporate Restructuring

The respondent reported, and the Department verified, that during the POI, three subsidiaries of the Jungbunzlauer Group (JBL Group) were involved in the production and sale of citric acid to the United States. The production of citric acid in Canada involved two separate legal entities, JBLT and JBL Canada, Inc. JBLT was responsible for citric acid production and JBL Canada Inc. was responsible for infrastructure and personnel in connection with JBLT's operations. The third entity, JBL Inc., located in the United States was responsible for selling products from the JBL Group (including JBLT) to the United States, Canada and Mexico.

As noted above, during the course of this investigation JBLT informed the Department that it had undergone a corporate restructuring. We requested that JBLT submit a detailed explanation and supporting documentation of the corporate restructuring. We also provided the petitioners the opportunity to file comments. See January 23, 2009 Memorandum to the File, and the

[1] The petitioners in this investigation are Archer Daniels Midland Company, Cargill, Incorporated, and Tate & Lyle Americas, Inc.

[2] *See* Memorandum to the File through James Maeder, Director Office 2 from Rebecca Trainor and Kate Johnson International Trade Compliance Analysts Office 2, ''Verification of the Sales Response of Jungbunzlauer Technology GMBH & Co. KG (JBLT) in the Antidumping Investigation of Citric Acid and Certain Citrate Salts from Canada,'' dated February 5, 2009 (Sales Verification Report).

[3] *See* Memorandum to the File through Neal M. Harper, Director of Office of Accounting from James Balog Senior Accountant, Office of Accounting, ''Verification of the Cost Response of Jungbunzlauer Technology GMBH & Co. KG in the Antidumping Investigation of Citric Acid and Certain Citrate Salts from Canada,'' dated February 24, 2009 (Cost Verification Report).

January 9 and 14, 2009, submissions from JBLT. We did not receive comments from the petitioners on this matter. At verification we examined the corporate restructuring information submitted by JBLT (*see* Cost Verification Report at 4).

Based on the corporate restructuring documentation, as verified, JBL Canada Inc., rather than JBLT, is the entity responsible for all the activities related to Canadian citric acid production and exportation, effective December 31, 2008. Therefore, we will assign the final determination margin to JBL Canada, Inc.

Verification

As provided in section 782(i) of the Act, we verified the sales and cost information submitted by the respondent for use in our final determination. We used standard verification procedures including an examination of relevant accounting and production records, and original source documents provided by the respondent. Our sales and cost verification results are outlined in separate verification reports. *See* Sales Verification Report and Cost Verification Report. The verification reports are on file and available in the Central Records Unit, Room 1117 of the Commerce Department.

Analysis of Comments Received

All issues raised in the case and rebuttal briefs submitted by the parties to this investigation are addressed in the ''Issues and Decision Memorandum for the Final Determination in the Less–Than-Fair–Value Investigation of Citric Acid and Certain Citrate Salts from Canada'' from John Anderson, Acting Deputy Assistant Secretary for Import Administration, to Ronald K. Lorentzen, Acting Assistant Secretary for Import Administration (Decision Memo), dated April 6, 2009, which is hereby adopted by this notice. A list of the issues that parties have raised and to which we have responded, all of which are in the Decision Memo, is attached to this notice as an appendix. Parties can find a complete discussion of all issues raised in this investigation and the corresponding recommendations in the Decision Memo, which is on file in the Central Records Unit, Room 1117 of the Commerce Department. In addition, a complete version of the Decision Memo can be accessed directly on the Web at http://ia.ita.doc.gov/frn. The paper copy and electronic version of the Decision Memo are identical in content.

Changes Since the Preliminary Determination

Based on our analysis of the comments received and our findings at verification, we have made certain changes to the margin calculations for JBL Canada Inc. For a discussion of these changes, see the ''Margin Calculations'' section of the Decision Memo.

Facts Available

Section 776(a) of the Act provides that the Department will apply ''facts otherwise available'' if necessary information is not available on the record or an interested party: 1) withholds information that has been requested by the Department; 2) fails to provide such information within the deadlines established, or in the form or manner requested by the Department, subject to subsections (c)(1) and (e) of section 782 of the Act; 3) significantly impedes a proceeding; or 4) provides such information, but the information cannot be verified. As stated in the *Preliminary Determination*, our antidumping questionnaire instructs respondents to report prices and expenses in the currency in which they were incurred. *See Preliminary Determination* at 73 FR 70327. Nevertheless, in this case, the respondent reported data that had been converted from multiple currencies into Canadian dollars (CAD) in the home market, and into U.S. dollars (USD) in the U.S. market because its company–wide electronic data processing system (SAP) automatically converts all foreign currency transactions into the currency of the respective JBL Group entity at the moment of posting. According to the respondent, the entry of data and the currency conversion is a simultaneous process in its accounting system. As a result, SAP does not retain the original foreign currency amount in the sales database or in the general ledger.[4] Based on the respondent's representation that the currency conversion process is a company–wide procedure that is done in the normal course of business, we accepted the data as reported for the preliminary determination. However, we stated our intention to examine the reasonableness of the price and expense reporting based on this system at verification. *See Preliminary Determination* at 73 FR 70327.

At verification, we found that the SAP system does maintain a record of the original currency from which entries were converted and the exchange rate used. Therefore, the price and expense data could have been reported in the original foreign currency amount as incurred. *See* Sales Verification Report at 4 and 5. Based on our verification findings, we believe that it was possible for the respondent to have reported prices and expenses in the currency in which they were incurred, contrary to the representation in the respondent's questionnaire responses. For these reasons, we find that it is appropriate to resort to facts otherwise available to account for the unreported information. *See, e.g., Canned Pineapple Fruit from Thailand*, 68 FR 65247 (November 19, 2003), and accompanying Issues and Decision Memorandum at Comment 20b where the Department applied facts otherwise available to a respondent that did not provide requested information. Therefore, we have determined that the gross unit prices for certain home market customers who were invoiced in USD during the POI (see the Sales Verification Report at Exhibit 4), and all U.S inland freight expenses should be based on facts available in accordance with sections 776(a)(2)(A),(B), and (D) of the Act.[5]

In selecting from among the facts otherwise available, section 776(b) of the Act authorizes the Department to use an adverse inference if the Department finds that an interested party failed to cooperate by not acting to the best of its ability to comply with a request for information. *See, e.g., Notice of Final Results of Antidumping Duty Administrative Review: Stainless Steel Bar from India*, 70 FR 54023, 54025–26 (September 13, 2005); *see also Notice of Final Determination of Sales at Less Than Fair Value and Final Negative Critical Circumstances: Carbon and Certain Alloy Steel Wire Rod from Brazil*, 67 FR 55792, 55794–96 (August 30, 2002). The Statement of Administrative Action provides guidance by explaining that adverse inferences are appropriate ''to ensure that the party does not obtain a more favorable result by failing to cooperate than if it had cooperated fully.'' *See* Statement of Administrative Action accompanying the Uruguay Round Agreements Act, H.R. Doc. No. 103–316, Vol. 1, at 870 (1994). Furthermore, ''affirmative evidence of bad faith on the part of a respondent is not required before the Department may make an

[4] *See* JBLT's October 9, 2008, Response to Supplemental Questions Regarding Currency Conversions and Date of Sale at 3; and JBLT's October 14, 2008, First Supplemental Questionnaire Response at 5–6.

[5] Because we could not isolate the U.S. inland freight expenses that were affected by the inappropriate currency conversions, we are applying facts available to all reported U.S. inland freight expenses.

adverse inference.'' *See Antidumping Duties; Countervailing Duties*, 62 FR 27296, 27340 (May 19, 1997); *see also Nippon Steel Corp. v. United States*, 337 F.3d 1373, 1383 (Fed. Cir. 2003) (*Nippon*). Because: 1) the respondent had the necessary information within its control and it did not report this information; and 2) it failed to put forth its maximum effort to provide the requested information, we find that the respondent failed to cooperate to the best of its ability. Therefore, for the final determination, we are using facts available with an adverse inference and applying it to the gross unit prices of certain home market sales, and to all U.S. inland freight expenses. Specifically, as adverse facts available, we increased both the affected home market sales prices and the U.S. freight expenses by 1.16 percent, *i.e.*, the percentage difference between the Department's weighted–average POI exchange rate (used to convert comparison–market values to USD in the margin program), and JBLT's POI average exchange rate (used by JBLT's SAP system for currency conversion purposes). For further discussion, *see* Decision Memo at Comment 4 and the April 6, 2009, Memorandum to The File from Case Analyst, entitled ''Calculations Performed for Jungbunzlauer Technology GMBH & Co. KG for the Final Determination in the Antidumping Duty Investigation of Citric Acid and Certain Citrate Salts from Canada.''

Continuation of Suspension of Liquidation

In accordance with section 735(c)(1)(B) of the Act, we are directing U.S. Customs and Border Protection (CBP) to continue to suspend liquidation of all imports of subject merchandise that are entered or withdrawn from warehouse, for consumption on or after November 20, 2008, the date of publication of the preliminary determination in the **Federal Register**. We will instruct CBP to continue to require a cash deposit or the posting of a bond for all companies based on the estimated weighted–average dumping margins shown below. The suspension of liquidation instructions will remain in effect until further notice.

Final Determination Margins

We determine that the following weighted–average dumping margins exist for the period April 1, 2007, through March 31, 2008:

Manufacturer/Exporter	Weighted Average Margin (percent)
JBL Canada, Inc.	23.21
All Others	23.21

All–Others Rate

Section 735(c)(5)(A) of the Act provides that the estimated ''All–Others'' rate shall be an amount equal to the weighted average of the estimated weighted–average dumping margins established for exporters and producers individually investigated, excluding any zero or *de minimis* margins, and any margins determined entirely under section 776 of the Act. In this investigation the Department calculated a company–specific rate only for JBL Canada Inc. Therefore, for purposes of determining the all–others rate and pursuant to section 735(c)(5)(A) of the Act, we are using the weighted–average dumping margin calculated for JBL Canada, Inc., as referenced above. *See, e.g., Notice of Final Determination of Sales at Less Than Fair Value: Stainless Steel Sheet and Strip in Coils From Italy*, 64 FR 30750, 30755 (June 8, 1999); and *Coated Free Sheet Paper from Indonesia: Notice of Preliminary Determination of Sales at Less Than Fair Value and Postponement of Final Determination*,, 72 FR 30753, 30757 (June 4, 2007), unchanged in final determination, *Notice of Final Determination of Sales at Less Than Fair Value: Coated Free Sheet Paper from Indonesia*, 72 FR 60636 (October 25, 2007).

Disclosure

We will disclose the calculations performed within five days of the date of publication of this notice to parties in this proceeding in accordance with 19 CFR 351.224(b).

International Trade Commission Notification

In accordance with section 735(d) of the Act, we have notified the International Trade Commission (ITC) of our final determination. As our final determination is affirmative, the ITC will determine within 45 days whether imports of the subject merchandise are causing material injury, or threat of material injury, to an industry in the United States. If the ITC determines that material injury or threat of injury does not exist, the proceeding will be terminated and all securities posted will be refunded or canceled. If the ITC determines that such injury does exist, the Department will issue an antidumping duty order directing CBP to assess antidumping duties on all imports of the subject merchandise entered, or withdrawn from warehouse, for consumption on or after the effective date of the suspension of liquidation.

Return or Destruction of Proprietary Information

This notice will serve as the only reminder to parties subject to administrative protective order (APO) of their responsibility concerning the destruction of proprietary information disclosed under APO in accordance with 19 CFR 351.305(a)(3). Timely written notification of return/destruction of APO materials or conversion to judicial protective order is hereby requested. Failure to comply with the regulations and the terms of an APO is a sanctionable violation.

We are issuing and publishing this determination and notice in accordance with sections 735(d) and 777(i) of the Act.

Dated: April 6, 2009.

Ronald K. Lorentzen,

Acting Assistant Secretary for Import Administration.

Appendix--Issues in Decision Memo

Comments

Comment 1: Date of Sale and Whether to Exclude U.S. Sales Made Pursuant to Multiyear Contracts
Comment 2: Indirect Selling Expenses
Comment 3: Home Market Billing Adjustments
Comment 4: Currency Conversions Reported for Certain Home Market Sales Prices and U.S. Freight Expenses
Comment 5: Electricity Purchased from an Affiliate
Comment 6: General and Administrative (G&A) Expense Ratio

[FR Doc. E9–8357 Filed 4–10–09; 8:45 am]

BILLING CODE: 3510–DS–S

DEPARTMENT OF COMMERCE

Bureau of the Census

2010 Census Advisory Committee

AGENCY: Bureau of the Census, Department of Commerce.

ACTION: Notice of public meeting.

SUMMARY: The Bureau of the Census (U.S. Census Bureau) is giving notice of a meeting of the 2010 Census Advisory Committee. The Committee will address policy, research, and technical issues related to 2010 Decennial Census Programs. Last-minute changes to the agenda are possible, which could prevent giving advance notification of schedule changes.

DATES: May 7–8, 2009. On May 7, the meeting will begin at approximately

8:30 a.m. and end at approximately 5 p.m. On May 8, 2009, the meeting will begin at approximately 8:30 a.m. and end at approximately 2:15 p.m.

ADDRESSES: The meeting will be held at the Census Bureau Auditorium and Conference Center, 4600 Silver Hill Road, Suitland, Maryland 20746.

FOR FURTHER INFORMATION CONTACT: Jeri Green, Committee Liaison Officer, Department of Commerce, U.S. Census Bureau, Room 8H182, 4600 Silver Hill Road, Suitland, Maryland 20746, telephone 301–763–6590. For TTY callers, please use the Federal Relay Service 1–800–877–8339.

SUPPLEMENTARY INFORMATION: The 2010 Census Advisory Committee is composed of a Chair, Vice-Chair, and 20 member organizations—all appointed by the Secretary of Commerce. The Committee considers the goals of the decennial census, including the American Community Survey and related programs, and users' needs for information provided by the decennial census from the perspective of outside data users and other organizations having a substantial interest and expertise in the conduct and outcome of the decennial census. The Committee has been established in accordance with the Federal Advisory Committee Act (Title 5, United States Code, Appendix 2, Section10(a)(b)).

A brief period will be set aside at the meeting for public comment. However, individuals with extensive statements for the record must submit them in writing to the Census Bureau Committee Liaison Officer named above at least three working days prior to the meeting. Seating is available to the public on a first-come, first-served basis.

The meeting is physically accessible to people with disabilities. Requests for sign language interpretation or other auxiliary aids should be directed to the Census Bureau Committee Liaison Officer as soon as known, and preferably two weeks prior to the meeting.

Due to increased security and for access to the meeting, please call 301–763–3231 upon arrival at the Census Bureau on the day of the meeting. A photo ID must be presented in order to receive your visitor's badge. Visitors are not allowed beyond the first floor.

Dated: April 6, 2009.

Thomas L. Mesenbourg,

Acting Director, Bureau of the Census.

[FR Doc. E9–8256 Filed 4–10–09; 8:45 am]

BILLING CODE 3510–07–P

DEPARTMENT OF COMMERCE

National Oceanic and Atmospheric Administration

RIN 0648–XO53

Caribbean Fishery Management Council; Scoping Meetings

AGENCY: National Marine Fisheries Service (NMFS), National Oceanic and Atmospheric Administration (NOAA), Commerce.

ACTION: Notice of Scoping Meetings.

SUMMARY: The Caribbean Fishery Management Council will hold scoping meetings to obtain input from fishers, the general public, and the local agencies representatives on the Document for Amendment 2 to the Fishery Management Plan for the Queen Conch Fishery of Puerto Rico and the U.S. Virgin Islands and Amendment X to the Reef Fish Fishery Management Plan of Puerto Rico and the U.S. Virgin Islands (Including the Final Environmental Impact Statement, Regulatory Impact Review, and Initial Regulatory Flexibility Analysis).

DATES AND ADDRESSES: The scoping meetings will be held on the following dates and locations:

April 27, 2009, DoubleTree by Hilton San Juan, De Diego Avenue, San Juan, Puerto Rico

April 28, 2009, Holiday Inn and Tropical Casino Ponce, 3315 Ponce By Pass, Ponce, Puerto Rico

April 29, 2009, Salón B, Centro de Usos Múltiples, Doctor López and Celís Aguilera St., Fajardo, Puerto Rico

May 4, 2009, Mayaguez Resort and Casino, Rd. 104, Km. 0.3, Mayaguez, Puerto Rico

May 6, 2009, Community Center, Frenchtown, St. Thomas, U.S. Virgin Islands

May 7, 2009, The Florence Williams Public Library, 1122 King Street, Christiansted, St. Croix, U.S. Virgin Islands.

All meetings will be held from 7:00 p.m. to 10:00 p.m.

FOR FURTHER INFORMATION CONTACT: Caribbean Fishery Management Council, 268 Muñoz Rivera Avenue, Suite 1108, San Juan, Puerto Rico 00918–1920, telephone (787) 766–5926.

SUPPLEMENTARY INFORMATION: The Caribbean Fishery Management Council will hold Scoping meetings to receive public input on the following management alternatives:

4.0 MANAGEMENT ALTERNATIVES

The Management Alternatives for setting Annual Catch Limits (ACLs) for 4 species and species groups are presented below. The species groups for which Annual Catch Limits have to be set by 2010 are shown in the table below and include the Snapper Unit 1, Grouper Unit 4, parrotfish and queen conch. One species not discussed in the actions is Nassau grouper, which is undergoing overfishing and therefore, would require an ACL by 2010. No action is discussed for Nassau grouper because current regulations exist which prohibit the take of Nassau grouper in the U.S. Caribbean (both from the EEZ and state waters). Because of this prohibition on take, no further action is required to end or prevent overfishing. Similar to Nassau grouper, queen conch management alternatives are only discussed for the fishery in St. Croix. This is a result of current regulations in the U.S. Caribbean which prohibit the take of queen conch in the EEZ off Puerto Rico and St. Thomas/St. John.

Other actions among the Management Alternatives include methods for modifying the reef fish FMU, setting recreational ACLs, methods for accounting for uncertainty, alternative methods for setting ACLs based on proxies for reducing fishing mortality, accountability measures, monitoring and enforcement, permits, and allowable fishing gear.

4.1 Action 1: Amending the Stock Complexes in the Reef Fish Fishery Management Unit

Alternative 1. No Action. Do not change the stock complexes in the Reef Fish FMU

Alternative 2. Modify the FMU by:

Sub-alternative A. Separating the Parrotfish Unit into 2 complexes. Parrotfish Unit 1 would include princess, queen, redfin, redtail, stoplight, redband, and striped parrotfishes and Parrotfish Unit 2 would include blue, midnight, and rainbow parrotfishes

Sub alternative B. Separate Grouper Unit 4 into 2 complexes and add black grouper to Grouper Unit 4. Grouper Unit 4 would include yellowfin, red, tiger, and black grouper and Grouper Unit 5 would include yellowedge and misty grouper.

Sub alternative C. Add cardinal snapper (*Pristipomoides macrophthalmus*) to Snapper Unit 2 (with the queen snapper) and move wenchman (*Pristopomoides aquilonaris*) into Snapper Unit 1.

Alternative 3. Examine reef fish FMU and reassign species not targeted, retained, sold, or used for personal consumption as ecosystem component species.

Complex	Current	Proposed
Snapper Unit 1	Silk Black Blackfin Vermilion	Silk Black Blackfin Vermilion Wenchman (*Pristopomoides aquilonaris*)
Snapper Unit 2	Queen Wenchman (*Pristopomoides aquilonaris*)	Queen Cardinal (*Pristopomoides macrophthalmus*)
Snapper Unit 3	Gray Lane Mutton Dog Schoolmaster Mahogany	Gray Lane Mutton Dog Schoolmaster Mahogany
Snapper Unit 4	Yellowtail Snapper	Yellowtail Snapper
Grouper Unit 3	Red hind Coney Rock hind Graysby Creole-fish	Red hind Coney Rock hind Graysby
Grouper Unit 4	Yellowfin Red Tiger Yellowedge Misty	Yellowfin Red Tiger Black
Grouper Unit 5		Yellowedge Misty
Parrotfish	Blue Midnight Princess Queen Rainbow Redfin Redtail Stoplight Redband Striped	Princess Queen Redfin Redtail Stoplight Redband Striped
Parrotfish Unit 2		Blue Midnight Rainbow

4.2 Action 2: Annual Catch Limits for queen conch (Strombus gigas) off St. Croix

Alternative 1. Do not set an ACL for queen conch off St. Croix

Alternative 2. Set the ACL for queen conch off St. Croix equal to:

Sub alternative A. Zero for the EEZ and do not establish a state water ACL.

Sub alternative B. The average landings during 1994–2006 = 90,000 pounds. The ACL would include both state and federal water landings.

Sub alternative C. The current allowable catch level established by the U.S.V.I. government for St. Croix = 50,000 pounds. The ACL would include both state and federal water landings. The season for queen conch would run from November 1 - June 30, or until such time the ACL is met; additionally, there would be a 200 conch per boat limit.

Sub alternative D. Zero in the EEZ. The state waters ACL would be set equal to the current allowable catch level established by the U.S.V.I. government for St. Croix = 50,000 pounds.

4.3 Action 3: Annual Catch Limits for Parrotfish Unit 1 and Parrotfish Unit 2

Alternative 1. No Action.

Sub Alternative A. Do not set an ACL for Parrotfish Unit 1 or Parrotfish Unit 2.

Sub Alternative B. Do not establish an ACL for Parrotfish Unit 2, but include Parrotfish Unit 2 in the ACL for Parrotfish Unit 1.

Alternative 2. For Parrotfish Unit 2:

Sub alternative A. Set the ACL equal to zero in the EEZ and do not establish a state water ACL but rely on the data collection program described later in this document and revisit ACL for parrotfish 5 years after implementation.

Sub alternative B. Set the ACL equal to zero in the EEZ and recommend to Puerto Rico and the U.S.V.I. that the ACL be set equal to zero in state waters.

Alternative 3. Set the ACL for Parrotfish Unit 1 off Puerto Rico equal to:

Sub alternative A. Zero for the EEZ and do not establish a state water ACL, but rely on the data collection program described later in this document and revisit ACL for parrotfish five years after implementation.

Sub alternative B. The average landings during 1999–2006 = 80,000 pounds (ACLG February 2009 recommendation)

Sub alternative C. The average landings during 1994–2006 multiplied

by an uncertainty scalar (see Action 7 for uncertainty scalar).

Alternative 4. Set the ACL for Parrotfish Unit 1 off St. Thomas/St. John equal to:

Sub alternative A. Zero for the EEZ and do not establish a state water ACL, but rely on the data collection program described later in this document and revisit ACL for parrotfish five years after implementation.

Sub alternative B. The average landings during 1999–2006 = 50,000 pounds (ACLG February 2009 recommendation)

Sub alternative C. The average landings during 1994–2006 multiplied by an uncertainty scalar (see Action 7 for uncertainty scalar).

Alternative 5. Set the ACL for Parrotfish Unit1 off St. Croix equal to:

Sub alternative A. Zero for the EEZ and do not establish a state water ACL, but rely on the data collection program described later in this document and revisit ACL for parrotfish five years after implementation.

Sub alternative B. The average landings during 1999–2006 = 250,000 pounds (ACLG February 2009 recommendation)

Sub alternative C. The average landings during 1994–2006 multiplied by an uncertainty scalar (see Action 7 for uncertainty scalar).

Sub alternative D. The average landings during 1976–1990 = 82,000 pounds (discussed at the ACLG and SSCFebruary 2009 meeting).

Sub alternative E. The average landings during 1983–1990 = 82,000 pounds (SEFSC recommended time frame for pre-gillnet fishery).

Alternative 6. Set the ACL for Parrotfish Unit1 in the U.S. Caribbean equal to:

Sub alternative A. Zero for the EEZ and do not establish a state water ACL, but rely on the data collection program described later in this document and revisit ACL for parrotfish five years after implementation.

Sub alternative B. The average landings during 1999–2006 = 380,000 pounds

Sub alternative C. The average landings during 1994–2006 multiplied by an uncertainty scalar (see Action 7 for uncertainty scalar).

4.4 Action 4: Annual Catch Limits for Grouper Unit 4

Alternative 1. No Action. Do not set an ACL for Grouper Unit 4

Alternative 2. Set the ACL for Grouper Unit 4 off Puerto Rico equal to:

Sub alternative A. Zero in the EEZ and do not establish a state water ACL, but rely on the data collection program described later in this document and revisit ACL for Grouper Unit 4 five years after implementation.

Sub alternative B. The average corrected landings for identified Grouper Unit 4 species during 1994–2006 = 10,000 pounds. The ACL would include both state and federal water landings.

Sub alternative C. The average corrected landings for identified Grouper Unit 4 species during 1994–2006 plus the average proportional corrected landings estimate for Grouper Unit 4 species landed in the generic ''Sea Basses'' category during 1994–2006 = 15,000 pounds.

Sub alternative D. A sufficient level of catch for collecting needed data on the fishery. This catch level would be established by SEFSC, in cooperation with Puerto Rico, for purposes of scientific data collection.

Alternative 3. Set the ACL for Grouper off St. Thomas/St. John at:

Sub alternative A. Zero for the EEZ off St. Thomas/St. John and do not establish a state water ACL, but rely on the data collection program described later in this document and revisit ACL for Grouper Unit 4 five years after implementation.

Sub alternative B. The average landings during 1994 - 2006 for all grouper species = 61,000 pounds as part of a grouper ACL

Sub alternative C. The average landings during 1994 - 2006 for all grouper species multiplied by an uncertainty scalar (see Action 7 for uncertainty scalar).

Alternative 4. Set the ACL for grouper off St. Croix at:

Sub alternative A. Zero for the EEZ off St. Croix and do not establish a state water ACL, but rely on the data collection program described later in this document and revisit ACL for Grouper Unit 4 five years after implementation.

Sub alternative B. The average landings during 1994 - 2006 for all grouper species = 32,000 pounds as part of a grouper ACL

Sub alternative C. The average landings during 1994 - 2006 for all grouper species multiplied by an uncertainty scalar (see Action 7 for uncertainty scalar).

Alternative 5. Set the ACL for grouper in the U.S. Caribbean equal to:

Sub alternative A. Zero for the EEZ and do not establish a state water ACL, but rely on the data collection program described later in this document and revisit ACL for parrotfish five years after implementation.

Sub alternative B. The average landings during 1999–2006 = 203,000 pounds

Sub alternative C. The average landings during 1994–2006 multiplied by an uncertainty scalar (see Action 7 for uncertainty scalar).

4.5 Action 5: Annual Catch Limits for Snapper Unit 1

Alternative 1. No Action. Do not set an ACL for Snapper Unit 1

Alternative 2. Set the ACL for Snapper Unit 1 off Puerto Rico equal to:

Sub alternative A. Zero for the EEZ and do not establish a state waters ACL, but rely on the data collection program described later in this document and revisit ACL for Snapper Unit 1 five years after implementation.

Sub alternative B. The average corrected landings for identified Snapper Unit 1 species during 1999–2006 = 300,000 pounds

Sub alternative C. The average corrected landings for identified silk snapper during 1999–2006 = 200,000 pounds for silk snapper. Silk snapper would be the indicator species for Snapper Unit 1.

Sub alternative D. The Average landings for 1999–2006 for the current Snapper Unit 1 plus the average landings for wenchman for 1999–2006 = 300,000 pounds

Sub alternative E. The Average landings for 1994–2006 for the current Snapper Unit 1 plus the average landings for wenchman for 1994–2006 = 355,000 pounds

Sub alternative F. The average 1999–2006 landings for identified Snapper Unit 1 species plus the average landings for wenchman during 1999–2006 plus the average proportional corrected landings estimate for Snapper Unit 1 species landed in the generic ''Snapper'' category during 1999–2006 = 316,000 pounds.

Sub alternative G. The average 1994–2006 landings for identified Snapper Unit 1 species plus the average landings for wenchman during 1994–2006 plus the average proportional corrected landings estimate for Snapper Unit 1 species landed in the generic ''Snapper'' category during 1994–2006 = 374,000 pounds.

Sub alternative H. 1.2 times the value selected from sub alternative B-G.

Alternative 3. Set the ACL for snapper off St. Thomas/St. John at:

Sub alternative A. Zero for the EEZ off St. Thomas/St. John and do not establish a state waters ACL, but rely on the data collection program described later in this document and revisit ACL for Snapper Unit 1 five years after implementation.

Sub alternative B. The average landings during 1994 - 2006 for all snapper species =160,000 pounds as part of a Snapper ACL

Sub alternative C. The average landings during 1994 - 2006 for all snapper species multiplied by an uncertainty scalar (see Action 7 for uncertainty scalar).

Alternative 4. Set the ACL for snapper off St. Croix at:

Sub alternative A. Zero for the EEZ off St. Croix and do not establish a state waters ACL, but rely on the data collection program described later in this document and revisit ACL for Snapper Unit 1 five years after implementation.

Sub alternative B. The average landings during 1994 - 2006 for all snapper species =112,000 pounds

Sub alternative C. The average landings during 1994 - 2006 for all grouper species multiplied by an uncertainty scalar (see Action 7 for uncertainty scalar).

Alternative 5. Set the ACL for snapper in the U.S. Caribbean equal to:

Sub alternative A. Zero for the EEZ off St. Croix and do not establish a state waters ACL, but rely on the data collection program described later in this document and revisit ACL for Snapper Unit 1 five years after implementation.

Sub alternative B. The average landings during 1994 - 2006 for all snapper species =1,529,000 pounds

Sub alternative C. The average landings during 1994 - 2006 for all snapper species multiplied by an uncertainty scalar (see Action 7 for uncertainty scalar).

4.6 Action 6: Annual Catch Limits for the Recreational Sector

Alternative 1. No Action. Do not set ACLs for the Recreational Sector

Alternative 2. Use Puerto Rico recreational average landings data from MRFSS during 2000–2007 to set recreational ACLs in the EEZ and state waters of Puerto Rico for Snapper Unit 1, Grouper Unit 4, and Parrotfishes. Use the proportion of Puerto Rican recreational landings relative to the total of recreational and commercial Puerto Rican landings to set an ACL proxy in the EEZ and state waters for the USVI Recreational Fishery. For the USVI, proportions would be assigned to fish family (e.g., groupers, snappers, parrotfishes), until sufficient landings data are available to specify ACLs by unit. ACLs would equal zero for queen conch in the EEZ off St. Thomas/St. John and Puerto Rico; the recreational ACL for queen conch in the EEZ off St. Croix would be XXX (will depend on Council's choice for commercial ACL in St. Croix). All island based recreational ACLs for Nassau grouper would equal zero.

Alternative 3. Use Puerto Rico recreational average landings data from MRFSS during 2000–2007 to set recreational ACLs in the EEZ and state waters for Snapper Unit 1, Grouper Unit 4, and Parrotfishes. Use the proportion of Puerto Rican recreational landings relative to the total of recreational and commercial Puerto Rican landings to set an ACL proxy in the EEZ.

Alternative 4. Do not establish a recreational ACL in the USVI EEZ and state waters, but use the Commercial ACL for each unit or family as a proxy for the ACL for all sectors in the fishery.

Alternative 5. Set the recreational ACL in the USVI equal to 10% of each islands commercial ACL.

Alternative 6. Establish a separate charter boat sector ACL based on MRFSS data for Puerto Rico.

4.7 Action 7: Accounting for Uncertainty

Alternative 1. No Action. Set the ACL at the level specified in the previous actions

Alternative 2. In the USVI, for ACLs based on average catch, use:

Sub alternative A. 90% of the specified level in the previous actions to adjust for uncertainty.

Sub alternative B. 75% of the specified level in the previous actions to adjust for uncertainty (recommendation from the national SSC meeting).

Sub alternative C. 70% of the specified level in the previous actions to adjust for uncertainty.

Sub Alternative D. 50% of the specified level in the previous actions to adjust for uncertainty (recommendation from the national SSC meeting).

Alternative 3. In Puerto Rico, use:

Sub alternative A. 82% of the specified level in the previous actions to adjust for uncertainty (based on the ratio of the reported landings versus the 85% CI for calculated landings in Puerto Rico across all species groups by year).

Sub alternative B. 78% of the specified level in the previous actions to adjust for uncertainty (based on the ratio of the reported landings versus the 90% CI for calculated landings in Puerto Rico across all species groups by year).

Sub alternative C. 75% of the specified level in the previous actions to adjust for uncertainty (based on the ratio of the reported landings versus the 95% CI for calculated landings in Puerto Rico across all species groups by year).

4.8 Action 8: Alternative Methods for Reducing Fishing Mortality and Establishing ACL Proxies

Alternative 1. No Action. Do not implement alternative methods for reducing fishing mortality by establishing proxies for ACLs

Alternative 2. Extend Area Closures in the U.S. Caribbean EEZ to account for 40% of fishable bottom in the EEZ

Alternative 3. Extend Area Closures in the U.S. Caribbean EEZ to account for 30% of fishable bottom in the EEZ

Alternative 4. Extend Area Closures in the U.S. Caribbean EEZ to account for XX% of fishable bottom in the EEZ as determined by the SEFSC

Alternative 5. Work with fishermen to develop measure to reduce fishing effort towards F=Fmsy.

4.9 Action 9: Permits

Alternative 1. No Action. Do not establish a permit system for fishing in the EEZ

Alternative 2. Require a federal permit for fishing in the EEZ.

Sub Alternative A. Require a federal permit for recreational fishing in the EEZ.

Sub Alternative B. Require a federal permit for commercial fishing in the EEZ.

Sub Alternative C. Require the use of trap tags for all (lobster and fish) trap fisheries in the EEZ.

Sub Alternative D. Require a federal permit for charter boats fishing in the EEZ.

Alternative 3. Require a federal permit to sell Council managed species.

Alternative 4. Require a federal permit to purchase Council managed species.

4.10 Action 10: Monitoring and Enforcement of Annual Catch Limits

Alternative 1. No Action. Set the ACL at the level specified in the previous actions.

Alternative 2. Require any person landing Council managed species to submit an appropriate data collection form, as developed by the SEFSC or the Council's SSC, after every trip with enough detail such that CPUE per species can be calculated for each gear.

Alternative 3. Require any federal permit holder to submit an appropriate data collection form, as developed by the SEFSC or the Council's SSC, after every trip with enough detail such that CPUE per species can be calculated for each gear.

Alternative 4. Develop an updated catch report form in coordination with the SEFSC, local and territorial governments, fishermen, and the Council's SSC which has enough detail

such that CPUE per species can be calculated for each gear.

4.11 Action 11: Accountability Measures

Alternative 1. No Action. Do not establish Accountability Measures.

Alternative 2. Implement accountability measures for exceeding an ACL based on:

Sub alternative A. A single year of landings/catch.

Sub alternative B. A 2-year average of landings/catch.

Sub alternative C. A 3-year average of landings/catch.

Alternative 3. Reduce the fishing season in the following year by a length determined to be appropriate to account for exceeding the ACL.

Alternative 4. Increase the size of closed areas as identified in Action 9 by an appropriate amount to account for exceeding the ACL.

Alternative 5. For queen conch exceedences in St. Croix, close the EEZ to queen conch harvest.

Alternative 6. Reduce the ACL in the subsequent fishing year by an amount equal to an overage in the previous year.

4.12 Action 12: Allowable Gear for Reef Fish

Alternative 1. No Action. Do not alter allowable gear in the U.S. Caribbean

Alternative 2. Review the list of allowable gear under 50 CFR 600.725

4.13 Action 13: Establish Framework Measures for ACLs and AMs in the Reef Fish FMP.

Alternative 1. No Action. Do not establish a framework for ACLs and AMs

Alternative 2. Establish a framework procedure for setting and adjusting ACLs and AMs

Special Accommodations

These meetings are physically accessible to people with disabilities. For more information or request for sign language interpretation and other auxiliary aids, please contact Mr. Miguel A. Rolón, Executive Director, Caribbean Fishery Management Council, 268 Muñoz Rivera Avenue, Suite 1108, San Juan, Puerto Rico, 00918–1920, telephone (787) 766–5926, at least five days prior to the meeting date.

Dated: April 8, 2009

Tracey L. Thompson,

Acting Director, Office of Sustainable Fisheries, National Marine Fisheries Service.

[FR Doc. E9–8364 Filed 4–10–09; 8:45 am]

BILLING CODE 3510–22–S

COMMISSION OF FINE ARTS

Notice of Meeting

The next meeting of the U.S. Commission of Fine Arts is scheduled for 16 April 2009, at 10 a.m. in the Commission offices at the National Building Museum, Suite 312, Judiciary Square, 401 F Street, NW., Washington DC, 2000 1–2728. Items of discussion may include buildings, parks and memorials.

Draft agendas and additional information regarding the Commission are available on our Web site: *http://www.cfa.gov*. Inquiries regarding the agenda and requests to submit written or oral statements should be addressed to Thomas Luebke, Secretary, U.S. Commission of Fine Arts, at the above address or call 202–504–2200. Individuals requiring sign language interpretation for the hearing impaired should contact the Secretary at least 10 days before the meeting date.

Dated 31 March 2009 in Washington, DC.

Thomas Luebke,

AIA, Secretary.

[FR Doc. E9–8346 Filed 4–10–09; 8:45 am]

BILLING CODE 6330–01–M

DEPARTMENT OF ENERGY

Federal Energy Regulatory Commission

Combined Notice of Filings

April 7, 2009.

Take notice that the Commission has received the following Natural Gas Pipeline Rate and Refund Report filings:

Docket Numbers: RP99–301–235.
Applicants: ANR Pipeline Company.
Description: ANR Pipeline Company submits Rate Schedule FSS negotiated rate agreement between ANR and Wisconsin Public Service Corporation.
Filed Date: 04/03/2009.
Accession Number: 20090406–0093.
Comment Date: 5 p.m. Eastern Time on Wednesday, April 15, 2009.

Docket Numbers: RP09–222–001.
Applicants: ANR Pipeline Company.
Description: ANR Pipeline Company submits Substitute Ninth Revised Sheet No 159 to FERC Gas Tariff, Second Revised Volume No 1.
Filed Date: 04/03/2009.
Accession Number: 20090406–0092.
Comment Date: 5 p.m. Eastern Time on Wednesday, April 15, 2009.

Docket Numbers: RP09–389–001.
Applicants: Steckman Ridge, LP.
Description: Steckman Ridge, LP submits Sheet No 66 *et al.* to FERC Gas Tariff, Original Volume No 1.
Filed Date: 04/03/2009.
Accession Number: 20090406–0094.
Comment Date: 5 p.m. Eastern Time on Wednesday, April 15, 2009.

Docket Numbers: RP09–428–001.
Applicants: ANR Pipeline Company
Description: ANR Pipeline Company submits Twenty Seventh Revised Sheet No 19 to FERC Gas Tariff, Second Volume No 1.
Filed Date: 04/02/2009.
Accession Number: 20090406–0095.
Comment Date: 5 p.m. Eastern Time on Tuesday, April 14, 2009.

Docket Numbers: RP09–463–000.
Applicants: CenterPoint Energy Gas Transmission Co.
Description: CenterPoint Energy Gas Transmission Company submits Nineteenth Revised Sheet 17 *et al.* to FERC Gas Tariff, Sixth Revised Volume 1, to be effective 5/1/09.
Filed Date: 03/20/2009.
Accession Number: 20090323–0035.
Comment Date: 5 p.m. Eastern Time on Friday, April 10, 2009.

Docket Numbers: RP09–500–000.
Applicants: Florida Gas Transmission Company, LLC.
Description: Florida Gas Transmission Company, LLC submits First Revised Sheet No 2 *et al.* to FERC Gas Tariff, Fourth Revised Volume No 1.
Filed Date: 04/03/2009.
Accession Number: 20090406–0096.
Comment Date: 5 p.m. Eastern Time on Wednesday, April 15, 2009.

Any person desiring to intervene or to protest in any of the above proceedings must file in accordance with Rules 211 and 214 of the Commission's Rules of Practice and Procedure (18 CFR 385.211 and 385.214) on or before 5 p.m. Eastern time on the specified comment date. It is not necessary to separately intervene again in a subdocket related to a compliance filing if you have previously intervened in the same docket. Protests will be considered by the Commission in determining the appropriate action to be taken, but will not serve to make protestants parties to the proceeding. Anyone filing a motion to intervene or protest must serve a copy of that document on the Applicant. In reference to filings initiating a new proceeding, interventions or protests submitted on or before the comment deadline need not be served on persons other than the Applicant.

The Commission encourages electronic submission of protests and interventions in lieu of paper, using the FERC Online links at *http://www.ferc.gov*. To facilitate electronic service, persons with Internet access who will eFile a document and/or be listed as a contact for an intervenor

must create and validate an eRegistration account using the eRegistration link. Select the eFiling link to log on and submit the intervention or protests.

Persons unable to file electronically should submit an original and 14 copies of the intervention or protest to the Federal Energy Regulatory Commission, 888 First St., NE., Washington, DC 20426.

The filings in the above proceedings are accessible in the Commission's eLibrary system by clicking on the appropriate link in the above list. They are also available for review in the Commission's Public Reference Room in Washington, DC. There is an eSubscription link on the Web site that enables subscribers to receive e-mail notification when a document is added to a subscribed docket(s). For assistance with any FERC Online service, please e-mail *FERCOnlineSupport@ferc.gov.* or call (866) 208–3676 (toll free). For TTY, call (202) 502–8659.

Nathaniel J. Davis, Sr.,

Deputy Secretary.

[FR Doc. E9–8257 Filed 4–10–09; 8:45 am]

BILLING CODE 6717–01–P

DEPARTMENT OF ENERGY

Federal Energy Regulatory Commission

Combined Notice of Filings

April 6, 2009.

Take notice that the Commission has received the following Natural Gas Pipeline Rate and Refund Report filings:

Docket Numbers: RP96–272–090.
Applicants: Northern Natural Gas Company.
Description: Northern Natural Gas Company submits Sixth Revised Sheet 66B.01a *et al.* of its FERC Gas Tariff, Fifth Revised Volume 1, to be effective 4/2/09.
Filed Date: 04/01/2009.
Accession Number: 20090402–0160.
Comment Date: 5 p.m. Eastern Time on Monday, April 13, 2009.

Docket Numbers: RP96–200–206.
Applicants: CenterPoint Energy Gas Transmission Co.
Description: CenterPoint Energy Gas Transmission Co submits an amended negotiated rate agreement with Laclede Energy Resources, Inc.
Filed Date: 04/01/2009.
Accession Number: 20090402–0165.
Comment Date: 5 p.m. Eastern Time on Monday, April 13, 2009.

Docket Numbers: RP96–200–207.
Applicants: CenterPoint Energy Gas Transmission Co.
Description: CenterPoint Energy Gas Transmission Company submits negotiated rate agreement between CEGT and Macquarie Cook Energy, LLC.
Filed Date: 04/01/2009.
Accession Number: 20090402–0164.
Comment Date: 5 p.m. Eastern Time on Monday, April 13, 2009.

Docket Numbers: RP96–200–208.
Applicants: CenterPoint Energy Gas Transmission Co.
Description: CenterPoint Energy Gas Transmission Company submits negotiated rate agreement with Cross Timbers Energy Service Inc *et al.*
Filed Date: 04/01/2009.
Accession Number: 20090402–0163.
Comment Date: 5 p.m. Eastern Time on Monday, April 13, 2009.

Docket Numbers: RP99–301–234.
Applicants: ANR Pipeline Company.
Description: ANR Pipeline Co submits Rate Schedule FTS–1 negotiated rate agreement with Merrill Lynch Commodities, Inc.
Filed Date: 04/01/2009.
Accession Number: 20090402–0167.
Comment Date: 5 p.m. Eastern Time on Monday, April 13, 2009.

Docket Numbers: RP00–426–044.
Applicants: Texas Gas Transmission. LLC.
Description: Texas Gas Transmission, LLC submits First Revised Sheet No. 51 *et al.* to FERC Gas Tariff, Third Revised Volume No. 1.
Filed Date: 04/01/2009.
Accession Number: 20090402–0168.
Comment Date: 5 p.m. Eastern Time on Monday, April 13, 2009.

Docket Numbers: RP09–283–002.
Applicants: Iroquois Gas Transmission System, LP.
Description: Iroquois Gas Transmission System, LP submits Substitute Ninth Revised Sheet No. 92 *et al.* to FERC Gas Tariff, First Revised Volume No. 1.
Filed Date: 04/02/2009.
Accession Number: 20090403–0087.
Comment Date: 5 p.m. Eastern Time on Tuesday, April 14, 2009.

Docket Numbers: RP09–466–001.
Applicants: Kern River Gas Transmission Company.
Description: Kern River Gas Transmission Company submits First Revised Ninth Revised Sheet 71 *et al.* to FERC Gas Tariff, Second Revised Volume 1.
Filed Date: 04/01/2009.
Accession Number: 20090402–0166.
Comment Date: 5 p.m. Eastern Time on Monday, April 13, 2009.

Docket Numbers: RP09–495–000.
Applicants: Northern Natural Gas Company.
Description: Petition of Northern Gas Company for a limited waiver of tariff provisions.
Filed Date: 04/01/2009.
Accession Number: 20090402–0162.
Comment Date: 5 p.m. Eastern Time on Monday, April 13, 2009.

Docket Numbers: RP09–496–000.
Applicants: Gulf Crossing Pipeline Company LLC.
Description: Gulf Crossing Pipeline Company, LLC submits Interim Negotiated Rate Agreements.
Filed Date: 04/01/2009.
Accession Number: 20090402–0161.
Comment Date: 5 p.m. Eastern Time on Monday, April 13, 2009.

Docket Numbers: RP09–497–000.
Applicants: Natural Gas Pipeline Company of America.
Description: Natural Gas Pipeline Co of America LLC submits the Penalty Revenue Crediting Report.
Filed Date: 04/02/2009.
Accession Number: 20090402–0178.
Comment Date: 5 p.m. Eastern Time on Tuesday, April 14, 2009.

Docket Numbers: RP09–498–000.
Applicants: Dominion Cove Point LNG, LP.
Description: Dominion Cove Point LNG, LP submits Fifth Revised Sheet No 1 *et al.* to FERC Gas Tariff, Original Volume No 1.
Filed Date: 04/02/2009.
Accession Number: 20090403–0086.
Comment Date: 5 p.m. Eastern Time on Tuesday, April 14, 2009.

Any person desiring to intervene or to protest in any of the above proceedings must file in accordance with Rules 211 and 214 of the Commission's Rules of Practice and Procedure (18 CFR 385.211 and 385.214) on or before 5 p.m. Eastern time on the specified comment date. It is not necessary to separately intervene again in a subdocket related to a compliance filing if you have previously intervened in the same docket. Protests will be considered by the Commission in determining the appropriate action to be taken, but will not serve to make protestants parties to the proceeding. Anyone filing a motion to intervene or protest must serve a copy of that document on the Applicant. In reference to filings initiating a new proceeding, interventions or protests submitted on or before the comment deadline need not be served on persons other than the Applicant.

The Commission encourages electronic submission of protests and interventions in lieu of paper, using the FERC Online links at *http://www.ferc.gov.* To facilitate electronic service, persons with Internet access who will eFile a document and/or be

listed as a contact for an intervenor must create and validate an eRegistration account using the eRegistration link. Select the eFiling link to log on and submit the intervention or protests.

Persons unable to file electronically should submit an original and 14 copies of the intervention or protest to the Federal Energy Regulatory Commission, 888 First St., NE., Washington, DC 20426.

The filings in the above proceedings are accessible in the Commission's eLibrary system by clicking on the appropriate link in the above list. They are also available for review in the Commission's Public Reference Room in Washington, DC. There is an eSubscription link on the Web site that enables subscribers to receive e-mail notification when a document is added to a subscribed docket(s). For assistance with any FERC Online service, please e-mail *FERCOnlineSupport@ferc.gov*. or call (866) 208–3676 (toll free). For TTY, call (202) 502–8659.

Nathaniel J. Davis, Sr.,

Deputy Secretary.

[FR Doc. E9–8258 Filed 4–10–09; 8:45 am]

BILLING CODE 6717–01–P

DEPARTMENT OF ENERGY

Federal Energy Regulatory Commission

Combined Notice of Filings

April 2, 2009.

Take notice that the Commission has received the following Natural Gas Pipeline Rate and Refund Report filings:

Docket Numbers: RP96–359–040.
Applicants: Transcontinental Gas Pipe Line Company,
Description: Transcontinental Gas Pipe Line Company, LLC submits two executed amendments to service agreements containing negotiated rates, all of which pertain to Rate Schedule FT transportation service under Transco's Momentum Expansion Project.
Filed Date: 03/31/2009.
Accession Number: 20090401–0086.
Comment Date: 5 p.m. Eastern Time on Monday, April 13, 2009.

Docket Numbers: RP03–36–043.
Applicants: Dauphin Island Gathering Partners.
Description: Dauphin Island Gathering Partners submits Forty Fourth Revised Sheet 9 *et al.* to its FERC Gas Tariff, First Revised Volume 1 to be effective 4/1/09.
Filed Date: 03/31/2009.
Accession Number: 20090401–0087.
Comment Date: 5 p.m. Eastern Time on Monday, April 13, 2009.

Docket Numbers: RP09–486–000.
Applicants: Northern Border Pipeline Company.
Description: Northern Border Pipeline Company submits Thirteenth Revised Sheet 99 *et al.* to its FERC Gas Tariff, First Revised Volume 1 to be effective 5/1/09.
Filed Date: 03/31/2009.
Accession Number: 20090401–0085.
Comment Date: 5 p.m. Eastern Time on Monday, April 13, 2009.

Docket Numbers: RP09–487–000.
Applicants: High Island Offshore System, LLC.
Description: High Island Offshore System, LLC submits Third Revised Sheet 9 *et al.* to FERC Gas Tariff to become effective 5/1/09.
Filed Date: 03/31/2009.
Accession Number: 20090401–0030.
Comment Date: 5 p.m. Eastern Time on Monday, April 13, 2009.

Docket Numbers: RP09–488–000.
Applicants: ANR Pipeline Company.
Description: ANR Pipeline Co submits Sixteenth Revised Sheet No. 17A *et al.* to FERC Gas Tariff, Second Revised Volume No. 1.
Filed Date: 03/31/2009.
Accession Number: 20090401–0084.
Comment Date: 5 p.m. Eastern Time on Monday, April 13, 2009.

Docket Numbers: RP09–489–000.
Applicants: Columbia Gas Transmission, LLC.
Description: Gas Transmission, LLC submits First Revised Sheet No. 360 *et al.* to FERC Gas Tariff, Third Revised Volume No. 1.
Filed Date: 03/31/2009.
Accession Number: 20090401–0083.
Comment Date: 5 p.m. Eastern Time on Monday, April 13, 2009.

Docket Numbers: RP09–490–000.
Applicants: Columbia Gas Transmission, LLC.
Description: Columbia Gas Transmission, LLC submits non-conforming service agreements with Washington Gas Light Company executed as part of Columbia's Ohio Storage Project.
Filed Date: 03/31/2009.
Accession Number: 20090401–0088.
Comment Date: 5 p.m. Eastern Time on Monday, April 13, 2009.

Docket Numbers: RP09–491–000.
Applicants: East Tennessee Natural Gas, LLC.
Description: East Tennessee Natural Gas, LLC submits the 2007–2008 Cashout Report.
Filed Date: 03/31/2009.
Accession Number: 20090401–0082.
Comment Date: 5 p.m. Eastern Time on Monday, April 13, 2009.

Docket Numbers: RP09–492–000.
Applicants: High Island Offshore System, LLC.
Description: High Island Offshore System, LLC submits Second Revised Sheet No. 1 to FERC Gas Tariff, Third Revised Volume No. 1.
Filed Date: 03/31/2009.
Accession Number: 20090401–0081
Comment Date: 5 p.m. Eastern Time on Monday, April 13, 2009.

Docket Numbers: RP09–493–000.
Applicants: National Fuel Gas Supply Corporation.
Description: National Fuel Gas Supply Corp submits 126th Revised Sheet No.9 to FERC Gas Tariff, Fourth Revised Volume No. 1.
Filed Date: 03/31/2009.
Accession Number: 20090401–0080.
Comment Date: 5 p.m. Eastern Time on Monday, April 13, 2009.

Docket Numbers: RP09–494–000.
Applicants: Pine Needle LNG Company, LLC.
Description: Pine Needle LNG Co, LLC submits Seventeenth Revised Sheet No. 4 to FERC Gas Tariff, Original Volume No. 1.
Filed Date: 03/31/2009.
Accession Number: 20090401–0079.
Comment Date: 5 p.m. Eastern Time on Monday, April 13, 2009.

Any person desiring to intervene or to protest in any of the above proceedings must file in accordance with Rules 211 and 214 of the Commission's Rules of Practice and Procedure (18 CFR 385.211 and 385.214) on or before 5 p.m. Eastern time on the specified comment date. It is not necessary to separately intervene again in a subdocket related to a compliance filing if you have previously intervened in the same docket. Protests will be considered by the Commission in determining the appropriate action to be taken, but will not serve to make protestants parties to the proceeding. Anyone filing a motion to intervene or protest must serve a copy of that document on the Applicant. In reference to filings initiating a new proceeding, interventions or protests submitted on or before the comment deadline need not be served on persons other than the Applicant.

The Commission encourages electronic submission of protests and interventions in lieu of paper, using the FERC Online links at *http://www.ferc.gov*. To facilitate electronic service, persons with Internet access who will eFile a document and/or be listed as a contact for an intervenor must create and validate an eRegistration account using the

eRegistration link. Select the eFiling link to log on and submit the intervention or protests.

Persons unable to file electronically should submit an original and 14 copies of the intervention or protest to the Federal Energy Regulatory Commission, 888 First St. NE., Washington, DC 20426.

The filings in the above proceedings are accessible in the Commission's eLibrary system by clicking on the appropriate link in the above list. They are also available for review in the Commission's Public Reference Room in Washington, DC. There is an eSubscription link on the Web site that enables subscribers to receive e-mail notification when a document is added to a subscribed docket(s). For assistance with any FERC Online service, please e-mail *FERCOnlineSupport@ferc.gov*. or call (866) 208–3676 (toll free). For TTY, call (202) 502–8659.

Nathaniel J. Davis, Sr.

Deputy Secretary.

[FR Doc. E9–8259 Filed 4–10–09; 8:45 am]

BILLING CODE 6717–01–P

DEPARTMENT OF ENERGY

Federal Energy Regulatory Commission

Combined Notice of Filings # 1

April 2, 2009.

Take notice that the Commission received the following electric rate filings:

Docket Numbers: ER08–394–020.
Applicants: Midwest Independent Transmission System Operator, Inc.
Description: Midwest Independent Transmission System Operator, Inc. submits revisions to its Open Access Transmission, Energy and Operating Reserve Markets Tariff to comply with FERC's 2/19/09 Order.
Filed Date: 03/23/2009.
Accession Number: 20090324–0288.
Comment Date: 5 p.m. Eastern Time on Monday, April 13, 2009.

Docket Numbers: ER08–637–008.
Applicants: Midwest Independent Transmission System Operator, Inc.
Description: Midwest Independent Transmission System Operator, Inc. submits Part II Module F to the Open Access Transmission, Energy and Operating Reserve Markets Tariff in compliance with the Commission's 2/19/09 Order.
Filed Date: 03/23/2009.
Accession Number: 20090324–0294.
Comment Date: 5 p.m. Eastern Time on Monday, April 13, 2009.

Docket Numbers: ER09–356–001.
Applicants: ISO New England Inc. and New England Power Pool.
Description: ISO New England Inc and the New England Power Pool submits revisions to Market Rule 1 related to reconfiguration auctions and bilateral contracts in the Forward Capacity Market.
Filed Date: 03/16/2009.
Accession Number: 20090317–0267.
Comment Date: 5 p.m. Eastern Time on Monday, April 13, 2009.

Docket Numbers: ER09–878–000.
Applicants: Entergy Arkansas, Inc.
Description: Entergy Arkansas, Inc submits the 2009 Wholesale Formula Rate Update under ER09–878.
Filed Date: 03/23/2009.
Accession Number: 20090324–0274.
Comment Date: 5 p.m. Eastern Time on Monday, April 13, 2009.

Docket Numbers: ER09–900–000.
Applicants: Victory Garden Phase IV, LLC.
Description: Victory Garden Phase IV, LLC submits authorization to sell energy and capacity at market based rates and workpapers of Julie R Soloman associated with the attached affidavit.
Filed Date: 04/01/2009.
Accession Number: 20090402–0170.
Comment Date: 5 p.m. Eastern Time on Wednesday, April 22, 2009.

Docket Numbers: ER09–901–000.
Applicants: Sky River LLC.
Description: Sky River LLC submits authorization to sell energy and capacity at market based rates and workpapers of Julie R. Soloman associated with the attached affidavit.
Filed Date: 04/01/2009.
Accession Number: 20090402–0171.
Comment Date: 5 p.m. Eastern Time on Wednesday, April 22, 2009.

Docket Numbers: ER09–902–000.
Applicants: FPL Energy Cabazon Wind, LLC.
Description: FPL Energy Cabazon Wind LLC submits authorization to sell energy and capacity at market based rates and workpapers of Julie R Soloman associated with the attached affidavit.
Filed Date: 04/01/2009.
Accession Number: 20090402–0172.
Comment Date: 5 p.m. Eastern Time on Wednesday, April 22, 2009.

Docket Numbers: ER09–903–000; ER09–904–000.
Applicants: PPL New Jersey Solar, LLC; PPL New Jersey Biogas, LLC.
Description: PPL New Jersey Biogas, LLC *et al.* submits Application to Sell Electric Energy, Capacity and Ancillary Services under ER09–904 *et al.*
Filed Date: 03/31/2009.
Accession Number: 20090401–0090.
Comment Date: 5 p.m. Eastern Time on Tuesday, April 21, 2009.

Docket Numbers: ER09–924–000.
Applicants: New England Power Pool.
Description: The New England Power Pool (''NEPOOL'') Participants Committee submits member applications and termination of memberships for Consolidated Hydro New Hampshire, Inc. *et al.*
Filed Date: 03/31/2009.
Accession Number: 20090401–0097.
Comment Date: 5 p.m. Eastern Time on Tuesday, April 21, 2009.

Docket Numbers: ER09–925–000.
Applicants: Entergy Services, Inc.
Description: Entergy Services, Inc *et al.* submits a mutually-executed Dynamic Transfer Operating Agreement.
Filed Date: 03/31/2009.
Accession Number: 20090401–0096
Comment Date: 5 p.m. Eastern Time on Tuesday, April 21, 2009.

Docket Numbers: ER09–926–000.
Applicants: Powerex Corp.
Description: Powerex Corp. submits a new rate schedule, designated as Original Rate Schedule 5m which authorize the sale, *et al.*
Filed Date: 03/31/2009.
Accession Number: 20090401–0094
Comment Date: 5 p.m. Eastern Time on Tuesday, April 21, 2009.

Docket Numbers: ER09–927–000.
Applicants: Allegheny Energy Supply Company, LLC.
Description: Allegheny Energy Supply Co, LLC submits Notices of Termination of Power Sales Agreements.
Filed Date: 03/31/2009.
Accession Number: 20090401–0095.
Comment Date: 5 p.m. Eastern Time on Tuesday, April 21, 2009.

Docket Numbers: ER09–928–000.
Applicants: Southwest Power Pool, Inc.
Description: Southwest Power Pool, Inc. submits Original Service Agreement 1764 to FERC Electric Tariff, Firth Revised Volume 1.
Filed Date: 03/31/2009.
Accession Number: 20090401–0093.
Comment Date: 5 p.m. Eastern Time on Tuesday, April 21, 2009.

Docket Numbers: ER09–929–000.
Applicants: Entergy Services, Inc.
Description: Entergy Operating Companies and Louisiana Generating, LLC submits Fourth Revised Network Integration Transmission Service Agreement.
Filed Date: 03/31/2009.
Accession Number: 20090401–0092.
Comment Date: 5 p.m. Eastern Time on Tuesday, April 21, 2009.

Docket Numbers: ER09–930–000.
Applicants: Entergy Services, Inc.
Description: Entergy Arkansas, Inc submits Fortieth Amendment to the

Power Coordination, Interchange and Transmission Service Agreement *et al.*

Filed Date: 03/31/2009.

Accession Number: 20090401–0091.

Comment Date: 5 p.m. Eastern Time on Tuesday, April 21, 2009.

Docket Numbers: ER09–937–000.

Applicants: Commonwealth Edison Company.

Description: Commonwealth Edison submits updated stated depreciation rate and PBOP expense inputs into Formula Rate.

Filed Date: 04/01/2009.

Accession Number: 20090402–0174.

Comment Date: 5 p.m. Eastern Time on Wednesday, April 22, 2009.

Docket Numbers: ER09–938–000.

Applicants: Central Maine Power Company.

Description: Central Maine Power Company submits proposed revisions to the regional and local formula rates contained in Attachment F and Schedule 21–CMP of Section II of the ISO New England Inc., etc.

Filed Date: 04/01/2009.

Accession Number: 20090402–0173.

Comment Date: 5 p.m. Eastern Time on Wednesday, April 22, 2009.

Any person desiring to intervene or to protest in any of the above proceedings must file in accordance with Rules 211 and 214 of the Commission's Rules of Practice and Procedure (18 CFR 385.211 and 385.214) on or before 5 p.m. Eastern time on the specified comment date. It is not necessary to separately intervene again in a subdocket related to a compliance filing if you have previously intervened in the same docket. Protests will be considered by the Commission in determining the appropriate action to be taken, but will not serve to make protestants parties to the proceeding. Anyone filing a motion to intervene or protest must serve a copy of that document on the Applicant. In reference to filings initiating a new proceeding, interventions or protests submitted on or before the comment deadline need not be served on persons other than the Applicant.

The Commission encourages electronic submission of protests and interventions in lieu of paper, using the FERC Online links at *http://www.ferc.gov*. To facilitate electronic service, persons with Internet access who will eFile a document and/or be listed as a contact for an intervenor must create and validate an eRegistration account using the eRegistration link. Select the eFiling link to log on and submit the intervention or protests.

Persons unable to file electronically should submit an original and 14 copies of the intervention or protest to the Federal Energy Regulatory Commission, 888 First St., NE., Washington, DC 20426.

The filings in the above proceedings are accessible in the Commission's eLibrary system by clicking on the appropriate link in the above list. They are also available for review in the Commission's Public Reference Room in Washington, DC. There is an eSubscription link on the Web site that enables subscribers to receive e-mail notification when a document is added to a subscribed docket(s). For assistance with any FERC Online service, please e-mail *FERCOnlineSupport@ferc.gov*. or call (866) 208–3676 (toll free). For TTY, call (202) 502–8659.

Nathaniel J. Davis, Sr.,

Deputy Secretary.

[FR Doc. E9–8260 Filed 4–10–09; 8:45 am]

BILLING CODE 6717–01–P

ENVIRONMENTAL PROTECTION AGENCY

[EPA–HQ–OPPT–2009–0200; FRL–8411–6]

Certain New Chemicals; Receipt and Status Information

AGENCY: Environmental Protection Agency (EPA).

ACTION: Notice.

SUMMARY: Section 5 of the Toxic Substances Control Act (TSCA) requires any person who intends to manufacture (defined by statute to include import) a new chemical (i.e., a chemical not on the TSCA Inventory) to notify EPA and comply with the statutory provisions pertaining to the manufacture of new chemicals. Under sections 5(d)(2) and 5(d)(3) of TSCA, EPA is required to publish a notice of receipt of a premanufacture notice (PMN) or an application for a test marketing exemption (TME), and to publish periodic status reports on the chemicals under review and the receipt of notices of commencement to manufacture those chemicals. This status report, which covers the period from February 17, 2009 through February 27, 2009, consists of the PMNs and TME, both pending or expired, and the notices of commencement to manufacture a new chemical that the Agency has received under TSCA section 5 during this time period.

DATES: Comments identified by the specific PMN number or TME number, must be received on or before May 13, 2009.

ADDRESSES: Submit your comments, identified by docket identification (ID) number EPA–HQ–OPPT–2009–0200, by one of the following methods:

• *Federal eRulemaking Portal*: *http://www.regulations.gov*. Follow the on-line instructions for submitting comments.

• *Mail*: Document Control Office (7407M), Office of Pollution Prevention and Toxics (OPPT), Environmental Protection Agency, 1200 Pennsylvania Ave., NW., Washington, DC 20460–0001.

• *Hand Delivery*: OPPT Document Control Office (DCO), EPA East Bldg., Rm. 6428, 1201 Constitution Ave., NW., Washington, DC. Attention: Docket ID Number EPA–HQ–OPPT–2009–0200. The DCO is open from 8 a.m. to 4 p.m., Monday through Friday, excluding legal holidays. The telephone number for the DCO is (202) 564–8930. Such deliveries are only accepted during the DCO's normal hours of operation, and special arrangements should be made for deliveries of boxed information.

Instructions: Direct your comments to docket ID number EPA–HQ–OPPT–2009–0200. EPA's policy is that all comments received will be included in the docket without change and may be made available on-line at *http://www.regulations.gov*, including any personal information provided, unless the comment includes information claimed to be Confidential Business Information (CBI) or other information whose disclosure is restricted by statute. Do not submit information that you consider to be CBI or otherwise protected through regulations.gov or e-mail. The regulations.gov website is an ''anonymous access'' system, which means EPA will not know your identity or contact information unless you provide it in the body of your comment. If you send an e-mail comment directly to EPA without going through regulations.gov, your e-mail address will be automatically captured and included as part of the comment that is placed in the docket and made available on the Internet. If you submit an electronic comment, EPA recommends that you include your name and other contact information in the body of your comment and with any disk or CD-ROM you submit. If EPA cannot read your comment due to technical difficulties and cannot contact you for clarification, EPA may not be able to consider your comment. Electronic files should avoid the use of special characters, any form of encryption, and be free of any defects or viruses. For additional information about EPA's public docket, visit the EPA Docket Center homepage at *http://www.epa.gov/epahome/dockets.htm*.

Docket: All documents in the docket are listed in the docket index available in regulations.gov. To access the

electronic docket, go to *http://www.regulations.gov*, select ''Advanced Search,'' then ''Docket Search.'' Insert the docket ID number where indicated and select the ''Submit'' button. Follow the instructions on the regulations.gov website to view the docket index or access available documents. Although listed in the index, some information is not publicly available, e.g., CBI or other information whose disclosure is restricted by statute. Certain other material, such as copyrighted material, will be publicly available only in hard copy. Publicly available docket materials are available electronically at *http://www.regulations.gov*, or, if only available in hard copy, at the OPPT Docket. The OPPT Docket is located in the EPA Docket Center (EPA/DC) at Rm. 3334, EPA West Bldg., 1301 Constitution Ave., NW., Washington, DC. The EPA/DC Public Reading Room hours of operation are 8:30 a.m. to 4:30 p.m., Monday through Friday, excluding Federal holidays. The telephone number of the EPA/DC Public Reading Room is (202) 566–1744, and the telephone number for the OPPT Docket is (202) 566–0280. Docket visitors are required to show photographic identification, pass through a metal detector, and sign the EPA visitor log. All visitor bags are processed through an X-ray machine and subject to search. Visitors will be provided an EPA/DC badge that must be visible at all times in the building and returned upon departure.

FOR FURTHER INFORMATION CONTACT:

Colby Lintner, Regulatory Coordinator, Environmental Assistance Division, Office of Pollution Prevention and Toxics (7408M), Environmental Protection Agency, 1200 Pennsylvania Ave., NW., Washington, DC 20460–0001; telephone number: (202) 554–1404; e-mail address: *TSCA-Hotline@epa.gov*.

SUPPLEMENTARY INFORMATION:

I. General Information

A. Does this Action Apply to Me?

This action is directed to the public in general. As such, the Agency has not attempted to describe the specific entities that this action may apply to. Although others may be affected, this action applies directly to the submitter of the premanufacture notices addressed in the action. If you have any questions regarding the applicability of this action to a particular entity, consult the person listed under **FOR FURTHER INFORMATION CONTACT**.

B. What Should I Consider as I Prepare My Comments for EPA?

1. *Submitting CBI.* Do not submit this information to EPA through regulations.gov or e-mail. Clearly mark the part or all of the information that you claim to be CBI. For CBI information in a disk or CD-ROM that you mail to EPA, mark the outside of the disk or CD-ROM that you mail to EPA, mark the outside of the disk or CD-ROM as CBI and then identify electronically within the disk or CD-ROM the specific information that is claimed as CBI. In addition to one complete version of the comment that includes information claimed as CBI, a copy of the comment that does not contain the information claimed as CBI must be submitted for inclusion in the public docket. Information so marked will not be disclosed except in accordance with procedures set forth in 40 CFR part 2.

2. *Tips for preparing your comments.* When submitting comments, remember to:

i. Identify the document by docket ID number and other identifying information (subject heading, **Federal Register** date and page number).

ii. Follow directions. The Agency may ask you to respond to specific questions or organize comments by referencing a Code of Federal Regulations (CFR) part or section number.

iii. Explain why you agree or disagree; suggest alternatives and substitute language for your requested changes.

iv. Describe any assumptions and provide any technical information and/or data that you used.

v. If you estimate potential costs or burdens, explain how you arrived at your estimate in sufficient detail to allow for it to be reproduced.

vi. Provide specific examples to illustrate your concerns and suggest alternatives.

vii. Explain your views as clearly as possible, avoiding the use of profanity or personal threats.

viii. Make sure to submit your comments by the comment period deadline identified.

II. Why is EPA Taking this Action?

Section 5 of TSCA requires any person who intends to manufacture (defined by statute to include import) a new chemical (i.e., a chemical not on the TSCA Inventory to notify EPA and comply with the statutory provisions pertaining to the manufacture of new chemicals. Under sections 5(d)(2) and 5(d)(3) of TSCA, EPA is required to publish a notice of receipt of a PMN or an application for a TME and to publish periodic status reports on the chemicals under review and the receipt of notices of commencement to manufacture those chemicals. This status report, which covers the period from February 17, 2009 through February 27, 2009 2008, consists of the PMNs and TME, both pending or expired, and the notices of commencement to manufacture a new chemical that the Agency has received under TSCA section 5 during this time period.

III. Receipt and Status Report for PMNs

This status report identifies the PMNs and TME, both pending or expired, and the notices of commencement to manufacture a new chemical that the Agency has received under TSCA section 5 during this time period. If you are interested in information that is not included in the following tables, you may contact EPA as described in Unit I. to access additional non-CBI information that may be available.

In Table I of this unit, EPA provides the following information (to the extent that such information is not claimed as CBI) on the PMNs received by EPA during this period: the EPA case number assigned to the PMN; the date the PMN was received by EPA; the projected end date for EPA's review of the PMN; the submitting manufacturer; the potential uses identified by the manufacturer in the PMN; and the chemical identity.

I. 27 PREMANUFACTURE NOTICES RECEIVED FROM: 2/17/09 TO 2/27/09

Case No.	Received Date	Projected Notice End Date	Manufacturer/Importer	Use	Chemical
P–09–0222	02/17/09	05/17/09	CBI	(G) Moisture cure polyurethane adhesive	(G) Isocyanate terminated urethane polymer
P–09–0223	02/17/09	05/17/09	CBI	(G) Moisture cure polyurethane adhesive	(G) Isocyanate terminated urethane polymer
P–09–0224	02/17/09	05/17/09	CBI	(G) Moisture cure polyurethane adhesive	(G) Isocyanate terminated urethane polymer

I. 27 PREMANUFACTURE NOTICES RECEIVED FROM: 2/17/09 TO 2/27/09—Continued

Case No.	Received Date	Projected Notice End Date	Manufacturer/Importer	Use	Chemical
P–09–0225	02/17/09	05/17/09	CBI	(G) Moisture cure polyurethane adhesive	(G) Isocyanate terminated urethane polymer
P–09–0226	02/17/09	05/17/09	CBI	(G) Moisture cure polyurethane adhesive	(G) Isocyanate terminated urethane polymer
P–09–0227	02/17/09	05/17/09	CBI	(G) Moisture cure polyurethane adhesive	(G) Isocyanate terminated urethane polymer
P–09–0228	02/17/09	05/17/09	Cytec Industries Inc.	(G) Industrial coating agent	(G) Fatty acids, polymers with substituted alkanoate, polyethylene glycol mono-me ether, polyol and substituted carbomonocycle
P–09–0229	02/17/09	05/17/09	CBI	(G) An open non-dispersive use in adhesive formulations	(G) Rosin phenolies
P–09–0230	02/17/09	05/17/09	CBI	(G) An open non-dispersive use in adhesive formulations	(G) Rosin phenolies
P–09–0231	02/17/09	05/17/09	CBI	(G) An open non-dispersive use in adhesive formulations	(G) Rosin phenolies
P–09–0232	02/17/09	05/17/09	CBI	(G) An open non-dispersive use in adhesive formulations	(G) Rosin phenolies
P–09–0233	02/17/09	05/17/09	CBI	(G) An open non-dispersive use in adhesive formulations	(G) Rosin phenolies
P–09–0234	02/18/09	05/18/09	CBI	(G) Drilling fluid additive	(G) Polymeric ether
P–09–0235	02/18/09	05/18/09	CBI	(G) Open non-disperive use	(G) Aspartic ester resin
P–09–0236	02/18/09	05/18/09	Akzo Nobel Polymer Chemicals LLC	(G) Polymer additive for open, non-dispersive use	(S) Alkenes, C_{20-24} .alpha.-, polymers with maleic anhydride, C_{16-18} alkyl esters
P–09–0237	02/20/09	05/20/09	Innospec Fuel Specialties LLC	(G) Destructive use	(S) Formaldehyde, polymers with alkylphenol, branched and alkylamine
P–09–0238	02/20/09	05/20/09	Nitron International Corporation	(S) Agricultural fertilizer	(S) Ammonium sulphate nitrate
P–09–0239	02/20/09	05/20/09	Wacker Chemical Corporation	(S) Coating of paper and other substrates	(G) Siloxanes and silicones, di-me polymers with (chloromethylsilyl)-functional alkane, vinyl-group terminated
P–09–0240	02/20/09	05/20/09	Lubrizol	(S) Corrosion inhibitor in metal-working fluids	(S) Morpholine, 4,4′-methylenebis-
P–09–0241	02/23/09	05/23/09	Nagase America Corporation	(G) Industrial reactant	(S) 1,2-ethanediol, reaction products with epichlorohydrin
P–09–0242	02/23/09	05/23/09	Cytec Industries Inc.	(G) Industrial coatings agent	(G) Substituted acrylates, polymer with substituted polyglycol ether prepolymer, substituted alkylnitrile-initiated
P–09–0243	02/24/09	05/24/09	CBI	(G) Monomer	(G) Substituted propyl methacrylamide
P–09–0244	02/24/09	05/24/09	Meadwestvaco Corporation - Specialty Chemicals Division	(S) Asphalt emulsifier; intermediate	(G) Amidoamines from the reaction products of modified fatty acids and substituted ethyleneamines.
P–09–0245	02/24/09	05/24/09	CBI	(G) Coating for open, non-dispersive use; surface active agent; oil and water repellent agent	(G) Partially fluorinated alcohol, reaction products with phosphorus oxide (P2O5), ammonium salts
P–09–0246	02/24/09	05/24/09	CBI	(G) Coating for open, non-dispersive use; surface active agent; oil and water repellent agent	(G) Partially fluorinated alcohol, reaction products with phosphorus oxide (P2O5)
P–09–0247	02/25/09	05/25/09	CBI	(G) Oil-field additive	(G) Acrylamide-based copolymer
P–09–0248	02/25/09	05/25/09	P N Solutions Inc.	(S) Flame retardant added to polymers aqueous solution to stop wildfires	(G) Ethyleneamine polyphosphates

In Table II of this unit, EPA provides the following information (to the extent that such information is not claimed as CBI) on the TMEs received:

II. 2 TEST MARKETING EXEMPTION NOTICES RECEIVED FROM: 2/17/09 TO 2/27/09

Case No.	Received Date	Projected Notice End Date	Manufacturer/Importer	Use	Chemical
T–09–0004	02/17/09	04/02/09	Cytec Industries Inc.	(G) Industrial coating agent	(G) Fatty acids, polymers with substituted alkanoate, polyethylene glycol mono-me ether, polyol and substituted carbomonocycle
T–09–0005	02/23/09	04/08/09	Cytec Industries Inc.	(G) Industrial coatings agent	(G) Substituted acrylates, polymer with substituted polyglycol ether prepolymer, substituted alkylnitrile-initiated

In Table III of this unit, EPA provides the following information (to the extent that such information is not claimed as CBI) on the Notices of Commencement to manufacture received:

III. 21 NOTICES OF COMMENCEMENT FROM: 2/17/09 TO 2/27/09

Case No.	Received Date	Commencement Notice End Date	Chemical
P–07–0414	02/18/09	01/06/09	(G) Alkyl heteroalkyl chloride
P–08–0067	02/17/09	01/23/09	(G) 1,1‴-[1,4-phenylenebis(methylene)]bis[1′,3′-dihydro-8-methoxy-3′3,′-dimethyl-6-nitro- aromatic substituted indole
P–08–0178	02/20/09	02/02/09	(G) Substituted benzoyl chloride
P–08–0262	02/18/09	02/03/09	(G) Polyester polyurethane
P–08–0305	02/19/09	02/05/09	(G) Compound of oxalkylated amine with fatty acid adduct
P–08–0353	02/23/09	02/13/09	(S) Propanoic acid, 2,2-dimethyl-, 3-methyl-3-buten-1-yl ester
P–08–0548	02/19/09	02/05/09	(G) Polyether modified polyurethane
P–08–0557	02/24/09	02/15/09	(G) Acrylated aliphatic polyurethane
P–08–0559	02/18/09	01/16/09	(G) Aliphatic ketoxime
P–08–0624	02/24/09	02/15/09	(G) Acrylated aliphatic polyurethane
P–08–0688	02/18/09	01/15/09	(G) Epoxy-amine adduct
P–08–0693	02/18/09	02/06/09	(G) Substituted carbomonocycles, polymer with substituted glycols and alkyldioic acid
P–08–0699	02/17/09	02/04/09	(G) Alkoxysilane
P–08–0703	02/17/09	02/06/09	(G) Dihydroxyalkanoic acid, polymer with polyetherdiol and alicyclic diisocyanate
P–08–0739	02/17/09	01/16/09	(G) Fatty acids, vegetable, polymers with aliphatic and cycloaliphatic dicarboxylic acids, polyols, dihydroxycarboxylic acids, cycloaliphatic diisocyanates, and tertiary alkyl amines.
P–08–0745	02/24/09	01/30/09	(G) Silicone copolyol phthalate
P–08–0746	02/24/09	01/31/09	(G) Silicone copolyol phthalate (zinc salts)
P–09–0012	02/23/09	02/10/09	(S) Magnesium, chloroethenyl-
P–09–0019	02/24/09	01/29/09	(G) Cycloaliphatic diglycidyl ester
P–09–0045	02/23/09	02/09/09	(S) Propanol, 1(or 2)-(methyl-2-phenoxyethoxy)-
P–09–0046	02/19/09	02/05/09	(S) Cyclosiloxanes, 3-[2-hydroxy-3-[(2-methyl-1-oxo-2-propen-1-yl)oxy]propoxy]propyl me, 3-[3-hydroxy-2-[(2-methyl-1-oxo-2-propen-1-yl)oxy]propoxy]propyl me, me 3-(2-oxiranylmethoxy)propyl

List of Subjects

Environmental protection, Chemicals, Premanufacturer notices.

Dated: March 23, 2009.

Chandler Sirmons,

Acting Director, Information Management Division, Office of Pollution Prevention and Toxics.

[FR Doc. E9–8360 Filed 4–10–09; 8:45 am]

BILLING CODE 6560–50–S

ENVIRONMENTAL PROTECTION AGENCY

[EPA–HQ–OPPT–2009–0147; FRL–8406–5]

Certain New Chemicals; Receipt and Status Information

AGENCY: Environmental Protection Agency (EPA).

ACTION: Notice.

SUMMARY: Section 5 of the Toxic Substances Control Act (TSCA) requires any person who intends to manufacture (defined by statute to include import) a new chemical (i.e., a chemical not on the TSCA Inventory) to notify EPA and comply with the statutory provisions pertaining to the manufacture of new chemicals. Under sections 5(d)(2) and 5(d)(3) of TSCA, EPA is required to publish a notice of receipt of a premanufacture notice (PMN) or an application for a test marketing exemption (TME), and to publish periodic status reports on the chemicals under review and the receipt of notices of commencement to manufacture those chemicals. This status report, which covers the period from January 26, 2009 through February 13, 2009, consists of the PMNs and TME, both pending or expired, and the notices of commencement to manufacture a new

chemical that the Agency has received under TSCA section 5 during this time period.

DATES: Comments identified by the specific PMN number or TME number, must be received on or before May 13, 2009.

ADDRESSES: Submit your comments, identified by docket identification (ID) number EPA–HQ–OPPT–2009–0147, by one of the following methods:

• *Federal eRulemaking Portal*: *http://www.regulations.gov*. Follow the on-line instructions for submitting comments.

• *Mail*: Document Control Office (7407M), Office of Pollution Prevention and Toxics (OPPT), Environmental Protection Agency, 1200 Pennsylvania Ave., NW., Washington, DC 20460–0001.

• *Hand Delivery*: OPPT Document Control Office (DCO), EPA East Bldg., Rm. 6428, 1201 Constitution Ave., NW., Washington, DC. Attention: Docket ID Number EPA–HQ–OPPT–2009–0147. The DCO is open from 8 a.m. to 4 p.m., Monday through Friday, excluding legal holidays. The telephone number for the DCO is (202) 564–8930. Such deliveries are only accepted during the DCO's normal hours of operation, and special arrangements should be made for deliveries of boxed information.

Instructions: Direct your comments to docket ID number EPA–HQ–OPPT–2009–0147. EPA's policy is that all comments received will be included in the docket without change and may be made available on-line at *http://www.regulations.gov*, including any personal information provided, unless the comment includes information claimed to be Confidential Business Information (CBI) or other information whose disclosure is restricted by statute. Do not submit information that you consider to be CBI or otherwise protected through regulations.gov or e-mail. The regulations.gov website is an ''anonymous access'' system, which means EPA will not know your identity or contact information unless you provide it in the body of your comment. If you send an e-mail comment directly to EPA without going through regulations.gov, your e-mail address will be automatically captured and included as part of the comment that is placed in the docket and made available on the Internet. If you submit an electronic comment, EPA recommends that you include your name and other contact information in the body of your comment and with any disk or CD-ROM you submit. If EPA cannot read your comment due to technical difficulties and cannot contact you for clarification, EPA may not be able to consider your comment. Electronic files should avoid the use of special characters, any form of encryption, and be free of any defects or viruses. For additional information about EPA's public docket, visit the EPA Docket Center homepage at *http://www.epa.gov/epahome/dockets.htm*.

Docket: All documents in the docket are listed in the docket index available in regulations.gov. To access the electronic docket, go to *http://www.regulations.gov*, select ''Advanced Search,'' then ''Docket Search.'' Insert the docket ID number where indicated and select the ''Submit'' button. Follow the instructions on the regulations.gov website to view the docket index or access available documents. Although listed in the index, some information is not publicly available, e.g., CBI or other information whose disclosure is restricted by statute. Certain other material, such as copyrighted material, will be publicly available only in hard copy. Publicly available docket materials are available electronically at *http://www.regulations.gov*, or, if only available in hard copy, at the OPPT Docket. The OPPT Docket is located in the EPA Docket Center (EPA/DC) at Rm. 3334, EPA West Bldg., 1301 Constitution Ave., NW., Washington, DC. The EPA/DC Public Reading Room hours of operation are 8:30 a.m. to 4:30 p.m., Monday through Friday, excluding Federal holidays. The telephone number of the EPA/DC Public Reading Room is (202) 566–1744, and the telephone number for the OPPT Docket is (202) 566–0280. Docket visitors are required to show photographic identification, pass through a metal detector, and sign the EPA visitor log. All visitor bags are processed through an X-ray machine and subject to search. Visitors will be provided an EPA/DC badge that must be visible at all times in the building and returned upon departure.

FOR FURTHER INFORMATION CONTACT: Colby Lintner, Regulatory Coordinator, Environmental Assistance Division, Office of Pollution Prevention and Toxics (7408M), Environmental Protection Agency, 1200 Pennsylvania Ave., NW., Washington, DC 20460–0001; telephone number: (202) 554–1404; e-mail address: *TSCA-Hotline@epa.gov*.

SUPPLEMENTARY INFORMATION:

I. General Information

A. Does this Action Apply to Me?

This action is directed to the public in general. As such, the Agency has not attempted to describe the specific entities that this action may apply to. Although others may be affected, this action applies directly to the submitter of the premanufacture notices addressed in the action. If you have any questions regarding the applicability of this action to a particular entity, consult the person listed under **FOR FURTHER INFORMATION CONTACT**.

B. What Should I Consider as I Prepare My Comments for EPA?

1. *Submitting CBI*. Do not submit this information to EPA through regulations.gov or e-mail. Clearly mark the part or all of the information that you claim to be CBI. For CBI information in a disk or CD-ROM that you mail to EPA, mark the outside of the disk or CD-ROM that you mail to EPA, mark the outside of the disk or CD-ROM as CBI and then identify electronically within the disk or CD-ROM the specific information that is claimed as CBI. In addition to one complete version of the comment that includes information claimed as CBI, a copy of the comment that does not contain the information claimed as CBI must be submitted for inclusion in the public docket. Information so marked will not be disclosed except in accordance with procedures set forth in 40 CFR part 2.

2. *Tips for preparing your comments*. When submitting comments, remember to:

i. Identify the document by docket ID number and other identifying information (subject heading, **Federal Register** date and page number).

ii. Follow directions. The Agency may ask you to respond to specific questions or organize comments by referencing a Code of Federal Regulations (CFR) part or section number.

iii. Explain why you agree or disagree; suggest alternatives and substitute language for your requested changes.

iv. Describe any assumptions and provide any technical information and/or data that you used.

v. If you estimate potential costs or burdens, explain how you arrived at your estimate in sufficient detail to allow for it to be reproduced.

vi. Provide specific examples to illustrate your concerns and suggest alternatives.

vii. Explain your views as clearly as possible, avoiding the use of profanity or personal threats.

viii. Make sure to submit your comments by the comment period deadline identified.

II. Why is EPA Taking this Action?

Section 5 of TSCA requires any person who intends to manufacture (defined by statute to include import) a new chemical (i.e., a chemical not on the TSCA Inventory to notify EPA and comply with the statutory provisions

pertaining to the manufacture of new chemicals. Under sections 5(d)(2) and 5(d)(3) of TSCA, EPA is required to publish a notice of receipt of a PMN or an application for a TME and to publish periodic status reports on the chemicals under review and the receipt of notices of commencement to manufacture those chemicals. This status report, which covers the period from January 26, 2009 through February 13, 2009, consists of the PMNs and TME, both pending or expired, and the notices of commencement to manufacture a new chemical that the Agency has received under TSCA section 5 during this time period.

III. Receipt and Status Report for PMNs

This status report identifies the PMNs and TME, both pending or expired, and the notices of commencement to manufacture a new chemical that the Agency has received under TSCA section 5 during this time period. If you are interested in information that is not included in the following tables, you may contact EPA as described in Unit I. to access additional non-CBI information that may be available.

In Table I of this unit, EPA provides the following information (to the extent that such information is not claimed as CBI) on the PMNs received by EPA during this period: the EPA case number assigned to the PMN; the date the PMN was received by EPA; the projected end date for EPA's review of the PMN; the submitting manufacturer; the potential uses identified by the manufacturer in the PMN; and the chemical identity.

I. 44 PREMANUFACTURE NOTICES RECEIVED FROM: 01/26/09 TO 02/13/09

Case No.	Received Date	Projected Notice End Date	Manufacturer/Importer	Use	Chemical
P–09–0178	01/26/09	04/25/09	CBI	(G) Polymer coating	(G) Fatty acids, dimers, polymers with alkane diol, dihydroxyfunctional monocarboxylic acid, alkyl isocyanate, alkanediol, aromatic anhydride, glycol ether and alkanetriol, compounds with amino alcohol
P–09–0179	01/26/09	04/25/09	CBI	(G) Polymer coating	(G) Fatty acids, dimers, polymers dihydroxyfunctional monocarboxylic acid, alkane diol, alkyl isocyanate, alkanediol, aromatic anhydride, glycol ether and alkanetriol, compounds with amino alcohol
P–09–0180	01/26/09	04/25/09	DuPont Performance Elastomers, LLC	(G) Polymer modifier / process aid fluoroelastomer part	(G) Modified tetrafluoroethylene-hexafluoropropene-vinylidene fluoride copolymer
P–09–0181	01/26/09	04/25/09	CBI	(G) Intermediate polymer	(G) Dimer fatty acids, polymers with alkane diol, alkyl glycol, carboxylic acid anhydride, glycol ether and alcohol
P–09–0182	01/27/09	04/26/09	CBI	(G) Polymer for waterborne paint	(G) 2-propenoic acid, 2-methyl-, polymer with ethenylbenzene, ethyl 2-propenoate, formaldehyde, 2-hydroxyethyl 2-propenoate, methyl 2-methyl-2-propenoate and substituted monoheterocycle, tert-bu 2-ethylhexaneperoxoate-initiated, compounds with 2-(dimethylamino)ethanol]
P–09–0183	01/27/09	04/26/09	Cook Composites and Polymers Co.	(S) Thermoset laminating resin for reinforced composite parts; thermoset closed molding resin for reinforced composite parts	(G) 2,5-furandione, polymer with alkanediol, 3a,4,5,6,7,7a-hexahydro-4,7-methano-1*H*-inden-5(or 6)-yl ester
P–09–0184	01/26/09	04/25/09	CBI	(S) Resin for ultra violet or eletron beam radiation curable coatings and inks	(G) Polyester polyurethane acrylate oligomer
P–09–0185	01/27/09	04/26/09	Cytec Industries Inc.	(G) Coatings resin	(G) Substituted carbomonocycles polymer with substituted hetermonocycle, alkane diol, substituted alkanoic acid, alkylene glycol compound with substituted amine
P–09–0186	01/27/09	04/26/09	Cytec Industries Inc.	(G) coating resin	(S) Phenol, polymer with formaldehyde, bu ether
P–09–0187	01/29/09	04/28/09	Lubrizol	(S) Corrosion inhibitor in metal-working fluids	(S) *N,N'*-methylenebismorpholine
P–09–0188	01/29/09	04/28/09	CBI	(G) Component of paints, coatings, and industrial composites	(G) Carbon nanomaterial
P–09–0189	01/29/09	04/28/09	Reichhold, Inc.	(S) Pigment gringing vehicle	(G) Polyester polymer
P–09–0190	01/30/09	04/29/09	CBI	(G) Curative for epoxy containing adhesives	(S) Fatty acids, C_{18}-unsaturated, dimers, di-me esters, hydrogenated, bis[4-(acetyloxy)benzoates]

I. 44 PREMANUFACTURE NOTICES RECEIVED FROM: 01/26/09 TO 02/13/09—Continued

Case No.	Received Date	Projected Notice End Date	Manufacturer/Importer	Use	Chemical
P–09–0191	01/30/09	04/29/09	CBI	(G) Emulsifier	(G) Polyoxyalkylene phenyl ether, styrenated, sulfated, ammonium salts
P–09–0192	01/30/09	04/29/09	Esstech, Inc.	(S) Adhesive	(S) 1,2,4,5-benzenetetracarboxylic acid, 1,4-bis[2-[(2-methyl-1-oxo-propen-1-yl)oxy]-1-[[(2-methyl-1-oxo-2-propen-1-yl)oxy]methyl]ethyl] ester
P–09–0193	02/03/09	05/03/09	CBI	(S) Intermediate for flame retardant polyurethane manufacture	(S) Phosphonic acid, [2-[bis(2-hydroxyethyl)amino]ethyl]-, bis(2-chloroethyl) ester
P–09–0194	02/03/09	05/03/09	CBI	(S) Binder for flame retardant textile coatings	(G) Polyurethane toluenediisocyante, aklyl glycol adipate polyester, brominated neopentylglycol and chloroethyl phosphonic acid diols.
P–09–0195	02/03/09	05/03/09	CBI	(S) Intermediate for flame retardant polyurethane manufacture	(S) Phosphonic acid, *P*-[2-[bis(2-hydroxyethyl)amino]ethyl]-, 2-bis(2-chloroethoxy)phosphinyl]ethyl 2-chloroethyl ester
P–09–0196	02/03/09	05/03/09	CBI	(G) Adhesive	(G) Acrylic isocyanate intermediate
P–09–0198	02/04/09	05/04/09	CBI	(G) Additive for reinforcement	(G) Carbon derivative
P–09–0199	02/04/09	05/04/09	CBI	(G) Additive for reinforcement	(G) Carbon derivative
P–09–0200	02/05/09	05/05/09	DuPont Company	(G) Polymer additive	(G) Alkanoic acid, potassium salt
P–09–0201	02/05/09	05/05/09	DuPont Company	(G) Polymer additive	(G) Alkanoic acid, sodium salt
P–09–0202	02/05/09	05/05/09	CBI	(G) Lubricant additive	(G) *N*-aklyl pyrrolidinedione derivative
P–09–0203	02/06/09	05/06/09	CBI	(G) Fabrication of composite articles.	(G) Unsaturated urethane methacrylate
P–09–0204	02/06/09	05/06/09	Wacker Chemical Corporation	(S) Additive for antifoam agents	(G) Siloxanes and silicones, di-me, hydroxyalkyl me, alkoxylated, polymers with diisocyanatoalkane, polyalkylene-glycol monoallyl ether-blocked
P–09–0205	02/06/09	05/06/09	CBI	(G) Inhibitor for oil field applications	(G) Quaternary ammonium compound
P–09–0206	02/06/09	05/06/09	CBI	(G) Raw material for reaction to form a polymer.	(G) Alkymethacrylate
P–09–0207	02/09/09	05/09/09	CBI	(S) Site limited, isolated, chemical intermediate	(G) Alcohol ethoxylate
P–09–0208	02/10/09	05/10/09	CBI	(S) Curing agent for epoxy coating systems	(G) Mixture on *N*-methylated polyalkylenepolyamine
P–09–0209	02/10/09	05/10/09	Cognis Corporation	(G) Low foaming wetting agent	(S) Poly(oxy-1,2-ethanediyl), .alpha.-undecyl-.omega.-hydroxy-, branched and linear, ethers with 1,2-decanediol (1:1)
P–09–0210	02/11/09	05/11/09	CBI	(G) Pour point depressant	(G) Furandione polymer with ethenylbenzene, alkyl ester
P–09–0211	02/11/09	05/11/09	CBI	(G) Inhibitor for oilfield applications	(G) Quaternary ammonium compound
P–09–0212	02/12/09	05/12/09	CBI	(S) Intermediate for industry foam; intermediate for insulating foam	(G) Polyol, polyester polyol
P–09–0213	02/11/09	05/11/09	CBI	(G) Polymeric binder	(G) Styrene-methacrylate copolymer
P–09–0214	02/11/09	05/11/09	CBI	(G) Polymeric binder	(G) Styrene-methacrylate copolymer
P–09–0215	02/11/09	05/11/09	CBI	(G) Polymeric binder	(G) Styrene-methacrylate copolymer
P–09–0216	02/12/09	05/12/09	Solvay Fluorides LLC	(G) Specialty additive	(S) 1,3-dioxolan-2-one, 4-fluoro-
P–09–0217	02/12/09	05/12/09	CBI	(G) Functional component in industrial fluid	(G) Fatty acid ester
P–09–0218	02/12/09	05/12/09	CBI	(G) Functional component in industrial fluid	(G) Fatty acid ester
P–09–0219	02/12/09	05/12/09	CBI	(G) Functional component in industrial fluid	(G) Fatty acid ester
P–09–0220	02/12/09	05/12/09	CBI	(G) Functional component in industrial fluid	(G) Fatty acid ester
P–09–0221	02/12/09	05/12/09	CBI	(G) Functional component in industrial fluid	(G) Fatty acid ester

In Table II of this unit, EPA provides the following information (to the extent that such information is not claimed as CBI) on the TMEs received:

II. 2 TEST MARKETING EXEMPTION NOTICES RECEIVED FROM: 01/26/09 TO 02/13/09

Case No.	Received Date	Projected Notice End Date	Manufacturer/Importer	Use	Chemical
T–09–0002	01/27/09	03/12/09	Cytec Industries Inc.	(G) Coatings resin	(G) Substituted carbomonocycles polymer with substituted hetermonocycle, alkane diol, substituted alkanoic acid, alkylene glycol compound with substituted amine
T–09–0003	01/27/09	03/12/09	Cytec Industries Inc.	(G) Coatings resin	(S) Phenol, polymer with formaldehyde, bu ether

In Table III of this unit, EPA provides the following information (to the extent that such information is not claimed as CBI) on the Notices of Commencement to manufacture received:

III. 14 NOTICES OF COMMENCEMENT FROM: 01/26/09 TO 02/13/09

Case No.	Received Date	Commencement Notice End Date	Chemical
P–00–0849	02/04/09	11/21/08	(S) Morpholine, 4-(1,1-dimethylethyl)-
P–06–0324	02/03/09	01/07/09	(G) Polyphosphoric acids compounds with pyrolyzed melamine
P–06–0379	01/27/09	01/06/09	(G) Alkyl substituted carbotricycle acid anhydride
P–06–0725	02/09/09	01/25/09	(G) Propyl heptanol distillation residues
P–07–0445	02/03/09	01/14/09	(G) Fluoroalkyl methacrylate copolymer
P–08–0472	01/29/09	12/29/08	(S) Morpholine, 4-[(triethoxysilyl)methyl]-*
P–08–0554	02/12/09	02/04/09	(G) Aqueous polyurethane dispersion
P–08–0681	02/03/09	01/30/09	(G) Polyester resin
P–08–0689	01/26/09	12/17/08	(G) Substituted aliphatic amine
P–08–0701	02/04/09	01/20/09	(G) Benzoic acid, 4-chloro-2-[(substituted)azo]-, strontium salt (1:1)
P–08–0736	01/28/09	01/06/09	(G) Alkanedioic acid, polymer with alkyl diisocyanate, substituted alkyldiol, substituted alkanoic acid, copolymer, substituted oxepanone homopolymer-blocked
P–08–0741	01/30/09	01/07/09	(G) Cyclohexanedialdehyde tetra phenol
P–08–0750	02/04/09	01/21/09	(G) Aqueous polyurethane resin dispersion
P–08–0756	02/03/09	01/30/09	(G) Polyester resin

List of Subjects

Environmental protection, Chemicals, Premanufacturer notices.

Dated: March 6, 2009.

Chandler Sirmons,

Acting Director, Information Management Division, Office of Pollution Prevention and Toxics.

[FR Doc. E9–8362 Filed 4–10–09; 8:45 am]

BILLING CODE 6560–50–S

ENVIRONMENTAL PROTECTION AGENCY

[EPA–HQ–OPPT–2009–0106; FRL–8406–4]

Certain New Chemicals; Receipt and Status Information

AGENCY: Environmental Protection Agency (EPA).

ACTION: Notice.

SUMMARY: Section 5 of the Toxic Substances Control Act (TSCA) requires any person who intends to manufacture (defined by statute to include import) a new chemical (i.e., a chemical not on the TSCA Inventory) to notify EPA and comply with the statutory provisions pertaining to the manufacture of new chemicals. Under sections 5(d)(2) and 5(d)(3) of TSCA, EPA is required to publish a notice of receipt of a premanufacture notice (PMN) or an application for a test marketing exemption (TME), and to publish periodic status reports on the chemicals under review and the receipt of notices of commencement to manufacture those chemicals. This status report, which covers the period from December 22, 2008 through January 23, 2009, consists of the PMNs and TME, both pending or expired, and the notices of commencement to manufacture a new chemical that the Agency has received under TSCA section 5 during this time period.

DATES: Comments identified by the specific PMN number or TME number, must be received on or before May 13, 2009.

ADDRESSES: Submit your comments, identified by docket identification (ID) number EPA–HQ–OPPT–2009–0106, by one of the following methods:

• *Federal eRulemaking Portal*: *http://www.regulations.gov*. Follow the on-line instructions for submitting comments.

• *Mail*: Document Control Office (7407M), Office of Pollution Prevention and Toxics (OPPT), Environmental Protection Agency, 1200 Pennsylvania Ave., NW., Washington, DC 20460–0001.

• *Hand Delivery*: OPPT Document Control Office (DCO), EPA East Bldg., Rm. 6428, 1201 Constitution Ave., NW., Washington, DC. Attention: Docket ID Number EPA–HQ–OPPT–2009–0106. The DCO is open from 8 a.m. to 4 p.m., Monday through Friday, excluding legal holidays. The telephone number for the DCO is (202) 564–8930. Such deliveries are only accepted during the DCO's normal hours of operation, and special arrangements should be made for deliveries of boxed information.

Instructions: Direct your comments to docket ID number EPA–HQ–OPPT–2009–0106. EPA's policy is that all comments received will be included in

the docket without change and may be made available on-line at *http://www.regulations.gov*, including any personal information provided, unless the comment includes information claimed to be Confidential Business Information (CBI) or other information whose disclosure is restricted by statute. Do not submit information that you consider to be CBI or otherwise protected through regulations.gov or e-mail. The regulations.gov website is an ''anonymous access'' system, which means EPA will not know your identity or contact information unless you provide it in the body of your comment. If you send an e-mail comment directly to EPA without going through regulations.gov, your e-mail address will be automatically captured and included as part of the comment that is placed in the docket and made available on the Internet. If you submit an electronic comment, EPA recommends that you include your name and other contact information in the body of your comment and with any disk or CD-ROM you submit. If EPA cannot read your comment due to technical difficulties and cannot contact you for clarification, EPA may not be able to consider your comment. Electronic files should avoid the use of special characters, any form of encryption, and be free of any defects or viruses. For additional information about EPA's public docket, visit the EPA Docket Center homepage at *http://www.epa.gov/epahome/dockets.htm*.

Docket: All documents in the docket are listed in the docket index available in regulations.gov. To access the electronic docket, go to *http://www.regulations.gov*, select ''Advanced Search,'' then ''Docket Search.'' Insert the docket ID number where indicated and select the ''Submit'' button. Follow the instructions on the regulations.gov website to view the docket index or access available documents. Although listed in the index, some information is not publicly available, e.g., CBI or other information whose disclosure is restricted by statute. Certain other material, such as copyrighted material, will be publicly available only in hard copy. Publicly available docket materials are available electronically at *http://www.regulations.gov*, or, if only available in hard copy, at the OPPT Docket. The OPPT Docket is located in the EPA Docket Center (EPA/DC) at Rm. 3334, EPA West Bldg., 1301 Constitution Ave., NW., Washington, DC. The EPA/DC Public Reading Room hours of operation are 8:30 a.m. to 4:30 p.m., Monday through Friday, excluding Federal holidays. The telephone number of the EPA/DC Public Reading Room is (202) 566–1744, and the telephone number for the OPPT Docket is (202) 566–0280. Docket visitors are required to show photographic identification, pass through a metal detector, and sign the EPA visitor log. All visitor bags are processed through an X-ray machine and subject to search. Visitors will be provided an EPA/DC badge that must be visible at all times in the building and returned upon departure.

FOR FURTHER INFORMATION CONTACT: Colby Lintner, Regulatory Coordinator, Environmental Assistance Division, Office of Pollution Prevention and Toxics (7408M), Environmental Protection Agency, 1200 Pennsylvania Ave., NW., Washington, DC 20460–0001; telephone number: (202) 554–1404; e-mail address: *TSCA-Hotline@epa.gov*.

SUPPLEMENTARY INFORMATION:

I. General Information

A. Does this Action Apply to Me?

This action is directed to the public in general. As such, the Agency has not attempted to describe the specific entities that this action may apply to. Although others may be affected, this action applies directly to the submitter of the premanufacture notices addressed in the action. If you have any questions regarding the applicability of this action to a particular entity, consult the person listed under **FOR FURTHER INFORMATION CONTACT**.

B. What Should I Consider as I Prepare My Comments for EPA?

1. *Submitting CBI*. Do not submit this information to EPA through regulations.gov or e-mail. Clearly mark the part or all of the information that you claim to be CBI. For CBI information in a disk or CD-ROM that you mail to EPA, mark the outside of the disk or CD-ROM that you mail to EPA, mark the outside of the disk or CD-ROM as CBI and then identify electronically within the disk or CD-ROM the specific information that is claimed as CBI. In addition to one complete version of the comment that includes information claimed as CBI, a copy of the comment that does not contain the information claimed as CBI must be submitted for inclusion in the public docket. Information so marked will not be disclosed except in accordance with procedures set forth in 40 CFR part 2.

2. *Tips for preparing your comments*. When submitting comments, remember to:

i. Identify the document by docket ID number and other identifying information (subject heading, **Federal Register** date and page number).

ii. Follow directions. The Agency may ask you to respond to specific questions or organize comments by referencing a Code of Federal Regulations (CFR) part or section number.

iii. Explain why you agree or disagree; suggest alternatives and substitute language for your requested changes.

iv. Describe any assumptions and provide any technical information and/or data that you used.

v. If you estimate potential costs or burdens, explain how you arrived at your estimate in sufficient detail to allow for it to be reproduced.

vi. Provide specific examples to illustrate your concerns and suggest alternatives.

vii. Explain your views as clearly as possible, avoiding the use of profanity or personal threats.

viii. Make sure to submit your comments by the comment period deadline identified.

II. Why is EPA Taking this Action?

Section 5 of TSCA requires any person who intends to manufacture (defined by statute to include import) a new chemical (i.e., a chemical not on the TSCA Inventory to notify EPA and comply with the statutory provisions pertaining to the manufacture of new chemicals. Under sections 5(d)(2) and 5(d)(3) of TSCA, EPA is required to publish a notice of receipt of a PMN or an application for a TME and to publish periodic status reports on the chemicals under review and the receipt of notices of commencement to manufacture those chemicals. This status report, which covers the period from December 22, 2008 through January 23, 2009, consists of the PMNs and TME, both pending or expired, and the notices of commencement to manufacture a new chemical that the Agency has received under TSCA section 5 during this time period.

III. Receipt and Status Report for PMNs

This status report identifies the PMNs and TME, both pending or expired, and the notices of commencement to manufacture a new chemical that the Agency has received under TSCA section 5 during this time period. If you are interested in information that is not included in the following tables, you may contact EPA as described in Unit I. to access additional non-CBI information that may be available.

In Table I of this unit, EPA provides the following information (to the extent that such information is not claimed as CBI) on the PMNs received by EPA during this period: the EPA case number assigned to the PMN; the date the PMN was received by EPA; the projected end

date for EPA's review of the PMN; the submitting manufacturer; the potential uses identified by the manufacturer in the PMN; and the chemical identity.

I. 48 PREMANUFACTURE NOTICES RECEIVED FROM: 12/22/08 TO 01/23/09

Case No.	Received Date	Projected Notice End Date	Manufacturer/Importer	Use	Chemical
P–09–0130	12/19/08	03/18/09	Huntsman Corporation	(G) Polyol for flexible and rigid polyurethane foam applications.	(S) Soybean oil, epoxidized, reaction products with diethanolamine
P–09–0131	12/19/08	03/18/09	CBI	(G) Raw material for the production of biphenyl dianhydride	(G) Aromatic carboxylic acid
P–09–0132	12/19/08	03/18/09	CBI	(G) Processing aid	(G) Alkyl substituted polyamide
P–09–0133	12/22/08	03/21/09	Evonik Degussa	(S) Extrusion of tubing systems; injection molding of special applications	(G) Aromatic dicarboxylic acid, polymer with alkane dicarboxylic acid and alkanediamine
P–09–0134	12/22/08	03/21/09	CBI	(G) Pour point depressant	(G) Furandione polymer with ethenylbenzene, alkyl ester
P–09–0135	12/22/08	03/21/09	ICL-IP America Inc.	(S) Flame retardant for polyurethane foam	(G) Pentabromobenzyl dialkylene glycol alkyl ether
P–09–0136	12/23/08	03/22/09	Henkel Corporation	(S) A catalyst in polyalkene syntheses	(S) Phosphorus(1+), dichlorobis(phosphorimidic trichloridato-.kappa.*N*)-, (*T*-4)-, hexachlorophosphate(1-) (1:1)
P–09–0137	12/23/08	03/22/09	CBI	(S) Packaging adhesive	(G) Aromatic polyether polyester polyurethane, isocyanate-terminated
P–09–0138	12/23/08	03/22/09	Cook Composites and Polymers Co.	(S) Thermoset laminating resin for reinforced composite parts; thermoset closed molding resin for reinforced composite parts	(G) Alkanediol, polymer with 2,5-furandione and 3a,4,7,7a-tetrahydro-4,7-methano-1*H*-indene
P–09–0139	12/24/08	03/23/09	Huntsman Corporation	(G) Dispersant	(S) 1-propanamine, 3-[2-(2-methoxyethoxy)ethoxy]-
P–09–0140	12/24/08	03/23/09	CBI	(G) Resin component	(G) Sodium tetrasilisic mica
P–09–0141	12/29/08	03/28/09	Arkema Inc.	(G) Catalyst	(G) 1,3-ethyl, methylimidazolium undecafluoro substituted ionic methalic species
P–09–0142	12/29/08	03/28/09	Nano-C, Inc.	(S) (1) Compound that functions to improve conductivity in organic electronic devices. (2) Compound used to improve the mechanical properties of lubricants and plastics.	(S) 3,*H*-cyclopropa[1,9][5,6]fullerene-C_{60}-IH-3′-butanoic acid, 3′-phenyl-, methyl ester
P–09–0143	12/29/08	03/28/09	CBI	(S) (1) Compound that functions to improve conductivity in organic electronic devices. (2) Compound used to improve the mechanical properties of lubricants and plastics.	(S) 3,*H*-cyclopropa[8,25][5,6]fullerene-C_{70}-d5h(6)-3′-butanoic acid, 3′-phenyl-, methyl ester
P–09–0144	12/29/08	03/28/09	CBI	(S) (1) Compound that functions to improve conductivity in organic electronic devices. (2) Compound used to improve the mechanical properties of lubricants and plastics.	(S) 3,*H*-cyclopropa[7,22][5,6]fullerene-C_{70}-d5h(6)-3′-butanoic acid, 3′-phenyl-, methyl ester
P–09–0145	12/31/08	03/30/09	CBI	(S) Adhesion promoter for thermoset adhesives	(S) 2-propenoic acid, 2-methyl-, 1,1′-[(3-heptyl-4-pentyl-1,2-cyclohexanediyl)bis(9,1-nonanediyliminocarbonyloxy-2,1-ethanediyl)]ester
P–09–0145	12/31/08	03/30/09	CBI	(S) Adhesion promoter for thermoset adhesives	(S) 2-propenoic acid, 2-methyl-, 2-[[[[9-[3(or 6)-heptyl-2-[9-[[(2-oxiranylmethoxy)carbonyl]amino]nonyl] pentylcyclohexyl]nonyl]amino]carbonyl]oxy]ethyl ester
P–09–0145	12/31/08	03/30/09	CBI	(S) Adhesion promoter for thermoset adhesives	(S) Carbamic acid, *N,N′*-[(3-heptyl-4-pentyl-1,2-cyclohexanediyl)di-9,1-nonanediyl]bis-, *C,C′*-bis(2-oxiranylmethyl) ester
P–09–0146	01/05/09	04/04/09	CBI	(G) Adhesive	(S) Formaldehyde, polymers with acetone-phenol reaction products and phenol, sodium salts

I. 48 PREMANUFACTURE NOTICES RECEIVED FROM: 12/22/08 TO 01/23/09—Continued

Case No.	Received Date	Projected Notice End Date	Manufacturer/Importer	Use	Chemical
P–09–0147	01/05/09	04/04/09	CBI	(G) Adhesive	(S) Formaldehyde, polymers with acetone-phenol reaction products and phenol, potassium sodium salts
P–09–0148	01/06/09	04/05/09	Coim USA Inc.	(S) Rigid foam insulation board	(S) Soybean oil, polymer with diethylene glycol and phthalic anhydride
P–09–0149	01/06/09	04/05/09	Cognis Corporation	(S) Ultra violet offset printing ink for commercial printing and packaging	(S) Fatty acids, C_{18}-unsaturated, dimers, polymers with piperazine and polypropylene glycol monoacrylate ether with gycerol (3:1)
P–09–0150	01/06/09	04/05/09	Hanse Chemie USA, Inc.	(S) Additive to make epoxy resins more flexible	(S) Siloxanes and silicones, di-me, 3-(2-hydroxyphenyl)propyl group-terminated, polymers with bisphenol a diglycidly ether
P–09–0151	01/07/09	04/06/09	CBI	(S) Site limited chemical intermediate	(G) Aminoxylate
P–09–0152	01/07/09	04/06/09	CBI	(S) Acid dye for coloring anodized aluminum	(G) Product is a trivalent chromium complex of an azo dye
P–09–0153	01/07/09	04/06/09	CBI	(S) Acid dye for coloring anodized aluminum	(G) Product is a trivalent chrome complex of an azo dye
P–09–0154	01/08/09	04/07/09	CBI	(G) Processing additive intermediate	(G) Vinylsilane ester
P–09–0155	01/08/09	04/07/09	CBI	(G) Processing additive intermerdiate	(G) Mercaptosilane ester
P–09–0156	01/08/09	04/07/09	CBI	(G) Processing additive	(G) Polysulfide silane
P–09–0157	01/08/09	04/07/09	Futurefuel Chemical Company	(S) Biodiesel fuel	(S) Fatty acids, corn oil, methyl esters
P–09–0158	01/12/09	04/11/09	Cytec Industries Inc.	(G) Coatings resin	(G) Substituted carbomoncyles, polymer with alkanediols
P–09–0159	01/12/09	04/11/09	CBI	(G) Foaming agent	(G) Alcohol ether sulfate amine salt
P–09–0160	01/12/09	04/11/09	ICI-IP America Inc.	(S) Flame retardant for textile	(G) 2-propenoic acid, polymer with butyl 2-propenoate, (2,3,4,5,6-pentabromophenyl) methyl 2-propenoate and substitute acrylates
P–09–0161	01/12/09	04/11/09	ICI-IP America Inc.	(S) Flame retardant for textile	(G) 2-propenoic acid, polymer with butyl 2-propenoate, 2-(2-ethoxyethoxy)ethyl 2-propenoate, (2,3,4,5,6-pentabromophenyl)methyl 2-propenoate, and substitute acrylates
P–09–0162	01/12/09	04/11/09	CBI	(G) Destructive use	(G) Styrenic polymers
P–09–0163	01/14/09	04/13/09	CBI	(S) Reactant for the manufacture of a pesticide	(G) Aminohalogenated alkene ester
P–09–0164	01/14/09	04/13/09	CBI	(G) Scale control additive to reduce precipitation and fouling by calcium salts in aqueous systems	(G) Sodium polyalkylacrylate
P–09–0165	01/14/09	04/13/09	Rahn USA Corp.	(S) Urtra violet/eb inks. The PMN substance acts as a reactive resin in such blends; Ultra violet/eletron beam coatings. The PMN substance acts as a reactive resin in such blends; Ultra violet/eb putty/sealent. The PMN subtance acts as a reactive resin in such blends; Ultra violet/eletron beam adhesives. The PMN substance acts as a reactive resin in such blends; Ultra violet/electron beam = Ultra violet/electron beam reactive formulations	(G) Modified, saturated polyester resin
P–09–0166	01/14/09	04/13/09	PPG Industries, Inc.	(G) Component of coating with open use	(G) Butylated melamine
P–09–0167	01/14/09	04/13/09	CBI	(G) Raw material for oil field applications	(G) Substituted styrene acrylate copolymer
P–09–0168	01/14/09	04/13/09	CBI	(G) Raw material for oil field applications	(G) Substituted styrene acrylate copolymer
P–09–0169	01/15/09	04/14/09	CBI	(S) Resin component for 2 part sealants	(G) Isocyanate terminated polyether polyurethane
P–09–0170	01/15/09	04/14/09	CBI	(S) Resinious component for 2 part sealants	(G) Isocyanate terminated polyether polyurethane

I. 48 PREMANUFACTURE NOTICES RECEIVED FROM: 12/22/08 TO 01/23/09—Continued

Case No.	Received Date	Projected Notice End Date	Manufacturer/Importer	Use	Chemical
P–09–0171	01/15/09	04/14/09	CBI	(S) Reactant used in the manufacture of a pesticide	(G) Halogenated carbamyal benzoyl alkyl sulfamide
P–09–0172	01/21/09	04/20/09	Huntsman International, LLC	(S) Softener padded on cotton fabrics	(G) Substituted carboxylic acid reaction product with substituted amine and amide, acetates
P–09–0173	01/21/09	04/20/09	CBI	(G) Polymer additive, open, non-dispersive use	(G) P-toluate, substituted
P–09–0174	01/21/09	04/20/09	CBI	(G) Textile treatment	(G) Perfluoroalkylethylmethacrylate copolymer
P–09–0175	01/22/09	04/21/09	CBI	(G) Open non-dispersive use (industrial coatings resin)	(G) Aqueous polyurethane resin dispersion
P–09–0176	01/22/09	04/21/09	CBI	(G) Vapor barrier	(G) Fluorinated copolymer
P–09–0177	01/21/09	04/20/09	CBI	(S) Raw material used in ultra violet curable inks and coatings	(G) Aliphatic urethane acrylate

In Table II of this unit, EPA provides the following information (to the extent that such information is not claimed as CBI) on the TMEs received:

II. 1 TEST MARKETING EXEMPTION NOTICE RECEIVED FROM: 12/22/08 TO 1/22/09

Case No.	Received Date	Projected Notice End Date	Manufacturer/Importer	Use	Chemical
T–09–0001	01/12/09	02/25/09	Cytec Industries Inc.	(G) Coatings resin	(G) Substituted carbomoncyles, polymer with alkanediols

In Table III of this unit, EPA provides the following information (to the extent that such information is not claimed as CBI) on the Notices of Commencement to manufacture received:

III. 29 NOTICES OF COMMENCEMENT FROM: 12/22/08 TO 01/22/09

Case No.	Received Date	Commencement Notice End Date	Chemical
P–06–0827	12/29/08	12/02/08	(G) Heterocycle amine, *N*-heterocycle, monoammonium salt
P–07–0447	12/29/08	12/22/08	(G) Fluoroalkyl acrylate copolymer
P–07–0648	01/13/09	12/11/08	(S) Phenol, polymer with formaldehyde, glycidyl ether, polymers with 1,3-benzenedimethanamine, bisphenol a diglycidyl ether, 2-[(C_{12-14}-alkyloxy)methyl]oxirane, epichlorohydrin, 2,2′-[1,2-ethanediylbis(oxy)]bis[ethanamine], polypropylene glycol, polypropylene glycol diglycidyl ether, 2,2′,2″-[1,2,3-propanetriyltris (oxymethylene)]tris[oxirane] and tetraethylenepentamine
P–07–0669	12/23/08	12/16/08	(G) Poly(ethylene oxide)
P–08–0071	01/09/09	11/14/08	(G) Fluorosilicone
P–08–0087	12/19/08	12/03/08	(G) Alkyl acid reaction products with metal salt of alkyl alcohol
P–08–0181	12/30/08	11/25/08	(G) Substituted benzoic acid
P–08–0182	12/23/08	12/04/08	(G) Acid modified alumina
P–08–0201	01/06/09	12/17/08	(G) Aryl phosphoric acid ester
P–08–0315	01/08/09	12/15/08	(G) Hexanedioic acid, polymer with diol and a monohydric alcohol
P–08–0318	01/08/09	11/10/08	(G) 3-hydroxy-4-[(4-methyl-3-substituted)azo]-2-naphthalenecarboxylic acid, calcium salt (1:1)
P–08–0332	01/16/09	12/30/08	(G) Modified olefins
P–08–0339	01/12/09	12/18/08	(G) Dimethylamino alkyl acrylate/dimethylamino alkyl methacrylate polyquaternium ammonium salt
P–08–0392	01/07/09	12/17/08	(G) Carbon nanomaterial
P–08–0407	12/29/08	11/13/08	(G) Vinyl siloxane polymer with hydrogen siloxane
P–08–0497	01/12/09	12/16/08	(G) Alkene-carboxylic acid copolymer salt
P–08–0510	01/08/09	12/15/08	(G) Organosulfide
P–08–0515	01/07/09	12/22/08	(G) Poly(oxyalkylenediyl), maleate half-ester
P–08–0518	01/07/09	12/22/08	(G) Poly(oxyalkylenediyl), substituted maleate half-ester, metal salts
P–08–0622	01/06/09	12/12/08	(G) Barium sulfonate
P–08–0656	01/08/09	12/12/08	(G) Fatty acids, C_{18}-unsaturated, dimers, polymers with diamines and monoacids

III. 29 NOTICES OF COMMENCEMENT FROM: 12/22/08 TO 01/22/09—Continued

Case No.	Received Date	Commencement Notice End Date	Chemical
P–08–0665	01/08/09	12/09/08	(G) Acrylic acid ester polymer with vinyl glycol derivative and cyclic alkene anhydride
P–08–0668	01/08/09	12/23/08	(G) Chlorinated polyolefin
P–08–0680	12/30/08	12/11/08	(S) *N*-[[4-[(cyclopropylamino)carbonyl]phenyl]sulfonyl]-2-methoxybenzamide
P–08–0718	01/14/09	12/23/08	(S) Fatty acids, C_{18}-unsaturated, dimers, hydrogenated, polymers with acrylic acid, methacrylic acid and tricyclodecanedimethanol
P–08–0720	01/14/09	12/29/08	(S) 1,3-benzenedicarboxylic acid, polymers with tricyclodecanedimethanol, mixed bis(acrylates and methacrylates)
P–08–0754	01/15/09	01/07/09	(G) Aryloxyacrylate
P–93–0048	12/19/08	11/14/08	(S) 1*H*-pyrrole-2,5-dione, 1,1′((1-methylethylidene) bis (4,1-phenyleneoxy-4,1-phenylene)) bis-
P–99–0720	12/19/08	12/10/08	(G) Polyester of aromatic and aliphatic carboxylic acids with alkane diols.

List of Subjects

Environmental protection, Chemicals, Premanufacturer notices.

Dated: March 6, 2009.

Chandler Sirmons,

Acting Director, Information Management Division, Office of Pollution Prevention and Toxics.

[FR Doc. E9–8361 Filed 4–10–09; 8:45 am]

BILLING CODE 6560–50–S

ENVIRONMENTAL PROTECTION AGENCY

[EPA–HQ–OPP–2008–0046; FRL–8396–6]

Notice of Receipt of Several Pesticide Petitions Filed for Residues of Pesticide Chemicals in or on Various Commodities

AGENCY: Environmental Protection Agency (EPA).

ACTION: Notice.

SUMMARY: This notice announces the Agency's receipt of several initial filings of pesticide petitions proposing the establishment or modification of regulations for residues of pesticide chemicals in or on various commodities.

DATES: Comments must be received on or before May 13, 2009.

ADDRESSES: Submit your comments, identified by docket identification (ID) number and the pesticide petition number (PP) of interest as shown in the body of this document, by one of the following methods:

• *Federal eRulemaking Portal*: *http://www.regulations.gov*. Follow the on-line instructions for submitting comments.

• *Mail*: Office of Pesticide Programs (OPP) Regulatory Public Docket (7502P), Environmental Protection Agency, 1200 Pennsylvania Ave., NW., Washington, DC 20460–0001.

• *Delivery*: OPP Regulatory Public Docket (7502P), Environmental Protection Agency, Rm. S–4400, One Potomac Yard (South Bldg.), 2777 S. Crystal Dr., Arlington, VA. Deliveries are only accepted during the Docket Facility's normal hours of operation (8:30 a.m. to 4 p.m., Monday through Friday, excluding legal holidays). Special arrangements should be made for deliveries of boxed information. The Docket Facility telephone number is (703) 305–5805.

Instructions: Direct your comments to the docket ID number and the pesticide petition number of interest as shown in the body of this document. EPA's policy is that all comments received will be included in the docket without change and may be made available on-line at *http://www.regulations.gov*, including any personal information provided, unless the comment includes information claimed to be Confidential Business Information (CBI) or other information whose disclosure is restricted by statute. Do not submit information that you consider to be CBI or otherwise protected through regulations.gov or e-mail. The regulations.gov website is an ''anonymous access'' system, which means EPA will not know your identity or contact information unless you provide it in the body of your comment. If you send an e-mail comment directly to EPA without going through regulations.gov, your e-mail address will be automatically captured and included as part of the comment that is placed in the docket and made available on the Internet. If you submit an electronic comment, EPA recommends that you include your name and other contact information in the body of your comment and with any disk or CD-ROM you submit. If EPA cannot read your comment due to technical difficulties and cannot contact you for clarification, EPA may not be able to consider your comment. Electronic files should avoid the use of special characters, any form of encryption, and be free of any defects or viruses.

Docket: All documents in the docket are listed in the docket index available at *http://www.regulations.gov*. Although listed in the index, some information is not publicly available, e.g., CBI or other information whose disclosure is restricted by statute. Certain other material, such as copyrighted material, is not placed on the Internet and will be publicly available only in hard copy form. Publicly available docket materials are available either in the electronic docket at *http://www.regulations.gov*, or, if only available in hard copy, at the OPP Regulatory Public Docket in Rm. S–4400, One Potomac Yard (South Bldg.), 2777 S. Crystal Dr., Arlington, VA. The hours of operation of this Docket Facility are from 8:30 a.m. to 4 p.m., Monday through Friday, excluding legal holidays. The Docket Facility telephone number is (703) 305–5805.

FOR FURTHER INFORMATION CONTACT: A contact person, with telephone number and e-mail address, is listed at the end of each pesticide petition summary. You may also reach each contact person by mail at: Registration Division (7505P), Office of Pesticide Programs, Environmental Protection Agency, 1200 Pennsylvania Ave., NW., Washington, DC 20460–0001.

SUPPLEMENTARY INFORMATION:

I. General Information

A. Does this Action Apply to Me?

You may be potentially affected by this action if you are an agricultural producer, food manufacturer, or pesticide manufacturer. Potentially affected entities may include, but are not limited to:

• Crop production (NAICS code 111).

• Animal production (NAICS code 112).

• Food manufacturing (NAICS code 311).

• Pesticide manufacturing (NAICS code 32532).

This listing is not intended to be exhaustive, but rather provides a guide for readers regarding entities likely to be affected by this action. Other types of entities not listed in this unit could also be affected. The North American Industrial Classification System (NAICS) codes have been provided to assist you and others in determining whether this action might apply to certain entities. If you have any questions regarding the applicability of this action to a particular entity, consult the person listed at the end of the pesticide petition summary of interest.

B. What Should I Consider as I Prepare My Comments for EPA?

1. *Submitting CBI.* Do not submit this information to EPA through regulations.gov or e-mail. Clearly mark the part or all of the information that you claim to be CBI. For CBI information in a disk or CD-ROM that you mail to EPA, mark the outside of the disk or CD-ROM as CBI and then identify electronically within the disk or CD-ROM the specific information that is claimed as CBI. In addition to one complete version of the comment that includes information claimed as CBI, a copy of the comment that does not contain the information claimed as CBI must be submitted for inclusion in the public docket. Information so marked will not be disclosed except in accordance with procedures set forth in 40 CFR part 2.

2. *Tips for preparing your comments.* When submitting comments, remember to:

i. Identify the document by docket ID number and other identifying information (subject heading, **Federal Register** date and page number).

ii. Follow directions. The Agency may ask you to respond to specific questions or organize comments by referencing a Code of Federal Regulations (CFR) part or section number.

iii. Explain why you agree or disagree; suggest alternatives and substitute language for your requested changes.

iv. Describe any assumptions and provide any technical information and/or data that you used.

v. If you estimate potential costs or burdens, explain how you arrived at your estimate in sufficient detail to allow for it to be reproduced.

vi. Provide specific examples to illustrate your concerns and suggest alternatives.

vii. Explain your views as clearly as possible, avoiding the use of profanity or personal threats.

viii. Make sure to submit your comments by the comment period deadline identified.

3. *Environmental justice.* EPA seeks to achieve environmental justice, the fair treatment and meaningful involvement of any group, including minority and/or low-income populations, in the development, implementation, and enforcement of environmental laws, regulations, and policies. To help address potential environmental justice issues, the Agency seeks information on any groups or segments of the population who, as a result of their location, cultural practices, or other factors, may have atypical or disproportionately high and adverse human health impacts or environmental effects from exposure to the pesticides discussed in this document, compared to the general population.

II. What Action is the Agency Taking?

EPA is announcing its receipt of several pesticide petitions filed under section 408 of the Federal Food, Drug, and Cosmetic Act (FFDCA), 21 U.S.C. 346a, proposing the establishment or modification of regulations in 40 CFR part 174 or part 180 for residues of pesticide chemicals in or on various food commodities. EPA has determined that the pesticide petitions described in this notice contain the data or information prescribed in FFDCA section 408(d)(2); however, EPA has not fully evaluated the sufficiency of the submitted data at this time or whether the data support granting of the pesticide petitions. Additional data may be needed before EPA can make a final determination on these pesticide petitions.

Pursuant to 40 CFR 180.7(f), a summary of each of the petitions that are the subject of this notice, prepared by the petitioner, is included in a docket EPA has created for each rulemaking. The docket for each of the petitions is available on-line at *http://www.regulations.gov*.

As specified in FFDCA section 408(d)(3), (21 U.S.C. 346a(d)(3)), EPA is publishing notice of the petition so that the public has an opportunity to comment on this request for the establishment or modification of regulations for residues of pesticides in or on food commodities. Further information on the petition may be obtained through the petition summary referenced in this unit.

New Tolerances

1. *PP 7E7294.* (EPA–HQ–OPP–2008–0854). Dow AgroSciences LLC, 9330 Zionsville Rd., Indianapolis, IN 46268, proposes to establish a tolerance in 40 CFR part 180 for residues of the fungicide meptyldinocap as the parent 2,4-dinitro-6-(1-methylheptyl) phenyl crotonate and the 2,4-dinitro-6-(1-methylheptyl) phenol metabolite in or on grape; grape, wine; or grape, juice at 0.3 parts per million (ppm). This petition is for the establishment of tolerances for meptyldinocap for grapes and processed grapes to cover registered uses of this active ingredient in other countries, e.g., in Europe and Chile, for grapes and wine imported to the United States. The database which supports meptyldinocap builds on the historical relationship of meptyldinocap to dinocap. Dinocap is a mixture of six DNOPC isomers (both ortho and para methylheptyl, ethylhexyl, and propylpentyl crotonate isomers). The new meptyldinocap is an enhanced offering of the single 2,4-DNOPC methylheptyl isomer. Overall, meptyldinocap has an improved toxicological profile relative to the older dinocap. At times, data for dinocap is used as a conservative surrogate for meptyldinocap. Adequate methods are available for determination of meptyldinocap residues in plant commodities. There is a practical, validated method (DOS/220) for the quantification of meptyldinocap and the related phenol metabolite in grapes. Key aspects of the method include conversion of parent 2,4-DNOPC to the phenol metabolite and final quantification based on liquid chromatography/mass spectrometry (LC/MS/MS) of 2,4-DNOP. The level of quantitation (LOQ) for meptyldinocap (as single 2,4-DNOPC methylheptyl isomer) is 0.025 ppm and the level of detection (LOD) is 0.01 ppm for grapes. These levels are suitable for detecting and measuring levels of meptyldinocap in or on food and allow monitoring of food residues at or above the level set for these tolerances. In addition, a multi-residue enforcement method DFG S19 is available. It has been validated successfully for the determination of dinocap in plant materials including grapes. It also relies on confirmation of the phenol derivatives via LC/MS/MS. Contact: Tamue L. Gibson, (703) 305–9096, *gibson.tamue@epa.gov*.

2. *PP 8E7313.* (EPA–HQ–OPP–2008–0840). Syngenta Crop Protection, P.O. Box 18300, Greensboro, NC 27419, proposes to establish a tolerance in 40 CFR part 180 for residues of the fungicide fenpropidin, 1-[3-[4-(1, 1-dimethylethyl) phenyl]-2-methyl-propyl]-piperidine in or on banana, whole fruit at 10 ppm. An adequate, validated method is available for enforcement purposes (method REM

164.09). Residues of fenpropidin are extracted from crop samples by shaking with methanol: Water (80:20, v/v). Extracts are centrifuged and aliquots (1 mL = 0.1 g) are diluted with 90:10:0.2 water: Acetonitrile: Acetic acid (v/v/v). Separation is achieved by high performance liquid chromatography with a Synergi Polar-RP 80A column (50 x 3.0 mm, 4 µm) and a mobile phase gradient of (1) acetonitrile and (2) 0.2% (v/v) acetic acid in water. Final determination is carried out with triple quadrupole mass spectrometric detection (LC-MS/MS, Applied Biosystems API 3000 detector). A primary transition with m/z 274.3 → 147.0 as well as a confirmatory transition with m/z 274.2 → 117.0 are monitored. Quantification is by external standardization. Contact: Tracy Keigwin, (703) 305–6605, *keigwin.tracy@epa.gov*

3. *PP 8E7411*. (EPA–HQ–OPP–2008–0814). Interregional Research Project #4 (IR-4), 500 College Rd. East, Suite 201, Princeton, NJ 08540, proposes to establish a tolerance in 40 CFR part 180 for residues of the insecticide thiamethoxam [3-[(2-chloro-5-thiazolyl)methyl]tetrahydro-5-methyl-N-nitro-4H-1,3,5-oxadiazin-4-imine]; (CAS Reg. No. 153719–23–4) and its metabolite [N-(2-chloro-thiazol-5-ylmethyl)-N'-methyl-N'-nitro-guanidine] in or on vegetable, root, subgroup 1A at 0.04 ppm; avocado at 0.2 ppm; black sapote at 0.2 ppm; canistel at 0.2 ppm; mamey sapote at 0.2 ppm; mango at 0.2 ppm; papaya at 0.2 ppm; sapodilla at 0.2 ppm; and star apple at 0.2 ppm. Syngenta Crop Protection, Inc. has submitted practical analytical methodology for detecting and measuring levels of thiamethoxam in or on raw agricultural commodities. This method is based on crop specific cleanup procedures and determination by liquid chromatography with either ultraviolet (UV) or mass spectrometry (MS) detections. The LOD for each analyte of this method is 1.25 ng injected for samples analyzed by UV and 0.25 ng injected for samples analyzed by MS, and the LOQ is 0.005 ppm for milk and juices, and 0.01 ppm for all other substrates. Contact: Susan Stanton, (703) 305–5218, *stanton.susan@epa.gov*.

4. *PP 8E7470*. (EPA–HQ–OPP–2008–0866). IR-4, 500 College Rd. East, Suite 201, Princeton, NJ 08540, proposes to establish a tolerance in 40 CFR part 180 for residues of the cyromazine, (N-cyclopropyl-1,3,5-triazine-2,4,6-triamine) cyromazine, (N-cyclopropyl-1,3,5-triazine-2,4,6-triamine) in or on bean, succulent at 2.0 ppm. Methods AG-408 and AG-417 as listed in the Food and Drug Administration's Pesticide Analytical Manual (PAM), Volume II are adequate to enforce the proposed tolerances. Contact: Susan Stanton, (703) 305–5218, *stanton.susan@epa.gov*.

5. *PP 7F7264*. (EPA–HQ–OPP–2008–0838). E. I. duPont de Nemours and Company, DuPont Crop Protection, P. O. Box 30, Newark, DE 19714–0030, proposes to establish a tolerance in 40 CFR part 180 for residues of the fungicide flusilazole, (1[[bis(4-fluorophenyl)methyl-silyl]methyl]-1H-1,2,4-triazole) and its metabolite IN-F7321 (bis(4-fluorophenyl) methylsilanol) in or on soybean at 0.04 ppm; soybean, aspirated grain fractions at 2.6 ppm; soybean, refined oil at 0.1 ppm; wheat, grain at 0.15 ppm; wheat, forage at 25 ppm, wheat, straw at 7.0 ppm; wheat, aspirated grain fractions at 6.0 ppm; cattle, fat at 1.5 ppm; cattle, kidney at 5.0 ppm; cattle, liver at 2.0 ppm; cattle, meat and cattle meat byproducts at 0.40 ppm; goat, fat at 1.5 ppm; goat, kidney at 5.0 ppm; goat, liver, at 2.0 ppm; goat, meat and goat, meat byproducts at 0.40 ppm; hog, fat at 1.5 ppm; hog, kidney at 5.0 ppm; hog, liver at 2.0 ppm; hog, meat and hog, meat byproducts at 0.40 ppm; horse, fat at 1.5 ppm; horse, kidney at 5.0 ppm; horse, liver at 2.0 ppm; horse, meat and horse, meat byproducts a 0.40 ppm; milk at 0.20 ppm; milk, fat at 1.3 ppm; sheep, fat at 1.5 ppm; sheep, kidney at 5.0 ppm; sheep, liver at 2.0 ppm; sheep, meat and sheep, meat byproducts at 0.40 ppm. An adequate enforcement method gas chromatography/mass-selective detector (GC/MS) is available to enforce the tolerance expression. The LOQ is 0.01 ppm for flusilazole and IN-F7321 for all applicable wheat and soybean commodities (except wheat straw where the LOQ is 0.02 ppm). The estimated LOD is 0.003 ppm for both flusilazole and IN-F7321 for all applicable wheat and soybean commodities (except wheat straw where the LOD is 0.006 ppm beet; wheat; and wheat, straw and fodder, dry. Contact: Tracy Keigwin, (703) 305–6605, *keigwin.tracy@epa.gov*.

6. *PP 8E7404*. (EPA–HQ–OPP–2008–0876). IR-4, IR4- Project Headquarters, 500 College Rd. East, Suite 201 W, Princeton, NJ 08540, proposes to establish a tolerance in 40 CFR part 180 for the combined residues of the herbicide pendimethalin [N-(1-ethylpropyl)-3,4-dimethyl-2,6-dinitrobenzenamine] and its metabolite, 4-[(1-ethylpropyl)amino]-2-methyl-3, 5-dinitrobenzyl alcohol in or on olive at 0.1 ppm. A practical analytical method of quantifying pendimethalin residues in plants is aqueous organic solvent extraction, column clean up, and quantitation by GS. The method has a LOQ of 0.05 ppm for pendimethalin and the alcohol metabolite. Contact: Sidney Jackson, (703) 305–7610, *jackson.sidney@epa.gov*.

7. *PP 8E7460*. (EPA–HQ–OPP–2008–0945). IR-4, Project Headquarters, Rutgers, The State University of New Jersey, 500 College Rd. East, Suite 201 W, Princeton, NJ 08540, proposes to establish a tolerance in 40 CFR part 180 for residues of the insecticide clothianidin, (E)-1-(2-chloro-1,3-thiazol-5-ylmethyl)-3-methyl-2-nitroguanidine, in or on berry, low growing, subgroup 13-07H, except strawberry at 0.01 ppm; peach at 0.70 ppm; and vegetable, tuberous and corm, subgroup 1C at 0.05 ppm. Adequate enforcement methodology LC/MS/MS analysis is available to enforce the tolerance expression. Contact: Laura Nollen, (703) 305–7390, *nollen.laura@epa.gov*.

8. *PP 8F7396*. (EPA–HQ–OPP–2008–0876). BASF Corporation, 26 Davis Dr., Research Triangle Park, NC 27709, proposes to establish a tolerance in 40 CFR part 180 for the combined residues of the herbicide pendimethalin, N-(1-ethylpropyl)-3,4-dimethyl-2,6dinitrobenzenamine, and its metabolite 4-[(1-ethylpropyl)amino]-2-methyl-3, 5-dinitrobenzyl alcohol in or on forage, forage grasses, group 17 at 40 ppm; hay, forage grasses, group 17 at 80 ppm; straw, forage grasses, group 17 at 4.5 ppm; and to establish a tolerance in 40 CFR part 180 for the combined residues of the herbicide pendimethalin, N-(1-ethylpropyl)-3,4-dimethyl-2,6dinitrobenzenamine and its metabolites 4-[(1-ethylpropyl)amino]-2-methyl-3, 5-dinitrobenzyl alcohol and 1-(1-ethyl-propyl)-5, 6 dimethyl-7-nitro-1H-benzoimidazole in or on animal commodities milk at 0.03 ppm and meat at 0.15 ppm. The method in plants is aqueous organic solvent extraction, column clean up, and quantitation by GC. The method has a LOQ of 0.05 ppm for pendimethalin and the alcohol metabolite. Contact: Mindy Ondish, (703) 605–0723, *ondish.mindy@epa.gov*.

9. *PP 8E7462*. (EPA–HQ–OPP–2008–0885). IR-4, Project Headquarters, Rutgers, The State University of New Jersey, 500 College Rd. East, Suite 201 W, Princeton, NJ 08540, proposes to establish a tolerance in 40 CFR part 180 for residues of the herbicide flumioxazin, 2-[7-fluoro-3,4-dihydro-3-oxo-4-(2-propynyl)-2H-1,4-benzoxazin-6-yl]-4,5,6,7-tetrahydro-1H-isoindole-1,3(2H)-dione in or on vegetable, cucurbit, group 9 at 0.03 ppm; leaf petioles, subgroup 4B at 0.02 ppm; and hop, dried cones at 0.07 ppm. Practical analytical methods for detecting and

measuring levels of flumioxazin have been developed and validated in/on all appropriate agricultural commodities and respective processing fractions. The LOQ of flumioxazin in the methods is 0.02 ppm which will allow monitoring of food with residues at the levels proposed for the tolerances. Contact: Laura Nollen, (703) 305–7390, *nollen.laura@epa.gov*.

10. *PP 8E7473*. (EPA–HQ–OPP–2008–0887). IR-4, Rutgers University, 500 College Rd. East, Suite 201W, Princeton, NJ 08540, proposes to establish a tolerance in 40 CFR part 180 for residues of the fungicide propamocarb hydrochloride; propyl[3-(dimethylamino)propyl]carbamate mono-hydrochloride in or on bean, lima, succulent at 2.0 ppm. A practical analytical method utilizing gas/liquid chromatography and N-FID or mass spectrometry detection (MSD) is available and has been validated for detecting and measuring levels of propamocarb hydrochloride in or on food. The LOQ is 0.05 miligrams/kilograms (mg/kg) ppm. Contact: Susan Stanton, (703) 305–5218, *stanton.susan@epa.gov*.

11. *PP 8E7476*. (EPA–HQ–OPP–2008–0886). IR-4, 500 College Rd. East, Suite 201W, Princeton, NJ 08540, proposes to establish a tolerance in 40 CFR part 180 for residues of the insecticide formetanate hydrochloride (N,N-dimethyl-N′-[3-[[(methylamino)carbonyl]oxy]phenyl] methanimidamide) in or on onion, bulb, subgroup 3-07A at 0.06 ppm. A validated residue analytical method exists for quantitation of formetanate residues in onion. Samples are extracted with buffered organic solvent and the formetanate in the resulting extract is purified through a C-18 cartridge. Residues were identified and quantified by HPLC-MS/MS. The method has a LOQ of 0.002 ppm and a LOD of 0.0007 ppm. The method was validated by fortifying onions from a control site fortified to 0.002, 0.05, and 1.0 ppm. The average recovery was 89 ± 13%. Contact: Susan Stanton, (703) 305–5218, *stanton.susan@epa.gov*.

Amended Tolerances

1. *PP 8E7411*. (EPA–HQ–OPP–2008–0814). IR-4, 500 College Rd. East, Suite 201, Princeton, NJ 08540, proposes to revise the tolerance expression for the Berry Crop Group 13 to become the Berry and Small Fruit Crop Group 13 per the Pesticide Tolerance Crop Grouping Program published in the **Federal Register**, December 7, 2007 (72 FR 69150; FRL–8343–1). The proposed new tolerance expressions for the Berry and Small Crop group 13 for the tolerances in 40 CFR 180.565 for residues of the insecticide thiamethoxam [3-[(2-chloro-5-thiazolyl)methyl]tetrahydro-5-methyl-N-nitro-4H-1,3,5-oxadiazin-4-imine](CAS Reg. No. 153719–23–4) and its metabolite [N-(2-chloro-thiazol-5-ylmethyl)-N'-methyl-N'-nitro-guanidine] are as follows in or on: Caneberry subgroup 13-07A at 0.35 ppm; bushberry subgroup 13-07B at 0.2 ppm; fruit, small, vine climbing subgroup 13-07F, except fuzzy kiwifruit at 0.2 ppm; low growing berry subgroup 13-07G, except cranberry at 0.3 ppm. The existing tolerance on cranberry at 0.02 ppm will not be changed. Also, the IR-4 is requesting the following tolerances be deleted: Vegetable, root, except sugar beet, subgroup 1B at 0.02 ppm; caneberry subgroup 13A at 0.35 ppm; bushberry subgroup 13B at 0.20 ppm; grape at 0.20 ppm; strawberry at 0.30 ppm; lingonberry at 0.20 ppm; juneberry at 0.20 ppm; and salal at 0.20 ppm. Syngenta Crop Protection, Inc. has submitted practical analytical methodology for detecting and measuring levels of thiamethoxam in or on raw agricultural commodities. This method is based on crop specific cleanup procedures and determination by liquid chromatography with either UV or MS detections. The LOD for each analyte of this method is 1.25 ng injected for samples analyzed by UV and 0.25 ng injected for samples analyzed by MS, and the LOQ is 0.005 ppm for milk and juices, and 0.01 ppm for all other substrates. Contact: Susan Stanton, (703) 305–5218, *stanton.susan@epa.gov*.

2. *PP 8F7416*. (EPA–HQ–OPP–2008–0771). Bayer CropScience, P.O. Box 12014, 2 T.W. Alexander Dr., Research Triangle Park, NC 27709, proposes to amend the tolerance in 40 CFR 180.586 by increasing the tolerance for residues of the insecticide clothianidin, (E)-1-(2-chloro-1,3-thiazol-5-ylmethyl)-3-methyl-2-nitroguanidine and its metabolite, TMG, N-(2-chloro-5-thiazolylmethyl)-N'-methylguanidine in or on potato from 0.05 ppm to 0.6 ppm. In plants and plant products, the residue of concern, parent clothianidin and its metabolite, TMG, N-(2-chloro-5-thiazolylmethyl)-N'-methylguanidine], can be determined using HPLC with Electrospray MS/MS detection. In an extraction efficiency testing, the plant residues method has also demonstrated the ability to extract aged clothianidin residue. Although the plant residues LC-MS/MS method is highly suitable for enforcement method, an LC-UV method has also been developed which is suitable for enforcement (monitoring) purposes in all relevant matrices. Contact: Kable Bo Davis, (703) 306–0415, *davis.kable@epa.gov*.

3. *PP 8E7460*. (EPA–HQ–OPP–2008–0945). IR-4, IR-4 Project Headquarters, Rutgers, The State University of New Jersey, 500 College Rd. East, Suite 201 W, Princeton, NJ 08450, proposes to delete the tolerance in 40 CFR 180.586 for residues of the insecticide clothianidin, (E)-1-(2-chloro-1,3-thiazol-5-ylmethyl)-3-methyl-2-nitroguanidine, in or on potato at 0.05 ppm since it will be superseded by the proposed tolerance on subgroup 1C in paragraph 7. under ''New Tolerances'' in this unit. Contact: Laura Nollen, (703) 305–7390, *nollen.laura@epa.gov*.

4. *PP 8E7462*. (EPA–HQ–OPP–2008–0885). The IR-4 Project Headquarters, 500 College Rd. East, Suite 201 W, Princeton, NJ 08540, proposes to amend the tolerances in 40 CFR 180.568 by revoking the existing tolerance for residues of the herbicide flumioxazin, 2-[7-fluoro-3,4-dihydro-3-oxo-4-(2-propynyl)-2H-1,4-benzoxazin-6-yl]-4,5,6,7-tetrahydro-1H-isoindole-1,3(2H)-dione in or on almonds because a tolerance on nut, tree, group 14 has been established; and by deleting the existing tolerance for melon subgroup 9A because it will be superseded by the proposed tolerance for cucurbit, group 9 in the section ''New Tolerances'' in paragraph 9. in this unit. Practical analytical methods for detecting and measuring levels of flumioxazin have been developed and validated in/on all appropriate agricultural commodities and respective processing fractions. The LOQ of flumioxazin in the methods is 0.02 ppm which will allow monitoring of food with residues at the levels proposed for the tolerances. Contact: Laura Nollen, (703) 305–7390, *nollen.laura@epa.gov*.

New Tolerance Exemptions

1. *PP 8E7316*. (EPA–HQ–OPP–2008–0858). Rhodia Inc. c/o SciReg, Inc., 12733 Director's Loop, Woodbridge, VA 22192, proposes to establish an exemption from the requirement of a tolerance in 40 CFR 180.920 for residues of the alkyl (C10-C16) dimethylamine oxide (CAS No. 70592–80–2) in or on growing crops when used as a wetting-agent in pesticide formulations applied pre-harvest to all raw agricultural commodities. Because this petition is a request for an exemption from the requirement of a tolerance, no analytical method is required. Contact: Lisa Austin, (703) 305–7894, *austin.lisa@epa.gov*.

2. *PP 8E7457*. (EPA–HQ–OPP–2008–0851). International Specialty Products, c/o Steptoe & Johnson, LLP, 1330

Connecticut Ave., NW., Washington, DC 20036, proposes to establish an exemption from the requirement of a tolerance in 40 CFR 180.960 for residues of 2-Butenedioic acid (2Z)-, monobutyl ester, polymer with methoxyethene, sodium salt, minimum number average molecular weight of 18,200 amu (CAS No. 205193–99–3) when used as a pesticide inert ingredient in pesticide formulations. Because this petition is a request for an exemption from the requirement of a tolerance, no analytical method is required. Contact: Deirdre Sunderland, (703) 603–0851, *sunderland.deirdre@epa.gov*.

3. *PP 8E7469*. (EPA–HQ–OPP–2008–0861). BASF Corporation, 100 Campus Drive, Florham Park, NJ 07932, proposes to establish an exemption from the requirement of a tolerance in 40 CFR 180.960 for residues of Oxirane, 2-methyl-, polymer with oxirane (CAS No. 9003–11–6) when used as a pesticide inert ingredient as a surfactant in pesticide formulations without limitations. Because this petition is a request for an exemption from the requirement of a tolerance, no analytical method is required. Contact: Lisa Austin, (703) 305–7894, *austin.lisa@epa.gov*.

4. *PP 8E7453*. (EPA–HQ–OPP–2008–0856). Kemira Chemicals, Inc., 1950 Vaughn Rd., Kennesaw, GA 30144, proposes to establish an exemption from the requirement of a tolerance for residues of starch, oxidized, polymers with Bu acrylate, tert-Bu acrylate and styrene, minimum number average molecular weight (in amu) 10,000 (CAS No. 204142–80–3) hereafter referred to as styrene-butylacrylate copolymer, under 40 CFR 180.960, when used as a pesticide inert ingredient in pesticide formulations in or on all food commodities without numerical limitations. Because this petition is a request for an exemption from the requirement of a tolerance, no analytical method is required. Contact: Deirdre Sunderland, (703) 603–0851, *sunderland.deirdre@epa.gov*.

List of Subjects

Environmental protection, Agricultural commodities, Feed additives, Food additives, Pesticides and pests, Reporting and recordkeeping requirements.

Dated: April 3, 2009.

Lois Rossi,

Director, Registration Division, Office of Pesticide Programs.

[FR Doc. E9–8348 Filed 4–10–09; 8:45 am]

BILLING CODE 6560–50–S

FEDERAL COMMUNICATIONS COMMISSION

[Report No. 2886]

Petitions for Reconsideration of Action in Rulemaking Proceeding

April 6, 2009.

Petitions for Reconsideration have been filed in the Commission's Rulemaking proceeding listed in this Public Notice and published pursuant to 47 CFR 1.429(e). The full text of these documents is available for viewing and copying in Room CY–B402, 445 12th Street, SW., Washington, DC or may be purchased from the Commission's copy contractor, Best Copy and Printing, Inc. (BCPI) (1–800–378–3160). Oppositions to these petitions must be filed by April 28, 2009. *See* Section 1.4(b)(1) of the Commission's rules (47 CFR 1.4(b)(1). Replies to oppositions must be filed within 10 days after the time for filing oppositions have expired.

Subject: In the Matter of Unlicensed Operation in the TV Broadcast Bands (ET Docket No. 04–186), Additional Spectrum for Unlicensed Devices below 900 MHz and in the 3 GHz Band (ET Docket No. 02–380).

Number of Petitions Filed: 17.

Marlene H. Dortch,

Secretary.

[FR Doc. E9–8397 Filed 4–10–09; 8:45 am]

BILLING CODE 6712–01–P

FEDERAL DEPOSIT INSURANCE CORPORATION

Sunshine Act; Notice of Agency Meeting

Pursuant to the provisions of the ''Government in the Sunshine Act'' (5 U.S.C. 552b), notice is hereby given that at 4:34 p.m. on Wednesday, April 8, 2009, the Board of Directors of the Federal Deposit Insurance Corporation met in closed session to consider matters related to resolution activities.

In calling the meeting, the Board determined, on motion of Vice Chairman Martin J. Gruenberg, seconded by Director Thomas J. Curry (Appointive), concurred in by Acting Director John E. Bowman (Office of Thrift Supervision), Director John C. Dugan (Comptroller of the Currency), and Chairman Sheila C. Bair, that Corporation business required its consideration of the matters which were to be the subject of this meeting on less than seven days' notice to the public; that no earlier notice of the meeting was practicable; that the public interest did not require consideration of the matters in a meeting open to public observation; and that the matters could be considered in a closed meeting by authority of subsections (c)(4), (c)(6), (c)(8), (c)(9)(A)(ii) and (c)(9)(B) of the ''Government in the Sunshine Act'' (5 U.S.C. 552b(c)(4), (c)(6), (c)(8), (c)(9)(A)(ii), and (c)(9)(B)).

The meeting was held in the Board Room of the FDIC Building located at 550 17th Street, NW., Washington, DC.

Dated: April 8, 2009.

Federal Deposit Insurance Corporation.

Robert E. Feldman,

Executive Secretary.

[FR Doc. E9–8445 Filed 4–9–09; 11:15 am]

BILLING CODE

FEDERAL RESERVE SYSTEM

Formations of, Acquisitions by, and Mergers of Bank Holding Companies

The companies listed in this notice have applied to the Board for approval, pursuant to the Bank Holding Company Act of 1956 (12 U.S.C. 1841 *et seq.*) (BHC Act), Regulation Y (12 CFR Part 225), and all other applicable statutes and regulations to become a bank holding company and/or to acquire the assets or the ownership of, control of, or the power to vote shares of a bank or bank holding company and all of the banks and nonbanking companies owned by the bank holding company, including the companies listed below.

The applications listed below, as well as other related filings required by the Board, are available for immediate inspection at the Federal Reserve Bank indicated. The applications also will be available for inspection at the offices of the Board of Governors. Interested persons may express their views in writing on the standards enumerated in the BHC Act (12 U.S.C. 1842(c)). If the proposal also involves the acquisition of a nonbanking company, the review also includes whether the acquisition of the nonbanking company complies with the standards in section 4 of the BHC Act (12 U.S.C. 1843). Unless otherwise noted, nonbanking activities will be conducted throughout the United States. Additional information on all bank holding companies may be obtained from the National Information Center website at *www.ffiec.gov/nic/*.

Unless otherwise noted, comments regarding each of these applications must be received at the Reserve Bank indicated or the offices of the Board of Governors not later than May 8, 2009.

A. Federal Reserve Bank of Richmond (A. Linwood Gill, III, Vice

President) 701 East Byrd Street, Richmond, Virginia 23261–4528:

1. MidCap Financial Holdings, LLC, and MidCap Bank Holdings, Inc., both of Bethesda, Maryland, to become bank holding companies by acquiring 100 percent of the voting shares of ISN Bank, Cherry Hill, New Jersey.

In connection with this application, MidCap Financial Holdings, LLC, Bethesda, Maryland, also has applied to engage in extending credit and servicing loans through MidCap Financial Intermediate Holdings, LLC; MidCap Financial, LLC; and MidCap Funding I, LLC, all of Bethesda, Maryland, pursuant to section 225.28(b)(1) of Regulation Y.

Board of Governors of the Federal Reserve System, April 8, 2009.

Robert deV. Frierson,

Deputy Secretary of the Board.

[FR Doc. E9–8327 Filed 4–10–09; 8:45 am]

BILLING CODE 6210–01–S

GENERAL SERVICES ADMINISTRATION

Multiple Award Schedule Advisory Panel; Notification of Public Advisory Panel Meetings

AGENCY: U.S. General Services Administration (GSA).

ACTION: Notice.

SUMMARY: The U.S. General Services Administration (GSA) Multiple Award Schedule Advisory Panel (MAS Panel), a Federal Advisory Committee, will hold a public meeting on Friday, May 1, 2009. GSA utilizes the MAS program to establish long-term Governmentwide contracts with responsible firms to provide Federal, State, and local government customers with access to a wide variety of commercial supplies (products) and services.

The MAS Panel was established to develop advice and recommendations on MAS program pricing policies, provisions, and procedures in the context of current commercial pricing practices. The Panel is developing recommendations for MAS program pricing provisions for the acquisition of (1) professional services; (2) products; (3) total solutions which consist of professional services and products; and (4) non professional services. In developing the recommendations, the Panel will, at a minimum, address these 5 questions for each of the 4 types of acquisitions envisioned above: (1) Where does competition take place?; (2) If competition takes place primarily at the task/delivery order level, does a fair and reasonable price determination at the MAS contract level really matter?; (3) If the Panel consensus is that competition is at the task order level, are the methods that GSA uses to determine fair and reasonable prices and maintain the price/discount relationship with the basis of award customer(s) adequate?; (4) If the current policy is not adequate, what are the recommendations to improve the policy/guidance; and (5) If fair and reasonable price determination at the MAS contract level is not beneficial and the fair and reasonable price determination is to be determined only at the task/delivery order level, then what is the GSA role?

The meeting will be held at U.S. General Services Administration, Federal Acquisition Service, 2200 Crystal Drive, Room L1301, Arlington, VA 22202. The location is within walking distance of the Crystal City metro stop. The start time for each meeting is 9 a.m., and each meeting will adjourn no later than 5 p.m.

FOR FURTHER INFORMATION CONTACT: Information on the Panel meetings, agendas, and other information can be obtained at *www.gsa.gov/masadvisorypanel* or you may contact Ms. Pat Brooks, Designated Federal Officer, Multiple Award Schedule Advisory Panel, U.S. General Services Administration, 2011 Crystal Drive, Suite 911, Arlington, VA 22205; telephone (703) 605–3406, Fax (703) 605–3454; or via email at *mas.advisorypanel@gsa.gov*.

AVAILABILITY OF MATERIALS: All meeting materials, including meeting agendas, handouts, public comments, and meeting minutes will be posted on the MAS Panel website at *www.gsa.gov/masadvisorypanel* or *www.gsa.gov/masap*.

MEETING ACCESS: Individuals requiring special accommodations at any of these meetings should contact Ms. Brooks at least ten (10) business days prior to the meeting date so that appropriate arrangements can be made.

Dated: April 7, 2009.

Rodney P. Lantier,

Acting Deputy Chief Acquisition Officer and Senior Procurement Executive, Office of the Chief Acquisition Officer, General Services Administration.

[FR Doc. E9–8320 Filed 4–10–09; 8:45 am]

BILLING CODE 6820–EP–S

DEPARTMENT OF HEALTH AND HUMAN SERVICES

Meeting of the Advisory Committee on Blood Safety and Availability

AGENCY: Department of Health and Human Services, Office of the Secretary.

ACTION: Notice.

SUMMARY: As stipulated by the Federal Advisory Committee Act, the U.S. Department of Health and Human Services is hereby giving notice that the Advisory Committee on Blood Safety and Availability (ACBSA) will hold a meeting. The meeting will be open to the public.

DATES: The meeting will take place Thursday, April 30 and Friday, May 1, 2009 from 9 a.m. to 5 p.m.

ADDRESSES: The Universities at Shady Grove, 9630 Gudelsky Drive, Rockville, MD 20850, Phone: 301–738–6000.

FOR FURTHER INFORMATION CONTACT: Jerry A. Holmberg, PhD, Executive Secretary, Advisory Committee on Blood Safety and Availability, Office of Public Health and Science, Department of Health and Human Services, 1101 Wootton Parkway, Suite 250, Rockville, MD 20852, (240) 453–8803, FAX (240) 453–8456, e-mail *ACBSA@hhs.gov*.

SUPPLEMENTARY INFORMATION: The Advisory Committee on Blood Safety and Availability provides advice to the Secretary and the Assistant Secretary for Health on a range of policy issues that impact (1) definition of public health parameters around safety and availability of the blood supply and blood products, (2) broad public health, ethical and legal issues related to transfusion and transplantation safety, and (3) the implications for safety and the availability of various economic factors affecting product cost and supply. In keeping with its established mission, the ACBSA has been asked to explore processes and parameters which should be used in the decision-making process for transfusion and transplantation safety policy. At the April 30 to May 1, 2009 meeting, the Committee will be asked to comment on evidenced-based, zero-risk, cost, benefit and comparative effectiveness, societal position or mandate, ethical, and stakeholders concerns.

The public will have opportunity to present their views to the Committee on both meeting days. A public comment session has been scheduled for April 30 and May 1, 2009. Comments will be limited to five minutes per speaker and must be pertinent to the discussion. Pre-registration is required for participation in the public comment session. Any

member of the public who would like to participate in this session is encouraged to contact the Executive Secretary at his/her earliest convenience. It is requested that those who wish to have printed material distributed to the Committee provide thirty (30) copies of the document to be distributed to the Executive Secretary, ACBSA, prior to close of business April 27, 2009. If it is not possible to provide 30 copies of the material to be distributed, then individuals are requested to provide at a minimum one (1) copy of the document(s) to be distributed prior to the close of business April 27, 2009. It also is requested that any member of the public who wishes to provide comments to the Committee utilizing electronic data projection submit the necessary material to the Executive Secretary prior to close of business April 27, 2009.

Dated: April 8, 2009.

Jerry A. Holmberg,

Executive Secretary, Advisory Committee on Blood Safety and Availability.

[FR Doc. E9–8398 Filed 4–10–09; 8:45 am]

BILLING CODE 4140–41–P

DEPARTMENT OF HEALTH AND HUMAN SERVICES

Solicitation of Written Comments on Draft National Vaccine Advisory Committee Vaccine Safety Working Group Recommendations to the Immunization Safety Office

AGENCY: Department of Health and Human Services, Office of the Secretary.

ACTION: Notice.

SUMMARY: The National Vaccine Program Office (NVPO) is soliciting public comment on the National Vaccine Advisory Committee (NVAC) Vaccine Safety Working Group draft Recommendations to the Centers for Disease Control and Prevention's Immunization Safety Office (ISO).

DATES: Comments on the NVAC Vaccine Safety Working Group draft report should be received no later than 5 p.m. on May 13, 2009.

ADDRESSES: Electronic responses are preferred and may be addressed to *vaccinesafetyRFI@hhs.gov*. Written responses should be addressed to National Vaccine Program Office, U.S. Department of Health and Human Services, 200 Independence Avenue, SW., Room 715–H, Washington, DC 20201, Attention: Vaccine Safety RFI.

FOR FURTHER INFORMATION CONTACT: Ms. Kirsten Vannice, National Vaccine Program Office, Department of Health and Human Services, Hubert H. Humphrey Building, 200 Independence Avenue, SW., Room 443–H, Washington, DC 20201; telephone (202) 690–5566; fax 202–260–1165; e-mail *vaccinesafetyRFI@hhs.gov*.

SUPPLEMENTARY INFORMATION:

I. Background

Ensuring the optimal safety of vaccines and immunizations is important to everyone. The National Vaccine Program Office (NVPO) is located within the Office of Public Health and Science, Office of the Secretary, Department of Health and Human Services (HHS), and has responsibility for coordinating and ensuring collaboration among the many Federal agencies involved in vaccine and immunization activities. NVPO also has responsibility for managing and providing support services for the National Vaccine Advisory Committee (NVAC). NVAC is a statutory Federal advisory committee that was established to provide advice and make recommendations to the Director of the National Vaccine Program on matters related to the Program's responsibilities. The Assistant Secretary for Health serves as Director of the National Vaccine Program.

The Centers for Disease Control and Prevention's (CDC) Immunization Safety Office (ISO) has significant responsibility for monitoring and studying the safety of vaccines after they are licensed and used in the United States (*http://www.cdc.gov/vaccinesafety*). ISO has drafted a five-year scientific agenda that identifies vaccine safety issues to consider for scientific study, in addition to any new questions that may arise. The draft ISO Scientific Agenda can be found at: *http://www.cdc.gov/vaccinesafety/00_pdf/draft_agenda_recommendations_080404.pdf* and the addendum at *http://www.cdc.gov/vaccinesafety/00_pdf/draft_recommendations_add_080410.pdf.*

Since not all questions and issues can be addressed at once, setting priorities is also important, and ISO has requested a review of the draft Scientific Agenda by the National Vaccine Advisory Committee (NVAC) for the purpose of identifying gaps and setting priorities. The NVAC Vaccine Safety Working Group has written a draft report of recommendations on the content and priorities of the draft ISO Scientific Agenda. The draft report may be found at *http://www.hhs.gov/nvpo/nvac/reports.html*.

Through this request for information (RFI) HHS is seeking comments from everyone, including stakeholders and the broad public, on the NVAC Vaccine Safety Working Group draft report. Comments received will be available for public viewing on the NVAC Vaccine Safety Working Group Web site (*http://www.hhs.gov/nvpo/nvac/vaccinesafety.html*).

II. Information Request

NVPO, on behalf of the NVAC Vaccine Safety Working Group, requests input on the draft Working Group report (*http://www.hhs.gov/nvpo/nvac/reports.html*). In addition to general comments, NVPO is seeking input on any additional gaps not addressed in the ISO Scientific Agenda nor the NVAC Vaccine Safety Working Group draft report, and/or prioritization criteria and its application to the ISO Scientific Agenda.

Please limit comments to 6 pages.

III. Potential Responders

HHS invites input from a broad range of individuals and organizations that have interests in vaccines and vaccine safety. Some examples of these organizations include but are not limited to the following:

—General public;
—Advocacy groups and public interest organizations;
—State and local governments;
—State and local public health departments;
—Vaccine manufacturing industry, distributors and other businesses;
—Health care professional societies and organizations.

When responding, please self-identify with any of the above or other categories (include all that apply) and your name. All comments submitted will be made publicly available. Anonymous submissions will not have their comments posted and will not be considered.

The submission of written materials in response to the RFI should not exceed six pages, not including appendices and supplemental documents. Responders may submit other forms of electronic materials to demonstrate or exhibit concepts of their written responses. Any information you submit will be made public. Consequently, do not send proprietary, commercial, financial, business confidential, trade secret, or personal information that you do not wish to be made public.

Public Access: Responses to this RFI will be available to the public on the NVAC Web site at *http://www.hhs.gov/nvpo/nvac/vaccinesafety.html*. You may access public comments received from this RFI by going to the above Web site.

Dated: March 31, 2009.

Bruce G. Gellin,

Deputy Assistant Secretary for Health, Director, National Vaccine Program Office, U.S. Department of Health and Human Services.

[FR Doc. E9–8399 Filed 4–10–09; 8:45 am]

BILLING CODE 4150–44–P

DEPARTMENT OF HEALTH AND HUMAN SERVICES

Centers for Disease Control and Prevention

[60Day–09–08AU]

Proposed Data Collections Submitted for Public Comment and Recommendations

In compliance with the requirement of Section 3506(c)(2)(A) of the Paperwork Reduction Act of 1995 for opportunity for public comment on proposed data collection projects, the Centers for Disease Control and Prevention (CDC) will publish periodic summaries of proposed projects. To request more information on the proposed projects or to obtain a copy of the data collection plans and instruments, call 404–639–5960 and send comments to Maryam Daneshvar, CDC Acting Reports Clearance Officer, 1600 Clifton Road, MS–D74, Atlanta, GA 30333 or send an e-mail to *omb@cdc.gov*.

Comments are invited on: (a) Whether the proposed collection of information is necessary for the proper performance of the functions of the agency, including whether the information shall have practical utility; (b) the accuracy of the agency's estimate of the burden of the proposed collection of information; (c) ways to enhance the quality, utility, and clarity of the information to be collected; and (d) ways to minimize the burden of the collection of information on respondents, including through the use of automated collection techniques or other forms of information technology. Written comments should be received within 60 days of this notice.

Proposed Project

Assessing Problem Areas in Referrals for Chronic Hematologic Malignancies and Developing Interventions to Address Them—New—Division of Cancer Prevention and Control, National Center for Chronic Disease Prevention and Health Promotion (NCCDPHP), Centers for Disease Control and Prevention (CDC).

Background and Brief Description

One of the six aims of the Institute of Medicine's Crossing the Quality Chasm report is to improve the timeliness of care for patients. Data from Europe and Canada, as well as single-site studies in the United States, allude to a problem of timely referral and diagnosis for patients with cancer. Despite the advent of new diagnostics and therapeutics for patients with chronic hematological malignancies, the size and scope of a potential problem regarding their referral from primary care providers to specialists is not well-defined in the current literature.

CDC proposes to conduct a one-time study to collect qualitative and quantitative information on optimal and sub-optimal referral patterns for patients with confirmed or suspected chronic hematologic malignancies. Information will be collected to identify specific factors related to delays in diagnosis and/or referral to appropriate medical specialists. Information will be collected through in-depth interviews with hematologic cancer patients, in-depth interviews and focus groups with primary care providers, interviews with specialists in hematology and oncology in Texas, and a one-time postal survey to a sample of primary care providers in Massachusetts.

The ultimate goal is to develop tools that will improve the awareness, diagnosis, and referral of persons with chronic hematological cancers by primary care providers.

There are no costs to respondents other than their time.

ESTIMATED ANNUALIZED BURDEN HOURS

Type of respondents	Form name	Number of respondents	Number of responses per respondent	Avg. burden per response (in hrs)	Total burden (in hours)
Community Hematologists and Oncologists.	Hematologists and Oncologists Interview Phone Recruitment Script.	100	1	2/60	3
	Hematologists and Oncologists Interview Guide.	18	1	1.5	27
Patients	Patient Interview Phone Recruitment Script.	50	1	2/60	2
	Patient Interview Guide	18	1	1.5	27
Primary Care Providers (PCP)	PCP Survey Cover Letter	250	1	2/60	8
	PCP Survey	150	1	20/60	50
	PCP Opt-Out Card	100	1	2/60	3
	PCP Survey Reminder Letter	200	1	2/60	7
	PCP Interview Phone Recruitment Script.	100	1	3/60	5
	PCP Interview Guide	18	1	1.5	27
	PCP Focus Group Phone Recruitment Script.	50	1	3/60	3
	PCP Focus Group Guide	18	1	2	36
Total					198

Dated: April 6, 2009.

Maryam I. Daneshvar,

Acting Reports Clearance Officer, Centers for Disease Control and Prevention.

[FR Doc. E9–8337 Filed 4–10–09; 8:45 am]

BILLING CODE 4163–18–P

DEPARTMENT OF HEALTH AND HUMAN SERVICES

Administration on Aging

Agency Information Collection Activities; Proposed Collection; Comment Request; SMP (Formerly Senior Medicare Patrol) Program Outcome Measurement

AGENCY: Administration on Aging, HHS.

ACTION: Notice.

SUMMARY: The Administration on Aging (AoA) is announcing an opportunity for public comment on the proposed collection of certain information by the agency. Under the Paperwork Reduction Act of 1995 (the PRA), Federal agencies are required to publish notice in the **Federal Register** concerning each proposed collection of information, including each proposed extension of an existing collection of information, and to allow 60 days for public comment in response to the notice. This notice solicits comments on the information collection requirements relating to SMP (formerly Senior Medicare Patrol) Program outcome measurement.

DATES: Submit written or electronic comments on the collection of information by June 12, 2009.

ADDRESSES: Submit electronic comments on the collection of information to: *doris.summey@aoa.hhs.gov*.

Submit written comments on the collection of information to Administration on Aging, Washington, DC 20201. Attention: Doris Summey.

FOR FURTHER INFORMATION CONTACT: Doris Summey, by telephone: (202) 357–3533 or by e-mail: *doris.summey@aoa.hhs.gov*.

SUPPLEMENTARY INFORMATION: Under the PRA (44 U.S.C. 3501–3520), Federal agencies must obtain approval from the Office of Management and Budget (OMB) for each collection of information they conduct or sponsor. ''Collection of information'' is defined in 44 U.S.C. 3502(3) and 5 CFR 1320.3(c) and includes agency request or requirements that members of the public submit reports, keep records, or provide information to a third party. Section 3506(c)(2)(A) of the PRA (44 U.S.C. 3506(c)(2)(A)) requires Federal agencies to provide a 60-day notice in the **Federal Register** concerning each proposed collection of information, including each proposed extension of an existing collection of information, before submitting the collection to OMB for approval. To comply with this requirement, AoA is publishing notice of the proposed collection of information set forth in this document. With respect to the following collection of information, AoA invites comments on: (1) Whether the proposed collection of information is necessary for the proper performance of AoA's functions, including whether the information will have practical utility; (2) the accuracy of AoA's estimate of the burden of the proposed collection of information, including the validity of the methodology and assumptions used; (3) ways to enhance the quality, utility, and clarity of the information to be collected; and (4) ways to minimize the burden of the collection of information on respondents, including through the use of automated collection techniques when appropriate, and other forms of information technology.

Grantees are required by Congress to provide information for use in program monitoring and for Government Performance and Results Act (GPRA) purposes. This information collection reports the number of active volunteers, issues and inquiries received, other SMP program outreach activities, and the number of Medicare dollars recovered, among other SMP Performance outcomes.

AoA estimates the burden of this collection of information as follows: *Respondents:* 54 SMP grantees at 23 hours per month (276 hours per year, per grantee). *Total Estimated Burden Hours:* 14,904 hours per year.

Dated: April 8, 2009.

Edwin L. Walker,

Acting Assistant Secretary for Aging.

[FR Doc. E9–8386 Filed 4–10–09; 8:45 am]

BILLING CODE 4154–01–P

DEPARTMENT OF HEALTH AND HUMAN SERVICES

Centers for Disease Control and Prevention

[60Day–09–09BK]

Proposed Data Collections Submitted for Public Comment and Recommendations

In compliance with the requirement of Section 3506(c)(2)(A) of the Paperwork Reduction Act of 1995 for opportunity for public comment on proposed data collection projects, the Centers for Disease Control and Prevention (CDC) will publish periodic summaries of proposed projects. To request more information on the proposed projects or to obtain a copy of the data collection plans and instruments, call 404–639–5960 and send comments to Maryam I. Daneshvar, CDC Acting Reports Clearance Officer, 1600 Clifton Road, MS–D74, Atlanta, GA 30333 or send an e-mail to *omb@cdc.gov*.

Comments are invited on: (a) Whether the proposed collection of information is necessary for the proper performance of the functions of the agency, including whether the information shall have practical utility; (b) the accuracy of the agency's estimate of the burden of the proposed collection of information; (c) ways to enhance the quality, utility, and clarity of the information to be collected; and (d) ways to minimize the burden of the collection of information on respondents, including through the use of automated collection techniques or other forms of information technology. Written comments should be received within 60 days of this notice.

Proposed Project

Registration of Individuals Displaced by the Hurricanes Katrina and Rita (Pilot Project)—New—Agency for Toxic Substances and Disease Registry (ATSDR), Coordinating Center for Environmental Health and Injury Prevention (CCEHIP), Centers for Disease Control and Prevention (CDC).

Background and Brief Description

On August 29, 2005, Hurricane Katrina made landfall on the coast of the Gulf of Mexico near New Orleans, Louisiana, and became one of the most deadly and destructive storms in U.S. history. Also occurring in 2005, Hurricane Rita was the fourth-most intense Atlantic hurricane ever recorded and the most intense tropical cyclone ever observed in the Gulf of Mexico. Following the initial phase of the response, the Federal Emergency Management Agency (FEMA) assumed the primary role for housing displaced persons over the intermediate term. To support those needing temporary housing, FEMA provided over 143,000 travel trailers, park homes, and mobile homes for persons displaced by the above mentioned storms. However, some persons living in trailers complained of an odor or of eye or respiratory tract irritation.

FEMA entered into an Interagency Agreement with the Centers for Disease Control and Prevention (CDC)/ATSDR on August 16, 2007 to conduct a

comprehensive public health assessment, based on objective and credible research, of air quality conditions present in FEMA housing units to guide FEMA policy makers and inform the public as to the actual conditions in the field and any actions required to better promote a safe and healthful environment for the disaster victims FEMA housed in the units. FEMA's agreement with the CDC includes an initial formaldehyde exposure assessment as well as a subsequent long-term study of the health effects among resident children. Formaldehyde testing conducted and evaluated by the CDC pursuant to the initial exposure assessment has identified the need to evaluate the feasibility of establishing a national registry to identify and monitor the health of disaster victims who occupied FEMA-provided temporary housing units. The establishment of such a registry would complement the long-term health effects study set forth in the FEMA–CDC Interagency Agreement.

The purpose of this study is to assess the feasibility of contacting and enrolling members of the targeted group in a registry; to provide a basis for budgeting and further planning for a comprehensive registry; and to test the acceptance of and response to a questionnaire composed of standardized health questions related to systemic and respiratory symptoms.

A pre-registration dataset will be created before enrollment. This dataset will be populated with contact information of the study population, gathered from two main sources: FEMA datasets (in the case of occupants of temporary housing units) and data provided by self-identified individuals who were displaced by the hurricanes but did not live in the FEMA temporary trailers, members of a pre-defined population (in the case of occupants of non-temporary housing units).

A computer-assisted telephone interview (CATI) system based on a paper questionnaire will be used during all interviews to collect data for this project. The first part will consist of screening questions to determine eligibility for enrollment. The second part will contain contact information of the registrant and other household members, demographics, and health status questions, focusing on respiratory outcomes and cancer.

There are no costs to the respondents other than their time.

ESTIMATED ANNUALIZED BURDEN HOURS

Respondents	Form	Number of respondents	Number of responses per respondent	Average burden per response (in hours)	Total burden (in hours)
Temporary housing unit occupant	Screening questionnaire	8,000	1	3/60	400
	Main questionnaire	4,000	1	45/60	3,000
Non-Temporary housing unit occupant.	Screening questionnaire	2,000	1	3/60	100
	Main questionnaire	1,000	1	45/60	750
Total					4,250

Dated: April 7, 2009.

Maryam I. Daneshvar,

Acting Reports Clearance Officer, Centers for Disease Control and Prevention.

[FR Doc. E9–8340 Filed 4–10–09; 8:45 am]

BILLING CODE

DEPARTMENT OF HEALTH AND HUMAN SERVICES

Administration for Children and Families

Proposed Information Collection Activity; Comment Request

Title: National Survey of Child and Adolescent Well-Being Second Cohort (NSCAW II).

OMB No.: 0970–0202.

Description: The Department of Health and Human Services (HHS) intends to collect follow-up data on a sample of children and families for the National Survey of Child and Adolescent WellBeing (NSCAW). The NSCAW was authorized under Section 427 of the Personal Responsibility and Work Opportunities Reconciliation Act of 1996. The NSCAW is the only source of nationally representative, firsthand information about the functioning and well-being, service needs, and service utilization of children and families who come to the attention of the child welfare system. Information is collected about children's cognitive, social, emotional, behavioral, and adaptive functioning, as well as family and community factors that are likely to influence their functioning. Family service needs and service utilization also are addressed in the data collection.

Selection of the current NSCAW sample and baseline data collection began in 2007 with a final anticipated sample size of 5,700 children. The proposed data collection will allow for follow-up of this sample 18 months post-baseline, and will follow the same format as that used in the baseline round and will employ, with only modest revisions, the same instruments that were used in the previous round. Data from NSCAW are made available to the research community through licensing arrangements from the National Data Archive on Child Abuse and Neglect at Cornell University.

Respondents: Children and their associated permanent or foster caregivers, caseworkers, and teachers.

ANNUAL BURDEN ESTIMATES

Instrument	Number of respondents	Number of responses per respondent	Average burden hours per response	Total burden hours
Child Interview	1,520	1	1.33	2,022
Caregiver Interview	1,520	1	1.6	2,432
Caseworker Interview	355	1	1	355

ANNUAL BURDEN ESTIMATES—Continued

Instrument	Number of respondents	Number of responses per respondent	Average burden hours per response	Total burden hours
Teacher Questionnaire	907	1	.50	454

Estimated Total Annual Burden Hours: 5,263.

In compliance with the requirements of Section 3506(c)(2)(A) of the Paperwork Reduction Act of 1995, the Administration for Children and Families is soliciting public comment on the specific aspects of the information collection described above. Copies of the proposed collection of information can be obtained and comments may be forwarded by writing to the Administration for Children and Families, Office of Planning, Research and Evaluation, 370 L'Enfant Promenade, SW., Washington, DC 20447, Attn: OPRE Reports Clearance Officer. E-mail address: *OPREinfocollection@acf.hhs.gov*. All requests should be identified by the title of the information collection.

The Department specifically requests comments on (a) whether the proposed collection of information is necessary for the proper performance of the functions of the agency, including whether the information shall have practical utility; (b) the accuracy of the agency's estimate of the burden of the proposed collection of information; (c) the quality, utility, and clarity of the information to be collected; and (d) ways to minimize the burden of the collection of information on respondents, including through the use of automated collection techniques or other forms of information technology. Consideration will be given to comments and suggestions submitted within 60 days of this publication.

Dated: April 6, 2009.

Brendan C. Kelly,

Reports Clearance Officer.

[FR Doc. E9–8303 Filed 4–10–09; 8:45 am]

BILLING CODE 4184–01–M

DEPARTMENT OF HEALTH AND HUMAN SERVICES

National Institutes of Health

Center for Scientific Review; Notice of Closed Meeting

Pursuant to section 10(d) of the Federal Advisory Committee Act, as amended (5 U.S.C. App.), notice is hereby given of the following meeting.

The meeting will be closed to the public in accordance with the provisions set forth in sections 552b(c)(4) and 552b(c)(6), Title 5 U.S.C., as amended. The grant applications and the discussions could disclose confidential trade secrets or commercial property such as patentable material, and personal information concerning individuals associated with the grant applications, the disclosure of which would constitute a clearly unwarranted invasion of personal privacy.

Name of Committee: Center for Scientific Review Special Emphasis Panel; Topics in Developmental, Cellular and Molecular Biology.

Date: April 20, 2009.

Time: 2 p.m. to 4 p.m.

Agenda: To review and evaluate grant applications.

Place: National Institutes of Health, 6701 Rockledge Drive, Bethesda, MD 20892, (Telephone Conference Call).

Contact Person: Sherry L. Dupere, PhD, Scientific Review Officer, Center for Scientific Review, National Institutes of Health, 6701 Rockledge Drive, Room 5136, MSC 7843, Bethesda, MD 20892, (301) 435–1021, *duperes@csr.nih.gov*.

This notice is being published less than 15 days prior to the meeting due to the timing limitations imposed by the review and funding cycle.

(Catalogue of Federal Domestic Assistance Program Nos. 93.306, Comparative Medicine; 93.333, Clinical Research, 93.306, 93.333, 93.337, 93.393–93.396, 93.837–93.844, 93.846–93.878, 93.892, 93.893, National Institutes of Health, HHS)

Dated: April 6, 2009.

Anna Snouffer,

Deputy Director, Office of Federal Advisory Committee Policy.

[FR Doc. E9–8217 Filed 4–10–09; 8:45 am]

BILLING CODE 4140–01–M

DEPARTMENT OF HEALTH AND HUMAN SERVICES

Centers for Disease Control and Prevention

Board of Scientific Counselors, National Center for Health Statistics

In accordance with section 10(a)(2) of the Federal Advisory Committee Act (Pub. L. 92–463), the Centers for Disease Control and Prevention (CDC), National Center for Health Statistics (NCHS) announces the following meeting of the aforementioned committee.

Time and Date: 8:30 a.m.–5:30 p.m., May 7, 2009.

Place: NCHS Headquarters, 3311 Toledo Road, Hyattsville, Maryland 20782.

Status: Open to the public, and limited only to the space available. For foreign nationals or non-US citizens, pre-approval is required (please contact Althelia Harris, 301–458–4261, *adw1@cdc.gov* or Virginia Cain, *vcain@cdc.gov* at least 10 days in advance for requirements). All visitors are required to present a valid form of picture identification issued by a state, federal or international government. As required by the Federal Property Management Regulations, Title 41, Code of Federal Regulation, Subpart 101–20.301, all persons entering in or on Federal controlled property and their packages, briefcases, and other containers in their immediate possession are subject to being x-rayed and inspected. Federal law prohibits the knowing possession or the causing to be present of firearms, explosives and other dangerous weapons and illegal substances. The meeting room accommodates approximately 100 people.

Purpose: This committee is charged with providing advice and making recommendations to the Secretary, Department of Health and Human Services; the Director, CDC; and the Director, NCHS, regarding the scientific and technical program goals and objectives, strategies, and priorities of NCHS.

Matters To Be Discussed: The agenda will include welcome remarks by the Director, NCHS; introduction of members and key NCHS staff; review of the long-term care statistics program; discussion of upcoming program reviews; discussion of a potential integrated interview and examination survey and an open session for comments from the public.

Requests to make oral presentations should be submitted in writing to the contact person listed below. All requests must contain the name, address, telephone number, and organizational affiliation of the presenter.

Written comments should not exceed five single-spaced typed pages in length and must be received by April 17, 2009.

The agenda items are subject to change as priorities dictate.

For Further Information Contact: Virginia S. Cain, PhD, Director of Extramural Research, NCHS/CDC, 3311 Toledo Road, Room 7211, Hyattsville, Maryland 20782, telephone (301) 458–4500, fax (301) 458–4020.

The Director, Management Analysis and Services Office, has been delegated the authority to sign **Federal Register** notices pertaining to announcements of meetings and other committee management activities for

both CDC and the Agency for Toxic Substances and Disease Registry.

Dated: April 7, 2009.

Elaine L. Baker,

Management Analysis and Services Office, Centers for Disease Control and Prevention.

[FR Doc. E9–8330 Filed 4–10–09; 8:45 am]

BILLING CODE 4163–18–P

DEPARTMENT OF HEALTH AND HUMAN SERVICES

Centers for Disease Control and Prevention

Disease, Disability, and Injury Prevention and Control Special Emphasis Panel (SEP): CDC Grants for Public Health Research Dissertation, Panel C, Funding Opportunity Announcement (FOA) PAR07–231

In accordance with Section 10(a)(2) of the Federal Advisory Committee Act (Pub. L. 92–463), the Centers for Disease Control and Prevention (CDC) announces the aforementioned meeting.

Time and Date:

9 a.m.–5 p.m., April 28, 2009 (Closed).

9 a.m.–5 p.m., April 29, 2009 (Closed).

Place: W Hotel, 188 14th Street, NE., Atlanta, Georgia 30361, Telephone: (404) 892–6000.

Status: The meeting will be closed to the public in accordance with provisions set forth in Section 552b(c) (4) and (6), Title 5 U.S.C., and the Determination of the Director, Management Analysis and Services Office, CDC, pursuant to Public Law 92–463.

Matters To Be Discussed: The meeting will include the review, discussion, and evaluation of applications received in response to ''CDC Grants for Public Health Research Dissertation, Panel C, FOA PAR07–231.''

Contact Person for More Information: Christine J. Morrison, PhD, Scientific Review Officer, Office of the Director, Office of the Chief Science Officer, CDC, 1600 Clifton Road, NE., Mailstop D72, Atlanta, GA 30333, Telephone: (404) 639–3098.

The Director, Management Analysis and Services Office, has been delegated the authority to sign **Federal Register** notices pertaining to announcements of meetings and other committee management activities, for both CDC and the Agency for Toxic Substances and Disease Registry.

Dated: April 7, 2009.

Elaine L. Baker,

Director, Management Analysis and Services Office, Centers for Disease Control and Prevention.

[FR Doc. E9–8333 Filed 4–10–09; 8:45 am]

BILLING CODE 4163–18–P

DEPARTMENT OF HEALTH AND HUMAN SERVICES

Centers for Disease Control and Prevention

Board of Scientific Counselors, Coordinating Center for Infectious Diseases (CCID)

In accordance with section 10(a)(2) of the Federal Advisory Committee Act (Pub. L. 92–463), the Centers for Disease Control and Prevention (CDC) announces the following meeting of the aforementioned committee:

Times and Dates:

9 a.m.–5 p.m., May 14, 2009.

8:30 a.m.–3:30 p.m., May 15, 2009.

Place: CDC Global Communication Center, Building 19, 1600 Clifton Road, NE., Atlanta, Georgia 30333.

May 14, 2009—Building 19; Working Groups will meet as follows:

Rooms 245/246—The National Center for HIV/AIDS, Viral Hepatitis, STD, and TB Prevention (NCHHSTP).

Rooms 247/248—National Center for Zoonotic, Vector-Borne, and Enteric Diseases (NCZVED).

Rooms 254/255—National Center for Immunization and Respiratory Diseases (NCIRD).

Rooms 256/257—National Center for Preparedness, Detection, and Control of Infectious Diseases (NCPDCID).

May 15, 2009—Full Board meets in Auditorium B3.

Status: Open to the public, limited only by the space available.

Purpose: The Board of Scientific Counselors, CCID, provides advice and guidance to the Director, CDC, and Director, CCID, in the following areas: program goals and objectives; strategies; program organization and resources for infectious disease prevention and control; and program priorities.

Matters to be Discussed: Agenda items will include:

1. Breakout Group Discussions: Environmental Microbiology—morning session (NCPDCID and NCZVED).
2. Strategic Plan (NCPDCIC)—afternoon session.
3. Strategic Blueprint (NCZVED)—afternoon session.
4. Strategic Plan (NCHHSTP).
5. Prevention of Neonatal Group B Streptococcal Disease Influenza at the Human-Animal Interface; Review of Recommendations from April 2009 Meeting—(NCIRD).
6. Strategies for Infectious Diseases; Positioning for the Future (Full Board).
7. Budget and CCID/OD Updates.

Other agenda items include announcements/introductions; follow-up on actions recommended by the Board and consideration of future directions, goals, and recommendations.

Agenda items are subject to change as priorities dictate.

Written comments are welcome and should be received by the contact person listed below prior to the opening of the meeting.

Contact Person for More Information: Harriette Lynch, Office of the Director, CCID, CDC, Mailstop E–77, 1600 Clifton Road, N.E., Atlanta, Georgia 30333, e-mail: *hlynch@cdc.gov*; telephone (404) 498–2726.

The Director, Management Analysis and Services office has been delegated the authority to sign **Federal Register** notices pertaining to announcements of meetings and other committee management activities, for both the Centers for Disease Control and Prevention and the Agency for Toxic Substances and Disease Registry.

Dated: April 6, 2009.

Elaine L. Baker,

Director, Management Analysis and Services Office, Centers for Disease Control and Prevention.

[FR Doc. E9–8342 Filed 4–10–09; 8:45 am]

BILLING CODE 4163–18–P

DEPARTMENT OF HEALTH AND HUMAN SERVICES

Centers for Disease Control and Prevention

Advisory Committee to the Director, Centers for Disease Control (ACD, CDC)

In accordance with section 10(a)(2) of the Federal Advisory Committee Act (Pub. L. 92–463), CDC announces the following meeting of the aforementioned committee:

Time and Date: 8 a.m.–3:30 p.m., April 30, 2009.

Place: Centers for Disease Control and Prevention, Tom Harkin Global Communications Center, Kent ''Oz'' Nelson Auditorium, 1600 Clifton Road, NE., Atlanta, Georgia 30333.

Status: Open to the public, limited only by the space available. The meeting room accommodates approximately 150 people.

Purpose: The committee will provide advice to the Director, CDC on strategic and other broad issues facing CDC.

Matters To Be Discussed: The committee will discuss the final report on the recommendations from the National Biosurveillance Advisory Subcommittee; discuss the mission of the Health Disparities Subcommittee; discuss the recommendations from the Ethics Subcommittee on the ''*Ethical Aspects of Compulsory Use of Travel Restriction Tools*'', and the subcommittee's input on the ''*Role of Social Determinants Health in Health Reform*''; and will discuss CDC's Organizational Review.

Agenda items are subject to change as priorities dictate.

For Further Information Contact: Brad Perkins, M.D., M.B.A., ACD, CDC, 1600 Clifton Road, NE., M/S D–14, Atlanta, Georgia 30333. Telephone 404–639–7000.

The Director, Management Analysis and Services office has been delegated the authority to sign **Federal Register** notices

pertaining to announcements of meetings and other committee management activities for both the Centers for Disease Control and Prevention and the Agency for Toxic Substances and Disease Registry.

Dated: April 7, 2009.

Elaine L. Baker,

Director, Management Analysis and Services Office, Centers for Disease Control and Prevention.

[FR Doc. E9–8343 Filed 4–10–09; 8:45 am]

BILLING CODE 4163–18–P

DEPARTMENT OF HEALTH AND HUMAN SERVICES

Centers for Disease Control and Prevention

Subcommittee on Procedures Reviews, Advisory Board on Radiation and Worker Health (ABRWH), National Institute for Occupational Safety and Health (NIOSH)

In accordance with section 10(a)(2) of the Federal Advisory Committee Act (Pub. L. 92–463), the Centers for Disease Control and Prevention (CDC) announces the following meeting for the aforementioned subcommittee:

Time and Date: 9:30 a.m.–5 p.m., May 1, 2009.

Place: Cincinnati Airport Marriott, 2395 Progress Drive, Hebron, Kentucky 41018, Telephone: (859) 334–4611, Fax: (859) 334–4619.

Status: Open to the public, but without a public oral comment period. To access by conference call dial the following information 1 (866) 659–0537, Participant Pass Code 9933701.

Background: The Advisory Board was established under the Energy Employees Occupational Illness Compensation Program Act of 2000 to advise the President on a variety of policy and technical functions required to implement and effectively manage the new compensation program. Key functions of the Advisory Board include providing advice on the development of probability of causation guidelines that have been promulgated by the Department of Health and Human Services (HHS) as a final rule; advice on methods of dose reconstruction which have also been promulgated by HHS as a final rule; advice on the scientific validity and quality of dose estimation and reconstruction efforts being performed for purposes of the compensation program; and advice on petitions to add classes of workers to the Special Exposure Cohort (SEC).

In December 2000, the President delegated responsibility for funding, staffing, and operating the Advisory Board to HHS, which subsequently delegated this authority to CDC. NIOSH implements this responsibility for CDC. The charter was issued on August 3, 2001, renewed at appropriate intervals, and will expire on August 3, 2009.

Purpose: The Advisory Board is charged with (a) Providing advice to the Secretary, HHS, on the development of guidelines under Executive Order 13179; (b) providing advice to the Secretary, HHS, on the scientific validity and quality of dose reconstruction efforts performed for this program; and (c) upon request by the Secretary, HHS, advise the Secretary on whether there is a class of employees at any Department of Energy facility who were exposed to radiation but for whom it is not feasible to estimate their radiation dose, and whether there is reasonable likelihood that such radiation doses may have endangered the health of members of this class. The Subcommittee on Procedures Reviews was established to aid the Advisory Board in carrying out its duty to advise the Secretary, HHS, on dose reconstruction. It will be responsible for overseeing, tracking, and participating in the reviews of all procedures used in the dose reconstruction process by the NIOSH Office of Compensation Analysis and Support (OCAS) and its dose reconstruction contractor.

Matters to be Discussed: The agenda for the Subcommittee meeting includes: a discussion of proposed new versions of the computer-assisted telephone interview scripts and procedures NIOSH uses to interview claimants at the outset of the dose reconstruction process; a discussion of ORAUT–OTIB–0054 (''Fission and Activation Product Assignment for Internal Dose-Related Gross Beta and Gross Gamma Analyses''), ORAUT–OTIB–0052 (''Parameters for Processing Claims for Construction Workers''); ORAU–OTIB–0029 (Internal Dosimetry Coworker Data for Y–12); and, a continuation of the comment-resolution process for other dose reconstruction procedures under review by the Subcommittee.

The agenda is subject to change as priorities dictate.

This meeting is open to the public, but without a public oral comment period. In the event an individual wishes to provide comments, written comments may be submitted. Any written comments received will be provided at the meeting and should be submitted to the contact person below in advance of the meeting.

Contact Person for More Information: Theodore Katz, Executive Secretary, NIOSH, CDC, 1600 Clifton Road, N.E., Mailstop E–20, Atlanta, Georgia 30333, Telephone: (513) 533–6800, Toll Free 1 (800) CDC–INFO, e-mail *ocas@cdc.gov*.

The Director, Management Analysis and Services Office, has been delegated the authority to sign **Federal Register** notices pertaining to announcements of meetings and other committee management activities, for both CDC and the Agency for Toxic Substances and Disease Registry.

Dated: April 3, 2009.

Elaine L. Baker,

Director, Management Analysis and Services Office, Centers for Disease Control and Prevention.

[FR Doc. E9–8335 Filed 4–10–09; 8:45 am]

BILLING CODE 4163–19–P

DEPARTMENT OF HEALTH AND HUMAN SERVICES

Centers for Disease Control and Prevention

National Center for Injury Prevention and Control, Initial Review Group, (NCIPC, IRG)

Correction: This notice was published in the **Federal Register** on March 30, 2009, Volume 74, Number 59, Page 14134. The times and place for the aforementioned meeting have been changed to the following:

Times and Dates:

10 a.m.–10:30 a.m., April 22, 2009 (Open).

10:30 a.m.–5 p.m., April 22, 2009 (Closed).

Place: Teleconference, toll free: (888)793–2154, Participant Passcode: 4424802.

Contact Person for More Information: Jane Suen, Dr. P.H., M.S., NCIPC, CDC, 4770 Buford Highway, NE., Mailstop F–62, Atlanta, Georgia 30341, Telephone: (770) 488–4281.

The Director, Management Analysis and Services Office, has been delegated the authority to sign **Federal Register** notices pertaining to announcements of meetings and other committee management activities, for both CDC and the Agency for Toxic Substances and Disease Registry.

Dated: April 3, 2009.

Elaine L. Baker,

Director, Management Analysis and Services Office, Centers for Disease Control and Prevention.

[FR Doc. E9–8331 Filed 4–10–09; 8:45 am]

BILLING CODE 4163–18–P

DEPARTMENT OF HEALTH AND HUMAN SERVICES

National Institutes of Health

Center for Scientific Review; Notice of Closed Meetings

Pursuant to section 10(d) of the Federal Advisory Committee Act, as amended (5 U.S.C. App.), notice is hereby given of the following meetings.

The meetings will be closed to the public in accordance with the provisions set forth in sections 552b(c)(4) and 552b(c)(6), Title 5 U.S.C., as amended. The grant applications and the discussions could disclose confidential trade secrets or commercial property such as patentable material, and personal information concerning individuals associated with the grant applications, the disclosure of which would constitute a clearly unwarranted invasion of personal privacy.

Name of Committee: Center for Scientific Review Special Emphasis Panel Member Conflict.

Date: May 5, 2009.

Time: 11 a.m. to 2 p.m.
Agenda: To review and evaluate grant applications.
Place: National Institutes of Health, 6701 Rockledge Drive, Bethesda, MD 20892, (Virtual Meeting)
Contact Person: Rass M. Shayiq, PhD, Scientific Review Officer, Center for Scientific Review, National Institutes of Health, 6701 Rockledge Drive, Room 2182, MSC 7818, Bethesda, MD 20892, (301) 435–2359, *shayiqr@csr.nih.gov*.

Name of Committee: Center for Scientific Review Special Emphasis Panel; Member Conflict Applications: PBKD and UKGD.
Date: May 13, 2009.
Time: 2 p.m. to 7 p.m.
Agenda: To review and evaluate grant applications.
Place: National Institutes of Health, 6701 Rockledge Drive, Bethesda, MD 20892, (Virtual Meeting)
Contact Person: Najma Begum, PhD, Scientific Review Officer, Center for Scientific Review, National Institutes of Health, 6701 Rockledge Drive, Room 2186, MSC 7818, Bethesda, MD 20892, 301–435–1243, *begumn@csr.nih.gov*.

Name of Committee: Oncology 2—Translational Clinical Integrated Review Group; Clinical Oncology Study Section.
Date: May 18–19, 2009.
Time: 8 a.m. to 5 p.m.
Agenda: To review and evaluate grant applications.
Place: Bahia Resort Hotel, 998 W. Mission Bay Drive, San Diego, CA 92109.
Contact Person: Malaya Chatterjee, PhD, Scientific Review Officer, Center for Scientific Review, National Institutes of Health, 6701 Rockledge Drive, Room 6192, MSC 7804, Bethesda, MD 20892, 301–451–0131, *chatterm@csr.nih.gov*.

Name of Committee: Surgical Sciences, Biomedical Imaging and Bioengineering Integrated Review Group; Bioengineering, Technology and Surgical Sciences Study Section.
Date: May 18–19, 2009.
Time: 8 a.m. to 5 p.m.
Agenda: To review and evaluate grant applications.
Place: Hilton Washington DC/Rockville, Hotel and Executive Meeting Center, 1750 Rockville Pike, Rockville, MD 20852.
Contact Person: Khalid Masood, PhD, Scientific Review Officer, Center for Scientific Review, National Institutes of Health, 6701 Rockledge Drive, Room 5120, MSC 7854, Bethesda, MD 20892, 301–435–2392, *masoodk@csr.nih.gov*.

Name of Committee: Endocrinology, Metabolism, Nutrition and Reproductive Sciences Integrated Review Group; Integrative Physiology of Obesity and Diabetes Study Section.
Date: May 28–29, 2009.
Time: 8 a.m. to 6 p.m.
Agenda: To review and evaluate grant applications.
Place: One Washington Circle Hotel, One Washington Circle, Washington, DC 20037.
Contact Person: Reed A. Graves, PhD, Scientific Review Officer, Center for Scientific Review, National Institutes of Health, 6701 Rockledge Drive, Room 6166, MSC 7892, Bethesda, MD 20892, (301) 402–6297, *gravesr@csr.nih.gov*.

Name of Committee: Integrative, Functional and Cognitive Neuroscience Integrated Review Group; Cognitive Neuroscience Study Section.
Date: May 28, 2009.
Time: 8 a.m. to 5 p.m.
Agenda: To review and evaluate grant applications.
Place: Churchill Hotel, 1914 Connecticut Avenue, NW., Washington, DC 20009.
Contact Person: Judith A. Finkelstein, PhD, Scientific Review Officer, Center for Scientific Review, National Institutes of Health, 6701 Rockledge Drive, Room 5178, MSC 7844, Bethesda, MD 20892, 301–435–1249, *finkelsj@csr.nih.gov*.

(Catalogue of Federal Domestic Assistance Program Nos. 93.306, Comparative Medicine; 93.333, Clinical Research; 93.306, 93.333, 93.337, 93.393–93.396, 93.837–93.844, 93.846–93.878, 93.892, 93.893, National Institutes of Health, HHS)

Dated: April 6, 2009.

Anna Snouffer,

Deputy Director, Office of Federal Advisory Committee Policy.

[FR Doc. E9–8218 Filed 4–10–09; 8:45 am]

BILLING CODE 4140–01–M

DEPARTMENT OF HOMELAND SECURITY

Transportation Security Administration

Intent To Request Approval From OMB of One New Public Collection of Information: Certified Cargo Screening Pilot Program

AGENCY: Transportation Security Administration, DHS.

ACTION: 60-day notice.

SUMMARY: The Transportation Security Administration (TSA) invites public comment on a new Information Collection Request (ICR) abstracted below that we will submit to the Office of Management and Budget (OMB) for approval in compliance with the Paperwork Reduction Act. The ICR describes the nature of the information collection and its expected burden. The collection will allow TSA to collect two broad categories of information from entities that wish to become Certified Cargo Screening Facilities (CCSF): (1) Personal information to allow TSA to conduct security threat assessments on key individuals employed by the CCSFs; and (2) data demonstrating air cargo throughput and other information from which TSA can determine the effectiveness of the CCSF's performance. Under this pilot, CCSFs must also maintain screening and other security-related training records.

DATES: Send your comments by June 12, 2009.

ADDRESSES: Comments may be mailed or delivered to Ginger LeMay, Office of Information Technology, TSA–11, Transportation Security Administration, 601 South 12th Street, Arlington, VA 20598–6011.

FOR FURTHER INFORMATION CONTACT: Ginger LeMay at the above address, or by telephone (571) 227–3616 or e-mail *ginger.lemay@dhs.gov*.

SUPPLEMENTARY INFORMATION:

Comments Invited

In accordance with the Paperwork Reduction Act of 1995 (44 U.S.C. 3501 *et seq.)*, an agency may not conduct or sponsor, and a person is not required to respond to, a collection of information unless it displays a valid OMB control number. The ICR documentation is available at *http://www.reginfo.gov*. Therefore, in preparation for OMB review and approval of the following information collection, TSA is soliciting comments to—

(1) Evaluate whether the proposed information requirement is necessary for the proper performance of the functions of the agency, including whether the information will have practical utility;

(2) Evaluate the accuracy of the agency's estimate of the burden;

(3) Enhance the quality, utility, and clarity of the information to be collected; and

(4) Minimize the burden of the collection of information on those who are to respond, including using appropriate automated, electronic, mechanical, or other technological collection techniques or other forms of information technology.

Information Collection Requirement

Purpose and Description of Data Collection

TSA is seeking approval of this ICR in order to secure passenger aircraft carrying cargo by the deadlines set out in the Implementing Recommendations of the 9/11 Commission Act of 2007.

Section 1602 of the Implementing Recommendations of the 9/11 Commission Act of 2007 (Pub. L. 110–53, 121 Stat. 266, 278, Aug. 3, 2007) requires the development of a system to screen 50 percent of the cargo transported on a passenger aircraft by February 2009 and to screen 100 percent of such cargo by August 2010. TSA plans to issue an interim final rule (IFR) amending 49 CFR to implement this statutory requirement. In order to comply with the statutory mandate, TSA has developed a program that will allow shippers, indirect air carriers, and

other entities to screen cargo off-airport before it is tendered to aircraft operators for transport on passenger aircraft. In the absence of such a program, all air cargo screening required by the 9/11 Commission Act would have to be accomplished by the aircraft operators at the airport. Severe delays and economic disruption would result.

Before issuing the IFR, however, TSA needs to collect information during an initial pilot program. Accordingly, TSA must proceed with a separate ICR for the pilot program in order to meet the Congressional mandate. This ICR will allow TSA to collect two broad categories of information from shippers, indirect air carriers, and other entities that wish to become CCSFs:

(1) Personal information to allow TSA to conduct security threat assessments (STA) on key individuals employed by the CCSFs; and

(2) Data demonstrating air cargo throughput and other information from which TSA can determine eligibility to become a CCSF and the effectiveness of the CCSF's performance.

TSA will certify qualified facilities as CCSFs. CCSFs may screen cargo off-airport and must implement measures to ensure a secure chain of custody from the point of screening to the point at which the cargo is tendered to the aircraft operator or other regulated entity for transport. This pilot creates several new information collections. Outlined below are the specifics of each information collection.

Data Collection

Entities seeking to become CCSFs are required to submit an application to TSA at least 90 days before the intended date of operation. CCSF applicants will submit applications and related information either electronically through e-mail or through the online Air Cargo Document Management System under development. TSA will also accept applications by postal mail. Once TSA approves the application, TSA will allow the regulated entity to operate as a CCSF in accordance with TSA standards.

TSA will require CCSF applicants to ensure that individuals performing screening and related functions under the IFR have successfully completed an STA conducted by TSA. In addition, Security Coordinators and their alternates for CCSFs will need STAs. CCSFs must submit personally identifiable information on these individuals to TSA so that TSA can conduct an STA.

CCSF facilities must provide information on the amount of cargo screened at an approved facility. CCSFs must also maintain screening and other security-related training records.

Estimated Burden Hours

TSA has identified four separate information collections under this ICR. These four collections will affect an estimated total of 2,667 unique respondents (shippers, indirect air carriers, and other entities) over the three years of the PRA analysis. Collectively, these four information collections represent an estimated average of 89,011 responses annually, for an average annual hour burden of 152,490 hours.

1. *STAs.* All pilot participants will be required to have certain employees undergo STAs. TSA estimates the time to complete an STA application at 15 minutes per individual. TSA estimates an average of 2,667 CCSFs responding annually with an average of 20 applicants each. This yields an estimated 53,340 STAs (2,667 CCSFs × 20 applicants) for CCSFs. From this, we derive an annual hour burden of 13,335 hours (53,340 STAs × 0.25 hrs).

2. *Screening and Other Security-Related Training Records.* All CCSFs will be required to maintain screening and other security-related training records for employees in the program. TSA estimates a time burden of approximately five minutes annually for each CCSF to file the training records. TSA considers the estimated average annual CCSFs impacted to be 2,667. From this, TSA derives an annual hour burden of approximately 221 hours (2,667 CCSFs × 0.083 hrs).

3. *Applications.* Entities desiring to become CCSFs will send TSA an application for consideration. TSA estimates that it will receive an average of 1,000 enrollment applications annually, and that these applications will require an average of 15 minutes each to complete, resulting in an annual burden of 250 hours (1,000 CCSFs × 0.25 hrs).

4. *Cargo Volume Reports.* Finally, TSA estimates that approximately 2,667 CCSFs will complete monthly cargo volume reports taking approximately one hour each week. This creates an estimated annual burden of approximately 138,684 hours (2,667 CCSFs × 1 hr × 52 weeks).

Use of Results

TSA will use the information gathered as part of this pilot program for the purpose of ''beta testing'' the many processes and procedures associated with the program. TSA will utilize the results to evaluate, refine, and improve the final certified cargo screening program in the IFR.

Issued in Arlington, Virginia, on April 7, 2009.

Ginger LeMay,

Paperwork Reduction Act Officer, Business Improvements and Communications, Office of Information Technology.

[FR Doc. E9–8350 Filed 4–10–09; 8:45 am]

BILLING CODE 9110–05–P

DEPARTMENT OF HOMELAND SECURITY

Transportation Security Administration

[Docket No. TSA–2004–19147]

RIN 1652–ZA16

Alien Flight Student Program Recurrent Training Fees

AGENCY: Transportation Security Administration, DHS.

ACTION: Notice.

SUMMARY: The Transportation Security Administration (TSA) announces the imposition of fees for processing alien flight students who take recurrent training. These fees will cover the cost of the security threat assessments of these alien flight students. Recent statutory amendments authorize TSA to establish these fees by notice.

DATES: This notice is effective 30 days from the date of publication in the **Federal Register**.

ADDRESSES: You may view published documents and comments concerning the Alien Flight Student Program, identified by the docket number of this notice, using any one of the following methods:

(1) Searching the Federal Docket Management System (FDMS) Web page at *http://www.regulations.gov*;

(2) Accessing the Government Printing Office's Web page at *http://www.gpoaccess.gov/fr/index.html*; or

(3) Visiting TSA's Security Regulations Web page at *http://www.tsa.gov* and accessing the link for ''Research Center'' at the top of the page.

FOR FURTHER INFORMATION CONTACT: Johannes M. Knudsen, Alien Flight Student Program, Transportation Threat Assessment and Credentialing (TTAC), TSA–19, Transportation Security Administration, 601 South 12th Street, Arlington, VA 20598–6019. Telephone: (571) 227–2188; e-mail: *Johannes.Knudsen@dhs.gov*.

SUPPLEMENTARY INFORMATION:

I. Statutory Authority

The Consolidated Security, Disaster Assistance, and Continuing Appropriations Act, 2009

(Appropriations Act of 2009),[1] which amends 6 U.S.C. 469, requires the Secretary of the Department of Homeland Security to (1) establish a process to determine that an alien who takes recurrent flight training is properly identified and does not pose a threat to aviation or national security; and (2) impose reasonable fees to recoup the cost of checking recurrent training candidates.

TSA refers to recurrent training as Category 4 training. TSA defines recurrent training as periodic training required for certified pilots under 14 CFR parts 61, 121, 125, 135, or subpart K of part 91. Recurrent training does not include training that would enable a candidate who has a certificate or type rating for a particular aircraft to receive a certificate or type rating for another aircraft. *See* 49 CFR 1552.1. Further, TSA has clarified that recurrent training includes training required by a foreign national authority that is recognized by the Federal Aviation Administration (FAA). *See* TSA Interpretation at Docket No. TSA–2004–19147–227. Finally, TSA has clarified that recurrent training does not include flight review, proficiency check, or any other check whose purpose is to review rules, maneuvers, or procedures, or to demonstrate a pilot's existing skills on aircraft with a maximum certificated take-off weight of 12,500 pounds or less, such as flight review required under 14 CFR 61.56 or flight experience requirements in 14 CFR 61.57. *See* TSA Interpretation at Docket No. TSA–2004–19147–0226.

The Appropriations Act of 2009 provides:

> [T]he Secretary shall establish a process to ensure that an alien (as defined in section 101(a)(3) of the Immigration and Nationality Act) applying for recurrent training in the operation of any aircraft is properly identified and has not, since the time of any prior threat assessment conducted pursuant to section 44939(a) of such title, become a risk to aviation or national security.
>
> The Secretary may charge reasonable fees under subsection (a) for providing credentialing and background investigations for aliens in connection with the process for recurrent training. * * * Such fees shall be promulgated by notice in the Federal Register.

Public Law No. 110–329, 543(2)(b)(1), (3) (6 U.S.C. 469(b)(1), (3)).

[1] Public Law No. 110–329, 543, 122 Stat. 3574, 3689 (September 30, 2008).

II. Recurrent Training Under the Alien Flight Student Program

A. Overview of Alien Flight Student Program

TSA administers the Alien Flight Student Program (AFSP) and conducts security threat assessments of alien flight candidates to determine that they do not pose a threat to aviation or national security. TSA has codified the standards that govern this program at 49 CFR part 1552 [2] and establish which alien flight candidates must undergo a security threat assessment, the information they must provide to TSA for the security threat assessment, and the fees the candidates must pay to cover the cost of the security threat assessment.

Aliens seeking flight instruction fall into one of four categories of flight instruction, and aliens who take recurrent training fall under Category 4.[3] Part 1552, and the statutes authorizing the rule, require fees for candidates seeking flight training under Categories 1–3, and the Appropriations Act of 2009 authorizes TSA to establish fees for candidates seeking Category 4 recurrent training. In accordance with the Appropriations Act of 2009, TSA, through this notice, addresses recurrent flight training (Category 4) procedures and associated fees.

B. Security Threat Assessment Process

To conduct a security threat assessment on alien flight candidates, TSA needs certain biographic information to check the individual against terrorism-related databases and other governmental information sources, and verify identity. Section 1552.3(d) currently requires the following information from candidates for recurrent training requests: (1) Full name (and any other names used previously); (2) any unique student identification number issued previously to the candidate by the Department of Justice or TSA (such as for other flight training); (3) a copy of the candidate's current, unexpired passport and visa, if any; (4) the candidate's current airman certificate, issuing country, certificate number, and type rating(s); (5) the type of training for which the candidate is applying; (6) the date of the candidate's prior recurrent training (if any), and a copy of the training form documenting that recurrent training; (7) the dates and location of the candidate's requested training; and (8) a photograph of the candidate taken when the candidate arrives at the flight school for recurrent training.

In addition to the information listed above, TSA will now request information gleaned from the candidate's passport, a copy of which is required under 49 CFR 1552.3(d)(2)(iii), including the candidate's date of birth, gender, birth country, nationality, height, weight, eye color, hair color, country of citizenship, type of citizenship (current, dual, or historical), whether citizenship is acquired through birth or naturalization, dates of citizenship, and passport information (issue and expiration date, status, city of issuance). Additionally, TSA will require contact information to facilitate communication between TSA and the candidate, such as address, dates at the address, phone number(s), and e-mail address; and employment information, such as occupation, employer's name, phone number, and e-mail address. A candidate may also voluntarily indicate whether his or her passport was issued outside the United States and whether it has been renewed. Note that TSA currently requires candidates who are seeking flight training under Categories 1–3 to submit this data. TSA has found that this contact information greatly reduces that amount of time it takes to complete a security threat assessment, which benefits the candidates and TSA. We require this information from individuals who work in the maritime industry, drivers who are applying for a hazardous materials endorsement, and air cargo employees. *See* 49 CFR parts 1548, 1572.

On January 5, 2005, TSA issued an exemption that reduced the amount of information that must be submitted for candidates seeking recurrent training to the following: (1) Full name and any others used previously; (2) date of birth; (3) passport number and issuing country; (4) airman certificate number, the type of airman's certificate, type ratings on the certificate, and issuing country of the certificate; and (5) the type and dates of training the candidate requests. *See* Docket No. TSA–2004–19147–0337. At that time, TSA noted that the exemption would remain in effect until superseded. TSA now rescinds this exemption because the

[2] TSA published part 1552 pursuant to section 113 of the Aviation and Transportation Security Act (ATSA) and section 612 of Vision 100—Century of Aviation Reauthorization Act (49 U.S.C. 44939).

[3] The other three categories are: (1) Category 1—flight training candidates seeking training in the operation of aircraft weighing greater than 12,500 pounds; (2) Category 2—flight training candidates seeking training in the operation of aircraft weighing greater than 12,500 pounds, but who qualify for expedited processing because of certain qualifications; and (3) Category 3—flight training candidates seeking training in the operation of aircraft weighing 12,500 pounds or less and the training is an initial, multi-engine, or instrument-rating training. This notice does not affect Categories 1–3 procedures.

information required under the rule (49 CFR 1552.3(d)) and this notice is necessary to conduct threat assessments on Category 4 candidates.

Flight schools must submit all of the information required in section 1552.3(d) and this notice to TSA through the AFSP system. TSA will describe this process in greater detail on the AFSP Web site, including how candidates obtain a User ID.

III. Fees

A. Standards and Guidelines Used by TSA in Developing These Fees

The total fee will be $70 for each Category 4 recurrent training request. TSA calculated the fee from a detailed analysis of historical data on the actual number of Category 4 recurrent training candidates (population), the actual cost of processing the Category 4 submissions, the actual cost of performing the candidate assessments, and the actual cost of maintaining the information systems to support the process over the past four years.

B. Costs

Candidates for recurrent training must pay a fee, through their respective flight training provider, to cover the following costs:

TABLE 1—AFSP CATEGORY 4 ACTUAL COSTS

Operational year	FY2005	FY2006	FY2007	FY2008	Total
Cost Components:					
Threat Analysis	$20,770	$22,150	$23,917	$23,524	$90,361
Enrollments	1,063,100	746,969	1,014,875	818,778	3,643,722
Program Management	243,940	402,850	525,634	353,148	1,525,572
Hardware/Software	264,806	110,392	119,408	95,301	589,907
Program Administration	48,579	42,194	40,969	38,138	169,880
Grand Totals	1,641,195	1,324,555	1,724,803	1,328,889	6,019,442

For the TSA security threat assessment, each Category 4 candidate's information will be checked against multiple databases and other information sources so that TSA can determine whether the candidate poses a security threat that warrants denial of approval of the training request. TSA must establish and maintain the appropriate systems, resources, and personnel to ensure that the candidate's information is appropriately linked, and that TSA will be able to receive and act on the results of the security threat assessment. TSA must have the necessary resources—including labor, equipment, database access, and overhead—to adjudicate the results of the security threat assessment and complete the security threat assessment process.

An analysis of historical costs necessary to conduct candidate assessments for this category of applicants indicates that $6,019,442 has been expended by TSA in fiscal years 2005–2008. The historical costs include $90,361 for threat analysis, $3,643,722 for enrollment, $1,525,572 for program management, $589,907 for hardware and software, and $169,880 for program administration costs necessary to facilitate the processing.

C. Population

An analysis of historical data on Category 4 candidates in fiscal years 2005–2008 indicates that 85,638 training requests have been processed under this category. The analysis indicates the following training requests for each fiscal year.

TABLE 2: AFSP CATEGORY 4 ACTUAL POPULATION

Operational year	FY2005	FY2006	FY2007	FY2008	Total
Annual Candidates for Category 4 recurrent training	16,417	17,248	29,373	22,600	85,638
Grand Total	16,417	17,248	29,373	22,600	85,638

D. Total Fee

The fee TSA charges will recover all costs related to the security threat assessment process. TSA has determined that the fee required to fully recover the candidate assessment costs will be $70 per candidate. The $70 fee was determined by dividing the actual number of historical training requests (85,638) into the actual historical cost ($6,019,442) of services for this category.

TSA will continue work to minimize program costs. Additionally, in accordance with statutory financial management requirements, TSA is required to review fees no less than every two years. *See* 31 U.S.C. 902(a)(8). Upon review, if it is found that the fees are either too high (total fees exceed the total cost to provide the services) or too low (total fees do not cover the total costs to provide the services), TSA will adjust the fee. If TSA adjusts the fees for this reason, TSA will publish a notice in the **Federal Register** apprising the public of the change.

Issued in Arlington, Virginia, on April 8, 2009.

Gale Rossides,

Deputy Administrator, Transportation Security Administration.

[FR Doc. E9–8349 Filed 4–10–09; 8:45 am]

BILLING CODE 9110–05–P

DEPARTMENT OF HOMELAND SECURITY

Federal Emergency Management Agency

Compendium of Flood Map Changes

AGENCY: Federal Emergency Management Agency, DHS.

ACTION: Notice of availability.

SUMMARY: The Federal Emergency Management Agency (FEMA) announces the availability of the Compendium of Flood Map Changes, which provides a listing of changes made to the National Flood Insurance Program (NFIP) maps that went into effect from July 1, 2008, through

December 31, 2008. Future notices of NFIP map changes will be made available approximately every 6 months.

DATES: The listings include changes to NFIP maps that went into effect from July 1, 2008, through December 31, 2008.

ADDRESSES: The Compendium of Flood Map Changes is available on the Internet at *http://www.fema.gov/plan/prevent/fhm/dl_comp.shtm*.

FOR FURTHER INFORMATION CONTACT: William R. Blanton Jr., Chief, Engineering Management Branch, Mitigation Directorate, Federal Emergency Management Agency, 500 C Street, SW., Washington, DC 20472, (202) 646–3151.

SUPPLEMENTARY INFORMATION: In accordance with section 1360(i) of the National Flood Insurance Reform Act of 1994, 42 U.S.C. 4101(i), this notice is provided to inform interested parties of the availability of changes made by FEMA to NFIP maps. In the Compendium of Flood Map Changes, the two listings show communities affected by map changes made by letter and communities affected by physical map changes. For each Letter of Map Change, the first listing provides the map panel(s) affected, effective (determination) date of the change, case number, and determination type. For each physical map change, the Map Revision listing provides the map panel(s) affected and the effective date of the change. The listing also identifies: (1) Those panels on which the Special Flood Hazard Areas have not been changed or have been changed only to incorporate the Letters of Map Change issued before the effective date; and (2) those panels for which a Flood Insurance Rate Map is produced for the first time, resulting only in changes to flood insurance and floodplain management requirements in the affected community. Future notices of changes to NFIP maps will be made available approximately every 6 months.

The Compendium of Flood Map Changes is available on the Internet at *http://www.fema.gov/plan/prevent/fhm/dl_comp.shtm*. The compendia shall be available, free of charge, to Federal entities for lending regulation, Federal agency lenders, and States and communities participating in the NFIP, and at a cost to all other parties. For more information, contact the FEMA Map Service Center at (800) 358–9616 or go to *http://www.msc.fema.gov*.

Authority: 42 U.S.C. 4101(i).

Dated: March 25, 2009.

Michael K. Buckley,

Acting Assistant Administrator, Mitigation Directorate, Department of Homeland Security, Federal Emergency Management Agency.

[FR Doc. E9–8371 Filed 4–10–09; 8:45 am]

BILLING CODE 9110–12–P

DEPARTMENT OF HOMELAND SECURITY

Federal Emergency Management Agency

[Internal Agency Docket No. FEMA–3304–EM; Docket ID FEMA–2008–0018]

Minnesota; Emergency and Related Determinations

AGENCY: Federal Emergency Management Agency, DHS.

ACTION: Notice.

SUMMARY: This is a notice of the Presidential declaration of an emergency for the State of Minnesota (FEMA–3304–EM), dated March 26, 2009, and related determinations.

DATES: *Effective Date:* March 26, 2009.

FOR FURTHER INFORMATION CONTACT: Peggy Miller, Disaster Assistance Directorate, Federal Emergency Management Agency, 500 C Street, SW., Washington, DC 20472, (202) 646–3886.

SUPPLEMENTARY INFORMATION: Notice is hereby given that, in a letter dated March 26, 2009, the President issued an emergency declaration under the authority of the Robert T. Stafford Disaster Relief and Emergency Assistance Act, 42 U.S.C. 5121–5207 (the Stafford Act), as follows:

I have determined that the emergency conditions in certain areas of the State of Minnesota resulting from severe storms and flooding beginning on March 16, 2009, and continuing, are of sufficient severity and magnitude to warrant an emergency declaration under the Robert T. Stafford Disaster Relief and Emergency Assistance Act, 42 U.S.C. 5121–5207 (''the Stafford Act''). Therefore, I declare that such an emergency exists in the State of Minnesota.

You are authorized to provide appropriate assistance for required emergency measures, authorized under Title V of the Stafford Act, to save lives and to protect property and public health and safety, and to lessen or avert the threat of a catastrophe in the designated areas. Specifically, you are authorized to provide assistance for emergency protective measures (Category B), including direct Federal assistance, under the Public Assistance program. This assistance excludes regular time costs for subgrantees' regular employees. In addition, you are authorized to provide such other forms of assistance under Title V of the Stafford Act as you may deem appropriate.

Consistent with the requirement that Federal assistance is supplemental, any Federal funds provided under the Stafford Act for Public Assistance will be limited to 75 percent of the total eligible costs.

In order to provide Federal assistance, you are hereby authorized to allocate from funds available for these purposes such amounts as you find necessary for Federal emergency assistance and administrative expenses.

Further, you are authorized to make changes to this declaration to the extent allowable under the Stafford Act.

The Federal Emergency Management Agency (FEMA) hereby gives notice that pursuant to the authority vested in the Administrator, Department of Homeland Security, under Executive Order 12148, as amended, Michael H. Smith, of FEMA is appointed to act as the Federal Coordinating Officer for this declared emergency.

The following areas of the State of Minnesota have been designated as adversely affected by this declared emergency:

Clay, Kittson, Marshall, Norman, Polk, Traverse, and Wilkin Counties for emergency protective measures (Category B), including direct Federal assistance, under the Public Assistance program.

The following Catalog of Federal Domestic Assistance Numbers (CFDA) are to be used for reporting and drawing funds: 97.030, Community Disaster Loans; 97.031, Cora Brown Fund; 97.032, Crisis Counseling; 97.033, Disaster Legal Services; 97.034, Disaster Unemployment Assistance (DUA); 97.046, Fire Management Assistance Grant; 97.048, Disaster Housing Assistance to Individuals and Households In Presidentially Declared Disaster Areas; 97.049, Presidentially Declared Disaster Assistance—Disaster Housing Operations for Individuals and Households; 97.050, Presidentially Declared Disaster Assistance to Individuals and Households—Other Needs; 97.036, Disaster Grants—Public Assistance (Presidentially Declared Disasters); 97.039, Hazard Mitigation Grant.

Nancy Ward,

Acting Administrator, Federal Emergency Management Agency.

[FR Doc. E9–8377 Filed 4–10–09; 8:45 am]

BILLING CODE 9111–23–P

DEPARTMENT OF HOMELAND SECURITY

Federal Emergency Management Agency

[Internal Agency Docket No. FEMA–3303–EM; Docket ID FEMA–2008–0018]

Missouri; Amendment No. 1 to Notice of an Emergency Declaration

AGENCY: Federal Emergency Management Agency, DHS.

ACTION: Notice.

SUMMARY: This notice amends the notice of an emergency declaration for the State of Missouri (FEMA–3303–EM), dated January 30, 2009, and related determinations.

DATES: *Effective Date*: January 28, 2009.

FOR FURTHER INFORMATION CONTACT: Peggy Miller, Disaster Assistance Directorate, Federal Emergency Management Agency, 500 C Street, SW., Washington, DC 20472, (202) 646–3886.

SUPPLEMENTARY INFORMATION: Notice is hereby given that the incident period for this emergency is closed effective January 28, 2009.

The following Catalog of Federal Domestic Assistance Numbers (CFDA) are to be used for reporting and drawing funds: 97.030, Community Disaster Loans; 97.031, Cora Brown Fund; 97.032, Crisis Counseling; 97.033, Disaster Legal Services; 97.034, Disaster Unemployment Assistance (DUA); 97.046, Fire Management Assistance Grant; 97.048, Disaster Housing Assistance to Individuals and Households In Presidentially Declared Disaster Areas; 97.049, Presidentially Declared Disaster Assistance—Disaster Housing Operations for Individuals and Households; 97.050, Presidentially Declared Disaster Assistance to Individuals and Households—Other Needs; 97.036, Disaster Grants—Public Assistance (Presidentially Declared Disasters); 97.039, Hazard Mitigation Grant.

Nancy Ward,

Acting Administrator, Federal Emergency Management Agency.

[FR Doc. E9–8381 Filed 4–10–09; 8:45 am]

BILLING CODE 9111–23–P

DEPARTMENT OF HOMELAND SECURITY

Federal Emergency Management Agency

[Internal Agency Docket No. FEMA–3296–EM; Docket ID FEMA–2008–0018]

Massachusetts; Amendment No. 1 to Notice of an Emergency Declaration

AGENCY: Federal Emergency Management Agency, DHS.

ACTION: Notice.

SUMMARY: This notice amends the notice of an emergency declaration for the Commonwealth of Massachusetts (FEMA–3296–EM), dated December 13, 2008, and related determinations.

DATES: *Effective Date:* December 18, 2008.

FOR FURTHER INFORMATION CONTACT: Peggy Miller, Disaster Assistance Directorate, Federal Emergency Management Agency, 500 C Street, SW., Washington, DC 20472, (202) 646–3886.

SUPPLEMENTARY INFORMATION: Notice is hereby given that the incident period for this emergency is closed effective December 18, 2008.

The following Catalog of Federal Domestic Assistance Numbers (CFDA) are to be used for reporting and drawing funds: 97.030, Community Disaster Loans; 97.031, Cora Brown Fund; 97.032, Crisis Counseling; 97.033, Disaster Legal Services; 97.034, Disaster Unemployment Assistance (DUA); 97.046, Fire Management Assistance Grant; 97.048, Disaster Housing Assistance to Individuals and Households In Presidentially Declared Disaster Areas; 97.049, Presidentially Declared Disaster Assistance—Disaster Housing Operations for Individuals and Households; 97.050, Presidentially Declared Disaster Assistance to Individuals and Households—Other Needs; 97.036, Disaster Grants—Public Assistance (Presidentially Declared Disasters); 97.039, Hazard Mitigation Grant.

Nancy Ward,

Acting Administrator, Federal Emergency Management Agency.

[FR Doc. E9–8387 Filed 4–10–09; 8:45 am]

BILLING CODE 9111–23–P

DEPARTMENT OF HOMELAND SECURITY

Federal Emergency Management Agency

[Internal Agency Docket No. FEMA–1829–DR; Docket ID FEMA–2008–0018]

North Dakota; Major Disaster and Related Determinations

AGENCY: Federal Emergency Management Agency, DHS.

ACTION: Notice.

SUMMARY: This is a notice of the Presidential declaration of a major disaster for the State of North Dakota (FEMA–1829–DR), dated March 24, 2009, and related determinations.

DATES: *Effective Date:* March 24, 2009.

FOR FURTHER INFORMATION CONTACT: Peggy Miller, Disaster Assistance Directorate, Federal Emergency Management Agency, 500 C Street, SW., Washington, DC 20472, (202) 646–3886.

SUPPLEMENTARY INFORMATION: Notice is hereby given that, in a letter dated March 24, 2009, the President declared a major disaster under the authority of the Robert T. Stafford Disaster Relief and Emergency Assistance Act, 42 U.S.C. 5121–5207 (the Stafford Act), as follows:

I have determined that the damage in certain areas of the State of North Dakota resulting from severe storms and flooding beginning on March 13, 2009, and continuing, is of sufficient severity and magnitude to warrant a major disaster declaration under the Robert T. Stafford Disaster Relief and Emergency Assistance Act, 42 U.S.C. 5121–5206 (the ''Stafford Act''). Therefore, I declare that such a major disaster exists in the State of North Dakota.

In order to provide Federal assistance, you are hereby authorized to allocate from funds available for these purposes such amounts as you find necessary for Federal disaster assistance and administrative expenses.

You are authorized to provide assistance for emergency protective measures (Category B), including direct Federal assistance under the Public Assistance program in the designated areas and any other forms of assistance under the Stafford Act that you deem appropriate subject to completion of Preliminary Damage Assessments (PDAs), unless you determine that the incident is of such unusual severity and magnitude that PDAs are not required to determine the need for supplemental Federal assistance pursuant to 44 CFR 206.33(d).

Consistent with the requirement that Federal assistance is supplemental, any Federal funds provided under the Stafford Act for Public Assistance will be limited to 75 percent of the total eligible costs. If Other Needs Assistance is later requested and warranted and if Hazard Mitigation is later warranted, Federal funding under these programs will also be limited to 75 percent of the total eligible costs.

Further, you are authorized to make changes to this declaration to the extent allowable under the Stafford Act.

The Federal Emergency Management Agency (FEMA) hereby gives notice that pursuant to the authority vested in the Administrator, under Executive Order 12148, as amended, Michael J. Hall, of FEMA is appointed to act as the Federal Coordinating Officer for this declared disaster.

The following areas of the State of North Dakota have been designated as adversely affected by this declared major disaster:

Adams, Barnes, Benson, Billings, Burleigh, Cass, Cavalier, Dickey, Dunn, Emmons, Foster, Grand Forks, Grant, Hettinger, Kidder, LaMoure, Logan, McIntosh, McKenzie, McLean, Mercer, Morton, Nelson, Oliver, Pembina, Ramsey, Ransom, Richland, Sargent, Sioux, Stark, Stutsman, Walsh, and Williams Counties and the Standing Rock and Spirit Lake Indian Reservations for emergency protective measures (Category B), including direct Federal assistance.

(The following Catalog of Federal Domestic Assistance Numbers (CFDA) are to be used for reporting and drawing funds: 97.030, Community Disaster Loans; 97.031, Cora Brown Fund; 97.032, Crisis Counseling; 97.033, Disaster Legal Services; 97.034, Disaster Unemployment Assistance (DUA); 97.046, Fire Management Assistance Grant; 97.048, Disaster Housing Assistance to Individuals and Households In Presidentially Declared Disaster Areas; 97.049, Presidentially Declared Disaster Assistance—Disaster Housing Operations for Individuals and Households; 97.050, Presidentially

Declared Disaster Assistance to Individuals and Households—Other Needs; 97.036, Disaster Grants—Public Assistance (Presidentially Declared Disasters); 97.039, Hazard Mitigation Grant.

Nancy Ward,

Acting Administrator, Federal Emergency Management Agency.

[FR Doc. E9–8378 Filed 4–10–09; 8:45 am]

BILLING CODE 9111–23–P

DEPARTMENT OF HOMELAND SECURITY

Federal Emergency Management Agency

[Internal Agency Docket No. FEMA–1813–DR; Docket ID FEMA–2008–0018]

Massachusetts; Amendment No. 2 to Notice of a Major Disaster Declaration

AGENCY: Federal Emergency Management Agency, DHS.

ACTION: Notice.

SUMMARY: This notice amends the notice of a major disaster declaration for the Commonwealth of Massachusetts (FEMA–1813–DR), dated January 5, 2009, and related determinations.

DATES: *Effective Date*: December 18, 2008.

FOR FURTHER INFORMATION CONTACT: Peggy Miller, Disaster Assistance Directorate, Federal Emergency Management Agency, 500 C Street, SW., Washington, DC 20472, (202) 646–3886.

SUPPLEMENTARY INFORMATION: Notice is hereby given that the incident period for this disaster is closed effective December 18, 2008.

The following Catalog of Federal Domestic Assistance Numbers (CFDA) are to be used for reporting and drawing funds: 97.030, Community Disaster Loans; 97.031, Cora Brown Fund; 97.032, Crisis Counseling; 97.033, Disaster Legal Services; 97.034, Disaster Unemployment Assistance (DUA); 97.046, Fire Management Assistance Grant; 97.048, Disaster Housing Assistance to Individuals and Households In Presidentially Declared Disaster Areas; 97.049, Presidentially Declared Disaster Assistance—Disaster Housing Operations for Individuals and Households; 97.050, Presidentially Declared Disaster Assistance to Individuals and Households—Other Needs; 97.036, Disaster Grants—Public Assistance (Presidentially Declared Disasters); 97.039, Hazard Mitigation Grant.

Nancy Ward,

Acting Administrator, Federal Emergency Management Agency.

[FR Doc. E9–8385 Filed 4–10–09; 8:45 am]

BILLING CODE 9111–23–P

DEPARTMENT OF HOMELAND SECURITY

Federal Emergency Management Agency

[Internal Agency Docket No. FEMA–1824–DR; Docket ID FEMA–2008–0018]

Oregon; Amendment No. 3 to Notice of a Major Disaster Declaration

AGENCY: Federal Emergency Management Agency, DHS.

ACTION: Notice.

SUMMARY: This notice amends the notice of a major disaster for the State of Oregon (FEMA–1824–DR), dated March 2, 2009, and related determinations.

DATES: *Effective Date:* April 2, 2009.

FOR FURTHER INFORMATION CONTACT: Peggy Miller, Disaster Assistance Directorate, Federal Emergency Management Agency, 500 C Street, SW., Washington, DC 20472, (202) 646–3886.

SUPPLEMENTARY INFORMATION: Notice is hereby given that the incident period is now December 13, 2008, through and including December 26, 2008.

The following Catalog of Federal Domestic Assistance Numbers (CFDA) are to be used for reporting and drawing funds: 97.030, Community Disaster Loans; 97.031, Cora Brown Fund; 97.032, Crisis Counseling; 97.033, Disaster Legal Services; 97.034, Disaster Unemployment Assistance (DUA); 97.046, Fire Management Assistance Grant; 97.048, Disaster Housing Assistance to Individuals and Households In Presidentially Declared Disaster Areas; 97.049, Presidentially Declared Disaster Assistance—Disaster Housing Operations for Individuals and Households; 97.050, Presidentially Declared Disaster Assistance to Individuals and Households—Other Needs; 97.036, Disaster Grants—Public Assistance (Presidentially Declared Disasters); 97.039, Hazard Mitigation Grant.

Nancy Ward,

Acting Administrator, Federal Emergency Management Agency.

[FR Doc. E9–8372 Filed 4–10–09; 8:45 am]

BILLING CODE 9111–23–P

DEPARTMENT OF HOMELAND SECURITY

Federal Emergency Management Agency

[Internal Agency Docket No. FEMA–1818–DR; Docket ID FEMA–2008–0018]

Kentucky; Amendment No. 3 to Notice of a Major Disaster Declaration

AGENCY: Federal Emergency Management Agency, DHS.

ACTION: Notice.

SUMMARY: This notice amends the notice of a major disaster declaration for the Commonwealth of Kentucky (FEMA–1818–DR), dated February 5, 2009, and related determinations.

DATES: *Effective Date:* April 2, 2009.

FOR FURTHER INFORMATION CONTACT: Peggy Miller, Disaster Assistance Directorate, Federal Emergency Management Agency, 500 C Street, SW., Washington, DC 20472, (202) 646–3886.

SUPPLEMENTARY INFORMATION: The notice of a major disaster declaration for the Commonwealth of Kentucky is hereby amended to include the following areas among those areas determined to have been adversely affected by the event declared a major disaster by the President in his declaration of February 5, 2009.

Allen and Clay Counties for Public Assistance [Categories C–G], (already designated for debris removal and emergency protective measures (Categories A and B), including direct Federal Assistance, under the Public Assistance program.

The following Catalog of Federal Domestic Assistance Numbers (CFDA) are to be used for reporting and drawing funds: 97.030, Community Disaster Loans; 97.031, Cora Brown Fund; 97.032, Crisis Counseling; 97.033, Disaster Legal Services; 97.034, Disaster Unemployment Assistance (DUA); 97.046, Fire Management Assistance Grant; 97.048, Disaster Housing Assistance to Individuals and Households in Presidentially Declared Disaster Areas; 97.049, Presidentially Declared Disaster Assistance—Disaster Housing Operations for Individuals and Households; 97.050, Presidentially Declared Disaster Assistance to Individuals and Households—Other Needs; 97.036, Disaster Grants—Public Assistance (Presidentially Declared Disasters); 97.039, Hazard Mitigation Grant.

Nancy Ward,

Acting Administrator, Federal Emergency Management Agency.

[FR Doc. E9–8373 Filed 4–10–09; 8:45 am]

BILLING CODE 9111–23–P

DEPARTMENT OF THE INTERIOR

Office of the Secretary

Blackstone River Valley National Heritage Corridor Commission; Notice of Meeting

Notice is hereby given in accordance with Section 552b of Title 5, United States Code, that a meeting of the John H. Chafee Blackstone River Valley National Heritage Corridor Commission will be held on Thursday, May 21, 2009.

The Commission was established pursuant to Public Law 99–647. The purpose of the Commission is to assist Federal, State and local authorities in

the development and implementation of an integrated resource management plan for those lands and waters within the Corridor.

The meeting will convene on May 21, 2009 at 9 a.m. at the Blackstone Valley Regional Vocational Technical High School, located at 65 Pleasant Street, Upton, MA for the following reasons:

1. Approval of Minutes.
2. Chairman's Report.
3. Executive Director's Report.
4. Financial Budget.
5. Public Input.

It is anticipated that about thirty people will be able to attend the session in addition to the Commission members.

Interested persons may make oral or written presentations to the Commission or file written statements. Such requests should be made prior to the meeting to: Jan H. Reitsma, Executive Director, John H. Chafee, Blackstone River Valley National Heritage Corridor Commission, One Depot Square, Woonsocket, RI 02895, Tel.: (401) 762–0250.

Further information concerning this meeting may be obtained from Jan H. Reitsma, Executive Director of the Commission at the aforementioned address.

Jan H. Reitsma,

Executive Director, BRVNHCC.

[FR Doc. E9–8322 Filed 4–10–09; 8:45 am]

BILLING CODE 4310–RK–P

DEPARTMENT OF THE INTERIOR

[LLMT921 09 L51100000.GD0000 LVEMCE280000; NDM 97633]

Notice of the Availability of the BNI Coal, Ltd., Federal Coal Lease Application Environmental Assessment and Notice of Public Hearing

AGENCY: Bureau of Land Management, Interior.

ACTION: Notice of availability and notice of public hearing.

SUMMARY: In accordance with the Federal coal management regulations at 43 CFR 3422 and 3425, the BNI Coal Lease by Application Environmental Assessment (EA) is available for public review and comment. A public hearing will be held to receive comments on the EA and associated Finding of No Significant Impact (FONSI), Fair Market Value (FMV), and Maximum Economic Recovery (MER) of the coal resources for BNI Coal, Ltd.'s (BNI) Federal Coal Lease Application NDM 97633.

DATES: The public hearing will be held at 9 a.m. on April 30, 2009. Written comments must be received on or before 4:30 p.m. on May 13, 2009.

ADDRESSES: The public hearing will be held at the BLM North Dakota Field Office Conference Room, 99 23rd Avenue West, Dickinson, North Dakota. Written comments on the FMV and MER should be sent to the Bureau of Land Management, Montana State Office, 5001 Southgate Drive, Billings, MT 59101–4669. Written comments or questions on the EA should be sent to Angela Wetz, Natural Resource Specialist, North Dakota Field Office, Bureau of Land Management, 99 23rd Avenue West, Dickinson, ND 58601. Copies of the EA are available at the North Dakota Field Office at the above address. The EA is also available on the Internet at *http://www.blm.gov/mt/st/en/fo/north_dakota_field.html*.

SUPPLEMENTARY INFORMATION: The land included in Coal Lease Application NDM 97633 contains an estimated 4.1 million tons of recoverable coal reserves. It is described as follows:

T. 142 N., R. 84 W., 5th P.M

Sec. 32: N2NW, SWNW, NWSW; 160.00 acres.

The land is adjacent to BNI's Center Mine, located in Oliver County, North Dakota.

The EA addresses the cultural, socioeconomic, environmental and cumulative impacts that would likely result from leasing these coal lands. Two alternatives are addressed in the EA:

Alternative 1: (Proposed Action) The tract would be leased, as applied for.

Alternative 2: (No Action) The application would be rejected or denied. The Federal coal reserves would be bypassed.

Proprietary data marked as confidential may be submitted to the Bureau of Land Management in response to this solicitation of public comments. Data so marked shall be treated in accordance with the laws and regulations governing the confidentiality of such information. A copy of the comments submitted by the public on FMV and MER, except those portions identified as proprietary by the author and meeting exemptions stated in the Freedom of Information Act, will be available for public inspection at the Bureau of Land Management, 5001 Southgate Drive, Billings, Montana 59101–4669, during regular business hours (9 a.m. to 4 p.m.) Monday through Friday. Other comments will be available for public inspection at the Bureau of Land Management, North Dakota Field Office, 99 23rd Avenue West, Dickinson, ND 58601 (9 a.m. to 4 p.m.) Monday through Friday.

Written comments on the FMV and MER should address, but not necessarily be limited to, the following:

1. The quality and quantity of the coal resources;
2. The mining method or methods which would achieve MER of the coal including specifications of the seams to be mined, timing and rate of production, restriction to mining, and the inclusion of the tract in an existing mining operation;
3. The FMV appraisal including but not limited to the evaluation of the tract as an incremental unit of an existing mine, selling price of the coal, mining and reclamation costs, net present value discount factors, depreciation and other tax accounting factors, value of the surface estate, and any comparable sales data on similar coal lands. The values given above may or may not change as a result of comments received from the public and changes in market conditions between now and when final economic evaluations are completed.

Before including your address, phone number, e-mail address, or other personal identifying information in your comment, please be aware that your entire comment, including your personal identifying information, may be made publicly available at any time. While you may ask us in your comment to withhold your personal identifying information from public review, we cannot guarantee that we will be able to do so.

FOR FURTHER INFORMATION CONTACT: Ed Hughes, Supervisory Industry Economist, (406–896–5057), Bureau of Land Management, Montana State Office, 5001 Southgate Drive, Billings, Montana 59101.

Phillip C. Perlewitz,

Chief, Branch of Solid Minerals.

[FR Doc. E9–8353 Filed 4–10–09; 8:45 am]

BILLING CODE 4310–$$–P

DEPARTMENT OF THE INTERIOR

Fish and Wildlife Service

[FWS–R3–R–2009–N0036; 30136–1265–0000–S3]

Kirtland's Warbler Wildlife Management Area, Located Throughout 8 Counties in the Northern Lower Peninsula of Michigan

AGENCY: Fish and Wildlife Service, Interior.

ACTION: Notice of availability: draft comprehensive conservation plan and environmental assessment; request for comments.

SUMMARY: We, the U.S. Fish and Wildlife Service (Service), announce the availability of a draft comprehensive conservation plan (CCP) and draft environmental assessment (EA) for Kirtland's Warbler Wildlife Management Area (Kirtland's Warbler WMA) for public review and comment. In this draft CCP/EA we describe how we propose to manage Kirtland's Warbler WMA for the next 15 years. The Kirtland's Warbler WMA is part of the National Wildlife Refuge System and is administered by the staff of Seney National Wildlife Refuge (NWR).

DATES: To ensure consideration, we must receive your written comments by May 15, 2009. Special mailings, newspaper articles, internet postings, and other media announcements will inform people of the opportunities to submit written comments.

ADDRESSES: Send your comments or requests for more information by any of the following methods. You may also drop off comments in person at Seney NWR.

- *Agency Web site:* View or download a copy of the document and comment at *http://www.fws.gov/midwest/Planning/kirtland/*
- *E-mail: r3planning@fws.gov*. Include ''Kirtland's Warbler WMA Draft CCP/EA'' in the subject line of the message.
- *Fax:* 906–586–3800.
- *Mail:* Attention: Refuge Manager, Seney National Wildlife Refuge, 1674 Refuge Entrance Road, Seney, MI 49883.

FOR FURTHER INFORMATION CONTACT: Tracy Casselman, 906–586–9851.

SUPPLEMENTARY INFORMATION:

Introduction

With this notice, we continue the CCP process for Kirtland's Warbler WMA, which we began by publishing a notice of intent April 21, 2006 (71 FR 20722). For more about the initial process and the history of this WMA, see that notice.

We established this WMA in the early 1980s due, in part, to the recommendations of the Kirtland's Warbler Recovery Team. The original goal was to acquire 7,500 acres of land on which habitat would be managed for the benefit of Kirtland's warbler. At present, the area contains 124 separate tracts totaling 6,582 acres.

Background

The CCP Process

The National Wildlife Refuge System Administration Act of 1966, as amended by the National Wildlife Refuge System Improvement Act of 1997 (16 U.S.C. 668dd–668ee), requires us to develop a comprehensive conservation plan for each national wildlife refuge and wildlife management area. The purpose in developing a CCP is to provide managers with a 15-year strategy for achieving wildlife management area purposes and contributing toward the mission of the National Wildlife Refuge System, consistent with sound principles of fish and wildlife management, conservation, legal mandates, and our policies. In addition to outlining broad management direction on conserving wildlife and their habitats, plans identify wildlife-dependent recreational opportunities available to the public, including opportunities for hunting, fishing, wildlife observation, wildlife photography, and environmental education and interpretation.

CCP Alternatives and Our Preferred Alternative

Priority Issues

During the public scoping process, we, other stakeholders and partners, and the public identified several priority issues, which include habitat management, nuisance species control, and recreation opportunities and visitor services. To address these issues, we developed and evaluated the following alternatives during the planning process.

Alternative 1: Current Management Direction of Habitat Management (No Action)

The current management direction of Kirtland's Warbler WMA would be maintained under this alternative. For NEPA purposes, this is referred to as the ''No Action'' alternative, a misnomer as some changes will occur over the next 15 years. Nonetheless, in Alternative 1 intensive management of existing jack pine stands would continue to occur in close cooperation with the Michigan Department of Natural Resources (DNR), with the primary objective to produce dense jack pine plantations for Kirtland's Warbler breeding habitat. The WMA staff and Michigan DNR land managers would continue to monitor habitat prescription effects and make improvements in jack pine habitat management as it pertains primarily to Kirtland's Warbler. Public use would follow the current direction and be linked to uses of the surrounding state lands. Environmental education and outreach will be limited primarily to the annual Kirtland's Warbler Festival events.

Alternative 2: Management From an Ecological Perspective

Alternative 2 would seek to make changes from the current high intensity habitat management that produces jack pine plantations for Kirtland's Warbler by trenching and planting. Future management would be from a more ecologically broad and holistic jack pine ecosystem management standpoint based on benchmark conditions derived from jack pine stands regenerated by wildfire. This alternative would include management practices that place a greater emphasis on ecological integrity and better emulating wildfire-produced jack pine stand composition and structural patterns and resulting biodiversity. Timber harvests would try to better emulate wildfire-produced stand conditions, and a range of regeneration options would be used, including prescribed fire when and where possible. An increased emphasis would also occur within law enforcement and visitor use. Enforcement of hunting regulations, trespass, and other violations would likely require more staff time and year-round presence. Visitor use would be facilitated by marking some properties with signs and by outreach to surrounding communities and users.

Alternative 3: Ecological Management and Land Ownership Consolidation (Preferred Alternative)

Alternative 3 would seek to manage existing lands as suggested in Alternative 2, but would also explore land exchanges with the state (and possibly U.S. Forest Service) to consolidate state and WMA parcels. Proposed land exchanges would likely increase the total area of land managed for Kirtland's Warbler, as well as increase management efficiency by both federal and state agencies. Existing lands and any new lands acquired through exchange would be managed to benefit the Kirtland's Warbler and other native flora and fauna of jack pine ecosystems. However, jack pine stand management would be shifted towards a more ecologically-based approach rather than the highly intensive manner of present habitat management that produces jack pine plantations. For instance, if consolidation would occur and the Service would obtain upland jack pine stands in the eastern Upper Peninsula, prescribed fire would be a more likely management tool.

Public Input

We will give the public an opportunity to provide comments upon release of the draft plan. You may

submit comments anytime during the comment period.

Public Availability of Comments

Before including your address, phone number, e-mail address, or other personal identifying information in your comment, you should know that your entire comment—including your personal identifying information—may be made publicly available at any time. While you may ask us in your comment to withhold your personal identifying information from public review, we cannot guarantee that we will be able to do so.

Dated: March 3, 2009.

Charles M. Wooley,

Acting Regional Director, U.S. Fish and Wildlife Service, Fort Snelling, Minnesota.

[FR Doc. E9–8380 Filed 4–10–09; 8:45 am]

BILLING CODE 4310–55–P

DEPARTMENT OF THE INTERIOR

National Park Service

General Management Plan; Hawaii Volcanoes National Park Hawaii; Notice of Intent To Prepare an Environmental Impact Statement

SUMMARY: In accord with section 102(2)(C) of the National Environmental Policy Act of 1969 (42 U.S.C. 4321, *et seq.*), the National Park Service (NPS) is undertaking a conservation planning and environmental impact analysis process for updating the General Management Plan (GMP) for Hawaii Volcanoes National Park. The new GMP will include a wilderness eligibility assessment for the recently accessioned Kahuku District to evaluate if lands are potentially eligible for wilderness designation, as required by NPS Management Policies 2006 for newly acquired lands. The GMP will also outline a commercial services strategy to identify the appropriate role of commercial operators in helping the park provide opportunities for visitor use and enjoyment. An Environmental Impact Statement (EIS) will be prepared concurrently with the GMP. The GMP is intended to set forth the basic management philosophy for this unit of the National Park System and provide the strategies for addressing issues and achieving identified management objectives for that unit. The GMP serves as a ''blueprint'' to guide management of natural and cultural resources and visitor use during the next 15–20 years. One or more development concept plans, which guide more detailed, site-specific preservation and development, may also be included with the GMP.

Consistent with NPS Planning Program Standards, the updated GMP will: (1) Describe the park's purpose, significance, and primary interpretive themes; (2) identify the fundamental resources and values of the park, its other important resources and values, and describe the condition of these resources; (3) describe desired conditions for cultural and natural resources and visitor experiences throughout the park; (4) develop management zoning to support these desired conditions; (5) develop alternative applications of these management zones to the park's landscape (*i.e.* zoning alternatives); (6) address user capacity; (7) analyze potential boundary modifications; (8) ensure that management recommendations are developed in consultation with interested stakeholders and the public and adopted by NPS leadership after an adequate analysis of the benefits, environmental impacts, and economic costs of alternative courses of action; (9) develop cost estimates implementing each of the alternatives; and (10) identify and prioritize subsequent detailed studies, plans and actions needed to implement the updated GMP.

Scoping Process: The purpose of scoping outreach efforts is to elicit early public comment regarding issues and concerns, the nature and extent of potential environmental impacts (and as appropriate, mitigation measures), and preliminary alternatives which should be considered for the plan update. Through the outreach activities planned in the scoping phase, the NPS welcomes information and suggestions from the public regarding resource protection, visitor use, and land management. This notice formally initiates the public scoping comment phase for the EIS process. Questions to be asked during public scoping include: (1) What do you value most about Hawaii Volcanoes National Park? (2) What do you think are the important issues facing the park? (3) Imagine you are visiting Hawaii Volcanoes National Park 20 years from now: Describe what you would like to experience. (4) Do you feel that the purpose and significance statements capture the essence of Hawaii Volcanoes National Park? (5) Other comments or concerns you would like to share?

All scoping comments must be postmarked or transmitted no later than June 30, 2009. You may submit your comments electronically through the NPS Planning, Environment and Public Comment Web site *http://parkplanning.nps.gov/havo* (select the General Management Plan from the list of projects). If it is more convenient, or if you do not have access to a computer, you can hand-deliver your comments (see below) or send your written comments to: General Management Plan, Hawaii Volcanoes National Park, Attn: Cindy Orlando, Superintendent, Hawaii Volcanoes National Park, P.O. Box 52, Hawaii National Park, HI 96718–0052.

Before including your address, phone number, e-mail address, or other personal identifying information in your comment, you should be aware that your entire comment—including your personal identifying information—may be made publicly available at any time. While you can ask us in your comment to withhold your personal identifying information from public review, we cannot guarantee that we will be able to do so.

Starting in late April a series of open houses will be hosted on Hawaii Island (including Hilo, Volcano, Naalehu and Kailua-Kona), one on Maui, and one on Oahu in Honolulu. Detailed information including times and specific locations for these meetings will be posted on the GMP Web site *http://www.nps.gov/havo/parkmgmt/plan.htm.* All attendees will be given the opportunity to ask questions and provide comments to the planning team. The GMP Web site will provide the most up-to-date information regarding the project, including project description, planning process updates, meeting notices, reports and documents, and useful links associated with the project.

SUPPLEMENTARY INFORMATION: Hawaii Volcanoes National Park (park) was established in 1916 and is operating with a 30-plus year-old Master Plan written in 1975. Numerous major changes have occurred in NPS management, policy, land ownership, and practices that directly affect the park. The park needs a comprehensive management document that will address these changes and further develop strategies to protect, maintain or restore resources and address visitor access, services, and development. The following issues are among those to be addressed in updating the GMP:

Park Visitation and Visitor Facilities—Approximately 1.6 million people visit the park each year. Since 1983, lava flows have destroyed a number of facilities including a visitor center, campground, ranger residences, and have covered cultural sites, trails, and miles of highway. Changes in volcanic activity and gas emissions require creative management to protect visitor health and safety, while encouraging access and promoting outstanding visitor experiences.

Transportation, Circulation, and Congestion—Current transportation options and infrastructure do not meet the needs of many visitors and result in congestion at several popular destinations, including sections of Crater Rim Drive such as Thurston Lava Tube (Nahuku). Volcanic events have led to closures of park roads and may continue to disrupt established travel patterns. The location, capacity, and condition of park roads, parking lots, trails, and other infrastructure should be evaluated in relation to visitor needs as well as resource protection goals.

Natural Resource Preservation, Restoration, and Research—The park is home to an amazing diversity of life, including 54 species that are Federally listed as threatened or endangered. Invasive species are an overriding concern at the park—they degrade natural ecosystems, reduce the richness of flora and fauna, and threaten the survival of the park's unique biodiversity. There is an on-going need for adequate staffing, funding, and facilities. Improving the capacity of the park to protect its native plants, animals, and natural processes requires innovative management. The park is also home to pioneering research studies and an active research community. The GMP will explore opportunities for the park to continue to expand its capacity to preserve and perpetuate natural resources through stewardship and research activities. A separate EIS effort was initiated in 2008 that is specifically focused on managing non-native ungulates and consequent restoration of native ecosystems and cultural resources affected by ungulates.

Cultural Resource Protection and Management—The park has many significant cultural landscapes, historic structures, archeological sites, ethnographic resources, and museum collections. There are also many places in the park that are culturally significant to Native Hawaiians and are used for ongoing traditional use. Managing these resources presents challenges—such as protection from visitor impacts, weathering, and vandalism, as well as insuring funding for preservation and education. Incorporating Native Hawaiian values and ongoing traditional use into future park planning will be addressed.

Climate Change—Global climate change may potentially lead to changes in local weather patterns, wildfire frequency, distribution of plant and animal communities, hurricane frequency, sea level, and increased avian disease. Pro-active planning and management actions can help the park adjust to climate change, interpret changing conditions to the public, reduce the effects on park resources, operations and visitors, and reduce emissions from park operations to the extent feasible and possible.

Sustainable Operations and Facilities—Managing a park sitting astride two active volcanoes presents many challenges. Volcanic activity has destroyed a number of operational and maintenance facilities. Today, the remaining facilities are scattered throughout the park, often in outdated structures that were not intended for these uses and may not be sustainable or efficient. The uncertainty of future volcanic activity and concerns about health and safety require operational and emergency procedures that are flexible and responsive to changing conditions.

Partnership Development—Partnerships, both inside and outside park boundaries, have greatly expanded the park's capacity to fulfill its mission and greatly enhance the quality of services provided. The park is currently working with private entities, various governmental agencies and non-profit organizations in local, regional, and landscape level conservation partnerships, such as the park's involvement in the Three Mountain Alliance and their close relationship with Hawaiian Volcano Observatory and the Pacific Island Ecosystem Research Center. Non-profit organizations also provide a range of services within the park, including visitor guided tours and educational programs, and cultural and natural resource service projects.

Business Relationships—Commercial service operators provide a range of visitor amenities within the park, including food service and lodging, guided tours and educational programs. The GMP will explore how the park can improve visitor experiences by promoting commercial services that are necessary and appropriate to support visitor needs.

Park Boundary—Activities adjacent to the park's boundaries have the potential to impact sensitive park resources. Planning for the next 15–20 years prompts pro-active thinking about best protecting the park's fundamental resources and values. In addition, the Olaa rainforest area is managed by the NPS, but is not part of the official park boundary. The GMP will consider any potential for recommendations for boundary changes.

Kahuku District—The park increased significantly in 2003 when the 116,000 acre Kahuku area was acquired. There are currently no visitor facilities at Kahuku and highway access needs to be analyzed. Resource inventory and monitoring has begun. Planning for the Kahuku District is essential for developing a cohesive vision for the entire park. Also, a wilderness eligibility assessment for the Kahuku District, as required by NPS management policy, will be included in the GMP. The park currently contains 131,542 acres of Congressionally designated Wilderness. A separate Wilderness Management Plan will be prepared following completion of the GMP update.

Decision Process: Following the scoping phase and consideration of public concerns and other agency comments, a Draft EIS will be prepared and released for public review. Availability of the forthcoming Draft EIS/GMP will be formally announced in the **Federal Register**, as well as through local and regional news media, direct mailing to the project mailing list, and via the Internet. Following due consideration of all agency and public comment as may be received, a Final EIS will be prepared; at this time it is anticipated that the final proposed plan will be available in 2013. As a delegated EIS, the official responsible for the final decision on the proposed plan is the Regional Director, Pacific West Region. Subsequently, the official responsible for implementation of the approved plan is the Superintendent, Hawaii Volcanoes National Park.

Dated: February 19, 2009.

Jonathan B. Jarvis,

Regional Director, Pacific West Region.

[FR Doc. E9–8192 Filed 4–10–09; 8:45 am]

BILLING CODE

DEPARTNENT OF THE INTERIOR

National Park Service

Resource Protection Study, Record of Decision, Curecanti National Recreation Area, Colorado

AGENCY: National Park Service, Department of the Interior.

ACTION: Notice of Availability of a Record of Decision on the Final Environmental Impact Statement (FEIS) for the Resource Protection Study, Curecanti National Recreation Area.

SUMMARY: Pursuant to the National Environmental Policy Act of 1969, 42 U.S.C. 4332(2)(C), the National Park Service (NPS) announces the availability of the Record of Decision for the Resource Protection Study, Curecanti National Recreation Area, Colorado. On December 4, 2008, the Regional Director, Intermountain Region, approved the Record of

Decision for the project. A report, jointly prepared by the National Park Service and the Bureau of Reclamation (Reclamation, the cooperating agency on the EIS), will be forwarded to Congress through the Department of the Interior. That Report to Congress will present the Resource Protection Study's findings, and will recommend the implementation of the Preferred Alternative (Proposed Action) contained in the FEIS issued on October 3, 2008. Congress will then decide what action to take, if any. As soon as practicable following such congressional action, the National Park Service will begin to implement those actions.

Alternatives Receiving Detailed Impact Assessment

Alternative 1: No Action (Continuation of Existing Conditions)

Under Alternative 1, the No Action Alternative, NPS would continue to manage the natural, cultural, and recreational resources of Curecanti National Recreation Area (NRA), and associated facilities, pursuant to Reclamation law, NPS law, the 1965 Memorandum of Agreement between NPS and Reclamation (1965 MOA), and other applicable laws and regulations. Reclamation would continue to manage the three dams and reservoirs, power plants, access roads, and other related facilities, to meet the purposes of the Colorado River Storage Project Act (CRSP); would continue to manage the East Portal area to meet the purposes of the Uncompahgre Project; and would continue to have unrestricted access to their lands and land interests, water and water interests, and facilities; pursuant to Reclamation law, the 1965 MOA, and other applicable laws and regulations. There would be no significant change in the NRA boundary. A permanent NPS presence would not be assured under this alternative.

Alternative 2: Proposed Action

Under Alternative 2, the Proposed Action, or Preferred Alternative, NPS would manage the same natural, cultural, and recreational resources and facilities as Alternative 1, pursuant to Reclamation law, NPS law, including new legislation establishing the NRA with 10,040 acres of additional agreed-upon neighboring agency lands, a revised MOA with Reclamation, and other applicable laws and regulations. Reclamation would manage their same facilities and areas of responsibility as Alternative 1, and would have unrestricted access to their lands and land interests, water and water interests, and facilities, pursuant to Reclamation law, the revised MOA, and other applicable laws and regulations. NPS would be authorized to work in partnership with private landowners within a Conservation Opportunity Area of 24,300 acres outside the NRA boundary, to implement a variety of tools, including acquiring interests in land from willing landowners, such as fee simple acquisition and conservation easements, which would promote the long-term conservation of resources. A permanent NPS presence would be assured under this alternative, which is also the environmentally preferred alternative.

Other Alternatives Considered

Four other alternatives pertaining to the proposed boundary, and various scenarios for different agencies to manage the NRA were considered. They were all eliminated from detailed impact assessment for reasons stated in the FEIS.

The Record of Decision includes a description of the background of the project, a statement of the decision made, synopses of other alternatives considered, the basis for the decision, a finding of no impairment of park resources and values, a description of the environmentally preferable alternative, and an overview of public involvement in the decision-making process.

FOR FURTHER INFORMATION CONTACT: Connie Rudd, Superintendent, Curecanti National Recreation Area, 102 Elk Creek, Gunnison, CO 81230; Tel: (970) 641–2337 ext. 220; E-mail: *connie_rudd@nps.gov*.

SUPPLEMENTARY INFORMATION: Copies of the Record of Decision may be obtained from the contact listed above or online at *http://parkplanning.nps.gov/cure*.

Dated: December 9, 2008.

Michael D. Snyder,

Regional Director, Intermountain Region, National Park Service.

Editorial Note: This document was received in the Office of the Federal Register on April 7, 2009.

[FR Doc. E9–8202 Filed 4–10–09; 8:45 am]

BILLING CODE 4310–EX–M

DEPARTMENT OF THE INTERIOR

Fish and Wildlife Service

[FWS–R6–R–2008–N0344; 60138–1265–6CCP–S3]

Final Comprehensive Conservation Plan for Sullys Hill National Game Preserve, Fort Totten, ND

AGENCY: Fish and Wildlife Service, Interior.

ACTION: Notice of availability.

SUMMARY: We, the U.S. Fish and Wildlife Service (Service), announce that our Final Comprehensive Conservation Plan (Plan) and Finding of No Significant Impact (FONSI) for the Sullys Hill National Game Preserve is available. This Final CCP describes how the Service intends to manage this refuge for the next 15 years.

ADDRESSES: A copy of the Plan may be obtained by writing to U.S. Fish and Wildlife Service, Division of Refuge Planning, P.O. Box 25486, Denver Federal Center, Denver, Colorado 80225; or by download from *http://mountain-prairie.fws.gov/planning*.

FOR FURTHER INFORMATION CONTACT: Laura King, 406–644–2211, (phone); 406–644–2661 (fax); or *laura_king@fws.gov* (e-mail).

SUPPLEMENTARY INFORMATION: Sullys Hill National Game Preserve, established in 1904, is a 1,675-acre National Wildlife Refuge sitting on the south shores of Devils Lake, about 10 miles south of the city of Devils Lake, North Dakota. This Refuge supports a unique community of habitats such as an oak, ash, basswood and aspen woodland, mixed grassed prairie, and some natural wetlands. These diverse habitats provide ''edge'' habitat for over 250 species of migratory birds, plains bison, Rocky Mountain elk, white-tailed deer, turkeys, and prairie dogs.

The Refuge is one of only 19 designated natural areas in North Dakota, of which only four are National Wildlife Refuges. It is also one of only four Refuges nationally established for bison conservation.

Sullys Hill National Game Preserve has over 60,000 visitors annually. The Refuge is becoming a progressive regional conservation learning center, promoting the conservation role of the National Wildlife Refuge System while educating visitors about the functions and benefits of prairie wetlands and grasslands. Per its legislative purpose, there is no hunting permitted on this Refuge.

The draft Plan and Environmental Assessment (EA) was made available to

the public for review and comment following the announcement in the **Federal Register** on June 26, 2008 (73 FR 36350–36352). The draft Plan and EA identified and evaluated three alternatives for managing the Refuges for the next 15 years. Alternative C was selected as the preferred alternative and will serve as the Final Plan.

The final CCP identifies goals, objectives, and strategies that describe the future management of Sullys Hill National Game Preserve. This Plan gives priority to enhancing and restoring native prairie and promoting forest regeneration. Ungulate populations will be maintained at lower levels (≤20 bison, ≤18 elk, and ≤18 white-tailed deer) to control the overgrazing and overbrowsing that has impacted Refuge habitats. Management tools, including exclusion fences and other appropriate methods such as chemical, biological, and mechanical techniques (including prescribed fire) will be used to restore and enhance habitat for the benefit of forest interior breeding and grassland nesting birds. Selected hay land acres would be restored to native prairie. Fuels treatment (including prescribed fire or other mechanical means) will be used to reduce hazardous fuels, minimizing the threat to life and property. Invasive species will be treated and areas restored. The ungulate herd health program will take a more active disease surveillance and treatment approach, including timely introduction of ungulates to maintain genetic health, particularly for the Refuges plains bison.

There would be an increase in delivery of both on-site and off-site programming of youth environmental education programs. In cooperation with local teachers, a formal wetland and grassland conservation curriculum will be designed for targeted grade levels and meet local and State standards. Emphasis will be placed on developing education partnerships with Spirit Lake Nation schools and agencies. The Refuges limited fishery will be used for educational programs only. Visitor, facility, and wildlife safety will be improved through regular routine patrols during peak and off-peak public use. A comprehensive cultural resource survey of the Refuge will be completed in partnership with other agencies and organizations. Four full-time staff will be recruited to expand, develop, and conduct biological, visitor services, law enforcement, and maintenance programs.

The Service is furnishing this Notice to advise other agencies and the public of the availability of the Final Plan, to provide information on the desired conditions for the Refuges, and to detail how the Service will implement management strategies. Based on the review and evaluation of the information contained in the EA, the Regional Director has determined that implementation of the Final Plan does not constitute a major Federal action that would significantly affect the quality of the human environment within the meaning of Section 102(2)(c) of the National Environmental Policy Act. Therefore, an Environmental Impact Statement will not be prepared.

Dated: December 23, 2008.

Noreen E. Walsh,

Deputy Regional Director.

Editorial Note: This document was received in the Office of the Federal Register on April 8, 2009.

[FR Doc. E9–8328 Filed 4–10–09; 8:45 am]

BILLING CODE 4310–55–P

DEPARTMENT OF THE INTERIOR

Bureau of Land Management

[LLUT–92000–09–L13200000–EL0000–24–1A00, UTU–84102]

Notice of the Availability of the Greens Hollow, Federal Coal Lease Application Environmental Assessment and Notice of Public Hearing

AGENCY: Bureau of Land Management, Interior.

ACTION: Notice.

SUMMARY: The Bureau of Land Management (BLM) will hold a public meeting on the proposed sale, adequacy of the Environmental Impact Statement (EIS), Fair Market Value determination and Maximum Economic Recovery consideration for coal lease application UTU–84102. The BLM is in the process of completing the EIS that will address the environmental impacts of mining this tract. The lands included in the delineated Federal coal lease tract (''Greens Hollow'') are located in Sanpete and Sevier counties. The public is invited to the meeting to make public and/or written comments on the environmental implications of leasing the proposed tract, and also to submit comments on the Fair Market Value and the Maximum Economic Recovery of the tract.

DATES: The meeting will be held May 6, 2009 at 7 p.m. in the auditorium of North Sevier High School, 350 West 400 North, Salina, Utah.

FOR FURTHER INFORMATION CONTACT: Written comments on the Fair Market Value and Maximum Economic Recovery must be received by May 5, 2009 and should be addressed to Stan Perkes, 801–539–4036, Bureau of Land Management, Utah State Office, Division of Lands and Minerals, P.O. Box 45155, Salt Lake City, Utah 84145 or e-mail to *Stan_Perkes@blm.gov*. Information on the Decision Notice/Finding of No Significant Impact can be obtained by contacting Mr. Steve Rigby, 435–636–3604. Written comments concerning the environmental impact statement must be submitted by close of business on May 18, 2009 to the Price Field Office, 125 South 600 West, Price, Utah 84501.

SUPPLEMENTARY INFORMATION: The lands included in the delineated Federal coal lease tract (''Greens Hollow'') are located in Sanpete and Sevier Counties, Utah approximately ten and one-half air miles west of Emery Utah on Manti-LaSal and Fishlake National Forest-administered surface with federally-administered minerals and are described as follows:

T. 20 S., R. 4 E., SLM, Sevier County, Utah
Sec. 36, lot 4, E½NE¼, NE¼SE¼;
T. 21 S., R. 4 E., SLM, Sevier County, Utah
Sec. 1, all;
Sec. 2, SE¼;
Sec. 11, E½, E½W½;
Sec. 12, NE¼, W½, W½SE¼;
Sec. 13, W½NE¼, NW¼;
Sec. 14, NE¼, E½NW¼;
T. 20 S., R. 5 E., SLM, Sanpete and Sevier Counties, Utah
Sec. 19, lots 5–8, E½SW¼, SE¼;
Sec. 20, S½;
Sec. 21, W½SW¼;
Sec. 28, W½;
Sec. 29, all;
Sec. 30, all;
Sec. 31, all;
Sec. 32, N½, N½S½;
Sec. 33, NW¼NW¼;
T. 21 S., R. 5 E., SLM, Sevier County, Utah
Sec. 6, all.
Approximately 6,175.39 acres.

Ark Land Company submitted the application for the coal lease. The company plans to mine the coal as an extension from their existing SUFCO Mine, if the lease is obtained. The Greens Hollow coal tract has two minable coal beds; the Upper Hiawatha and the Lower Hiawatha seam beds. The minable portions of the coal beds in this area are around eleven feet in thickness. The tract contains approximately 109,700,000 tons of coal reserve base of high-volatile C bituminous coal. The coal quality in the Upper Hiawatha coal bed on an ''as received basis'' is as follows: 11,565 Btu/lb., 7.46 percent moisture, 9.81 percent ash, 36.55 percent volatile matter, 46.1 percent fixed carbon and 0.55 percent sulfur. The coal quality in the Lower Hiawatha coal bed on an ''as received basis'' is as follows: 11,538 Btu/lb., 7.21 percent

moisture, 9.69 percent ash, 38.88 percent volatile matter, 43.85 percent fixed carbon and 1.26 percent sulfur.

In accordance with Federal coal management regulations 43 CFR 3422 and 3425, the public meeting is being held on the proposed sale to allow public comment on and discussion of the potential effects of mining and proposed lease. The meeting is being advertised in the Richfield Reaper located in Richfield, Utah and the Emery County Progress located in Castle Dale, Utah. 43 CFR 3422 states that, no less than 30 days prior to the publication of the notice of the sale, the Secretary shall submit public comments on the Fair Market Value appraisal and the Maximum Economic Recovery and on factors that may affect these two determinations.

Proprietary data marked as confidential may be submitted to the BLM in response to this solicitation of public comments. Data so marked shall be treated in accordance with the laws and regulations governing confidentiality of such information. A copy of the comments submitted by the public on fair market value and maximum economic recovery, except those portions identified as proprietary by the author and meeting exemptions stated in the Freedom of Information Act, will be available for public inspection at the Bureau of Land Management, Utah State Office during regular business hours (8 a.m.–4 p.m.) Monday through Friday. Comments on the Fair Market Value and Maximum Economic Recovery should be sent to the Bureau of Land Management and should address, but not necessarily be limited to the following information:

1. The quality of the coal resource;

2. The mining methods or methods which would achieve maximum economic recovery of the coal, including specifications of seams to be mined and the most desirable timing and rate of production;

3. Whether this tract is likely to be mined as part of an existing mine and therefore should be evaluated on a realistic incremental basis, in relation to the existing mine to which it has the greatest value;

4. Whether the tract should be evaluated as part of a potential larger mining unit and revaluated as a portion of a new potential mine (*i.e.,* a tract which does not in itself form a logical mining unit);

5. Restrictions to mining that may affect coal recovery;

6. The price that the mined coal would bring when sold;

7. Costs, including mining and reclamation, of producing the coal and the time of production;

8. The percentage rate at which anticipated income streams should be discounted, either with inflation or in the absence of inflation, in which case the anticipated rate of inflation should be given;

9. Depreciation, depletion, amortization and other tax accounting factors;

10. The value of any surface estate where held privately;

11. Documented information on the terms and conditions of recent and similar coal land transactions in the lease sale area;

12. Any comparable sales data of similar coal lands; and coal quantities and the Fair Market Value of the coal developed by BLM may or may not change as a result of comments received from the public and changes in the market conditions between now and when final economic evaluations are completed.

Dated: April 6, 2009.

Selma Sierra,

State Director.

[FR Doc. E9–8355 Filed 4–10–09; 8:45 am]

BILLING CODE 4310–DQ–P

INTERNATIONAL TRADE COMMISSION

[Investigation No. 337–TA–625]

In the Matter of Certain Self-Cleaning Litter Boxes and Components Thereof; Notice of Commission Final Determination of Violation of Section 337; Issuance of Limited Exclusion Order and Cease and Desist Orders; Termination of Investigation

AGENCY: U.S. International Trade Commission.

ACTION: Notice.

SUMMARY: Notice is hereby given that the U.S. International Trade Commission has determined that there is a violation of section 337 of the Tariff Act of 1930, as amended (19 U.S.C. 1337) by respondents Lucky Litter, LLC of Chicago, Illinois and OurPet's Company of Fairport Harbor, Ohio in the above-captioned investigation. The Commission has issued a limited exclusion order, issued cease and desist orders against the two respondents, and terminated the investigation.

FOR FURTHER INFORMATION CONTACT: Mark B. Rees, Office of the General Counsel, U.S. International Trade Commission, 500 E Street, SW., Washington, DC 20436, telephone (202) 205–3116. Copies of non-confidential documents filed in connection with this investigation are or will be available for inspection during official business hours (8:45 a.m. to 5:15 p.m.) in the Office of the Secretary, U.S. International Trade Commission, 500 E Street, SW., Washington, DC 20436, telephone (202) 205–2000. General information concerning the Commission may also be obtained by accessing its Internet server at *http://www.usitc.gov*. The public record for this investigation may be viewed on the Commission's electronic docket (EDIS) at *http://edis.usitc.gov*. Hearing-impaired persons are advised that information on this matter can be obtained by contacting the Commission's TDD terminal on (202) 205–1810.

SUPPLEMENTARY INFORMATION: The Commission instituted this investigation on December 28, 2007, based on the complaint of Applica Consumer Products, Inc. of Miramar, Florida (''Applica'') and Waters Research Company of West Dundee, Illinois (''Waters''). 72 FR 73884 (Dec. 28, 2007); 73 FR 13566 (Mar. 13, 2008). The complaint alleges violations of section 337 of the Tariff Act of 1930 (19 U.S.C. 1337) in the importation into the United States, the sale for importation, and the sale within the United States after importation of certain self-cleaning litter boxes and components thereof by reason of infringement of U.S. Patent No. RE36,847 (''the ''847 patent''). The respondents are Lucky Litter, LLC of Chicago, Illinois (''Lucky Litter'') and OurPet's Company of Fairport Harbor, Ohio (''OurPet's'').

On December 1, 2008, the presiding administrative law judge (''ALJ'') issued his final initial determination (''ID''), finding that a violation of section 337 has occurred in the importation, sale for importation, or sale after importation of certain self-cleaning litter boxes and components thereof by reason of infringement of claim 33 of the '847 patent. His final ID also included his recommendation on remedy and bonding. Respondents Lucky Litter and OurPet's, complainants Applica and Waters, and the Commission investigative attorney (''IA'') filed petitions (or contingent petitions) for review on December 16, 2008. All parties filed responses to the petitions on December 24, 2008. Complainants also filed a motion to strike on December 23, 2008, to which Lucky Litter and the IA filed oppositions on January 5, 2009.

The Commission determined to review certain issues of claim construction, as well as invalidity due

to anticipation, invalidity due to obviousness, and direct and contributory infringement on February 9, 2009. 74 FR 7263 (Feb. 13, 2009). Per its notice, the Commission also determined to grant Complainants' motion to strike, and set a schedule for the filing of written submissions on the issues under review, including certain questions posed by the Commission, and on remedy, the public interest, and bonding. The parties have briefed, with initial and reply submissions, the issues under review and the issues of remedy, the public interest, and bonding.

On review, the Commission has determined to (1) affirm the ALJ's construction of ''comb drive'' (asserted claims 8, 13, 31–33), ''comb drive means'' (asserted claims 27, 41–42), ''drive means'' (asserted claims 24–25), and ''mode selector switch * * * moveable between a manual operation position * * * and an automatic operation position'' (asserted claim 33); (2) modify the ALJ's construction of ''discharge position adjacent the discharge end wall'' (asserted claims 8, 13) to ''not distant, nearby,'' thereby deleting the synonyms ''adjoining, continguous, abutting, and coterminus;'' and (3) construe ''coupled to'' in the limitation ''comb * * * coupled to the comb drive'' (asserted claims 31–33) as ''coupled or connected, directly or indirectly;'' (4) affirm the ALJ's finding of violation of § 337 as to Respondent Lucky Litter; (5) affirm the ALJ's finding that the accused Lucky Litter products infringe claim 33 of the '847 patent; (6) affirm the ALJ's finding of violation of § 337 as to Respondent OurPet's; (7) affirm the ALJ's finding that the accused OurPet's products infringe claim 33 of the '847 patent; (8) affirm the ALJ's finding that infringed claim 33 is not invalid due to anticipation or obviousness; and (9) affirm the ID on any other findings under review except insofar as they are inconsistent with the opinion of the Commission.

The Commission determined that the appropriate form of relief in this investigation is (1) a limited exclusion order prohibiting the unlicensed entry of self-cleaning litter boxes and components thereof, including cartridges, covered by claim 33 of U.S. Patent No. Re. 36,847 that are manufactured abroad by or on behalf of, or imported by or on behalf of, Lucky Litter and OurPet's; and (2) cease and desist orders against Lucky Litter and OurPet's.

The Commission further determined that the public interest factors enumerated in section 337(d)(1) (19 U.S.C. 1337(d)(1)) do not preclude issuance of the limited exclusion order. Finally, the Commission determined that the bond under the limited exclusion order during the Presidential review period shall be in the amount of 100 percent of the entered value of the imported articles. The Commission's orders were delivered to the President and the United States Trade Representative on the day of their issuance.

The Commission has therefore terminated this investigation. The authority for the Commission's determination is contained in section 337 of the Tariff Act of 1930, as amended (19 U.S.C. 1337), and sections 210.16(c) and 210.41–.42, 210.50 of the Commission's Rules of Practice and Procedure (19 CFR 210.16(c) and 210.41–.42, 210.50).

Issued: April 8, 2009.

By order of the Commission.

Marilyn R. Abbott,

Secretary to the Commission.

[FR Doc. E9–8315 Filed 4–10–09; 8:45 am]

BILLING CODE 7020–02–P

DEPARTMENT OF JUSTICE

Notice of Lodging Proposed Consent Decree

In accordance with Departmental Policy, 28 CFR 50.7, notice is hereby given that a proposed Consent Decree in *United States of America* v. *The Port of Astoria, Oregon*, CV 09–197 KI, was lodged with the United States District Court for the District of Oregon on March 20, 2009.

This proposed Consent Decree concerns a complaint filed by the United States against The Port of Astoria pursuant to Section 301(a) of the Clean Water Act, 33 U.S.C. 1311(a), to obtain injunctive relief from and to impose civil penalties against the Port of Astoria for violating the Clean Water Act by discharging pollutants in violation of a permit into waters of the United States near Astoria, Oregon. The proposed Consent Decree resolves the allegations by requiring the Port of Astoria to pay a civil penalty and to hire and retain an environmental compliance officer.

The Department of Justice will accept written comments relating to this proposed Consent Decree for thirty (30) days from the date of publication of this Notice. Please address comments to Neil J. Evans, Assistant United States Attorney, 1000 SW. Third Ave., Suite 600, Portland, Oregon, 97204–2902, and refer to *United States of America* v. *The Port of Astoria, Oregon* (D. Ore.), CV 09–198 KI.

The proposed Consent Decree may be examined at the Clerk's Office, United States District Court for the District of Oregon, Mark O. Hatfield U.S. Courthouse, 1000 SW. Third Avenue, Portland, OR 97204–2902. In addition, the proposed Consent Decree may be viewed at *http://www.usdoj.gov/enrd/Consent_Decrees.html*.

Russell Young,

Assistant Chief, Environmental Defense Section, Environment & Natural Resources Division.

[FR Doc. E9–8314 Filed 4–10–09; 8:45 am]

BILLING CODE

DEPARTMENT OF LABOR

Employment and Training Administration

[TA–W–65,644]

Rowe International Corporation, Belding, MI; Notice of Termination of Investigation

Pursuant to Section 221 of the Trade Act of 1974, as amended, an investigation was initiated on March 20, 2009 in response to a petition filed by a company official on behalf of the workers at Rowe International Corporation, Belding, Michigan.

The petitioner has requested that the petition be withdrawn. Consequently, the investigation has been terminated.

Signed at Washington, DC, this 24th day of March 2009.

Richard Church,

Certifying Officer, Division of Trade Adjustment Assistance.

[FR Doc. E9–8272 Filed 4–10–09; 8:45 am]

BILLING CODE 4510–FN–P

DEPARTMENT OF LABOR

Employment and Training Administration

[TA–W–65,197]

Republic Doors and Frames, Inc., McKenzie, TN; Notice of Termination of Investigation

In accordance with Section 221 of the Trade Act of 1974, as amended, an investigation was initiated on February 10, 2009 in response to a petition filed by a Tennessee State AFL–CIO representative on behalf of workers of Republic Doors and Frames, Inc., McKenzie, Tennessee.

The petitioner has requested that the petition be withdrawn. Consequently, the investigation has been terminated.

Signed in Washington, DC, this 23rd day of March 2009.

Richard Church,

Certifying Officer, Division of Trade Adjustment Assistance.

[FR Doc. E9–8279 Filed 4–10–09; 8:45 am]

BILLING CODE 4510–FN–P

DEPARTMENT OF LABOR

Employment and Training Administration

[TA–W–65,282]

Grand Rapids Controls Company, LLC, a Subsidiary of Charlton Group, Incorporated, Rockford, MI; Notice of Termination of Investigation

Pursuant to Section 221 of the Trade Act of 1974, as amended, an investigation was initiated on February 18, 2009 in response to a petition filed by a company official on behalf of workers of Grand Rapids Controls Company, LLC, a subsidiary of Charlton Group, Incorporated, Rockford, Michigan.

The petitioner has requested that the petition be withdrawn. Consequently, the investigation has been terminated.

Signed at Washington, DC, this 24th day of March 2009.

Elliott S. Kushner,

Certifying Officer, Division of Trade Adjustment Assistance.

[FR Doc. E9–8283 Filed 4–10–09; 8:45 am]

BILLING CODE 4510–FN–P

DEPARTMENT OF LABOR

Employment and Training Administration

[TA–W–65,342]

Glaize Components, Shelby, NC; Notice of Termination of Investigation

Pursuant to Section 221 of the Trade Act of 1974, as amended, an investigation was initiated on February 23, 2009 in response to a worker petition filed on behalf of workers at Glaize Components, Shelby, North Carolina.

The petitioners have requested that the petition be withdrawn. Consequently, the investigation has been terminated.

Signed at Washington, DC, this 25th day of March 2009.

Richard Church,

Certifying Officer, Division of Trade Adjustment Assistance.

[FR Doc. E9–8287 Filed 4–10–09; 8:45 am]

BILLING CODE 4510–FN–P

DEPARTMENT OF LABOR

Employment and Training Administration

[TA–W–64,955]

Vishay Intertechnology, Incorporated, Vishay Dale Electronics, Columbus, NE; Notice of Termination of Investigation

Pursuant to Section 221 of the Trade Act of 1974, as amended, an investigation was initiated on January 22, 2009 in response to a petition filed by a State Workforce Office on behalf of workers at Vishay Intertechnology, Incorporated, Vishay Dale Electronics, Columbus, Nebraska.

The petitioner has requested that the petition be withdrawn. Consequently, the investigation has been terminated.

Signed at Washington, DC, this 24th day of March 2009.

Elliott S. Kushner,

Certifying Officer, Division of Trade Adjustment Assistance.

[FR Doc. E9–8275 Filed 4–10–09; 8:45 am]

BILLING CODE 4510–FN–P

DEPARTMENT OF LABOR

Employment and Training Administration

[TA–W–65, 012]

Destination Maternity Corporation, Formerly Known as Mother's Working Incorporated, Philadelphia, PA; Notice of Termination of Investigation

Pursuant to Section 221 of the Trade Act of 1974, as amended, an investigation was initiated on January 29, 2009 in response to a petition filed on behalf of workers of Destination Maternity Corporation, formerly known as Mother's Working Inc., Philadelphia, Pennsylvania.

The petitioners have requested that the petition be withdrawn. Consequently, the investigation has been terminated.

Signed at Washington, DC, this 20th day of March 2009.

Elliott S. Kushner,

Certifying Officer, Division of Trade Adjustment Assistance.

[FR Doc. E9–8276 Filed 4–10–09; 8:45 am]

BILLING CODE 4510–FN–P

DEPARTMENT OF LABOR

Employment and Training Administration

[TA–W–65,048]

United Machine Works, Inc., Greenville, NC; Notice of Termination of Investigation

Pursuant to Section 221 of the Trade Act of 1974, as amended, an investigation was initiated on January 30, 2009 in response to a petition filed by three workers on behalf of United Machine Works, Inc., Greenville, North Carolina.

The petitioners have requested that the petition be withdrawn. Consequently, the investigation has been terminated.

Signed at Washington, DC, this 25th day of March 2009.

Richard Church,

Certifying Officer, Division of Trade Adjustment Assistance.

[FR Doc. E9–8277 Filed 4–10–09; 8:45 am]

BILLING CODE 4510–FN–P

DEPARTMENT OF LABOR

Employment and Training Administration

[TA–W–65,404]

Fleetwood Industries, Inc., Leesport, PA; Notice of Termination of Investigation

Pursuant to Section 221 of the Trade Act of 1974, as amended, an investigation was initiated on February 26, 2009 in response to a petition filed on behalf of workers of Fleetwood Industries, Inc., Leesport, Pennsylvania.

The petitioner has requested that the petition be withdrawn. Consequently, the investigation has been terminated.

Signed at Washington, DC, this 25th day of March 2009.

Linda G. Poole,

Certifying Officer, Division of Trade Adjustment Assistance.

[FR Doc. E9–8291 Filed 4–10–09; 8:45 am]

BILLING CODE 4510–FN–P

DEPARTMENT OF LABOR

Employment and Training Administration

[TA–W–65,259]

Chemical Coatings, Incorporated, Hudson, NC; Notice of Termination of Investigation

Pursuant to Section 221 of the Trade Act of 1974, as amended, an investigation was initiated on February 17, 2009 in response to a petition filed by company official on behalf of workers of Chemical Coatings, Incorporated, Hudson, North Carolina.

The petitioner has requested that the petition be withdrawn. Therefore, the investigation under this petition has been terminated.

Signed at Washington, DC, this 24th day of March, 2009.

Linda G. Poole,

Certifying Officer, Division of Trade Adjustment Assistance.

[FR Doc. E9–8282 Filed 4–10–09; 8:45 am]

BILLING CODE 4510–FN–P

DEPARTMENT OF LABOR

Employment and Training Administration

[TA–W–65,254]

Piece Dye Works, Inc., North Bergen, NJ; Notice of Termination of Investigation

Pursuant to Section 221 of the Trade Act of 1974, as amended, an investigation was initiated on February 13, 2009 in response to a petition filed by Unite-Here, New York-New Jersey Regional Joint Board, on behalf of workers of Piece Dye Works, Inc., North Bergen, New Jersey.

The petitioner has requested that the petition be withdrawn. Consequently, the investigation has been terminated.

Signed at Washington, DC, this 25th day of March 2009.

Richard Church,

Certifying Officer, Division of Trade Adjustment Assistance.

[FR Doc. E9–8281 Filed 4–10–09; 8:45 am]

BILLING CODE 4510–FN–P

DEPARTMENT OF LABOR

Employment and Training Administration

[TA–W–65,605]

Weyerhaeuser Level, Grayling, MI; Notice of Termination of Investigation

Pursuant to Section 221 of the Trade Act of 1974, as amended, an investigation was initiated on March 16, 2009 in response to a petition filed by a company official on behalf of Weyerhaeuser Level, Grayling, Michigan.

The petitioner has requested that the petition be withdrawn. Consequently, the investigation has been terminated.

Signed at Washington, DC, this 24th day of March 2009.

Elliott S. Kushner,

Certifying Officer, Division of Trade Adjustment Assistance.

[FR Doc. E9–8302 Filed 4–10–09; 8:45 am]

BILLING CODE 4510–FN–P

DEPARTMENT OF LABOR

Employment and Training Administration

[TA–W–65,586]

Eaton Corporation Truck Components, Greenfield, IN; Notice of Termination of Investigation

Pursuant to Section 221 of the Trade Act of 1974, as amended, an investigation was initiated on March 13, 2009 in response to a worker petition filed by a company official on behalf of workers of Eaton Corporation, Truck Components, Greenfield, Indiana.

The petitioner has requested that the petition be withdrawn. Consequently, the investigation has been terminated.

Signed at Washington, DC this 23rd day of March 2009.

Linda G. Poole,

Certifying Officer, Division of Trade Adjustment Assistance.

[FR Doc. E9–8300 Filed 4–10–09; 8:45 am]

BILLING CODE 4510–FN–P

DEPARTMENT OF LABOR

Employment and Training Administration

[TA–W–65,567]

Webb Wheel Products, Inc., Cullman, AL; Notice of Termination of Investigation

Pursuant to Section 221 of the Trade Act of 1974, as amended, an investigation was initiated on March 11, 2009 in response to a petition filed on behalf of workers of Webb Wheel Products, Inc., Cullman, Alabama.

The petitioner has requested that the petition be withdrawn. Consequently, the investigation has been terminated.

Signed at Washington, DC, this 25th day of March 2009.

Linda G. Poole,

Certifying Officer, Division of Trade Adjustment Assistance.

[FR Doc. E9–8299 Filed 4–10–09; 8:45 am]

BILLING CODE 4510–FN–P

DEPARTMENT OF LABOR

Employment and Training Administration

[TA–W–65,558]

Hon Company–HNI, Owensboro, KY; Notice of Termination of Investigation

Pursuant to Section 221 of the Trade Act of 1974, as amended, an investigation was initiated on March 11, 2009 in response to a worker petition filed by the United Steelworkers, Amalgamated Local 9443 Unit 06 on behalf of workers of Hon Company—HNI, Owensboro, Kentucky.

The petitioner has requested that the petition be withdrawn. Consequently, the investigation has been terminated.

Signed at Washington, DC, this 23rd day of March 2009.

Linda G. Poole,

Certifying Officer, Division of Trade Adjustment Assistance.

[FR Doc. E9–8298 Filed 4–10–09; 8:45 am]

BILLING CODE 4510–FN–P

DEPARTMENT OF LABOR

Employment and Training Administration

[TA–W–65,543]

Imperial Carbide, Inc., Meadville, PA; Notice of Termination of Investigation

Pursuant to Section 221 of the Trade Act of 1974, as amended, an investigation was initiated on March 10, 2009, in response to a worker petition filed by a company official on behalf of workers at Imperial Carbide, Inc., Meadville, Pennsylvania.

The petitioner has requested that the petition be withdrawn. Consequently, the investigation has been terminated.

Signed at Washington, DC, this 23rd day of March 2009.

Linda G. Poole,

Certifying Officer, Division of Trade Adjustment Assistance.

[FR Doc. E9–8297 Filed 4–10–09; 8:45 am]

BILLING CODE 4510–FN–P

DEPARTMENT OF LABOR

Employment and Training Administration

[TA–W–65,535]

Eaton Aviation Corporation, Aurora, CO; Notice of Termination of Investigation

Pursuant to Section 221 of the Trade Act of 1974, as amended, an investigation was initiated on March 10, 2009 in response to a petition filed by a company official on behalf of workers of Eaton Aviation Corporation, Aurora, Colorado.

The petitioner has requested that the petition be withdrawn. Consequently, the investigation has been terminated.

Signed at Washington, DC, this 24th day of March 2009.

Linda G. Poole,

Certifying Officer, Division of Trade Adjustment Assistance.

[FR Doc. E9–8296 Filed 4–10–09; 8:45 am]

BILLING CODE 4510–FN–P

DEPARTMENT OF LABOR

Employment and Training Administration

[TA–W–65,525]

Broan-Nutone Company, Hartford, WI; Notice of Termination of Investigation

Pursuant to Section 221 of the Trade Act of 1974, as amended, an investigation was initiated on March 9, 2009 in response to a worker petition filed by a Wisconsin state agency representative on behalf of workers of Broan-Nutone Company, Hartford, Wisconsin.

The petitioner has requested that the petition be withdrawn. Consequently, the investigation has been terminated.

Signed at Washington, DC, this 20th day of March 2009.

Richard Church,

Certifying Officer, Division of Trade Adjustment Assistance.

[FR Doc. E9–8295 Filed 4–10–09; 8:45 am]

BILLING CODE 4510–FN–P

DEPARTMENT OF LABOR

Employment and Training Administration

[TA–W–65,522]

Bernhardt Furniture Company Corporate Office, Lenoir, NC; Notice of Termination of Investigation

Pursuant to Section 221 of the Trade Act of 1974, as amended, an investigation was initiated on March 9, 2009 in response to a petition filed on behalf of workers of Bernhardt Furniture Company, Corporate Office, Lenoir, North Carolina.

The petitioners have requested that the petition be withdrawn. Consequently, the investigation has been terminated.

Signed at Washington, DC, this 24th day of March 2009

Linda G. Poole,

Certifying Officer, Division of Trade Adjustment Assistance.

[FR Doc. E9–8294 Filed 4–10–09; 8:45 am]

BILLING CODE 4510–FN–P

DEPARTMENT OF LABOR

Employment and Training Administration

[TA–W–65,479]

Vaagen Brothers Lumber, Inc., Colville, WA; Notice of Termination of Investigation

Pursuant to Section 221 of the Trade Act of 1974, as amended, an investigation was initiated on March 4, 2009 in response to a worker petition filed by a company official on behalf of workers at Vaagen Brothers Lumber, Inc., Colville, Washington.

The petitioner has requested that the petition be withdrawn. Consequently, the investigation has been terminated.

Signed at Washington, DC, this 24th day of March 2009.

Richard Church,

Certifying Officer, Division of Trade Adjustment Assistance.

[FR Doc. E9–8293 Filed 4–10–09; 8:45 am]

BILLING CODE 4510–FN–P

DEPARTMENT OF LABOR

Employment and Training Administration

[TA–W–65,451]

Reynolds Food Packaging, Grove City, PA; Notice of Termination of Investigation

Pursuant to Section 221 of the Trade Act of 1974, as amended, an investigation was initiated on March 02, 2009, in response to a worker petition filed by the United Steelworkers of America, Local 5306, on behalf of workers at Reynolds Food Packaging, Grove City, Pennsylvania.

The petitioner has requested that the petition be withdrawn. Consequently, the investigation has been terminated.

Signed at Washington, DC, this 23rd day of March 2009.

Linda G. Poole,

Certifying Officer, Division of Trade Adjustment Assistance.

[FR Doc. E9–8292 Filed 4–10–09; 8:45 am]

BILLING CODE 4510–FN–P

DEPARTMENT OF LABOR

Employment and Training Administration

[TA–W–65,400]

Hyosung USA Inc., Utica Plant Division, Utica, NY; Notice of Termination of Investigation

Pursuant to Section 221 of the Trade Act of 1974, as amended, an investigation was initiated on February 26, 2009 in response to a petition filed by a company official on behalf of the workers of Hyosung USA Inc., Utica Plant division, Utica, New York.

The petitioner has requested that the petition be withdrawn. Consequently, the investigation has been terminated.

Signed at Washington, DC, this 24th day of March 2009.

Linda G. Poole,

Certifying Officer, Division of Trade Adjustment Assistance.

[FR Doc. E9–8290 Filed 4–10–09; 8:45 am]

BILLING CODE 4510–FN–P

DEPARTMENT OF LABOR

Employment and Training Administration

[TA–W–65,391]

Wilson Sporting Goods Company, Ada, OH; Notice of Termination of Investigation

Pursuant to Section 221 of the Trade Act of 1974, as amended, an investigation was initiated on February 26, 2009 in response to a petition filed by UNITE HERE, Local 224 on behalf of workers of Wilson Sporting Goods Company, Ada, Ohio.

The petitioner has requested that the petition be withdrawn. Therefore, the investigation under this petition has been terminated.

Signed at Washington, DC, this 24th day of March, 2009.

Linda G. Poole,

Certifying Officer, Division of Trade Adjustment Assistance.

[FR Doc. E9–8289 Filed 4–10–09; 8:45 am]

BILLING CODE 4510–FN–P

DEPARTMENT OF LABOR

Employment and Training Administration

[TA–W–65,389]

IAC Fremont, LLC, New Production Introduction Assembly Formerly Known as Lear Corporation–Fremont, Fremont, OH; Notice of Termination of Investigation

Pursuant to Section 221 of the Trade Act of 1974, as amended, an investigation was initiated on February 26, 2009 in response to a worker petition filed by UNITE–HERE Locals 224–T, 2375, and 323 on behalf of workers of IAC Fremont, LLC, New Production Introduction Assembly, Fremont, Ohio.

Additionally, workers' wages were also reported under another corporate name: Lear Corporation—Fremont.

The petitioner has requested that the petition be withdrawn. Consequently, the investigation has been terminated.

Signed at Washington, DC, this 20th day of March 2009.

Richard Church,

Certifying Officer, Division of Trade Adjustment Assistance.

[FR Doc. E9–8288 Filed 4–10–09; 8:45 am]

BILLING CODE 4510–FN–P

DEPARTMENT OF LABOR

Employment and Training Administration

[TA–W–65,289]

Parkdale Mills, Inc., Gastonia, NC; Notice of Termination of Investigation

In accordance with Section 221 of the Trade Act of 1974, as amended, an investigation was initiated on February 18, 2009 in response to a petition filed by a company official on behalf of workers of Parkdale Mills, Inc., Gastonia, North Carolina.

The petitioner has requested that the petition be withdrawn. Consequently, the investigation has been terminated.

Signed in Washington, DC, this 25th day of March 2009.

Richard Church,

Certifying Officer, Division of Trade Adjustment Assistance.

[FR Doc. E9–8284 Filed 4–10–09; 8:45 am]

BILLING CODE 4510–FN–P

DEPARTMENT OF LABOR

Employment and Training Administration

[TA–W–65,208]

Citibank/Citigroup, Hagerstown, MD; Notice of Termination of Investigation

Pursuant to Section 221 of the Trade Act of 1974, as amended, an investigation was initiated on February 10, 2009 in response to a worker petition filed by three workers on behalf of Citibank/Citigroup, Hagerstown, Maryland.

The petitioners have requested that the petition be withdrawn. Consequently, the investigation has been terminated.

Signed at Washington, DC, this 25th day of March 2009.

Richard Church,

Certifying Officer, Division of Trade Adjustment Assistance.

[FR Doc. E9–8280 Filed 4–10–09; 8:45 am]

BILLING CODE 4510–FN–P

DEPARTMENT OF LABOR

Employment and Training Administration

[TA–W–65,084]

Modine Manufacturing Company, Pemberville, OH; Notice of Termination of Investigation

Pursuant to Section 221 of the Trade Act of 1974, as amended, an investigation was initiated on February 3, 2009, in response to a petition filed on behalf of workers at Modine Manufacturing Company, Pemberville, Ohio.

The petitioner has requested that the petition be withdrawn. Consequently, the investigation has been terminated.

Signed at Washington, DC, this 24th day of March 2009.

Elliott S. Kushner,

Certifying Officer, Division of Trade Adjustment Assistance.

[FR Doc. E9–8278 Filed 4–10–09; 8:45 am]

BILLING CODE 4510–FN–P

DEPARTMENT OF LABOR

Employment and Training Administration

[TA–W–64,766]

Veyance Technologies, Inc. Formerly Goodyear, Sun Prairie, WI; Notice of Termination of Investigation

Pursuant to Section 221 of the Trade Act of 1974, as amended, an investigation was initiated on December 23, 2008 in response to a worker petition filed by the United Steelworkers of America, Local 904L on behalf of workers of Veyance Technologies, Inc., formerly Goodyear, Sun Prairie, Wisconsin.

The petitioner has requested that the petition be withdrawn. Consequently, the investigation has been terminated.

Signed at Washington, DC, this 25th day of March 2009.

Linda G. Poole,

Certifying Officer, Division of Trade Adjustment Assistance.

[FR Doc. E9–8273 Filed 4–10–09; 8:45 am]

BILLING CODE 4510–FN–P

DEPARTMENT OF LABOR

Employment and Training Administration

[TA–W–64,929]

Pfizer Global Manufacturing, a Subsidiary of Pfizer Inc., Terre Haute, IN; Notice of Termination of Investigation

Pursuant to Section 221 of the Trade Act of 1974, as amended, an investigation was initiated on January 22, 2009 in response to a petition filed on behalf of the workers of Pfizer Global Manufacturing, a subsidiary of Pfizer, Terre Haute, Indiana.

The petitioner has requested that the petition be withdrawn. Consequently, the investigation has been terminated.

Signed at Washington, DC, this 24th day of March 2009.

Linda G. Poole,

Certifying Officer, Division of Trade Adjustment Assistance.

[FR Doc. E9–8274 Filed 4–10–09; 8:45 am]

BILLING CODE 4510–FN–P

DEPARTMENT OF LABOR

Employment and Training Administration

[TA–W–65,592]

Tyco Electronics, Greensboro, NC; Notice of Termination of Investigation

Pursuant to Section 221 of the Trade Act of 1974, as amended, an investigation was initiated on March 16, 2009 in response to a petition filed on behalf of workers of Tyco Electronics, Greensboro, North Carolina.

The petitioners have requested that the petition be withdrawn. Consequently, the investigation has been terminated.

Signed at Washington, DC, this 24th day of March 2009.

Linda G. Poole,

Certifying Officer, Division of Trade Adjustment Assistance.

[FR Doc. E9–8301 Filed 4–10–09; 8:45 am]

BILLING CODE 4510–FN–P

NATIONAL AERONAUTICS AND SPACE ADMINISTRATION

[Notice (09–035)]

NASA International Space Station Advisory Committee; Meeting

AGENCY: National Aeronautics and Space Administration (NASA).

ACTION: Notice of meeting.

SUMMARY: In accordance with the Federal Advisory Committee Act, Public Law 92–463, as amended, the National Aeronautics and Space Administration announces an open meeting of the NASA International Space Station Advisory Committee.

DATES: May 08, 2009, 1–1:30 p.m. Eastern Daylight Time.

ADDRESSES: NASA Headquarters, 300 E Street, SW., Room 7H45, Washington, DC 20546.

FOR FURTHER INFORMATION CONTACT: Dr. J. Donald Miller, Office of External Relations, (202) 358–1527, National Aeronautics and Space Administration, Washington, DC 20546–0001.

SUPPLEMENTARY INFORMATION: This meeting will be open to the public up to the seating capacity of the room. Five seats will be reserved for members of the press. The purpose of the meeting is to assess NASA and Roscosmos plans to support a six-person crew aboard the International Space Station, including transportation, crew rotation, training, and micro meteoroid and orbital debris shielding. Attendees will be requested to sign a register and to comply with NASA security requirements, including the presentation of a valid picture ID, before receiving an access badge. Foreign nationals attending this meeting will be required to provide a copy of their passport, visa, or green card in addition to providing the following information no less than 7 working days prior to the meeting: Full name; gender; date/place of birth; citizenship; visa/green card information (number, type, expiration date); passport information (number, country, expiration date); employer/affiliation information (name of institution, address, country, phone); title/position of attendee. To expedite admittance, attendees with U.S. citizenship can provide identifying information 2 working days in advance by contacting Dr. Miller via e-mail at *j.d.miller@nasa.gov* or by telephone at (202) 358–1527. It is imperative that the meeting be held on this date to accommodate the scheduling priorities of the key participants.

Dated: April 3, 2009.

P. Diane Rausch,

Advisory Committee Management Officer, National Aeronautics and Space Administration.

[FR Doc. E9–8312 Filed 4–10–09; 8:45 am]

BILLING CODE 7510–13–P

THE NATIONAL FOUNDATION ON THE ARTS AND THE HUMANITIES

Meetings of Humanities Panel

AGENCY: The National Endowment for the Humanities.

ACTION: Notice of meetings.

SUMMARY: Pursuant to the provisions of the Federal Advisory Committee Act (Pub. L. 92–463, as amended), notice is hereby given that the following meetings of Humanities Panels will be held at the Old Post Office, 1100 Pennsylvania Avenue, NW., Washington, DC 20506.

FOR FURTHER INFORMATION CONTACT: Michael P. McDonald, Advisory Committee Management Officer, National Endowment for the Humanities, Washington, DC 20506; telephone (202) 606–8322. Hearing-impaired individuals are advised that information on this matter may be obtained by contacting the Endowment's TDD terminal on (202) 606–8282.

SUPPLEMENTARY INFORMATION: The proposed meetings are for the purpose of panel review, discussion, evaluation and recommendation on applications for financial assistance under the National Foundation on the Arts and the Humanities Act of 1965, as amended, including discussion of information given in confidence to the agency by the grant applicants. Because the proposed meetings will consider information that is likely to disclose trade secrets and commercial or financial information obtained from a person and privileged or confidential and/or information of a personal nature the disclosure of which would constitute a clearly unwarranted invasion of personal privacy, pursuant to authority granted me by the Chairman's Delegation of Authority to Close Advisory Committee meetings, dated July 19, 1993, I have determined that these meetings will be closed to the public pursuant to subsections (c)(4), and (6) of section 552b of Title 5, United States Code.

1. *Date:* May 5, 2009.
Time: 9 a.m. to 5:30 p.m.
Room: 315.
Program: This meeting will review applications for Landmarks of American History and Culture, submitted to the Division of Education Programs, at the March 17, 2009 deadline.

2. *Date:* May 6, 2009.
Time: 9 a.m. to 5:30 p.m.
Room: 315.
Program: This meeting will review applications for Landmarks of American History and Culture, submitted to the Division of Education Programs, at the March 17, 2009 deadline.

3. *Date:* May 7, 2009.
Time: 9 a.m. to 5:30 p.m.
Room: 315.
Program: This meeting will review applications for Landmarks of American History and Culture, submitted to the Division of Education Programs, at the March 17, 2009 deadline.

4. *Date:* May 8, 2009.
Time: 9 a.m. to 5:30 p.m.
Room: 315.
Program: This meeting will review applications for Landmarks of American History and Culture, submitted to the Division of Education Programs, at the March 17, 2009 deadline.

Michael P. McDonald,

Advisory Committee Management Officer.

[FR Doc. E9–8347 Filed 4–10–09; 8:45 am]

BILLING CODE 7536–01–P

POSTAL SERVICE

Change in Rates of General Applicability for Competitive Products; Correction

AGENCY: Postal Service. ™

ACTION: Notice; correction.

SUMMARY: The Postal Service published in the **Federal Register** of February 24, 2009 (74 FR 8434), in accordance with 39 U.S.C. 3632(b)(2), a Notice document providing the February 3, 2009 Decision of the Governors of the United States Postal Service on Changes in Rates and Classes of General Applicability for Certain Competitive Products (Governors Decision No. 09–01), and a record of the proceedings in connection with the Decision. The Decision did not include planned increases to pickup on demand fees for Express Mail®, Priority Mail®, GXG, Express Mail International (EMI), and Priority Mail International (PMI) services to conform to the change in the Pickup on Demand ™ service fee for Parcel Post® Single-Piece, which was raised in Postal Regulatory Commission Docket No. R2009–2 from $14.75 to $15.30. This document accordingly sets forth a correction to the prior notice to give effect to the planned change in Pickup on Demand fees for competitive services, to include Express Mail, Priority Mail, GXG, EMI, and PMI services.

DATES: This correction is effective April 13, 2009 and is applicable on May 11, 2009.

FOR FURTHER INFORMATION CONTACT: Anthony Alverno, 202–268–2997.

SUPPLEMENTARY INFORMATION:

Background

On February 3, 2009, the Governors of the Postal Service established prices and classification changes for competitive products, pursuant to their authority under 39 U.S.C. 3632. On February 24, 2009, the Governors' Decision and the record of proceedings in connection with the Decision were published in the **Federal Register** as required by 39 U.S.C. 3632(b)(2). Following the adoption of the Governors' Decision, it was discovered that pickup on demand fees for Express Mail®, Priority Mail®, GXG, EMI, and PMI services set out in sections 2105.6, 2110.6, 2205.6, and 2215.7 of the Mail Classification Schedule were not identified as increasing from $14.75 to $15.30. This increase in the fee when combined with these services conforms to the increase in fees for Pickup on Demand service provided in connection with Parcel Post Single-Piece service. The fee for Pickup on Demand provided in connection with Parcel Post Single-Piece was changed in Postal Regulatory Commission (PRC) Docket No. R2009–2 at section 1405.6 of the Mail Classification Schedule and is to become effective on May 11, 2009. See United States Postal Service Notice of Price Adjustment, PRC Docket No. R2009–2 (filed February 10, 2009); PRC Order No. 191 (March 16, 2009).[1]

Postal Service management has advised the Governors of this matter and has provided them with information concerning the corrected fees. Concurrently with the submission of this notice to the **Federal Register**, the Postal Service will file with the PRC a corresponding notice of correction in PRC Docket No. CP2009–23.

Need for Correction

The rates for Pickup on Demand service in sections 2105.6, 2110.6, 2205.6, and 2215.7 of the Mail Classification Schedule, attached to Governors' Decision No. 09–01, did not incorporate the correct fees for pickup on demand services combined with Express Mail, Priority Mail, GXG, Express Mail International (EMI), and Priority Mail International (PMI) services.

Correction

Corrections to the Mail Classification Schedule, which is marked as Attachment B to Governors' Decision 09–01, published in the **Federal Register** of February 24, 2009, should read as follows:

Mail Classification Schedule

* * * * *

2001 COMPETITIVE PRODUCT DESCRIPTIONS

* * * * *

2100 DOMESTIC PRODUCTS

2105 Express Mail

* * * * *

2105.6 Prices

* * * * *

Pickup on Demand

Add $15.30 for each Pickup on Demand stop.

* * * * *

2110 Priority Mail

* * * * *

2110.6 Prices

Retail Pickup on Demand

Add $15.30 for each Pickup on Demand stop.

* * * * *

Commercial Base Priority Mail Zone/Weight

* * * * *

Commercial Pickup On Demand

Add $15.30 for each Pickup on Demand stop.

* * * * *

Commercial Plus Priority Mail Zone/Weight

* * * * *

Commercial Pickup on Demand

Add $15.30 for each Pickup on Demand stop.

2200 INTERNATIONAL PRODUCTS

2205 Outbound International Expedited Services

* * * * *

2205.6 Prices

* * * * *

Pickup on Demand

Add $15.30 for each Pickup on Demand stop.

* * * * *

2215 Outbound Priority Mail International

* * * * *

2215.7 Prices

Pickup on Demand

Add $15.30 for each Pickup on Demand stop.

* * * * *

Stanley F. Mires,

Chief Counsel, Legislative.

[FR Doc. E9–8501 Filed 4–9–09; 4:15 pm]

BILLING CODE 7710–12–P

[1] Notice of the change in the pickup on demand fee for domestic Express Mail and Priority Mail was published with other changes to the Domestic Mail Manual in the **Federal Register** on February 23, 2009 (74 FR 8009).

SECURITIES AND EXCHANGE COMMISSION

[Release No. 34–59709; File No. SR–BATS–2009–008]

Self-Regulatory Organizations; BATS Exchange, Inc.; Notice of Filing and Immediate Effectiveness of Proposed Rule Change Related to Fees for Use of BATS Exchange, Inc.

April 6, 2009.

Pursuant to Section 19(b)(1) of the Securities Exchange Act of 1934 (the

''Act''),[1] and Rule 19b–4 thereunder,[2] notice is hereby given that on March 31, 2009, BATS Exchange, Inc. (''BATS'' or the ''Exchange'') filed with the Securities and Exchange Commission (''Commission'') the proposed rule change as described in Items I, II and III below, which Items have been prepared by the Exchange. BATS has designated the proposed rule change as one establishing or changing a member due, fee, or other charge imposed by the Exchange under Section 19(b)(3)(A)(ii) of the Act[3] and Rule 19b–4(f)(2) thereunder,[4] which renders the proposed rule change effective upon filing with the Commission. The Commission is publishing this notice to solicit comments on the proposed rule change from interested persons.

I. Self-Regulatory Organization's Statement of the Terms of Substance of the Proposed Rule Change

The Exchange proposes to modify its fee schedule applicable to use of the Exchange. While changes to the fee schedule pursuant to this proposal will be effective upon filing, the changes will become operative on April 1, 2009.

The text of the proposed rule change is available at the Exchange's Web site at *http://www.batstrading.com*, at the principal office of the Exchange, and at the Commission's Public Reference Room.

II. Self-Regulatory Organization's Statement of the Purpose of, and Statutory Basis for, the Proposed Rule Change

In its filing with the Commission, the Exchange included statements concerning the purpose of and basis for the proposed rule change and discussed any comments it received on the proposed rule change. The text of these statements may be examined at the places specified in Item IV below. The Exchange has prepared summaries, set forth in Sections A, B, and C below, of the most significant parts of such statements.

(A) Self-Regulatory Organization's Statement of the Purpose of, and Statutory Basis for, the Proposed Rule Change

1. Purpose

The Exchange proposes to modify its fee schedule applicable to use of the Exchange effective April 1, 2009, in order to: (i) Reduce the rebate provided to Members who add liquidity to the Exchange in Tape A securities and Tape C securities from $0.0024 per share to $0.0023 per share; (ii) expand the securities for which the Exchange does not pay a rebate to all securities priced below $5.00, rather than securities priced below $1.00, and provide a rebate of $0.0001 per share for trades that remove liquidity in securities priced below $5.00; (iii) decrease the fee charged by the Exchange for its ''CYCLE'' routing strategy from $0.0029 per share to $0.0026 per share; and (iv) make modifications to certain of the Exchange's non-standard routing charges. In addition to these specific changes, which are discussed in further detail below, the Exchange has proposed additional modifications to its fee schedule for clarity. For instance, the Exchange has proposed re-ordering the list of non-standard routing changes, added language to certain headings to make clear the distinction between securities priced at $5.00 or above and below $5.00, and proposed modified language describing non-displayed liquidity and Modified Destination Specific Orders to more closely reflect the language typically used by Members of the Exchange. The Exchange has also proposed removing a descriptive chart that it previously included on its fee schedule.

(i) Reduction of Tape A and C Rebates

The Exchange proposes to reduce the rebate provided to Members who add liquidity to the Exchange in Tape A and Tape C securities from $0.0024 per share to $0.0023 per share. The Exchange believes that this proposed fee change is consistent with its long-term goal of providing access to the Exchange at competitive rates that do not expose the Exchange to significant losses or capital outlays.

(ii) Securities Priced Below $5.00

The Exchange does not currently charge fees for removing liquidity nor does the Exchange provide a rebate for adding liquidity in any securities priced below $1.00. The Exchange proposes to expand the no-rebate structure for liquidity adders to all securities priced below $5.00. In addition, the Exchange proposes to provide a rebate of $0.0001 per share for all orders that remove liquidity in securities priced below $5.00. The Exchange believes that this proposed fee structure, which differs depending on whether a security trades below $5.00 or at or above $5.00, will benefit both the Exchange and Members of the Exchange by encouraging market participants to send order flow in lower priced securities to the Exchange for execution, resulting in higher liquidity and better execution quality. In addition, the Exchange believes that the fee and rebate rates it proposes are reasonable.

(iii) Decrease of Standard Routing Fee

The Exchange proposes to decrease the fee charged by the Exchange for its CYCLE routing strategy[5] from $0.0029 per share to $0.0026 per share. This proposed change reflects decreases recently made by certain other protected markets to their access fees.

(iv) Changes to Non-Standard Routing Charges

As described below, the Exchange also proposes certain changes to the non-standard routing charges charged to Members. First, the Exchange proposes to modify the routing charges applicable to Destination Specific Orders sent to all market centers that display Protected Quotations[6] (each a ''Protected Market Center'') other than the NYSE, NYSE Arca or NASDAQ, by increasing the standard charge for all such orders from $0.0029 per share to $0.0030 per share. Second, for Destination Specific Orders routed to NYSE, the Exchange proposes providing a discounted price from the NYSE's current removal fee of $0.0018 per share by charging $0.0017 per share for such orders. Third, with respect to Destination Specific Orders routed to NYSE Arca and NASDAQ, the Exchange will charge the lowest transaction fee currently available at such market centers in each Tape. Specifically, the Exchange will charge: (A) $0.0028 per share for Destination Specific orders executed at NYSE Arca; (B) $0.0026 per share for Destination Specific orders in Tape A securities and Tape C securities executed at NASDAQ; and (C) $0.0029 per share for Destination Specific orders in Tape B securities executed at NASDAQ. Finally, to be consistent with the change to the CYCLE routing fee described above, the Exchange proposes to charge 0.26%, rather than 0.29%, of the total dollar value of the execution for any security (all Tapes) priced under $1.00 per share that is routed away from the Exchange.

2. Statutory Basis

The Exchange believes that the proposed rule change is consistent with the requirements of the Act and the rules and regulations thereunder that

[1] 15 U.S.C. 78s(b)(1).

[2] 17 CFR 240.19b–4.

[3] 15 U.S.C. 78s(b)(3)(A)(ii).

[4] 17 CFR 240.19b–4(f)(2).

[5] The CYCLE routing strategy routes orders to any market center or execution venue other than a dark liquidity pool. Orders are routed to dark liquidity pools through the Exchange's DART routing strategy. Orders executed through DART cost $0.0020 per share, which the Exchange has not proposed to change at this time.

[6] As defined in BATS Rule 1.5(s).

are applicable to a national securities exchange, and, in particular, with the requirements of Section 6 of the Act.[7] Specifically, the Exchange believes that the proposed rule change is consistent with Section 6(b)(4) of the Act,[8] in that it provides for the equitable allocation of reasonable dues, fees and other charges among members and other persons using any facility or system which the Exchange operates or controls. The Exchange notes that it operates in a highly competitive market in which market participants can readily direct order flow to competing venues if they deem fee levels at a particular venue to be excessive. The Exchange believes that its fees and credits are competitive with those charged by other venues and that the various changes it has proposed to reduce its fees will benefit Members both due to the obvious economic savings and due to the potential of increased available liquidity at the Exchange. For those proposed changes that will result in increased fees charged to Members or lower rebates received by Members, such as the reduction of the rebate in Tape A and C securities, the Exchange believes that any additional revenue it receives will allow the Exchange to devote additional capital to its operations, which may, in turn, benefit Members of the Exchange. Finally, the Exchange believes that the proposed rates are equitable in that they apply uniformly to all Members.

(B) Self-Regulatory Organization's Statement of Burden on Competition

The Exchange does not believe that the proposed rule change imposes any burden on competition.

(C) Self-Regulatory Organization's Statement on Comments Regarding the Proposed Rule Change Received From Members, Participants or Others

No written comments were solicited or received.

III. Date of Effectiveness of the Proposed Rule Change and Timing for Commission Action

The foregoing proposed rule change has been designated as a fee change pursuant to Section 19(b)(3)(A)(ii) of the Act[9] and Rule 19b–4(f)(2) thereunder,[10] because it establishes or changes a due, fee or other charge imposed on members by the Exchange. Accordingly, the proposal is effective upon filing with the Commission.

At any time within 60 days of the filing of the proposed rule change, the Commission may summarily abrogate such rule change if it appears to the Commission that such action is necessary or appropriate in the public interest, for the protection of investors, or otherwise in furtherance of the purposes of the Act.

IV. Solicitation of Comments

Interested persons are invited to submit written data, views and arguments concerning the foregoing, including whether the proposal is consistent with the Act. Comments may be submitted by any of the following methods:

Electronic Comments

- Use the Commission's Internet comment form (*http://www.sec.gov/rules/sro.shtml*); or
- Send an e-mail to *rule-comments@sec.gov*. Please include File No. SR–BATS–-2009–008 on the subject line.

Paper Comments

- Send paper comments in triplicate to Elizabeth M. Murphy, Secretary, Securities and Exchange Commission, 100 F Street, NE., Washington, DC 20549–1090.

All submissions should refer to File No. SR–BATS–2009–008. This file number should be included on the subject line if e-mail is used. To help the Commission process and review your comments more efficiently, please use only one method. The Commission will post all comments on the Commission's Internet Web site (*http://www.sec.gov/rules/sro.shtml*). Copies of the submission, all subsequent amendments, all written statements with respect to the proposed rule change that are filed with the Commission, and all written communications relating to the proposed rule changes between the Commission and any person, other than those that may be withheld from the public in accordance with the provisions of 5 U.S.C. 552, will be available for inspection and copying in the Commission's Public Reference Room, 100 F Street, NE., Washington, DC 20549, on official business days between the hours of 10 a.m. and 3 p.m. Copies of such filing also will be available for inspection and copying at the principal office of BATS. All comments received will be posted without change; the Commission does not edit personal identifying information from submissions. You should submit only information that you wish to make available publicly. All submissions should refer to File No. SR–BATS–2009–008 and should be submitted on or before May 4, 2009.

For the Commission, by the Division of Trading and Markets, pursuant to delegated authority.[11]

Florence E. Harmon,

Deputy Secretary.

[FR Doc. E9–8323 Filed 4–10–09; 8:45 am]

BILLING CODE 8010–01–P

[7] 15 U.S.C. 78f.

[8] 15 U.S.C. 78f(b)(4).

[9] 15 U.S.C. 78s(b)(3)(A)(ii).

[10] 17 CFR 240.19b–4(f)(6) [sic].

[11] 17 CFR 200.30–3(a)(12).

SECURITIES AND EXCHANGE COMMISSION

[Release No. 34–59708; File No. SR–NYSEArca–2009–12]

Self-Regulatory Organizations; NYSE Arca, Inc.; Order Approving Proposed Rule Change Relating to SPDR Barclays Capital Convertible Bond ETF

April 6, 2009.

I. Introduction

On February 18, 2009, NYSE Arca, Inc. (''Exchange'' or ''NYSE Arca''), through its wholly owned subsidiary, NYSE Arca Equities, Inc. (''NYSE Arca Equities''), filed with the Securities and Exchange Commission (''Commission'') pursuant to Section 19(b)(1) of the Securities Exchange Act of 1934 (''Act'')[1] and Rule 19b–4 thereunder,[2] a proposed rule change to list and trade shares (''Shares'') of the SPDR® Barclays Capital Convertible Bond ETF. The proposed rule change was published for comment in the **Federal Register** on March 6, 2009.[3] The Commission received no comment letters on the proposed rule change. This order approves the proposed rule change.

II. Description of the Proposed Rule Change

The Exchange proposes to list and trade the SPDR® Barclays Capital Convertible Bond ETF (''Fund'')[4] under NYSE Arca Equities Rule 5.2(j)(3), the Exchange's listing standards for Investment Company Units (''Units'').[5]

[1] 15 U.S.C. 78s(b)(1).

[2] 17 CFR 240.19b–4.

[3] *See* Securities Exchange Act Release No. 59459 (February 26, 2009), 74 FR 9860 (''Notice'').

[4] *See* the Registration Statement on Form N–1A of the SPDR Series Trust, dated January 15, 2009 (File Nos. 333–57793 and 811–08839) (''Registration Statement'').

[5] An Investment Company Unit is a security that represents an interest in a registered investment company that holds securities comprising, or otherwise based on or representing an interest in, an index or portfolio of securities (or holds securities in another registered investment

Continued

The Fund's investment objective is to provide investment results that, before fees and expenses, correspond generally to the price and yield performance of the Barclays Capital U.S. Convertible Bond $500MM Index (''Index''), which aims to track the performance of the U.S. dollar-denominated convertibles markets with outstanding issue sizes greater than $500 million. The Index includes the following major classes of convertible securities—cash pay bonds, zero-coupon/Original Issue Discount bonds, preferred securities, and mandatories.

The Index includes both U.S. convertible bonds and convertible preferred equity securities.[6] The Index components consisting of U.S. convertible bonds separately meet the criteria set forth in Commentary .02(a) of Rule 5.2(j)(3) applicable to Units based on a fixed income index or portfolio. However, the Index components consisting of convertible preferred stocks do not separately meet the criteria set forth in Commentary .01(a) of Rule 5.2(j)(3) applicable to Units based on U.S. indexes or portfolios.

The Exchange represents that: (i) except for Commentaries .01(a)(A)(2)[7] and .01(a)(A)(5)[8] to NYSE Arca Equities Rule 5.2(j)(3), the Shares currently satisfy all other of the generic listing standards under the rule; (ii) the continued listing standards under NYSE Arca Equities Rules 5.2(j)(3) and 5.5(g)(2) applicable to Units shall apply to the Shares; and (iii) the Trust is required to comply with Rule 10A–3[9] under the Act for the initial and continued listing of the Shares. Additionally, the Exchange represents that the Shares will comply with all other requirements applicable to Units including, but not limited to, requirements relating to the dissemination of key information such as the Index value and Intraday Indicative Value, rules governing the trading of equity securities, trading hours, trading halts, surveillance, firewalls and Information Bulletins to ETP Holders, as set forth in prior Commission orders approving the generic listing rules applicable to the listing and trading of Units.[10] Detailed descriptions of the Fund, the Underlying Index, procedures for creating and redeeming Shares, transaction fees and expenses, dividends, distributions, taxes, and reports to be distributed to beneficial owners of the Shares can be found in the Registration Statement or on the Web site for the Fund (*http://www.SPDRETFs.com*).[11]

III. Discussion and Commission's Findings

After careful review, the Commission finds that NYSE Arca's proposal to list and trade the Shares is consistent with the Act and the rules and regulations thereunder applicable to a national securities exchange.[12] In particular, the Commission finds that the proposed rule change is consistent with Section 6(b)(5) of the Act,[13] in that it is designed to prevent fraudulent and manipulative acts and practices, to promote just and equitable principles of trade, to foster cooperation and coordination with persons engaged in facilitating transactions in securities, to remove impediments to and perfect the mechanism of a free and open market and a national market system, and, in general, to protect investors and the public interest.

NYSE Arca Equities Rule 5.2(j)(3) permits the Exchange to consider qualifying Units for listing and trading pursuant to Rule 19b–4(e) under the Act. The Shares, however, do not qualify for generic listing under the Exchange's rule because, although the Index components consisting of U.S. convertible bonds separately meet the criteria set forth in Commentary .02(a) of Rule 5.2(j)(3) applicable to Units based on a fixed income index or portfolio, the Index components consisting of convertible preferred stocks do not separately meet the criteria set forth in Commentaries .01(a)(A)(2) and .01(a)(A)(5) of the rule applicable to Units based on U.S. indexes or portfolios.[14]

The Commission believes that the listing and trading of the Shares is consistent with the Act. The Shares currently satisfy all but two of the generic listing standards under the rule, and the Commission believes that the composition of the Index, despite failing to satisfy the requirements of Commentaries .01(a)(A)(2) and .01(a)(A)(5) to NYSE Arca Equities Rule 5.2(j)(3), does not raise any regulatory concerns. Additionally, the continued listing standards under NYSE Arca Equities Rules 5.2(j)(3) and 5.5(g)(2) applicable to Units will apply to the Shares, and the Trust is required to comply with Rule 10A–3[15] under the Act for the initial and continued listing of the Shares. Finally, the Commission notes that it has not received any comments regarding the proposed rule change.

IV. Conclusion

For the foregoing reasons, the Commission believes that the Exchange's proposal to list and trade the Shares is consistent with the Act. This order is based on the Exchange's representations.

It is therefore ordered, pursuant to Section 19(b)(2) of the Act,[16] that the proposed rule change (SR–NYSEArca–2009–12) be, and it hereby is, approved.

company that holds securities comprising, or otherwise based on or representing an interest in, an index or portfolio of securities). *See* NYSE Arca Equities Rule 5.2(j)(3)(A).

[6] Commentary .03 to Rule 5.2(j)(3) provides that the Corporation may list a series of Units based on a combination of indexes or a portfolio of component securities representing the U.S. or domestic equity market, the international equity market, and the fixed income market for listing and trading pursuant to Rule 19b–4(e) under the Act provided each index or portfolio of equity and fixed income component securities separately meet either the criteria set forth in Commentary .01(a) of Rule 5.2(j)(3) (applicable to Units based on U.S., international or global equity indexes or portfolios) or Commentary .02(a) (applicable to Units based on a fixed income index or portfolio).

[7] Commentary .01(a)(A)(2) to NYSE Arca Equities Rule 5.2(j)(3) provides that component stocks that in the aggregate account for at least 90% of the weight of the index or portfolio each shall have a minimum worldwide monthly trading volume during each of the last six months of at least 250,000 shares. According to the Exchange, the Index does not meet the requirements of Commentary .01(a)(A)(2) in that convertible preferred stocks accounting for 78.56% of the weight of the convertible preferred portion of the Index each had a minimum worldwide monthly trading volume during each of the last six months of at least 250,000 shares, as of November 30, 2008.

[8] Commentary .01(a)(A)(5) to NYSE Arca Equities Rule 5.2(j)(3) provides that all securities in the Index or portfolio shall be US Component Stocks, as defined in Rule 5.2(j)(3) listed on a national securities exchange and shall be NMS Stocks as defined in Rule 600 of Regulation NMS under the Act. The Exchange states that, while the Index does not include any non-U.S. securities, as of November 30, 2008, six of the 31 convertible preferred securities in the Index, accounting for 8% of the Index weight, were not listed on a national securities exchange; those issues were traded over-the-counter.

[9] 17 CFR 240.10A–3.

[10] *See, e.g.,* Securities Exchange Act Release Nos. 55783 (May 17, 2007), 72 FR 29194 (May 24, 2007) (SR–NYSEArca–2007–36) (order approving generic listing standards for Units based on fixed income indexes); 44551 (July 12, 2001), 66 FR 37716 (July 19, 2001) (SR–PCX–2001–14) (order approving generic listing standards for Units and Portfolio Depositary Receipts); and 41983 (October 6, 1999), 64 FR 56008 (October 15, 1999) (SR–PCX–98–29) (order approving rules for listing and trading of Units).

[11] *See also* Notice, *supra,* note 3.

[12] In approving this proposed rule change, the Commission has considered the proposed rule's impact on efficiency, competition, and capital formation. *See* 15 U.S.C. 78c(f).

[13] 15 U.S.C. 78f(b)(5).

[14] *See* notes 7 and 8, *supra.*

[15] 17 CFR 240.10A–3.

[16] 15 U.S.C. 78s(b)(1).

For the Commission, by the Division of Trading and Markets, pursuant to delegated authority.[17]

Florence E. Harmon,

Deputy Secretary.

[FR Doc. E9–8326 Filed 4–10–09; 8:45 am]

BILLING CODE 8010–01–P

SECURITIES AND EXCHANGE COMMISSION

[Release No. 34–59706; File No. SR–NASDAQ–2009–029]

Self-Regulatory Organizations; The NASDAQ Stock Market LLC; Notice of Filing and Immediate Effectiveness of Proposed Rule Change To Modify Fees for Members Using the NASDAQ Market Center

April 6, 2009.

Pursuant to Section 19(b)(1) of the Securities Exchange Act of 1934 (''Act''),[1] and Rule 19b–4 thereunder,[2] notice is hereby given that on March 25, 2009, The NASDAQ Stock Market LLC (''NASDAQ'') filed with the Securities and Exchange Commission (''Commission'') the proposed rule change as described in Items I, II, and III below, which Items have been prepared by NASDAQ. Pursuant to Section 19(b)(3)(A)(ii) of the Act[3] and Rule 19b–4(f)(2) thereunder,[4] NASDAQ has designated this proposal as establishing or changing a due, fee, or other charge, which renders the proposed rule change effective upon filing.

The Commission is publishing this notice to solicit comments on the proposed rule change from interested persons.

I. Self-Regulatory Organization's Statement of the Terms of Substance of the Proposed Rule Change

NASDAQ proposes to modify pricing for NASDAQ members using the Nasdaq Market Center. NASDAQ will implement this rule change on April 1, 2009. The text of the proposed rule change is available at *http://nasdaqomx.cchwallstreet.com/*, at NASDAQ's principal office, and at the Commission's Public Reference Room.

II. Self-Regulatory Organization's Statement of the Purpose of, and Statutory Basis for, the Proposed Rule Change

In its filing with the Commission, NASDAQ included statements concerning the purpose of and basis for the proposed rule change and discussed any comments it received on the proposed rule change. The text of these statements may be examined at the places specified in Item IV below. NASDAQ has prepared summaries, set forth in Sections A, B, and C below, of the most significant aspects of such statements.

A. Self-Regulatory Organization's Statement of the Purpose of, and Statutory Basis for, the Proposed Rule Change

1. Purpose

NASDAQ is proposing to modify its pricing for order execution and routing. As detailed below, the effect of the fee changes varies with respect to the listing venue of the securities being traded and whether a member is accessing or providing liquidity or routing an order.

Execution of Orders for Securities Listed on NASDAQ or the New York Stock Exchange (''NYSE''); Routing of Orders for Securities Listed on NASDAQ or NYSE to Venues Other Than NYSE; Routing of Orders for Exchange-Traded Funds (''ETFs'') to NYSE

NASDAQ is reducing fees to access liquidity in securities listed on NASDAQ and NYSE by reducing the levels of market activity at which members qualify for reduced pricing and by reducing the fees charged to these qualifying members. Specifically, NASDAQ is introducing a new pricing tier for members with an average daily volume through the Nasdaq Market Center in all securities of (i) more than 50 million shares of liquidity provided, and (ii) more than 60 million shares of liquidity accessed and/or routed.[5] Members qualifying for this tier will pay $0.0026 per share executed when accessing liquidity (or 0.1% of the total transaction cost in the case of executions of securities priced at less than $1 per share). A second pricing tier will apply to members with an average daily volume through the Nasdaq Market Center in all securities of (i) more than 25 million shares of liquidity provided, and (ii) more than 40 million shares of liquidity accessed and/or routed. Members qualifying for this tier will pay $0.0028 per share executed when accessing liquidity (or 0.1% of the total transaction cost in the case of executions at less than $1 per share). By contrast, under the current pricing schedule, a member must have an average daily volume of (i) more than 35 million shares of liquidity provided and (ii) more than 55 million shares of liquidity accessed and/or routed in order to qualify for a fee to access liquidity of $0.0029. Thus, under the change, favorable pricing becomes available at lower levels of liquidity provision (25 million shares versus 35 million shares) and routing and/or accessing (40 million shares versus 55 million shares), and the reduced fees are themselves lower ($0.0026 or $0.0028 per share executed, versus $0.0029 per share executed). However, in order to simplify its schedule, NASDAQ is eliminating a reduced fee of $0.00295 per share executed for members that access a daily average of more than 55 million shares of liquidity during a month but that do not otherwise qualify for a lower rate. As is currently the case, members not qualifying for a reduced pricing tier will pay $0.0030 per share executed to access liquidity (or 0.1% of the total transaction cost in the case of executions at less than $1 per share).

NASDAQ is also instituting changes with respect to fees for routing orders that attempt to execute in the Nasdaq Market Center for the full size of the order before routing. These routing changes apply to orders in NASDAQ-listed securities, orders in NYSE-listed securities routed to venues other than NYSE, and routing of orders for ETFs to NYSE. With respect to such activity, NASDAQ is eliminating volume-based tiers, with fees that currently range from $0.0029 to $0.003, and instituting a lower fee of $0.0026 available to all members.[6] Fees for routing orders that do not check the Nasdaq Market Center for the full size of the order before routing remain unchanged, except with respect to orders in securities that are priced at $1 or more per share and listed on NASDAQ or NYSE, where the order is directed to NASDAQ OMX BX (''BX''). For securities listed on NASDAQ or NYSE, BX is replacing its fee to access liquidity with a credit of $0.0006.[7] Because that credit is designed to encourage direct use of BX by its members, NASDAQ will not be passing on the credit to NASDAQ members that use its routing facility to access BX. Nevertheless, NASDAQ believes that the change in BX pricing warrants eliminating the fee for routing orders to BX in circumstances where NASDAQ members choose to direct orders to BX. Similarly, NASDAQ is

[17] 17 CFR 200.30–3(a)(12).

[1] 15 U.S.C. 78s(b)(1).

[2] 17 CFR 240.19b–4.

[3] 15 U.S.C. 78s(b)(3)(A)(ii).

[4] 17 CFR 240.19b–4(f)(2).

[5] As is currently the case with respect to reduced pricing tiers, orders that do not attempt to execute in the Nasdaq Market Center for the full size of the order prior to routing are not counted in determining shares of liquidity routed.

[6] The fee remains 0.3% of the total transaction cost in the case of securities priced at less than $1 per share.

[7] SR–BX–2009–018 (March 25, 2009).

eliminating the fee to route orders to BX if the orders check the Nasdaq Market Center book for the full size of the order prior to routing but are designated by the market participant as not eligible for posting to the Nasdaq Market Center book after routing. This would occur in circumstances where a market participant wishes to route an order to NYSE or NYSEAlternext for posting but specifies that the order should check the Nasdaq Market Center and BX books before being routed to the destination market.

To offset the reduction in fees to access and route liquidity, NASDAQ is decreasing the overall credits it pays to liquidity providers. Currently, members qualify for the most favorable credit tier if they provide an average daily volume during the month of more than 35 million shares of liquidity: members in this tier receive $0.0015 per share of liquidity provided in the case of non-displayed quotes/orders, and $0.0028 per share of liquidity provided in the case of displayed quotes/orders.[8] Under the revised fees, a member must provide more than 50 million shares of liquidity to qualify for the most favorable pricing tier, and the credit for displayed liquidity will be reduced to $0.0025 per share, with the credit for non-displayed liquidity remaining at $0.0015 per share. The next most favorable tier currently requires providing more than 20 million shares of liquidity: the credit for non-displayed liquidity is $0.001 per share, and the credit for displayed liquidity is $0.0025. Under the revised pricing schedule, a member must provide a daily average of more than 25 million shares of liquidity, and the credit for displayed liquidity will be reduced to $0.0022 per share, with the credit for non-displayed liquidity remaining $0.001 per share. Members not qualifying for these pricing tiers will continue to receive $0.001 per share for non-displayed liquidity and $0.002 per share for displayed liquidity.

Finally, NASDAQ is deleting obsolete fee language regarding a surcharge for orders routed to the American Stock Exchange and charged a fee by the specialist. Specialists at NYSEAlternext (formerly the American Stock Exchange) no longer charge this fee.

Execution and Routing of Orders for Securities Listed on Exchanges Other Than NASDAQ or NYSE

With respect to securities listed on exchanges other than NASDAQ or NYSE, NASDAQ is modifying the levels of activity required to qualify for favorable pricing tiers, but is not modifying the level of charges and credits associated with tiers. Thus, in order to qualify for the most favorable fee to access and route liquidity, a member must (i) provide more than 50 million shares of liquidity (currently 35 million) and (ii) access or route more than 60 million shares of liquidity (currently 55 million). Members qualifying for this tier currently pay $0.0029 per share executed to access liquidity or to route after attempting to execute for the full size of the order, and this fee will remain unchanged.[9] As is the case with executions of NASDAQ- and NYSE-listed securities, NASDAQ is eliminating a reduced fee of $0.00295 per share executed for members that access a daily average of more than 55 million shares of liquidity during a month. Members not qualifying for a reduced pricing tier will continue to pay $0.0030 per share executed to access liquidity and to route after checking the Nasdaq Market Center book for the full size of the order.

The level of credits for providing liquidity to support executions of securities listed on exchanges other than NASDAQ and NYSE will remain unchanged, but the volume levels required to qualify for favorable credits will increase. Thus, in order to qualify for the most favorable credit, a member must provide an average daily volume of more than 50 million shares of liquidity (currently 35 million): the most favorable credit will remain $0.0015 for non-displayed liquidity and $0.0028 for displayed liquidity. To qualify for the next most favorable credit, a member must provide a daily average volume of more than 25 million shares of liquidity (currently 20 million): members is this tier receive $0.001 per share for non-displayed liquidity and $0.0025 per share for displayed liquidity. Other members will continue to receive $0.001 per share for non-displayed liquidity and $0.002 per share for displayed liquidity.[10]

Because BX is maintaining a fee of $0.0014 per share executed for orders that access liquidity in securities listed on exchanges other than NASDAQ and NYSE,[11] NASDAQ is maintaining its current fee of $0.0016 per share executed for directed orders routed to BX. NASDAQ is, however, lowering the fee to route orders for such securities to BX if the orders check the Nasdaq Market Center book for the full size of the order prior to routing but are not designated as eligible for posting to the Nasdaq Market Center book after routing. The new fee for such orders will be $0.0016 per share, rather than the current fee of $0.0029 or $0.0030.

Finally, NASDAQ is deleting obsolete fee language regarding a surcharge for orders routed to the American Stock Exchange and charged a fee by the specialist. Specialists at NYSEAlternext (formerly the American Stock Exchange) no longer charge this fee.

Fees for Routing of Securities Other Than Exchange-Traded Funds to NYSE

With respect to fees for routing orders for securities other than ETFs to NYSE, NASDAQ is modifying the volume level required to qualify for a reduced routing fee. Currently, members with an average daily volume of more than 35 million shares of liquidity provided pay a fee of $0.0019 per share when routing an order to NYSE that does not attempt to execute in the Nasdaq Market Center prior to routing and that is not designated as an Intermarket Sweep Order.[12] Members with a lower volume of liquidity provision pay $0.0020 per share when routing such orders. The volume of liquidity provision required to receive the reduced routing rate is being raised to an average daily volume of 50 million shares of liquidity provided.

For orders that execute at NYSE as an odd lot (including the odd lot portion of a partial round lot orders), NASDAQ will charge a fee of $0.0005 (rather than $0.001) to reflect a recent fee change by NYSE.[13] In addition, in March 2009, NASDAQ instituted a per order fee for round lot or mixed lot orders that are designated only to remove liquidity from the NASDAQ book prior to routing to NYSE (''DOTI Orders''). The fee, which is designed to discourage inefficient use of DOTI Orders that do not result in executions, applies if a member sends an average of more than 10,000 DOTI Orders per day during the month and its ratio of DOTI Orders to executions exceeds 300 to 1. NASDAQ is modifying this fee to exclude from the calculation of a member's DOTI Orders during the month the day with the

[8] All credits described relate to executions of securities priced at $1 or more per share. Both before and after implementation of the proposed rule change, the credit with respect to executions of securities priced at less than $1 per share is $0.

[9] For securities priced under $1, the fee to access liquidity remains 0.1% of the total transaction cost, and the fee to route remains 0.3% of the total transaction cost.

[10] In all cases, no credit is paid with respect to securities priced at less than $1 per share.

[11] SR–BX–2009–018 (March 25, 2009).

[12] The fee is $0.0020 for Intermarket Sweep Orders and for orders that attempt to execute solely against displayed interest prior to routing. Orders that attempt to execute for the full size of the order prior to routing pay $0.0018 per share if they access liquidity at NYSE or receive a credit for $0.0010 per share if they add liquidity at NYSE.

[13] Securities Exchange Act Release No. 59483 (March 2, 2009), 74 FR 10328 (March 10, 2009) (SR–NYSE–2009–22).

single highest ratio of DOTI Orders to executions. Because the purpose of the new fee is to discourage persistently inefficient use of DOTI Orders, the change will exclude from the calculation an ''outlier'' day that may occur due to unusual conditions on a particular day. This will help to guard against the possibility that a member that is a high volume user of DOTI Orders may be assessed the per order charge merely due to one day on which its volume of DOTI Orders is disproportionate to executions.

Recent widespread reductions in the quoted prices of cash equities have increased the relative costs of accessing liquidity by making bid-ask spreads account for a greater percentage of that cost. Accordingly, NASDAQ believes that its members have become more focused than ever on paying the lowest possible cost when accessing liquidity. The proposed changes to fees for execution and routing of orders for securities listed on NASDAQ or NYSE are designed to respond to this trend by significantly reducing the cost to access liquidity (and to route, when liquidity must be sought on other venues). To ensure that the changes do not unduly impact NASDAQ's revenues, they are being partially offset by increasing the volume levels required to qualify for favorable liquidity provider credits, favorable fees to access liquidity in securities listed on venues other than NASDAQ or NYSE, and favorable fees for routing certain types of orders to NYSE.

2. Statutory Basis

NASDAQ believes that the proposed rule change is consistent with the provisions of Section 6 of the Act,[14] in general, and with Section 6(b)(4) of the Act,[15] in particular, in that it provides for the equitable allocation of reasonable dues, fees and other charges among members and issuers and other persons using any facility or system which NASDAQ operates or controls. The proposed fee change applies uniformly to all NASDAQ members. The impact of the changes upon the net fees paid by a particular market participant will depend upon a number of variables, including its monthly volume, the order types it uses, the prices of its quotes and orders (*i.e.*, its propensity to add or remove liquidity), and the listing venue for the securities that it trades. NASDAQ notes that it operates in a highly competitive market in which market participants can readily direct order flow to competing venues if they deem fee levels at a particular venue to be excessive. The proposed rule change reflects a significant reduction in the fees charged by NASDAQ to route orders and access liquidity with respect to securities listed on NASDAQ or NYSE. Although this reduction is partially offset by (i) reductions in the overall level of credits paid to liquidity providers, (ii) increases in the overall fees charged to route or access liquidity with respect to securities not listed on NASDAQ or NYSE and (iii) increases in the overall fees charged to route certain orders to NYSE, Nasdaq believes that the applicable fees and credits remain competitive with those charged by other venues and therefore continue to be reasonable and equitably allocated to those members that opt to direct orders to NASDAQ rather than competing venues.

B. Self-Regulatory Organization's Statement on Burden on Competition

NASDAQ does not believe that the proposed rule change will result in any burden on competition that is not necessary or appropriate in furtherance of the purposes of the Act, as amended.

C. Self-Regulatory Organization's Statement on Comments on the Proposed Rule Change Received From Members, Participants, or Others

Written comments were neither solicited nor received.

III. Date of Effectiveness of the Proposed Rule Change and Timing for Commission Action

The foregoing rule change has become effective pursuant to Section 19(b)(3)(A)(ii) of the Act[16] and subparagraph (f)(2) of Rule 19b–4 thereunder.[17] At any time within 60 days of the filing of the proposed rule change, the Commission may summarily abrogate such rule change if it appears to the Commission that such action is necessary or appropriate in the public interest, for the protection of investors, or otherwise in furtherance of the purposes of the Act.

IV. Solicitation of Comments

Interested persons are invited to submit written data, views, and arguments concerning the foregoing, including whether the proposed rule change is consistent with the Act. Comments may be submitted by any of the following methods:

Electronic Comments

- Use the Commission's Internet comment form (*http://www.sec.gov/rules/sro.shtml*); or
- Send an e-mail to *rule-comments@sec.gov*. Please include File Number SR–NASDAQ–2009–029 on the subject line.

Paper Comments

- Send paper comments in triplicate to Elizabeth M. Murphy, Secretary, Securities and Exchange Commission, 100 F Street, NE., Washington, DC 20549–1090.

All submissions should refer to File Number SR–NASDAQ–2009–029. This file number should be included on the subject line if e-mail is used. To help the Commission process and review your comments more efficiently, please use only one method. The Commission will post all comments on the Commission's Internet Web site (*http://www.sec.gov/rules/sro.shtml*). Copies of the submission, all subsequent amendments, all written statements with respect to the proposed rule change that are filed with the Commission, and all written communications relating to the proposed rule change between the Commission and any person, other than those that may be withheld from the public in accordance with the provisions of 5 U.S.C. 552, will be available for inspection and copying in the Commission's Public Reference Room, 100 F Street, NE., Washington, DC 20549, on official business days between the hours of 10 a.m. and 3 p.m. Copies of the filing will also be available for inspection and copying at the principal office of the self-regulatory organization. All comments received will be posted without change; the Commission does not edit personal identifying information from submissions. You should submit only information that you wish to make available publicly. All submissions should refer to File Number SR–NASDAQ–2009–029 and should be submitted on or before May 4, 2009.

For the Commission, by the Division of Trading and Markets, pursuant to delegated authority.[18]

Florence E. Harmon,

Deputy Secretary.

[FR Doc. E9–8325 Filed 4–10–09; 8:45 am]

BILLING CODE 8010–01–P

[14] 15 U.S.C. 78f.

[15] 15 U.S.C. 78f(b)(4).

[16] 15 U.S.C. 78s(b)(3)(a)(ii) [sic].

[17] 17 CFR 240.19b–4(f)(2).

[18] 17 CFR 200.30–3(a)(12).

SECURITIES AND EXCHANGE COMMISSION

[Release No. 34–59705; File No. SR–Phlx–2009–28]

Self-Regulatory Organizations; NASDAQ OMX PHLX, Inc.; Notice of Filing and Immediate Effectiveness of Proposed Rule Change Relating to the Option Floor Broker Subsidy

April 3, 2009.

Pursuant to Section 19(b)(1) of the Securities Exchange Act of 1934 (''Act''),[1] and Rule 19b–4 thereunder,[2] notice is hereby given that on March 26, 2009, NASDAQ OMX PHLX, Inc. (''Phlx'' or ''Exchange'') filed with the Securities and Exchange Commission (''SEC'' or ''Commission'') the proposed rule change as described in Items I, II, and III, below, which Items have been prepared by the Exchange. The Commission is publishing this notice to solicit comments on the proposed rule change from interested persons.

I. Self-Regulatory Organization's Statement of the Terms of Substance of the Proposed Rule Change

The Exchange proposes to amend the threshold volume requirements related to the Options Floor Broker Subsidy and amend the Per Contract Average Daily Volume Subsidy Payment from a five tiered structure to a three tiered structure.

While changes to the Exchange's fee schedule pursuant to this proposal are effective upon filing, the Exchange has designated this proposal to be effective for trades settling on or after April 1, 2009.

The text of the proposed rule change is available on the Exchange's Web site at *http://nasdaqomxphlx.cchwallstreet.com/NASDAQOMXPHLX/Filings/*, at the principal office of the Exchange, and at the Commission's Public Reference Room.

II. Self-Regulatory Organization's Statement of the Purpose of, and Statutory Basis for, the Proposed Rule Change

In its filing with the Commission, the Exchange included statements concerning the purpose of and basis for the proposed rule change and discussed any comments it received on the proposed rule change. The text of these statements may be examined at the places specified in Item IV below. The Exchange has prepared summaries, set forth in sections A, B, and C below, of the most significant aspects of such statements.

A. Self-Regulatory Organization's Statement of the Purpose of, and Statutory Basis for, the Proposed Rule Change

1. Purpose

The purpose of the proposed rule change is to increase the threshold volume requirements related to the Options Floor Broker Subsidy and simplify the current tiered fee structure for the Options Floor Broker Subsidy Per Contract Average Daily Volume Subsidy Payment by reducing the number of tiers. The Exchange believes the proposed tier structure is more aligned with existing average daily volumes and that increasing the threshold volume requirement and compressing the tiers is necessary to continue to attract additional floor brokerage business to the Exchange.

The Exchange currently pays an Options Floor Broker Subsidy to member organizations with Exchange registered floor brokers for eligible contracts that are entered into the Exchange's Floor Broker Management System (''FBMS'').[3] To qualify for the per contract subsidy, a member organization with Exchange registered floor brokers must have: (1) More than an average of 75,000 executed contracts per day in the applicable month; and (2) at least 40,000 executed contracts or more per day for at least eight trading days during that same month.[4] Only the floor broker volume from orders entered into FBMS and subsequently executed on the Exchange would be counted. The 75,000 contract and 40,000 contract thresholds, as described above, would be calculated per member organization floor brokerage unit. In the event that two or more member organizations with Exchange registered floor brokers each entered one side of a transaction into FBMS, then the executed contracts would be divided among each qualifying member organization that participates in that transaction.[5]

The Exchange proposes amending the threshold volume requirements related to the Option Floor Broker Subsidy so that in order to qualify for the per contract subsidy a member organization with Exchange registered floor brokers must have more than an average of 100,000, instead of 75,000, executed contracts per day in the applicable month.[6] The Exchange also proposes amending the current five tiered Per Contract Average Daily Volume Subsidy Payment to a three tiered structure. Currently, in order to be eligible for the Options Floor Broker Subsidy, the member organization must have an average daily volume in a particular calendar month as follows:

PER CONTRACT AVERAGE DAILY VOLUME SUBSIDY PAYMENT

Tier I	Tier II	Tier III	Tier IV	Tier V
75,001 to 100,000	100,001 to 200,000	200,001 to 300,000	300,001 to 400,000	400,001 and greater.
$0.01 per contract	$0.04 per contract	$0.05 per contract	$0.06 per contract	$0.07 per contract.

[1] 15 U.S.C. 78s(b)(1).

[2] 17 CFR 240.19b–4.

[3] FBMS is designed to enable floor brokers and/or their employees to enter, route, and report transactions stemming from options orders received on the Exchange. FBMS also is designed to establish an electronic audit trail for options orders represented and executed by floor brokers on the Exchange. *See* Exchange Rule 1080, commentary .06.

[4] For purposes of calculating the 75,000 and 40,000 thresholds, customer-to-customer transactions, customer-to-non-customer transactions, and non-customer-to-non-customer transactions would be included.

[5] Customer-to-customer transactions would count towards reaching the 75,000 contract and 40,000 contract thresholds, but a per contract subsidy would not be paid on any customer-to-customer transactions. Dividend, merger and short stock interest strategies would be excluded from all threshold volume calculations, and no per contract subsidy would be paid on these transactions. The per contract subsidy would be paid based on the average daily contract volume for that month, which are customer-to-non-customer transactions and are in excess of 75,000 contracts. Payments would be made at the stated rate for each tier for those contracts that fall within that tier. These contracts may include customer-to-customer transactions for the purposes of reaching a tier, but as stated above, a per contract subsidy would not be paid on these executions. When computing the threshold amounts, the Exchange intends to first count all customer-to-customer transactions and then all other customer-to-non-customer transactions. *See also* Securities Exchange Act Release No. 57253 (February 1, 2008), 73 FR 7352 (February 7, 2008) (SR–Phlx–2008–08) (adopting a tiered per contract floor broker options subsidy payable to member organization with Exchange registered floor brokers).

[6] The second of the two threshold volume requirements, ''* * * at least 400,000 [sic] executed contracts or more per day for at least eight trading days during that same month'', would remain the same.

The Exchange proposes a three tiered structure where to be eligible for the Options Floor Broker Subsidy, the member organization must have an average daily volume in a particular calendar month as follows:

PER CONTRACT AVERAGE DAILY VOLUME SUBSIDY PAYMENT

Tier I	Tier III [sic]	Tier IV [sic]
100,001 to 200,000 ..... $0.04 per contract	200,001 to 300,000 ..... $0.05 per contract	300,001 and greater. $0.06 per contract.

In connection with increasing the threshold volume requirements, the Exchange proposes increasing the corresponding eligible contract requirements to reflect the increase from 75,000 to 100,000 for average executed contracts per day in the applicable month as follows:

• Customer-to-customer executions will count towards reaching the 100,000 contract and 40,000 contract thresholds, but a per contract subsidy will not be paid on any customer-to-customer executions.

• Orders entered through FBMS but executed away through Linkage, as well as dividend, merger and short stock interest strategies will not count towards the 100,000 contract or the 40,000 contract thresholds nor will a per contract subsidy be paid on these transactions.

• Only the largest component of a Complex Order (i.e., the component that includes the greatest number of contracts) will count towards the 100,000 contract and the 40,000 contract thresholds. The Options Floor Broker Subsidy does not apply to any contracts that are executed as part of a Complex Order.

Similarly, the Exchange proposes to amend the fee schedule to note that ''[t]he per contract subsidy would be paid based on the average daily contract volume on customer-to-non-customer as well as non-customer-to-non-customer transactions for that month in excess of 100,000 contracts'' instead of 75,000 as currently stated.

2. Statutory Basis

The Exchange believes that its proposal to amend its schedule of fees is consistent with Section 6(b) of the Act [7] in general, and furthers the objectives of Section 6(b)(4) of the Act [8] in particular, in that it is an equitable allocation of reasonable fees and other charges among Exchange members. Pursuant to this proposal, all member organizations with Exchange registered floor brokers are offered the continued opportunity to receive a subsidy. By allowing for a subsidy, the Exchange believes that floor brokers will be encouraged to send additional orders to the Exchange for execution.

B. Self-Regulatory Organization's Statement on Burden on Competition

The Exchange does not believe that the proposed rule change will impose any burden on competition not necessary or appropriate in furtherance of the purposes of the Act.

C. Self-Regulatory Organization's Statement on Comments on the Proposed Rule Change Received From Members, Participants or Others

No written comments were either solicited or received.

III. Date of Effectiveness of the Proposed Rule Change and Timing for Commission Action

The foregoing rule change has become effective pursuant to Section 19(b)(3)(A)(ii) of the Act [9] and paragraph (f)(2) of Rule 19b–4 [10] thereunder. At any time within 60 days of the filing of the proposed rule change, the Commission may summarily abrogate such rule change if it appears to the Commission that such action is necessary or appropriate in the public interest, for the protection of investors, or otherwise in furtherance of the purposes of the Act.

IV. Solicitation of Comments

Interested persons are invited to submit written data, views, and arguments concerning the foregoing, including whether the proposed rule change is consistent with the Act. Comments may be submitted by any of the following methods:

Electronic Comments

• Use the Commission's Internet comment form (*http://www.sec.gov/rules/sro.shtml*); or

• Send an e-mail to *rule-comments@sec.gov*. Please include File Number SR–Phlx–2009–28 on the subject line.

Paper Comments

• Send paper comments in triplicate to Elizabeth M. Murphy, Secretary, Securities and Exchange Commission, 100 F Street, NE., Washington DC 20549–1090.

All submissions should refer to File Number SR–Phlx–2009–28. This file number should be included on the subject line if e-mail is used. To help the Commission process and review your comments more efficiently, please use only one method. The Commission will post all comments on the Commission's Internet Web site (*http://www.sec.gov/rules/sro.shtml*). Copies of the submission, all subsequent amendments, all written statements with respect to the proposed rule change that are filed with the Commission, and all written communications relating to the proposed rule change between the Commission and any person, other than those that may be withheld from the public in accordance with the provisions of 5 U.S.C. 552, will be available for inspection and copying in the Commission's Public Reference Room, 100 F Street, NE., Washington, DC 20549, on official business days between the hours of 10 a.m. and 3 p.m. Copies of such filing also will be available for inspection and copying at the principal office of the Exchange. All comments received will be posted without change; the Commission does not edit personal identifying information from submissions. You should submit only information that you wish to make available publicly. All submissions should refer to File No. SR–Phlx–2009–28 and should be submitted on or before May 4, 2009.

For the Commission, by the Division of Trading and Markets, pursuant to delegated authority.[11]

Florence E. Harmon,

Deputy Secretary.

[FR Doc. E9–8324 Filed 4–10–09; 8:45 am]

BILLING CODE 8010–01–P

[7] 15 U.S.C. 78f(b).

[8] 15 U.S.C. 78f(b)(4).

[9] 15 U.S.C. 78s(b)(3)(A)(ii).

[10] 17 CFR 240.19b–4(f)(2).

[11] 17 CFR 200.30–3(a)(12).

DEPARTMENT OF STATE

[Public Notice 6549]

U.S. Department of State Advisory Committee on Private International Law: Working Group I of the United Nations Commission on International Trade Law (UNCITRAL) Model Law on Procurement of Goods, Construction and Services

A study group of the Advisory Committee reviews and provides comments on an initiative by the United Nations Commission for International Trade Law (UNCITRAL) to revise the 1994 UNCITRAL Model Law on Procurement of Goods, Construction and Services (''Model Procurement Law''), and its Guide to Enactment, available at *http://www.uncitral.org/uncitral/en/uncitral_texts/procurement_infrastructure/1994Model.html*. The UNCITRAL Model Procurement Law is not intended to be applied by the United States, but it is cited and relied upon in many other nations as a model procurement code.

The UNCITRAL Working Group tasked with making recommendations for an updated model law has focused on new practices and technological developments, in particular those resulting from the use of electronic communications in public procurement. These topics have included the use of electronic means of communication in the procurement process, publication of procurement-related information, the procurement technique known as the electronic reverse auction, abnormally low tenders, and the method of contracting known as framework agreements. The Working Group also decided that the Model Law and the Guide should take into account the question of conflicts of interest. In this regard, the United Nations Convention Against Corruption, which entered into force in December 2005, specifically calls for anti-corruption measures in procurement to address conflicts of interest. See also Report of Working Group I (Procurement A/CN.9/668) on the work of its fifteenth session (New York, 2–6 February 2009) available at *http://www.uncitral.org/uncitral/en/commission/working_groups/1Procurement.html*.

It is possible that a revised model procurement law will be presented for final review by UNCITRAL in 2009. The UNCITRAL Working Group has recommended that the Model Law be considered for adoption by UNCITRAL in advance of the completion of an updated Guide to Enactment. UNCITRAL has also recently scheduled a Working Group meeting from May 25th through 29th, 2009, to work on the recommendations.

In order to assist the U.S. Delegation at the Working Group session, a public meeting to review and discuss the current status of the proposed reforms will be held on April 22, 2009.

Time and Place: The public meeting will take place at The George Washington University Law School Faculty Conference Center, 5th Floor, 2000 H Street., Washington, DC on April 22, 2009 from 10 a.m. to 12 noon EDT.

Public Participation: Comments may be submitted prior to or after the meeting to the Office of Private International Law, U.S. Department of State, 2430 E Street, NW., Washington, DC 20037–2851, attn: Michael Dennis, or by facsimile to 202–776–8482, or by electronic e-mail to *DennisMJ@State.gov*. Persons wishing to attend the meeting should call Trisha Smeltzer at 202–776–8423 or contact by e-mail at *SmeltzerTK@state.gov*.

Dated: April 6, 2009.

Michael J. Dennis,

Attorney-Adviser, Office of Private International Law, Department of State.

[FR Doc. E9–8393 Filed 4–10–09; 8:45 am]

BILLING CODE 7410–08–P

DEPARTMENT OF STATE

[Public Notice 6548]

Shipping Coordinating Committee; Notice of Meeting

The Shipping Coordinating Committee (SHC) will conduct an open meeting at 9:30 a.m. on Friday, May 1, 2009, in Room 2415 of the United States Coast Guard Headquarters Building, 2100 Second Street, SW., Washington, DC 20593. The primary purpose of the meeting is to prepare for the International Maritime Organization (IMO) Diplomatic Conference for the Safe and Environmentally Sound Recycling of Ships to be held at the Hong Kong Convention and Exhibition Centre (HKCEC), 1 Expo Drive, Wanchai, Hong Kong, China, from May 11–15, 2009.

The provisional agenda calls for the Conference to consider the draft International Convention for the Safe and Environmentally Sound Recycling of Ships, the text of which has been prepared by the IMO Marine Environment Protection Committee (MEPC), and any draft Conference resolutions. The Conference agenda also calls for the adoption of the Final Act and any instruments, recommendations and resolutions resulting from the work of the Conference, as well as signature of the Final Act.

Members of the public may attend the May 1st meeting of the SHC up to the seating capacity of the room. Please note that due to security considerations, two valid, government-issued photo identification documents must be presented to gain entrance to the building. The Coast Guard Headquarters building is accessible by taxi and privately owned conveyance. Please note that parking in the vicinity of the building is extremely limited and that public transportation is not generally available.

To facilitate attendance to this meeting, those who plan to attend should contact the meeting coordinator, LCDR Jason Smith—not later than 9:30 a.m. on Tuesday, April 28, 2009—by e-mail at *jason.e.smith2@uscg.mil;* by phone at (202) 372–1376; by fax at (202) 372–1925; or by writing to Commandant (CG–5212), U.S. Coast Guard Headquarters, 2100 2nd Street, SW., Room 1308, Washington, DC 20593–0001. Additional information regarding other SHC public meetings and associated IMO meetings may be found at: *http://www.uscg.mil/hq/cg5/imo*.

Dated: April 7, 2009.

Mark Skolnicki,

Executive Secretary, Shipping Coordinating Committee, Department of State.

[FR Doc. E9–8394 Filed 4–10–09; 8:45 am]

BILLING CODE 4710–09–P

OFFICE OF THE UNITED STATES TRADE REPRESENTATIVE

Free Trade Agreements; Invitation for Applications for Inclusion on the Dominican Republic-Central America-United States Free Trade Agreement Dispute Settlement Rosters

AGENCY: Office of the United States Trade Representative (''USTR'').

ACTION: Invitation for applications.

SUMMARY: The Dominican Republic-Central America-United States Free Trade Agreement (''CAFTA–DR'' or ''Agreement'') requires the establishment of four rosters of individuals that would be available to serve as panelists in dispute settlement proceedings arising under the Agreement. A general roster is required to be established under Chapter Twenty (Dispute Settlement). Chapter Twelve (Financial Services), Chapter Sixteen (Labor), and Chapter Seventeen (Environment) require the establishment of separate rosters for disputes arising under those chapters.

DATES: Applications should be received no later than May 13, 2009.

ADDRESSES: Applications should be submitted electronically to *http://www.regulations.gov*, docket number USTR–2008–0040. If you are unable to provide submissions by *http://www.regulations.gov,* please contact Sandy McKinzy at (202) 395–9483 to arrange for an alternative method of transmission.

FOR FURTHER INFORMATION CONTACT: For information regarding the form of the application, contact Sandy McKinzy, Legal Technician, USTR Office of Monitoring and Enforcement, at (202) 395–3582. For other inquiries, contact Priti Seksaria Agrawal, Associate General Counsel, at (202) 395–3150.

SUPPLEMENTARY INFORMATION:

Dispute Settlement Under the Dominican Republic-Central America-United States Free Trade Agreement

The CAFTA–DR is a plurilateral agreement in force between the United States, Costa Rica, the Dominican Republic, El Salvador, Guatemala, Honduras, and Nicaragua (''CAFTA–DR Parties''). The CAFTA–DR sets out detailed procedures for the resolution of disputes arising under the Agreement. Dispute settlement involves three stages: (1) Lower level consultations between the disputing CAFTA–DR Parties to try to arrive at a mutually satisfactory resolution of the matter; (2) cabinet-level consultations between the disputing CAFTA–DR Parties; and, (3) resort to a neutral panel to make a determination regarding the matter at issue between the disputing CAFTA–DR Parties. The panel is composed of three individuals chosen by the disputing CAFTA–DR Parties.

The CAFTA–DR requires the establishment of a general dispute settlement roster from which panelists shall normally be selected. The roster is to be composed of up to 70 individuals, up to 14 of whom are to be individuals who are not a national of any CAFTA–DR Party. Once established, the roster remains in effect for a minimum of three years. See CAFTA–DR Article 20.7. The CAFTA–DR also requires the establishment of three additional rosters, one each for disputes arising under Chapter Twelve (Financial Services), Chapter Sixteen (Labor), and Chapter Seventeen (Environment). Each of these three rosters shall remain in effect for a minimum of three years and is to be composed of up to 28 individuals, up to seven of whom are to be individuals who are not a national of any CAFTA–DR Party. See CAFTA–DR Articles 12.18, 16.7, and 17.11.

Upon each request for establishment of a panel, potential panelists may be requested to complete a disclosure form, which could be used to identify possible conflicts of interest or appearances thereof. The disclosure form may request information regarding financial interests and affiliations, including information regarding the identity of clients of the potential panelist and, if applicable, clients of the potential panelist's firm.

The text of the CAFTA–DR can be found through the Office of the U.S. Trade Representative Web site (*http://www.ustr.gov).*

Criteria for Eligibility for Inclusion on a CAFTA–DR Roster

To qualify for inclusion on the general roster an applicant must: (1) Have expertise or experience in law, international trade, other matters covered by the Agreement, or the resolution of disputes arising under international trade agreements; (2) be objective, reliable, and possess sound judgment; (3) be independent of, and not be affiliated with or take instructions from any CAFTA–DR Party; and (4) comply with a code of conduct.

To qualify for inclusion on the financial services roster an applicant must have expertise or experience in financial services law or practice, which may include the regulation of financial institutions, and meet the qualifications set out in (2) through (4) above.

To qualify for inclusion on the labor roster an applicant must have expertise or experience in labor law or its enforcement, international trade, or the resolution of disputes arising under international agreements, and meet the qualifications set out in (2) through (4) above.

To qualify for inclusion on the environment roster an applicant must have expertise or experience in environmental law or its enforcement, international trade, or the resolution of disputes arising under international trade or environmental agreements, and meet the qualifications set out in (2) through (4) above.

The United States seeks applications for inclusion on the rosters from qualified persons, including persons who are not a national of the United States or another CAFTA–DR Party.

Procedures for Selection of Roster Members

An interagency committee chaired by USTR prepares a preliminary list of candidates eligible for inclusion on the various rosters. After consultation with the Committee on Ways and Means of the House of Representatives and the Committee on Finance of the Senate, USTR selects the final list of individuals that the United States will nominate for inclusion on the rosters. Roster members are appointed by consensus of the CAFTA–DR Parties for terms of three years, and may be reappointed.

Applications

Eligible individuals who wish to be considered for inclusion on one or more of the CAFTA–DR rosters are invited to submit applications. Persons submitting applications should submit one copy electronically to *http://www.regulations.gov*, docket number USTR–2008–0040. If you are unable to provide submissions by *http://www.regulations.gov*, please contact Sandy McKinzy at (202) 395–9483 to arrange for an alternative method of transmission.

Applications must be typewritten, and should be headed ''Application for Inclusion on a CAFTA–DR Roster.'' Applicants must specify for which of the four rosters they wish to be considered: General, Financial Services, Labor, or Environment. Applicants may specify more than one roster. Applications should include the following information, and each section of the application should be numbered as indicated:

1. Name of the applicant.
2. Business address, telephone number, fax number, and e-mail address.
3. Citizenship(s).
4. Current employment, including title, description of responsibility, and name and address of employer.
5. Relevant education and professional training.
6. Spanish language fluency, written and spoken.
7. Post-education employment history, including the dates and addresses of each prior position and a summary of responsibilities.
8. Relevant professional affiliations and certifications, including, if any, current bar memberships in good standing.
9. A list and copies of publications, testimony, and speeches, if any, concerning the relevant area of expertise. Judges or former judges should list relevant judicial decisions. Only one copy of publications, testimony, speeches, and decisions need be submitted.
10. A list of international trade proceedings or domestic proceedings relating to international trade matters or other relevant matters in which the applicant has provided advice to a party or otherwise participated.

11. Summary of any current and past employment by, or consulting or other work for, the Governments of Costa Rica, the Dominican Republic, El Salvador, Guatemala, Honduras, Nicaragua, or the United States.

12. The names and nationalities of all foreign principals for whom the applicant is currently or has previously been registered pursuant to the Foreign Agents Registration Act, 22 U.S.C. 611 *et seq.*, and the dates of all registration periods.

13. A short statement of qualifications and availability for service on CAFTA–DR dispute settlement panels, including information relevant to the applicant's familiarity with international trade law and relevant area(s) for the roster(s) for which the applicant seeks to be considered, and willingness and ability to make time commitments necessary for service on panels.

14. On a separate page, the names, addresses, telephone and fax numbers of three individuals willing to provide information concerning the applicant's qualifications for service, including the applicant's character, reputation, reliability, judgment, and familiarity with the relevant area of expertise.

Public Disclosure

Applications normally will not be subject to public disclosure and will not be posted publicly on www.regulations.gov. Applications may be shared with other agencies, the Committee on Ways and Means of the House of Representatives, the Committee on Finance of the Senate, and the Governments of the other CAFTA–DR Parties for their consideration in determining whether to appoint persons to the rosters.

False Statements

False statements by an applicant regarding his or her personal or professional qualifications, or financial or other relevant interests that bear on the applicant's suitability for placement on a roster or appointment to a panel are subject to criminal sanctions under 18 U.S.C. 1001.

Paperwork Reduction Act

This notice contains a collection of information provision subject to the Paperwork Reduction Act (''PRA'') that has been approved by the Office of Management and Budget (''OMB''). Notwithstanding any other provision of law, no person is required to respond to nor shall a person be subject to a penalty for failure to comply with a collection of information subject to the requirements of the PRA unless that collection of information displays a currently valid OMB number. This notice's collection of information burden is only for those persons who wish voluntarily to apply for inclusion on a CAFTA–DR roster. It is expected that the collection of information burden will be under three hours. This collection of information contains no annual reporting or record keeping burden. This collection of information was approved by OMB under OMB Control Number 0350–0014. Please send comments regarding the collection of information burden or any other aspect of the information collection to USTR at *http://www.regulations.gov*.

Privacy Act

The following statements are made in accordance with the Privacy Act of 1974, as amended (5 U.S.C. 552a). Provision of the information requested above is voluntary; however, failure to provide the information will preclude consideration as a candidate for inclusion on a CAFTA–DR roster. This information is maintained in a system of records entitled ''Dispute Settlement Panelists Roster.'' Notice regarding this system of records was published in the **Federal Register** on November 30, 2001. The information provided is needed, and will be used by USTR, other Federal government trade policy officials concerned with dispute settlement under the CAFTA–DR, and officials of the other CAFTA–DR Parties to select well-qualified individuals for inclusion on the CAFTA–DR rosters and for service on CAFTA–DR dispute settlement panels.

Daniel E. Brinza,

Assistant United States Trade Representative for Monitoring and Enforcement.

[FR Doc. E9–8321 Filed 4–10–09; 8:45 am]

BILLING CODE 3190–W9–P

DEPARTMENT OF TRANSPORTATION

Pipeline and Hazardous Materials Safety Administration

Office of Hazardous Materials Safety; Notice of Application for Special Permits

AGENCY: Pipeline and Hazardous Materials Safety Administration (PHMSA), DOT.

ACTION: List of applications for special permits.

SUMMARY: In accordance with the procedures governing the application for, and the processing of, special permits from the Department of Transportation's Hazardous Material Regulations (49 CFR Part 107, Subpart B), notice is hereby given that the Office of Hazardous Materials Safety has received the application described herein. Each mode of transportation for which a particular special permit is requested is indicated by a number in the ''Nature of Application'' portion of the table below as follows: 1—Motor vehicle, 2—Rail freight, 3—Cargo vessel, 4—Cargo aircraft only, 5—Passenger-carrying aircraft.

DATES: Comments must be received on or before May 13, 2009.

Address Comments to: Record Center, Pipeline and Hazardous Materials Safety Administration, U.S. Department of Transportation, Washington, DC 20590.

Comments should refer to the application number and be submitted in triplicate. If confirmation of receipt of comments is desired, include a self-addressed stamped postcard showing the special permit number.

FOR FURTHER INFORMATION CONTACT: Copies of the applications are available for inspection in the Records Center, East Building, PHH–30, 1200 New Jersey Avenue, Southeast, Washington DC or at *http://fdms.gov*.

This notice of receipt of applications for special permit is published in accordance with Part 107 of the Federal hazardous materials transportation law (49 U.S.C. 5117(b); 49 CFR 1.53(b)).

Issued in Washington, DC, on April 6, 2009.

Delmer F. Billings,

Director, Office of Hazardous Materials, Special Permits and Approvals.

Application No.	Docket No.	Applicant	Regulation(s) affected	Nature of special permits thereof
		NEW SPECIAL PERMITS		
14820–N		Department of Energy, Washington, DC.	49 CFR 173.302	To authorize the one-time, one-way transportation in commerce of fifty-four (54) neutron detector tubes containing boron trifluoride a Division 2.3 material. (mode 1)
14827–N		Olin Corporation, Chlor Alkali Products, Cleveland, TN.	49 CFR 177.834 (i)(1), (2) and (3).	To authorize the use of video cameras and monitors to observe the loading and unloading operations meeting the definition of ''loading incidental to movement'' or ''unloading incidental to movement'' as those terms are defined in § 171.8 of the Hazardous Materials Regulations from a remote control station in place of personnel remaining within. (mode 1)
14828–N		Croman Corporation, White City, OR.	49 CFR 172.101 Column (9B), 172.204(c)(3), 173.27(b)(2) and (3), 175.3, 175.30 and 175.75.	To authorize the transportation in commerce of certain Division 1.3 explosives which exceed quantities authorized for transportation by cargo aircraft only. (mode 4)
14829–N		Reactives Management Corporation, Chesapeake, VA.	49 CFR 173.337	To authorize the transportation in commerce of nitric oxide, compressed in alternative packaging by motor vehicle. (mode 1)
		NEW SPECIAL PERMITS		
14830–N		VIH Cougar helicopters, Inc., Bellingham, WA.	49 CFR 172.101 HMT Column (9B) 172.200, 172.300, 172.400.	To authorize the transportation of certain forbidden explosives and other hazardous materials by helicopter in remote areas of the U.S. for seismic exploration without being subject to hazard communication requirements and quantity limitations. (mode 4)
14831–N		Gasitech Industries—Gas—Handelsgesellschaft mbH.	49 CFR 180.209(a) and 180.209(b).	To authorize the ultrasonic examination of DOT–3A and DOT–3AA specification cylinders for use in transporting Division 2.1, 2.2 or 2.3 material. (modes 2, 3, 4, 5)
14832–N		Trinity Industries, Inc., Dallas, TX.	49 CFR 173.31, (e)(2)(iii) 173.3 14(c), 179.13(b) and 179.100–12(c).	To authorize the manufacture, marking, sale and use of DOT 105 and DOT 112 specification tank cars for use in transportation of hazardous materials that are toxic-by-inhalation with a welded manway protective housing and an increase to 286,000 pounds gross weight on rail. (mode 2)
14833–N		Takata-Petri AG	49 CFR 173.301(a), 173.302a, 175.3 and 178.65(0(2).	To authorize the manufacture, marking, sale and use of non-DOT specification cylinders for use as components of safety systems. (modes 1, 2, 3, 4, 5)
		NEW SPECIAL PERMITS		
14834–N		Composite Technology Corporation.	49 CFR 173.302a and 180.205.	To authorize the manufacture, marking, sale, and use of non-DOT specification fully wrapped carbon-fiber reinforced aluminum lined cylinders. (modes 1, 2, 3, 4, 5)

[FR Doc. E9–8221 Filed 4–10–09; 8:45 am]
BILLING CODE 4909–60–M

DEPARTMENT OF TRANSPORTATION

Pipeline and Hazardous Materials Safety Administration

Office of Hazardous Materials Safety; Notice of Applications for Modification of Special Permit

AGENCY: Pipeline and Hazardous Materials Safety Administration (PHMSA), DOT.

ACTION: List of applications for modification of special permits.

SUMMARY: In accordance with the procedures governing the application for, and the processing of, special permits from the Department of Transportation's Hazardous Material Regulations (49 CFR Part 107, Subpart B), notice is hereby given that the Office of Hazardous Materials Safety has received the applications described herein. This notice is abbreviated to expedite docketing and public notice. Because the sections affected, modes of transportation, and the nature of application have been shown in earlier **Federal Register** publications, they are not repeated here. Requests for modification of special permits (*e.g.*, to provide for additional hazardous materials, packaging design changes, additional mode of transportation, etc.) are described in footnotes to the application number. Application numbers with the suffix ''M'' denote a modification request. These applications have been separated from the new application for special permits to facilitate processing.

DATES: Comments must be received on or before April 28, 2009.

Address Comments to: Record Center, Pipeline and Hazardous Materials Safety

Administration, U.S. Department of Transportation, Washington, DC 20590.

Comments should refer to the application number and be submitted in triplicate. If confirmation of receipt of comments is desired, include a self-addressed stamped postcard showing the special permit number.

For Further Information: Copies of the applications are available for inspection in the Records Center, East Building, PHH–30, 1200 New Jersey Avenue, Southeast, Washington DC, or at *http://fdms.gov*.

This notice of receipt of applications for modification of special permit is published in accordance with Part 107 of the Federal hazardous materials transportation law (49 U.S.C. 5117(b); 49 CFR 1.53(b)).

Issued in Washington, DC, on April 3, 2009.

Delmer F. Billings,

Director, Office of Hazardous Materials, Special Permits and Approvals.

MODIFICATION SPECIAL PERMITS

Application No.	Docket No.	Applicant	Regulation(s) affected	Nature of special permit thereof
8162–M		Structural Composites Industries, LLC Pomona, CA.	49 CFR 173.302(a)(1); 173.304(a)(1); 175.3.	To modify the special permit to remove one type of material for use in manufacturing cylinders.
11470–M		The Procter & Gamble Company West Chester, OH.	49 CFR 172.301(a)(2)	To modify the special permit to add cargo vessel as an additional mode of transportation.
13292–M		Seaquist Perfect Dispensing Cary, IL.	49 CFR 173.306(h)	To modify the special permit to authorize an increase in volume and to increase the lot size.
14453–M		FIBA Technologies, Inc. Millbury, MA.	49 CFR 180.209	To modify the special permit to authorize an additional Division 2.1 hazardous material and to increase maximum acceptance flaw size used on UE requalification.
14728–M		International Isotopes Inc. Idaho Falls, ID.	49 CFR 173.416(c)	To modify the special permit to authorize an increase in the number of times the packaging can be used and extending the expiration date.
14790–M		Cargill, Incorporated and its affiliated companies Minneapolis, MN.	49 CFR 49 CFR Parts 171–180.	To modify the special permit to and its authorize ID affiliated number markings instead of placards and change from emergency to permanent.

[FR Doc. E9–8222 Filed 4–10–09; 8:45 am]

BILLING CODE 4909–60–M

DEPARTMENT OF TRANSPORTATION

Maritime Administration

Assistance to Small Shipyards Grant Program

AGENCY: Maritime Administration, Department of Transportation.

ACTION: Clarification of application submission date.

Catalog of Federal Domestic Assistance Number: 20.814.

FOR FURTHER INFORMATION CONTACT: Jean E. McKeever, Associate Administrator for Business and Workforce Development, Maritime Administration, 1200 New Jersey Ave., SE., Washington, DC 20590; phone: (202) 366–5737; fax: (202) 366–6988; or e-mail: *jean.mckeever@dot.gov*.

Key Dates: A notice published on April 2, 2009 (74 FR 15049) advised that the period for submitting grant applications for funds under the Omnibus Appropriations Act, 2009, will terminate on May 10, 2009. Inasmuch as May 10, 2009 is a Sunday, such grant applications may be submitted on the following business day, May 11, 2009, by 5 p.m. EDT. Applications received later than this time will not be considered. The Maritime Administrator intends to award such grants no later than July 9, 2009.

Background: Under the Omnibus Appropriations Act, 2009, there is currently $17,500,000 (less two percent for program administration) available for the Small Shipyard Grant program. Separately, the American Recovery and Reinvestment Act of 2009 (ARRA) provided $100 million (less two percent for program administration) for the Small Shipyard Grant program. The availability of this source of funding was announced in the **Federal Register** on March 4, 2009 (74 FR 9474). Applications for grants under the ARRA must be submitted by April 20, 2009. Applications for grants under the ARRA will also be considered for funding under the Omnibus Appropriations Act, 2009, without any additional action required by the applicant. Applications for funding received by the Maritime Administration after 5 p.m. EDT on April 20, 2009 and prior to 5 p.m. EDT on May 11, 2009, will be considered for funding only under the Omnibus Appropriations Act, 2009.

Authority: 46 U.S.C. 54101; 49 CFR 1.66.

Dated: April 7, 2009.

By Order of the Acting Deputy Maritime Administrator.

Leonard Sutter,

Secretary, Maritime Administration.

[FR Doc. E9–8269 Filed 4–10–09; 8:45 am]

BILLING CODE

DEPARTMENT OF TRANSPORTATION

Federal Highway Administration

Buy America Waiver Notification

AGENCY: Federal Highway Administration (FHWA), DOT.

ACTION: Notice.

SUMMARY: This notice provides information regarding the FHWA's finding that a Buy America waiver is appropriate for stainless steel clad reinforcing bars used for experimental purposes in a Federal-aid Bridge construction project; SR2 Kirkwood Highway over Pike Creek in Delaware.

DATES: The effective date of the waiver is April 14, 2009.

FOR FURTHER INFORMATION CONTACT: For questions about this notice, please contact Mr. Gerald Yakowenko, FHWA Office of Program Administration, (202) 366–1562, or via e-mail at *gerald.yakowenko@dot.gov*. For legal questions, please contact Mr. Michael Harkins, FHWA Office of the Chief

Counsel, (202) 366–4928, or via e-mail at *michael.harkins@dot.gov.* Office hours for the FHWA are from 7:45 a.m. to 4:15 p.m., e.t., Monday through Friday, except Federal holidays.

SUPPLEMENTARY INFORMATION:

Electronic Access

An electronic copy of this document may be downloaded from the **Federal Register's** home page at: *http://www.archives.gov* and the Government Printing Office's database at: *http://www.access.gpo.gov/nara.*

Background

The FHWA's Buy America policy in 23 CFR 635.410 requires a domestic manufacturing process for any steel or iron products (including protective coatings) that are permanently incorporated in a Federal-aid construction project. The regulation also provides for a waiver of the Buy America requirements when the application of such requirements would be inconsistent with the public interest or when satisfactory quality domestic steel and iron products are not sufficiently available. This notice provides information regarding the FHWA's finding that a Buy America waiver is appropriate for stainless steel clad reinforcing bars used for experimental purposes in a Federal-aid Bridge construction project administered by the Delaware Department of Transportation (DelDOT).

In accordance with Division K, section 130 of the ''Consolidated Appropriations Act, 2008'' (Pub. L. 110–161), the FHWA published a notice of intent to issue a waiver on its Web site for experimental use of stainless steel clad reinforcing bars for a Federal-aid Bridge project in Delaware (*http://www.fhwa.dot.gov/construction/contracts/waivers.cfm?id=29*) on February 19. The FHWA evaluated several comments received in response to the notice. Some commenters suggested that solid stainless rebar should be used and that stainless clad rebar may be more expensive than solid stainless rebar. Other commenters disagreed with this position and stated that additional experimental review is not required. The Delaware DOT's waiver request is to evaluate the stainless clad reinforcing bars, which have not previously been used in the State, along with two other types of corrosion resistant reinforcing steels under an experimental project. The use of this product in DelDOT's bridge project will enable the State to conduct its own evaluation of this product. Thus, the FHWA agrees with the Delaware DOT that it is in the public interest to waive the Buy America requirements for this experimental project; therefore, the FHWA concludes that a Buy America waiver is appropriate as provided by 23 CFR 635.410(c)(1).

In accordance with the provisions of section 117 of the SAFETEA–LU Technical Corrections Act of 2008 (Pub. L. 110–244, 122 Stat. 1572), the FHWA is providing this notice as its finding that a waiver of Buy America requirements is appropriate. The FHWA invites public comment on this finding for an additional 15 days following the effective date of the finding. Comments may be submitted to the FHWA's Web site via the link provided to the Delaware waiver page noted above.

(Authority: 23 U.S.C. 313; Pub. L. 110–161, 23 CFR 635.410)

Issued on April 7, 2009.

King W. Gee,

Associate Administrator for Infrastructure, Federal Highway Administration.

[FR Doc. E9–8334 Filed 4–10–09; 8:45 am]

BILLING CODE 4910–22–P

DEPARTMENT OF TRANSPORTATION

Federal Highway Administration

Environmental Impact Statement: Erie County, NY

AGENCY: Federal Highway Administration (FHWA), DOT.

ACTION: Notice of intent.

SUMMARY: The FHWA is issuing this notice to advise the public that an environmental impact statement will be prepared for a proposed bridge replacement project (PIN 5758.17) located in Erie County, New York.

FOR FURTHER INFORMATION CONTACT: Jeffrey W. Kolb, P.E., Division Administrator, Federal Highway Administration, New York Division, Leo W. O'Brien Federal Building, 7th Floor Room 719, Clinton Avenue and North Pearl Street, Albany, New York 12207, Telephone: (518) 431–4127; or Alan E. Taylor, P.E., Regional Director, NYSDOT Region 5; 100 Seneca Street, Buffalo NY 14203, Telephone: (716) 847–3238; or Steven P. Ranalli, P.E., Senior Project Manager, Erie Canal Harbor Development Corporation (ECHDC), 95 Perry Street, 5th Floor, Buffalo, NY 14203, Telephone: (716) 846–8241.

SUPPLEMENTARY INFORMATION: The FHWA, in cooperation with the New York State Department of Transportation (NYSDOT) and the Erie Canal Harbor Development Corporation (ECHDC), a subsidiary of the New York State Urban Development Corporation d/b/a/Empire State Development Corporation (ESDC), will prepare an environmental impact statement (EIS) in accordance with the Safe, Accountable, Flexible, Efficient, Transportation Equity Act: A Legacy for Users (SAFETEA–LU) Section 6002 for a National Environmental Policy Act (NEPA) ''Class I'' action on a proposal to replace the former South Michigan Avenue Bridge in the City of Buffalo, Erie County.

A transportation facility is needed that provides a direct link from the inner harbor area to the outer harbor area and providing local access between the two areas while maintaining adequate waterway access for commercial and recreational craft. The facility would be located in one of several locations within a 1.5 mile corridor extending from a northern terminus at the mouth of the Buffalo River (in the vicinity of the Erie Basin Marina) to a southern terminus near the southern navigation limit of the City Ship Canal (west of the existing Ohio Street Bridge) in the inner and outer harbor areas of the City of Buffalo (containing various local streets that end short of the Buffalo River or the City Ship Canal). The range of alternatives will include no action and give consideration to locations derived from previous studies that investigated reconnecting the harbor. Alternatives under consideration include: (1) Taking no action; (2) replacing the South Michigan Avenue Bridge on existing alignment; and (3) constructing a new bridge on new alignment across the Buffalo River and/or City Ship Canal. Additional input from Participating and Cooperating Agencies, and from the public, will be necessary before a final decision will be made regarding the full range of alternatives to be studied.

Letters describing the proposed action and soliciting comments will be sent to appropriate Federal, State, and local agencies, and to private organizations, citizens and other project stakeholders. A series of public information meetings, including a formal NEPA scoping meeting, will be held in the City of Buffalo between May 2009 and August 2011. In addition, a formal NEPA scoping meeting and a public hearing will be held. Public notice will be given of the time and place of the meetings and hearings. The draft EIS will be available for review and comment by the public and agencies.

To ensure that the full range of issues related to this proposed action are addressed and all significant issues identified, comments and suggestions are invited from all interested parties.

Comments or questions concerning this proposed action and the EIS should be directed to the FHWA, NYSDOT or ECHDC at the addresses provided above.

(Catalog of Federal Domestic Assistance Program Number 20.205, Highway Research, Planning and Construction. The regulations implementing Executive Order 12372 regarding intergovernmental consultation on Federal programs and activities apply to this program.)

Authority: 23 U.S.C. 315; U.S.C. 771.123.

Issued on April 7, 2009.

Jeffrey W. Kolb,

Division Administrator, New York Division, Federal Highway Administration, Albany, New York.

[FR Doc. E9–8392 Filed 4–10–09; 8:45 am]

BILLING CODE 4910–22–P

DEPARTMENT OF TRANSPORTATION

Federal Aviation Administration

Commercial Space Transportation Advisory Committee—Open Meeting

AGENCY: Federal Aviation Administration (FAA), DOT.

ACTION: Notice of Commercial Space Transportation Advisory Committee open meeting.

SUMMARY: Pursuant to Section 10(a)(2) of the Federal Advisory Committee Act (Pub. L. 92–463, 5 U.S.C. App. 2), notice is hereby given of a meeting of the Commercial Space Transportation Advisory Committee (COMSTAC). The meeting will take place on Thursday, May 21, 2009, starting at 8 a.m. at the Federal Aviation Administration Headquarters Building, 800 Independence Avenue, SW., Washington, DC, in the Bessie Coleman Conference Center, located on the 2nd Floor. This will be the forty-ninth meeting of the COMSTAC.

The proposed agenda for this meeting will focus on discussions concerning several critical issues, including:

—The impact of the current economy on the U.S. commercial space transportation industry;

—Space situational awareness, space traffic management, and FAA's role in these areas;

—Identifying the critical issues impacting operations at U.S. federal and non-federal launch sites that the COMSTAC should be considering.

There will also be briefings on the 2009 Commercial Space Transportation Market Forecasts and discussions and activity reports by the chairpersons of the COMSTAC working groups. Subject to approval, a portion of the May 21st meeting will be closed to the public (starting at 3:45 p.m.).

Interested members of the public may submit relevant written statements for the COMSTAC members to consider under the advisory process. Statements may be concerning the issues and agenda items mentioned above and/or additional issues that may be relevant for the U.S. commercial space transportation industry. Interested parties wishing to submit written statements should contact Brenda Parker, DFO, (the Contact Person listed below) in writing (mail or e-mail) by May 1, 2009, so that the information can be made available to COMSTAC members for their review and consideration prior to the May 21st meeting. Written statements should be supplied in the following formats: one hard copy with original signature and/or one electronic copy via e-mail.

An agenda will be posted on the FAA Web site at *http://ast.faa.gov*. For specific information concerning the times and locations of the COMSTAC working group meetings, contact the Contact Person listed below.

Individuals who plan to attend and need special assistance, such as sign language interpretation or other reasonable accommodations, should inform the Contact Person listed below in advance of the meeting.

FOR FURTHER INFORMATION CONTACT: Brenda Parker (AST–100), Office of Commercial Space Transportation (AST), 800 Independence Avenue, SW., Room 331, Washington, DC 20591, telephone (202) 267–3674; E-mail *brenda.parker@faa.gov*. Complete information regarding COMSTAC is available on the FAA Web site at: *http://www.faa.gov/about/office_org/headquarters_offices/ast/advisory_committee/*.

Issued in Washington, DC, April 6, 2009.

George C. Nield,

Associate Administrator for Commercial Space Transportation.

[FR Doc. E9–8367 Filed 4–10–09; 8:45 am]

BILLING CODE 4910–13–P

DEPARTMENT OF TRANSPORTATION

Surface Transportation Board

[STB Ex Parte 680 (Sub-No. 1)]

Supplemental Report to the U.S. Surface Transportation Board on Capacity and Infrastructure Investment

AGENCY: Surface Transportation Board, DOT.

ACTION: Notice.

SUMMARY: The Surface Transportation Board seeks written public comments on the independent study prepared by Christensen Associates, Inc., entitled *Supplemental Report to the U.S. Surface Transportation Board on Capacity and Infrastructure Investment*, released on April 8, 2009 (*Report*). This report supplements an earlier report by Christensen Associates, released in November 2008, *A Study of Competition in the U.S. Freight Railroad Industry and Analysis of Proposals That Might Enhance Competition*.

DATES: Comments are due on or before May 8, 2009. Replies to comments are due by May 28, 2009.

ADDRESSES: Comments and replies may be submitted either via the Board's e-filing format or in traditional paper format. Any person using e-filing should attach a document and otherwise comply with the instructions at the E-FILING link on the Board's Web site at *http://www.stb.dot.gov*. Any person submitting a filing in the traditional paper format should send an original and 10 copies referring to STB Ex Parte No. 680 (Sub-No. 1) to: Surface Transportation Board, 395 E Street, SW., Washington, DC 20423–0001.

FOR FURTHER INFORMATION CONTACT: Timothy Strafford, (202) 245–0356. [Assistance for the hearing impaired is available through the Federal Information Relay Service (FIRS) at: (800) 877–8339.]

SUPPLEMENTARY INFORMATION: In September 2007, the Board awarded a contract to Christensen Associates to conduct an independent study that provides a comprehensive analysis of a wide range of issues including competition, capacity, and the interplay between the two. After the study was released, the Board held a public meeting on November 6, 2008, with Christensen Associates to discuss it.

In August 2008, to supplement this study, the Board called for an analysis of long-term forecasts of freight rail demand, particularly the U.S. Department of Transportation's Freight Analysis Framework (FAF). The Board requested a review of FAF and augmentation of FAF to permit greater incentive-based responses by economic agents and to test the sensitivity of FAF to key inputs, such as fuel prices and rates.

The *Report* compares the FAF commodity flow forecasts to other macroeconomic and commodity-specific forecasts to develop alternative forecast scenarios of future freight rail volumes. The *Report* also analyzes the 2007 Cambridge Systematics study that used the FAF commodity flow forecasts to

estimate the amount of infrastructure investment needed to meet the projected demand for rail service through 2035. The *Report* further discusses the role of public involvement in railroad infrastructure investment.

The Board has made this supplemental report available to the public via its Web site, *http://www.stb.dot.gov*, and now seeks public comments and replies from all interested persons.

This action will not significantly affect either the quality of the human environment or the conservation of energy resources.

Decided: April 8, 2009.

By the Board, Anne K. Quinlan, Acting Secretary.

Jeffrey Herzig,

Clearance Clerk.

[FR Doc. E9–8317 Filed 4–10–09; 8:45 am]

BILLING CODE 4915–01–P

DEPARTMENT OF THE TREASURY

Submission for OMB Review; Comment Request

April 6, 2009.

The Department of the Treasury will submit the following public information collection requirement(s) to OMB for review and clearance under the Paperwork Reduction Act of 1995, Public Law 104–13 on or after the date of publication of this notice. Copies of the submission(s) may be obtained by calling the Treasury Bureau Clearance Officer listed. Comments regarding this information collection should be addressed to the OMB reviewer listed and to the Treasury Department Clearance Officer, Department of the Treasury, Room 11000, 1750 Pennsylvania Avenue, NW., Washington, DC 20220.

DATES: Written comments should be received on or before May 13, 2009 to be assured of consideration.

Financial Crimes Enforcement Network (FinCEN)

OMB Number: 1506–0029.

Type of Review: Extension.

Title: Suspicious Activity Report by Insurance Companies.

Form: 108.

Description: 31 CFR 103.16 requires insurance companies to report suspicious activities to the Financial Crimes Enforcement Network. FinCEN Form 108 is an aid to this required reporting providing the filer with a guide in completing this reporting requirement.

Respondents: Businesses or other for-profits.

Estimated Total Reporting Burden: 14,400 hours.

Clearance Officer: Russell Stephenson, (202) 354–6012, Department of the Treasury, Financial Crimes Enforcement Network, P.O. Box 39, Vienna, VA 22183.

OMB Reviewer: Shagufta Ahmed, (202) 395–7873, Office of Management and Budget, Room 10235, New Executive Office Building, Washington, DC 20503.

Celina Elphage,

Treasury PRA Clearance Officer.

[FR Doc. E9–8306 Filed 4–10–09; 8:45 am]

BILLING CODE 4810–02–P

DEPARTMENT OF THE TREASURY

Submission for OMB Review; Comment Request

April 6, 2009.

The Department of the Treasury will submit the following public information collection requirement(s) to OMB for review and clearance under the Paperwork Reduction Act of 1995, Public Law 104–13 on or after the date of publication of this notice. Copies of the submission(s) may be obtained by calling the Treasury Bureau Clearance Officer listed. Comments regarding this information collection should be addressed to the OMB reviewer listed and to the Treasury Department Clearance Officer, Department of the Treasury, Room 11000, and 1750 Pennsylvania Avenue, NW., Washington, DC 20220.

DATES: Written comments should be received on or before May 13, 2009 to be assured of consideration.

Internal Revenue Service (IRS)

OMB Number: 1545–0916.

Type of Review: Extension.

Title: EE–96–85 (NPRM) and EE–63–84 (Temporary regulations) Effective Dates and Other Issues Arising Under the Employee Benefit Provisions of the Tax Reform Act of 1984.

Description: These temporary regulations provide rules relating to effective dates and other issues arising under sections 91, 223 and 511–561 of the Tax Reform Act of 1984.

Respondents: Businesses or other for-profits.

Estimated Total Burden Hours: 4,000 hours.

OMB Number: 1545–1957.

Type of Review: Extension.

Title: Notice 2005–64, Foreign Tax Credit and Other Guidance under Section 965.

Description: This document provides guidance under new section 965 enacted by the American Jobs Creation Act of 2004 (Pub. L. 108–357). In general, and subject to limitation and conditions, section 965(a) provides that a corporation that is a U.S. shareholder of a controlled foreign corporation (CFC) may elect, for one taxable year, an 85 percent dividends received deduction (DRD) with respect to certain cash dividends it receives from its CFC's. Section 965(f) provides that taxpayers may elect the application of section 965 for either the taxpayer's last taxable year which begins before October 22, 2004, or the taxpayer's.

Respondents: Businesses or other for-profits.

Estimated Total Burden Hours: 250,000 hours.

OMB Number: 1545–1671.

Type of Review: Extension.

Title: REG–209709–94 (Final) Amortization of Intangible Property.

Description: The information is required by the IRS to aid it in administering the law and to implement the election provided by section 197(f)(9)(B) of the Internal Revenue Code. The information will be used to verify that a taxpayer is properly reporting its amortization and income taxes.

Respondents: Businesses or other for-profits.

Estimated Total Burden Hours: 1,500 hours.

OMB Number: 1545–1528.

Type of Review: Extension.

Title: Revenue Procedure 97–15, Section 103—Remedial Payment Closing Agreement Program.

Description: This information is required by the Internal Revenue Service to verify compliance with sections 57, 103, 141, 142, 144, 145, and 147 of the Internal Revenue Code of 1986, as applicable (including any corresponding provision, if any, of the Internal Revenue Code of 1954). This information will be used by the Service to enter into a closing agreement with the issuer of certain state or local bonds and to establish the closing agreement amount.

Respondents: State, Local, and Tribal Governments.

Estimated Total Burden Hours: 75 hours.

Clearance Officer: R. Joseph Durbala, (202) 622–3634, Internal Revenue Service, Room 6516, 1111 Constitution Avenue, NW., Washington, DC 20224.

OMB Reviewer: Shagufta Ahmed, (202) 395–7873, Office of Management and Budget, Room 10235, New

Executive Office Building, Washington, DC 20503.

Celina Elphage,

Treasury PRA Clearance Officer.

[FR Doc. E9–8307 Filed 4–10–09; 8:45 am]

BILLING CODE 4830–01–P

DEPARTMENT OF THE TREASURY

United States Mint

Notification of Citizens Coinage Advisory Committee April 2009 Public Meeting

ACTION: Notification of Citizens Coinage Advisory Committee April 2009 Public Meeting.

SUMMARY: Pursuant to United States Code, Title 31, section 5135(b)(8)(C), the United States Mint announces the Citizens Coinage Advisory Committee (CCAC) public meeting scheduled for April 28, 2009.

Date: April 28, 2009.

Time: 9:30 a.m. to 12 p.m.

Location: United States Mint, 801 9th Street NW., Washington, DC 20220.

Subject: Review candidate designs for the reverse of the 2010 Lincoln One-Cent Coin and the 2010 Native American $1 Coin.

Interested persons should call 202–354–7502 for the latest update on meeting time and room location.

In accordance with 31 U.S.C. 5135, the CCAC:

■ Advises the Secretary of the Treasury on any theme or design proposals relating to circulating coinage, bullion coinage, Congressional Gold Medals, and national and other medals.

■ Advises the Secretary of the Treasury with regard to the events, persons, or places to be commemorated by the issuance of commemorative coins in each of the five calendar years succeeding the year in which a commemorative coin designation is made.

■ Makes recommendations with respect to the mintage level for any commemorative coin recommended.

FOR FURTHER INFORMATION CONTACT: Cliff Northup, United States Mint Liaison to the CCAC; 801 9th Street, NW., Washington, DC 20220; or call 202–354–7200.

Any member of the public interested in submitting matters for the CCAC's consideration is invited to submit them by fax to the following number: 202–756–6830.

Authority: 31 U.S.C. 5135(b)(8)(C).

Dated: April 6, 2009.

Edmund C. Moy,

Director, United States Mint.

[FR Doc. E9–8313 Filed 4–10–09; 8:45 am]

BILLING CODE 4810–02–P

U.S.-CHINA ECONOMIC AND SECURITY REVIEW COMMISSION

Notice of Open Public Hearing

AGENCY: U.S.-China Economic and Security Review Commission.

ACTION: Notice of open public hearing—April 30, 2009, Washington, DC.

SUMMARY: Notice is hereby given of the following hearing of the U.S.-China Economic and Security Review Commission.

Name: Carolyn Bartholomew, Chairman of the U.S.-China Economic and Security Review Commission.

The Commission is mandated by Congress to investigate, assess, and report to Congress annually on ''the national security implications of the economic relationship between the United States and the People's Republic of China.''

Pursuant to this mandate, the Commission will hold a public hearing in Washington, DC on April 30, 2009 to address ''China's Propaganda and Influence Operations, Its Intelligence Activities that Target the United States, and the Resulting Impacts on U.S. National Security.''

Background

This event is the fourth in a series of public hearings the Commission will hold during its 2009 report cycle to collect input from leading academic, industry, and government experts on national security implications of the U.S. bilateral trade and economic relationship with China. The April 30 hearing will examine China's external propaganda and international public diplomacy efforts, China's efforts to exert influence on U.S. institutions and public opinion, China's espionage and intelligence operations directed at the United States, and China's cyber espionage directed against the United States.

The April 30 hearing will be Co-chaired by Commissioners William A. Reinsch and Peter Brookes.

Information on hearings, as well as transcripts of past Commission hearings, can be obtained from the USCC Web Site *http://www.uscc.gov*.

Copies of the hearing agenda will be made available on the Commission's Web Site *http://www.uscc.gov* as soon as available. Any interested party may file a written statement by April 30, 2009, by mailing to the contact below. On April 30, the hearing will be held in two sessions, one in the morning and one in the afternoon. A portion of each panel will include a question and answer period between the Commissioners and the witnesses.

Date and Time: Thursday, April 30, 2009, 8:30 a.m. to 4:30 p.m. Eastern Standard Time. A detailed agenda for the hearing will be posted to the Commission's Web Site at *http://www.uscc.gov* in the near future.

ADDRESSES: The hearing will be held on Capitol Hill in Room 485 of the Russell Senate Office Building located at Delaware and Constitution Avenues, NE., Washington, DC 20510. Public seating is limited to about 50 people on a first come, first served basis. Advance reservations are not required.

FOR FURTHER INFORMATION CONTACT: Any member of the public wishing further information concerning the hearing should contact Kathy Michels, Associate Director for the U.S.-China Economic and Security Review Commission, 444 North Capitol Street, NW., Suite 602, Washington, DC 20001; phone: 202–624–1409, or via email at *kmichels@uscc.gov*.

Authority: Congress created the U.S.-China Economic and Security Review Commission in 2000 in the National Defense Authorization Act (Public Law 106–398), as amended by Division P of the Consolidated Appropriations Resolution, 2003 (Pub. L. 108–7), as amended by Public Law 109–108 (November 22, 2005).

Dated: April 8, 2009.

Kathleen J. Michels,

Associate Director, U.S.-China Economic and Security Review Commission.

[FR Doc. E9–8374 Filed 4–10–09; 8:45 am]

BILLING CODE 1137–00–P

UNITED STATES INSTITUTE OF PEACE

Notice of Meeting

AGENCY: United States Institute of Peace.

Date/Time: Thursday, April 23, 2009; 9:30 a.m.–3:30 p.m.

Location: 1200 17th Street, NW., Suite 200, Washington, DC 20036–3011.

Status: Open Session—Portions may be closed pursuant to Subsection (c) of Section 552(b) of Title 5, United States Code, as provided in subsection 1706(h)(3) of the United States Institute of Peace Act, Pub. L. 98–525.

Agenda: April 23, 2009 Board Meeting; Approval of Minutes of the One Hundred Thirty-Second Meeting (January 9, 2009) of the Board of

Directors; Chairman's Report; President's Report; Education and Training Center Update; Budget Update; Selection of Peace Scholars; Selection of National Peace Essay Contest Winners; Other General Issues.

Contact: Tessie F. Higgs, Executive Office, Telephone: (202) 429–3836.

Dated: April 2, 2009.

Michael Graham,

Executive Vice President, United States Institute of Peace.

[FR Doc. E9–8109 Filed 4–10–09; 8:45 am]

BILLING CODE 6820–AR–M

Federal Register

Monday,
April 13, 2009

Part II

Department of Energy

10 CFR Part 430

Energy Conservation Program: Energy Conservation Standards for General Service Fluorescent Lamps and Incandescent Reflector Lamps; Proposed Rule

DEPARTMENT OF ENERGY

10 CFR Part 430

[Docket Number EE–2006–STD–0131]

RIN 1904–AA92

Energy Conservation Program: Energy Conservation Standards for General Service Fluorescent Lamps and Incandescent Reflector Lamps

AGENCY: Office of Energy Efficiency and Renewable Energy, Department of Energy.

ACTION: Notice of proposed rulemaking.

SUMMARY: The Energy Policy and Conservation Act (EPCA) prescribes energy conservation standards for various consumer products and commercial and industrial equipment, including general service fluorescent lamps (GSFL) and incandescent reflector lamps (IRL), and the statute also requires the Department of Energy (DOE) to subsequently determine whether more stringent, amended standards for GSFL and IRL would be technologically feasible and economically justified, and would save a significant amount of energy. In addition, EPCA directs DOE to consider adoption of standards for additional GSFL not already covered by EPCA-prescribed standards. In this notice, DOE proposes amended energy conservation standards for certain GSFL and IRL and new energy conservation standards for certain additional GSFL not currently covered by standards.

DATES: DOE held a public meeting on Tuesday, February 3, 2009 in Washington, DC. DOE began accepting comments, data, and information regarding this notice of proposed rulemaking (NOPR) at the public meeting, and will continue to accept comments until no later than June 12, 2009. See section VIII, ''Public Participation,'' of this NOPR for details.

ADDRESSES: The public meeting was held at the U.S. Department of Energy, Forrestal Building, Room 1E–245, 1000 Independence Avenue, SW., Washington, DC 20585–0121.

Any comments submitted must identify the NOPR for Energy Conservation Standards for Lighting Products, and provide the docket number EE–2006–STD–0131 and/or regulatory information number (RIN) number 1904–AA92. Comments may be submitted using any of the following methods:

- *Federal eRulemaking Portal: http://www.regulations.gov.* Follow the instructions for submitting comments.
- *E-mail: fluorescent_and_incandescent_lamps.rulemaking@ee.doe.gov.* Include the docket number EE–2006–STD–0131and/or RIN 1904–AA92 in the subject line of the message.
- *Postal Mail:* Ms. Brenda Edwards, U.S. Department of Energy, Building Technologies Program, Mailstop EE–2J, 1000 Independence Avenue, SW., Washington, DC 20585–0121. Please submit one signed paper original.
- *Hand Delivery/Courier:* Ms. Brenda Edwards, U.S. Department of Energy, Building Technologies Program, 950 L'Enfant Plaza, SW., Suite 600, Washington, DC 20024. Telephone: (202) 586–2945. Please submit one signed paper original.

For detailed instructions on submitting comments and additional information on the rulemaking process, see section VIII of this document (Public Participation).

Docket: For access to the docket to read background documents or comments received, visit the U.S. Department of Energy, Resource Room of the Building Technologies Program, 950 L'Enfant Plaza, SW., Suite 600, Washington, DC, (202) 586–2945, between 9 a.m. and 4 p.m., Monday through Friday, except Federal holidays. Please call Ms. Brenda Edwards at the above telephone number for additional information regarding visiting the Resource Room.

FOR FURTHER INFORMATION CONTACT: Ms. Linda Graves, U.S. Department of Energy, Office of Energy Efficiency and Renewable Energy, Building Technologies Program, EE–2J, 1000 Independence Avenue, SW., Washington, DC 20585–0121. Telephone: (202) 586–1851. E-mail: *Linda.Graves@ee.doe.gov.*

Mr. Eric Stas or Ms. Francine Pinto, U.S. Department of Energy, Office of the General Counsel, GC–72, Forrestal Building, Mail Station GC–72, 1000 Independence Avenue, SW., Washington, DC 20585–0121. Telephone: (202) 586–9507. E-mail: *Eric.Stas@hq.doe.gov* or *Francine.Pinto@hq.doe.gov.*

For information on how to submit or review public comments, contact Ms. Brenda Edwards, U.S. Department of Energy, Office of Energy Efficiency and Renewable Energy, Building Technologies Program, EE–2J, 1000 Independence Avenue, SW., Washington, DC 20585–0121. Telephone: (202) 586–2945. E-mail: *Brenda.Edwards@ee.doe.gov.*

SUPPLEMENTARY INFORMATION:

Table of Contents

I. Summary of the Proposed Rule
II. Introduction
A. Consumer Overview
B. Authority
C. Background
1. Current Standards
2. History of Standards Rulemaking for General Service Fluorescent Lamps, Incandescent Reflector Lamps, and General Service Incandescent Lamps
III. Issues Affecting the Scope of This Rulemaking
A. Additional General Service Fluorescent Lamps for Which DOE is Proposing Standards
1. Scope of EPCA Requirement that DOE Consider Standards for Additional Lamps
2. Identification of the Additional Lamps for Which DOE Proposes Standards
a. Coverage of T5 Lamps
b. Extension of Lamp Wattage Ranges
3. Summary GSFL Lamps to Which DOE Proposes to Extend Coverage
B. Exempted Incandescent Reflector Lamps
C. Amended Definitions
1. ''Rated Wattage''
2. ''Colored Fluorescent Lamp''
D. Off Mode and Standby Mode Energy Consumption Standards
E. Color Rendering Index Standards for General Service Fluorescent Lamps
IV. General Discussion
A. Test Procedures
B. Technological Feasibility
1. General
2. Maximum Technologically Feasible Levels
C. Energy Savings
1. Determination of Savings
2. Significance of Savings
D. Economic Justification
1. Specific Criteria
a. Economic Impact on Manufacturers and Consumers
b. Life-Cycle Costs
c. Energy Savings
d. Lessening of Utility or Performance of Products
e. Impact of Any Lessening of Competition
f. Need of the Nation to Conserve Energy
g. Other Factors
2. Rebuttable Presumption
V. Methodology and Discussion of Comments
A. Product Classes
1. General Service Fluorescent Lamps
a. T12 and T8 Lamps
b. T5 Lamps
c. Correlated Color Temperature
2. Incandescent Reflector Lamps
a. Modified-Spectrum Lamps
b. Long-Life Lamps
c. Lamp Diameter
d. Voltage
B. Screening Analysis
1. General Service Fluorescent Lamps
a. Higher-Efficiency Lamp Fill Gas Composition
b. Higher-Efficiency Phosphors
c. Glass Coating
d. Lamp Diameter
e. Multi-Photon Phosphors
2. Incandescent Reflector Lamps
C. Engineering Analysis
1. Approach
2. Representative Product Classes
3. Baseline Lamps and Systems

a. General Service Fluorescent Lamps
b. Incandescent Reflector Lamps
4. Lamp and Lamp-and-Ballast Designs
a. General Service Fluorescent Lamps
b. Incandescent Reflector Lamps
5. Efficiency Levels
a. General Service Fluorescent Lamps
i. Revisions to ANOPR Efficiency Levels
ii. Four-Foot T5 Miniature Bipin Efficiency Levels
b. Incandescent Reflector Lamps
6. Engineering Analysis Results
a. General Service Fluorescent Lamps
b. Incandescent Reflector Lamps
7. Scaling to Product Classes Not Analyzed
a. General Service Fluorescent Lamps
i. Correlated Color Temperature
ii. U-Shaped Lamps
b. Incandescent Reflector Lamps
i. Modified-Spectrum IRL
ii. Lamp Diameter
iii. Voltage
D. Life-Cycle Cost and Payback Period Analyses
1. Consumer Product Price
2. Sales Tax
3. Installation Costs
4. Disposal Costs
5. Annual Operating Hours
a. Sectors Analyzed
b. Regional Variation
c. Building Type
6. Product Energy Consumption Rate
7. Electricity Prices
8. Electricity Price Trends
9. Lifetime
a. Ballast Lifetime
b. Lamp Lifetime
10. Discount Rates
11. Analysis Period
12. Effective Date
13. Payback Period Inputs
14. Lamp Purchase Events
E. National Impact Analysis—National Energy Savings and Net Present Value Analysis
1. General
a. Overview of NIA Changes in This Notice
2. Shipments Analysis
a. Lamp Inventory
b. Shipments Growth
i. Floor Space and Building Growth
ii. Lamps per Household
iii. Wider Spacing of More-Efficient Fixtures
c. Base-Case Scenarios: Emerging Technologies and Existing Technologies
i. General Service Fluorescent Lamps
ii. Incandescent Reflector Lamps
d. Fluorescent Market Sectors Analyzed
e. GSFL Product Migration
i. Ballast Rule Effective Start Date
ii. Four-Foot Medium Bipin T12 Lamp Replacements
iii. Eight-Foot Single Pin Slimline T12 Lamp Replacements
iv. Four-Foot T5 Lamps
3. Base-Case Market-Share Matrices
a. General Service Fluorescent Lamps
b. Incandescent Reflector Lamps
4. GSFL Standards-Case Shipment Scenarios and Forecasts
a. Shift/Roll-Up Scenarios
b. Lighting Expertise Scenarios
c. Voluntary Retrofits
5. IRL-Standards-Case Shipment Scenarios and Forecasts
i. Shift/Roll-Up Scenarios
ii. Product-Substitution Scenarios
6. Other Inputs
a. Analysis Period
b. Total Installed Cost
c. Electricity Price Forecast
d. Energy Site-to-Source Conversion
e. HVAC Interaction Factor
f. Rebound Effect
g. Discount Rates
F. Consumer Subgroup Analysis
G. Manufacturer Impact Analysis
1. Overview
a. Phase 1, Industry Profile
b. Phase 2, Industry Cash-Flow Analysis
c. Phase 3, Subgroup Impact Analysis
2. Discussion of Comments
3. Government Regulatory Impact Model Analysis
4. Manufacturer Interviews
a. Key Issues
i. GSFL
ii. IRL
b. Government Regulatory Impact Model Scenarios and Key Inputs
i. GSFL Base-Case Shipment Forecast
ii. IRL Base Case Shipments Forecast
iii. GSFL Standards Case Shipments Forecast
iv. IRL Standards-Case Shipments Forecast
v. Manufacturing Production Costs
vi. Amended Energy Conservation Standards Markup Scenarios
vii. Product and Capital Conversion Costs
H. Employment Impact Analysis
I. Utility Impact Analysis
J. Environmental Analysis
VI. Analytical Results
A. Trial Standard Levels
1. General Service Fluorescent Lamps
2. Incandescent Reflector Lamps
B. Economic Justification and Energy Savings
1. Economic Impacts on Consumers
a. Life-Cycle Cost and Payback Period
i. General Service Fluorescent Lamps
ii. Incandescent Reflector Lamps
b. Consumer Subgroup Analysis
i. Low-Income Households
ii. Institutions of Religious Worship
iii. Institutions That Serve Low-Income Populations
iv. Historical Facilities
v. Consumers of T12 electronic ballasts
2. Economic Impacts on Manufacturers
a. Industry Cash-Flow Analysis Results
i. General Service Fluorescent Lamps
ii. Incandescent Reflector Lamps
b. Cumulative Regulatory Burden
c. Impacts on Employment
d. Impacts on Manufacturing Capacity
e. Impacts on Manufacturer Subgroups
3. National Impact Analysis
a. Significance of Energy Savings
b. Net Present Value
c. Impacts on Employment
4. Impact on Utility or Performance of Products
5. Impact of Any Lessening of Competition
6. Need of the Nation to Conserve Energy
C. Proposed Standard
1. Overview
2. General Service Fluorescent Lamps Conclusion
a. Trial Standard Level 5
b. Trial Standard Level 4
c. Trial Standard Level 3
3. Incandescent Reflector Lamps Conclusion
a. Trial Standard Level 5
b. Trial Standard Level 4
VII. Procedural Issues and Regulatory Review
A. Review Under Executive Order 12866
B. Review Under the Regulatory Flexibility Act
C. Review Under the Paperwork Reduction Act
D. Review Under the National Environmental Policy Act
E. Review Under Executive Order 13132
F. Review Under Executive Order 12988
G. Review Under the Unfunded Mandates Reform Act of 1995
H. Review Under the Treasury and General Government Appropriations Act, 1999
I. Review Under Executive Order 12630
J. Review Under the Treasury and General Government Appropriations Act, 2001
K. Review Under Executive Order 13211
L. Review Under the Information Quality Bulletin for Peer Review
VIII. Public Participation
A. Submission of Comments
B. Issues on Which DOE Seeks Comment
IX. Approval of the Office of the Secretary

Acronyms and Abbreviations

ACEEE American Council for an Energy Efficiency Economy
AEO Annual Energy Outlook
ANOPR advance notice of proposed rulemaking
ANSI American National Standards Institute
ASAP Appliance Standards Awareness Project
ASE Alliance to Save Energy
BF ballast factor
BLS Bureau of Labor Statistics
BPAR bulged parabolic aluminized reflector
BR bulged reflector (reflector lamp shape)
BT Building Technologies Program
BTU British Thermal Unit
CAIR Clean Air Interstate Act
CAMR Clean Air Mercury Rule
CBECS Commercial Buildings Energy Consumption Survey
CCT correlated color temperature
CFR Code of Federal Regulations
CFL compact fluorescent lamp
CIE International Commission on Illumination
CMH ceramic metal halide
CO_2 carbon dioxide
CRI color rendering index
CSL candidate standard level
DIY do-it-yourself
DOE U.S. Department of Energy
DOJ U.S. Department of Justice
E26 Edison screw-base (incandescent lamp base type)
EERE Office of Energy Efficiency and Renewable Energy
EIA Energy Information Administration
EISA 2007 Energy Independence and Security Act of 2007
EL efficacy level
EPA Environmental Protection Agency
EPACT 1992 Energy Policy Act of 1992
EPACT 2005 Energy Policy Act of 2005
EPCA Energy Policy and Conservation Act
ER elliptical reflector (reflector lamp shape)

FEMP Federal Energy Management Program
FR Federal Register
FTC Federal Trade Commission
GE General Electric Lighting and Industrial
GRIM Government Regulatory Impact Model
GSFL general service fluorescent lamp
GSIL general service incandescent lamp
GW gigawatt
Hg mercury
HID high-intensity discharge
HIR halogen infrared reflector
HO high output
HVAC Heating, Ventilating and Air-Conditioning
IESNA Illuminating Engineering Society of North America
ImSET Impact of Sector Energy Technologies
INPV industry net present value
I–O input-output
IPCC Intergovernmental Panel on Climate Change
IR Infrared
IRFA initial regulatory flexibility analysis
IRL incandescent reflector lamp
K degrees Kelvin
kt kilotons
LCC life-cycle cost
LED Light-Emitting Diode
LMC U.S. Lighting Market Characterization Volume I
Lm/W lumens per watt
MBP medium bipin
MECS Manufacturer Energy Consumption Survey (MECS)
MIA Manufacturer Impact Analysis
MMt million metric tons
Mt metric tons
MW megawatts
NAICS North American Industry Classification System
NCLC National Consumer Law Center
NEEP Northeast Energy Efficiency Partnership
NEMA National Electrical Manufacturers Association
NEMS National Energy Modeling System
NEMS–BT National Energy Modeling System—Building Technologies
NES national energy savings
NIA National Impact Analysis
NIST National Institute of Standards and Technology
NOPR notice of proposed rulemaking
NO_X nitrogen oxides
NPCC Northwest Power and Conservation Council
NPV net present value
NRDC Natural Resources Defense Council
NVLAP National Voluntary Laboratory Accreditation Program
OEM Original Equipment Manufacturer
OIRA Office of Information and Regulatory Affairs
OMB U.S. Office of Management and Budget
PAR parabolic aluminized reflector (reflector lamp shape)
PBP payback period
PG&E Pacific Gas and Electric
quad quadrillion BTU
R reflector (reflector lamp shape)
R–CFL reflector compact fluorescent lamp
R&D research and development
RDC recessed double contact
RECS Residential Energy Consumption Survey
RIA regulatory impact analysis
RoHS Restriction on Hazardous Substances directive
SBA Small Business Administration
SCF Survey of Consumer Finances
SEC Securities and Exchange Commission
SEL spectrally-enhanced lighting
SG&A selling, general, and administrative costs
SO standard output
SO_2 sulfur dioxide
SP single pin
S&P Standard & Poor's
T8, T10, T12 tubular fluorescent lamps, diameters of 1, 1.25 or 1.5 inches, respectively
TSD technical support document
TSL trial standard level
TWh terawatt-hour
UMRA Unfunded Mandates Reform Act
U.S.C. United States Code
UV ultraviolet
V volts
VHO very high output
W watts

I. Summary of the Proposed Rule

The Energy Policy and Conservation Act (EPCA or the Act) (42 U.S.C. 6291 *et seq.*), as amended, requires DOE to consider whether to amend the existing energy conservation standards for GSFL and IRL, and to also consider whether to adopt new energy conservation standards for additional types of GSFL beyond those already covered by EPCA-prescribed standards. (42 U.S.C. 6295(i)(3)–(5)) The Act also specifies that any new or amended energy conservation standard DOE prescribes for certain consumer and/or commercial products, such as GSFL and IRL, shall be designed to ''achieve the maximum improvement in energy efficiency * * * which the Secretary determines is technologically feasible and economically justified.'' (42 U.S.C. 6295(o)(2)(A); 6316(a)) Furthermore, the new or amended standard must ''result in significant conservation of energy.'' (42 U.S.C. 6295(o)(3)(B); 6316(a)) In accordance with these and other statutory provisions discussed in this notice, DOE proposes new and amended energy conservation standards for GSFL and IRL, as shown in Table I.1 and Table I.2. The proposed standards would apply to all products listed in Table I.1 and Table I.2 that are manufactured in or imported into the United States on or after June 30, 2012.

TABLE I.1—SUMMARY OF THE PROPOSED ENERGY CONSERVATION STANDARDS FOR GENERAL SERVICE FLUORESCENT LAMPS

Lamp type	Correlated color temperature	Proposed level lm/W	Percent increase over current standards or baseline
4-Foot Medium Bipin	≤ 4,500K	84	12%
	> 4,500K	78	4%
2-Foot U-Shaped	≤ 4,500K	78	15%/22%*
	> 4,500K	73	7%/14%*
8-Foot Slimline	≤ 4,500K	95	19%
	> 4,500K	91	14%
8-Foot High Output	≤ 4,500K	88	10%
	> 4,500K	84	5%
4-Foot Miniature Bipin Standard Output	≤ 4,500K	103	20%
	> 4,500K	97	13%
4-Foot Miniature Bipin High Output	≤ 4,500K	89	16%
	> 4,500K	85	10%

* For these product classes, EPCA has different efficacy standards for lamps with wattages less than 35W and greater than or equal to 35W.

TABLE I.2—SUMMARY OF THE PROPOSED ENERGY CONSERVATION STANDARD FOR IRL

Lamp type	Diameter	Voltage	Proposed level lm/W	Percent increase over current standards or baseline
Standard Spectrum 40W–205W	> 2.5 inches	≥ 125	$7.1P^{0.27}$	69%–100%
		< 125	$6.2P^{0.27}$	47%–75%
	≤ 2.5 inches	≥ 125	$6.3P^{0.27}$	50%–78%
		< 125	$5.5P^{0.27}$	31%–55%
Modified Spectrum 40W–205W	> 2.5 inches	≥ 125	$5.8P^{0.27}$	38%–63%
		< 125	$5.0P^{0.27}$	19%–41%
	≤ 2.5 inches	≥ 125	$5.1P^{0.27}$	21%–44%
		< 125	$4.4P^{0.27}$	7%–27%

Note: P is equal to the rated lamp wattage, in watts.

DOE's analyses indicate that the proposed standards would save a significant amount of energy—an estimated 3.2 to 7.3 quads (for GSFL) and 1.3 to 2.3 quads (for IRL) of cumulative energy over 31 years (2012–2042). The economic impacts on most GSFL and all IRL individual and commercial consumers (*i.e.*, the average life-cycle cost (LCC) savings) are positive.

The cumulative national net present value (NPV) of total consumer costs and savings of the proposed standards from 2012 to 2042 in 2007$ ranges from $3.2 billion (at a 7-percent discount rate) to $25.7 billion (at a 3-percent discount rate) for GSFL. For IRL, the NPV from 2012 to 2042 in 2007$ ranges from $3.7 billion (at a 7-percent discount rate) to $14.0 billion (at a 3-percent discount rate). This is the estimated total value of future operating-cost savings minus the estimated increased product costs, discounted to 2007. DOE estimates the GSFL industry net present value (INPV) to currently be $575–602 million in 2007$. If DOE were to adopt the proposed standards, it expects that manufacturers may lose up to 24 percent of their INPV, which is approximately $139 million. The NPV of the proposed standards for GSFL consumers (at least $3.2 billion at the 7-percent discount rate) would exceed anticipated industry losses by at least 23 times. DOE estimates the IRL industry net present value to be $207–267 million in 2007$. If DOE were to adopt the proposed standards, it expects that manufacturers may lose 29–46 percent of their INPV, which is approximately $77–94 million. The NPV of the proposed standards for IRL consumers (at least $3.7 billion at the 7-percent discount rate) would exceed anticipated industry losses by at least 39 times.

In addition, the proposed standards would have significant environmental benefits. All of the energy saved would be in the form of electricity, and DOE expects the energy savings from the proposed standards to eliminate the need for approximately 1100 to 3400 megawatts (MW) of generating capacity for GSFL and up to 450 MW for IRL by 2042. This would result in cumulative (undiscounted) greenhouse gas emission reductions of 184 to 395 million metric tons (MMT) of carbon dioxide (CO_2) for GSFL and 59 to 114 MMT for IRL from 2012 to 2042. During this same period, the standard would result in power plant emission reductions of 12 to 623 kilotons (kt) of nitrogen oxides (NO_X) for GSFL and 4 to 181 kt NO_X for IRL. Mercury (Hg) emission reductions would be up to 6.9 tons for GFSL and up to 1.7 tons avoided for IRL.

DOE has tentatively concluded that the proposed standards represent the maximum improvement in energy efficiency that is technologically feasible and economically justified, and would result in significant conservation of energy. DOE further notes that products achieving these standard levels are already commercially available. Based upon the rulemaking analyses culminating in this proposal, DOE found that the benefits (energy savings, consumer LCC savings, national NPV increase, and emission reductions) to the Nation of the proposed standards outweigh the burdens (INPV decrease and LCC increases for some lamp users). DOE considered higher efficacy levels (ELs) as trial standard levels (TSLs), and is still considering them in this rulemaking; however, DOE has tentatively concluded that the burdens of the higher efficiency levels outweigh the benefits. Based upon consideration of public comments and related information, DOE may adopt either higher or lower ELs presented in this proposal or some level in between.

II. Introduction

A. Consumer Overview

EPCA currently prescribes efficacy standards for certain IRL and GSFL. (42 U.S.C. 6295(i)(1)) DOE proposes to raise these standards and to set efficacy standards for certain other GSFL, as shown in Table I.1 and Table I.2 above. The proposed standards would apply to products manufactured in the United States, or imported to it, three years after the final rule is published in the **Federal Register**.[1] Table I.1 and Table I.2 also show the percentage improvement in efficacy that each standard level represents, relative to the current standard levels or to products typically on the market today. The proposed standards represent an overall improvement of approximately 4 to 22 percent and 7 to 100 percent in the efficacies of the GSFL and IRL baselines, respectively, covered by the standards.

DOE's analyses suggest that residential and commercial consumers would see benefits from the proposed standards. Although DOE expects that under the proposed standards, the purchase price of high-efficacy GSFL would be higher (up to three times higher) than the average price of these products today, but that the energy efficiency gains would result in lower energy costs that more than offset such higher costs. When the potential savings due to efficiency gains are summed over the lifetime of the high-efficacy products, consumers would be expected to save up to $56.60 (depending on the lamp type), on average, compared to their expenditures on today's baseline GSFL.

The results of DOE's analyses for IRL follow a similar pattern. Although DOE expects the purchase price of the high-efficacy IRL would be higher (ranging from 56 to 63 percent) than the average price of these products today, the energy efficiency gains would result in lower energy costs that more than offset the higher costs. When these potential

[1] The final rule is expected to be published by June 30, 2009; therefore, the effective date would be June 30, 2012.

savings due to efficiency gains are summed over the lifetime of the high-efficacy IRL, it is estimated that consumers would save between $1.62 and $8.14, on average, compared to their expenditures on today's baseline IRL.

B. Authority

Title III of EPCA sets forth a variety of provisions designed to improve energy efficiency. Part A [2] of Title III (42 U.S.C. 6291–6309) established the ''Energy Conservation Program for Consumer Products Other Than Automobiles.'' The program covers consumer products and certain commercial products (referred to hereafter as ''covered products''), including GSFL and IRL. (42 U.S.C. 6292(a)(14) and 6295(i)) EPCA prescribes energy conservation standards for certain GSFL and IRL. (42 U.S.C. 6295(i)(1)) The statute further directs DOE to determine whether the existing standards for fluorescent and incandescent lamps should be amended and whether to adopt standards for additional GSFL. (42 U.S.C. 6295(i)(3)–(5)) This rulemaking represents the first round of amendments to the GSFL and IRL energy conservation standards as directed by 42 U.S.C. 6295(i)(3).

The scope of coverage for these requirements for GSFL and IRL is dictated by EPCA's definitions of these and related terms, as explained below. EPCA defines ''general service fluorescent lamp'' as follows: * * * [F]luorescent lamps which can be used to satisfy the majority of fluorescent applications, but does not include any lamp designed and marketed for the following nongeneral lighting applications: (i) Fluorescent lamps designed to promote plant growth. (ii) Fluorescent lamps specifically designed for cold temperature installations. (iii) Colored fluorescent lamps. (iv) Impact-resistant fluorescent lamps. (v) Reflectorized or aperture lamps. (vi) Fluorescent lamps designed for use in reprographic equipment. (vii) Lamps primarily designed to produce radiation in the ultra-violet region of the spectrum. (viii) Lamps with a color rendering index of 87 or greater. (42 U.S.C. 6291(30)(B))

EPCA defines ''incandescent reflector lamp'' as follows: * * * [A] lamp in which light is produced by a filament heated to incandescence by an electric current * * * [and] (commonly referred to as a reflector lamp) which is not colored or designed for rough or vibration service applications, that contains an inner reflective coating on the outer bulb to direct the light, an R, PAR, ER, BR, BPAR, or similar bulb shapes with E26 medium screw bases, a rated voltage or voltage range that lies at least partially within 115 and 130 volts, a diameter which exceeds 2.25 inches, and has a rated wattage that is 40 watts or higher.

(42 U.S.C. 6291(30)(C), (C)(ii) and (F))

EPCA further clarifies this definition of IRL by defining the lamp types excluded from the definition: The term ''rough service lamp'' means a lamp that—(i) has a minimum of 5 supports with filament configurations that are C–7A, C–11, C–17, and C–22 as listed in Figure 6–12 of the 9th edition of the IESNA Lighting handbook, or similar configurations where lead wires are not counted as supports; and (ii) is designated and marketed specifically for 'rough service' applications, with (I) the designation appearing on the lamp packaging; and (II) marketing materials that identify the lamp as being for rough service. (42 U.S.C. 6291(30)(X))

The term ''vibration service lamp'' means a lamp that—(i) has filament configurations that are C–5, C–7A, or C–9, as listed in Figure 6–12 of the 9th Edition of the IESNA Lighting Handbook or similar configurations; (ii) has a maximum wattage of 60 watts; (iii) is sold at retail in packages of 2 lamps or less; and (iv) is designated and marketed specifically for vibration service or vibration-resistant applications, with—(I) the designation appearing on the lamp packaging; and (II) marketing materials that identify the lamp as being vibration service only. (42 U.S.C. 6291(30)(AA))

The term ''colored incandescent lamp'' means an incandescent lamp designated and marketed as a colored lamp that has—(i) a color rendering index of less than 50, as determined according to the test method given in C.I.E. publication 13.3–1995; or (ii) a correlated color temperature of less than 2,500K, or greater than 4,600K, where correlated temperature is computed according to the Journal of Optical Society of America, Vol. 58, pages 1528–1595 (1986). (42 U.S.C. 6291(30)(EE)) [3]

The advance notice of proposed rulemaking (ANOPR) in this proceeding (73 FR 13620, 13622, 13625, 13628–29 (March 13, 2008)), as well as subsection II.C and section III below, provide additional detail on the nature and statutory history of EPCA's requirements for GSFL and IRL.

Under the Act, DOE's energy conservation program for covered products consists essentially of four parts: (1) Testing; (2) labeling; (3) Federal energy conservation standards, and (4) certification and enforcement procedures. The Federal Trade Commission (FTC) is responsible for labeling, and DOE implements the remainder of the program. Section 323 of the Act authorizes DOE, subject to certain criteria and conditions, to develop test procedures to measure the energy efficiency, energy use, or estimated annual operating cost of each covered product. (42 U.S.C. 6293) The test procedures for GSFL and IRL appear at title 10 Code of Federal Regulations (CFR) part 430, subpart B, appendix R.

EPCA provides criteria for prescribing new or amended energy conservation standards for covered products. As indicated above, any new or amended standard for a covered product under Part A must be designed to achieve the maximum improvement in energy efficiency that is technologically feasible and economically justified (42 U.S.C. 6295(o)(2)(A)), although EPCA precludes DOE from adopting any standard that would not result in significant conservation of energy. (42 U.S.C. 6295(o)(3)(B)) Moreover, DOE may not prescribe a standard: (1) For certain products, including GSFL and IRL, if no test procedure has been established for that type (or class) of product, or (2) if DOE determines by rule that the standard would not result in significant conservation of energy or is not technologically feasible or economically justified. (42 U.S.C. 6295(o)(3)) The Act also provides that, in deciding whether a standard is economically justified, DOE must determine whether the benefits of the standard exceed its burdens. (42 U.S.C. 6295(o)(2)(B)(i)) DOE must do so after receiving comments on the proposed standard and by considering, to the greatest extent practicable, the following seven factors:

(1) The economic impact of the standard on manufacturers and consumers of the products subject to the standard;

(2) The savings in operating costs throughout the estimated average life of the covered products in the type (or class) compared to any increase in the price, initial charges, or maintenance expenses for the covered products that are likely to result from the imposition of the standard;

[2] This part was originally titled Part B; however, it was redesignated Part A after Part B was repealed by Pub. L. 109–58.

[3] DOE notes that the publication year of the referenced article in the definition of ''colored incandescent lamp,'' as printed in section 321(a)(1)(B) of EISA, contains two typographical errors. The citation should read as follows: Journal of Optical Society of America, Vol. 58, pages 1528–1535 (1968).

(3) The total projected amount of energy savings likely to result directly from the imposition of the standard;

(4) Any lessening of the utility or the performance of the covered products likely to result from the imposition of the standard;

(5) The impact of any lessening of competition, as determined in writing by the Attorney General, that is likely to result from the imposition of the standard;

(6) The need for national energy conservation; and

(7) Other factors the Secretary considers relevant. (42 U.S.C. 6295(o)(2)(B)(i)(I)–(VII))

Furthermore, EPCA contains what is commonly known as an ''anti-backsliding'' provision, which mandates that the Secretary not prescribe any amended standard that either increases the maximum allowable energy use or decreases the minimum required energy efficiency of a covered product. (42 U.S.C. 6295(o)(1)) Also, the Secretary may not prescribe an amended or new standard if interested persons have established by a preponderance of evidence that the standard is likely to result in the unavailability in the United States of any covered product type (or class) with performance characteristics (including reliability), features, sizes, capacities, and volumes that are substantially the same as those generally available in the United States. (42 U.S.C. 6295(o)(4))

Under 42 U.S.C. 6295(o)(2)(b)(iii), EPCA establishes a rebuttable presumption that a standard is economically justified if the Secretary finds that ''the additional cost to the consumer of purchasing a product complying with an energy conservation standard level will be less than three times the value of the energy, and as applicable, water, savings during the first year that the consumer will receive as a result of the standard, as calculated under the applicable test procedure. * * *''

Under 42 U.S.C. 6295(q)(1), EPCA sets forth additional requirements applicable to promulgating a standard for a type or class of covered product that has two or more subcategories. DOE must specify a different standard level than that which applies generally to such type or class of products ''for any group of covered products which have the same function or intended use, if * * * products within such group—(A) consume a different kind of energy from that consumed by other covered products within such type (or class); or (B) have a capacity or other performance-related feature which other products within such type (or class) do not have and such feature justifies a higher or lower standard'' than applies or will apply to the other products. *Id.* In determining whether a performance-related feature justifies such a different standard for a group of products, DOE must ''consider such factors as the utility to the consumer of such a feature'' and other factors DOE deems appropriate. *Id.* Any rule prescribing such a standard must include an explanation of the basis on which such higher or lower level was established. (42 U.S.C. 6295(q)(2))

Federal energy efficiency requirements generally supersede State laws or regulations concerning energy conservation testing, labeling, and standards. (42 U.S.C. 6297(a)–(c)) DOE can, however, grant waivers of Federal preemption for particular State laws or regulations, in accordance with the procedures and other provisions of section 327(d) of the Act. (42 U.S.C. 6297(d))

C. Background

1. Current Standards

EPCA prescribes the energy conservation standards that are currently applicable to specified types of GSFL and IRL. More specifically, the standards set efficacy levels and color rendering index (CRI) levels for certain GSFL, and efficacy standards for certain IRL. (42 U.S.C. 6295(i)(1); 10 CFR 430.32(n)) These statutory standard levels are set forth in Table II.1 and Table II.2 below.

TABLE II.1—EPCA STANDARD LEVELS FOR GSFL

Lamp type	Nominal lamp wattage	Minimum CRI	Minimum average efficacy lm/W
4-Foot Medium Bipin	> 35W	69	75.0
	≤ 35W	45	75.0
2-Foot U-Shaped	> 35W	69	68.0
	≤ 35W	45	64.0
8-Foot Slimline	> 65W	69	80.0
	≤ 65W	45	80.0
8-Foot High Output	> 100W	69	80.0
	≤ 100W	45	80.0

TABLE II.2—EPCA STANDARD LEVELS FOR IRL

Wattage	Min. avg. efficacy lm/W
40–50	10.5
51–66	11.0
67–85	12.5
86–115	14.0
116–155	14.5
156–205	15.0

2. History of Standards Rulemaking for General Service Fluorescent Lamps, Incandescent Reflector Lamps, and General Service Incandescent Lamps

As stated above, EPCA established energy conservation standards for certain types of GSFL and IRL. (42 U.S.C. 6295(i)(1)) EPCA also requires that DOE conduct two cycles of rulemakings to determine whether to amend these standards, and that DOE initiate a rulemaking to determine whether to adopt standards for additional types of GSFL. (42 U.S.C. 6295(i)(3)–(5)) This rulemaking addresses both the amendment of existing GSFL and IRL standards, and the adoption of standards for additional GSFL.

DOE initiated this rulemaking on May 31, 2006, by publishing on its Web site its ''Rulemaking Framework Document for General Service Fluorescent Lamps, Incandescent Reflector Lamps, and General Service Incandescent Lamps.'' [4] DOE also published a notice in the **Federal Register** announcing the availability of the framework document

[4] A PDF copy of the framework document published in May 2006 is available at: *http://www/eere.energy.gov/buildings/appliance_standards/residential/pdfs/lamps_framework.pdf.*

and a public meeting on the document, which requested public comments on the matters raised in the framework document. 71 FR 30834 (May 31, 2006). The framework document described the procedural and analytical approaches that DOE anticipated using to evaluate energy conservation standards for the products covered by this rulemaking, and it identified various issues to be resolved in conducting the rulemaking.

DOE held the public meeting on June 15, 2006, to present the framework document, describe the analyses it planned to conduct during the rulemaking, seek comments from stakeholders on these subjects, and inform stakeholders about and facilitate their involvement in the rulemaking. At the public meeting and during the comment period, DOE received many comments that both addressed issues raised in the framework document and identified additional issues relevant to this rulemaking.

As the title of the framework document indicates, DOE initially included general service incandescent lamps (GSIL) in this rulemaking. This was done to address the requirement then present in section 325(i)(5) of EPCA that DOE consider energy conservation standards for additional GSIL. (42 U.S.C. 6295(i)(5)) However, section 321(a)(3)(A)(iii) of the Energy Independence and Security Act of 2007,[5] (EISA 2007) amended EPCA to remove this requirement, thereby eliminating DOE's authority to regulate additional GSIL. Instead, section 321(a)(3)(A)(ii) of EISA 2007 amended EPCA to prescribe energy conservation standards for GSIL. Therefore, this rulemaking no longer addresses GSIL.

DOE issued the ANOPR for this rulemaking on February 21, 2008 and published it in the **Federal Register** on March 13, 2008. 73 FR 13620. On February 22, 2008, DOE posted the ANOPR, as well as the complete ANOPR technical support document (TSD), on its Web site.[6] The TSD includes the results of the following DOE preliminary analyses: (1) Market and technology assessment; (2) screening analysis; (3) engineering analysis; (4) energy use characterization; (5) product price determinations; (6) life-cycle cost (LCC) and pay back period (PBP) analyses; (7) shipments analysis; and (8) national impact analysis (NIA).

In the March 2008 ANOPR, DOE invited comment in particular on the following issues: (1) Consideration of additional GSFL; (2) amended definitions; (3) product classes; (4) scaling to product classes not analyzed; (5) screening of design options; (6) lamp operating hours; (7) energy consumption of GSFL; (8) LCC calculation; (9) installation costs; (10) base-case market-share matrices; (11) shipment forecasts; (12) base-case and standards-case forecasted efficiencies; (13) trial standard levels; and (14) period for lamp production equipment conversion. 73 FR 13620, 13686–88 (March 13, 2008).

In the ANOPR, DOE described and sought comment on the analytical framework, models, and tools (*e.g.*, LCC and national energy savings (NES) spreadsheets) DOE was using to analyze the impacts of energy conservation standards for GSFL and IRL. DOE held a public meeting in Washington, DC, on March 10, 2008, to present the methodologies and results for the March 2008 ANOPR analyses. At this meeting, stakeholders recommended that DOE revise certain analyses in the energy conservation standard ANOPR and the scope of covered products. DOE later received written comments from the National Electrical Manufacturers Association (NEMA). In addition, DOE received a joint comment from several stakeholders. The Joint Comment was submitted by the American Council for an Energy Efficient Economy (ACEEE), Alliance to Save Energy (ASE), Appliance Standards Awareness Project (ASAP), National Consumer Law Center, National Grid, Natural Resources Defense Council (NRDC), Northeast Energy Efficiency Partnerships (NEEP), Northwest Power and Conservation Council (NPCC), Pacific Gas and Electric Company (PG&E), and Vermont Energy Investment Corporation. The comments received since publication of the March 2008 ANOPR and during the March 10, 2008 public meeting have contributed to DOE's proposed resolution of the issues in this rulemaking. This NOPR quotes, summarizes, and responds to the issues raised in these public comments. (A parenthetical reference at the end of a quotation or paraphrase provides the location of the item in the public record.)

Subsequent to the public meeting and at NEMA's request, DOE and NEMA met on June 26, 2008 to discuss appropriate lumens per watt (lm/W) standards for high correlated color temperature (CCT) fluorescent lamps. (DOE, No. 27)[7] NEMA subsequently submitted a written comment documenting its presentation at this meeting (hereafter the ''June 2008 NEMA meeting''). (NEMA, No. 26) Topics covered at this meeting included the expected market share of high-CCT fluorescent lamps, appropriate efficacy standard scaling factors for GSFL with a CCT greater than 4,500K but less than or equal to 7,000K, and coverage of GSFL with a CCT greater than 7,000K. See sections III.C.2, V.A.1.c, and V.C.7.a.i of this notice for a more detailed discussion of NEMA's comments at this meeting, as well as DOE's responses.

III. Issues Affecting the Scope of This Rulemaking

A. Additional General Service Fluorescent Lamps for Which DOE Is Proposing Standards

1. Scope of EPCA Requirement That DOE Consider Standards for Additional Lamps

As discussed above, EPCA established energy conservation standards for certain general service fluorescent lamps, (42 U.S.C. 6295(i)(1)) and directed the Secretary to ''initiate a rulemaking procedure to determine if the standards in effect for fluorescent lamps * * * should be amended so that they would be applicable to additional general service fluorescent [lamps]. * * *'' (42 U.S.C. 6295(i)(5)) Thus, DOE must consider whether to adopt energy efficacy standards for additional GSFL beyond those already covered by the statutorily-prescribed standards.

The March 2008 ANOPR notes that a wide variety of GSFL are not currently covered by energy conservation standards, and they are potential candidates for coverage under 42 U.S.C. 6295(i)(5). 73 FR 13620, 13628–29 (March 13, 2008). However, the requirement that DOE consider additional GSFL appears to conflict with EPCA's definitions of key terms, which it might be argued would preclude coverage of additional GSFL. As explained below, DOE has carefully considered these statutory provisions and is interpreting them in a manner so as to give effect to the requirement to consider additional GSFL.

Specifically, the conflict is centered on the statutory definition of ''general service fluorescent lamp.'' As set forth above and repeated here for purposes of this discussion, ''general service fluorescent lamp'' is defined in 42

[5] Pub. L. 110–140 (enacted Dec. 19, 2007).

[6] PDF copies of the ANOPR and ANOPR TSD published in March 2008 are available at: *http://www1.eere.energy.gov/buildings/appliance_standards/residential/incandescent_lamps_anopr.html.*

[7] A notation in the form ''DOE, No. 27 '' identifies a written comment that DOE has received and has included in the docket of this rulemaking or a written docket submission. This particular notation refers to a comment: (1) Submitted by DOE; and (2) in document number 27 in the docket of this rulemaking.

U.S.C. 6291(30)(B) to mean: ''fluorescent lamps which can be used to satisfy the majority of fluorescent lamp applications, but does not include any lamp designed and marketed for the following nongeneral lighting applications: [list of eight exclusions not relevant to the present issue].''

As such, the term ''general service fluorescent lamp'' appears to be defined by reference to the term ''fluorescent lamp,'' which is also defined under the statute as follows: ''Except as provided in subparagraph (E), the term 'fluorescent lamp' means a low pressure mercury electric-discharge source in which a fluorescing coating transforms some of the ultraviolet energy generated by the mercury discharge into light, including only the following: (i) Any straight-shaped lamp (commonly referred to as 4-foot medium bi-pin lamps) with medium bi-pin bases of nominal overall length of 48 inches and rated wattage of 28 or more. (ii) Any U-shaped lamp (commonly referred to as 2-foot U-shaped lamps) with medium bi-pin bases of nominal overall length between 22 and 25 inches and rated wattage of 28 or more. (iii) Any rapid start lamp (commonly referred to as 8-foot high output lamps) with recessed double contact bases of nominal overall length of 96 inches and 0.800 nominal amperes, as defined in ANSI C78.1–1978 and related supplements. (iv) Any instant start lamp (commonly referred to as 8-foot slimline lamps) with single pin bases of nominal overall length of 96 inches and rated wattage of 52 or more, as defined in ANSI C78.3–1978 (R1984) and related supplement ANSI C78.3a–1985.'' 42 U.S.C. 6291(30)(A) (Emphasis added).

The term ''fluorescent lamp'' is, by its terms, limited to four enumerated types of lamps. Further, the four types of lamps set forth in the definition of ''fluorescent lamp'' have corresponding energy conservation standards prescribed under the statute at 42 U.S.C. 6295(i)(1)(B). Given that the statutory definition of ''fluorescent lamp'' is limited to four specified types of lamps and that the statute prescribes standards for those four lamps, it is not possible to give effect to the congressional directive to consider establishing standards for additional GSFL if the term ''general service fluorescent lamp'' is limited by the definition of ''fluorescent lamp.''

Given this identified conflict, DOE has determined that there is an inherent ambiguity in the statute in terms of how these provisions are to be implemented. In order to move forward with this standards rulemaking, DOE must resolve this legal conundrum.

Although there is no legislative history to clarify this point, there are a number of reasons to believe that Congress did not intend to strictly limit consideration of ''additional'' GSFL. First, Congress adopted both the relevant statutory definitions and the ''additional'' lamps requirement as part of Energy Policy Act of 1992 (EPACT 1992; Pub. L. 102–486). DOE does not believe Congress would intentionally insert a legislative provision that, when read in conjunction with a simultaneously added provision, amounts to a nullity. Second, reading the definition to preclude consideration of additional GSFL would run counter to the energy-saving purposes of EPCA. It is reasonable to assume that Congress would not have intended to limit energy conservation standards to only those technologies available in 1992, but would instead cast a broader net that would achieve energy efficiency improvements in lighting products incorporating newer technologies.

Consequently, DOE interprets these statutory provisions such that, in defining ''general service fluorescent lamp,'' Congress intended to incorporate the term ''fluorescent lamp'' in a broader, more generic sense. DOE understands that the industry routinely refers to ''fluorescent lamps'' as including products in addition to the four enumerated in the statutory definition of that term. In fact, in the March 2008 ANOPR, DOE presented its plan for including additional GSFL for coverage, and did not receive adverse comment. Thus, DOE has determined to read the statutory definition of ''general service fluorescent lamp'' in this broader context.

For these reasons, and for the additional reasons set forth in the March 2008 ANOPR,[8] DOE views ''additional'' GSFL, as that term is used in 42 U.S.C. 6295(i)(5), as lamps that: (1) Meet the technical portion of the statutory definition of ''fluorescent lamp'' (*i.e.*, a low-pressure mercury electric-discharge source in which a fluorescing coating transforms some of the ultraviolet energy generated by the mercury discharge into light) (42 U.S.C. 6291(30)(A)) without restriction to the four specified lamp types in that definition; (2) can be used to satisfy the majority of fluorescent lighting applications (42 U.S.C. 6291(30)(B)); (3) are not within the exclusions from the definition of GSFL specified in 42 U.S.C. 6291(30)(B); and (4) are ones for which EPCA does not prescribe standards. Such an interpretation does not alter the existing statutory provision or standards for ''fluorescent lamps,'' but it does permit DOE to give effect to section 6295(i)(5) of EPCA by expanding the universe of GSFL open to potential regulation. The scope of coverage reflected in this NOPR is in keeping with the interpretation outlined above.

2. Identification of the Additional Lamps for Which DOE Proposes Standards

As set forth more fully in the March 2008 ANOPR, DOE took the following three steps in terms of identifying additional GSFL for which standard setting might be appropriate. DOE first conducted a comprehensive review of the fluorescent lighting market in order to identify particular types of lamps that meet the four criteria above to determine the additional GSFL for which DOE would consider adopting standards. Second, DOE examined each lamp type to determine potential energy savings that energy conservation standards would bring for that lamp. Third, DOE further evaluated selected lamps to determine if such standards would be technologically feasible and economically justified. In carrying out these steps before issuance of the March 2008 ANOPR, DOE considered comments on these issues that it had received previously. 73 FR 13620, 13629–30 (March 13, 2008).

In implementing the first of these three steps, DOE identified the following categories of GSFL as meeting the four criteria for consideration as ''additional'' GSFL under 42 U.S.C. 6295(i)(5):

- 4-foot, medium bipin (MBP), straight-shaped lamps, rated wattage of < 28W;
- 2-foot, medium bipin, U-shaped lamps, rated wattage of < 28W;
- 8-foot, recessed double contact (RDC), rapid start, high output (HO) lamps not defined in ANSI Standard C78.1–1991 [9] or with current other than 0.800 nominal amperes;
- 8-foot single pin (SP), instant start, slimline lamps with a rated wattage ≥ 52, not defined in ANSI Standard C78.3–1991 [10];
- Very high output (VHO) straight-shaped lamps;
- T5 [11] miniature bipin (MiniBP) straight-shaped lamps;
- Additional straight-shaped and U-shaped lamps other than those listed

[8] 73 FR 13620, 13629 (March 13, 2008).

[9] Titled ''for Fluorescent Lamps—Rapid-Start Types—Dimensional and Electrical Characteristics.''

[10] Titled ''for Fluorescent Lamps—Instant-Start and Cold-Cathode Types—Dimensional and Electrical Characteristics.''

[11] T5, T8, T10, and T12 are nomenclature used to refer to tubular fluorescent lamps with diameters of 0.625, 1, 1.25, and 1.5 inches, respectively.

above (*e.g.*, alternate lengths, diameters, or bases); and

• Additional fluorescent lamps with alternate shapes (*e.g.,* circline, pin-based compact fluorescent lamps (CFL)).

73 FR 13620, 13630 (March 13, 2008).

DOE then assessed the potential energy savings of standards for these GSFL (second step) and whether candidate standards for those GSFL would be technologically feasible and economically justified (third step), in order to determine which GSFL to analyze in depth regarding whether, and at what levels, standards would be warranted under the EPCA criteria in 42 U.S.C. 6295(o). DOE's analytical process related to these additional GSFL categories is discussed generally below.

In a review of 4-foot medium bipin lamps, DOE found that the current market lacked any products with a rated wattage below 25W. Therefore, in the March 2008 ANOPR, DOE preliminarily decided not to extend coverage to 4-foot medium bipin lamps below 25W. In the following section, DOE discusses its consideration in the March 2008 ANOPR of possibly regulating lamps with rated wattages less than 28W and greater than or equal to 25W.

Similar to the 4-foot medium bipin lamps, in the March 2008 ANOPR, DOE investigated the potential for regulating 2-foot U-shaped lamps less than 28W. A review of available manufacturer catalogs found no commercially-available products in that category. Therefore, DOE concluded that lowering the minimum wattage threshold of 2-foot U-shaped lamps would likely not result in substantial energy savings and preliminarily decided not to expand coverage to these lamps.

DOE also considered whether to expand coverage to include VHO fluorescent lamps. While VHO lamps consume large amounts of energy, they are commonly used in outdoor applications where high-intensity discharge (HID) lamps are rapidly gaining market share. Further research indicated that shipments of VHO T12 lamps are declining rapidly. Although individually these products have greater per-lamp energy savings than high output or standard output lamps, the total energy savings resulting from regulation would be small and would be expected to decrease over time as these lamps disappear from the market. Therefore, DOE preliminarily decided not to extend coverage to VHO lamps.

In the March 2008 ANOPR, DOE also preliminarily decided not to expand coverage to T5 fluorescent lamps. DOE's initial analysis showed that T5 lamps currently have a relatively small share of the GSFL market, and, therefore, have limited potential to contribute to total energy savings. Although T5 lamps can serve as a substitute for T8 or T12 lamps, DOE found that T5 lamps tend to have higher efficacy. Research showed that the highest efficacy 32W 4-foot medium bipin T8 lamp is 95 lm/W, compared to 104 lm/W for a standard output 4-foot miniature bipin T5 lamps. Thus, DOE stated that excluding T5 lamps from this rulemaking would be unlikely to undermine any energy savings that would result from a T12 and T8 standard, even if the standard caused increased sales of T5 systems

Lastly, DOE preliminarily decided not to extend coverage to fluorescent lamps that had alternate lengths, diameters, bases, or shapes (or a combination thereof) than the lamps specifically mentioned. DOE reasoned that the products it had already selected for coverage represented the significant majority of the GSFL market, and, thus, the bulk of the potential energy savings. Furthermore, DOE tentatively concluded there was limited potential for lamps with miscellaneous lengths and bases to grow in market share, given the constraint of fixture lengths and socket compatibility.

After eliminating the lamps aforementioned lamps from further consideration for the reasons cited above, DOE was left with the following additional GSFL to consider evaluating in depth for potential standards:

• 4-foot, medium bipin lamps with wattages ≥ 25 and < 28;

• 8-foot, recessed double contact (RDC), rapid start, high output (HO) lamps not defined in ANSI Standard C78.1–1991 or with current other than 0.800 nominal amperes;

• 8-foot single pin (SP), instant start, slimline lamps with a rated wattage ≥ 52, not defined in ANSI Standard C78.3–1991;

73 FR 13620, 13632 (March 13, 2008).

As mentioned in the March 2008 ANOPR, DOE explored extending coverage to 4-foot medium bipin lamps with wattages less than 28W. A product review found that manufacturers marketed and sold 25W 4-foot medium bipin T8 fluorescent lamps as replacements for higher wattage 4-foot medium bipin T8 fluorescent lamps. Thus, DOE concluded that lowering the minimum wattage threshold to include these lamps would mitigate the risk of 25W lamps becoming a loophole and would maximize potential energy savings. In addition, as the technology and incremental costs associated with increased efficacy of 25W lamps are similar to their already regulated 28W counterparts, DOE tentatively concluded that standards for these lamps would be technologically feasible and economically justified.

In the March 2008 ANOPR, DOE also preliminarily decided to extend coverage to 8-foot recessed double contact, rapid start, HO lamps not defined in ANSI Standard C78.1–1991. Due to the ampere specification in the definition, the statutory standards covered only T12 8-foot recessed double contact HO lamps, but none of the T8 8-foot recessed double contact HO lamps (which usually have 0.400 nominal amperes). Since the T8 8-foot lamps serve as substitutes for their T12 counterparts, DOE risked losing potential energy savings unless such lamps are also covered by energy conservation standards. Consequently, DOE preliminarily extended coverage to T8, 8-foot recessed double contact HO lamps, thereby adding lamps previously restricted by the 0.800 nominal ampere limitation in the definition of ''general service fluorescent lamp.''

Furthermore, DOE planned to expand coverage to 8-foot recessed double contact, rapid start, high output fluorescent lamps not listed in ANSI Standard C78.1–1991. DOE made this decision because the ANSI standards referenced in DOE regulations were outdated.[12] As new lamps are introduced to the market, it is likely they would not be covered by the 1991 ANSI standard and potentially even the currently most up-to-date standard. Any of these lamps could serve as substitutes for regulated lamps. To maximize energy savings from these standards, DOE extended coverage to 8-foot recessed double contact, rapid start, high output fluorescent lamps not listed in ANSI Standard C78.1–1991.

Because the technologies of T8, 8-foot recessed double contact HO lamps and the 8-foot recessed double contact HO lamps not listed in the ANSI Standard C78.1–1991 were similar to the technologies of their already-regulated T12 counterparts, DOE tentatively concluded that standards for these lamps would meet the statutory criterion of technological feasibility. Preliminary analysis of these lamps in the LCC and NIA demonstrated substantial economic savings. Therefore, DOE tentatively concluded that energy conservation standards for these lamps would be expected to be economically justified.

[12] ANSI Standard C78.1–1991 has been updated and replaced by ANSI Standard C78.81–2005, ''for Electric Lamps—Double Capped Fluorescent Lamps—Electrical and Dimensional Characteristics.''

Similar to 8-foot recessed double contact HO lamps, in the March 2008 ANOPR, DOE considered extending coverage to 8-foot, single pin, instant start, slimline lamps not included in ANSI Standard C78.3–1991 (which includes T8 lamps as well). DOE's preliminary analysis indicated that regulation of these lamps has the potential to achieve substantial energy savings. Therefore, DOE preliminarily decided to expand the scope of energy conservation standard coverage to 8-foot single pin slimline lamps with a rated wattage greater than or equal to 52W not listed in ANSI Standard C78.3–1991. Since the technologies of T8, 8-foot single pin slimline lamps and the 8-foot single pin slimline lamps not listed in ANSI Standard C78.3–1991 are similar to the technologies of their already-regulated counterparts, DOE tentatively concluded that standards for these lamps would be expected to meet the statutory criterion of technological feasibility. Analyses in the LCC and NIA confirmed the potential for substantial economic savings associated with regulation of these lamp types. As a result, in the March 2008 ANOPR, DOE tentatively concluded that energy conservation standards for these lamps would be economically justified.

During and after the public meeting, DOE received numerous verbal and written comments regarding the lamps included in or excluded from coverage in the March 2008 ANOPR. As a general matter, commenters supported DOE's approach for consideration of additional GSFL for coverage by energy conservation standards. However, commenters urged DOE to consider changes in its approach in two areas, specifically coverage of T5 lamps and extension of lamp wattage ranges. Sections III.A.2.a and III.A.2.b of this notice immediately below discuss the submitted comments and DOE's responses.

a. Coverage of T5 Lamps

At the March 2008 ANOPR public meeting, NEMA announced that it was considering supporting coverage of T5 lamps to prevent the introduction of less-efficient T5 lamps into the market, particularly those containing halophosphors. (Public Meeting Transcript, No. 21 at pp. 71–72) [13] ACEEE likewise suggested that DOE should analyze opportunities involving regulation of T5 lamps. (Public Meeting Transcript, No. 21 at p. 73) In its written comments, NEMA stated that it would not oppose covering newer T5 fluorescent lamp technology (*e.g.*, 28W 4-foot T5 lamps), but would not recommend covering older technology (*i.e.*, T5 preheat fluorescent lamps). (NEMA, No. 22 at p. 3) In addition, the Joint Comment stated that DOE should extend coverage to T5 lamps. These organizations argued that if only T8 and T12 lamps are covered by the standard, it could possibly spur market introduction of less-efficient halophosphor T5 lamps with a lower first cost. Such a development would increase the overall market share of T5 lamps and decrease the potential energy savings associated with this rulemaking. (Joint Comment, No. 23 at pp. 2–5)

DOE agrees with these comments. While most T5 lamps are currently more efficient than the T8 and T12 lamps for which they can be substituted, excluding them from energy conservation standards could provide an incentive for less-efficient T5 lamps to enter the market. Such trend would result in increased market share of less-efficient products, thereby creating the potential for significant energy savings losses unless these lamps are regulated. Because this potential substitution effect is a primary criterion which DOE uses to determine coverage for additional GSFL, DOE is proposing in this NOPR to extend coverage to T5 miniature bipin lamps.

DOE researched the market and product availability of T5 lamps and found they exist in a variety of lengths and wattages. Standard T5 lamps include wattages ranging from 14W to 80W, and lengths ranging from nominally 2 feet to 6 feet. DOE's research indicates that the primary driver of T5 market share growth is substitution for currently regulated 4-foot MBP lamps. Therefore, DOE proposes to cover only the nominally 4-foot lengths of T5 miniature bipin lamps. DOE believes that alternate lengths of T5 lamps are not likely to gain significant market share as they are not easily substitutable for 4-foot MBP systems which represent the majority of the total fluorescent market. In addition, interviews with manufacturers and a review of product literature indicate that standard-output (approximately 28W) and high-output (approximately 54W) lamps are the highest volume T5 miniature bipin lamps. In addition to the full-wattage versions of these lamps, DOE has found that reduced-wattage versions of the standard- and high-output T5 lamp (26W and 51W respectively) are available. Therefore, in this NOPR, DOE proposes to extend coverage to 4-foot nominal, straight-shaped, T5 miniature bipin standard output lamps with rated wattages ≥ 26W and to 4-foot nominal, straight-shaped, T5 miniature bipin high output lamps with rated wattages ≥ 51W, as they present the greatest potential for energy savings. DOE estimates potential energy savings from these lamps of up to 2.05 quads over the analysis period (2012 to 2042). Because higher-efficacy versions of some of these lamps are already present in the market, DOE tentatively concludes that standards for these lamps are technologically feasible.

Based on DOE's LCC and NIA analyses, coverage of the T5 lamps discussed above would be economically justified. These analyses show that T5 lamp coverage has the potential to achieve on average $47.03 per standard-output lamp system and $56.60 per high-output lamp system in LCC savings. In addition, DOE's NIA indicates that regulating these lamps could result in an NPV of up to $6.84 billion to the Nation (discounted at 3 percent). See section VI.B.1.a.i and section VI.B.3 of this document and chapters 8 and 11 of the TSD for more details on these results.

b. Extension of Lamp Wattage Ranges

Regarding fluorescent lamp coverage, the Joint Comment suggested that DOE should extend wattage ranges to cover lower-wattage products. (Joint Comment, No. 23 at p. 4) In relevant part, section 123 of EPACT 1992 amended EPCA to establish standards for 4-foot medium bipin lamps of 28W or more. The Joint Comment notes that since that law took effect, ''new products continue to be introduced, and there is an incentive to circumvent standards by producing lamps just outside of the watt range (e.g. the current 25W residential lamp).'' *Id.* NEMA commented that while current standards cover 2-foot U-shaped medium bipin lamps greater than or equal to 28W, new products have been introduced at 25W. (Public Meeting Transcript, No. 21 at p. 73) To prevent this trend from continuing, the Joint Comment recommended substantially lowering watt ranges for GSFL product classes to protect the energy savings that would be accomplished by this rule. If niche products exist in the new range, the Joint Comment expressed a preference for using narrowly drawn exemptions rather than limiting the covered watt range. (Joint Comment, No. 23 at p. 4)

[13] A notation in the form ''Public Meeting Transcript, No. 21 at pp. 71–72'' identifies a written comment that DOE has received and has included in the docket of this rulemaking. This particular notation refers to a comment: (1) Submitted during the public meeting on March 10–11, 2008; (2) in document number 21 in the docket of this rulemaking; and (3) appearing on pages 71 through 72 of the transcript.

DOE agrees with the Joint Comment regarding the appropriateness of extending wattage ranges when commercially-available products exist. As discussed in the March 2008 ANOPR, DOE proposed to extend coverage to 4-foot medium bipin fluorescent lamps with wattages between 25W and 28W. DOE discovered these lamps were being marketed as substitutes for currently regulated lamps subject to the current and amended standards (proposed in this NOPR) on 4-foot medium bipin lamps. Therefore, consistent with that approach, in this NOPR, DOE proposes to extend coverage to 2-foot U-shaped lamps with wattages greater than 25W.

The Joint Comment expressed concern that substitutable products outside the range of covered wattages will emerge in other product classes. It suggested a proactive approach of lowering the watt ranges even further, although no products may currently exist in that range. (Joint Comment, No. 23 at p. 4) While DOE understands the Joint Comment's concern, DOE disagrees with this approach. DOE is required to consider energy conservation standards that are technologically feasible. If a lower wattage lamp does not yet exist, DOE cannot confirm that it would be technologically feasible or economically justified for such a lamp to meet a set energy conservation standard. In addition, lower wattage lamps may provide different lumen outputs, and thereby different utility. Therefore, if DOE were to include these lamps in its coverage without determining if the set energy conservation standard is technologically feasible, DOE could be reducing the utility of covered product or precluding its development entirely. Further, DOE encourages the introduction of lamps at lower wattages. Thus, DOE will only propose to extend wattage ranges for 4-foot medium bipin lamps and 2-foot medium bipin U-shaped lamps to the extent specified in this NOPR.

3. Summary GSFL Lamps to Which DOE Proposes To Extend Coverage

With the exception of the above-discussed comments, DOE received no other input related to coverage of GSFL. In addition, DOE's revised analyses indicate that energy conservation standards for the lamps which DOE preliminarily decided to extend coverage in the March 2008 ANOPR are still expected to be technologically feasible, economically justified, and would result in significant energy savings. Therefore, in summary, DOE is proposing to cover the following additional GSFL:

- 2-foot, medium bipin U-shaped lamps with a rated wattage ≥ 25 and less than < 28;
- 4-foot, medium bipin lamps with a rated wattage ≥ 25 and less than 28;
- 4-foot T5, miniature bipin, straight-shaped, standard output lamps with rated wattage ≥ 26;
- 4-foot T5, miniature bipin, straight-shaped, high output lamps with rated wattage ≥ 51;
- 8-foot recessed double contact, rapid start, HO lamps other than those defined in ANSI Standard C78.1–1991;
- 8-foot recessed double contact, rapid start, HO lamps (other than 0.800 nominal amperes) defined in ANSI Standard C78.1–1991; and
- 8-foot single pin instant start slimline lamps, with a rated wattage ≥ 52, not defined in ANSI Standard C78.3–1991.

B. Exempted Incandescent Reflector Lamps

Section 322(a)(1) of EISA 2007 amended section 321(30)(C)(ii) of EPCA to expand the portion of the definition of ''incandescent lamp'' applicable to incandescent reflector lamps to include lamps with a diameter between 2.25 and 2.75 inches, as well as ER, BR, BPAR, or similar bulb shapes. (42 U.S.C. 6291(30)(C)(ii)) Furthermore, section 322(b) of EISA 2007 incorporates several new exemptions to the IRL standards in the new section 325(i)(1)(C) of EPCA. (42 U.S.C. 6295(i)(1)(C)) These exemptions are as follows: (1) Lamps rated 50 watts or less that are ER30, BR30, BR40, or ER40; (2) lamps rated 65 watts that are BR30, BR40, or ER40 lamps; and (3) R20 incandescent reflector lamps rated 45 watts or less.

At the ANOPR stage, DOE concluded that it does not have the authority to set standards for these lamps, for the following reasons. Although Congress included ER, BR, and small-diameter (less than 2.75 inches) lamps in the definition of an ''incandescent lamp,'' it specifically exempted certain wattages and diameters from the prescribed efficacy standards, thereby indicating Congress's intent not to set standards for those products. Furthermore, DOE's reading of 42 U.S.C. 6295(i)(3), which directs DOE to amend the standards in paragraph (1), led it to believe that DOE's authority to amend the standards does not include the authority to amend the exemptions. Specifically, under 42 U.S.C. 6295(i)(1)(C), ''Exemptions,'' the statute refers to ''the standards specified in subparagraph (B),'' whose title is ''Minimum Standards.'' Therefore, in amending the standards in paragraph (1), under 42 U.S.C. 6295(i)(3), DOE reasoned that it had the authority to change the efficacy values but not the exemptions. Accordingly, DOE conducted its ANOPR analyses under the premise that it could not extend coverage to these statutorily-exempted products.

The Joint Comment argued that by covering these products in EISA 2007, Congress effectively brought them into the Federal standards program and, thus, granted DOE the authority to regulate them. The Joint Comment recommended extending coverage to 65-watt ER and BR lamps. In addition, it encouraged DOE to evaluate standards for ER and BR lamps less than 65 watts and for R20 lamps less than 45 watts. The Joint Comment further contended that by failing to extend coverage to these lamps, DOE is not meeting its obligation to maximize energy savings. The Joint Comment argued that the exempted lamps represent a large, growing market share and are a substitute for products that DOE plans to regulate. The Joint Comment stated that because 65-watt BR lamps represent a low-cost, low-efficacy alternative to the more-efficient products covered by the standards, continued exemptions could decrease the potentially significant energy savings associated with the present rulemaking. (Joint Comment, No. 23 at p. 12–14)

Accompanying the Joint Comment were two legal memoranda from the National Consumer Law Center (NCLC), maintaining that not only does DOE have the authority to regulate ER and BR lamps, but that DOE is obligated to regulate them. NCLC pointed out that with the passage of EISA 2007, Congress included BR and ER lamps that have a ''rated wattage that is 40 watts or higher'' within the definition of ''incandescent lamp'' [EISA 2007, section 322(a), amending 42 U.S.C. 6291(30)(C)] and, thus, included these BR and ER lamps as covered products under 42 U.S.C. 6291(2) and 6292(a)(14). NCLC further contended that the only explanation for Congress adding ER and BR lamps to the definition was to include them among the covered products. (Joint Comment, No. 23 at p. 27) NCLC cited the rulemaking for microwave and electric ovens as an example of a rulemaking in which DOE is considering applying standards to products for which no prescriptive efficiency standards exist. (Joint Comment, No. 23 at p. 28)

Through the initial drafting of this NOPR, DOE adhered to its earlier conclusion that it lacked authority to consider standards for ER, BR, and small-diameter lamps that had been

specifically exempted by Congress. However, after carefully considering the testimony of the February 3, 2009 NOPR public meeting and reexamining the ANOPR public comments on this issue, DOE reexamined its authority under EPCA to amend standards for ER, BR, and small-diameter lamps and has concluded that its earlier view may have been in error. DOE is further considering if it has authority to consider energy conservation standards for ER, BR, and small-diameter lamps for the reasons that follow.

DOE agrees with the Joint Comment, that prior to enactment of EISA 2007 on December 19, 2007, ER, BR, and small-diameter lamps were by definition excluded from coverage under EPCA; however, once EISA 2007 amended the definition of ''incandescent lamp,'' ER, BR, and small-diameter lamps become products by the new definition. (Joint Comment, No. 23 at p. 27) Congress proceeded to expressly exempt certain types of ER, BR, and small-diameter lamps from the statutorily-set IRL standards established by EISA 2007. However, given that these expressly exempted lamp types constitute the overwhelming majority of the ER, BR, and small-diameter lamps market, DOE's original construction of the relevant statutory provisions (as expressed in the ANOPR) would have the effect of once again moving most ER, BR, and small-diameter lamps beyond the reach of energy conservation standards. Accordingly, DOE is reconsidering whether, under 42 U.S.C 6295(i)(3), the directive to amend the standards in paragraph (1) encompasses both the statutory levels and the exemptions to those standards.

As a practical matter, if DOE does conclude that it has authority to establish standards for ER, BR, and small-diameter lamps, it cannot consider such lamps as part of the present rulemaking because it has not conducted the requisite analyses to propose appropriate standard levels. At the same time, DOE does not wish to delay the present rulemaking (and the accompanying energy savings to the Nation) for the sole reason of considering this subset of ER, BR, and small-diameter lamps. The analyses to consider standards for ER, BR, and small-diameter lamps are severable from the analyses underlying the present rulemaking, so separate treatment would not impact the outcomes for any of the lamp types under consideration in this NOPR. Therefore, DOE has decided to proceed with setting energy conservation standards for the lamps that are the subject of the present rulemaking and to commence a separate rulemaking for ER, BR, and small-diameter lamps. DOE believes that much of the analytical work for the current rulemaking will benefit the ER, BR, and small diameter lamps rulemaking, thereby permitting issuance of a new NOPR and final rule on an accelerated basis, if it determined that it has the authority to do so.

For the purposes of the present NOPR, however, DOE notes that the balance of this notice (analyses and related discussions) assumes that the exempted ER, BR, and small-diameter lamps remain unregulated by energy conservation standards. DOE acknowledges that while such an assumption has no impact on the engineering and life-cycle cost analyses, the regulation of these exempted IRL may affect the future shipment of IRL and thereby the national impact and other downstream analyses. However, DOE believes that its analysis of multiple shipment scenarios (as discussed in section V.E.5) captures the broad range of possible impacts were these exempted lamps to be regulated in the future. Therefore DOE's assumption does not impact the standards proposed in this rulemaking or DOE's reconsideration of its authority, nor does it otherwise constrain DOE's ability to conduct further analyses in a separate rulemaking.

C. Amended Definitions

To clarify the scope of EPCA's coverage of GSFL, IRL, and the recently adopted standards for GSIL, DOE proposes to revise its existing definitions of ''rated wattage'' and ''colored fluorescent lamp.'' These definitional changes are discussed below.

1. ''Rated Wattage''

One element of EPCA's definitions for ''fluorescent lamp'' and ''incandescent reflector lamp'' is a lamp's rated wattage, which helps delineate the lamps for which the statute sets standards. (42 U.S.C. 6291(30)(A), (C)(ii) and (F), and 6295(i)). In addition, section 321(a)(3) of EISA 2007 amended EPCA to prescribe energy conservation standards for GSIL, requiring lamps of particular lumen outputs to have certain maximum rated wattages. (42 U.S.C. 6295(i)) However, EPCA does not define the term ''rated wattage.''

DOE has defined ''rated wattage'' in its regulations, but only for 4-foot medium bipin T8, T10, and T12 fluorescent lamps. 10 CFR 430.2. This definition references ANSI Standard C78.1–1991, ''for Fluorescent Lamps—Rapid-Start Types—Dimensional and Electrical Characteristics.'' *Id.* Although EPCA also uses the term ''rated wattage'' to delineate 2-foot U-shaped lamps (42 U.S.C. 6291(30)(A)(ii)), 8-foot slimline lamps, (42 U.S.C. 6291(30)(A)(iv)), and IRL (42 U.S.C. 6291(30)(C)), DOE has not defined ''rated wattage'' for these lamps. In the March 2008 ANOPR, DOE considered revising and updating the definition of ''rated wattage'' to cite the current version of ANSI Standard C78.1–1991, clarify and improve the definition, and apply the revised definition to those lamps for which rated wattage is a key characteristic but is not currently defined by DOE. In response to the March 2008 ANOPR, DOE received one comment regarding the definition of ''rated wattage.'' NEMA commented that it agrees with DOE's revised definition. (NEMA, No. 22 at p. 4).

Therefore, DOE proposes the following definition for ''rated wattage'':

Rated wattage means:

(1) With respect to fluorescent lamps and general service fluorescent lamps:

(i) If the lamp is listed in ANSI C78.81–2005 or ANSI C78.901–2005, the rated wattage of a lamp determined by the lamp designation of Clause 11.1 of ANSI C78.81–2005 or ANSI C78.901–2005;

(ii) If the lamp is a residential straight-shaped lamp, and not listed in ANSI C78.81–2005, the wattage of a lamp when operated on a reference ballast for which the lamp is designed; or

(iii) If the lamp is neither listed in one of the ANSI guides referenced in (1)(i) nor a residential straight-shaped lamp, the wattage of a lamp when measured according to the test procedures outlined in Appendix R to subpart B of this part.

(2) With respect to general service incandescent lamps and incandescent reflector lamps, the wattage measured according to the test procedures outlined in Appendix R to subpart B of this part.

2. ''Colored Fluorescent Lamp''

Colored fluorescent lamps are excluded from EPCA's definition of ''general service fluorescent lamp.'' (42 U.S.C. 6291 (30)(B)(iii)) However, EPCA does not define the term ''colored fluorescent lamp.'' In order to fully define the scope of EPCA's definition of GSFL, DOE currently defines ''colored fluorescent lamp'' as follows:

''Colored fluorescent lamp'' means a fluorescent lamp designated and marketed as a colored lamp, and with either of the following characteristics: a CRI less than 40, as determined according to the method given in CIE Publication 13.2 (10 CFR 430.3), or a correlated color temperature less than 2,500K or greater than 6,600K.

10 CFR 430.2. Because these lamps are not GSFL under EPCA, they are not covered by the standards applicable to GSFL.

The central element of EPCA's definition of ''general service fluorescent lamp'' is that they are fluorescent lamps ''which can be used to satisfy the majority of lighting applications.'' (42 U.S.C. 6291(30)(B)) The exclusions, such as the one for colored lamps, are for lamps designed and marketed for ''non-general lighting applications.'' *Id.* As detailed in the March 2008 ANOPR, DOE became aware of a lamp on the European market that meets the above definition of ''colored fluorescent lamp'' and that is intended for general illumination applications. 73 FR 13620, 13634 (March 13, 2008). Although DOE is unaware of any similar general purpose fluorescent lamps being introduced into the U.S. market, the availability of the European lamp demonstrates the potential for DOE's definition of ''colored fluorescent lamp'' to exclude new products with general service applications from the definition of ''general service fluorescent lamp,'' and thereby from the coverage of standards applicable to GSFL. For this reason, in the March 2008 ANOPR, DOE proposed to revise its definition of ''colored fluorescent lamp'' by adding the following phrase after the words ''colored lamp'': ''and not designed or marketed for general illumination applications.'' *Id.*

In submitted written comments on the ANOPR, NEMA agreed with the proposed revised definition of ''colored fluorescent lamp,'' while noting that DOE will need to give additional consideration to general illumination fluorescent lamps with higher color temperatures. NEMA cited an example of a lamp with a CCT of 8,000K that could be used for both general illumination and specialty applications (NEMA, No. 22 at p. 9). NEMA requested a meeting to discuss this matter in greater detail, since it was performing research related to this topic. (DOE, No. 27) This meeting is subsequently discussed in section II.C.2 of this NOPR.

At the June 2008 NEMA meeting and in its written comments, NEMA recommended that the range of GSFL affected by standards should be increased to 7,000K from the current coverage, which extends to only 6,600K. NEMA believes that lamps with a CCT between 4,500K and 7,000K are growing in popularity and, therefore, energy conservation standards within that range are justifiable (NEMA, No. 26 at pp. 3–4).

NEMA also stated that an efficacy standard would be inappropriate for GSFL with a CCT greater than 7,000K. Because very few GSFL with a CCT greater than 7,000K are commercially available, NEMA argued that it would be impossible to determine whether there would be an appropriate efficacy standard for these lamps that would be technologically feasible. (NEMA, No. 26 at pp. 5–6) NEMA also stated that it is unlikely that exempting these high CCT lamps would increase their sales after a standard, as these lamps are often too ''blue'' for typical consumers. Therefore, NEMA urged DOE to exempt all lamps with a CCT greater than 7,000K from energy conservation standards (NEMA, No. 26 at pp. 3–4).

DOE considered NEMA's input and agrees that because so few of these products with a CCT greater than 7,000K exist in the market, there is not enough information to reliably analyze the performance of currently-available products or the expected performance of emerging products. Manufacturing lamps with CCTs greater than 7,000K would likely require the use of new materials not currently utilized in commonly sold lamps today. In addition, manufacturers may encounter different design trade-offs when developing their products Therefore, DOE is unable to determine whether a particular standard level would be technologically feasible for these lamps.

DOE also agrees that it is appropriate to raise the 6,600K limit to 7,000K in the definition of ''colored fluorescent lamp.'' DOE believes that this amendment would further the statutory objective of maintaining the coverage of GSFL serving general application purposes under DOE's energy conservation standards. Although lamps with CCTs greater than 6,600K and less than 7,000K are not prevalent in the market, DOE's research[14] indicates that manufacturers would likely be able to produce a lamp at 7,000K using the same materials as a 6,500K lamp (a commonly sold lamp). In consideration of the technological similarity between 6,500K and 7,000K lamps, DOE believes that it would be possible to establish technologically feasible efficacy levels for 7,000K lamps.

Therefore, DOE proposes to modify the definition of ''colored fluorescent lamp'' so as to include lamps with CCT less than or equal to 7,000K exclude all lamps with a CCT greater than 7,000K from energy conservation standards. However, DOE notes that NEMA has offered to track the sales of GSFL with a CCT greater than 7,000K in order to determine in the future if energy conservation standards are necessary for these products. (NEMA, No. 26 at p. 4) If these lamp sales show significant growth, and thus the potential for significant energy savings, DOE may consider amending the definition of ''colored fluorescent lamp'' to provide for coverage of these lamps and setting an appropriate energy conservation standard for them in a future rulemaking.

As discussed in the March 2008 ANOPR, the discovery of a fluorescent lamp in the European market with a CCT of 17,000K being marketed for general illumination applications prompted DOE to consider actions to prevent such lamps from becoming a potential loophole to the GSFL energy conservation standard. However, the inherently ''blue'' color of these lamps may prevent widespread adoption as substitutes for standard CCT lamps (*e.g.,* 4,100K). Therefore, DOE no longer considers these lamps to be a potential loophole to standards set forth by this rulemaking. For this reason and because DOE is unable to determine a technologically feasible standard for these lamps, DOE believes that the addition of the phrase ''and not designed or marketed for general illumination applications'' with respect lamps with a CCT greater than 7,000K is no longer necessary.

After incorporating the changes discussed above, DOE proposes the following definition of ''colored fluorescent lamp'' for this notice:

Colored fluorescent lamp means either: (1) A fluorescent lamp designated and marketed as a colored lamp with a CRI less than 40, as determined according to the method set forth in CIE Publication 13.2 (10 CFR 430.3); (2) a fluorescent lamp designed and marketed as a colored lamp with a correlated color temperature (CCT) less than 2,500K; or (3) a fluorescent lamp with a CCT greater than 7,000K.

D. Off Mode and Standby Mode Energy Consumption Standards

Section 310(3) of EISA 2007 amended EPCA to require future energy conservation standards to address standby mode and off mode energy use. Specifically, EPCA, as amended, now requires that, when DOE adopts standards for a covered product after July 1, 2010, DOE must, if justified by the criteria for adoption of standards in 42 U.S.C. 6295(o), incorporate standby mode and off mode energy use into the standard, if feasible, or adopt a separate standard for such energy use for that product. (42 U.S.C. 6295(gg)(3)) DOE

[14] *Ex parte* communication with Edward Yandek of General Electric Company (Dec. 8, 2008) (DOE, No. 29).

notes that although the final rule in this standards rulemaking is scheduled for publication by June 2009 (*i.e.,* before the statutory deadline above), DOE nonetheless undertook a preliminary analysis of the potential for energy savings associated with the regulation of standby mode and off mode in covered lamps. DOE has tentatively determined that current technologies for the GSFL and IRL that are the subjects of this rulemaking do not use a standby mode or off mode, so a determination of the energy consumption of such features is inapplicable.

Given EISA 2007's definitions of ''active mode,'' ''off mode,'' and ''standby mode'' applicable to both GSFL and IRL, in order to meet the definition of ''off-mode'' or ''standby mode,'' the lamp must not be providing any active mode function (*i.e.,* emit light). However, to reach such a state, the lamp must be entirely disconnected from the main power source (*i.e.,* the lamp is switched off), thereby not satisfying the requirements of operating in off mode. In addition, DOE believes that all covered products that meet the definitions of ''general service fluorescent lamp'' and ''incandescent reflector lamp'' are single-function products and do not offer any secondary user-oriented or protective functions. Thus, GSFL and IRL do not satisfy the definition for ''standby mode.'' DOE received comments from NEMA in response to the March 2008 ANOPR supporting this characterization of off mode and standby mode energy consumption for these products. (NEMA, No. 22 at p. 1) Therefore, DOE maintains that it is not feasible to incorporate off mode or standby mode energy use into the energy conservation standards for GSFL and IRL and is not proposing amendments to the standard to address lamp operation in such modes. The March 2008 ANOPR provides additional details that support this conclusion. 73 FR 13620, 13627 (March 13, 2008).

E. Color Rendering Index Standards for General Service Fluorescent Lamps

Existing EPCA standards specify both lumens per watt and CRI levels that products must comply with before entering the market. (42 U.S.C. 6295(i)(1)) At the public meeting and in written comments, NEMA and the Joint Comment suggested that it may be necessary to amend the minimum CRI requirements to prevent the possible emergence of loopholes in the product classes structure and standards levels considered in the March 2008 ANOPR. (Public Meeting Transcript, No. 21 at pp. 82–84, 92, 94; Joint Comment, No. 23 at p. 6; NEMA, No. 22 at p. 4–5)

However, because CRI is not a measure of energy consumption or efficacy, but rather a measure of the color quality of the light, DOE has concluded that it does not have the authority to change the CRI standard, for the reasons that follow. According to 42 U.S.C. 6291(6), ''energy conservation standard'' means either: (1) A performance standard which prescribes a minimum level of energy efficiency or a maximum quantity of energy use; or (2) a design requirement (only for specifically enumerated products). Although CRI is a performance requirement, it is not an energy performance requirement within the meaning of the term ''energy conservation standard.'' Because, in the case of GSFL, DOE has the authority to regulate only energy conservation standards (*i.e.,* energy performance requirements), DOE is not proposing to amend the existing minimum CRI requirements.

IV. General Discussion

A. Test Procedures

DOE's test procedures for fluorescent and incandescent lamps are set forth at 10 CFR part 430, subpart B, appendix R.[15] These test procedures provide detailed instructions for measuring GSFL and IRL performance, as well as performance attributes of GSIL, largely by incorporating several industry standards. Prompted by an earlier NEMA comment (NEMA, No. 12, pp. 2–4) at the Framework stage of the energy conservation standards rulemaking, DOE examined these test procedures and decided to initiate a rulemaking, in parallel with this standards rulemaking, to revise its test procedures for GSFL, IRL, and GSIL (even though, as explained above, GSIL are no longer part of this standards rulemaking). These revisions consist largely of: (1) Referencing the most current versions of several lighting industry standards incorporated by reference; (2) adopting certain technical changes and clarifications; (3) expanding the test procedures to accommodate new classes of lamps subject to extended coverage by either EISA 2007 or this energy conservation standards rulemaking; and (4) addressing standby mode and off mode energy consumption (which were found not to apply to GSFL and IRL), as mandated by EISA 2007.

To this end, DOE published a NOPR that proposed to update the current test procedure's references to industry standards for fluorescent and incandescent lamps. 73 FR 13465 (March 13, 2008) (the test procedure NOPR). The test procedure NOPR also proposed the following: (1) A small number of definitional and procedural modifications to the test procedure to accommodate technological migrations in the GSFL market and approaches DOE is considering in this standards rulemaking (73 FR 13465, 13472–73 (March 13, 2008)); (2) revision of the reporting requirements for GSFL, such that all covered lamp efficacies would be reported with an accuracy to the tenths decimal place (73 FR 13465, 13473 (March 13, 2008)); and (3) adoption of a testing and calculation method for measuring the CCT of fluorescent and incandescent lamps (73 FR 13465, 13473–74 (March 13, 2008)). Please see the March 2008 ANOPR (73 FR 13620, 13627–28 (March 13, 2008)) and the March 2008 test procedure NOPR (73 FR 13465, 13472–74 (March 13, 2008)) for a detailed discussion of these proposals and related matters.

The public meeting for the March 2008 ANOPR also served as a public meeting to present and receive comments on the test procedure NOPR. DOE later received written remarks from NEMA responding to the proposals contained in the test procedure NOPR. (NEMA, No. 16)[16] DOE is considering these comments, and will be publishing a final rule in the near future.

B. Technological Feasibility

1. General

In each standards rulemaking, DOE conducts a screening analysis, which it bases on information it has gathered on all current technology options and prototype designs that could improve the efficiency of the product or equipment that is the subject of the rulemaking. DOE considers a design option to be ''technologically feasible''[17] if it is in the marketplace or if research has progressed to the development of a working prototype.

In consultation with manufacturers, design engineers, and other interested parties, DOE develops a list of design options for consideration in the rulemaking. In the context of the present rulemaking, when determining

[15] ''Uniform Test Method for Measuring Average Lamp Efficiency (LE) and Color Rendering Index (CRI) of Electric Lamps.''

[16] This written comment was submitted to the docket of the test procedure rulemaking (Docket No. EERE–2007–BT–TP–0013; RIN number 1904–AB72).

[17] DOE's regulations set forth the following definition of ''technological feasibility'': ''Technologies incorporated in commercially available products or in working prototypes will be considered technologically feasible.'' 10 CFR 430, subpart C, appendix A, section 4(a)(4)(i).

proposed efficacy levels for GSFL, DOE only considered commercially-available products that can meet or exceed each level. For IRL, trial standard levels 2, 3, 4, and 5 are based on commercially-available products. Although TSL1 is not based on product currently sold in the marketplace, DOE has used a design option (*i.e.*, higher-efficiency gas fills) to model the performance of a higher-efficacy lamp that meets TSL1. DOE received input from manufacturers during interviews to verify that such a design option is technologically feasible. Therefore, DOE has concluded that the all design options to achieve the proposed efficacy levels are technologically feasible.

Once DOE has determined that particular design options are technologically feasible, it evaluates each design option in light of the following criteria: (1) Practicability to manufacture, install, or service; (2) adverse impacts on product utility or availability; and (3) adverse impacts on health or safety. Chapter 4 of the TSD accompanying this notice contains a description of the screening analysis for this rulemaking. Also, see section 0 of this notice for a discussion of the design options DOE considered.

2. Maximum Technologically Feasible Levels

When DOE proposes to adopt or to decline to adopt an amended or new standard for a type (or class) of covered product, as part of the rulemaking process, DOE must ''determine the maximum improvement in energy efficiency or maximum reduction in energy use that is technologically feasible'' for the product. (42 U.S.C. 6295(p)(1)) In response to the ANOPR, stakeholders commented that 42 U.S.C. 6295(o) requires that DOE evaluate the maximum technologically feasible, or ''max-tech,'' potential standard efficiency levels. They assert that because DOE has gathered only technical information based on products available on the market today, it may not have considered those products that are technically feasible but not yet marketed. If such options are available, stakeholders believe DOE should model them as the max-tech efficiency levels. (Joint Comment, No. 23 at p. 19)

DOE researched whether any technologies could improve the efficacy of GSFL lamps currently marketed. DOE found that higher efficacy GSFL could be achieved but require the use of a higher efficiency fill gas composition. More efficient fill gases often include higher molecular weight gases (*e.g.*, krypton) to increase ultraviolet light output, and, thus, visible light output. However, the use of these heavier gases can cause lamp instability, resulting in striations or flickering. Evidence of this effect can be seen with reduced-wattage lamps, which generally incorporate a mixture of krypton and argon gases, versus full-wattage lamps which primarily use only argon. Reduced-wattage lamps are often marketed with several application-limiting performance notes. For example, NEMA stated reduced-wattage lamps can have performance issues in low-temperature applications or when operated on rapid start or dimming ballasts. (NEMA, No. 21 at p. 10) Therefore, DOE did not consider efficacy levels for GSFL that would require the use of higher-efficiency fill gases that would result in reduced utility. DOE was unable to find any higher-efficacy prototypes or commercially-available lamps that provide the same utility and performance required of GSFL. Therefore, DOE has concluded that TSL5 was the maximum technologically feasible level for GSFL.

For IRL, DOE determined that the maximum technologically feasible efficacy level incorporates the highest technologically feasible efficiency reflector, halogen infrared coating, and filament design. From its research, DOE believes that the highest efficiency reflector employs silver, a technology that DOE understands to be proprietary. From discussions with developers of IR coating technology, DOE understands that by modifying the coating pattern and materials used, varying degrees of IR coating efficiencies can be achieved. Finally, altering filament design to obtain the highest temperature filament operation, while maintaining a lifetime similar to the baseline lamp (3,000 hours), would result in the most efficacious filament. Combining all three of these highest efficiency technologies simultaneously results in the maximum technologically feasible level; however, this level is dependent on the use of a proprietary technology (the silver reflector). Because DOE is unaware of any alternate technology pathways to achieve this efficacy level, DOE did not consider it in its analysis. Instead, DOE based the highest efficacy level analyzed for IRL on a commercially-available IRL which employs a silver reflector, an improved (but not most efficient) IR coating, and a filament design that results in a lifetime of 4,200 hours. Although, this commercially-available lamp uses silver technology, DOE believes that there are alternate pathways to achieve this level. A combination of redesigning the filament to achieve higher temperature operation (and thus reducing lifetime to 3,000 hours), employing other non-proprietary high-efficiency reflectors, or applying higher-efficiency IR coatings has the potential to result in an IRL that meets an equivalent efficacy level. For more information regarding these technologies, see chapter 3 of the TSD. Therefore, DOE has concluded that TSL5 is the maximum technologically feasible level for IRL that is not dependent on the use of a proprietary technology.

Table IV.1 and Table IV.2 list the max-tech levels (TSL5 for GSFL and TSL5 for IRL) that DOE determined for this rulemaking.[18]

TABLE IV.1—MAX-TECH LEVELS FOR GSFL

Lamp type	CCT	Max-tech efficiency lm/W
4-Foot Medium Bipin	≤ 4,500K	94
8-Foot Single Pin Slimline	≤ 4,500K	100
8-Foot RDC HO	≤ 4,500K	95
4-Foot T5 SO	≤ 4,500K	108
4-Foot T5 HO	≤ 4,500K	92

[18] As discussed in section V.C, due to scheduling and resource constraints, DOE did not analyze all GSFL and IRL product classes. Instead, DOE chose representative product classes to directly analyze and scaled analytical results to the remaining product classes. Table IV.1 and Table IV.2 present max-tech levels for only analyzed product classes. Classes not analyzed include the 2-foot U-shaped and high-CCT product classes (for GSFL) and the modified spectrum, ≥ 125 volts, and ≤ 2.5 inches diameter product classes (for IRL).

TABLE IV.2—MAX-TECH LEVEL FOR IRL

Lamp type	Diameter	Voltage	Max-tech efficiency lm/W
Standard Spectrum	> 2.5 inches	< 125	$6.9P^{0.27}$ *

* Where P is the rated wattage.

C. Energy Savings

1. Determination of Savings

DOE used its NIA spreadsheets to estimate energy savings from amended standards for the lamps currently covered by standards and from new standards for the remaining additional lamps that are the subject of this rulemaking. (The NIA spreadsheet models are described in section V.E of this notice and in chapter 11 of the TSD.) DOE forecasted energy savings over the period of analysis (beginning in 2012, the year that amended standards would go into effect, and ending in 2042) for each TSL. It quantified the energy savings attributable to amended and new energy conservation standards (*i.e.,* to each TSL) as the difference in energy consumption between the standards case and the base case. The base case represents the forecast of energy consumption in the absence of amended and new mandatory energy conservation standards. The base case considers market demand for more-efficient products. For example, for both GSFL and IRL, DOE models a shift in the base case from covered GSFL and IRL toward emerging technologies such as light emitting diodes (LED). In addition, consistent with current GSFL market trends, DOE models a shift from T12 lamps to higher-efficacy T8 and T5 lamps. For IRL in the commercial sector, the base-case shipments forecast also considers a migration from halogen IRL to higher-efficacy halogen infrared (HIR) lamps. See section 0 of this notice and chapter 10 of the TSD for details.

The NIA spreadsheet models calculate the energy savings in site energy expressed in kilowatt-hours (kWh). Site energy is the energy directly consumed at building sites by GSFL or IRL. DOE reports national energy savings in terms of the source energy savings, which is the savings in the energy that is used to generate and transmit the energy consumed at the site. To convert site energy to source energy, DOE uses annual site-to-source conversion factors based on the version of the National Energy Modeling System (NEMS) that corresponds to Annual Energy Outlook 2008 (*AEO2008).* The conversion factors vary over time because of projected changes in the nation's portfolio of generation sources. DOE estimated that conversion factors remain constant at 2030 values throughout the remainder of the forecast. See chapter 11 of the TSD for details.

2. Significance of Savings

Section 325 of EPCA prohibits DOE from adopting a standard for a covered product if that standard would not result in ''significant'' energy savings. (42 U.S.C. 6295(o)(3)(B)) While the term ''significant'' is not defined in EPCA, the U.S. Court of Appeals, in *Natural Resources Defense Council* v. *Herrington*, 768 F.2d 1355, 1373 (DC Cir. 1985), indicated that Congress intended ''significant'' energy savings in this context to be savings that were not ''genuinely trivial.'' The energy savings for all of the TSLs considered in this rulemaking are nontrivial, and therefore, DOE considers them ''significant'' within the meaning of section 325 of EPCA.

D. Economic Justification

1. Specific Criteria

As noted earlier, EPCA provides seven factors to be evaluated in determining whether an energy conservation standard is economically justified (42 U.S.C. 6295(o)(2)(B)). The following sections discuss how DOE has addressed each of those seven factors in this rulemaking.

a. Economic Impact on Manufacturers and Consumers

To determine the quantitative impacts of a new or amended standard on manufacturers, the economic impact analysis is based on an annual-cash-flow approach. This includes both a short-term assessment—based on the cost and capital requirements during the period between the announcement of a regulation and the regulation's effective start date—and a long-term assessment. The impacts analyzed include INPV (which values the industry on the basis of expected future cash flows), cash flows by year, changes in revenue and income, and other appropriate measures of impact. Second, DOE analyzes and reports the impacts on different types of manufacturers, with particular attention to impacts on small manufacturers. Third, DOE considers the impact of standards on domestic manufacturer employment, manufacturing capacity, plant closures, and loss of capital investment. Finally, DOE takes into account cumulative impacts of different DOE and other regulations on manufacturers.

For consumers, measures of economic impact include the changes in price, LCC, and payback period for each trial standard level. The LCC is one of the seven factors to be considered in determining the economic justification for a new or amended standard. (42 U.S.C. 6295(o)(2)(B)(i)(II))

b. Life-Cycle Costs

The LCC is the sum of the purchase price of a product (including its installation) and the operating expense (including energy and maintenance expenditures) discounted over the lifetime of the product. For each GSFL and IRL product class, DOE calculated both LCC and LCC savings for various efficacy levels. The LCC analysis required a variety of inputs, such as product prices, installation labor costs, electricity prices, annual operating hours, product energy consumption rates, and discount rates.

To characterize variability in electricity pricing, DOE established regional differences in electricity prices. To account for uncertainty and variability in other inputs, such as annual operating hours and discount rates, DOE used a distribution of values with probabilities assigned to each value. Then for each consumer, DOE sampled the values of these inputs from the probability distributions. The analysis produced a range of LCCs. A distinct advantage of this approach is that DOE can identify the percentage of consumers achieving LCC savings due to an increased energy conservation standard, in addition to the average LCC savings. DOE presents only average LCC savings in this NOPR; however, additional details showing the distribution of results can be found in chapter 8 and appendix 8B of the TSD.

In the LCC analysis, DOE also considered several events that would prompt a consumer to purchase a lamp. For GSFL, DOE calculated LCCs for five lamp purchasing events: (1) Lamp failure; (2) standards-induced retrofit;

(3) ballast failure; (4) ballast retrofit; and (5) new construction/renovation. For IRL, DOE calculated LCCs for the lamp failure and new construction/renovation events, as these were the only lamp purchase events deemed applicable to this product type. Because each event may present the consumer with different lamp (or lamp-and-ballast) options and economics, DOE presents the LCC results for several events for each product class in this NOPR. DOE assumed that the consumer purchases the product in 2012 (the effective start date of the standard). For further detail regarding lamp purchasing events and related LCC calculations, see section V.D and chapter 8 of the TSD.

c. Energy Savings

While significant conservation of energy is a separate statutory requirement for adopting an energy conservation standard, EPCA requires DOE, in determining the economic justification of a standard, to consider the total projected energy savings that are expected to result directly from the standard. (42 U.S.C. 6295(o)(2)(B)(i)(III)) DOE used the NES spreadsheet results in its consideration of total projected savings.

d. Lessening of Utility or Performance of Products

In establishing classes of products, and in evaluating design options and the impact of potential standard levels, DOE aimed to develop standards for GSFL and IRL that would not lessen the utility or performance of these products. None of the considered trial standard levels would reduce the utility or performance of the GSFL and IRL under consideration in the rulemaking. (42 U.S.C. 6295(o)(2)(B)(i)(IV))

Since all standard levels for GSFL use full-wattage lamps, rather than requiring a shift to higher-efficacy reduced-wattage lamps (which may have application restrictions), no GSFL efficacy levels reduce the utility or performance of the covered products. For IRL, for all standard levels, there are commercially available IRL with the same utility and performance as the baseline lamps. Therefore, DOE believes that none of the considered trial standard levels would reduce the utility or performance of the IRL under consideration in this rulemaking.

e. Impact of Any Lessening of Competition

EPCA directs DOE to consider any lessening of competition likely to result from standards. It directs the Attorney General to determine the impact, if any, of any lessening of competition likely to result from a proposed standard and to transmit such determination to the Secretary no later than 60 days after the publication of a proposed rule, together with an analysis of the nature and extent of such impact. (42 U.S.C. 6295(o)(2)(B)(i)(V) and (B)(ii)) DOE has transmitted a copy of today's proposed rule to the Attorney General and has requested that the Department of Justice (DOJ) provide its determination on this issue. DOE will address the Attorney General's determination in the final rule.

f. Need of the Nation To Conserve Energy

The non-monetary benefits of the proposed standard are likely to be reflected in improvements to the security and reliability of the Nation's energy system—namely, reductions in the overall demand for energy will result in reduced costs for maintaining the Nation's electricity system. DOE conducts a utility impact analysis to estimate how standards may affect the Nation's needed power generation capacity. This analysis captures the effects of efficiency improvements on electricity consumption by the covered products that are the subject of this rulemaking.

The proposed standard also is likely to result in improvements to the environment. In quantifying these improvements, DOE has defined a range of primary energy conversion factors and associated emission reductions based on the estimated level of power generation displaced by energy conservation standards. DOE reports the environmental effects from each TSL for this equipment in the environmental assessment in the TSD. (42. U.S.C. 6295(o)(2)(B)(i)(VI) and 6316(a))

g. Other Factors

EPCA allows the Secretary of Energy, in determining whether a standard is economically justified, to consider any other factors that the Secretary deems to be relevant. (42 U.S.C. 6295(o)(2)(B)(i)(VII)) Under this provision, DOE considered subgroups of consumers that may be adversely affected by the standards proposed in this rule. Specifically, DOE assessed the impact of standards on low-income consumers, institutions of religious worship, historical facilities, and institutions that serve low-income populations. In considering these subgroups, DOE analyzed variations on electricity prices, operating hours, discount rates, and baseline lamps. See section 0 of this notice for further detail.

2. Rebuttable Presumption

As set forth in section 325(o)(2)(B)(iii) of EPCA, there is a rebuttable presumption that an energy conservation standard is economically justified if the additional cost to the consumer of a product that meets the standard level is less than three times the value of the first-year energy (and, as applicable, water) savings resulting from the standard, as calculated under the applicable DOE test procedure. (42 U.S.C. 6295(o)(2)(B)(iii) and 42 U.S.C. 6316(e)(1)) DOE's LCC and PBP analyses generate values that calculate the payback period for consumers of potential energy conservation standards, which includes, but is not limited to, the three-year payback period contemplated under the rebuttable presumption test discussed above. However, DOE routinely conducts a full economic analysis that considers the full range of impacts, including those to the consumer, manufacturer, Nation, and environment, as required under 42 U.S.C. 6295(o)(2)(B)(i) and 42 U.S.C. 6316(e)(1)). The results of this analysis serve as the basis for DOE to definitively evaluate the economic justification for a potential standard level (thereby supporting or rebutting the results of any preliminary determination of economic justification). Section 0 of this notice addresses the rebuttable-presumption payback calculation.

V. Methodology and Discussion of Comments

A. Product Classes

In general, in evaluating and establishing energy conservation standards, DOE divides covered products into classes by the type of energy used, capacity, or other performance-related features that affect efficiency, and factors such as the utility of the product to users. (42 U.S.C. 6295(q)) DOE normally establishes different energy conservation standards for different product classes based on these criteria.

1. General Service Fluorescent Lamps

In the March 2008 ANOPR, DOE proposed to establish product classes for GSFL based on the following three attributes that have differential utility and affect efficacy: (1) Physical constraints of lamps (*i.e.*, lamp shape and length); (2) lumen package (*i.e.*, standard versus high output); and (3) correlated color temperature. 73 FR 13620, 13636 (March 13, 2008). The following sections summarize and address comments DOE received in response to the GSFL product classes it considered for the March 2008 ANOPR.

DOE received comments related to product classes on three major topics: T12 and T8 lamps, T5 lamps, and correlated color temperature.

a. T12 and T8 Lamps

The physical constraints of the lamp relate to the shape of the lamp (*e.g.*, U-shaped versus linear) and the fact that these lamps could not be substitutes for each other, unless the entire fixture is changed. The lamp shapes provide unique utility because the shapes of these lamps prevent them from being used as replacements, even with a ballast replacement, in a given fixture. However, the shape and geometry of a lamp also impact its efficacy. In the March 2008 ANOPR, DOE acknowledged that a lamp's diameter can affect its efficacy. However, because the utility provided to the end-user is a function of the light output in lumens (which is comparable between T12 and T8 lamps) and not diameter of the bulb, DOE decided not to establish separate product classes for T12 and T8 lamps.

At the public meeting and in its written comments, NEMA stated that separate product classes might be necessary for T8 and T12 lamps. Both NEMA and General Electric (GE) noted that DOE used the 10-percent efficacy differential between 8-foot slimline and 8-foot high output lamps as one reason for establishing their separate product classes. They reasoned that because T8 lamps are at least 10 percent more efficient that T12 lamps, DOE should also split T8 and T12 lamps into separate classes. (Public Meeting Transcript, No. 21 at pp. 82–86; NEMA, No. 22 at p. 5) GE emphasized that because T8 and T12 lamps require different ballasts and because a growing number of new T8 fixtures will not fit T12 lamps, the two are not always suitable replacements and should therefore have separate product classes. GE also expressed concern that it would be impossible to set a single efficacy standard using a lumen-per-watt metric that would be suitable for both T8 and T12 lamps. (Public Meeting Transcript, No. 21 at pp. 88–89)

Conversely, the Joint Comment strongly supported combining T8 and T12 lamps under one product class because the lamps are the same length, use the same lamp holders, and provide the same utility (as measured by lumen package). At the public meeting, ACEEE emphasized that the two lamps compete directly in the marketplace because of their similar performance features. ACEEE also expressed concern that setting product classes based on efficacy could lead to separate standards for any inefficient product. (ACEEE, No. 22 at p. 91) The Joint Comment also stated that the fact that the two lamps use different ballasts is an economic issue, not a utility issue. The Joint Comment noted that large energy savings would be lost if DOE used separate classes because consumers would not migrate to the more efficient T8 lamps—a factor DOE must consider, given its obligation to set standards at the ''maximum improvement in energy efficiency'' that is ''technologically feasible and economically justified.'' (Joint Comment, No. 23 at pp. 4–5)

DOE research shows that T8 lamps are commonly used to replace T12 lamps; this implies that, in this case, lamp diameter does not significantly affect lamp utility. It also illustrates that the lamps share performance features and compete directly in the market. While DOE recognizes that lamp diameter can affect efficacy, lamp efficacy alone is not a criterion DOE uses to establish product classes; to warrant a separate product class, a unique utility feature must be present. As DOE has not identified a unique utility feature of T12 lamps, DOE has decided to combine both T8 and T12 lamps into one product class for each lamp type. However, in response to GE's comment, DOE recognizes that T8 and T12 lamps usually operate on different ballasts. Thus, DOE has structured its analytical tools to consider the impact of standards on consumers of both lamp types. That is, DOE takes the economics of purchasing another ballast into account in its LCC and NIA analyses.

b. T5 Lamps

The Joint Comment stated that T5 lamps (in this rulemaking, referred to as 4-foot miniature bipin lamps) should probably be in the same product class as T8 and T12 lamps because they compete against them in the market. The advocates noted the existence of retrofitting kits for installing T5 lamps into T8 and T12 fixtures, but acknowledged T5 lamps require different lamp holders and are ''too bright to use in direct lighting fixtures.'' The Joint Comment asked DOE to research the pros and cons of including T5 lamps with T8 and T12 lamps. (Joint Comment, No. 23 at p. 5)

Based on its research and consideration of the above comments, DOE has decided to establish a separate product class for 4-foot miniature bipin lamps because their physical constraints prevent them from being used as direct replacements for T8 and T12 lamps in many applications. For example, applications in which consumers cannot change the lamp fixture (from a 4-foot MBP to a 4-foot MiniBP) may not be appropriate for retrofitting to the 4-foot MiniBP system type. As the Joint Comment noted, these lamps require different lamp holders (due to differences in length and base type), and thereby qualify for a separate product class under the previously established ''physical constraints of lamps'' class-setting criteria.

In addition, a lamp's lumen package may result in certain application constraints. Because 4-foot T5 MiniBP lamps have similar total lumen output as 4-foot T8 and T12 MBP lamps over a significantly smaller surface area, T5 lamps are often marketed as too bright for use in direct lighting fixtures. If 4-foot T5 MiniBP lamps were regulated in the same product class as 4-foot MBP lamps, the standard could effectively mandate the use of T5 lamps. To prevent eliminating lamps appropriate for direct lighting applications, DOE believes that 4-foot miniature bipin lamps (T5 lamps) warrant a separate product class from 4-foot medium bipin lamps (primarily T8 and T12 lamps).

In researching these lamp types, DOE found that the high output lamp is rated to emit more than one and a half times the number of lumens as the standard output lamp, also potentially affecting utility. In general, lamps that have high lumen output may be installed in certain high-ceiling or outdoor installations, where large quantities of light are needed. Lamps that have standard levels of light output might be installed in lower-ceiling installations such as offices or hospitals, where distance between the light source and the illuminated surfaces is not as large. DOE also found that this significant lumen output differential in standard output and high output T5 lamps is accompanied by an efficacy difference. Considering the differences in utility (light output and their applicability in direct lighting fixtures) and efficacy, and consistent with DOE's approach in the March 2008 ANOPR, DOE is proposing separate product classes for standard output 4-foot miniature bipin lamps and high output 4-foot miniature bipin lamps.

c. Correlated Color Temperature

Correlated color temperature is a measure of the perceived color of the white light emitted from a lamp, which DOE believes affects lamp utility. Generally, as CCT increases, efficacy of the bulb decreases. The measured efficacy of lamps with different CCT is different because efficacy is measured in lumens per watt, and light emitted across the visible spectrum is not given equal weighting under this metric. Lumens are determined using the

human eye's sensitivity function, and due to the fact that the human eye is less responsive to blue light, those fluorescent lamps that shift their spectral emission profiles to contain more blue light will have lower efficacies. In the March 2008 ANOPR, DOE established two product classes for GSFL based on CCT: one for high-color-temperature lamps greater than 4,500K, and another for lamps less than 4,500K.

At the public meeting and in its written comments, NEMA agreed with DOE's decision to establish two product classes based on CCT. However, at the public meeting NEMA noted additional divisions may be necessary at higher CCT levels because these lamps—NEMA specifically noted an 8,000K lamp—are capturing an increasing market share of general service applications. (Public Meeting Transcript, No. 21 at pp. 95–97) Industrial Ecology stated that lamps around 6,500K, which were once reserved for specialty applications, are increasingly being used in general service applications. Industrial Ecology argued that such a trend supports the idea of another product class above the 4,500K division. (Public Meeting Transcript, No. 21 at pp. 97–98).

At the June 2008 NEMA meeting and in a written comment, NEMA commented that growth in higher CCT lamps would likely come at the 5,000K level, although they would remain a relatively small portion of the general service market for the foreseeable future. Lamps with CCTs greater than 7,000K represent a very small portion of the general service market because most consumers consider their light to be too blue. Given the small market for lamps above 7,000K, NEMA stated it had very little practical production data related to efficacies and costs. Therefore, NEMA argued, lamps above 7,000K should be exempt from standards, especially considering that the current energy savings potential from their coverage is very small and unlikely to grow anytime soon. (NEMA, No. 26 at pp. 3–4)

NEMA also commented that an equation using a continuous function (without discontinuities) is inappropriate when developing an efficacy standard for GSFL based on CCT. According to NEMA, practical lamp designs used to develop higher CCT lamps—such as phosphor design, weight and coating formulation, and coating adherence—do not provide for a general physical equation that yields an optimum lumens-per-watt standard. Instead, NEMA stated that successive step function factors need to be applied as CCT continues to increase. (NEMA, No. 26 at p. 5) The Joint Comment said that DOE should design CCT product class divisions carefully to prevent ''gaming.'' The advocates preferred a continuous function to multiple product class divisions because the latter would encourage products to migrate to the lowest CCT value in each product class. If a continuous function were not possible, the Joint Comment strongly recommended raising the 4,500K division to 4,900K. Additionally, the Joint Comment stated, if DOE does set a product class aimed at regulating the 8,000K lamps, the boundary should be approximately 7,900K. (Joint Comment, No. 23 at pp. 5–6)

As noted above, DOE believes CCT affects consumer utility. For example, a lighting designer would likely consider the bluish color of higher color temperature lamps when specifying a luminaire for a particular application. In addition, as NEMA stated, higher CCT lamps are sometimes used for spectrally-enhanced lighting (SEL).[19] Advocates of spectrally-enhanced lighting believe that lamps with a higher CCT can help save energy and may also have health benefits. (NEMA, No. 26 at pp. 2–3) However, DOE notes that although spectrally-enhanced lighting has benefits, higher CCT lamps do emit a different color light that may not be appropriate for all applications. Given the effect on utility and the fact that lamp efficacy usually decreases with higher color temperatures, it is appropriate to establish different product classes based on CCT.

DOE agrees that a continuous function is not possible because increasing the CCT does not lead to proportional reductions in lumens per watt. This occurs because design factors that do not have a linear relationship with lumens per watt, such as rare earth phosphor mix and reformulation, must be employed to maintain efficacy, particularly as CCT increases.

DOE disagrees that a 4,900K division should be used rather than the proposed 4,500K division. If DOE were to use a 4,900K division and manufacturers introduced a 4,850K lamp to the market, it would be subject to standards based on the performance of a 4,100k lamp, which might be difficult to meet, as 4,100K lamps are generally more efficacious than their higher CCT counterparts. Likewise, if DOE used a 4,200K division and manufacturers developed a 4,300K lamp for commercial use, it would be subject to potentially lower standards based on the performance of a 5,000k lamp. This may result in a significant loss in potential energy savings. Instead, DOE proposes to use a 4,500K division, which effectively represents the midpoint between the most common commercially available ''warmer'' and ''cooler'' lamps at 4,100K and 5,000K, respectively. By establishing the product class division at the midpoint, DOE ensures that it is establishing a structure that will not subject lamps to inappropriately high standards and also not result in the loss of potential energy savings.

DOE also disagrees with the Joint Comment's argument for a third product class division around 7,900K aimed at 8,000K lamps. As discussed in section III.C.2, DOE is amending its definition of ''colored fluorescent lamp,'' such that these lamps above 7,000K would be excluded from coverage by energy conservation standards. In consideration of this exclusion, DOE feels that is unnecessary to establish a third product class for lamps with a CCT greater than 7,900K.

2. Incandescent Reflector Lamps

In the March 2008 ANOPR, DOE considered product classes for IRL based on the standard-spectrum and modified-spectrum of the lamp. DOE received numerous comments regarding establishing separate product classes for: (1) Modified-spectrum lamps; (2) long-life lamps; (3) lamp diameter; and (4) voltage. The following sections summarize and address these comments.

a. Modified-Spectrum Lamps

Modified-spectrum lamps provide a unique performance-related feature to consumers, in that they offer a different spectrum of light from the typical incandescent lamp, much like two fluorescent lamps with different CCT values. These lamps offer the same benefits as fluorescent lamps with ''cooler'' CCTs, in that they may ensure better color discrimination and often appear more similar to natural daylight, possibly resulting in psychological benefits.[20] In addition to providing a unique performance feature, DOE also understands that the technologies that modify the spectral emission from these lamps also decrease their efficacy because a portion of the light emission

[19] DOE has conducted several studies on SEL examining whether a significant amount of energy can be saved by using lamps that have less light output, but higher CCT. Lamps with higher CCT appear brighter than those with lower CCT, so the actual light output of higher-CCT lamps can be decreased, while maintaining equivalent perceived brightness and visual acuity. More information on spectrally enhanced lighting is available at: *http://www1.eere.energy.gov/buildings/spectrally_enhanced.html.*

[20] ''Full Spectrum Q&A,'' National Lighting Product Information Program, Vol. 7 Issue 5 (March 2005). Available at: *http://www.lrc.rpi.edu/programs/nlpip/lightingAnswers/fullSpectrum.*

is absorbed by the coating. NEMA and GE supported establishing separate product classes for modified-spectrum lamps. (Public Meeting Transcript, No. 21 at p. 105; NEMA, No. 22 at p. 6).

However, the Joint Comment stated that separate product classes are unnecessary because modified-spectrum products which meet all efficacy levels DOE considered in the ANOPR already exist in the market place. The Joint Comment further argued that additive methods, used for some non-IRL technologies, boost particular visible wavelengths of light to achieve a modified spectrum. These methods represent a more efficient way to achieve a modified spectrum than subtractive methods commonly used for IRL, which filter particular visible wavelengths of light. Therefore, according to the Joint Comment, establishing a separate product class could reduce energy savings because modified-spectrum technology would be subject to a needlessly lower standard. The Joint Comment contended that such a situation would run counter to the rulemaking's goals. (Joint Comment, No. 23 at pp. 14–15) At the public meeting, ACEEE and PG&E questioned whether consumers receive additional utility from modified-spectrum lamps, and, if they do, whether it is sufficient to warrant a separate product class. ACEEE and PG&E suggested DOE analyze the energy savings that could be lost with a separate product class. PG&E further noted that consumers could obtain any additional utility that modified-spectrum lamps provide from other available light sources. (Public Meeting Transcript, No. 21 at pp. 101–103) PG&E commented that modified-spectrum lamps occupy significant retail shelf space, which suggests they have a significant market share, and therefore, present a significant energy savings opportunity. (Public Meeting Transcript, No. 21 at p. 104)

DOE maintains that modified-spectrum lamps provide a unique performance-related feature (a different spectrum of light from the typical incandescent lamp) that standard spectrum lamps do not provide. However, the coatings used for modified-spectrum IRL absorb light output, thus reducing the lamps' efficacies. Given the reduction in efficacy, DOE believes that some modified-spectrum lamps may not be able to meet standards if subjected to the same levels as standard-spectrum lamps. That, in turn, could cause the unavailability of such products, thereby eliminating this performance-related feature from the IRL market. DOE notes that the statute directs DOE to maintain performance-related features for a covered product type. (42 U.S.C. 6295(o)(4))

Regarding the Joint Comment's argument that higher-efficiency, additive technologies may be substituted for subtractive technologies currently used in modified-spectrum IRL lamps, DOE is unaware of any commercially-available IRL or working IRL prototype that employs these additive technologies. Although modified-spectrum LED products may be available, because DOE has determined that modified-spectrum lamps provide a unique performance-related feature, it is unable to subject them to standards that would result in the elimination of such IRL products from the market. Thus, DOE believes it is appropriate to establish a separate product class for modified-spectrum lamps based on their unique performance feature and the impact of this performance feature on product efficacy.

b. Long-Life Lamps

DOE received several comments regarding IRL with long lifetimes. At the public meeting, NEMA commented that lamp life is a top consideration for the lighting industry's customers, particularly large retailers. NEMA stated in its written comments that the current long-life lamps on the market might be jeopardized by the proposed standard levels, which could cause manufacturers to reduce lamp life to increase efficacy—a scenario not necessarily in the market's interest. (Public Meeting Transcript, No. 21 at pp. 177–178; NEMA, No. 22 at p. 17) Although NEMA did not explicitly request a separate product class, the Joint Comment argued that DOE should not establish a separate product class for long-life lamps, noting that other existing lamp types, including halogen infrared reflector lamps and CFLs, could adequately serve long-life applications. In support of their position, the advocates stated further that Congress did not establish a separate class for ''long life'' general service incandescent lamps. (Joint Comment, No. 23 at p. 15)

DOE considers lifetime an economic issue rather than a utility issue, and accounts for lifetime in its LCC and NPV calculations. Lifetime is not considered a utility issue because it does not change the light output of the lamp. As such, DOE did not establish a separate product class based on lamp lifetime. For more details, see the engineering analysis in section V.C.4.b and chapter 5 of the TSD.

c. Lamp Diameter

In its written comments, NEMA noted that smaller diameter lamps—specifically, PAR20 lamps—are inherently less efficient than larger diameter IRL. Manufacturing PAR20 lamps to be compliant with the same efficacy standards as larger lamps would be very difficult. NEMA also commented that the technology options available to larger lamps are not necessarily applicable to PAR20 lamps. For example, the most efficient double-ended infrared halogen burner is difficult to use in PAR20 lamps because of mounting considerations. (NEMA, No. 22 at p. 17)

In response, DOE believes that the IRL diameter provides a distinct utility to the consumer (such as the ability of reduced diameter lamps to be installed in smaller fixtures) and recognizes that efficacy declines with a smaller lamp diameter. A smaller diameter lamp has an inherently lower optical efficiency than a larger diameter lamp given a similar filament size. Therefore, DOE is proposing to establish separate product classes for lamps with a diameter of 2.5 inches or less and lamps with a diameter greater than 2.5 inches.

d. Voltage

In its written comments, NEMA mentioned that DOE's proposed product classes and standards do not address how the market actually uses 130 volt (V) lamps, which represent a sizable portion of standard halogen product sales. NEMA stated that customers almost always operate these 130V lamps at 120V (normal line voltage), which doubles their lifetime but reduces their efficacy below standard levels. (NEMA, No. 22 at p. 16)

DOE agrees with NEMA and is concerned that the operation of 130V lamps at 120V has the potential to significantly affect energy savings. When operated under 120V conditions, lamps rated at 130V in compliance with existing IRL efficacy standards are generally less efficacious than lamps using equivalent technology rated at 120V. Because of this inherent difference in efficacy, it may be less costly to manufacture a lamp rated at 130V and tested at 130V that complies with a standard than a similar 120V lamp complying with the same standard. For example, if DOE were to adopt a minimum efficacy requirement that would effectively require HIR technology for 120V lamps, due to differences in the test procedures for lamps rated at 130V, a 130V lamp may only need to employ an improved halogen technology, which would be

less costly. If DOE does not establish a separate standard for lamps rated at 130V, more consumers may purchase 130V lamps because they are less expensive. When consumers operate these lamps at 120V, in order to obtain sufficient light output, they may use more energy than standards-compliant 120V lamps. This practice would increase energy consumption and result in lamps operating with a lower efficacy than any cost-justified standard level. Therefore, to preserve the energy savings intended by these standards, DOE is proposing to establish two separate product classes: (1) Lamps with a rated voltage less than 125V, and (2) lamps with a rated voltage greater than or equal to 125V.

DOE recognizes that there are other possible approaches for addressing this issue of the operational efficacy of 130V lamps. One alternative approach would be that DOE could require all IRL to be tested at 120V, the most common application voltage in the market. DOE requests comment on this issue.

B. Screening Analysis

DOE uses the following four screening criteria to determine which design options are unsuitable for further consideration in the rulemaking:

(1) *Technological Feasibility*. DOE will consider technologies incorporated in commercial products or in working prototypes to be technologically feasible.

(2) *Practicability to Manufacture, Install, and Service*. If mass production and reliable installation and servicing of a technology in commercial products could be achieved on the scale necessary to serve the relevant market at the time the standard comes into effect, then DOE will consider that technology practicable to manufacture, install, and service.

(3) *Adverse Impacts on Product Utility or Product Availability*. If DOE determines a technology would have significant adverse impact on the utility of the product to significant subgroups of consumers, or would result in the unavailability of any covered product type with performance characteristics (including reliability), features, sizes, capacities, and volumes that are substantially the same as products generally available in the United States at the time, it will not consider this technology further.

(4) *Adverse Impacts on Health or Safety*. If DOE determines that a technology will have significant adverse impacts on health or safety, it will not consider this technology further.

10 CFR part 430, subpart C, appendix A, (4)(a)(4) and (5)(b).

Considering these criteria, DOE compiled a list of design options in the March 2008 ANOPR that could be used to increase the efficacy of GSFL and IRL lamps (Table V.1). 73 FR 13620, 13644 (March 13, 2008).

TABLE V.1—GSFL AND IRL DESIGN OPTIONS

GSFL design options	IRL design options
Highly emissive electrode coatings	Higher temperature operation.
Higher efficiency lamp fill gas composition	Thinner filaments.
Higher efficiency phosphors	Efficient filament coiling.
Glass coatings	Efficient filament orientation.
Higher efficiency lamp diameter	Higher efficiency inert fill gas.
	Tungsten-halogen lamps.
	Higher pressure tungsten-halogen lamps.
	Infrared glass coatings.
	Higher efficiency reflector coatings.
	Efficient filament placement.

DOE received a number of comments in response to its list of proposed design options, as discussed below.

1. General Service Fluorescent Lamps

NEMA generally agreed with the list of design options, but mentioned that for GSFL, further efficacy improvement will likely come from improved system (lamp-ballast-luminaire) combinations, and urged DOE to aim in future rulemakings to improve overall systems. (NEMA, No. 22 at p. 9; Public Meeting Transcript, No. 21 at pp. 108–109)

DOE understands that the fluorescent lamp is only one part of a fluorescent lamp system, which also includes ballasts and fixtures. However, DOE does not have the authority to regulate a fluorescent lamp system. EPCA prescribes energy conservation standards for certain GSFL (42 U.S.C. 6295(i)(1)(B)) and fluorescent lamp ballasts. (42 U.S.C. 6295(g)(7)) EPCA does not contain any standards for fluorescent lamp systems. Since EPCA directs DOE to amend only the existing standards for GSFL and fluorescent lamp ballasts, DOE has concluded that it does not have the authority to set energy conservation standards for fluorescent lamp systems. DOE believes other approaches, such as building codes, are more appropriate for regulating a fluorescent lamp system.

a. Higher-Efficiency Lamp Fill Gas Composition

NEMA commented that fill gas mixes are already in use in both T12 and T8 reduced-wattage energy savings lamps. NEMA stated that lamps could be manufactured using even higher efficiency fill gas compositions; however, the actual achieved lumen levels may be unacceptable to the market. NEMA also commented that most manufacturers identify several application-limiting issues for both T8 and T12 reduced-wattage energy saving lamps. (NEMA, No. 22 at pp. 7, 11–12)

DOE agrees that using fill gas composition in reduced-wattage lamps can lead to lamps with limited utility. For example, when marketed, many reduced wattage lamps are not recommended to be used under low lamp ambient temperatures or in drafty locations and on dimming ballasts. These situations could result in lamp starting or stabilization problems, striation (alternating light and dark bands), pulsing or a reduction in light output. Therefore, although DOE incorporates reduced-wattage lamps into the LCC and NIA (as they are viable and likely choices for most GSFL applications), DOE does not consider any efficacy level that would force consumers to purchase these lamps. See section V.C.4.a for details.

b. Higher-Efficiency Phosphors

NEMA commented that rare earth phosphors are already at nearly 100 percent quantum efficiency.[21] While slight improvements in efficacy are

[21] "Quantum efficiency," in this context, is used to quantify the percentage of ultraviolet photons absorbed by the phosphor that are then reemitted as visible photons.

possible with a thicker phosphor coating, NEMA argued that using this option will disproportionately increase lamp costs vis-à-vis the performance improvement. NEMA stated that the opportunities for performance improvement using phosphors ''lie in tailoring phosphor blends and color temperatures to optimize appropriate light sources for specific applications.'' (NEMA, No. 22 at p. 7)

While DOE agrees that thicker phosphor coats may increase cost, DOE does not consider increased costs in the screening analysis. DOE considers potential cost increases in its economic analyses. In addition, many higher-efficiency GSFL incorporate varying thicknesses of rare earth phosphors, or blends of halophosphors and rare earth phosphors. These lamps, more efficacious than their pure halophosphor counterparts, show that using higher-efficiency phosphors is a valid design option that meets all of the screening criteria. Therefore, DOE believes there is room for significant efficacy improvement potential with this design option and, thus, continued to carry it forward in its analyses.

c. Glass Coating

NEMA commented that higher-efficiency lamps already use glass coatings. NEMA also stated that while opportunities exist to improve this technology, manufacturers need to balance costs and performance. (NEMA, No. 22 at p. 7) DOE recognizes that costs may increase with this technology option, but as stated earlier, DOE does not consider the impacts of cost in its screening analysis. Therefore, DOE has included glass coatings as a design option for GSFL, where prototypes or commercially-available products exist.

d. Lamp Diameter

NEMA commented that lamp diameter is already used to optimize luminaire optics and system efficacy, but not to improve lamp efficacy. According to NEMA, further improvements in performance can come from new luminaire designs based on different diameter lamps, but will be limited by lumen packages and the distance between the light source and the luminaire surfaces. (NEMA, No. 22 at p. 7)

In response to this comment, DOE only considered lamp diameter as a design option in the migration from T12 to T8 lamps. DOE's research indicates that T8 lamps are common replacements for T12 lamps. Although the total lumen output of T8 lamps is often lower than that of T12 lamps, these differences in lumen outputs (on the order of 10 percent) do not seem to be significant enough to affect consumer utility. Conversely, although the total lumen output of 4-foot T5 MiniBP lamps can be similar to 4-foot T8 MBP and 4-foot T12 MBP lamps, the lumen output is emitted from a more concentrated light source. DOE's research indicates that T5 lamps' higher light concentrations (and therefore brightness) may require greater distances between the light source and illuminated surfaces. Due to this limitation in utility, DOE did not consider migration to a lamp diameter associated with T5 lamps to be a design option to improve the efficacy of T8 and T12 lamps.

e. Multi-Photon Phosphors

NEMA commented that although commercial multi-photon phosphors are theoretically possible, they have yet to be developed, despite 30 to 40 years of research. (NEMA, No. 22 at p. 7) As explained in chapter 3 of the TSD, because multi-photon phosphors emit more than one visible photon for each incident ultraviolet photon, a lamp would be able to emit more light for the same amount of power, thereby increasing efficacy. DOE agrees that this technology is not sufficiently mature as to warrant further analysis, so DOE has screened out this technology option in the March 2008 ANOPR.

2. Incandescent Reflector Lamps

NEMA does not believe that xenon, a higher-efficiency inert fill gas, should be considered a design option because there is a limited supply of this gas and prices are increasing rapidly. (NEMA, No. 22 at p. 8; Public Meeting Transcript, No. 21 at pp. 108–109)

Although price is not considered in the screening criteria, DOE did conduct an in-depth market assessment of the supply of xenon, and the potential impact of xenon supply limitations on IRL standard levels. DOE determined that although xenon is a rare gas, its supply is sufficiently large to incorporate into all IRL and that the xenon supply would not affect IRL product availability. A more detailed analysis of xenon and its availability can be found in appendix 3B of the TSD.

C. Engineering Analysis

For each product class, the engineering analysis identifies potential, increasing efficacy levels above the level of the baseline model. Those technologies not eliminated in the screening analysis (design options) are inputs to this process. Design options consist of discrete technologies (*e.g.,* infrared reflective coatings, rare-earth phosphor mixes). As detailed in the March 2008 ANOPR, to ensure that efficacy levels analyzed are technologically feasible, DOE concentrated its efforts on developing product efficacy levels associated with ''lamp designs,'' based upon commercially-available lamps that incorporate a range of design options in the engineering analysis. 73 FR 13620, 13645 (March 13, 2008). However, when necessary, DOE supplemented commercially available product information with an examination of the improved performance attributable to discrete technologies so that a substitute lamp at each efficacy level would be available for each baseline lamp.

In energy conservation standard rulemakings for other products, DOE often develops cost-efficiency relationships in the engineering analysis. However, for this lamps rulemaking, DOE derived efficacy levels in the engineering analysis and end-user prices in the product price determination. By combining the results of the engineering analysis and the product price determination, DOE derived typical inputs for use in the LCC and NIA. See the chapter 7 of the TSD for further details on the product price determination.

1. Approach

For the NOPR, DOE is using the same methodology for the engineering analysis that was detailed in the March 2008 ANOPR. 73 FR 13620, 13645–46 (March 13, 2008). The following is a summary of the steps taken in the engineering analysis:

- Step 1: Select Representative Product Classes
- Step 2: Select Baseline Lamps
- Step 3: Identify Lamp or Lamp-and-Ballast Designs
- Step 4: Develop Efficiency Levels.

A more detailed discussion of the methodology DOE followed to perform the engineering analysis can be found in the engineering analysis chapter of the TSD (chapter 5).

2. Representative Product Classes

As discussed in section 0 of this notice, DOE proposes establishing several product classes for GSFL and IRL. DOE proposes eight product classes across the range of covered GSFL based on utility and performance features, such as: (1) Physical constraints of lamps (*i.e.,* lamp shape and length); (2) lumen package (*i.e.*, standard versus high output); and (3) correlated color temperature. For IRL, DOE proposes eight product classes based on spectrum, lamp diameter, and rated

voltage. As detailed in the March 2008 ANOPR, due to scheduling and resource constraints, DOE was not able to analyze each and every product class. 73 FR 13620, 13646 (March 13, 2008). Instead, DOE carefully selected certain product classes to analyze, and then scaled its analytical findings for those representative product classes to other product classes that were not analyzed. 73 FR 13620, 13652 (March 13, 2008). While DOE received several stakeholder comments regarding methods of scaling to product classes not analyzed (discussed in section V.C.7), DOE did not receive objections to the decision to scale to certain product classes and the representative product classes chosen in the March 2008 ANOPR.

For the NOPR, similar to its approach in the March 2008 ANOPR, DOE continued to analyze 4-foot medium bipin, 8-foot single pin slimline, and 8-foot recessed double-contact high output GSFL product classes with CCTs less than or equal to 4,500K. DOE did not explicitly analyze U-shaped lamps, but instead scaled the results of the 4-foot medium bipin class analysis. In addition, DOE has decided to analyze 4-foot T5 miniature bipin standard output lamps and 4-foot T5 miniature bipin high output lamps with CCTs less than or equal to 4,500K as representative product classes.

As discussed in section A.2, DOE chose to subdivide IRL into eight product classes with three subdivisions: (1) High versus low voltage; (2) large versus small diameter lamps; and (3) modified spectrum versus standard spectrum. As detailed in the March 2008 ANOPR, DOE chose to analyze the standard-spectrum incandescent reflector product class because standard-spectrum lamps are more common than modified-spectrum lamps. 73 FR 13620, 13648 (March 13, 2008). After analyzing catalog data and talking to industry experts, DOE found that lamps with a diameter greater than 2.5 inches are more common than lamps of smaller diameters. Lamps with voltage ratings less than 125V also are more common than lamps with higher voltage ratings. Therefore, for the NOPR, DOE proposes to analyze the product class characterized by standard spectrum, voltage less than 125V, and diameter greater than 2.5 inches. For further information on representative product classes, see chapter 5 of the TSD.

3. Baseline Lamps and Systems

Once DOE identified the representative product classes for analysis, DOE selected the representative units for analysis (*i.e.,* baseline lamps) from within each product class. These representative units are generally what DOE believes to be the most common, least efficacious lamps in their respective product classes. DOE chose multiple baseline lamps because DOE found that the market for each product class is segmented into multiple submarkets for lamps with slightly different consumer utilities. For example, the 40W T12, 34W T12, and 32W T8 lamps are the most common lamps in the commercial four-foot medium bipin product class. The 34W T12 is a reduced wattage lamp that is not as versatile as the 40W T12, however, and consumers switching from a T12 to a T8 lamp must purchase a new ballast. Thus, these lamps are not entirely substitutable, so DOE has chosen to analyze them as separate baselines. DOE's selection of baseline lamps is discussed in further detail below.

a. General Service Fluorescent Lamps

As described in the March 2008 ANOPR, DOE took a systems approach to its GSFL analysis. 73 FR 13620, 13649 (March 13, 2008). In this approach, DOE selected typical ballasts (which provide current to the lamps) to pair with each baseline lamp and higher-efficacy lamp. Though DOE did not consider the ballast as directly affecting lamp efficacy, the ballast selection does affect the overall system efficacy (system input power and total lumen output), thereby having a significant impact on LCC and NIA results. For this reason, DOE considered a variety of ballast types (*e.g.,* electronic and magnetic) and ballast factors in its analysis.

In the March 2008 ANOPR, DOE chose three baseline lamps for 4-foot medium bipins less than or equal to 4,500K (installed on T8 electronic and T12 magnetic ballasts), three baseline lamps for 8-foot single pin slimlines less than or equal to 4,500K (installed on T8 electronic and T12 magnetic ballasts), and two baseline lamps for 8-foot recessed double-contact HOs less than or equal to 4,500K (installed on T8 magnetic and T12 magnetic ballasts). 73 FR 13620, 13647 (March 13, 2008). DOE did not receive any comments on baseline lamps for the commercial and industrial sectors and thus has retained all baseline lamps from the March 2008 ANOPR. However, as discussed below, DOE did receive comments regarding additional sectors to analyze and the ballast selected to pair with the 8-foot RDC HO baseline lamps. In addition, DOE developed baseline lamp-and-ballast systems for the 4-foot T5 MiniBP SO and HO product classes.

Regarding GSFL operating in the residential sector, several stakeholders commented that residential T12 ballasts will continue to be sold past 2009 and that the residential applications of these ballasts represent a large portion of the remaining market for these lamps. (NEMA, No. 22 at pp. 20, 25; Public Meeting Transcript, No. 21 at pp. 276–277) PG&E stated that T12 lamps on magnetic ballasts continue to exist in the residential sector in California. (Public Meeting Transcript, No. 21 at p. 279) The Joint Comment also stated that residential applications need to be factored into the analysis, but because the same lamps can be used in all sectors, a separate analysis is not needed for the residential sector. (Joint Comment, No. 23 at p. 10)

In response, in this NOPR, DOE has analyzed GSFL in the residential sector. In interviews with manufacturers and by reviewing manufacturer product catalogs, DOE found that a significant portion of T12 4-foot medium bipin lamps operate in the residential sector. DOE is maintaining the same standards case lamps used in the commercial and industrial sectors for 4-foot medium bipins in the residential sector because, as the Joint Comment stated, the same lamps can be used in all sectors. However, DOE is choosing a separate baseline lamp for the residential 4-foot medium bipin analysis. Conversations with industry experts and a published study prepared for PG&E [22] have revealed that residential consumers are more likely to buy 40W T12 lamps because 32W T8 lamps and 34W T12 lamps are less common. Therefore, in the residential sector, DOE is only analyzing the 40W T12 lamp as a baseline lamp. In addition, reviewing available catalog information, DOE has found that the most common 40W T12 lamp sold in the residential sector is different from the 40W T12 baseline lamp presented in the March 2008 ANOPR for the commercial and industrial sectors. 73 FR 13620, 13647 (March 13, 2008). Therefore, in the NOPR, DOE has chosen a 40W T12 baseline lamp for the residential sector that has a slightly lower efficacy (76.8 lm/W) and shorter lifetime (15,000 hours) than the typical 40W T12 lamp sold in the commercial sector.

[22] ''Codes and Standards Enhancement (CASE) Initiative for PY2008: Title 20 Standards Development,'' *Analysis of Standards Options for Linear Fluorescent Fixtures* (Prepared for PG&E by ACEEE, Lighting Wizards, and Energy Solutions). (Last modified May 14, 2008) Available at: *http://www.energy.ca.gov/appliances/2008rulemaking/documents/2008-05-15_workshop/other/PGE_CASE_Study_-_Linear_Fluorescent_Fixtures.pdf.*

After reviewing manufacturer literature and the study prepared for PG&E on fixtures in the residential sector,[23] DOE found that the most common residential sector ballast is a low-power-factor 2-lamp magnetic T12 system with a ballast factor of 0.68. Therefore, for the NOPR, DOE paired the baseline lamp with this ballast for the residential sector analysis.

Because DOE has decided to cover and analyze 4-foot T5 miniature bipin standard output and 4-foot T5 miniature bipin high output lamps in this rulemaking (section 0 of this notice), DOE established baseline lamps for these two product classes. NEMA and the Joint Comment both stated that if DOE does not cover T5 lamps, then less efficient, halophosphor T5 lamps may enter the market place. (Public Meeting Transcript, No. 21 at pp. 71–72; Joint Comment, No. 23 at p. 3) Because these less efficient halophosphor T5 lamps are not on the market today, DOE developed model T5 halophosphor lamps in its engineering analysis. To create these model T5 lamps, DOE used efficacy data from short halophosphor fluorescent T5 lamps currently available and developed a relationship between length and efficacy. DOE validated this relationship by comparing it to previous industry research. DOE then used this relationship to determine the efficacies of a halophosphor 4-foot T5 miniature bipin standard output lamp and a halophosphor 4-foot halophosphor T5 miniature bipin HO lamps. Specifically, the baseline 4-foot miniature bipin standard output lamp is 28W with an efficacy of 86 lm/W and a lifetime of 20,000 hours. The baseline 4-foot miniature bipin high output lamp is 54W with an efficacy of 77 lm/W and a lifetime of 20,000 hours. DOE used these lamps as baseline lamps to establish the economic impacts of a standard that would eliminate such lamps. For more information about these and other baseline lamps, see chapter 5 and appendix 5B of the TSD.

In its review of manufacturer literature, DOE found that a range of ballast factors are available for the 4-foot T5 product classes, and the most common ballast is a 2-lamp electronic ballast. DOE attempts to compare lamp-and-ballast systems with similar light output so that consumers switching to more efficient systems will be able to preserve lumen output. In order for the halophosphor baseline T5 lamps to produce light output similar to the standards-case T5 lamps, they must be paired with the highest ballast factor ballasts available on the market today. Therefore, in the NOPR, DOE is pairing its baseline 4-foot T5 SO miniature bipin lamp with a 1.15 ballast factor ballast, and its baseline 4-foot T5 miniature bipin HO lamp with a 1.0 ballast factor ballast. For further detail on the baseline lamps and ballasts selected for the 4-foot T5 product classes, see chapter 5 of the TSD.

DOE proposed in the March 2008 ANOPR that the most common ballast in use for the 8-foot T12 recessed double-contact, high-output product class is an electronic rapid-start ballast. (March 2008 ANOPR TSD chapter 5). Several stakeholders commented at the public meeting that the majority of 8-foot T12 high-output ballasts installed today are magnetic. (Public Meeting Transcript, No. 21 at pp. 124–125; Public Meeting Transcript, No. 21 at p. 126) NEMA and the Joint Comment also commented that magnetic T12 high-output ballasts are allowed under current regulations and, therefore, will continue to be sold past 2009. (Joint Comment, No. 23 at p. 7; NEMA, No. 22 at p. 25) Because the majority of the installed base is magnetic, DOE is revising its baseline T12 high-output ballast to be magnetic for the life-cycle cost analysis. However, DOE recognizes that historical shipments from the 2000 rulemaking on GSFL ballasts (hereafter ''2000 Ballast Rule'') (62 FR 56740 (Sept. 19, 2000)) indicate that T12 electronic high-output ballasts are also increasingly being shipped.[24] Therefore, in the national impacts analysis, DOE modeled the installed base on magnetic ballasts, and forecasted shipments of T12 high-output lamps operating on both electronic and magnetic ballasts in the national impacts analysis. For further detail regarding the revised baseline lamps and systems for the 8-foot RDC HO product class, see chapter 5 of the TSD.

DOE reviewed the remaining baseline lamp-and-ballast systems discussed in the March 2008 ANOPR and believes they are still appropriate, as DOE received no comments concerning these systems. Therefore, DOE maintained the same number of lamps per system and ballasts discussed in the March 2008 ANOPR for the 4-foot medium bipin and 8-foot single pin slimline product classes analyzed in the commercial and industrial sectors. 73 FR 13620, 13647 (March 13, 2008).

b. Incandescent Reflector Lamps

In the March 2008 ANOPR, DOE proposed three baseline lamps for the IRL representative product class. 73 FR 13620, 13648 (March 13, 2008). These baseline lamps, all parabolic reflector (PAR) halogen baseline lamps, are regulated by EPCA and meet the EPCA standard. (42 U.S.C. 6295(i)(1)) NEMA commented that because BR lamps remain on the market due to a Federal exemption and because they are commonly used in consumer applications, the BR lamp should be the baseline lamp instead of the halogen PAR. (Public Meeting Transcript, No. 21 at p. 162; NEMA, No. 22 at pp. 10, 16, and 18) NEMA also contends that because DOE selected halogen PAR lamps as the baseline, DOE is losing the opportunity to show additional energy savings. (NEMA, No. 22 at p. 16)

In response, although BR lamps are a common incandescent reflector lamp on the market today, DOE believes they should not be selected as baseline lamps in the engineering analysis of this rulemaking for the reasons that follow. The baseline lamp should be typical of *covered* lamps within a certain product class. The most common BR lamp is the 65W BR lamp, which remains on the market due to Federal exemptions. Because the 65W BR lamp is not covered in this rulemaking, it cannot be a baseline lamp. In addition, consumers purchasing the 65W BR lamp would not be affected by the amended standards proposed in this NOPR. Therefore, DOE would not be able to demonstrate additional energy savings for those consumers purchasing the 65W BR lamp even if it were able to select that lamp as a baseline lamp.

Although certain BR lamps are covered in this rulemaking, DOE predicts that the most typical lamp sold on the market in 2012 will continue to be the halogen PAR lamp. EISA 2007 required that all non-exempted BR lamps meet EPCA standards by January 1, 2008. Because these lamps are similar in efficacy and price to the halogen PAR, the most common reflector lamps meeting the EPCA standard in 2007, DOE is continuing to choose halogen PAR lamps as the baseline lamp for the NOPR.

NEMA commented that current PAR baseline lamps have higher efficacy than the lamps sold in 1992 (when EPACT 1992 prescribed IRL standards), due to optical improvements. (NEMA, No. 22 at p. 16) However, because DOE prefers that the baseline lamp be typical of lamps sold on the market today, DOE is maintaining the same 90W PAR baseline lamp and 75W PAR baseline lamp used

[23] *Id.*

[24] U.S. Department of Energy—Energy Efficiency and Renewable Energy Office of Building Research and Standards, *Technical Support Document: Energy Efficiency Standards for Consumer Products: Fluorescent Lamp Ballast Proposed Rule* (Jan. 2000). Available at: *http://www1.eere.energy.gov/buildings/appliance_standards/residential/gs_fluorescent_0100_r.html.*

in the March 2008 ANOPR. 73 FR 13620, 13648 (March 13, 2008). DOE now believes that the 50W PAR30 baseline lamp with a lifetime of 3,000 hours and an efficacy of 11.6 lm/W presented in the March 2008 ANOPR is not typical of lamps sold on the market today. 73 FR 13620, 13648 (March 13, 2008). Therefore, for this notice, DOE is choosing a 50W PAR30 lamp with an efficacy of 14.2 lm/W and a lifetime of 3,000 hours. Based on an examination of manufacturer product catalogs, DOE believes that this lamp is a higher-volume product than the baseline lamp presented in the March 2008 ANOPR. The lamp choice is consistent with advice DOE received from GE to use lamps from major manufacturers in the IRL analysis for modified-spectrum lamps. (Public Meeting Transcript, No. 21 at p. 170) For further detail on IRL baseline lamps, see chapter 5 of the TSD.

4. Lamp and Lamp-and-Ballast Designs

As described in the March 2008 ANOPR, in the engineering analysis, DOE considered only ''design options''—technology options used to improve lamp efficacy that were not eliminated in the screening analysis. 73 FR 13620, 13644 (March 13, 2008). DOE's selection of design options guided its selection of lamp and lamp-and-ballast designs and efficacy levels. For example, for GSFL, DOE noted groupings around the types of phosphor used and the wall thickness of those phosphors. Regarding IRL, DOE identified natural ''technology-based'' divisions in the market around the type of incandescent technology (*i.e.*, halogen or HIR) used. DOE also identified certain technology options and created model lamps to represent the efficacy those technology options could achieve.

As described in the March 2008 ANOPR, DOE also accounted for lumen output when DOE established lamp designs for its analyses. 73 FR 13620, 13648 (March 13, 2008). For the LCC analysis, DOE considered those lamps (or lamp-and-ballast systems) that: (1) Emit lumens equal to the lumen output of the baseline lamp or lamp-and-ballast system, or below that lamp by no more than 10 percent; and (2) result in energy savings. DOE took this approach in order to accurately characterize the cost-effectiveness of a particular efficacy level if a consumer makes an informed decision that maintains light output. However, as DOE recognizes that all consumers may not make such decisions, lamp or lamp-and-ballast designs that under-illuminate, over-illuminate, or do not result in energy savings are considered in the NIA.

a. General Service Fluorescent Lamps

As described in the March 2008 ANOPR, DOE used a systems approach for the fluorescent lamp analysis, because DOE recognizes that both lamps and ballasts determine a system's energy use and the overall system lumen output. 73 FR 13620, 13649 (March 13, 2008). This approach allows DOE to select a variety of lamp-and-ballast designs that meet a given efficacy level. Generally, DOE chose its potential design options by selecting commercially-available fluorescent lamps at higher efficacies than the baseline lamps. These higher efficacies are achieved through the design options described in the screening analysis. After selecting these higher-efficacy lamps, DOE selected lamp-and-ballast combinations for the LCC that both save energy and maintain comparable lumen output. For instances when the consumer is replacing only the lamp, DOE selected a reduced-wattage, higher-efficacy lamp for use on the existing ballast. For instances when the consumer is replacing both the lamp and the ballast, DOE was able to obtain energy savings and maintain comparable lumen output using a variety of lamp-and-ballast combinations.

In the March 2008 ANOPR, DOE stated that it was not able to identify any application restrictions on using reduced-wattage fluorescent lamps, so therefore, DOE included reduced-wattage lamps as design options in the ANOPR. 73 FR 13620, 13650 (March 13, 2008). NEMA responded that most manufacturers identify several application issues for these lamps. For example, NEMA stated that reduced-wattage T8 lamps cannot be used with certain rapid-start circuits, at temperatures below 60 degrees Fahrenheit (°F) (or 70 °F for the 25W lamp), in drafty locations, in air-handling fixtures, on low-power-factor ballasts, on dimming ballasts, or on an inverter-operated emergency lighting system, unless the equipment is specifically listed for use with the reduced-wattage lamp in question. (NEMA, No. 22 at p. 10) NEMA also stated that reduced-wattage T12 lamps cannot be used at temperatures below 60 °F, in drafty locations, on low-power-factor ballasts, on reduced-light-output ballasts, on dimming ballasts, or on inverter-operated emergency lighting systems unless the equipment is specifically listed for use with the reduced-wattage lamp in question. (NEMA, No. 22 at p. 11)

In response, DOE recognizes that reduced-wattage lamps cannot be used in certain applications and that consumers should not be subject to any decrease in utility and performance due to an amended energy conservation standard. However, because consumers have the opportunity to purchase at least one full-wattage T12 or T8 lamp at each efficacy level, consumer utility will not be reduced by amending the existing energy conservation standard.

There are many applications where reduced-wattage lamps are appropriate. Therefore, DOE is modeling reduced-wattage lamps in the engineering analysis. In the NIA, DOE did not shift all consumers to reduced-wattage lamps in response to an energy conservation standard, because reduced-wattage lamps cannot be used in certain applications. Specifically, the majority of residential consumers have low-power-factor ballasts not designed to operate 34W T12 lamps. These assumptions are displayed in the NIA market-share matrices described in chapter 10 of the TSD.

b. Incandescent Reflector Lamps

In the March 2008 ANOPR, DOE selected lamp designs and candidate standard levels (CSLs) by observing natural efficacy divisions in the marketplace that correspond to the use of technologies (*e.g.*, halogen capsules, HIR technology, and improved reflector coatings) to increase lamp efficacy. 73 FR 13620, 13650 (March 13, 2008). CSL1, as set forth in the March 2008 ANOPR, could be met with a halogen lamp using a silverized reflector coating. CSL2 could be met with a 3,000-hour halogen infrared (IR) lamp. CSL3 could be met with an improved 4,000-hour halogen infrared lamp. CSL3 could also be achieved by using design options like a silverized reflector coating with a halogen infrared burner, or improved filament placement and higher efficiency inert fill gases in conjunction with a halogen infrared burner.

At the public meeting and through written comments, NEMA proposed several changes to the lamp designs and efficacy levels DOE identified for the IRL engineering analysis. NEMA suggested that DOE should analyze four efficacy levels, beginning with one slightly above EPCA and ending with the max-tech candidate standard level analyzed in the March 2008 ANOPR. (NEMA, No. 22 at p. 17) However, the efficacies of the baseline lamps chosen in the engineering analysis are above the lowest NEMA-proposed efficacy level. Therefore, because NEMA's lowest proposed efficacy level would not raise the efficacies of the most common

reflector lamps on the market today, DOE did not consider it in this NOPR.

NEMA commented that DOE should also consider in its NOPR an efficacy level that can be met with non-standard halogen or infrared halogen lamps. (NEMA, No. 22 at p. 18) This standard level would lie between the first efficacy level proposed by NEMA and the first candidate standard level (CSL1) proposed by DOE in the March 2008 ANOPR. 73 FR 13620, 13651 (March 13, 2008). To model the technologies that meet this efficacy level, DOE modeled an improved halogen lamp that uses xenon, a higher efficiency inert fill gas.

NEMA commented that DOE should not analyze CSL1 presented in the March 2008 ANOPR because that level is based on the silverized reflector coating, a patented technology.[25] (NEMA, No. 22 at pp. 16–17; Public Meeting Transcript, No. 21 at pp. 157–158) Other stakeholders commented that DOE should research when the patent on the silver technology expires, because the standard does not go into effect until 2012. (Joint Comment, No. 23 at p. 15) The Joint Comment stated that DOE should research viable alternatives that can be used to reach the first CSL if the silverized reflector coating is indeed patented. (Joint Comment, No. 23 at p. 15)

In response to these stakeholder comments, DOE researched the silverized reflector technology and found that the patent for that technology expires in December 2019.[26] Therefore, for the purpose of this rulemaking, DOE considers the silverized reflector coating a proprietary technology. As discussed during the Framework stage of this rulemaking, DOE only considers proprietary designs in its engineering analysis if there are other technology pathways to meet that efficacy level. DOE researched possible lamp designs for the March 2008 ANOPR's first CSL and found that a halogen lamp with a silverized reflector coating is the only improved halogen technology that can meet the March 2008 ANOPR CSL1. However, a slightly lower level can be achieved with an HIR lamp that has a 6,000-hour lifetime. Therefore, DOE is considering a slightly lower level that can be met by both long-life HIR lamp designs and silverized reflector coating lamp designs in the NOPR. In its analysis of this level, DOE considers both lamp designs as viable consumer options.

NEMA commented that DOE should lower CSL2, because longer life lamps would be in jeopardy of being eliminated from the marketplace. Because longer life products typically have lower efficacies, manufacturers may need to reduce lamp life to meet a particular efficacy level. (Public Meeting Transcript, No. 21 at pp. 177–178; NEMA, No. 22 at p. 16; Joint Comment, No. 23 at p. 15) Although increased lifetime reduces a lamp's efficacy, DOE believes that lifetime is a consumer economic issue rather than a utility issue. In addition, the IRL at each standard level can be manufactured with lifetimes equal to or greater than the lifetimes of the baseline lamp. Therefore, consumers who are purchasing the baseline lamp will continue to be able to purchase a lamp with a similar lifetime in the standards case. Finally, DOE has conducted an analysis to assess the impact of standards on longer lifetime lamps. Based on this analysis, documented in appendix 5D of the TSD, DOE is reasonably certain that even under the highest efficacy level analyzed in this NOPR, 6,000 hour lifetime lamps are technologically feasible. For all of these reasons, DOE maintained the lamp designs and efficacy level for CSL2 described in the March 2008 ANOPR.

Similar to its comments related to CSL1, NEMA commented that CSL3 is problematic because it is also based on the silverized reflector coating, a patented technology. (NEMA, No. 22 at p. 17; Public Meeting Transcript, No. 21 at pp. 157–158)

In its conversations with manufacturers and review of manufacturer catalogs, DOE found that CSL3 is achievable using technologies other than a silverized reflector coating. For example, other non-patented types of improved reflectors and higher-efficiency IR coatings can be used to reach this level. In fact, all major manufacturers produce two or more lamps that exceed this level, some of which are not dependent on the proprietary silverized reflector. Therefore, because there are alternate technology pathways to this level, DOE maintained the March 2008 ANOPR CSL3 as efficacy level 4 in the NOPR. This efficacy level is consistent with CSL4 proposed by NEMA in its comment. (NEMA, No. 22 at p. 17)

Finally, DOE conducted additional market research and discovered that IRL with efficacies significantly higher than the ANOPR CSL3 (or NOPR EL4) are being sold by one major manufacturer. These IRL are marketed as halogen infrared lamps with a silverized reflector, improved IR coating, and a lifetime of 4,200 hours. Therefore, in order to meet the requirement to analyze the highest technologically feasible level, for the NOPR, DOE has added a fifth efficacy level (EL5) based on these high-efficacy lamps. Although, to DOE's knowledge, there are no commercially-available IRL that do not use the patented silverized reflector and are equivalent in efficacy, DOE's research indicates that that are alternate, non-proprietary technology pathways to meet this efficacy level. In particular, DOE has extensively researched one particular advanced IR coating technology. Through interviews with manufacturers of this technology and through independent testing, DOE has preliminarily concluded that by using this advanced IR coating technology with a standard aluminum reflector, manufacturers can produce an IRL with an efficacy that exceeds EL5. For further detail on DOE's research on this technology, see appendix 5D of the TSD.

In summary, EL1 is based on an improved halogen lamp that uses xenon, a higher-efficiency inert fill gas. EL2 is based on a halogen infrared lamp with a lifetime of 6,000 hours; a halogen lamp using a silverized reflector coating could also meet this EL. EL3 is associated with a 3,000-hour halogen infrared lamp; this EL is more efficient than EL2 due to higher temperature operation of the filament. EL4 is based on a 4,000-hour improved halogen infrared lamp; improvements in the halogen infrared lamp could be made by using a double-ended halogen infrared burner, higher-efficiency inert fill gases, and efficient filament orientation. EL5 is based on a 4,200-hour halogen infrared lamps (even further improved); these further improvements include an improved reflector, IR coating, or filament design that produces higher-temperature operation (and may reduce lifetime to 3,000 hours).

5. Efficiency Levels

a. General Service Fluorescent Lamps

i. Revisions to ANOPR Efficiency Levels

For the March 2008 ANOPR, DOE developed CSLs for GSFL by dividing initial lumen output by the ANSI rated wattages of commercially-available lamps, resulting in rated lamp efficacies. In response to the potential GSFL efficacy levels presented in the March 2008 ANOPR, NEMA commented on several reasons why the association

[25] DOE notes that it would clearly be technologically feasible for manufacturers to adopt a product design that surpasses the levels specified in CSL1 (*e.g.*, using technologies that meet CSL2) and also avoids use of the proprietary technology in question. However, if DOE were to adopt CSL1, as presented in the March 2008 ANOPR, such manufacturers would be at a competitive disadvantage as compared to manufacturers who are able to access the patented technology.

[26] Zhao, Tianji *et al.*, ''Protected Coating for Energy Efficient Lamp,'' U.S. Patent 6,773,141 (August 10, 2004).

believes that the efficacy levels need to be revised. NEMA's comments regarding the efficacy levels considered in the March 2008 ANOPR can be divided into five categories: (1) The appropriateness of using ANSI rated wattages in the calculation of lumens per watt; (2) consideration of variability in production of GSFL; (3) manufacturing process limitations related to specialty products; (4) consideration of adjustments to photometry calibrations; and (5) the appropriateness of establishing efficacy levels to the nearest tenth of a lumen per watt. (NEMA, No. 22 at p. 13–14) In consideration of the above issues, NEMA suggested revised efficacy levels that could achieve the same results as the efficacy levels considered in the March 2008 ANOPR.

First, in support of lowering the March 2008 ANOPR efficacy levels, NEMA argued that ANSI rated wattages of GSFL are not necessarily representative of long-term reference watts. NEMA further stated that in many cases the actual lamp reference watts are greater than the ANSI designated value. (NEMA, No. 22 at p. 14) Second, NEMA commented on production variability and its impact on the resulting measured lamp efficacies. NEMA stated that DOE should not use nominal catalog initial lumen values when developing efficacy levels, as they do not reflect statistical lot-to-lot production variation. It also argued that as lamp lumens per watt is not a controlled process element in production or a product rating, larger tolerances may be required. NEMA further stated that lumens per watt is actually a calculation based on two primary process control elements: (1) Watts and (2) lumens. When practical production variation in lamp wattage (above ANSI-designated values) and lamp lumens (below catalog initial lumens) combine, the resulting variation in lumens per watt may be larger than expected. NEMA stated that DOE's proposed efficacy levels should be lowered to account for these tolerances. (NEMA, No. 22 at p. 14)

In consultation with the National Institute of Standards and Technology (NIST), DOE has investigated this issue thoroughly, and DOE agrees with NEMA on several points. By analyzing manufacturer compliance reports (submitted to DOE for existing GSFL energy conservation standards), DOE found that efficacies of lamps when reported for the purpose of compliance often vary from catalog-rated values. Specifically, DOE agrees that ANSI designated rated wattages may not be appropriate in calculating efficacy. In fact, the test procedures for GSFL incorporate a tolerance factor comparing measured lamp wattage to ANSI-rated wattage. DOE acknowledges that this tolerance factor could in fact significantly alter the measured efficacy of the lamps from the rated efficacy. In addition, DOE agrees that using rated lamp efficacy does not sufficiently account for lot-to-lot production variability. For this reason, to establish revised GSFL efficacy levels, DOE proposes to use lamp efficacy values submitted to DOE over the past 10 years for the purpose of compliance with existing energy conservation standards. Using compliance reports as a basis for efficacy standards should ensure that DOE is accurately characterizing the tested performance of GSFL, accounting for the measured wattage effects and wattage and lumen output variability as discussed above.

Further remarking on the effects of production variability, NEMA argued that it is inappropriate to use a small number of test samples to calculate a lumen-per-watt efficacy level. NEMA stated that its suggested levels incorporate a safety factor to take into account manufacturer process variations. (NEMA, No. 22 at p. 14) While DOE appreciates NEMA's input, it disagrees that the sample size is inappropriate. At NEMA's suggestion, a sample size of 21 lamps was originally established for reporting requirements in the 1997 test procedure rulemaking. 62 FR 29222, 29229 (May 29, 1997). The reported efficacy values are obtained by testing at least three lamps manufactured each month for at least 7 months out of a 12-month period. Upon receiving NEMA's comment, DOE consulted with NIST and has tentatively concluded that the minimum of 21 samples is sufficiently large sample size, assuming a normal distribution. In addition, by using the compliance report efficacies, DOE believes that it is accounting for statistical variations due to differences in production. The efficacy reported for compliance is related to the lower limit of the 95-percent confidence interval. This interval represents variation over the whole population of production, not only the sample size. 62 FR 29222, 29230 (May 29, 1997).

Third, NEMA commented that the proposed efficacy levels should be lowered to account for realistic production and manufacturing process limitations. NEMA argued that it may not be possible to apply the highest efficacy levels to some specialty products because they do not use high-speed production methods. (NEMA, No. 22 at p. 14) DOE is unaware of specialty products that meet the definition of GSFL and would be unable to meet the proposed standards. Therefore, DOE cannot appropriately quantify the reduction in efficacy level necessary if such situation in fact exists. DOE requests further comment and detail on this topic.

Fourth, NEMA claims that because the National Voluntary Laboratory Accreditation Program (NVLAP) has made adjustments to photometry calibrations since 1997, the lumens for some products have actually been reduced. These adjustments would thereby merit a reduction in DOE's GSFL efficacy levels. (NEMA, No. 22 at p. 14) In response, DOE consulted with NIST, which is unaware of any such adjustments in photometry calibrations since 1997. The lumen scale has not changed more than 0.2 percent as a result of changes to calibration systems. Furthermore, the formula used in the compliance reports contains a 2-percent de-rate factor to allow for testing variations. Therefore, DOE disagrees with NEMA's assertion that the efficacy levels should be further lowered to account for these adjustments.

Finally, NEMA maintained that if DOE uses lumens per watt as the efficacy level measurement, then the numbers should be rounded to the nearest whole number, rather than carried out to the tenths decimal place. In the March 2008 ANOPR, DOE considered efficacy levels that were specified to the nearest tenths lumen per watt. NEMA asserts that lamp testing and production variation does not allow for establishing minimum lumens per watt levels to the tenth place. (NEMA, No. 22 at p. 12) While DOE appreciates NEMA's comment, after consulting with NIST, DOE disagrees that lamp production variation would prohibit the regulation of GSFL to the nearest tenth decimal place of lumens per watt. If DOE were able to set minimum efficacy requirements to the nearest tenth of a decimal place, the higher-accuracy measurements and compliance could result in increased energy savings. However, in consideration of DOE's approach to establish efficacy levels and conduct subsequent analyses based on certification and compliance reports submitted by manufacturers, DOE now believes that maintaining the current rounding procedure (*i.e.*, to the nearest whole lumen per watt) is more appropriate. Because manufacturer compliance reports round numbers to the nearest lumen per watt, DOE believes that the data would not support establishment of an energy conservation standard for GSFL to the nearest tenth

of a lumen per watt. Therefore, in this NOPR, DOE is proposing to establish efficacy levels as whole lumen per watt numbers.

DOE presents revised GSFL efficacy levels in section VI.A.1 of this NOPR.

ii. Four-Foot T5 Miniature Bipin Efficiency Levels

Because DOE proposes to cover 4-foot T5 miniature bipin lamps and 4-foot T5 miniature bipin HO lamps, DOE developed efficacy levels for these two product classes. In its review of manufacturer literature, DOE identified the most common 4-foot T5 miniature bipin standard output lamps on the market (which based on product catalogs, DOE believes accounts for the majority of the 4-foot T5 SO market). The first efficacy level for this product class is based on these lamps, which use 800-series phosphors and have a rated catalog efficacy (initial lamp lumens divided by ANSI rated wattage) of 104 lm/W. In its research, DOE also noted higher efficacy 4-foot T5 miniature bipin standard output lamps that use improved 800-series phosphors. Specifically, there is a reduced-wattage (26W) 4-foot T5 miniature bipin lamp (with a rated efficacy of 112 lm/w) and a full-wattage (28W) lamp (with a rated efficacy of 110 lm/w). EL2, the second efficacy level for this product class, is based on these higher-efficacy lamps. Therefore, DOE analyzed two efficacy levels for this product class. The first efficacy level prevents the introduction of less-efficacious halophosphor lamps on the market, while the second efficacy level raises the efficacy of the current highest volume 4-foot T5 miniature bipin lamps on the market. In order to account for manufacturer variation, DOE used the average reductions in efficacy values due to manufacturer variation calculated for the highest efficacy 4-foot T8 medium bipin lamps, and applied those same reductions to the 4-foot miniature bipin rated efficacy values.

For the 4-foot T5 miniature bipin HO product class, DOE found that higher-efficacy full-wattage lamps do not exist on the market today. DOE did identify a higher-efficacy reduced-wattage lamp for this product class. However, because reduced-wattage lamps have a limited utility, DOE is choosing to base its efficacy levels on full-wattage lamps. In this way, consumers are not forced to purchase a lamp with limited utility under energy conservation standards. Therefore, for this product class, DOE is analyzing one efficacy level, which prevents the introduction of less-efficacious halophosphor lamps on the market. For more information on GSFL efficacy levels, see chapter 5 of the TSD.

b. Incandescent Reflector Lamps

As wattage increases for incandescent lamps, efficacy generally increases. Therefore, so that the efficacy levels reflected the performance of these lamps, DOE proposed in the ANOPR that the efficacy requirement for IRL vary according to the following equation: $a*P^{0.27}$, where ''a'' is a constant specifying the technology level and ''P'' is the wattage of the lamp. 73 FR 13620, 13645 (March 13, 2008). At the public meeting, NEMA commented that the smooth form of the candidate standard levels for IRL was appropriate. (Public Meeting Transcript, No. 21 at pp. 100–101, 156) Several other stakeholders also commented that they support the continuous function for IRL. These stakeholders noted that continuous functions more closely follow theoretical equations predicting the level of efficacy possible for any given desired level of light output and thus maximize energy savings. (Joint Comment, No. 23 at p. 15) DOE agrees with these comments and is proposing to maintain the continuous function for IRL in the same equation form proposed in the ANOPR.

As described in section V.C.4.b, DOE is proposing five efficacy levels in this NOPR. EL1 is based on an improved halogen lamp that uses xenon, a higher-efficiency inert fill gas. EL2 is based on a halogen infrared lamp with a lifetime of 6,000 hours. A halogen lamp using a silverized reflector coating also meets this EL. EL3 is based on the 3,000-hour HIR lamp. EL4 is based on a 4,000-hour improved HIR lamp. EL5 is based on a 4,200-hour improved HIR lamp.

6. Engineering Analysis Results

a. General Service Fluorescent Lamps

In chapter 5 of the March 2008 ANOPR TSD, DOE presented lifetime, rated wattage, and rated efficacy results for all lamp-and-ballast designs. NEMA commented that the lifetime rating for the reduced-wattage 30W T8 lamp should be 20,000 hours instead of 18,000 hours. (NEMA, No. 22 at p. 18) DOE reviewed catalog data and agrees that 20,000 hours is the appropriate lifetime for the 30W T8 lamp. DOE also reviewed catalog data for other reduced-wattage lamps. DOE found several 25W T8 lamps that were introduced on the market after it completed the ANOPR GSFL engineering analysis. Therefore, DOE updated the 25W T8 reduced-wattage lamp to have a slightly higher lumen output and longer lifetime to reflect the more common 25W T8 lamps sold on the market today.

Through interviews with lamp manufacturers, DOE found that several of the rated wattages DOE used in its ANOPR for the 4-foot medium bipin product class were not accurate. For the NOPR, DOE updated the rated wattage of the nominally 40W T12 from 40 to 41 watts. DOE also updated the rated wattage of the 30W T8, 28W T8, and 25W T8 lamp from 30 to 30.4 watts, 28 to 28.4 watts, and 25 to 26.6 watts, respectively. Due to these updates (and because the rated wattage affects the rated lamp efficacy), two 40W T12 lamps and the 25W T8 lamp have lower efficiencies than as they were analyzed in the March 2008 ANOPR. For further detail associated with these revisions, see chapter 5 of the TSD.

In addition to updating lamp efficacy, DOE revised the 8-foot T12 high output engineering analysis to reflect the purchase of a magnetic ballast in both the base case and standards case. As discussed in section V.C.4.a of this notice, DOE recognizes that a typical 8-foot T12 high output system uses a magnetic ballast. In addition, as the 2000 ballast rule does not require that these systems be electronic, consumers will be able to purchase a magnetic 8-foot T12 high output system in the future.

DOE also created a separate residential engineering analysis. In this engineering analysis, DOE assumes that the most typical installed fluorescent system in a residential household is a 40W T12 magnetic system. However, DOE recognizes that T8 systems are gaining in market share in the residential market. Therefore, DOE assumes that the majority of fluorescent systems installed for new construction and renovation in the residential sector are T8 systems. DOE discusses this assumption further in section V.D and V.E, as it primarily affects the LCC and NIA.

In the March 2008 ANOPR, DOE considered using two low ballast factor (BF) ballasts for 4-foot T8s, a 0.75 BF and a 0.78 BF. ACEEE stated that manufacturers are now selling ballasts for 4-foot T8 lamps with a ballast factor between 0.68–0.7 and that DOE should consider this ballast in the engineering analysis. (Public Meeting Transcript, No. 21 at p. 262) After reviewing catalog data for fluorescent lamp ballasts, DOE decided to add a ballast with a 0.71 BF in its engineering analysis as a system option that attains energy savings while maintaining light output. By including this low-BF ballast, DOE is able to more thoroughly characterize all consumer purchase options in the LCC and NIA.

b. Incandescent Reflector Lamps

In the March 2008 ANOPR, DOE also presented engineering analysis results

for IRL. NEMA generally agreed with the efficacy values in the table. (NEMA, No. 22 at p. 18) Thus, DOE is maintaining this approach with one exception. Specifically, DOE is revising the efficacy values it used for the 50W PAR30 baseline lamps and is creating several additional model lamps for the efficacy levels not analyzed in the March 2008 ANOPR. Because the revised baseline model exhibits a slightly different lumen package than the baseline model analyzed in the March 2008 ANOPR, DOE has created several additional model lamps in order to match the lumen package of the baseline lamp. For more information on the revised baseline model, see section V.C.3.b. For more information about lamp designs used in the IRL engineering analysis, see chapter 5 of the TSD.

7. Scaling to Product Classes Not Analyzed

As discussed above, DOE identified and selected certain product classes as ''representative'' product classes where DOE would concentrate its analytical effort. DOE chose these representative product classes primarily because of their high market volumes. The following section discusses how DOE scaled efficacy standards from those product classes it analyzed to those it did not.

a. General Service Fluorescent Lamps

In the engineering analysis for GSFL, DOE decided not to analyze the 2-foot U-shaped product class and the product classes with a CCT greater than 4,500K, due to the small market share of these classes. Instead, DOE is scaling the efficacy standards for the product classes analyzed to these product classes. The following sections discuss DOE's approaches to scaling to product classes not directly analyzed.

i. Correlated Color Temperature

Regarding the CCT product class division, DOE found in the March 2008 ANOPR that the reduction in efficacy between 4,100K and 6,500K lamps was between 4 percent and 7 percent. To avoid subjecting certain products to inappropriately high standards, DOE considered a single 7-percent reduction (from the efficacy levels for lamps with CCT less than or equal to 4,500K (low CCT)) for product classes greater than 4,500K (high CCT). 73 FR 13620, 13653 (March 13, 2008).

NEMA disagreed with DOE's use of a single 7-percent reduction for all GSFL lamps with a CCT greater than 4,500K. (NEMA, No. 22 at p. 18) NEMA submitted a written comment recommending an individualized reduction for each efficacy level and each product class for products with a CCT between 4,500K and 7,000K. NEMA's reductions ranged from 2.6 percent to 7.2 percent, depending on the efficacy level and product class. (NEMA, No. 26 at pp. 4, 6–7)

The Joint Comment also disagreed with the 7-percent reduction DOE employed. Looking at catalog data for the greater-than-4,500K product classes, the Joint Comment noted that the reduction in efficacy when moving from low-CCT to high-CCT lamps or from 4-foot MBP to 2-foot U-shaped lamps varies by efficacy level. For example, at CSL1 in the 4-foot medium bipin product class, the Joint Comment found that no reduction in the efficacy standard was necessary because high-CCT and 2-foot U-shaped T8 lamps are able to meet that level. At CSL3, the Joint Comment found a 5-percent reduction was appropriate; at CSL4 and CSL5, the Joint Comment found a 3-percent reduction was appropriate. Based on this data, the Joint Comment stated that the commenters would accept a 5-percent reduction for both the 2-foot U-shaped and greater-than-4,500K product classes. (Joint Comment, No. 23 at pp. 9–10)

Through an examination of the comments and a further inspection of manufacturer catalog data, DOE now recognizes that a single efficacy reduction of 7 percent for each efficacy level and each product class is not always appropriate when trying to establish efficacy levels for lamps with greater than 4,500K CCT. Therefore, for this NOPR, DOE proposes to establish a separate scaling factor for each EL and product class. DOE's intention in developing scaling factors for this NOPR was to establish high-CCT efficacy levels that mimic the same technological effects as the low-CCT efficacy levels. For example, if EL3 for the low-CCT 4-foot MBP product class eliminates all but the highest-efficacy, low-CCT T12 lamps, DOE established a high-CCT EL3 that attempted to eliminate all but the highest-efficacy, high-CCT, T12 lamps as well. Because the NEMA technical committee analyzed all efficacy levels for all product classes with a similar intention and because DOE found that this range is consistent with the range of reductions found in manufacturer literature, DOE proposes to adopt the percentage reduction for each EL suggested by NEMA. In order to establish efficacy levels for high CCT lamps, DOE then applied these percentage reductions to the efficacy levels (discussed in sectionV.C.5.a) for the representative product classes. For more information on the efficacy levels for product classes with a CCT greater than 4,500K, see chapter 5 of the TSD.

ii. U-Shaped Lamps

Regarding the 2-foot U-shaped product classes, in March 2008 ANOPR, DOE found that when comparing catalog efficacies of 2-foot U-shaped lamps to 4-foot MBP lamps, efficacy scaling factors varied depending on whether one was comparing T12 lamps or T8 lamps. Specifically, DOE had initially determined that a 3-percent reduction was appropriate for T8 lamps, and a 6-percent reduction was appropriate for T12 lamps. To avoid subjecting certain products to inappropriately high standards, DOE stated that it was considering to apply a single 6-percent reduction from the five 4-foot medium bipin efficacy levels to obtain five 2-foot U-shaped efficacy levels. 73 FR 13620, 13653 (March 13, 2008).

In response to the ANOPR, NEMA commented that only three ELs for the 2-foot U-shaped product class were appropriate. These ELs recommended by NEMA were based on the same technology options for the 4-foot medium bipin product class: (1) NEMA's EL1 would remove all halophosphor T12 lamps; (2) NEMA's EL2 would remove all 700-series T12 U-lamps; and (3) NEMA's EL3 would remove all T12 U-lamps. (NEMA, No. 22 at p. 15) Each EL recommended by NEMA represented an approximately 9-percent to 10-percent reduction from ELs in the 4-foot medium bipin product class. As discussed above, the Joint Comment recommended that DOE use a single 5-percent reduction when scaling from the 4-foot medium bipin product class to the 2-foot U-shaped product class. However, the Joint Comment also found that the reduction varied by CSL. (Joint Comment, No. 23 at pp. 9–10)

Similar to its analysis regarding scaling to high-CCT product classes, DOE recognizes that a single reduction in efficacy may not be appropriate for all efficacy levels for the U-shaped product classes. Therefore, similar to NEMA's suggestion, DOE is proposing a separate reduction for each efficacy level based on similar technology steps seen for the 4-foot medium bipin product class. However, after examining commercially-available product DOE believes that five, not three, efficacy levels are appropriate for the 2-foot U-shaped product class. DOE assessed manufacturer catalogs containing commercially-available U-shaped lamps to develop standard levels with a similar technology impact at each EL as 4-foot linear medium bipin lamps. DOE

supplemented this analysis with compliance report data for U-shaped lamps to verify that the established efficacy levels coincide with the technological goals and actual performance of products on the market. For specific scaling factors for the proposed 2-foot U-shaped efficacy levels and a more detailed discussion of DOE's methodology, see chapter 5 of the TSD.

b. Incandescent Reflector Lamps

i. Modified-Spectrum IRL

At the ANOPR public meeting, DOE stated that the average reduction in efficacy of modified-spectrum lamps (as compared to standard spectrum lamps) was between 2 percent and 25 percent, with an average reduction of 15 percent. DOE acknowledged the range of spectrum modification and its effects on utility, and aimed to establish a standard that would not eliminate modified-spectrum lamps. Therefore, in the March 2008 ANOPR, DOE considered a minimum efficacy requirement for each modified-spectrum lamp that would be dependent on the testing of a equivalent standard-spectrum lamp. More specifically, the efficacy requirement for the modified-spectrum lamp would be determined on a per-lamp basis by measuring the lumen output of both the modified-spectrum lamp and the equivalent standard-spectrum reference lamp; manufacturers would then multiply the ratio of lumen outputs (*i.e.,* the lumen output of the modified-spectrum lamp divided by the lumen output of the standard-spectrum reference lamp) by the efficacy requirement for the standard-spectrum reference lamp to obtain the efficacy requirement for that modified-spectrum lamp. 73 FR 13620,13653 (March 13, 2008).

GE commented that this approach may be reasonable as long as DOE gave this reduction to true modified-spectrum lamps, rather than lamps marketed as having modified spectrums, but which in fact do not meet the requirements of that term. (Public Meeting Transcript, No. 21 at p. 168) NEMA commented that DOE's proposal for establishing an efficacy standard for modified-spectrum IRL is complicated, difficult to enforce, and non-verifiable. (NEMA, No. 22 at p. 19) In addition, NEMA expressed concern that the responsibility of establishing the efficacy for the equivalent standard-spectrum lamp would fall on the manufacturer. (Public Meeting Transcript, No. 21 at pp. 100–101) Also, the Joint Comment disagreed with an approach that would allow modified-spectrum technologies a variable reduction in efficacy (depending on their degree of spectrum modification and the method with which it is reached). (Joint Comment, No. 23 at p. 16) In response to those comments, DOE recognizes the drawbacks to the approach considered in the ANOPR and instead in the NOPR is proposing a single efficacy requirement (irrespective of the degree or method of spectrum modification) for each modified-spectrum IRL product class.

GE and NEMA suggested that the 25-percent reduction for A-line modified-spectrum lamps enacted by EISA 2007 standards for general service incandescent lamps (GSIL) and modified-spectrum GSIL may be appropriate for modified-spectrum IRL. (Public Meeting Transcript, No. 21 at pp. 169–170; NEMA, No. 22 at p. 19) The Joint Comment expressed an opposing viewpoint, arguing that the 25-percent reduction specified in EISA 2007 was based on a political compromise, not technical research. The Joint Comment also mentions that Ecos Consulting, on behalf of PG&E, tested a variety of modified-spectrum general service incandescent lamps. Their researchers estimated a total light output reduction of 11 to 18 percent due to the modified spectrum. (Joint Comment, No. 23 at p. 16)

DOE agrees with the Joint Comment that the reduction in efficacy for general service incandescent lamps used in EISA 2007 may not be appropriate for IRL. Instead, DOE based its reduction for the modified-spectrum product classes on independent testing and research of commercially-available modified-spectrum and standard-spectrum IRL.

Several stakeholders commented that the range of lumen reduction (2 percent to 29 percent) found among commercially-available modified-spectrum IRL may be attributable to lamps that do not meet the statutory definition of ''modified spectrum,'' which would make the stated average too high. (NEMA, No. 22 at p. 19; Public Meeting Transcript, No. 21 at pp. 164–167) These stakeholders suggested that DOE should only use lamps that meet the definition of ''modified spectrum'' when determining an appropriate scaling factor. (Public Meeting Transcript, No. 21 at p. 167–168) GE suggested that lamps sold by major manufacturers will meet the statutory definition of ''modified spectrum'' because NEMA manufacturers offered input into the legislative process that created this definition. (Public Meeting Transcript, No. 21 at p. 171)

In addition, the Joint Comment noted that when determining the modified-spectrum scaling factor, DOE should base its analysis on HIR IRL sources rather than conventional incandescent or conventional halogen IRL. The Joint Comment further stated that the spectral distribution of the HIR sources have reduced output in the red region of the spectrum compared to conventional incandescent lamp. The comment argued because this red region is the portion of the spectrum modified-spectrum lamps are often trying to suppress, a lower and more accurate scaling factor could be calculated by considering only HIR lamps. (Joint Comment, No. 23 at p. 16)

DOE agrees with stakeholders regarding the need to determine appropriate scaling factors and tested several modified-spectrum lamps from major manufacturers to determine whether they qualify as modified spectrum under the statutory definition. DOE only used the IRL that qualify as modified spectrum under the statutory definition to determine an appropriate scaling factor. In addition, DOE acknowledges that the spectral power distributions of incandescent (non-halogen), halogen, and HIR IRL are different over the electromagnetic spectrum. However, DOE does not believe that the reduced light output in the red region of the spectrum of HIR sources significantly affects the resulting scaling factor. This high wavelength red region of the spectrum is not weighted heavily when calculating the lumens emitted by the lamp. Therefore, any spectral differences in the infrared regions between the halogen IRL compared to the halogen infrared IRL would produce only minor differences in the reduction in efficacy for modified-spectrum lamps. Therefore, DOE tested both HIR and conventional halogen lamps in determining an appropriate scaling factor for modified spectrum.

However, as non-halogen (or conventional incandescent) IRL have significantly different radiation spectra over wavelengths contributing to the calculation of lumens (in general their light outputs are shifted toward lower wavelengths), it is likely that the resulting scaling factor based on these lamps would be significantly different than for halogen sources. Because non-halogen IRL (representing the IRL lamp types exempted from standards) are not regulated in this rulemaking, DOE believes that it would be inappropriate to include such lamps in its scaling factor analysis. Therefore, DOE considered only halogen and HIR IRL for the computation of the modified-spectrum IRL scaling factor.

To determine the scaling factor, DOE tested seven pairs (each pair consisting of one standard-spectrum lamp and one lamp marketed as modified-spectrum or a similar designation) of halogen IRL and one pair of HIR IRL made by major manufacturers. Though many of the lamps did not qualify as modified-spectrum under the statutory definition, for those that did qualify, DOE determined that the difference in light output and efficacy due to the modified-spectrum coating was 19 percent for both the halogen and IR halogen lamps. Therefore, DOE proposes to use a 19 percent reduction as the scaling factor for modified-spectrum IRL. For further details on scaling to modified-spectrum lamps, see chapter 5 and appendix 5C of the TSD.

ii. Lamp Diameter

As discussed in section V.A.2.c, in this NOPR, DOE has established separate product classes for IRL with a diameter of 2.5 inches or less based on their decreased efficacy associated with the unique utility that they provide (*e.g.*, ability of reduced diameter lamps to be installed in smaller fixtures). NEMA commented that a percentage reduction should be applied to the PAR30/PAR38 CSL so as not to eliminate PAR20 lamps (with diameters of 2.5 inches) at the highest CSLs set forth in the ANOPR. (Public Meeting Transcript, No. 21 at pp. 158–159) NEMA explained that the PAR20 lamp optical system is inherently less efficient than the PAR30 and PAR38 optical systems. In addition, it is difficult to implement the most efficient double-ended HIR burner in the PAR20 lamps. Therefore, NEMA suggests a reduction in the lumen per watt standards by 12 percent. (NEMA, No. 22 at pp. 17–18) In the Joint Comment, stakeholders stated that they were not opposed to a reduction in the efficacy standard as long as data supports manufacturer claims. (Joint Comment, No. 23 at p. 15–16)

DOE understands that PAR20 lamps are inherently less efficient than PAR30 and PAR38 lamps. To determine an appropriate scaling factor, DOE examined the inherent efficacy differences between the PAR20 lamp and its PAR30 or PAR38 counterpart by comparing catalog efficacy data of each lamp type from several lamp manufacturers. In general, DOE's analysis is consistent with NEMA's suggestion. Therefore, DOE proposes applying a 12-percent reduction from the efficacy requirement of the PAR30/PAR38 product class to determine the efficacy requirement for the PAR20 product class. For further details regarding the scaling to smaller lamp diameters, see chapter 5 of the TSD.

iii. Voltage

DOE also conducted an analysis to determine how to scale from the less than 125 volt product class to the greater or equal to 125 volt product class. NEMA commented that lamps rated at 130V are almost always used by customers to achieve ''double life'' by operating them at 120V, which results in performance below EPACT 1992 efficacy levels. (NEMA, No. 22 at p. 16) In consideration of the different test procedures for IRL rated at 130V than those rated at 120V, and by using equations from the *IESNA Lighting Handbook*,[27] DOE derived an efficacy scaling factor which would result in equivalent performance of both classes of IRL when operating under the same voltage conditions (as NEMA suggests they most often are). DOE determined that a higher standard for lamps equal to or greater than 125V would result in similar technological requirements and operational efficacies for lamps rated at all voltages. Using published manufacturer literature and the *IESNA Lighting Handbook*, DOE determined that there should be a 15-percent increase in the efficacy standard for lamps rated at 125V or greater. See chapter 5 of the TSD for details of the results and methodology used in the scaling analysis and other aspects of the engineering analysis.

D. Life-Cycle Cost and Payback Period Analyses

This section describes the LCC and payback period analyses and the spreadsheet model DOE used for analyzing the economic impacts of possible standards on individual consumers. Details of the spreadsheet model, and of all the inputs to the LCC and PBP analyses, are contained in chapter 8 and appendix 8A of the TSD. DOE conducted the LCC and PBP analyses using a spreadsheet model developed in Microsoft Excel. When combined with Crystal Ball (a commercially-available software program), the LCC and PBP model generates a Monte Carlo simulation [28] to perform the analysis by incorporating uncertainty and variability considerations.

The LCC analysis estimates the impact of a standard on consumers by calculating the net cost of a lamp (or lamp-and-ballast system) under a base-case scenario (in which no new energy conservation standard is in effect) and under a standards-case scenario (in which the proposed energy conservation regulation is applied). As detailed in the March 2008 ANOPR, the life-cycle cost of a particular lamp design is composed of the total installed cost (which includes manufacturer selling price, sales taxes, distribution chain mark-ups, and any installation cost), operating expenses (energy, repair, and maintenance costs), product lifetime, and discount rate. 73 FR 13620, 13659 (March 13, 2008). As noted in the March 2008 ANOPR, DOE also incorporated a residual value calculation to account for any remaining lifetime of lamps (or ballasts) at the end of the analysis period. 73 FR 13620, 13659 (March 13, 2008). The residual value is an estimate of the product's value to the consumer at the end of the life-cycle cost analysis period. In addition, this residual value must recognize that a lamp system continues to function beyond the end of the analysis period. DOE calculates the residual value by linearly prorating the product's initial cost consistent with the methodology described in the *Life-Cycle Costing Manual for the Federal Energy Management Program*.[29]

The payback period is the change in purchase expense due to an increased energy conservation standard, divided by the change in annual operating cost that results from the standard. Stated more simply, the payback period is the time period it takes to recoup the increased purchase cost (including installation) of a more-efficient product through energy savings. DOE expresses this period in years.

The Joint Comment stated that given the inherent uncertainty in the LCC methodology, DOE should recognize that LCC results within a certain range can be considered essentially equivalent. The Joint Comment emphasized that recognizing this uncertainty is especially important if other aspects of the analysis (*e.g.*, energy savings) show large differences for standard levels with LCC results that, given uncertainty in the analysis, are essentially the same. (Joint Comment, No. 23 at p. 22) DOE agrees that there are inherent sources of uncertainty in

[27] Rea, M. S., ed., *The IESNA Lighting Handbook: Reference and Application, 9th Edition*. New York: Illuminating Engineering Society of North America. IESNA (2000).

[28] Monte Carlo simulations model uncertainty by utilizing probability distributions instead of single values for certain inputs and variables.

[29] Fuller, Sieglinde K. and Stephen R. Peterson, National Institute of Standards and Technology Handbook 135 (1996 Edition); Life-Cycle Costing Manual for the Federal Energy Management Program (Prepared for U. S. Department of Energy, Federal Energy Management Program, Office of the Assistant Secretary for Conservation and Renewable Energy) (Feb. 1996). Available at: *http://fire.nist.gov/fire/firedocs/build96/PDF/b96121.pdf.*

the results of the LCC analysis due to the need to forecast certain inputs (*e.g.*, future electricity prices). In addition, DOE recognizes that inputs such as sales tax, operating hours, and discount rates may introduce variability in LCC results. However, as explained below, DOE's analyses are structured so as to address such uncertainties. As stated earlier, to properly characterize the LCC results, DOE performed probability analyses via Monte Carlo simulations by utilizing Microsoft Excel in combination with Crystal Ball. The Monte Carlo approach allowed DOE to determine average LCC savings and payback periods, as well as the proportion of lamp installations achieving LCC savings or attaining certain payback values. To fully consider the range of LCC results that may occur due to a standard, DOE also performed several sensitivity analyses on inputs such as operating hours, electricity price forecasts, and product prices. Based on these analyses, DOE believes that it can characterize the LCC and PBP for these products with a reasonable degree of certainty. See the TSD appendix 8B for further details, where probable ranges of LCC results are presented.

Table V.2 summarizes the approach and data that DOE used to derive the inputs to the LCC and PBP calculations for the March 2008 ANOPR and the changes made for today's proposed rule. The following sections discuss these inputs and comments DOE received regarding its presentation of the LCC and PBP analyses in the March 2008 ANOPR, as well as DOE's responses thereto.

TABLE V.2—SUMMARY OF INPUTS AND KEY ASSUMPTIONS USED IN THE ANOPR AND NOPR LCC ANALYSES

Inputs	March 2008 ANOPR	Changes for the Proposed Rule
Consumer Product Price	Applied discounts to manufacturer catalog ("blue-book") pricing in order to represent low, medium, and high prices for all lamp categories. Discounts were also applied to develop a price for ballasts.	Used same methodology from March 2008 ANOPR to derive additional prices for new lamps and ballasts incorporated into the engineering analysis.
Sales Tax	Derived weighted-average tax values for each Census division and large State from data provided by the Sales Tax Clearinghouse.[1]	Updated the sales tax using the latest information from the Sales Tax Clearinghouse.[2]
Installation Cost	Derived costs using the RS Means Electrical Cost Data, 2007[3] to obtain average labor times for installation, as well as labor rates for electricians and helpers based on wage rates, benefits, and training costs.	IRL and GSFL: Updated lamp replacement and lamp and ballast replacement labor rates from 2006$ to 2007$. GSFL: Added 2.5 minutes of installation time to the new construction, major retrofit, and renovation events in the commercial and industrial sectors to capture the time needed to install luminaire disconnects.
Disposal Cost	Not included	GSFL: Included a recycling cost of 10 cents per linear foot in the commercial and industrial sectors. IRL: No change.
Annual Operating Hours	Determined operating hours by associating building-type-specific operating hours data with regional distributions of various building types using the 2002 U.S. Lighting Market Characterization[4] and the Energy Information Administration's (EIA) 2003 Commercial Building Energy Consumption Survey (CBECS),[5] 2001 Residential Energy Consumption Survey,[6] and 2002 Manufacturing Energy Consumption Survey.[7]	GSFL: Added residential GSFL to LCC analysis and used methodology developed in the March 2008 ANOPR to derive residential operating hours for GSFL based on data in the 2002 U.S. Lighting Market Characterization and the EIA's 2001 Residential Energy Consumption Survey. IRL: Removed industrial sector analysis due to the low prevalence of IRL in that sector.
Product Energy Consumption Rate.	Determined lamp input power (or lamp-and-ballast system input power for GSFL) based on published manufacturer literature. Used a linear fit of GSFL system power on several different ballasts with varying ballast factors in order to derive GSFL system power for all of the ballasts used in the analysis.	Updated 4-foot T8 lamp-and-ballast system input power based on additional published manufacturer literature. Developed new system input powers for 8-foot T12 HO systems, 4-foot T12 residential systems, and 4-foot T5 systems.
Electricity Prices	Price: Based on EIA's 2005 Form EIA–861 data Variability: Regional energy prices determined for 13 regions.	Price: Updated using EIA's 2006 Form EIA 861 data.[8] Variability: No change.
Electricity Price Trends	Forecasted with EIA's Annual Energy Outlook (*AEO) 2007*.[9]	Updated with EIA's *AEO2008*.[10]
Lifetime	Ballast lifetime based on average ballast life of 49,054 from 2000 Ballast Rule.[11] Lamp lifetime based on published manufacturer literature where available. DOE assumed a lamp operating time of 3 hours per start. Where manufacturer literature was not available, DOE derived lamp lifetimes as part of the engineering analysis.	Ballasts: No change in commercial and industrial sector. Developed separate ballast lifetime estimate for the residential sector. Residential GSFL: 4-foot medium bipin lamp lifetime is dependent on the fixture lifetime (*i.e.,* the fixture reaches end of life before the lamp reaches end of life.). Commercial and industrial GSFL: No change. IRL: No change.

TABLE V.2—SUMMARY OF INPUTS AND KEY ASSUMPTIONS USED IN THE ANOPR AND NOPR LCC ANALYSES—Continued

Inputs	March 2008 ANOPR	Changes for the Proposed Rule
Discount Rate	Residential: Approach based on the finance cost of raising funds to purchase lamps either through the financial cost of any debt incurred to purchase product or the opportunity cost of any equity used to purchase equipment, based on the Federal Reserve's Survey of Consumer Finances data[12] for 1989, 1992, 1995, 1998, 2001, and 2004. Commercial and industrial: Derived discount rates using the cost of capital of publicly-traded firms in the sectors that purchase lamps, based on data in the 2003 CBECS,[13] Damodaran Online,[14] Ibbotson's Associates,[15] the 2007 Value Line Investment survey,[16] Office of Management and Budget (OMB) Circular No. A–94,[17] 2008 State and local bond interest rates,[18] and the U.S. Bureau of Economic Analysis.[19]	DOE updated the commercial and industrial discount rates using the latest versions of the sources used in the March 2008 ANOPR.
Analysis Period	Based on the longest baseline lamp life in a product class divided by the annual operating hours of that lamp.	Commercial and industrial GSFL: No Change. Residential GSFL: Analysis period is based on the useful lifetime of the baseline lamp. IRL: No Change.
Lamp Purchasing Events	DOE assessed five events: Lamp failure, standards-induced retrofit, ballast failure (GSFL only), ballast retrofit (GSFL only), and new construction/renovation.	GSFL: DOE assumed that HO lamps used magnetic ballasts in the base case. DOE added lamp failure, ballast failure/fixture failure, and new construction events for 4-foot medium bipin systems in the residential sector, where DOE also assumed the usage of magnetic ballasts in the base case. IRL: No change.

[1] The four large States are New York, California, Texas, and Florida.

[2] Sales Tax Clearinghouse, Aggregate State Tax Rates (2008)(Last accessed May 30, 2008). Available at: *http://thestc.com/STrates.stm*. The May 30, 2008 material from this Web site is available in Docket # EE–2006–STD–0131. For more information, contact Brenda Edwards at (202) 586–2945.

[3] R. S. Means Company, Inc., 2007 RS Means Electrical Cost Data (2007).

[4] U.S. Department of Energy, Office of Energy Efficiency and Renewable Energy, Energy Conservation Program for Consumer Products: Final Report: U.S. Lighting Market Characterization, Volume I: National Lighting Inventory and Energy Consumption Estimate (2002). Available at: *http://www.eere.energy.gov/buildings/info/documents/pdfs/lmc_vol1_final.pdf*.

[5] U.S. Department of Energy, Energy Information Administration, Commercial Building Energy Consumption Survey: Micro-level data, file 2 Building Activities, Special Measures of Size, and Multi-building Facilities (2003). Available at: *http://www.eia.doe.gov/emeu/cbecs/public_use.html*.

[6] U.S. Department of Energy, Energy Information Administration, Residential Energy Consumption Survey: File 1: Housing Unit Characteristic (2006). Available at: *http://www.eia.doe.gov/emeu/recs/recs2001/publicuse2001.html.*

[7] U.S. Department of Energy, Energy Information Administration, Manufacturing Energy Consumption Survey, Table 1.4: Number of Establishments by First Use of Energy for All Purposes (Fuel and Nonfuel) (2002). Available at: *http://www.eia.doe.gov/emeu/mecs/mecs2002/data02/shelltables.html.*

[8] U.S. Department of Energy, Energy Information Administration, Form EIA–861 for 2006 (2006). Available at: *http://www.eia.doe.gov/cneaf/electricity/page/eia861.html.*

[9] U.S. Department of Energy, Energy Information Administration, *Annual Energy Outlook 2007 with Projections to 2030* (Feb. 2007). Available at: *http://www.eia.doe.gov/oiaf/aeo/index.html.*

[10] U.S. Department of Energy, Energy Information Administration, *Annual Energy Outlook 2008 with Projections to 2030* (June 2008). Available at: *http://www.eia.doe.gov/oiaf/aeo/excel/aeotab_3.xls*.

[11] U.S. Department of Energy, Energy Efficiency and Renewable Energy, Office of Building Research and Standards, Technical Support Document: Energy Efficiency Standards for Consumer Products: Fluorescent Lamps Ballast Final Rule (Sept. 2000). Available at: *http://www1.eere.energy.gov/buildings/appliance_standards/residential/gs_fluorescent_0100_r.html*.

[12] The Federal Reserve Board, Survey of Consumer Finances. Available at: *http://www.federalreserve.gov/PUBS/oss/oss2/scfindex.html*.

[13] U.S. Department of Energy, Energy Information Administration, Commercial Building Energy Consumption Survey (2003). Available at: *http://www.eia.doe.gov/emeu/cbecs/*.

[14] Damodaran Online, *The Data Page: Historical Returns on Stocks, Bonds, and Bills—United States* (2006). Available at: *http://pages.stern.nyu.edu/adamodar*. (Last accessed Sept. 12, 2007.) The September 12, 2007 material from this Web site is available in Docket # EE–2006–STD–0131. For more information, contact Brenda Edwards at (202) 586–2945.

[15] Ibbotson's Associates, Stocks, Bonds, Bills, and Inflation, Valuation Edition, 2001 Yearbook (2001).

[16] Value Line, Value Line Investment Survey (2007). Available at: *http://www.valueline.com.*

[17] U.S. Office of Management and Budget, Circular No. A–94 Appendix C (2008). Available at: *http://www.whitehouse.gov/omb/circulars/a094/a94_appx-c.html*.

[18] Federal Reserve Board, Statistics: Releases and Historical Data—Selected Interest Rates—State and Local Bonds (2008). Available at: *http://www.federalreserve.gov/releases/h15/data/Monthly/H15_SL_Y20.txt*.

[19] U.S. Department of Commerce, Bureau of Economic Analysis, Table 1.1.9 Implicit Price Deflators for Gross Domestic Product (2008). Available at: *http://www.bea.gov/national/nipaweb/SelectTable.asp?Selected=N.*

1. Consumer Product Price

As in the March 2008 ANOPR, DOE used a variety of sources to develop consumer equipment prices, including lamp and ballast prices in manufacturers' suggested retail price lists (''blue books''), State procurement contracts, large electrical supply distributors, hardware and home improvement stores, Internet retailers, and other similar sources. DOE then developed low, medium, and high prices based on its findings.

For the NOPR, DOE added several new lamps and ballasts to its analyses. Accordingly, DOE developed prices for 4-foot medium bipin GSFL systems in

the residential sector, the 8-foot HO magnetic ballast, and commercially-available 4-foot T5 miniature bipin standard output and high-output lamps and ballasts using the same methodology applied in the March 2008 ANOPR. However, not all lamps assessed for this rulemaking are commercially available. In particular, DOE developed model halophosphor T5 standard-output and high-output lamps as baselines for these product classes. To establish prices for these baseline lamps, DOE calculated the price differential between a halophosphor 4-foot MBP lamp and the highest-efficacy 32W 4-foot MBP lamp. DOE then used this relationship to scale prices from the commercially-available T5 standard-output and high-output lamps to establish the halophosphor lamp prices.

DOE also developed a model IRL for EL1 based on the incorporation of xenon gas into the lamps. To determine the price of these lamps, DOE interviewed manufacturers and conducted its own research on the cost of xenon [30] to develop a manufacturer cost increase over the baseline lamp in a product class, and then applied a markup to represent consumer prices. See the engineering analysis in section V.C.4.b for further information on the model IRL lamp.

DOE also developed a price for the 6,000-hour HIR IRL for the NOPR. After reviewing data in manufacturer catalogs and interviewing manufacturers, DOE determined that the manufacturing costs for the 6,000-hour HIR lamp are the same as the manufacturing costs for the 3,000-hour HIR lamps that meet EL3. Therefore, for the NOPR, the commoditized retail prices for the long-life HIR lamps are the same as for the IRL that meet EL3.

Lastly, because DOE did not have manufacturer suggested retail price list data for the EL5 (HIR Plus) IRL, DOE used prices offered by Internet retailers to establish prices for these lamps. Specifically, DOE calculated individual retailers' discounts on blue book prices for EL4 (Improved HIR) lamps. DOE applied these same discounts to establish average blue book prices for EL5 lamps across all Internet retailers found to sell both EL4 and EL5 lamps. Using these approximate blue-book prices, DOE then followed the same methodology applied in the March 2008 ANOPR to establish low, medium and high lamp prices.

[30] DOE used the information in the following article to obtain the price of xenon: Betzendahl, Richard, ''The Rare Gets More Rare: The Rare Gases Market Update,'' CryoGas International (June 2008) 26.

2. Sales Tax

As in the March 2008 ANOPR, DOE obtained State and local sales tax data from the Sales Tax Clearinghouse. (March 2008 ANOPR TSD chapter 7) The data represented weighted averages that include county and city rates. DOE used the data to compute population-weighted average tax values for each Census division and four large States (New York, California, Texas, and Florida). For the NOPR, DOE retained this methodology and used updated sales tax data from the Sales Tax Clearinghouse [31] and updated population estimates from the U.S. Census Bureau.[32]

3. Installation Costs

As detailed in the ANOPR, DOE considered the total installed cost of a lamp or lamp-and-ballast system to be the consumer product price (including sales taxes) plus the installation cost. 73 FR 13620, 13660 (March 13, 2008). For the commercial and industrial sectors, DOE assumed an installation cost that was the product of the average labor rate and the time needed to install a lamp or lamp and ballast. In the residential sector, DOE assumed that consumers must pay for the installation of a lamp and ballast system. Therefore, the installation cost assumed was the product of the average labor rate and the time needed to install the lamp and ballast system. However, DOE assumed that consumers would install their own replacement lamps and, thus, would incur no installation cost when replacing their own lamp.

DOE received multiple comments on the average labor rates DOE used in the March 2008 ANOPR: $65.35 per hour for an electrician and $42.40 per hour for an electrician's helper. (March 2008 ANOPR TSD chapter 8). DOE assumed that the lamp-and-ballast hourly labor rate is 50 percent of an electrician's rate and 50 percent of the helper's rate, for a total labor rate of $53.88 based on ''RS Means Electrical Cost Data, 2007'' (RS Means).[33] NEMA commented that $53.88 per hour is approximately 10 percent lower than the current labor rate including benefits, while the Joint Comment stated that $54 per hour for ballast change-outs is reasonable only for residential and small commercial customers, and is too high for large commercial customers, who will have a full-time electrician or non-electrician maintenance person on staff for installations. (NEMA, No. 22 at p. 22; Joint Comment, No. 23 at p. 10) ACEEE also commented that large companies may have electricians on staff and encouraged DOE to research labor rates for these workers. (Public Meeting Transcript, No. 21 at pp. 216–217)

DOE understands that there may be a range of labor rates in the market for installations and also clarifies that the March 2008 ANOPR labor rate of $53.88 per hour is for the installation of lamps and ballasts, not only ballasts, as stated in the Joint Comment. ACEEE and the Joint Comment requested that DOE lower the labor rate, while NEMA commented that DOE should raise the labor rate; none of the comments provided DOE with supporting references. DOE uses ''RS Means Electrical Cost Data, 2007,'' because labor costs in RS Means are based on labor union agreements and construction wages, as well as actual working conditions in 30 major U.S. cities. Productivity data in RS Means represents an extended period of observations. For this reason, DOE chose to retain for the NOPR the RS Means methodology used for the March 2008 ANOPR. Based on inflation estimates derived from consumer price index data from the U.S. Bureau of Labor Statistics, DOE estimated that this rate in 2007 dollars is $55.41 per hour. DOE also updated the lamp replacement labor rate to be $15.94 per hour in 2007 dollars.

In the March 2008 ANOPR, DOE used several installation times for lamps and ballasts in the commercial and industrial sector analyses, such as the lower bound installation time of 30 minutes for 2-lamp 4-foot medium bipin fixtures, and the upper bound installation time of 60 minutes for 2-lamp 8-foot recessed double contact high-output fixtures. (March 2008 ANOPR TSD chapter 8) These times were obtained from the 2000 Ballast Rule TSD.[34]

DOE received several comments addressing these installation times. GE commented that the 2005 National Electric Code requirements for disconnecting luminaires before they are serviced for lamp or ballast

[31] Sales Tax Clearinghouse, ''Aggregate State Tax Rates'' (2007) (Last accessed May 30, 2008). Available at: *http://thestc.com/STrates.stm*. The May 30, 2008, material from this Web site is available in Docket #EE–2006–STD–0131. For more information, contact Brenda Edwards at (202) 586–2945.

[32] U.S. Census Bureau, ''Population Change: April 1, 2000 to July 1, 2007'' (July 2007). Available at: *http://www.census.gov/popest/states/files/NST-EST2007-popchg2000-2007.csv*.

[33] R. S. Means Company, Inc., *2007 RS Means Electrical Cost Data* (2007).

[34] U.S. Department of Energy, ''Appendix A: Engineering Analysis Support Documentation, 2000 Ballast Rule'' (2000) (Last accessed June 20, 2008). Available at: *http://www.eere.energy.gov/buildings/appliance_standards/residential/pdfs/appendix_a.pdf*.

replacements and installing luminaire disconnects for new construction or major retrofits will necessitate additional labor time. (Public Meeting Transcript, No. 21 at pp. 218–219; NEMA, No. 22 at p. 22) NEMA recommended that DOE use an installation time of approximately 2 to 3 minutes for luminaire disconnects. Industrial Ecology commented on average installation times during the recent relamping of a school in Atlantic City, NJ, in which an electrician changed ballasts and lamps for 4-lamp and 2-lamp fixtures at the rate of approximately 3 fixtures per hour. (Public Meeting Transcript, No. 21 at p. 220)

DOE agrees that extra time will be needed when a luminaire disconnect must be installed. Because DOE has not received detailed data on other installation times apart from the ones used in the 2000 Ballast Rule, DOE revised the ANOPR installation times specifically to address the time added by the installation of luminaire disconnects. For the NOPR analysis, DOE added 2.5 minutes to the ANOPR installation times for new construction, major retrofits, and renovation, events in which DOE assumed that a luminaire disconnect must be installed. Additional details on installation costs are available in chapter 8 of the NOPR TSD.

4. Disposal Costs

DOE did not consider disposal costs in the March 2008 ANOPR. Industrial Ecology commented that recycling costs should be considered in the LCC analysis for GSFL and that such costs range from 5 cents to 10 cents per foot. (Public Meeting Transcript, No. 21 at p. 212) In response, DOE researched recycling costs for GSFL and found an average cost of 10 cents per linear foot.[35] DOE also explored the prevalence of recycling in the commercial, industrial, and residential sectors. A report released by the Association of Lighting and Mercury Recyclers in 2004 noted that approximately 30 percent of lamps used by businesses and 2 percent of lamps in the residential sector are recycled nationwide.[36] DOE considers the 30 percent commercial and industrial recycling rate to be significant and, thus, incorporates recycling costs into its main analysis. DOE applied a cost of 10 cents per linear foot in the commercial and industrial sectors every time a lamp is replaced during the LCC analysis period. Due to discounting, the inclusion of recycling costs affects the LCC savings of lamps with different lifetimes than the baseline lamps that they are compared to. The recycling cost also affects the residual value of lamps that operate beyond the end of the analysis period. In the Monte Carlo analysis, DOE assumes that commercial and industrial consumers pay recycling costs in approximately 30 percent of lamp failures. DOE does not expect the 2 percent residential recycling rate to affect the residential sector LCC substantially, however, and thus did not apply the recycling costs to this sector.

5. Annual Operating Hours

DOE developed annual operating hours for IRL and GSFL in the March 2008 ANOPR by combining building type-specific operating hours data in the 2002 U.S. Lighting Market Characterization (LMC)[37] with data in the 2003 Commercial Building Energy Consumption Survey (CBECS),[38] the 2001 Residential Energy Consumption Survey (RECS),[39] and the 2002 Manufacturing Energy Consumption Survey (MECS),[40] which describe the probability that a particular building type exists in a particular region. (March 2008 ANOPR TSD chapter 6) DOE received comments on three areas related to the operating hours used for the LCC analysis: (1) Sectors analyzed; (2) regional variations; and (3) building types. These comments are discussed below. For further details regarding the annual operating hours used in the analyses, see chapter 6 of the TSD.

a. Sectors Analyzed

In the March 2008 ANOPR, DOE analyzed GSFL in the commercial and industrial sectors; DOE did not analyze the usage of GSFL in the residential sector because it believed it was a relatively small portion of GSFL sales. The Joint Comment requested that DOE perform an LCC analysis of GSFL in the residential sector, because lamps in the residential sector are replaced infrequently due to lower operating hours compared to the commercial and industrial sectors. (Joint Comment, No. 23 at p. 10) Similarly, NEMA commented that DOE should assess GSFL in the residential sector, because certain ELs may eliminate T12 lamp types, requiring many residential consumers to install new lamp fixtures. (NEMA, No. 22 at p. 32)

In response, DOE assessed the installed stock of lamps using the LMC, which stated that approximately 25 percent of linear fluorescent lamps exist in the residential sector. DOE considers this proportion to be significant and, thus, supports the recommendation to perform a residential LCC analysis of GSFL. DOE developed residential operating hours for GSFL by using data in the 2002 LMC and the 2001 RECS. However, DOE only performed an LCC analysis of 4-foot medium bipin lamps in the residential sector, because marketing literature indicates that 8-foot single pin slimline lamps and 8-foot recessed double contact HO lamps are not prevalent in residential settings.

In the March 2008 ANOPR, DOE analyzed IRL in the commercial, residential, and industrial sectors. (March 2008 ANOPR TSD chapter 6) NEMA commented that IRL should be removed from the industrial sector LCC analysis because they are rarely used in industrial settings. The Joint Comment emphasized the importance of analyzing IRL in the residential sector due to lower operating hours and higher electricity prices for residences compared to prices in the commercial sector. (NEMA, No. 22 at p. 20; Joint Comment, No. 23 at p. 17)

The LMC indicates that less than 1 percent of IRL were found in the industrial sector. Based on this data, DOE agrees with both comments and has removed IRL from the industrial sector in terms of its analyses. Consistent with the March 2008 ANORP LCC analysis, DOE also continued to perform a residential sector LCC analysis of IRL for the NOPR.

b. Regional Variation

At the public meeting for the March 2008 ANOPR, the Alliance to Save

[35] Environmental Health and Safety Online's fluorescent lights and lighting disposal and recycling Web page—Recycling Costs. Available at: *http://www.ehso.com/fluoresc.php* (Last accessed Dec. 8, 2008).

[36] Association of Lighting and Mercury Recyclers, ''National Mercury-Lamp Recycling Rate and Availability of Lamp Recycling Services in the U.S.'' (Nov. 2004).

[37] U.S. Department of Energy, Office of Energy Efficiency and Renewable Energy, ''U.S. Lighting Market Characterization. Volume I: National Lighting Inventory and Energy Consumption Estimate (2002).'' Available at: *http://www.netl.doe.gov/ssl/PDFs/lmc_vol1_final.pdf.*

[38] U.S. Department of Energy, Energy Information Agency, ''Commercial Building Energy Consumption Survey: Micro-Level Data, File 2 Building Activities, Special Measures of Size, and Multi-building Facilities (2003).'' Available at: *http://www.eia.doe.gov/emeu/cbecs/public_use.html.*

[39] U.S. Department of Energy, Energy Information Agency, ''Residential Energy Consumption Survey: File 1: Housing Unit Characteristic (2006).'' Available at: *http://www.eia.doe.gov/emeu/recs/recs2001/publicuse2001.html.*

[40] U.S. Department of Energy, Energy Information Agency, ''Manufacturing Energy Consumption Survey, Table 1.4: Number of Establishments by First Use of Energy for All Purposes (Fuel and Nonfuel) (2002).'' Available at: *http://www.eia.doe.gov/emeu/mecs/mecs2002/data02/shelltables.html.*

Energy commented that the LMC, which DOE used during the LCC analysis, may underestimate energy usage in the residential sector because operating hours may vary regionally (*e.g.*, by latitude), even for the same building types. (Public Meeting Transcript, No. 21 at pp. 197–198) In contrast, the Northwest Power and Conservation Council responded that there was a variation of a tenth of an hour per day in operating hours between a study completed in Tacoma, Washington, and a study of California. Therefore, the Council suggested that differences in latitude and weather do not significantly affect operating hours. (Public Meeting Transcript, No. 21 at p. 199)

DOE found no conclusive evidence that would suggest that geographic location has a significant impact on operating hours for a given building type. However, DOE found evidence of regional differences in the proportions of different building types (*e.g.*, number of mobile homes versus number of multi-family dwellings) as the probable source of regional variation in operating hours.[41] As detailed in the March 2008 ANOPR, DOE captured this regional variation by using the RECS, CBECS, and MECS to determine the probability that a particular building type exists in a particular region. 73 FR 13620, 13654 (March 13, 2008). For this reason, DOE has not revised its analysis for the NOPR to specifically address latitude, weather, or other regional factors apart from building type proportions.

c. Building Type

NEMA requested a confirmation that DOE has included retail facilities in its consideration of operating hours, because retail facilities have more operating hours compared to other commercial facilities. (NEMA, No. 22 at p. 20) DOE is aware that different commercial building types have different average operating hours and, thus, considered a variety of commercial building types, including retail facilities, in its analysis. Operating hours were determined using the LMC study. DOE assessed the operating hours for retail facilities for the March 2008 ANOPR (ANOPR chapter 6 of the TSD) and retained the assessment of commercial retail facility operating hours for the NOPR analysis.

[41] E. Vine, D. Fielding, ''An Evaluation of Residential CFL Hours-of-Use Methodologies and Estimates: Recommendations for Evaluators and Program Managers,'' *Energy and Buildings* 38 (2006), 1388–1394.

6. Product Energy Consumption Rate

As in the March 2008 ANOPR, DOE determined lamp input power (or lamp-and-ballast system input power for GSFL) based on published manufacturer literature. (March 2008 ANOPR TSD chapter 5) For GSFL, DOE assessed a variety of lamp-and-ballast combinations by establishing a correlation between ballast factor and system input power. This allowed DOE to derive GSFL system power (in watts) for all of the lamp and ballast combinations used in the analysis. The rated system power was then multiplied by the annual operating hours of the system to determine the annual energy consumption. DOE retained this methodology for this notice.

For this NOPR, DOE updated system input power ratings for certain lamp-and-ballast combinations, and developed new system-input powers for other lamp-and-ballast combinations not considered in the March 2008 ANOPR. Specifically, DOE obtained additional system power ratings for 4-foot T8 ballasts from recently released manufacturer literature and updated these system input power ratings for the NOPR. DOE also developed new system input power ratings for magnetic residential 4-foot T12 systems, magnetic 8-foot HO systems, 4-foot T5 miniature bipin systems, and 4-foot T5 miniature bipin HO systems.

7. Electricity Prices

DOE determined energy prices by deriving regional average prices for 13 geographic areas consisting of the nine U.S. Census divisions, with four large states (New York, Florida, Texas, and California) treated separately. The derivation of prices was based on data in EIA's Form EIA–861. DOE received three comments on the regional electricity prices that it used for the ANOPR LCC. PG&E commented that the California residential electricity price of 9.9 cents per kWh (ANOPR TSD chapter 8) was lower than what appears to be an average of 14 cents per kWh in the State. ACEEE and the Joint Comment recommended that DOE use EIA's publication ''Electric Power Monthly''—as a source of recent electricity prices instead of Form EIA–861. (Public Meeting Transcript, No. 21 at pp. 223–224; Joint Comment, No. 23 at p. 18)

In response, DOE notes that it uses Form EIA–861 for two reasons. First, it allows for the creation of regional average electricity prices weighted by the number of customers each electric utility serves. DOE prefers to use customer-weighted average electricity prices so that prices are not skewed by utilities serving small numbers of very large electricity consumers. Electricity sales are not well correlated with the number of consumers in the commercial sector, and the usage of customer-weighted averages more heavily weights the utilities that serve larger numbers of consumers. Second, ''Electric Power Monthly'' does not report customer-weighted prices. DOE appreciates the comments related to electricity prices, and for the NOPR analysis, DOE updated its electricity prices by using the latest version of Form EIA–861 (2006).[42] DOE notes that the latest Form's updated residential electricity price for California is 14.7 cents per kWh which is consistent with PG&E's assessment that the average residential electricity price in California is around 14 cents per kWh.

8. Electricity Price Trends

To project electricity prices to the end of the LCC analysis period in the March 2008 ANOPR, DOE used the reference, low-economic-growth, and high-economic-growth projections in EIA's *AEO2007*.[43] 73 FR 13620, 13660 (March 13, 2008). DOE received several comments on the resulting electricity price trends that it used in the LCC calculation. PG&E commented that DOE's forecasted electricity prices do not increase in real terms in the next 20 years, which the commenter argued is unrealistic. ACEEE and the Joint Comment both stated that DOE should use the most recent *AEO* forecasts along with a collection of other electricity price forecasts. (Public Meeting Transcript, No. 21 at pp. 224–225; Joint Comment, No. 23 at p. 18)

DOE supports the suggestion that it should use the most recent electricity price forecasts. DOE uses EIA's *AEO* because it is publicly available and has been widely reviewed. The latest *AEO* contains a table of comparisons to three other electricity forecasts; the only forecast that included prices (from Global Insight, Inc.) showed electricity prices very similar to the prices in the *AEO2008* reference case. Also, a conversion of the *AEO2008* forecast into real dollars reveals that *AEO*'s forecasted electricity prices do increase in real terms. For these reasons, DOE chose to continue using the *AEO* and

[42] Energy Information Administration, *Form EIA–861 Final Data File for 2006* (2006) (Last accessed June 20, 2008). Available at: *http://www.eia.doe.gov/cneaf/electricity/page/eia861.html.*

[43] U.S. Department of Energy, Energy Information Administration, *Annual Energy Outlook 2007 with Projections to 2030* (Feb. 2007). Available at: *http://www.eia.doe.gov/oiaf/archive/aeo07/index.html.*

the reference case in *AEO2008*.[44] DOE also presents LCC and PBP results for the low-economic-growth and high-economic-growth scenarios from *AEO2008* in appendix 8B of the TSD.

9. Lifetime

a. Ballast Lifetime

In chapter 8 of the March 2008 ANOPR TSD, DOE stated that it used 49,054 hours as the estimated ballast lifetime based on findings in the 2000 Ballast Rule. The Joint Comment suggested three reasons why ballast lifetimes are actually longer than the lifetime used in the 2000 Ballast Rule. The Joint Comment stated that, on average, ballasts operate below their life rating temperature. In addition, manufacturer estimates exceed the DOE lifetime even at rated conditions. The commenter also argued that market data of historical shipments of ballasts sold to new construction versus retrofit and replacement suggest that the average ballast life is longer than suggested. The Joint Comment contends that, in addition to considering the above points generally, DOE should specifically study these shipments to establish ballast lifetime. (Joint Comment, No. 23 at pp. 7–9)

Based on the Joint Comment's suggestions, DOE investigated several different ways of measuring a ballast's useful lifetime in commercial and residential buildings. DOE does not believe that using the rated temperature of ballasts is an appropriate way to measure a ballast's lifetime. For example, a building renovation or a lighting retrofit may cause buildings or homeowners to replace a ballast before it fails. DOE also believes that examining historical sales data of ballasts sold to new construction versus replacement and retrofit to estimate ballast lifetime would involve too many assumptions to provide a useful measure of lifetime. For example, DOE would need to estimate an appropriate distribution of ballast lifetimes in the field because ballasts are replaced at various points in their useful life due to different operating hours, failure rates, and time periods between initial building construction and the first lighting retrofit.

In its investigation of ballast lifetime, DOE encountered several studies that establish the ''measure life'' (*i.e.,* the true service life of a ballast in the field) of ballasts in both the commercial and residential sectors. One study comparing the results of several ''measure life'' reports found that the average ballast lifetime after a retrofit in the commercial sector is 13 years, and the average ballast lifetime after new construction is 15 years.[45] Using DOE's estimate of 49,054 hours and average operating hours for GSFL in the commercial sector, the lifetime of an average ballast is approximately 14.2 years. Because this lifetime is consistent with several measure life reports, DOE maintains the same ballast lifetime of 49,054 hours in its NOPR analysis. DOE also found in a separate measure life report that the average fixture and ballast in the residential sector lasts for 15 years. Therefore, in its residential sector analysis for GSFL, DOE established 15 years as the average ballast lifetime in the residential sector,[46] and an average annual operating lifetime of 789 hours. The ballast's average hours of operation over its service lifetime is therefore 11,835 hours in the residential sector.

b. Lamp Lifetime

When possible, DOE used manufacturer literature to measure lamp lifetimes, as in the March 2008 ANOPR. 73 FR 13620, 13662 (March 13, 2008). When published manufacturer literature was not available (as for some IRL), DOE derived lamp lifetimes as part of the engineering analysis (section V.C.4.b). DOE based its calculations of GSFL lifetime for the base and standards cases on lamp operating times of 3 hours per start in the March 2008 ANOPR LCC analysis. 73 FR 13620, 13662 (March 13, 2008). In comments, NEMA supported the 3 hours per start operating time for both the base and standards cases, but also argued that while lamps are started every 12 hours in commercial and industrial applications, the increasing use of occupancy sensors is leading to shorter start cycles. (NEMA, No. 22 at p. 23) DOE did not receive any other comments about using a GSFL operating time of 3 hours per start. Therefore, DOE retained the assumption of 3 hours per start in the NOPR LCC analysis for both the base and standards cases. In addition, DOE researched the impact of occupancy sensors on start cycle lengths. However, DOE was unable to obtain significant information with which it could quantify this effect.

As in the March 2008 ANOPR, DOE also considered in the NOPR analysis the impact of group re-lamping practices on GSFL lifetime in the commercial and industrial sectors. 73 FR 13620, 13662 (March 13, 2008). DOE assumed that a lamp subject to group re-lamping operates for 75 percent of its rated lifetime, an estimate obtained from the 2000 Ballast Rule.[47] By considering lamp rated lifetimes and the prevalence of group versus spot re-lamping practices, DOE derived an average lifetime for a GSFL. This ranged from 91 percent of rated lifetime for 8-foot single pin slimline lamps to 94 percent of rated lifetime for 4-foot medium bipin lamps. See chapter 8 of the TSD for further details.

As stated above, DOE is using 15 years as the estimated fixture and ballast lifetime in the residential sector for purposes of its analyses. If one calculates the lifetime of the baseline GSFL lamp in the residential sector by dividing the life in hours by the average operating hours of a GSFL in the residential sector (789 hours), one finds that the baseline lamp should live for 19 years. Because the lifetime of the baseline lamp is longer than the average lifetime of a fixture and ballast, DOE assumes that the ballast or fixture lifetime limits the lifetime of an average lamp in the residential sector. DOE is aware that there are certain rooms in residential buildings where GSFL are operated for much longer than 789 hours per year; in particular, GSFL are operated for approximately 1,210 hours per year in kitchens of single-family detached households. Therefore, DOE has conducted the residential sector analysis under average operating hours and high operating hours. Under average operating hours (789 hours per year), DOE assumes that lamp lifetime of the baseline-case and standards-case lamps is limited to 11,835 hours or 15 years, due to a ballast or fixture failure. Thus, in this situation, the lamp failure event does not occur; only the ballast failure event occurs. See section V.D.14 for a description of lamp purchase events.

DOE recognizes that although some consumers do not experience a lamp failure in the residential sector, consumers whose operating hours yield a lamp lifetime that is shorter than that of the fixture or ballast do need to replace their lamp occasionally. DOE

[44] U.S. Department of Energy, Energy Information Administration, *Annual Energy Outlook 2008 with Projections to 2030* (June 2008). Available at: *http://www.eia.doe.gov/oiaf/aeo/excel/aeotab_3.xls*.

[45] GDS Associates, Inc., Engineers and Consultants, *Measure Life Report: Residential and Commercial/Industrial Lighting and HVAC Measures* (The New England State Program Working Group) (2007).

[46] Economic Research Associates, Inc., and Quantec, LLC., *Revised/Updated EULs Based on Retention and Persistence Studies Results* (Southern California Edison) (2005).

[47] U.S. Department of Energy, Office of Energy Efficiency and Renewable Energy, ''Energy Conservation Program for Consumer Products: Technical Support Document: Energy Efficiency Standards for Consumer Products: Fluorescent Lamp Ballast Proposed Rule: Appendix A'' (Jan. 2000) A–19.

assumes the shortest lifetime of the baseline lamp, using the highest operating hours for GSFL in the LMC of 1,210 hours per year (as in kitchens), is approximately 12.5 years. When a baseline lamp is replaced at 12.5 years, the fixture and ballast have another 2.5 years of life remaining. DOE assumes that when fixtures or ballasts are discarded, their associated lamps are also discarded at the same time. Therefore, for GSFL in the residential sector, the longest useful life of the baseline replacement lamp would be 2.5 years or 1,972 hours. At the end of this lifetime, the ballast and fixture are replaced. Therefore, for the lamp replacement event for a GSFL in the residential sector in a high operating hours scenario (1,210 hours per year), the lifetime of the baseline lamp is assumed to be 1,972 hours or 2.5 years, and DOE assumes that the ballast failure event does not occur. DOE requests comment on the typical service life of a GSFL in the residential sector.

10. Discount Rates

In the March 2008 ANOPR, DOE derived residential discount rates by identifying all possible debt or asset classes that might be used to purchase replacement products, including household assets that might be affected indirectly. 73 FR 13620, 13663 (March 13, 2008). DOE estimated the average shares of the various debt and equity classes in the average U.S. household equity and debt portfolios using data from the SCFs from 1989 to 2004. DOE used the mean share of each class across the six sample years as a basis for estimating the effective financing rate for replacement equipment. DOE estimated interest or return rates associated with each type of equity and debt using SCF data and other sources. The mean real effective rate across the classes of household debt and equity, weighted by the shares of each class, is 5.6 percent.

For the commercial sector and industrial sector, DOE derived the discount rate from the cost of capital of publicly-traded firms in the sectors that purchase lamps. To obtain an average discount rate value for the commercial sector, DOE used data from CBECS 2003, which provides market-share data by type of owner. Weighting each ownership type by its market share, DOE estimated the average discount rate for the commercial sector to be 6.2 percent. Similarly, the industrial sector discount rate was derived to be 7.5 percent. 73 FR 13620, 13663 (March 13, 2008).

The Joint Comment stated that, in the past, NRDC has argued that a 2 to 3 percent real discount rate should be used in the LCC. (Joint Comment, No. 23 at p. 22) It also stated that ACEEE and others have supported the weighted average cost of capital approach. In general, the Joint Comment stated that if DOE continues with using the weighted cost of capital approach, the agency should make sure its calculations are updated, as current economic conditions will influence agency estimates for discount rates over the analysis period. (Joint Comment, No. 23 at p. 22) In consideration of the above comments (and absent any evidence to the contrary), DOE agrees with ACEEE and others in the Joint Comment that the weighted average cost of capital approach described above is the most accurate way of establishing an appropriate consumer discount rate for the LCC analysis. For this NOPR, DOE was not able to use the most up-to-date information to update the residential discount rate, because the 2007 SCF survey was not available at the time of publication. However, because the rates for various forms of credit carried by households in these years were established over a range of time, DOE believes they are representative of rates that may be in effect in 2012. DOE is not aware of any other nationally representative data source that provides interest rates from a statistically valid sample. Therefore, DOE continued to use the above approach and results for today's proposed rule. According to the Federal Reserve Board Web site, the 2007 SCF survey may be available in the first quarter of 2009.[48] Contingent on this data's release in a timely manner, DOE will attempt to incorporate the 2007 SCF survey in the final rule of this rulemaking.

Despite the limitations associated with its residential analysis, DOE was able to update certain sources used to compute the commercial and industrial sector discount rates. Specifically, DOE applied the 2008 Damodaran Online Data, the 2008 implicit price deflators from the U.S. Department of Commerce, the 2007 Value Line Investment Survey data, information from the 2008 OMB Circular No. A–94, and 2008 State and local bond interest rates. However, DOE continued to use data from CBECS 2003, which provides market-share data by type of owner to obtain an average discount rate value for the commercial sector. DOE is not aware of any other nationally representative data source that provides market-share data by type of owner and, therefore, is continuing to use this source of data in today's proposed rule. DOE computed the new discount rates to be 7.0 percent in the commercial sector and 7.6 percent in the industrial sector. For further details on discount rates, see chapter 8 and appendix 8C of the TSD.

11. Analysis Period

The analysis period is the span of time over which the LCC is calculated. For the March 2008 ANOPR, DOE used the longest baseline lamp life in a product class divided by the annual operating hours of that lamp as the analysis period. 73 FR 13620, 13663 (March 13, 2008). During Monte Carlo simulations for the LCC analysis, DOE selected the analysis period based on the longest baseline lamp life divided by the annual operating hours chosen by Crystal Ball. For the NOPR analysis, DOE retained this methodology for IRL and GSFL in the commercial and industrial sectors. However, for GSFL in the residential sector, the analysis period is based on the useful life of the baseline lamp for a specific event. Specifically, for the lamp replacement event, the analysis period is 2.5 years, and for the lamp and ballast replacement and new construction event, the analysis period is 15 years. DOE requests comment on the analysis period used for the residential sector analysis. See section V.D.9.a of this notice for more information on the useful life of the baseline lamp in all residential sector purchase events.

12. Effective Date

For purposes of DOE's analyses, the effective date is the date when a new standard becomes operative. DOE intends to publish the final rule for this rulemaking in June 2009. 73 FR 13620, 13663 (March 13, 2008). In accordance with sections 325(i)(3) and (i)(5) of EPCA, the effective date of any new or amended energy conservation standard for these lamps shall be 3 years after the final rule is published, which would be June 2012 for this rulemaking. (42 U.S.C. 6295(i)(3) and (i)(5)) DOE performed its LCC analysis based upon an assumption that each consumer would purchase a new product in the year that the standard takes effect.

13. Payback Period Inputs

The payback period (PBP) is the amount of time a consumer needs to recover the assumed additional costs of a more-efficient product through lower operating costs. As in the March 2008 ANOPR, DOE used a ''simple'' PBP for the NOPR, because the PBP does not take into account other changes in operating expenses over time or the time value of money. 73 FR 13620, 13663

[48] *http://www.federalreserve.gov/PUBS/oss/oss2/2007/scf2007home_modify.html.*

(March 13, 2008). As inputs to the PBP analysis, DOE used the total installed cost of the product to the consumer for each efficacy level, as well as the first year annual operating costs for each efficacy level. The calculation requires the same inputs as the LCC, except for energy price trends and discount rates; only energy prices for the year the standard takes effect (2012 in this case) are needed. 73 FR 13620, 13663 (March 13, 2008).

14. Lamp Purchase Events

In the March 2008 ANOPR, DOE described five types of events that would prompt a consumer to purchase a lamp. 73 FR 13620, 13664 (March 13, 2008). These events are described below along with changes for the NOPR analysis. Of particular note, DOE conducted a number of new analyses for the NOPR which assessed lamp failure, ballast failure, and new construction events for residential sector GSFL. In addition, though described primarily in the context of GSFL, lamp purchase events can be applied to IRL as well. However, considering that IRL are generally not used with a ballast the only lamp purchase events applicable are lamp failure (event I) and new construction and renovation (event V).

- *Lamp Failure* (Event I): This event reflects a scenario in which a lamp has failed (spot relamping) or is about to fail (group re-lamping). In the base case, identical lamps are installed as replacements. In the standards case, the consumer installs a standards-compliant lamp that is compatible with the existing ballast. When a standards-compliant lamp for that ballast is not available, the consumer purchases a new lamp and ballast. For the NOPR, DOE added a residential sector GSFL lamp failure event.
- *Standards-Induced Retrofit* (Event II): This event occurs when a consumer realizes that its T12 lamp will fail in the near future and installs a standards-compliant lamp and ballast. In the base case, the consumer would have installed only a new lamp. This event applies only to T12 commercial and industrial users because there are certain lamp standard levels that a T12 cannot meet. This event does not apply to T12 residential users because these users would not proactively replace their T12 system before the T12 lamp fails.
- *Ballast Failure* (Event III): In the March 2008 ANOPR, DOE assumed that failed ballasts would be replaced with electronic ballasts because standards set by the 2000 Ballast Rule and EPACT 2005 ban the sale of magnetic 4-foot medium bipin and 8-foot single pin slimline ballasts beginning in 2010. 73 FR 13620, 13664 (March 13, 2008). NEMA commented that the 2000 Ballast Rule allows the continued sale of residential magnetic ballasts as well as magnetic cold-temperature ballasts, which operate a large portion of the installed base of T12 recessed double contact high-output lamps. (NEMA, No. 22 at p. 20) In response, DOE has assumed that failed magnetic HO ballasts would be replaced with magnetic ballasts in the base case for the NOPR analysis. DOE also assumed that magnetic ballasts would be purchased in the event of a ballast or fixture failure in the residential sector base case for the NOPR analysis because residential systems are commonly T12 magnetic systems currently. In addition, standards established in the 2000 Ballast Rule and the Energy Policy Act of 2005 (EPACT 2005, Pub. L. 109–58) will allow magnetic ballasts to continue to be sold in the residential sector after 2010. See the engineering analysis (section V.C) for further details.
- *Ballast Retrofit* (Event IV): This event applies only to T12 users because, according to industry experts, the majority of ballast retrofits occur for consumers with T12 systems. Consumers retrofitting their ballasts commonly do so to save energy, and T8 systems are generally more efficacious than T12 systems.
- *New Construction and Renovation* (Event V): This event encompasses all fixture installations where the lighting design will be completely new or can be completely changed. The scenario applies only to baseline lamps that are usually used in new construction and renovation (4-foot T8 lamps, 4-foot T12 lamps in the residential sector, 8-foot single pin slimline T8 lamps, and 8-foot recessed double contact HO T12 lamps). For the NOPR analysis, DOE assumed that 4-foot T8 lamps with electronic ballasts would be chosen during the new construction and renovation event for the 4-foot T12 residential baseline.

E. National Impact Analysis—National Energy Savings and Net Present Value Analysis

1. General

DOE's NIA assesses the national energy savings (NES) and the national net present value (NPV) of total customer costs and savings that would be expected to result from new standards at specific efficacy levels.

DOE uses the NIA spreadsheets to calculate energy savings and NPV based on the annual energy consumption and total installed cost data employed in the LCC analysis. DOE forecasts the energy savings, energy cost savings, equipment costs, and NPV for each product class from 2012 through 2042. The forecasts provide annual and cumulative values for all four output parameters. DOE also examines impact sensitivities by analyzing various lamp shipment scenarios (such as Roll-up and Shift).

DOE develops a base-case forecast for each analyzed lamp type which characterizes energy use and consumer costs (lamp purchase and operation) in the absence of new or revised energy conservation standards. To evaluate the impacts of such standards on these lamps, DOE compares the estimated base-case projection with projections characterizing the market if DOE did promulgate new or amended standards (*i.e.*, the standards case). In characterizing the base and standards cases, DOE considers historical shipments, the mix of efficacies sold in the absence of any new standards, and how that mix might change over time.

Inputs and issues associated with the NIA are discussed immediately below.

a. Overview of NIA Changes in This Notice

Based on the comments it received on the March 2008 ANOPR, DOE made a number of changes to the NIA. Table V.3 summarizes the approach and data DOE used to derive the inputs to the NES and NPV analyses for the March 2008 ANOPR, as well as the changes it made for this notice. Following the table, DOE details those inputs and the changes, and summarizes and responds to each of the NIA-related comments it received. See TSD chapters 10 and 11 for further details.

TABLE V.3—APPROACH AND DATA USED TO DERIVE THE INPUTS TO THE NATIONAL ENERGY SAVINGS AND NET PRESENT VALUE ANALYSES

Inputs	2008 ANOPR description	Changes for the proposed rule
Shipments	Annual shipments from shipments model	See Table V.4 and Table V.5.

TABLE V.3—APPROACH AND DATA USED TO DERIVE THE INPUTS TO THE NATIONAL ENERGY SAVINGS AND NET PRESENT VALUE ANALYSES—Continued

Inputs	2008 ANOPR description	Changes for the proposed rule
Stock of lamps	Established based on the projected 2011 lamp stock, the service life of lamps and/or ballasts, and the annual shipments. The 2011 stock is based on historical shipments and projected shipments from 2006 to 2011. (See ANOPR TSD chapter 10, shipments analysis.).	Established based on 2005 lamp stock, rather than 2011. Considered market penetration of emerging technologies. See Table V.4 and Table V.5 for additional detail.
Effective date of standard	2012	No change.
Analysis period	2012 to 2042	No change.
Unit energy consumption (kWh/yr).	Established in the energy-use characterization, ANOPR TSD chapter 6, by lamp or lamp-and-ballast design and sector.	No change.
Total installed cost	Established in the product price determination, ANOPR TSD chapter 7 and the LCC analysis, ANOPR chapter 8, by lamp-and-ballast designs.	Added costs of retrofit kit and labor for replacing a 8-foot SP slimline system with two 4-foot MBP systems.
Electricity price forecast	*AEO2007* forecasts (to 2030) and extrapolation for beyond 2030. (See ANOPR TSD chapter 8.).	Updated for *AEO2008*.
Energy site-to-source conversion.	Conversion varies yearly and is generated by *AEO2007* forecasts (to 2030) of electricity generation and electricity-related losses. Conversion factors for beyond 2030 are extrapolated.	Conversion varies yearly and is now generated by DOE/EIA's NEMS program (a time-series conversion factor; includes electric generation, transmission, and distribution losses). Conversion factors for beyond 2030 are held constant.
HVAC interaction savings	6.25 percent of total energy savings in the commercial sector.	No change.
Rebound effect	1 percent of total energy savings in the commercial and industrial sectors. 8.5 percent of total energy savings in the residential sector.	No change.
Discount rate	3 and 7 percent real	No change.
Present year	Future costs and savings are discounted to 2007	No change.

2. Shipments Analysis

Lamp shipments are an important input to the NIA. In the March 2008 ANOPR, DOE followed a four-step approach to forecast shipments for GSFL and IRL. 73 FR 13620, 13668 (March 13, 2008). First, DOE used NEMA's historical shipment data from 2001 to 2005 to estimate total historical (NEMA members and non-NEMA members) shipments of each analyzed lamp type in the commercial, industrial, and residential sectors. Second, using these historical shipments, DOE linearly extrapolated shipments to 2011. Then, based on average service lifetimes, DOE estimated a stock of lamps in 2011 for each lamp type. Next, DOE forecasted lamp (and ballast for GSFL) shipments from 2012 to 2042 (the NIA analysis period) based on four market events: (1) New construction; (2) ballast failure (GSFL only); (3) lamp replacement; and (4) standards-induced retrofit (for the standards case). Lastly, because these shipments depend on lamp and lamp-system properties (*e.g.*, lifetime and lumen output), DOE developed base-case and standards-case market-share matrices. These matrices determine the forecasted technology mixes in the lamp stock and shipments.

Table V.4 and Table V.5 summarize the approach and data DOE used for GSFL and IRL, respectively, to derive the inputs to the shipments analysis for the March 2008 ANOPR, as well as the changes DOE made for the NOPR. A discussion of the inputs and the changes follows.

TABLE V.4—APPROACH AND DATA USED TO DERIVE THE INPUTS TO GSFL SHIPMENTS ANALYSIS

Inputs	2008 ANOPR description	Changes for the proposed rule
Historical shipments	2001–2005 shipment data provided publicly by NEMA. Assumed NEMA data represented 90 percent of GSFL shipments.	Calibrated 2006–2007 forecasted shipments based on confidential historical shipment data NEMA provided for those years.
Lamp inventory	Calculated lamp inventory in 2011 by linearly projecting NEMA's 2001–2005 historical shipment data. Then used growth and shipment assumptions to establish lamp inventory from 2012 to 2042.	Did not use linear projections; calculated stock in 2005. Then used growth, emerging technologies, and shipment assumptions to establish lamp inventory from 2006 to 2042.
Growth	Shipment growth driven by lumen demand. Lumen demand projected from historical CBECS commercial floor space growth.	Based commercial and residential growth on *AEO2008* estimates for future floor space growth. For the residential sector, modeled variations in number of lamps per new home. For the industrial sector, projected floor space growth using MECS.
T5 lamps	Not included	Shipments modeled by assuming T5 lamps used in new construction and in conversions from 4-foot medium bipin, 8-foot SP slimline, and 8-foot RDC HO.

TABLE V.4—APPROACH AND DATA USED TO DERIVE THE INPUTS TO GSFL SHIPMENTS ANALYSIS—Continued

Inputs	2008 ANOPR description	Changes for the proposed rule
T12 ballasts	Assumed no T12 magnetic ballasts shipped after 2009 for 8-foot SP slimline and 4-foot MBP lamps. Did not consider T12 electronic ballasts for 8-foot SP slimline and 4-foot MBP lamps.	Assumed no T12 magnetic ballasts shipped after 2010 for commercial 4-foot MBP and 8-foot SP slimline. Also assumed 4-foot MBP and 8-foot SP slimline electronic T12 ballasts shipped through 2042. For 8-foot T12 RDC HO and residential 4-foot T12 MBP, assumed magnetic ballasts are shipped through 2042.
Sectors analyzed	Commercial and industrial	Included residential sector in analysis.
Base-case emerging technologies.	None included	Developed two base-case scenarios, one of which modeled the market penetration of LEDs based on projected payback period.
Market share matrices	Developed product distributions based on interviews and catalog data.	Revised product distributions based on comments, subsequent interviews, and further catalog research.
Standards case scenarios	Shift and Roll-up scenarios analyzed. Assumed all consumers will attempt to maintain lumen output by either moving to lower ballast factors or reduced-wattage lamps in the standards case.	Revised the Shift and Roll-up scenarios. Developed a standards-case scenario (Market Segment-Based Lighting Expertise scenario) to characterize consumers who, based on lighting expertise, will not migrate to lower ballast factors or reduced-wattage lamps to maintain lumen output.

TABLE V.5—APPROACH AND DATA USED TO DERIVE THE INPUTS TO IRL SHIPMENTS ANALYSIS

Inputs	2008 ANOPR description	Changes for the proposed rule
Historical shipments	2001–2005 shipment data provided publicly by NEMA. Assumed NEMA data represented 85 percent of IRL shipments.	Calibrated 2006–2007 projected shipments based on confidential historical shipment data NEMA provided for those years.
Lamp inventory	Calculated stock in 2011 by linearly projecting NEMA's 2001–2005 historical shipment data. Then used growth assumptions to establish lamp inventory from 2012 to 2042.	Did not use linear projections; calculated stock in 2005. Then used growth and emerging technologies assumptions to establish lamp inventory from 2006 to 2042.
Growth	Shipment growth driven by socket growth. Socket growth projected from historical CBECS commercial floor space and RECS residential building growth.	Based growth on *AEO2008* estimates for future commercial floor space and residential buildings. Also accounted for trend of increasing sockets per home.
Sectors analyzed	Commercial and residential	No change.
Base case reflector compact fluorescent lamps (R–CFL) and emerging technologies.	Assumed 0 percent stock penetration in 2012 and 50 percent stock penetration in 2042.	Developed two base-case scenarios modeling the market penetration of LED, CMH, and R–CFL based on projected payback period.
Market share matrices	Considered mix of technologies consumers select in the base case and standards case, as well as each of the scenarios analyzed.	Revised market-share matrices to reflect its changes in the scenarios analyzed and engineering analyses.
Standards-case scenarios	Modeled the Roll-up scenario. Analyzed two standards-case sensitivity scenarios: One modeling consumer movement to exempted BR lamps and another modeling a 10 percent increase in lumen output. Did not consider additional migration to R–CFL in the standards case.	Modeled both Roll-up and Shift scenarios. Revised BR lamp sensitivity scenario, creating two new standards-case scenarios also accounting for additional migration to R–CFL: "Product Substitution" and "No Product Substitution."

a. Lamp Inventory

In the March 2008 ANOPR, DOE linearly extrapolated NEMA's historical lamp shipments from 2005 to 2011 to establish a 2011 installed stock of GSFL and IRL using each lamp's average service lifetime. In its written comments, NEMA argued that DOE's linear extrapolation approach does not account for market dynamics and is vulnerable to certain temporal biases inherent in NEMA's historical data. For example, if a new product was introduced and rapidly gained market share during this historical shipment period, a linear extrapolation based on this data could exaggerate the growth rate of this product in future years. Likewise, any new products introduced would be excluded from the future results. For example, Philips noted at the public meeting that because DOE extrapolated shipment data from 2001 to 2005 to establish its lamp stocks, it may have discounted migration to T5 lamps, which have only started to grow in the last couple of years. Thus, the commenter argued that DOE may have overstated the 2011 stock of some types of lamps (*e.g.*, T8 lamps), while understating others (*e.g.*, T5 lamps). (NEMA, No. 22 at pp. 23–25, 31; Public Meeting Transcript, No. 21 at p. 246)

On the other hand, NEMA suggested that a linear extrapolation is sometimes appropriate for lamps with small and stable market shares, such as 8-foot T8 recessed double contact HO lamps. However, for large and variable product classes, NEMA urged DOE to model lamp types against specific economic factors and technical relationships. (NEMA, No. 22 at p. 24)

DOE agrees that a linear extrapolation may generally be too limited in its application, and that lamp shipment forecasts from 2006 to 2011 should incorporate both market dynamics and macroeconomic factors. Therefore, DOE is no longer using a linear extrapolation

from historical data. Instead, for this NOPR, DOE calculated an installed stock of lamps in 2005 and applied growth, replacement rate, and emerging technologies assumptions to develop shipments estimates from 2006 to 2042. In addition, DOE received confidential shipment information from NEMA for 2006 and 2007, and, when possible, calibrated the shipments model to match that information. The assumptions used to develop shipment forecasts are discussed in the following sections.

b. Shipments Growth

To develop the shipments models for both GSFL and IRL, DOE applied several growth rate assumptions. In the March 2008 ANOPR, DOE modeled GSFL shipments from 2012 to 2042 by projecting lumen growth based on lumen demand serviced by each lamp type in the commercial and industrial sectors. For IRL, DOE projected shipments through 2042 based on growth in the number of sockets using IRL in the commercial and residential sectors. DOE based forecasted lumen and socket growth for GSFL and IRL on historical residential building growth from RECS and historical commercial and industrial floor space growth from CBECS and MECS.

DOE received a number of comments in response to its growth rate methodology. The majority of these comments fell into three categories: (1) The limits of basing lamp stock growth on historical floor space growth; (2) the increasing number of lamps per household; and (3) the wider spacing of more-efficient light fixtures. Below is a discussion of those comments. For further details regarding GSFL and IRL growth rate assumptions, see TSD chapter 10.

i. Floor Space and Building Growth

NEMA stated that the commercial and residential growth rates DOE used in the March 2008 ANOPR (based on total floor space from CBECS in RECS) have likely led to an overstatement of lamp shipments and stock, given the deteriorating economy. (NEMA, No. 22 at pp. 23–24) DOE understands NEMA's concerns and no longer establishes its commercial and residential growth from historical floor space growth. Instead, for this NOPR, DOE modeled commercial floor space and residential buildings growth based on *AEO2008*, which estimates year-to-year commercial floor space and residential building growth. Because *AEO2008* takes into account future trends in economic growth, DOE was able to incorporate forecasts of macroeconomic conditions in its growth forecast. However, because *AEO* does not provide industrial floor space forecasts, DOE used historical MECS floor space values to establish a growth rate for the industrial sector.

ii. Lamps per Household

The Joint Comment stated that DOE's growth forecasts omitted an important factor driving IRL sales: a trend toward an increasing number of recessed fixtures per home in new construction and existing home renovation. Because this trend is excluded from DOE's analysis, which assumed growth based on floor space growth, the Joint Comment argued that IRL shipments are likely understated. NEMA also stated that it has seen a trend toward increasing light points per home. To address this development, the Joint Comment recommended DOE obtain additional data on sales trends of these lamps and not assume recessed socket growth was directly proportional to floor space growth. The Joint Comment, PG&E, and ACEEE cited several studies supporting this claim. (Joint Comment, No. 23 at p. 17; Public Meeting Transcript, No. 21 at pp. 287–288; NEMA, No. 22 at p. 31)

DOE agrees with the Joint Comment that the increasing popularity of recessed fixtures in new homes will drive IRL sales growth faster in the residential sector. New homes are likely to install more IRL than those installed in older homes, and older homes may be renovated to include more recessed cans and, thus, more reflector lamps. Therefore, DOE conducted an analysis that estimated the average number of recessed cans in homes between 2005 and 2042. Using California data [49] on recessed cans per home broken out by home age, DOE assumed new homes constructed after 2005 would install the same number of recessed cans as homes constructed between 2001 and 2005. DOE also assumed that half of the homes constructed before 2001 would be renovated by 2042 to have an equal number of recessed cans as newly constructed homes. DOE estimated the distribution of homes by age using U.S. Census data [50] on new building starts in the residential sector. DOE estimated new construction and the number of future homes constructed in each year from *AEO2008*. Using this data, DOE estimated that the average number of recessed cans per home in 2005 was 4.82, and the average number of recessed cans per home in 2042 will be 8.52. As noted above, DOE also agrees with NEMA that growth rates should include forecasts of economic conditions. Therefore, to estimate the growth rate in each year, DOE multiplied the number of recessed cans in homes by the projected stock of homes according to *AEO2008*. Combining these two sources, DOE predicts an average growth rate of sockets of 2.6 percent between 2006 and 2042, compared to the 1.6 percent DOE estimated in the March 2008 ANOPR.

DOE estimated the GSFL growth rate in the residential sector using a methodology similar to that which it employed for IRL in the residential sector. Instead of using the number of recessed cans per home by home age, DOE used the number of T8 and T12 lamps by home age. Again, DOE assumed that the same number of T8 and T12 lamps per home would be installed in new homes as those installed between 2001 and 2005, and that half of homes built before 2001 would be renovated by 2042 to have the same number of T8 and T12 lamps as newly constructed homes. DOE estimated that the average number of T8 and T12 lamps per home in 2005 was 4.5, and the average number in 2042 will be 4.7. Combining this growth estimate with *AEO2008*'s projected growth in the residential home stock yields an average growth rate of 1 percent between 2006 and 2042 for GSFL in the residential sector. Compared to IRL, the lower GSFL growth rate reflects the lower growth rate of T8 and T12 lamps per home versus recessed cans. (In the March 2008 ANOPR, DOE did not consider the residential sector for GSFL.)

iii. Wider Spacing of More-Efficient Fixtures

In its written comments, NEMA suggested that DOE should assume a slower growth rate in the commercial building IRL socket base to account for wider spacing of lighting fixtures and/or greater use of high-output systems. (NEMA, No. 22 at p. 31) While DOE appreciates NEMA's comment, it was unable to find (and the commenter did not provide) any information related to wider spacing between fixtures, and, therefore, DOE did not change growth estimates to account for this potential effect.

[49] RLW Analytics, Inc., ''California Statewide Residential Lighting and Appliance Efficiency Saturation Survey'' (August 2005) (Last accessed on Sept. 29, 2008). Available at: *http://www.calresest.com/docs/2005CLASSREPORT.pdf.*

[50] U.S. Census Bureau, Manufacturing and Construction Division, ''New Privately Owned Housing Unit Starts'' (2008) (Last accessed on Sept. 29, 2008). Available at: *http://www.census.gov/const/startsan.pdf.*

c. Base-Case Scenarios: Emerging Technologies and Existing Technologies

In the March 2008 ANOPR, DOE estimated that by 2042 R–CFL and emerging technologies, (*e.g.*, such as LED lamps, and ceramic metal halide (CMH) lamps) would compose 50 percent of IRL sockets in the installed base. 73 FR 13620, 13670 (March 13, 2008). For IRL, DOE accounted for the impact of emerging technologies by deducting their market share in each year over the analysis period from the installed base of lamps, effectively reducing the size of the market affected by the standards proposed in this rulemaking. In the March 2008 ANOPR, DOE did not account for any penetration of emerging technologies into the GSFL market, and requested comment on if and how it should incorporate their effects into its analyses.

DOE received several comments on its consideration of emerging technologies. NEMA argued that the performance improvements of CMH will drive the technology's market penetration into the GSFL market. NEMA also asserted that LED lamps could displace GSFL shipments to some extent by 2042. (NEMA, No. 22 at pp. 24–26) As for emerging technologies in the IRL market, NEMA commented that LED lamps could also displace shipments of IRL to some extent by 2042, particularly in the residential sector. NEMA stated that the shift from halogen IRL to CMH is already occurring in the retail market. Industrial Ecology stated that an integrated PAR CMH lamp would be expected to replace other IRL PAR lamps in the commercial retail market. (NEMA, No. 22 at pp. 24–26; Public Meeting Transcript, No. 21 at pp. 307–309) NEMA argued that these emerging technologies will significantly affect future lamp shipments and reduce the NPV results of standards for both GSFL and IRL. To more accurately forecast the impact of emerging technologies, NEMA suggested that DOE should examine historical price and performance points of R–CFL, as well as product cycles for other advanced technology equipment. (NEMA, No. 22 at pp. 24–26) Industrial Ecology suggested that DOE should use semiconductor industry data to assess the manufacturing capacity for solid state lamps. (Public Meeting Transcript, No. 21 at p. 311–312)

DOE agrees that emerging technologies could penetrate GSFL and IRL markets and significantly affect shipment forecasts and NIA results. Therefore, for the NOPR, DOE has revised its analysis of emerging technologies within the IRL market and now accounts for emerging technologies within the GSFL market as well. These emerging technologies already are, or eventually will likely be, significantly more efficacious and longer lasting than the lamps they replace. However, to calculate the energy savings and NPV benefits due to the penetration of an emerging technology, DOE must accurately forecast the anticipated price and performance points of the individual technologies—a difficult and highly speculative task. Forecasts related to emerging technologies are inherently uncertain because they depend upon assumptions about future price, efficacy, and utility, none of which can be verified. Therefore, for the NOPR, DOE has chosen to analyze *two* base-case scenarios for both GSFL and IRL: (1) Existing Technologies, and (2) Emerging Technologies. DOE believes evaluating two base-case scenarios more completely characterizes the inherent uncertainty of the market penetration of the technologies and the consequent impact on NPV and NES. Incorporating emerging technologies in the base case does not affect the relative benefits of each TSL and prevents uncertain projections of market share, price, or performance from obscuring the benefits derived from more-efficient GSFL and IRL alone.

For these base-case scenarios, DOE estimated the market penetration of three specific technologies into the projected installed stock: (1) LED lamps; (2) CMH lamps; and (3) reflector CFL. In general, the Existing Technologies scenario only considers the market penetration of technologies that are currently readily available and have reached maturation in terms of price and efficacy. Specifically, DOE considers R–CFL in the Existing Technologies scenario within the IRL market. For GSFL, no technologies other than those covered by this rulemaking were analyzed in the Existing Technologies scenario. (DOE considers the migration to T5 lamps, a covered product, separately, as discussed in section V.E.2.d.)

In the Emerging Technologies scenario, DOE attempts to forecast the market penetration of mature technologies *and* those technologies that are still undergoing significant changes in price and efficacy. Specifically, DOE considered the market penetration of R–CFL, LED lamps, and CMH lamps in the Emerging Technologies scenario.

DOE generally followed a 5-step process for each scenario to estimate the market penetration of the analyzed technologies and account for their impact on NES and NPV. (Sector- and technology-specific aspects of DOE's methodology are described below and in TSD chapter 10.)

First, DOE developed price, performance, and efficacy forecasts for each of the analyzed technologies. DOE's methodology in generating these forecasts for each analyzed technology is described below. Second, using those estimates, DOE calculated the payback period (PBP) of each technology in the relevant sector using the difference between its purchase price, annual electricity cost, and annual lamp replacement cost relative to the lamp it replaces. (See TSD chapter 10 for further details.) Third, DOE used a relationship between PBP and market penetration to predict the market penetration of each technology in the relevant sector in every year from 2006 to 2042. Generally, lower PBP of a given lamp technology results in a greater predicted market penetration of that technology. DOE used a 5-year average of the market penetrations predicted by the relationship as its final market penetration. The 5-year average represents the time DOE assumed it takes products with lower PBPs to penetrate the market. Fourth, when necessary, DOE applied a scaling factor to the predicted market penetration to account for observed market trends. Fifth, DOE reduced the projected installed stock of covered products in each year by the value that corresponded to the highest level of market penetration achieved in each year by one of the analyzed technologies. Thus, the inclusion of R–CFL and other lamps using emerging technologies in the base case have the effect of lowering the energy savings of a potential new standard. For those covered lamps remaining, the cost-effectiveness of LCC savings and, thus, the relative cost effectiveness of each TSL is not affected.

Because the lamps employing emerging technologies are beyond the scope of the rulemaking, they are not considered design options to improving IRL or GSFL efficacy, but rather they may substitutes for the lamps covered in this rulemaking. In the Emerging Technologies base case, DOE uses its prices projections effectively as inputs into its shipments forecasts of its covered products, rather than forecasts of shipments of lamps employing the emerging technologies themselves. In this way, the price projections of the analyzed lamps using emerging technologies indirectly affect the NPV of the present rulemaking, despite not being a direct input into equipment prices. As stated previously, to acknowledge the uncertainty of price forecasts for lamps using emerging

technologies, DOE models two base-case scenarios.

i. General Service Fluorescent Lamps

For the Existing Technologies scenario, DOE believes that no mature technologies in the current market show the potential to significantly penetrate the GSFL market. (T5 lamps, previously considered an emerging technology, are now a covered product class.) Therefore, for the Existing Technologies scenario, DOE considered only the fluorescent technologies already covered by this rulemaking. Thus, except for the addition of T5 lamps, the Existing Technologies base case in this NOPR is the same as the base case in the March 2008 ANOPR.

In the GSFL Emerging Technology scenario, however, DOE separately considered the potential market penetration of two technologies: (1) LEDs (into the commercial, residential, and industrial sectors); and (2) CMH (into the commercial and industrial sectors).

For its analysis of LED market penetration, DOE found a commercially-available retrofit kit that included a LED replacement for a 4-foot medium bipin system. DOE used the retrofit kit as a current baseline from which to project future cost, efficacy, and price points. DOE interviewed an integrated circuit manufacturer to develop cost estimates for LED driver circuits. For cost estimates of other components, DOE used prices of existing LED products already on the market, which it modified in accordance with cost data and efficacy projections from DOE's Solid State Lighting Multi-Year Program Plan.[51] Lastly, using markup based on currently-available LED lamps, DOE was able to develop price and efficacy projections for the LED luminaire in the retrofit kit.[52] Following the 5-step process described above, DOE calculated a 41 percent market penetration rate of LED lamps into the 4-foot GSFL commercial sector by 2042. DOE assumed LED lamps penetrated only the new construction, renovation, and fixture replacement markets because these lamps would require their own specific fixtures. In the residential sector, the LED option did not have a low enough payback period to result in any market penetration.

DOE also analyzed the potential penetration of CMH into the GSFL market. DOE first estimated current CMH prices using a methodology similar to the methodology it used to estimate GSFL and IRL prices, as described in the product price determination. (See TSD chapter 7.) Industry experts informed DOE that CMH efficacies and lifetimes would increase over the next several years while prices would remain constant. Applying these lifetime and efficacy projections DOE compared CMH replacements to GSFL systems. As a result, DOE assumed no market penetration of CMH because it found that T5 lamp systems (standard output and high output) would always be less costly and more efficacious than projected CMH replacements. Given this information, DOE believes that it is likely that migration to CMH (from the GSFL market) will be dominated by the migration to standard-output and high-output T5 lamps.

ii. Incandescent Reflector Lamps

As with GSFL, DOE considered two base case scenarios for IRL: Existing Technologies and Emerging Technologies. Because DOE believes that R–CFL is a mature technology with relatively stable price points and efficacies, DOE considered R–CFL penetration into the residential market in the Existing Technologies scenario. In contrast, for the Emerging Technologies scenario, DOE considered the market penetration of R–CFL, LED, and CMH lamps in both the residential and commercial sectors. DOE separately calculated the penetration of each technology into the IRL stock by using the 5-step process described above.

For R–CFL, DOE developed price forecasts based on historical pricing trends of CFL and R–CFL, using a methodology similar to the methodology DOE used to estimate GSFL and IRL prices, as described in the product price determination. (See TSD chapter 7.) DOE assumed no future change in efficacy. Using this data, DOE found the market penetration predicted by the PBP relationship. However, PG&E argued that R–CFL are not always suitable substitutes for IRL because they lack dimming capabilities and their beam width is too broad. (Public Meeting Transcript, No. 21 at pp. 289, 321) Industrial Ecology commented that dimmable R–CFL do in fact exist, while PG&E noted that these lamps have little market share. (Public Meeting Transcript, No. 21 at pp. 291, 321) DOE agrees that R–CFL may not always be appropriate substitutes for IRL, due to differences in form factor, beam spread, color quality, size and dimming capability. DOE observed that the actual market penetration of CFL replacements for A-line incandescent lamps thus far has been approximately 40 percent of the penetration predicted by the PBP-penetration relationship. Therefore, DOE applied these same scaling-factor reductions of 40 percent and 36 percent in calculating the market penetration of R–CFL into the IRL market for the residential and commercial sectors, respectively.

For LED and CMH lamps in the IRL market, DOE developed price and efficacy forecasts using a methodology similar to the one described above for GSFL. DOE did not apply the scaling factor reduction to the predicted LED and CMH market penetration rates that it used for the R–CFL analysis. DOE believes the substitutability problems that arise when R–CFL replace IRL do not apply when LED and CMH replace IRL.

By the methodology described, DOE arrived at market penetration values (and market size reductions) for each base-case scenario. For the Existing Technology scenario, 2042 R–CFL penetration reached 38 percent in the residential sector and 20 percent in the commercial sector. (This was the highest market penetration because it was the only technology analyzed for the scenario.) For the Emerging Technology scenario, LED reached the highest market penetration of any analyzed technology in both the residential sector and the commercial sector. DOE's analysis found LED lamps could penetrate 40 percent and 82 percent of the IRL installed stock by 2042 in the residential and commercial sector, respectively. DOE's results support a comment by Industrial Ecology stating that emerging technologies will enter the commercial market first. (Public Meeting Transcript, No. 21 at p. 308) This effect occurs because there are higher installation and operating costs in the commercial sector relative to the residential sector, resulting in lower PBPs and faster migration to emerging technologies. Again, DOE used these results to effectively reduce the size of the IRL market for its analysis.

d. Fluorescent Market Sectors Analyzed

In the March 2008 ANOPR, DOE modeled both the commercial and industrial market sectors to generate GSFL shipments forecasts. DOE received several comments on its decision not to model the residential sector.

[51] *Multi-Year Program Plan FY'09 to FY'14: Solid-State Lighting Research and Development* (March 2008). Available at: *http://www.netl.doe.gov/ssl/PDFs/SSLMYPP2008_web.pdf.*

[52] Because they are based on an existing LED retrofit kit, DOE's projections did not consider innovations in form factor on OLED tyechnology which could improve the possible payback period for solid-state lighting technologies.

GE commented that DOE should model the residential sector because it makes substantial use of less-efficacious T12 lamps, which could be effectively eliminated by new standards. GE estimated that by 2012, roughly 20 percent of GSFL shipments will be T12 lamps, and more than half of those will go to residential consumers. PG&E stated that California codes only recently required higher-efficacy lamps in new construction; therefore, 4-foot T12 lamps with magnetic ballasts remain a large part of the residential installed stock. (Public Meeting Transcript, No. 21 at pp. 276–279)

The Joint Comment asserted that a separate analysis for the residential sector is unnecessary; however, the Joint Comment recommended that residential applications should be accounted for in DOE's LCC analysis based on the proportion of lamp sales, operating hours, and electric rates. The Joint Comment stated DOE should use caution in apportioning all sales through do-it-yourself (DIY) stores, such as Home Depot and Lowe's, to the residential sector. (Joint Comment, No. 23 at p. 10) PG&E and NEMA commented that approximately 20 percent of DIY business is commercial. (NEMA, No. 22 at p. 30; Public Meeting Transcript, No. 21 at p. 290)

DOE agrees that it should model the residential sector to more accurately capture overall consumer behavior and the market impact of standards. DOE calculated the initial residential stock of 4-foot medium bipin T12 lamps using the lamps sold through the DIY distribution chain, which accounted for approximately 25 percent of NEMA's historical shipments. Next, DOE assumed 20 percent of those DIY sales went to small commercial consumers, with the remaining 80 percent apportioned to the residential sector. As a result, DOE assumed 20 percent of all 4-foot medium bipin shipments went to the residential sector and all of those were T12 lamps.

From those shipments, DOE calculated the residential installed stock and then modeled new construction, renovation, and fixture/ballast replacement in the same manner described in section 0. DOE assumed that in the base case, a portion of consumers will continue to purchase 4-foot T12 magnetic systems, while the remaining consumers will choose to purchase higher-efficacy 4-foot T8 and 4-foot T12 electronic systems. Overall, the number of 4-foot T12 systems installed in the residential sectors is relatively constant over the analysis period. For more details regarding DOE's assumptions in the residential sector, please see chapter 10 of the TSD.

e. GSFL Product Migration

DOE received many comments on its assumptions characterizing how consumers will migrate among different GSFL products. These comments were primarily focused on the movement away from T12 systems and the migration toward T5 systems, topics discussed in detail below.

i. Ballast Rule Effective Start Date

NEMA commented that the 2000 Ballast Rule does not ban T12 magnetic ballasts in the commercial sector until June 2010. This means these ballasts will be available through the end of 2010, and not 2009 as DOE's model had assumed, because some T12s will remain in the distribution chain for a period of months after the rule takes effect. Therefore, NEMA argued, DOE should expect T12 lamps to continue to be shipped beyond 2022, the year DOE projected the lamps will phase out. (NEMA, No. 22 at p. 25, 28) DOE agrees with NEMA that commercial sector magnetic ballasts will continue to be available through 2010 and has revised its model accordingly to better reflect the timing of the 2000 Ballast Rule's effective start date of amended standards. According to the revised model, DOE estimates that the majority of banned magnetic T12 ballasts will be eliminated from the installed stock by 2025. However, as discussed below, the inclusion of T12 electronic ballasts results in T12 lamps being shipped throughout the analysis period.

ii. Four-Foot Medium Bipin T12 Lamp Replacements

In the March 2008 ANOPR, DOE assumed that 100 percent of 4-foot T12 systems would be replaced by 4-foot T8 systems upon ballast failure. This assumption was made in consideration of the 2000 Ballast Rule, which effectively banned most 4-foot T12 medium bipin magnetic ballasts. 10 CFR part 430.32(m)(5) DOE received several comments related to this assumption and the implications for DOE's GSFL shipments analysis.

Stakeholders generally agreed that DOE's base-case assumption was too optimistic in terms of the migration from 4-foot T12 to 4-foot T8 systems. The comments provided two reasons why consumers would be expected to maintain T12 electronic ballasts and not migrate to T8 lamps. First, because the installed stock is dominated by T12 lamps, it is unlikely all consumers would switch to T8 lamps upon repurchase, especially when spot re-ballasting. Some commercial sector consumers would be expected to use another T12 lamp and ballast to maintain visual consistency with other lamps in a room. Second, the Joint Comment noted that residential low-power-factor ballasts are not subject to the 2000 Ballast Rule, meaning legal ballasts compatible with T12 lamps will continue to exist. 10 CFR part 430.32(m)(7)(iii). Similarly, Osram Sylvania made the same point and commented that 4-foot T12 medium bipin magnetic ballast systems are common in the residential sector. Osram Sylvania added that some fixtures include electronic ballasts and are marketed as being capable of operating T12 lamps, which could perpetuate T12 usage. NEMA added that cold temperature ballasts for 8-foot T12 RDC high output lamps are still allowed under the rule as well. (Public Meeting Transcript, No. 21 at pp. 248–251, 276, 281; NEMA, No. at pp. 25, 28; Joint Comment, No. 23 at p. 7)

The stakeholders did differ slightly on the appropriate replacement rates that DOE should assume. The Joint Comment recommended DOE assume 5 to 10 percent of the commercial market and a higher proportion of the residential market will purchase T12 lamp and ballast systems upon ballast failure, with the remainder migrating to T8 systems. (Joint Comment, No. 23 at p. 7) GE estimated that about 20 percent of the currently installed base of T12 lamps will be replaced by T12 lamps, while the other 80 percent will migrate to T8 lamps. (Public Meeting Transcript, No. 21 at pp. 250–252) NEMA suggested that DOE should assume that in 2022, T12 lamps will compose at least 10 percent of the 4-foot lamp market, 40 percent of the 8-foot single pin slimline market, and over 90 percent of the RDC HO market. (NEMA, No. 22 at p. 28)

After careful consideration of these comments, DOE has decided to modify its assumption regarding the rate of migration from T12 to T8 lamps. Accordingly, DOE is using NEMA's estimates to recalibrate its shipment forecasts. DOE now agrees that not all 4-foot T12 lamps would be replaced by T8 systems upon ballast failure. Thus, for this NOPR, DOE assumed 90 percent (down from 100 percent) of 4-foot T12 systems will be replaced with T8 systems and 10 percent with T12 systems. According to DOE's estimates in 2022, T12 lamps will comprise nearly 20 percent of the 4-foot medium bipin market, 25 percent of the 8-foot single pin slimline market, and 93 percent of the 8-foot recessed double contact HO market. (See TSD chapter 10.) DOE notes that these estimates do not exactly

align with NEMA's suggestions, because they incorporate several other phenomena in addition to the migration to T12 electronic systems (*e.g.*, growth rate, emerging technologies, T5 penetration, 8-foot SP slimline to 4-foot MBP conversions).

iii. Eight-Foot Single Pin Slimline T12 Lamp Replacements

For its shipments forecasts in the March 2008 ANOPR, DOE assumed that 90 percent of the 8-foot T12 single pin systems would be replaced with two 4-foot T8 systems, and 10 percent would be replaced by 8-foot single pin T8 systems. In its written comments, NEMA generally agreed with DOE's assumption but provided slightly different replacement rate: NEMA suggested that DOE should assume 80 percent of the 8-foot T12 single pin lamps would be replaced by two 4-foot T8 lamps and 20 percent by 8-foot T8 lamps. (NEMA, No. 22 at p. 28) ACEEE and the Joint Comment argued that DOE's assumption that 90 percent of the 8-foot market would switch to 4-foot lamps is much too high, particularly because the current stock is dominated by T12. The Joint Comment also stated that DOE should include some electronic T12 system ballast purchases, as in the case of 4-foot T12 lamps. (Public Meeting Transcript, No. 21 at pp. 254–255; Joint Comment, No. 23 at p. 7)

Based on its consideration of the above comments, DOE revised its estimated conversion rates for 8-foot single pin slimline systems in this NOPR. In line with the Joint Comment and NEMA's recommendations, DOE lowered its conversion rates to 4-foot MBP systems. In addition, consistent with NEMA's suggestion, DOE has included a conversion to electronic 8-foot T12 SP slimline systems. DOE now assumes 80 percent of the 8-foot T12 single pin lamps would be replaced by two 4-foot MBP T8 systems, with the remaining 20 percent split evenly between 8-foot T8 and electronic 8-foot T12 SP slimline systems.

iv. Four-Foot T5 Lamps

In the March 2008 ANOPR, DOE did not analyze 4-foot miniature bipin T5 standard output (SO) and high output (HO) lamps as covered product classes. As discussed in section A.1.b above, for this NOPR, DOE is proposing to cover both T5 SO and T5 HO lamps as additional, distinct product classes. The following describes the methodology DOE used to generate shipments of these lamps.

To establish the 2005 installed stock of T5 lamps, DOE first estimated 2001-to-2005 shipments based on assumptions derived from its market research and supported by manufacturer interviews. Market literature indicated that T5 lamps represented 2 percent of the 2004 GSFL market, a figure DOE assumed for its analysis. DOE's research also indicated that the combined market share of T5 SO and HO lamps was growing as a percentage of the overall GSFL market. Additionally, in interviews, manufacturers provided insight on the proportions of T5 lamp sales that are standard output and high output. Using these assumptions, DOE generated historical shipment estimates for 2001 to 2005, which it used to calculate the initial stock of SO and HO lamps in the same manner it does for all other GSFL product classes. Finally, DOE received confidential aggregated (both SO and HO) T5 lamp shipment data from NEMA for 2001 to 2007. DOE used this data to validate its installed stock estimates.

In general, after establishing the 2005 T5 SO and HO installed stocks, DOE modeled shipment growth based on a migration from other product classes. For T5 SO lamps specifically, DOE's research indicated that shipment growth of these lamps is primarily driven by a migration from the 4-foot MBP market. In addition, because 4-foot T5 MiniBP SO systems require a different fixture than 4-foot MBP systems, T5 systems would be unlikely to penetrate the ballast-only replacement market. Therefore, to establish T5 standard output shipments, DOE allotted a portion of the 4-foot MBP fixture replacement, renovation, and new construction markets to 4-foot T5 MiniBP systems. To do this, DOE first calculated the size of this potential market for new T5 SO systems in each year. DOE then determined the portion of this market that would actually be serviced by T5 SO lamps by calculating the share that resulted in T5 shipments consistent with 2006 and 2007 historical data. DOE held the resulting percentage (approximately 12.5 percent) constant throughout the analysis period. As a result of the inclusion of 4-foot T5 MiniBP lamps eroding part of the 4-foot MBP market, estimates of total 4-foot MBP lamp shipments are lower in the NOPR than in the ANOPR. Using this methodology, in the base case Emerging Technologies scenario, DOE forecasts T5 SO shipments of 15.0 million in 2008, 24.2 million in 2012, and 47.4 million in 2025 (56.2 million in 2025 in the base-case Existing Technologies scenario).[53]

For T5 HO lamps, after establishing the installed stock in 2005 in the same manner as with T5 SO lamps, DOE developed 4-foot T5 MiniBP HO lamp shipments by modeling a migration from two different lighting markets. Marketing literature indicated, similar to 8-foot RDC HO systems, a large portion of 4-foot MiniBP T5 HO systems serve high-bay (ceilings higher than 20-feet high) applications due to their highly-concentrated light output. Historical shipment data for 8-foot RDC HO lamps showed substantial declines in 2006 and 2007, indicating T5 HO lamps may be rapidly displacing them. In addition, DOE's research indicated that a significant portion of 4-foot T5 HO growth can be attributed to a penetration into the high intensity discharge (HID) lamp high-bay and low-bay markets. Therefore, to calculate the growth in 4-foot MiniBP T5 HO lamp shipments, DOE assumed that these systems were penetrating both the 8-foot RDC HO and HID markets. Similar to its analysis for T5 SO systems, DOE established that the fixture replacement, renovation, and new construction market segments represent the available market for T5 HO systems. DOE obtained HID shipment data from the 2004 HID determination,[54] from which DOE calculated the total lumens servicing low-bay and high-bay applications. Then, consistent with historical T5 and 8-foot RDC HO shipments, DOE assumed T5 HO would fully penetrate the 8-foot RDC HO new construction, renovation, and fixture replacement markets, as well as the HID new construction and renovation market. Using this methodology, DOE forecasts T5 HO shipments of 14.0 million in 2008, 23.6 million in 2012, and 46.1 million in 2025.

For further details on shipment forecasts of 4-foot T5 lamps, see chapter 10 of the TSD. DOE seeks public comment on its analysis of the 4-foot T5 SO and HO markets, as well as its shipment results.

[53] As discussed earlier, DOE models two base-case shipment scenarios: Existing Technologies and Emerging Technologies. Because the Emerging Technologies scenario models the potential substitution of GSFL systems with lamps that incorporate emerging technologies (such as LED), the Emerging Technologies scenario generally results in fewer shipments of GSFL. However, based on price and technology advancement projections, DOE estimated that these emerging technologies will not likely significantly penetrate the GSFL market until after 2012.

[54] U.S. Department of Energy, Office of Energy Efficiency and Renewable Energy, ''Energy Conservation Program for Commercial and Industrial Equipment: High-Intensity Discharge Lamps Analysis of Potential Energy Savings'' (Dec. 2004). Available at: *http://www1.eere.energy.gov/buildings/appliance_standards/commercial/pdfs/hid_energy_savings_report.pdf.*

3. Base-Case Market-Share Matrices

DOE's market-share matrices are another important input into the shipments analysis and NIA. Within each product class, DOE considers the mix of technologies from which consumers can choose. These choices are represented in market-share matrices, which apportion market share for lamp stocks (in 2012) or lamp shipments (after 2012). Because shipments depend on lamp lifetime and system lumen output assumptions, among other inputs, DOE allocated market shares to each of the lamp technologies for the base case and standards case. The matrices enable the shipment model to capture a migration to different lamps, or, for GSFL, lamp-and-ballast designs, over time in both the base and standards cases. Issues related to these market-share matrices are discussed below.

a. General Service Fluorescent Lamps

A ballast factor measures the actual lumen output of a lamp-and-ballast system relative to a reference system. A lower ballast factor will, all else equal, lead to lower lumen output, and proportionally less energy consumption than the reference system. ACEEE commented that the ballast factor of 0.75 that DOE used in the market matrices is fairly uncommon and that manufacturers are now marketing lower ballast factors, including 0.7, 0.69, and 0.68. Therefore, ACEEE expects a bigger jump from normal to low ballast factor than the 0.78–0.75 jump that DOE assumes in its market-share matrices presented in the ANOPR. The Joint Comment noted that 0.71 represents the mid-point of very low ballast factors on the market. (Public Meeting Transcript, No. 21 at pp. 262–263; Joint Comment, No. 21 at p. 10) Consistent with changes incorporated in the engineering analysis, DOE incorporated a 0.71 ballast factor ballast option in the NIA. In sum, DOE attempts to match as closely as possible the lumen output of the retiring system and the replacement system. To the extent that a lower ballast factor can achieve the appropriate lumen output, it is incorporated into the technology choices facing consumers.

Regarding the base-case 4-foot T8 medium bipin market-share matrix, Industrial Ecology commented that DOE was incorrect to assume 0 percent market share for the 25W lamp in 2012. Because thousands of these lamps are being sold in 2008, that estimate should be much greater than zero. (Public Meeting Transcript, No. 21 at p. 261) The Joint Comment stated that 30W lamps are being displaced by 25W and 28W options. Therefore, DOE's 30W market share assumptions—4 percent in 2012 and 15 percent in 2042—are too large. The Joint Comment suggested that DOE should substantially reduce the market share of 30W lamps and split those sales between 25W and 28W lamps. (Joint Comment, No. 23 at p. 10)

NEMA commented on the same market-share matrix, stating that the market share for T8 lamps in the 2042 base case should be less than 30 percent for 32W lamps and greater than 30 percent for 25W lamps, with the rest of the market composed of 28W and 30W lamps. (NEMA, No. 22 at p. 28)

DOE considered the submitted comments and modified its base-case 4-foot T8 medium bipin market-share matrix accordingly. Based on a confidential NEMA survey of market shares of 4-foot medium bipin lamps, in 2012, DOE allocated 4 percent, 4 percent, and 2 percent of the 4-foot T8 market share to 25W, 28W, and 30W lamps, respectively, for the revised NOPR base-case market-share matrices. In 2042, DOE allocated 32 percent, 27 percent, and 14 percent market to 25W, 28W, and 30W lamps, respectively. See chapter 10 of the NOPR TSD for the full market-share matrices in 2012 and 2042.

b. Incandescent Reflector Lamps

In the March 2008 ANOPR, DOE presented market-share matrices for both residential and commercial IRL. For the commercial sector, the base-case IRL market-share matrix apportioned market share of the stock to only halogen and the standard HIR (currently EL2) lamps. Although DOE received no comments from stakeholders, DOE modified these matrices for the NOPR to reflect changes made in the engineering analysis. For the NOPR, the base case market-share matrix for commercial IRL now allocates market share to all currently commercially-available lamp technologies, including improved halogen, long-life HIR, and the silverized reflector technology. DOE believes this revised distribution better reflects product availability and consumer purchasing trends because they include all covered lamp technologies currently being sold.

4. GSFL Standards-Case Shipment Scenarios and Forecasts

In the March 2008 ANOPR, DOE modified its base-case market-share matrices to account for two standards-case scenarios and to generate shipment forecasts. DOE considered a Roll-up scenario and a Shift scenario, described below. DOE also introduced voluntary standards-induced retrofits in the standards case. DOE received several comments on the scenarios it analyzed and its rate of voluntary retrofits. In response to those and related comments, DOE is modifying its Shift and Roll-up scenarios and introducing new standards-case scenarios. These scenarios are discussed in detail below and in TSD chapter 10.

a. Shift/Roll-Up Scenarios

In the March 2008 ANOPR, DOE modeled lower-bound and upper-bound energy conservation scenarios for the GSFL standards-case NIA to characterize the range of energy savings that may result from standards. 73 FR 13620, 13671 (March 13, 2008). In the standards-case NIA for GSFL and commercial IRL, DOE first modeled a lower-bound energy conservation scenario called the Roll-up scenario. 73 FR 13620, 13671 (March 13, 2008). This scenario assumes that consumers owning lamps or systems that do not meet the new standards will ''roll up'' to the lowest first-cost option available (preserving lumen output if possible) when purchasing standards-compliant lamps. (March 2008 ANOPR TSD chapter 9) The Roll-up scenario also assumes that consumers already owning standards-compliant lamps or systems will continue to purchase those lamps or systems.

DOE also modeled a Shift scenario in the March 2008 ANOPR for the GSFL NIA, in which DOE assumed that consumers are driven by both lamps cost and energy savings. In this case, consumers may purchase a variety of lamps or systems that are more efficacious than their base case systems. (73 FR 13620, 13671 (March 13, 2008); March 2008 ANOPR TSD chapter 9) Specifically, consumers who purchase products in the base case at above-minimum standard levels will ''shift up'' to even higher efficacy standard levels in the Shift scenario. DOE used this scenario to illustrate upper-bound energy savings.

The Joint Comment argued that both the Roll-up and Shift scenarios understate standards-case energy savings, but the Roll-up scenario is more unrealistic because standards change the relative economics of more-efficient products. (Joint Comment, No. 23 at p. 11) In other words, standards would eliminate the least-efficacious lamps (which usually have the lowest first costs), thereby reducing the cost premium of high-efficacy lamps relative to the lowest first-cost available lamp. According to the commenter, that would encourage some consumers to purchase lamps above the standards. The Joint Comment also argued that new

standards would encourage manufacturers to promote more efficacious products, a market dynamic not sufficiently captured by either scenario. (Joint Comment, No. 23 at p. 11)

The Joint Comment further stated that the Shift scenario reflects a more realistic consumer response to standards than the Roll-up scenario. Historically, for example, some consumers have purchased systems that are more efficacious than minimum standards. Still, the Joint Comment argued, the Shift scenario does not fully capture the spread of efficiencies in a standards-compliant market and fails to characterize manufacturer efforts to hasten development of more-efficient lamps and systems. The Joint Comment argued that DOE's scenarios should anticipate voluntary programs and manufacturer interest in establishing more-efficient product lines in the standards case. (Joint Comment, No. 23 at pp. 11, 22)

Regarding the comment about the relative economics of lamp purchases, DOE agrees that the relative first-costs change in the standards case (*i.e.*, the up-front cost differential between the least-cost, standards-compliant lamp and a more-efficient lamp) is less than in the base case. This effect is one of the reasons DOE models a Shift scenario. Still, DOE does not believe that this effect implies that the Shift scenario is necessarily more viable than the Roll-up scenario. Although the relative up-front economics change between cost and efficacy, they may not change between cost and income, meaning some consumers—particularly those not concerned about energy savings—may focus on the absolute costs at the time of purchase. A consumer's lighting budget, for example, will not necessarily increase simply because there is a smaller cost premium for a more-efficacious lamp. In sum, DOE cannot be certain which scenario is more likely, and, thus, continues to model both scenarios.

However, DOE agrees that revisions to the Shift scenario may better capture the spread of efficiencies in the market. Therefore, DOE revised its Shift scenario for the NOPR to more closely retain the existing (baseline) efficacy distribution in the standards case. (See TSD chapter 11 for the revised Shift scenario efficacy distribution results.) However, as the standard becomes more stringent, DOE has maintained its approach of incrementally accumulating market share of the lamp stock at TSL5 and not projecting some to move beyond what now characterizes the maximum technologically feasible standard level (''max-tech''). It is not possible for DOE to model a spread of efficiencies above max-tech levels. DOE has interviewed manufacturers and concluded it cannot reasonably predict future price and performance points of technologies yet to be developed for the market. DOE seeks comment and supporting data on whether the Roll-up or Shift scenario is more appropriate.

b. Lighting Expertise Scenarios

In its written comments, NEMA stated that it considers the Shift scenario implausible because the scenario assumes consumers will ''aggressively'' migrate to lower-ballast-factor ballasts. NEMA strongly disagreed with DOE's assumption that more-stringent efficacy standards are significantly correlated with lower GSFL ballast factors (particularly at CSLs 3, 4, and 5), and NEMA argued that it had seen no direct and demonstrated causal relationship between them in its experience. Further, NEMA argued that there is no proven correlation between new potential GSFL standards and the future mix of ballast factor values that will occur; therefore, NEMA reasoned that DOE should not apply such a correlation in its standards-case market-share matrices. NEMA also commented that new standards-compliant GSFL and their ballasts would have to be interoperable across manufacturers and with a wide range of existing ballasts and luminaires. Therefore, more-stringent efficacy standards would mostly yield greater lumen output, rather than decreasing lamp wattage. As such, NEMA argued, DOE has overreached in building a case for standards set at higher efficacy levels by inappropriately and arbitrarily assuming a strong correlation between increasing efficacy and decreasing ballast factor views. (NEMA, No. 22 at p. 26, 27)

NEMA also commented that the most direct way to use the efficacy improvements imposed by the standards is to use fewer luminaires to attain the same delivered light level on the work surface while reducing the total wattage. However, NEMA maintains that this is not a practical possibility because, even for new construction or major renovation projects, the spacing of luminaires is dictated by a building and ceiling system grid. Thus, there is no opportunity to take advantage of additional lumens that might result from standards by re-spacing existing luminaires, which must continue to operate on high-volume ballast designs. (NEMA, No. 22 at p. 26) Based on these arguments, NEMA strongly asserted that moving beyond CSL1 and CSL2 for a lamp-only rulemaking is ill-advised. (NEMA, No. 22 at p. 26, 27)

DOE has carefully considered NEMA's comments on DOE's assumption of a general trend toward lower-BF ballasts over the analysis period. In response, DOE undertook an extensive literature review and analysis—discussed below—to better characterize the likelihood of consumers migrating to lower-BF ballast systems if higher efficacy standards are required. DOE assessed the lighting expertise of groups of consumers, described below, who make lighting purchase decisions. DOE assumes that consumers with ''high'' lighting expertise will be sufficiently educated about ballast factors and lamp efficacy to migrate to lower-ballast-factor ballasts when lower wattage lamps are not available in the standards case. That is, these consumers will seek to maintain light output in the replacement purchase.

To analyze this issue, DOE first characterized the lighting market supply chain in the commercial and residential sectors and identified the decision makers within each one (*e.g.*, contractors, homeowners). DOE broke down each sector by the principal events that prompt lamp purchases: (1) Ballast failure; (2) retrofit; (3) fixture replacement; (4) renovation; and (5) new construction. DOE assigned probabilities reflecting each decision maker's likelihood of making the lighting purchase decision given the purchase event. For example, in purchase events driven by new construction, DOE assumed lighting designers, architects, and electrical engineers make 70 percent of the decisions, owners make 20 percent, and electrical contractors make the remaining 10 percent. DOE then analyzed the likelihood of each decision maker choosing to run a lamp on a lower BF ballast if forced by standards to purchase a more-efficacious lamp. DOE described that likelihood with a probability that was based on the technical expertise and motivation of the decision maker. Within each purchase event, DOE multiplied the likelihood of each market actor making the decision by the likelihood of that actor choosing a lower-BF ballast. In this way, DOE derived an estimate for the likelihood of a lower-BF ballast being selected for each event in each sector in the standards case.

DOE assumed the commercial and industrial sectors behave similarly with respect to ballast factor choices, and no distinction was made between them in this analysis. Additionally, decision makers in the large-commercial sector can be different agents making different

decisions than those in the small-commercial sector. In the market segments (purchase events) where DOE found consumer behavior to be substantially different between these subsectors, DOE weighted the relative impact of each subsector when characterizing the overall commercial market. Table V.6 presents the results of DOE's analysis for the commercial and residential sectors. The values depict the probability that lamps purchased in each event will be matched with lower-ballast-factor ballasts, if necessary, to maintain lumen output. For example, 78 percent of lamps purchased in new construction in the commercial sector will be paired with lower-ballast-factor ballasts, if no reduced-wattage lamps are available in the standards case,

TABLE V.6—MARKET SEGMENT-BASED LIKELIHOOD OF HIGH LIGHTING EXPERTISE

Lamp purchase event	Probability	
	Commercial (in percent)	Residential (in percent)
Renovation	69	48
New Construction	78	61
Retrofit	92	0
Ballast Replacement	8	0
Fixture Replacement	34	0

In light of NEMA's comments and DOE's analysis, DOE used these results to add a second set of standards-case scenarios to characterize ballast factor migration in the GSFL NIA. DOE now also analyzes a High Lighting Expertise scenario and a Market Segment-Based Lighting Expertise scenario. These scenarios characterize consumers' decisions (or lack thereof) when purchasing a more-efficient lamp to either maintain previous lumen output or accept higher lighting levels. For its part, the High Lighting Expertise scenario uses the same methodology as DOE used in the ANOPR. The High Lighting Expertise scenario generally characterizes more sophisticated lighting decisions in which consistent lighting levels and/or energy savings play a determining role in consumer behavior. In this scenario, consumers are more likely to choose a lower-ballast-factor ballast to pair with higher-efficacy lamps. Conversely, in the Market Segment-Based scenario, DOE assumed consumers often accept higher lighting levels as a consequence of higher-efficacy lamps. As a consequence, these consumers do not achieve the same energy savings as would be possible by migrating to lower-ballast-factor ballasts. DOE used this analysis, and the results shown in Table V.6, to characterize the Market Segment-Based expertise scenario. On the other hand, in the High Lighting Expertise scenario, DOE assumes all consumers (100 percent) migrate to lower-ballast-factor ballasts when appropriate. Please see TSD appendix 10B for more details.

c. Voluntary Retrofits

In the March 2008 ANOPR, DOE assumed that more-stringent efficacy standards would lead to higher T12 lamp prices, and, in turn, higher rates of voluntary retrofits from T12 to more-efficacious T8 lamps. For example, DOE assumed that CSL1 would drive an additional 10 percent of the T12 market to voluntarily migrate to T8 lamps, that CSL2 would drive an additional 20 percent, that CSL3 would drive an additional 30 percent, and so on. These commercial standards-induced retrofits involve consumers voluntarily discarding their functioning T12 ballasts, and purchasing new T8 ballasts in the standards case. In contrast, in the base case, these consumers would have utilized the entirety of their T12 ballast lifetime.

At the public meeting, ACEEE agreed with DOE's assumption that standards will accelerate voluntary retrofits, but argued that DOE's retrofit rate was too aggressive. ACEEE specifically stated that the 50-percent retrofit rate per year at CSL5 was too high and suggested a rate of roughly half that level. (Public Meeting Transcript, No. 21 at p. 282) GE agreed that DOE's retrofit rates were too high, suggesting that 10 percent at CSL1 is an appropriate starting point, but 25 percent should probably be the maximum assumed retrofit rate at CSL5. Using those rates as the minimum and maximum, GE said DOE could scale the rate for the other CSLs. (Public Meeting Transcript, No. 21 at pp. 282–283) In its written comments, NEMA similarly stated that DOE's conversion rate for consumers voluntarily retrofitting from T12 to T8 systems is likely overstated. NEMA suggested that DOE should use a voluntary retrofit rate of 20 to 25 percent for CSL5 and recommended that other rates be adjusted based on that percentage. (NEMA, No. 22 at p. 28)

At the public meeting, Philips also commented that it would expect utilities to be more aggressive with their rebate programs in the standards case than they would be in the base case. PG&E stated that voluntary retrofits are driven by many factors, including attention to global climate change, increased product availability, and other factors, not necessarily utility rebate programs. (Public Meeting Transcript, No. 21 at pp. 273–275)

DOE considered these comments and maintains that these standards-induced retrofits are a likely phenomenon and important to model in the NIA. DOE agrees that its initial retrofit assumptions were likely too high, particularly for the higher efficacy levels. For the NOPR, consistent with comments received, in the commercial sector DOE continued to assume that EL1 would drive an additional 10 percent of the T12 market per year to voluntary retrofit to T8 lamps. DOE also assumed a 25-percent retrofit rate at EL4 and EL5, levels at which all T12 lamps are effectively eliminated from the market. For TSL1, TSL2, and TSL3, DOE changed the standards-induced retrofit rates to 10 percent, 15 percent, and 20 percent, respectively.

Similar to DOE's approach in the commercial sector, DOE also included increased migration of residential consumers from 4-foot medium bipin T12 systems to T8 systems. As discussed in chapter 10 of TSD, DOE assumed in the base case that residential consumers replacing their T12 fixture (either due to fixture failure or ballast failure) would purchase another T12 system. In contrast, in the commercial sector, DOE assumes 90 percent of 4-foot MBP consumer replace their T12 ballasts with T8 ballast upon fixture or ballast failure in the base case. In addition, while in the commercial sector DOE assumed, under amended energy conservation standards, some consumers would retrofit their working T12 ballast systems before end of ballast life, DOE assumed residential

consumers never do so. Instead, in the residential sector, DOE incorporated an additional migration to T8 lamps only when the consumer is confronted with a ballast or fixture failure. In such situations DOE assumed that a certain percentage residential consumers, who in the base case would purchase a new T12 system, would instead, in the standards case, elect to purchase a T8 system—despite the availability of T12 options. Specifically, based on manufacturer interviews, DOE shifts 25 percent, 35 percent, and 65 percent of these consumers to T8 systems at TSL1, TSL2, and TSL3, respectively (thereby reflecting increased cost of T12 lamps). At TSL4 and TSL5, all residential consumers migrate to T8 systems because T12 lamps would be effectively eliminated from the market.

5. IRL—Standards-Case Shipment Scenarios and Forecasts

In the March 2008 ANOPR, DOE modified its market-share matrices to account for standards-case scenarios and generate shipment forecasts for IRL. DOE created one main shipment scenario and two sensitivity scenarios to characterize how IRL consumers would be expected to react to standards in the commercial and residential sectors. The sensitivity scenarios were called the ''65W BR Lamp Substitution'' scenario and the ''10-Percent Lumen Increase'' scenario. For all three standards-case scenarios in these sectors, DOE assumed that consumers whose base-case lamp purchase has an efficacy lower than that of the standard would roll up to the least efficacious lamp design available. Any IRL consumer whose base-case lamp purchase meets the efficacy standard would remain unaffected.

In the main shipment scenario, DOE made two assumptions: (1) Consumers who purchase covered IRL technology in the base case continue to purchase covered IRL technology in the standards case (*i.e.*, the total number of installed covered IRL in the base case is the same as that in the standards case throughout the analysis period); and (2) in the standards case, consumers purchase higher-efficacy lamp designs with equivalent lumen output as their base-case lamps.

The remaining sensitivity scenarios modeled two situations—one in which consumers may migrate from regulated IRL toward the exempt 65W BR lamps in the standards case (termed ''65 Watt BR lamp substitution''), and another in which a portion of residential consumers of IRL buy a more-efficacious lamp at the same wattage as in the base case (termed ''10-percent lumen increase''). This sensitivity scenario assumed consumers would, on average, purchase 10 percent more lumens in the standards case. As explained below, DOE received several comments on the March 2008 ANOPR standards-case IRL shipments. In response to those and related comments, DOE is modifying and introducing new standards-case scenarios, discussed in detail below and in TSD chapter 10.

i. Shift/Roll-Up Scenarios

For commercial sector IRL, DOE chose to model a Roll-up scenario in the March 2008 ANOPR. The Joint Comment encouraged DOE to also model a Shift scenario for commercial IRL because of the variety of existing and emerging efficiency options available. The Joint Comment argued a Shift scenario would better capture both the improved cost competitiveness of higher-efficacy options and greater manufacturer investment in developing higher-efficacy products. (Joint Comment, No. 23 at p. 18)

DOE agrees that some commercial consumers may continue to purchase products above the minimum standard level. Therefore, similar to the Shift scenario in GSFL, DOE created a Shift scenario for IRL that captures the same spread of efficiencies in the standards case as in the base case. To model this, DOE compiled a distribution of IRL in the commercial sector with different efficacies using the revised efficacy standard levels for this notice. Based on this distribution, DOE then created a Shift scenario for the NOPR IRL national impact analysis.

In the March 2008 ANOPR, DOE's residential standards-case market-share matrix assumed that the entire residential market purchases the least-cost standards-compliant lamp at each efficacy level. Because all residential consumers purchase baseline lamps, the Shift and Roll-up scenarios lead to equivalent results. For example, at CSL1, DOE assumed the entire residential market would choose improved halogen lamps; at CSL3, the market would choose improved HIR.

NEMA commented that residential consumers do not necessarily purchase lamps that meet only one efficacy level. (NEMA, No. 22 at p. 31) NEMA contended that consumers could opt to buy lamps that meet a higher CSL than the one imposed by DOE.

Based on NEMA's comment, DOE reconsidered its assumption that consumers in the residential market purchase lamps at only the lowest efficacy level. However, DOE believes that its assumption that consumers buy lamps at the lowest first-cost standards-compliant efficacy level correctly characterizes residential consumer behavior in general. For example, although lamps using HIR technology are available today, consumers generally do not buy them because of their high initial cost. DOE does not believe current market behavior will radically change under new or amended standards. Without data suggesting otherwise, DOE believes the most appropriate forecasting assumption should generally reflect the predominant, current consumer behavior. Therefore, DOE maintains its assumption for the NOPR that residential consumers would continue to purchase the lowest-first-cost, standards-compliant lamps. For further detail regarding the Shift and Roll-up scenarios, see chapter 10 of the TSD.

ii. Product-Substitution Scenarios

At the public meeting, ACEEE commented that the deployment of non-IRL emerging technologies will be affected by the efficacy level that DOE selects for this rule. (Public Meeting Transcript, No. 21 at p. 291) While DOE considered the comment, it ultimately did not model additional movement to LED or CMH lamps in response to standards because the efficacy and price projections for such lamps have a significant degree of uncertainty. DOE does not wish to incorporate that level of conjecture into the NPV calculation for this rule.

However, because DOE assumed R–CFL technology was mature, DOE did assess additional movement from IRL to R–CFL in response to standards. For the residential sector, DOE calculated simple payback periods comparing R–CFL to the baseline halogen and R–CFL to the higher-efficacy lamp designs. Using incremental market penetrations based on the payback period calculations, DOE incorporated additional movement to R–CFL in the residential sector standards case. In the commercial sector, DOE assumed that all institutions wishing to convert to R–CFL, despite its shortcomings (such as lower color quality), do so before 2012. Therefore, there is no additional movement to R–CFL in response to standards.

DOE excluded certain IRL (particularly some BR and ER lamps, such as 65W BR30 and ER40 lamps) from the base-case NIA in the March 2008 ANOPR because these IRL were exempted from standards by EISA 2007. (EISA 2007 section 322(b); 42 U.S.C. 6295(i)(1)(C)) In the standards-case sensitivity scenario, DOE modeled the movements to exempted IRL as a reduction in the market size of covered IRL as consumers move from covered to

non-covered lamps. DOE received a number of comments on its choice to exclude exempted IRL from the base case and standards case in the NIA.

Several comments recommended that DOE should model movements to exempt IRL in the main base-case and standards-case NIA scenarios instead of only modeling such movements in a sensitivity scenario. ACEEE commented that DOE needs to account for BR lamps in its analysis; by excluding BR lamps from the base case, ACEEE argued DOE was essentially ignoring their presence in the market. The Joint Comment argues that 65W BR lamps should be included in the base case because they represent a potential loophole to standards. (Public Meeting Transcript, No. 21 at pp. 293–294, 313–314; Joint Comment, No. 23 at p. 17)

As stated above, DOE only includes products being regulated in this rulemaking in the base-case shipment forecasts. Since this rulemaking does not cover 65W BR lamps, DOE cannot include them in the base-case NIA. Accordingly, DOE removed exempted IRL from the shipment data used as inputs to the base-case NIA in the ANOPR. (March 2008 ANOPR TSD chapter 9) For the standards-case NIA, DOE created a ''65 Watt BR lamp substitution'' sensitivity scenario to model movements to exempted 65W BR lamps due to the various CSLs. (March 2008 ANOPR TSD appendix 9A) DOE included 65W BR lamps in the standards case because covered products shift to this lamp.

DOE received a number of comments on how it modeled the shift to BR lamps in the standards case. NEMA stressed its significance and agreed that consumers will shift from covered to exempted BR lamps, with the shift increasing as more-stringent standards raise product costs. (NEMA, No. 22 at p. 27) The Joint Comment maintained that 65W BR lamps should be included in the standards case. (Joint Comment, No. 23 at p. 17) However, some attendees of the public meeting suggested that the shift to the 65W BR might be inappropriate because they believed that consumers already purchase exempted BR lamps in most applications where consumers have the option of installing either the exempted BR lamps or higher-efficacy PAR lamps. For example, PG&E commented that the vast majority of IRL in recessed cans are already exempted BR lamps, so it is unlikely that consumers will switch from existing PAR lamps (which are included in coverage) to new BR lamps in those applications. In addition, Industrial Ecology stated that some household recessed can fixtures are not strong enough to hold PAR lamps, which are heavier than BR lamps. Thus, BR lamps would likely maintain their indoor recessed can market share relative to PAR lamps. Regarding outdoor applications in which PAR lamps are often used, Industrial Ecology also commented that BR lamps are generally incompatible with these application, meaning consumers would likely not migrate from PAR lamps to exempted BR lamps for outdoor applications in response to standards. (Public Meeting Transcript, No. 21 at pp. 319, 321)

DOE considered these comments, and agrees that PAR lamps may be more suitable for outdoor applications than the exempted BR lamps. However, based on residential estimates that 40 percent of all residential IRL are PAR lamps,[55] DOE believes that a considerable portion of residential PAR lamps are used in non-outdoor applications which are compatible with both PAR and the exempted BR lamps. Thus, DOE maintains that some residential consumers would likely move to exempted IRL under standards. For the NOPR, DOE revised its estimates of the number of consumers that will shift to exempted IRL by calculating incremental market penetrations for each standard level.

To better account for migration to exempted lamps, DOE has decided to analyze a second set of standards-case scenarios for IRL in this NOPR. DOE now analyzes scenarios called the Product Substitution and No Product Substitution scenarios. The Product Substitution scenario models a shift to both exempted BR lamps and to R–CFL in the standards case. The No Product Substitution scenario does not model any additional shift in the standards case to non-regulated reflector technologies. For more information about the product substitution standards case scenario, see chapter 10 of the TSD.

DOE maintains the 10-percent lumen increase sensitivity scenario from the ANOPR, a scenario in which a portion of consumers purchase the same wattage higher efficacy lamp in the standards case and do not save energy. See appendix 11A for more detail on this sensitivity scenario.

6. Other Inputs

a. Analysis Period

In its written comments, NEMA stated that any market forecast, even over a short period of time, will contain errors. NEMA argued that forecasting market relationships over 30 years will compound any inherent errors to the point where the estimate may no longer be useful. For example, NEMA argued that overstating growth of lamps covered by this standard would overstate the discounted value of potential benefits associated with amended standards. (NEMA, No. 22 at p. 24) DOE recognizes that forecasting over long periods of time can lead to inaccuracies. However, due to the long lifetime of ballasts and lamps in some sectors, the stock of these products can take decades to turn over. Thus, DOE believes the standards impact on energy consumption and energy savings is best quantified and evaluated over a long period of time. Therefore, DOE has decided to maintain an analysis period from 2012 to 2042, consistent with the shipment and national impact analyses of other rulemakings. However, to account for the uncertainties involved in forecasting energy savings and NPV in general, and over long periods of time, DOE has created several base-case and standards-case scenarios. Based on these scenarios, previously discussed in sections V.E.2.c, V.E.4, and V.E.5, DOE believes that it can characterize the NIA results for these products with a sufficient degree of certainty.

b. Total Installed Cost

The total annual installed cost increase is equal to the annual change in the per-unit total installed cost (*i.e.*, the difference between base case and standards case) multiplied by the shipments forecasted in the standards case.

On this topic, GE commented that the cost of migrating from an 8-foot lamp to a 4-foot lamp includes not only the lamp and ballast costs, but also the cost of the retrofit kit and labor, which was not included in DOE's ANOPR NIA. NEMA commented that the retrofits kits would cost $45–$50, not including labor, which would take 20–25 minutes. (NEMA, No. 22 at p. 28; Public Meeting Transcript, No. 21 at pp. 255–256) DOE agrees that the retrofit kit costs should be included in the NIA. Therefore, DOE is including in the NIA the retrofit kit cost of $50 per 8-foot single pin lamp that is replaced by two 4-foot lamps. DOE is also including a total installation time of 25 minutes. See TSD chapter 11 for further detail on retrofit kit costs.

c. Electricity Price Forecast

In the March 2008 ANOPR, DOE projected electricity prices using EIA's *AEO2007* estimates and extrapolated prices beyond 2030. In this notice, DOE

[55] New York State Energy Research and Development Authority, Incandescent Reflector Lamps Study of Proposed Energy Efficiency Standards for New York State (2006). Available at: *http://www.nyserda.org/publications/Report%2006-07-Complete%20report-web.pdf* (Last accessed Oct. 7, 2006).

updated those projections based upon *AEO2008*. DOE received a comment on using electricity price forecasts other than those of *AEO* as sensitivities. See section 0 above for more detail on this comment and DOE's response.

d. Energy Site-to-Source Conversion

The site-to-source conversion factor is the multiplicative factor DOE uses for converting site energy consumption into primary or source energy consumption. In the March 2008 ANOPR, DOE used EIA's *AEO2007* forecasts (to 2030) of electricity generation and electricity-related losses. DOE extrapolated conversion factors beyond 2030. In this notice, however, DOE uses annual site-to-source conversion factors based on the version of the National Energy Modeling System (NEMS) that corresponds to *AEO2008*. The conversion factors vary over time because of projected changes in the Nation's portfolio of generation sources. DOE estimated that conversion factors remain constant at 2030 values throughout the remainder of the forecast.

e. HVAC Interaction Factor

In the March 2008 ANOPR, DOE assumed a 6.25 percent HVAC interaction factor. The HVAC interaction factor measures the reduced cooling loads and increased heating loads that result from their interaction with more-efficacious lighting systems. For example, a 6.25 percent HVAC interaction factor means that one quad of energy savings due to lamps standards results in 1.0625 quads of total energy savings after the interaction with heating, ventilation, and air conditioning systems is taken into account. At the public meeting, PG&E stated that DOE's assumed level for this factor was too low. PG&E argued that if the heat from these products goes directly into the building and it takes one unit of electric energy to remove three units of heat, 6.25 percent was a very conservative number. (Public Meeting Transcript, No. 21 at pp. 333–334) Industrial Ecology agreed that 6.25 percent was on the low end of most estimates and cited the following rule of thumb used in the service industry: One saves a quarter of a watt in HVAC operation for every watt one saves ceiling lighting systems. Industrial Ecology suggested that DOE should look into other studies for more information on the HVAC interaction factor. (Public Meeting Transcript, No. 21 at pp. 333–334)

DOE is unaware of any other national-level studies that may be useful in estimating the HVAC factor specific to lighting over the entire calendar year. Therefore, DOE continues to use the study [56] that originated from the 2000 Ballast Rule. DOE notes that it has updated the study since its original publication and that it is a national-level analysis covering many building types across several climate zones.

f. Rebound Effect

In its analyses, DOE accounted for an anticipated ''rebound effect'' [57] that may occur after the installation of energy efficient lighting equipment. After consulting the literature [58] reporting on this effect, DOE used in the March 2008 ANOPR an 8.5-percent rebound effect for the residential sector and a 1-percent effect in the commercial sector, with every 100 percent increase in energy efficiency. NEMA agreed with DOE's inclusion of the rebound effect, but commented that more research needs to be done to characterize its magnitude. (NEMA, No. 22 at p. 30) DOE is unaware of other data that would affect its current rebound effect assumptions. DOE invites additional comments on this issue and will consider incorporating any relevant data provided.

g. Discount Rates

In its analyses, DOE multiplies monetary values in future years by a discount factor in order to determine their present value. DOE estimated national impacts using both a 3-percent and a 7-percent real discount rate as the average real rate of return on private investment in the U.S. economy. The Joint Comment argued that DOE should use a 2-percent to 3-percent real discount rate, noting other rulemakings and extensive academic research supporting a real societal discount rate in that range. (Joint Comment, No. 23 at p. 22) While DOE acknowledges the comment, the Department notes that it is required to follow guidelines on discount factors set forth by the Office of Management and Budget (OMB). Specifically, DOE uses these discount rates in accordance with guidance that OMB provides to Federal agencies on the development of regulatory analysis (OMB Circular A–4 (Sept.17, 2003), particularly section E, ''Identifying and Measuring Benefits and Costs''). Accordingly, DOE is continuing to use 3-percent and 7-percent real discount rates for the relevant calculations in this NOPR.

F. Consumer Subgroup Analysis

In analyzing the potential impacts of new or amended standards, DOE evaluates the impacts on identifiable subgroups of consumers (*e.g.*, low-income households or small businesses) that may be disproportionately affected by a national standard. In the March 2008 ANOPR, DOE requested comments on subgroups that should be considered for the NOPR analysis. 73 FR 13620, 13682 (March 13, 2008). NEMA commented that DOE should assess the impacts of standards on low-income consumers, as well as houses of worship, historical facilities, and institutions that serve low-income populations. (NEMA, No. 22 at p. 32)

DOE researched the suggested subgroups using the 2001 RECS and 2003 CBECS databases and the 2002 U.S. Lighting Market Characterization. The Residential Furnaces and Boilers NOPR,[59] Central Air Conditioners Supplemental Notice of Proposed Rulemaking,[60] and Clothes Washers Final Rule [61] defined ''low-income consumers'' as residential consumers with incomes at or below the poverty line, as defined by the U.S. Census Bureau. DOE has defined ''low-income consumers'' in the same way for this

[56] U.S. Department of Energy—Energy Efficiency and Renewable Energy Office of Building Research and Standards. *Technical Support Document: Energy Efficiency Standards for Consumer Products: Fluorescent Lamp Ballast Proposed Rule: Appendix B. Marginal Energy Prices and National Energy Savings.* January 2000. Washington, DC. *http://www.eere.energy.gov/buildings/appliance_standards/residential/pdfs/appendix_b.pdf.*

[57] Under economic theory, ''rebound effect'' refers to the tendency of a consumer to respond to the cost savings associated with more-efficient equipment in a manner that actually leads to marginally greater product usage, thereby diminishing some portion of anticipated energy savings related to improved efficiency.

[58] Greening, L.A., D.L. Greene, and C. Difiglio, ''Energy efficiency and consumption—the rebound effect—a survey,'' 28 *Energy Policy* (2000), pp. 389–401.

[59] U.S. Department of Energy—Office of Energy Efficiency and Renewable Energy, *Technical Support Document: Energy Conservation Program for Consumer Products: Energy Conservation Standards for Residential Furnaces and Boilers Proposed Rule: Chapter 11* (2006). Available at: *http://www1.eere.energy.gov/buildings/appliance_standards/residential/pdfs/furnaces_boilers/fb_tsd_chapt11_0906.pdf* (Last accessed Dec. 8, 2008).

[60] U.S. Department of Energy—Office of Energy Efficiency and Renewable Energy, *Technical Support Document: Energy Conservation Program for Consumer Products: Central Air Conditioners and Heat Pumps Energy Conservation Standards Proposed Rule: Chapter 10* (2001). Available at: *http://www1.eere.energy.gov/buildings/appliance_standards/residential/pdfs/chap10_sub-grp.pdf* (Last accessed Dec. 8, 2008).

[61] U.S. Department of Energy—Office of Energy Efficiency and Renewable Energy, *Technical Support Document: Energy Conservation Program for Consumer Products: Clothes Washer Energy Conservation Standards Final Rule: Chapter 18* (2001). Available at: *http://www1.eere.energy.gov/buildings/appliance_standards/residential/pdfs/chapter_8_consumer_analysis.pdf.* (Last accessed Dec. 8, 2008).

rule. DOE discovered that in 2001, residential low-income consumers faced electricity prices that were 0.1 cents per kWh lower than the prices faced by consumers above the poverty line. Using this information, DOE performed a subgroup analysis of low-income consumers for the NOPR, the key findings of which are presented below and addressed in section VI.B.1.b.

DOE found that houses of worship used their lamps for fewer hours per year than any other building type in the non-mall commercial building sector, according to the 2003 CBECS and LMC. DOE analyzed houses of worship using 1,705 operating hours per year for GSFL (rather than 3,435 hours per year for an average commercial facility) and 1,609 operating hours per year for IRL (rather than 3,450 hours per year for an average commercial facility).

DOE also found that a wide range of sites (from single buildings to entire districts) are classified as ''historical facilities.'' Because historical facilities serve a range of functions, DOE assumed that such facilities also feature the same variety of operating hours, electricity prices, and discount rates as a typical consumer. However, DOE did find that these buildings, on average, have more T12 lamps than the typical commercial or residential building. Therefore, in its subgroup analysis for historical facilities, DOE concentrated on the LCC analysis and results for those consumers with T12 fluorescent lamps.

DOE also found a wide array of nonprofit and for-profit organizations that serve low-income populations. Because of the large diversity of organizations in this sector, DOE does not expect to see operating hours, lamp types, or event response behaviors that vary significantly from the commercial sector as a whole. However, DOE believes that the majority of organizations serving low-income populations are small nonprofits. For this reason, DOE chose a subgroup scenario with a discount rate that is 3.8 percent higher than the average discount rate for the commercial sector (for a discount rate of 10.8 percent), based on the sources used to develop the discount rate for small business subgroups in the Ovens and Commercial Clothes Washers NOPR analysis.[62]

Although NEMA did not request that DOE analyze consumers of T12 electronic systems, DOE decided to analyze this subgroup as well, because consumers that already have a T12 electronic system could potentially benefit less from standards than those consumers with magnetic systems. Specifically, consumers that own a T12 electronic system in the base case would need to purchase a T8 electronic system in the case of an energy conservation standard at EL4 or EL5. Because the T12 electronic system is more efficient than T12 magnetic systems, consumers with electronic systems would experience lower operating cost savings than those consumers with magnetic systems. In order to analyze the affect on consumers of T12 electronic systems, DOE established a new baseline electronic T12 system and modified standards-case systems so that both light output is maintained in the case of a standard and energy is saved. For this subgroup, DOE only analyzed the event where a consumer purchases a T12 lamp in the baseline and a T8 lamp and ballast system in the case of a standard at EL4 and EL5, as T12 lamps are no longer available. All other factors of the LCC subgroup analysis remained the same as in the primary analysis. See the NOPR TSD chapter 12 for further information on the LCC analyses for all subgroups.

G. Manufacturer Impact Analysis

1. Overview

DOE performed an MIA to estimate the financial impact of higher energy conservation standards on GSFL and IRL manufacturers, and to calculate the impact of such standards on domestic manufacturing employment and capacity. The MIA has both quantitative and qualitative aspects. The quantitative part of the MIA primarily relies on two separate Government Regulatory Impact Models (GRIMs)—industry-cash-flow models customized for this rulemaking. The GRIM inputs are data characterizing the industry cost structure, shipments, and revenues. The key output is the industry net present value. Different sets of assumptions (scenarios) will produce different results. The qualitative part of the MIA addresses factors such as product characteristics, characteristics of particular firms, and market and product trends, and it also includes an assessment of the impacts of standards on subgroups of manufacturers. The complete MIA is outlined in chapter 13 of the TSD.

DOE conducted the MIA in three phases. Phase 1, ''Industry Profile,'' consisted of the preparation of an industry characterization. Phase 2, ''Industry Cash Flow,'' focused on the industry as a whole. In this phase, DOE used two separate GRIMs (one for the GSFL industry and one for IRL industry) to prepare an industry cash-flow analysis. DOE used publicly-available information developed in Phase 1 to adapt each GRIM structure to facilitate the analysis of amended GSFL and IRL standards. In Phase 3, ''Subgroup Impact Analysis,'' DOE conducted interviews with manufacturers representing the majority of domestic GSFL and IRL sales. During these interviews, DOE discussed engineering, manufacturing, procurement, and financial topics specific to each company, and also obtained each manufacturer's view of the industry as a whole. The interviews provided valuable information DOE used to evaluate the impacts of amended energy conservation standards on manufacturer cash flows, manufacturing capacities, and employment levels.

a. Phase 1, Industry Profile

In Phase 1 of the MIA, DOE prepared a profile of the GSFL and IRL industries based on the market and technology assessment prepared for this rulemaking. Before initiating the detailed impact studies, DOE collected information on the present and past structure and market characteristics of the GSFL and IRL industries. The information DOE collected included market share, product shipments, markups, and cost structure for various manufacturers. The industry profile includes further detail on the overall market, product characteristics, estimated manufacturer market shares, the financial situation of manufacturers, and trends in the number of firms in the lamp industry.

The industry profiles included a top-down cost analysis of GSFL and IRL manufacturers that DOE used to derive product costs and preliminary financial inputs for the GRIM (*e.g.*, revenues; material, labor, overhead, and depreciation expenses; selling, general, and administrative expenses (SG&A); and research and development (R&D) expenses). DOE also used public information to further calibrate its initial characterization of the industry, including Securities and Exchange Commission (SEC) 10–K and 20–F reports, Standard & Poor's (S&P) stock reports, and corporate annual reports.

[62] U.S. Department of Energy—Office of Energy Efficiency and Renewable Energy, *Technical Support Document: Energy Conservation Standards for Certain Consumer Products (Dishwashers, Dehumidifiers, Electric and Gas Kitchen Ranges and Ovens, and Microwave Ovens) and for Certain Commercial and Industrial Equipment (Commercial Clothes Washers): Chapter 12* (2008). Available at: *http://www1.eere.energy.gov/buildings/appliance_standards/residential/pdfs/home_appliances_tsd/chapter_12.pdf.* (Last accessed Dec. 8, 2008).

b. Phase 2, Industry Cash-Flow Analysis

Phase 2 of the MIA focused on the financial impacts of potential amended energy conservation standards on the industries as a whole. DOE used the GRIMs to calculate the financial impacts of standards on manufacturers. DOE used two separate GRIMs, one for each industry analyzed (GSFL and IRL). In Phase 2, DOE used each GRIM to perform a preliminary industry cash-flow analysis. In performing this analysis, DOE used the financial values determined during Phase 1 and the shipment scenarios used in the NIA analysis.

c. Phase 3, Subgroup Impact Analysis

Using average cost assumptions to develop an industry-cash-flow estimate does not adequately assess differential impacts among manufacturer subgroups. For example, small manufacturers, niche players, or manufacturers exhibiting a cost structure that largely differs from the industry average could be more negatively affected. DOE used the results of the industry characterization analysis (in Phase 1) to group manufacturers that exhibit similar characteristics.

During the ANOPR public meeting, Industrial Ecology commented that small lamp manufacturers may be disproportionately affected by IRL and GSFL standards. (Public Transcript, No. 21 at pp. 354–356) DOE established two subgroups for the MIA corresponding to large and small business manufacturers of GSFL and IRL products. For the GSFL and IRL manufacturing industries, small businesses, as defined by the Small Business Administration (SBA), are manufacturing enterprises with 1,000 or fewer employees. Based on identification of these two subgroups, DOE prepared one interview guide with questions related to both GSFL and IRL manufacturing for large and small manufacturers. DOE used the interview guide to tailor the GRIMs to address unique financial characteristics of manufacturers of each industry. DOE interviewed companies from each subgroup, including subsidiaries and independent firms and public and private corporations. The purpose of the meetings was to develop an understanding of how manufacturer impacts vary by TSL. During the course of the MIA, DOE interviewed manufacturers representing the vast majority of domestic GSFL and IRL sales. Many of these same companies also participated in interviews for the engineering analysis. However, the MIA interviews broadened the discussion from primarily technology-related issues to include business-related topics. One objective was to obtain feedback from industry on the assumptions used in the GRIM and to isolate key issues and concerns. See chapter 13 of the TSD for details.

2. Discussion of Comments

In response to DOE's March 2008 ANOPR presentation of the steps DOE would take during the MIA for the NOPR, DOE received several comments related to the high price and limited availability of xenon. NEMA commented that xenon gas was the only viable option for higher-efficiency fill gas and cited manufacturer concerns about its limited supply and quickly escalating prices. (NEMA, No. 22 at p. 8) NEMA also stated that assumptions DOE uses in its analysis can become invalid quickly, citing the price of xenon as an example of an assumption that could seriously affect their business. (NEMA, No. 21 at p. 108–109) During the manufacturer interviews, manufacturers contended that the global supply of xenon was fixed and that competition with other applications (*i.e.*, anesthesia) has caused the price of xenon to increase ten-fold over the last year. After receiving these comments, DOE conducted its own research to determine if market conditions for xenon could affect its use as a higher-efficiency fill gas.

According to DOE's research, xenon is one of three rare gases (along with neon and krypton) produced by cryogenic air separation. Given the low concentration of the rare gases in the air (neon 0.002 percent, krypton 0.0001 percent, and xenon 0.00001 percent),[63] the only cost-effective recovery options are large air-separation units. Most worldwide supply is met by the three largest industrial gas companies (Air Liquide, Praxair, and Linde); another major supplier is Iceblick, a former State-controlled enterprise of the Soviet Union.

Major applications for xenon include lighting, television flat panel displays, the space industry (for ion engines and satellite repositioning), medical imaging and anesthesia, and electronic chip manufacturing. All applications are growing rapidly. Demand from the semiconductor industry alone increased from less than 1 million liters per year in June 2007 to almost 3 million liters per year in June 2008. Demand for xenon has also grown significantly in the last 18 months, greatly outpacing the 12 million liters of worldwide xenon production.[64] While there remain essentially inexhaustible supplies of xenon in the atmosphere, considerable investment would be required to expand global production substantially. Since it is impossible to immediately increase supply to meet demand, spot prices have increased from $3–$4 per liter to $28–$35 per liter for large cylinders.[65] These higher prices are likely to be sustained in the near-term until supply can meet the growing demand.

DOE estimates that the increased demand for xenon as a result of this rulemaking would range from 3.2 percent to 12.8 percent of current worldwide production in the first year the rulemaking takes effect. Over the 30-year analysis period, the increased demand for xenon could range from 0.5 percent to 18 percent of current worldwide production, depending on the scenario analyzed. This increased demand is expected to have little long-term effect on the price or availability of xenon, considering the other contributing factors. Rapid growth or decline of existing markets or the discovery of a new application could significantly affect the total demand for xenon, perhaps even more than this rulemaking. Furthermore, the above numbers are based on the current worldwide production (12 million liters) and assume no increase in production over the analysis period. This is highly unlikely, given that current demand substantially exceeds supply. Any future increase in xenon production would decrease the percentages mentioned above. Thus, DOE has tentatively concluded that the amount of xenon required by lamp manufacturers to produce lamps that meet the proposed standards would not significantly affect the price or availability of xenon. DOE also conducted an LCC sensitivity analysis to determine the impact of higher xenon prices on the consumer. For more information on the xenon market analysis and the consumer impacts of higher xenon prices, see appendix 3B of the TSD.

In the GSFL industry, manufacturers stated that the ''rare earth phosphors'' are a key component of GSFL performance. During the comment period, some manufacturers expressed concern that higher CSLs would necessitate increasing mixes of the costly rare earth phosphors in the lamp coating. These manufacturers stated that more stringent standards would drive

[63] See *http://www.airliquide.com/file/otherelement/pj/airliquide2007gb_bd_ok12439.pdf*, p. 110.

[64] Betzendahl, Richard, ''The Rare Gets More Rare: The Rare Gases Market Update'' (*CryoGas International*) (June 2008) 26.

[65] Id.

up demand for (and the price of) rare earth phosphors, which already face significant supply constraints. These manufacturers added that continued growth in the CFL market will also capture an increasing share of available phosphor supply in the future, potentially increasing prices and jeopardizing the cost-effectiveness of the standards. Depending on the lamp type, rare earth phosphors can be the highest input cost of a GSFL.

Manufacturers also noted that higher standards could drive manufacturing processes to China, where the vast majority of rare earth phosphors are mined. Coupled with cheaper labor and high export tariffs, the incentive to move production of lamps to China might prove too great to resist. To address these concerns, DOE analyzed the rare earth phosphor market to understand the potential impact of the standards on supply and demand, pricing, growth, and innovation. DOE also analyzed the impact on employment for domestic manufacturers.

Because the UV radiation emitted within the lamp by the reaction of the electrons and mercury vapor is invisible, manufacturers must coat the inside of the lamp's glass with powered phosphors. The phosphors fluoresce when struck by the UV radiation and convert it into visible light. Less-efficient, low-cost lamps only use ''halophosphors'' to coat the lamp. Halophosphors are more abundant and much less costly than rare earth phosphors, but are also less efficient and produce a lower quality light. Coating a lamp with a layer of rare earth phosphors in addition to, or in place of, halophosphors can increase efficacy, while dramatically improving color quality and lumen maintenance. The coating's blend of phosphors determines, in part, the CCT and CRI of the lamp. The lamp coating of high-performance GSFL, often called a ''triband'' or ''triphosphor'' blend, commonly includes three key elements—terbium, europium, and yttrium. Terbium and europium are the rarest and reflect the greatest portion of the coating's cost.

DOE evaluated the impact of standards on the phosphor markets and concluded that mandating TSL5 would increase the global demand and prices of these phosphors. DOE expects 2012 terbium demand to be 31 percent greater at TSL5 in the Shift-High Consumer Expertise scenario than it would be in the Existing Technologies base case. DOE estimates europium demand would increase by 10 percent, while Yttrium demand would increase marginally. These estimates reflect the upper bound of demand increases.

Given the historically volatile prices of these phosphors and the unpredictable future determinants of supply and demand (such as Chinese policy, additional mining operations, and future technological changes), DOE has not developed supply and demand curves in order to estimate future phosphor prices. However, DOE recognizes significant price increases are possible given the expected surge in demand, particularly for terbium and europium. Therefore, to analyze the impact of higher phosphor prices, DOE also conducted a sensitivity analysis to address the potential increases in lamp prices attributable to greater phosphor costs on the consumer. That is, DOE compares LCC savings with current phosphor costs to LCC savings under a scenario with higher phosphor prices. Appendix 3C shows the results of this sensitivity analysis and the rare earth phosphor market analysis.

Additionally, DOE found several rare earth mining projects in development around the world that have the capacity to increase rare earth supply. If prices continue to climb, DOE expects the economics of mining rare earths to encourage more projects, and make less-concentrated rare earth deposits economically viable, which will increase supply. For these reasons, DOE does not believe standards, and their potential impact on phosphor prices, will affect product availability.

3. Government Regulatory Impact Model Analysis

The GRIM analysis uses a standard, annual cash-flow analysis that incorporates manufacturer prices, manufacturing costs, shipments, and industry financial information as inputs and models changes in costs, distribution of shipments, investments, and associated margins that would result from new or amended regulatory conditions (in this case, standard levels). The GRIM spreadsheet uses a number of inputs to arrive at a series of annual cash flows, beginning with the base year of the analysis (2007) and continuing to 2042. DOE calculated INPVs by summing the stream of annual discounted cash flows during this period.

DOE used the GRIM to calculate cash flows using standard accounting principles and to compare changes in INPV between a base case and various TSLs (the standards cases). Essentially, the difference in INPV between the base case and a standards case represents the financial impact of the amended energy conservation standards on manufacturers. DOE collected this information from a number of sources, including publicly-available data and interviews with manufacturers. See chapter 13 of the TSD for details.

4. Manufacturer Interviews

As part of the MIA, DOE discussed potential impacts of amended energy conservation standards with manufacturers responsible for the vast majority of domestic GSFL and IRL sales. The manufacturers interviewed produce approximately 90 percent of GSFL for sale and 85 percent of IRL for sale. These interviews were in addition to those DOE conducted as part of the engineering analysis. The interviews provided valuable information that DOE used to evaluate the impacts of amended energy conservation standards on manufacturer cash flows, manufacturing capacities, and employment levels.

a. Key Issues

i. GSFL

Rare earth phosphor availability and price—All of the GSFL manufacturers DOE interviewed are concerned about the availability and price of rare earth phosphors. Due to the importation of rare earth phosphors, any increases in duties paid to producing countries, such as China, could have significant impacts on lamp manufacturing costs. Any increase in lamp material costs directly affects manufacturer profitability. According to manufacturers, meeting higher energy conservation standards for GSFL would require an increase in rare earth phosphor content in lamp coatings. These manufacturers stated that higher energy conservation standards would drive up demand for and prices of rare earth phosphors, which are already in short supply. In addition, manufacturers stated that the continued growth in the CFL market will erode future supply, jeopardizing the cost-effectiveness of the standards. Depending on the lamp type, rare earth phosphors can be the highest input cost of a GSFL. Some manufacturers also noted that higher standards could drive manufacturing processes to China, where the vast majority of rare earth phosphors are mined. Issues with rare earth phosphors are specifically addressed in appendix 3C of the TSD.

Reduction in product portfolio—Some manufacturers are concerned that energy conservation standards will force manufacturers to eliminate some product lines, shrinking their overall marketability. According to manufacturers, the ability to survive in the industry is related to the companies'

diverse product portfolios. Companies benefit from a wide range of products and efficiencies. Depending on the characteristics of the product, manufacturers can up-sell to products that reap higher profits. Manufacturers are concerned that reducing the product portfolio will reduce options for customers and, ultimately, profitability.

Profit margin impact—All manufacturers stated that energy conservation standards have the potential to greatly harm their profitability. Manufacturers enjoy a higher profit margin on higher-efficacy or premium products than lower-end or baseline products. Since higher-efficacy or premium products tend to incorporate design options that increase energy efficiency, a high-efficiency standard would commoditize such products and subsequently lower the overall manufacturer markup on shipments. Several manufacturers stated it is very difficult to pass along cost increases to customers because of the competitive nature of the industry. Therefore, they believe any cost increase due to standards set by DOE would automatically lower profit margins.

ii. IRL

Product performance issues—All manufacturers stated that implementation of design options to meet the proposed energy conservation standards could cause a reduction in product lifetime. Manufacturers stated that all standard levels could be met by lamps that combine improved technology with shorter life. In addition to this broad possibility, manufacturers indicated that the product lifetime of infrared lamps that meet efficacy levels prescribed by TSL3, TSL4, and TSL5 could be lowered due to the ''hot shock'' application problem. If infrared lamps are installed in a live fixture, sections of the lamp's filament can fuse together, possibly decreasing the lifetime by 25 to 30 percent. Manufacturers are concerned that both the performance issues of hot shock and shorter life could impact consumers' acceptance of covered IRL products. Any dissatisfaction resulting lower lifetimes of standards-compliant lamps could hasten the shift to competing technologies, which have much longer lifetimes.

Xenon gas availability and price—According to several manufacturers, most higher-efficacy model lamps at each TSL use xenon to increase efficacy. While using a different fill gas does not require significant capital investments, manufacturers stated that xenon prices have increased as much as ten-fold in the past few years. In the short term, global supplies of xenon are limited by existing production capacity, so the IRL industry has to compete with other industries, such as medical applications, that are better able to support higher prices. For more information on DOE's analysis of this issue, see appendix 3B of the TSD and section V.G.2 of today's notice.

Elimination of product types in the manufacturers' product portfolio—Manufacturers are concerned that at higher efficacy levels, all lamps will need to switch to all infrared technology, which would significantly reduce product offerings.

Elimination of small-diameter lamps—Manufacturers are concerned that energy conservation standards could eliminate smaller-diameter lamps. Because of the small size, all manufacturers use a single-ended quartz burner in lamps smaller than PAR30, limiting potential efficacy improvements. Although DOE scales its standard to smaller-diameter lamps and there are existing PAR20 lamps at all TSLs, manufacturers are concerned that the improvements for small-diameter lamps at high TSLs could be impossible or cost prohibitive. DOE addresses the issues of small-diameter lamps in section V.C.7.b.ii of today's notice.

Competition—Manufacturers stated that some TSLs could affect competition within the industry. For example, one manufacturer has a patent on silverized reflectors. While DOE did not set TSLs around this technology, this manufacturer could meet TSL2 with cheaper lamps than its competitors. One manufacturer has a cross license on the technology, but has not made silverized lamps recently and would incur substantial capital and conversion costs to produce them. There are competitive concerns at TSL4 and TSL5 as well. Two manufacturers have a full line of products that currently meet TSL4. The third manufacturer has some products at this level, but is concerned that it would have to incur significantly larger capital costs at TSL4 to redesign and manufacture different burners, which could put it at a competitive disadvantage. Only one manufacturer currently has a full line of products at TSL5. At TSL4 and TSL5, standards-compliant lamps could combine HIR technology with an improved reflector, potentially putting the company that does not have access to silverized reflectors at a disadvantage.

Market erosion—Manufacturers stated that emerging technology is already starting to penetrate the IRL market. A standard on IRL would be unique because it would force investments in a market that would shrink over the entire lifetime of the investment. Depending on market penetration of emerging technology, these investments might never be recouped. Also, manufacturers are concerned that a standard on IRL could hasten the switch to emerging technology by lowering the difference in their first cost price. If the standard did increase the natural migration toward new technology, it would be less likely that manufacturers would make the substantial investments to modify IRL production equipment. Finally, manufacturers are concerned that the BR exemptions in EISA 2007 could also erode the market: The higher the IRL standard, the lower the relative cost of the exempted incandescent lamps. If a lower relative cost causes a large shift to exempted incandescent lamps, it is less likely that investments in improved halogen lamps could be justified. To address emerging technologies and BR exemptions issues discussed by manufacturers, DOE included several shipment scenarios in both the NIA and the GRIM. See chapter 10 and chapter 13 of the TSD for a discussion of the shipment scenarios used in the respective analysis.

b. Government Regulatory Impact Model Scenarios and Key Inputs

i. GSFL Base-Case Shipment Forecast

In the GSFL GRIM, DOE estimated manufacturer revenues, based on unit shipment forecasts and distribution by product class and efficacy. Changes in the product mix at each standard level are a key driver of manufacturer finances. For this analysis, the GSFL GRIM incorporated the two base-case shipment scenarios from the NIA. In the Existing Technologies base case shipment scenario, DOE assumed that in the base case customers would not migrate to emerging technologies. DOE also modeled an Emerging Technologies base-case shipment scenario. In this scenario, GSFL shipments are eroded in the base case as more customers purchase emerging technology rather than covered GSFL. Table V.7 and Table V.8 show total shipments forecasted by the NIA for the 2012 and 2042 GSFL base cases. For further information on the GSFL base-case shipment forecast, see chapter 10 of the TSD.

TABLE V.7—GSFL EMERGING TECHNOLOGIES BASE CASE TOTAL NIA-FORECASTED SHIPMENTS IN 2012 AND 2042

Product class	Total industry shipments for 2012*	Total industry shipments for 2042*
4-Foot MBP	479,177,000	490,528,000
8-Foot SP Slimline	22,448,000	6,873,000
8-Foot RDC HO	17,654,000	2,320,000
4-Foot T5	24,225,000	79,906,000
4-Foot T5 HO	23,610,000	67,857,000

* Figures rounded to the nearest thousand.

TABLE V.8—GSFL EXISTING TECHNOLOGIES BASE CASE TOTAL NIA-FORECASTED SHIPMENTS IN 2012 AND 2042

Product class	Total industry shipments for 2012*	Total industry shipments for 2042*
4-Foot MBP	479,177,000	645,323,000
8-Foot SP Slimline	22,448,000	6,873,000
8-Foot RDC HO	17,654,000	2,320,000
4-Foot T5	24,225,000	105,863,000
4-Foot T5 HO	23,610,000	67,857,000

* Figures rounded to the nearest thousand.

ii. IRL Base Case Shipments Forecast

As with the GSFL GRIM, the IRL GRIM incorporated the two base-case shipment scenarios from the NIA for the period of 2007 to 2042 (Existing and Emerging Technologies base cases). Table V.9 and Table V.10 show total shipments forecasted by the NIA for the 2012 and 2042 IRL for both base cases. The tables include the base-case shipments in 2020 because the impacts under the Emerging Technologies base case are most apparent in the years after the standard becomes effective and the differences between the base cases are easily demonstrated in 2020. For further information on IRL base case shipment forecast, see chapter 10 of the TSD.

TABLE V.9—IRL EXISTING TECHNOLOGIES BASE CASE TOTAL NIA-FORECASTED SHIPMENTS IN 2012 AND 2042

Product class	Total industry shipments in 2012*	Total industry shipments in 2020*	Total industry shipments in 2042*
PAR38 90W	56,459,000	62,990,000	88,566,000
PAR38 75W	44,065,000	49,163,000	69,124,000
PAR30 50W	30,738,000	35,759,000	51,180,000

* Figures rounded to the nearest thousand.

TABLE V.10—IRL EMERGING TECHNOLOGIES BASE CASE TOTAL NIA-FORECASTED SHIPMENTS IN 2012 AND 2042

Product class	Total industry shipments in 2012*	Total industry shipments in 2020*	Total industry shipments in 2042*
PAR38 90W	52,393,000	31,654,642	52,978,000
PAR38 75W	40,892,000	24,706,062	41,349,000
PAR30 50W	28,417,000	17,318,155	30,058,000

* Figures rounded to the nearest thousand.

iii. GSFL Standards Case Shipments Forecast

All shipment forecasts in the GSFL GRIM are obtained from the GSFL NIA. Consequently, the GSFL GRIM included two efficacy distribution scenarios (shift and roll-up), and two lighting expertise scenarios (high- and market segment-based lighting expertise). For additional details on the various shipment scenarios, see TSD chapter 10.

iv. IRL Standards-Case Shipments Forecast

To characterize consumer behavior in the IRL standards-case GRIM, DOE considered the four shipment scenarios found in the NIA. The IRL GRIM considered two efficacy distributions scenarios (shift and roll-up) and two product substitution scenarios (product substitution and no product substitution). See chapter 10 of the TSD for additional details on the IRL standards-case shipment scenarios.

v. Manufacturing Production Costs

DOE derived manufacturing production costs by using end-user prices found in the NIA and discounting them using typical markups along the retail distribution chain. To calculate manufacturer selling prices from these end-user prices, DOE divided the medium end-user prices in the NIA by a typical markup for retail locations that sell the covered products. DOE calculated the markup for retail locations using the revenues and cost of

goods sold from the annual reports of publicly-traded companies. To determine manufacturer production costs from manufacturing selling price, DOE divided manufacturing selling prices by the manufacturer markup. The manufacturer markup was calculated with the same publicly-available information used to calculate other GRIM financial inputs (*e.g.*, industry-wide tax rate and working capital). Further discussion of how DOE calculated other GRIM financial inputs from publicly-available information is found in chapter 13 of the TSD.

vi. Amended Energy Conservation Standards Markup Scenarios

In both the IRL and GSFL GRIM, DOE modeled a flat markup scenario. This scenario assumed that the cost of goods sold for each lamp is marked up by a flat percentage to cover standard SG&A expenses, R&D expenses, and profit. To derive this percentage, DOE evaluated publicly-available financial information for manufacturers of lighting equipment.

For GSFL only, DOE also modeled a four-tier markup scenario. In this scenario, DOE assumed that the markup on lamps varies by efficacy in both the base case and the standards case. DOE learned from manufacturers that pricing for GSFL is typically determined on the basis of four product tiers, corresponding to different phosphor series. During the MIA interviews, manufacturers provided information on the range of typical efficacy levels in these four tiers and the change in profitability for each level. DOE used this information, retail prices derived in its product price determination, and industry average gross margins to estimate markups for GSFL under a four-tier pricing strategy in the base case. In the standards case, DOE modeled the situation in which portfolio reduction squeezes the margin of higher-efficacy products as they are ''demoted'' to lower-relative-efficacy-tier products. This scenario is in line with information submitted during manufacturing interviews, which responds to manufacturers' concern that DOE standards could severely disrupt profitability.

The four-tier markup scenario was not modeled for IRL because markups do not increase as a function of efficacy as is the case for GSFL. Thus, this scenario is not representative of the IRL industry.

vii. Product and Capital Conversion Costs

Energy conservation standards typically cause manufacturers to incur one-time conversion costs to bring their production facilities and product designs into compliance with the amended standards. For the purpose of the MIA, DOE classified these conversion costs into two major groups: (1) Product conversion costs; and (2) capital conversion costs. Product conversion expenses are one-time investments in research, development, testing, and marketing, focused on making product designs comply with the new energy conservation standard. Capital conversion expenditures are one-time investments in property, plant, and equipment to adapt or change existing production facilities so that new product designs can be fabricated and assembled.

DOE assessed the R&D expenditures manufacturers would be required to make at each TSL. DOE obtained financial information through manufacturer interviews and aggregated the results to mask any proprietary or confidential information from any one manufacturer. DOE considered a number of manufacturer responses for GSFL and IRL at each TSL. DOE estimated the total product conversion expenses by gathering manufacturer responses, then weighted these data by market share.

DOE also evaluated the level of capital conversion expenditures manufacturers would incur to comply with amended energy conservation standards. DOE used the manufacturer interviews to gather data on the level of capital investment required at each TSL. Manufacturers explained how different TSLs affected their ability to use existing plants, tooling, and equipment. From the interviews, DOE was able to estimate what portion of existing manufacturing assets would need to be replaced and/or reconfigured, and what additional manufacturing assets would be required to manufacture the higher-efficacy products. In most cases, DOE projected that the proportion of existing assets that manufacturers would have to replace would increase as standard levels for GSFL and IRL increase. For GSFL, DOE included capital costs for the natural market shift from T12 to T8 lamps in the base case. For IRL, the capital conversion expenses manufacturers provided during interviews were based on converting their manufacturing equipment to meet the current volume of shipments. Since the shipments projected in the NIA decrease in the base cases, DOE scaled the conversion capital investments to account for the decline in shipments from 2008 to the year the standard becomes effective. DOE also consulted an independent supplier of IRL coaters to identify additional costs above TSL4 that would be needed for manufacturers to meet TSL5.

The investment figures used in the GRIM can be found in section VI.B.2.a of today's notice. For additional information on the estimated product conversion and capital conversion costs, see chapter 13 of the TSD.

H. Employment Impact Analysis

DOE considers employment impacts in the domestic economy as one factor in selecting a proposed standard. Employment impacts include direct and indirect impacts. Direct employment impacts are any changes in the number of employees for manufacturers of the appliance products that are the subject of this rulemaking, their suppliers, and related service firms. Indirect employment impacts are employment changes in the larger economy that occur due to the shift in expenditures and capital investment caused by the purchase and operation of more-efficient appliances. The MIA addresses the portion of direct employment impacts that concern manufacturers of GSFL and IRL (see section V.G); this section addresses indirect impacts.

Indirect employment impacts from standards consist of the net jobs created or eliminated in the national economy, other than in the manufacturing sector being regulated, due to: (1) Reduced spending by end users on energy (*i.e.*, electricity); (2) reduced spending on new energy supply by the utility industry; (3) increased spending on the purchase price of new products; and (4) the effects of those three factors throughout the economy. DOE expects the net monetary savings from standards to be redirected to other forms of economic activity. DOE also expects these shifts in spending and economic activity to affect the demand for labor in the short term, as explained below.

One method for assessing the possible effects on the demand for labor of such shifts in economic activity is to compare sectoral employment statistics developed by the Labor Department's Bureau of Labor Statistics (BLS).[66] BLS regularly publishes its estimates of the number of jobs per million dollars of economic activity in different sectors of the economy, as well as the jobs created elsewhere in the economy by this same economic activity. Data from BLS indicate that expenditures in the utility

[66] Data on industry employment, hours, labor compensation, value of production, and the implicit price deflator for output for these industries are available upon request by calling the Division of Industry Productivity Studies (202–691–5618) or by sending a request by e-mail to *dipsweb@bls.gov*. Available at: *http://www.bls.gov/news.release/prin1.nr0.htm*.

sector generally create fewer jobs (both directly and indirectly) than expenditures in other sectors of the economy. There are many reasons for these differences, including differences in wages and the fact that the utility sector is more capital intensive and less labor intensive than other sectors. See Bureau of Economic Analysis, ''A User Handbook for the Regional Input-Output Modeling System (RIMS II), '' Third Edition, Washington, DC, U.S. Department of Commerce, March 1997.[67]

Efficiency standards have the effect of reducing consumer utility bills. Because reduced consumer expenditures for energy likely lead to increased expenditures in other sectors of the economy, the general effect of efficacy standards is to shift economic activity from a less labor-intensive sector (*i.e.*, the utility sector) to more labor-intensive sectors (*e.g.*, the retail and manufacturing sectors). Thus, based on the BLS data alone, DOE believes net national employment will increase due to shifts in economic activity resulting from standards for GSFL and IRL.

In developing this proposed rule, DOE estimated indirect national employment impacts using an input/output model of the U.S. economy called ''Impact of Sector Energy Technologies'' (ImSET); ImSET is a spreadsheet model of the U.S. economy that focuses on 188 sectors most relevant to industrial, commercial, and residential building energy use.[68] ImSET is a special-purpose version of the ''U.S. Benchmark National Input-Output (I–O) Model,'' which has been designed to estimate the national employment and income effects of energy-saving technologies deployed by DOE's Office of Energy Efficiency and Renewable Energy. Compared with previous versions of the model used in earlier rulemakings, this version allows for more complete and automated analysis of the essential features of energy efficiency investments in buildings, industry, transportation, and the electric power sectors. The ImSET software includes a computer-based I–O model with structural coefficients to characterize economic flows among the 188 sectors. ImSET's national economic I–O structure is based on the 1997 U.S. benchmark table (Lawson, *et al.*, 2002),[69] specially aggregated to 188 sectors. DOE estimated changes in expenditures using the NIA spreadsheet. Using ImSET, DOE then estimated the net national indirect-employment impacts on employment in the manufacturing and energy industries of the new efficacy standards on employment by sector.

While both ImSET and the direct use of BLS employment data suggest the proposed standards could increase the net demand for labor in the economy, the gains would most likely be very small relative to total national employment. Therefore, DOE concludes only that the proposed standards are likely to produce employment benefits that are sufficient to fully offset, any adverse impacts on employment in the manufacturing or energy industries related to GSFL and IRL. See the TSD chapter 15.

NEMA agreed that ImSET would be the most appropriate tool to analyze employment impacts on a national scale. NEMA also suggested that DOE should be mindful of changes in production technologies and the associated flows of labor and capital across industries that could be needed under more-stringent efficacy standards, which would not necessarily be reflected in the ImSET I–O analysis. (NEMA, No. 22, p. 34)

In response, DOE believes that the fixed I–O matrix is generally adequate in predicting the range of magnitude of lighting savings. Changes in production technologies and the associated economic flows with direct employment implications are addressed in the MIA chapter (chapter 13) of the TSD. DOE uses the ImSET model to address indirect employment effects of the standards. For more details on the employment impact analysis, see TSD chapter 15.

I. Utility Impact Analysis

The utility impact analysis estimates the change in the forecasted power generation capacity of the Nation which would be expected to result from the adoption of new efficacy standards. This section discusses the methodology used, the results of which can be found in section 0. DOE used a version of EIA's National Energy Modeling System (NEMS) for this utility impact analysis. NEMS, which is available in the public domain, is a large, multisectoral, partial-equilibrium model of the U.S. energy sector. EIA uses NEMS to produce its *AEO*, a widely-recognized baseline energy forecast for the United States. The version of NEMS used for appliance standards analysis is called NEMS–BT and is primarily based on the *AEO 2008* with minor modifications.[70] The NEMS–BT offers a sophisticated picture of the effect of standards, since it accounts for the interactions between the various energy supply and demand sectors and the economy as a whole.

Specifically, NEMS–BT models certain policy scenarios, such as the effect of reduced electricity consumption, for each trial standard level. The analysis output provides a forecast for the needed generation capacities at each TSL. The estimated net benefit of the standard is the difference between the forecasted generation capacities by NEMS–BT and the *AEO2008* Reference Case.

DOE obtained the energy savings inputs for the utility impact analysis from the NIA's electricity consumption savings. These inputs reflect the effects on electricity of efficiency improvements due to the deployment of GSFL and IRL. Chapter 14 of the TSD accompanying this notice presents results of the utility impact analysis.

DOE received comments requesting that DOE report gas and electricity price impacts, and the economic benefits of reduced need for new electric power plants and infrastructure. The expectation is that lower electricity demand will lead to lower prices for both electricity and natural gas that would benefit consumers. The Joint Comment also stated that the benefits of reduced power plant and infrastructure costs may not be fully reflected in prices because consumers generally pay retail rates for electricity that are based on the average embedded cost of all the facilities used to serve them, rather than on marginal costs. (Joint Comment, No. 23 at pp. 20–22)

DOE considered reporting gas and electricity price impacts but found that the uncertainty of price projections, together with the fairly small impact of the standards relative to total electricity demand, makes these price changes highly uncertain. As a result, DOE believes that they should not be weighed heavily in the decision concerning the standard level. Given the current complexity of utility regulation

[67] Available at: *http://www.bea.gov/scb/pdf/regional/perinc/meth/rims2.pdf.*

[68] Roop, J. M., M. J. Scott, and R. W. Schultz. *ImSET: Impact of Sector Energy Technologies*, PNNL–15273 (Pacific Northwest National Laboratory) (2005).

[69] Lawson, Ann M., Kurt S. Bersani, Mahnaz Fahim-Nader, and Jiemin Guo, ''Benchmark Input-Output Accounts of the U.S. Economy, 1997,'' *Survey of Current Business* (Dec. 2002) 19–117.

[70] The EIA approves the use of the name ''NEMS'' to describe only an *AEO* version of the model without any modification to code or data. Because the present analysis entails some minor code modifications and runs the model under various policy scenarios that deviate from *AEO* assumptions, the name ''NEMS–BT'' refers to the model as used here. (''BT'' stands for DOE's Building Technologies Program.) For more information on NEMS, refer to *The National Energy Modeling System: An Overview*, DOE/EIA–0581 (98) (Feb. 1998) (available at: *http://tonto.eia.doe.gov/FTPROOT/forecasting/058198.pdf).*

in the United States (with significant variances among States), it does not seem appropriate to attempt to measure impacts on infrastructure costs and prices where there is likely to be significant overlap.

J. Environmental Analysis

DOE has prepared a draft environmental assessment (EA) pursuant to the National Environmental Policy Act and the requirements of 42 U.S.C. 6295(o)(2)(B)(i)(VI) and 6316(a), to determine the environmental impacts of the proposed amended standards. Specifically, DOE estimated the reduction in power sector emissions of carbon dioxide (CO_2) using the NEMS–BT computer model. DOE calculated a range of estimates for reduction in oxides of nitrogen (NO_X) emissions and mercury (Hg) emissions using current power sector emission rates. However, the Environmental Assessment (see the Environmental Assessment report of the TSD accompanying this notice) does not include the estimated reduction in power sector impacts of sulfur dioxide (SO_2), because DOE has determined that due to the presence of nationals caps on SO_2 emissions as addressed below, any such reduction resulting from an energy conservation standard would not affect the overall level of SO_2 emissions in the United States.

The NEMS–BT is run similarly to the *AEO2008* NEMS, except the energy use is reduced by the amount of energy saved due to the TSLs. DOE obtained the inputs of national energy savings from the NIA spreadsheet model. For the Environmental Assessment, the output is the forecasted physical emissions. The net benefit of the standard is the difference between emissions estimated by NEMS–BT and the *AEO2008* Reference Case. The NEMS–BT tracks CO_2 emissions using a detailed module that provides results with a broad coverage of all sectors and inclusion of interactive effects.

The Clean Air Act Amendments of 1990 set an emissions cap on SO_2 for all power generation. The attainment of this target, however, is flexible among generators and is enforced through the use of emissions allowances and tradable permits. Because SO_2 emissions allowances have value, they will almost certainly be used by generators, although not necessarily immediately or in the same year with and without a standard in place. In other words, with or without a standard, total cumulative SO_2 emissions will always be at or near the ceiling, while there may be some timing differences between year-by-year forecast. Thus, it is unlikely that there will be an SO_2 environmental benefit from electricity savings as long as there is enforcement of the emissions ceilings.

Although there may not be an actual reduction in SO_2 emissions from electricity savings, there still may be an economic benefit from reduced demand for SO_2 emission allowances. Electricity savings decrease the generation of SO_2 emissions from power production, which can decrease the need to purchase or generate SO_2 emissions allowance credits, and decrease the costs of complying with regulatory caps on emissions.

Like SO_2, future emissions of NO_X and Hg would have been subject to emissions caps under the Clean Air Interstate Act (CAIR) and Clean Air Mercury Rule (CAMR). As discussed later in section VI.B.6, these rules have been vacated by a Federal court. But the NEMS–BT model used for today's final rule assumed that both NO_X and Hg emissions would be subject to CAIR and CAMR emissions caps. In the case of NO_X emissions, CAIR would have permanently capped emissions in 28 eastern States and the District of Columbia. Because the NEMS–BT modeling assumed NO_X emissions would be subject to CAIR, DOE established a range of NO_X reductions based on the use of a NO_X low and high emissions rates (in metric kilotons (kt) of NO_X emitted per terawatt-hours (TWh) of electricity generated) derived from the *AEO2008*. To estimate the reduction in NO_X emissions, DOE multiplied these emission rates by the reduction in electricity generation due to the standards considered. For mercury, because the emissions caps specified by CAMR would have applied to the entire country, DOE was unable to use NEMS–BT model to estimate the physical quantity changes in mercury emissions due to energy conservation standards. To estimate mercury emission reductions due to standards, DOE used an Hg emission rate (in metric tons of Hg per energy produced) based on *AEO2008*. Because virtually all mercury emitted from electricity generation is from coal-fired power plants, DOE based the emission rate on the metric tons of mercury emitted per TWh of coal-generated electricity. To estimate the reduction in mercury emissions, DOE multiplied the emission rate by the reduction in coal-generated electricity associated with standards considered.

DOE received comments from stakeholders on the valuation of CO_2 emissions savings that result from standards. The Joint Comment stated that by not placing an economic value on the benefits from reduced CO_2 emissions, DOE makes it difficult to weigh these benefits in comparison to other benefits and costs resulting from a given standard level. Implicitly, the Joint Comment argued that DOE is arbitrarily valuing pollution reductions at $0. The best way to avoid this mistake would be to estimate an economic value for pollutant reductions. According to the Joint Comment, voluminous work, both from academia and the business world, exists on the range of potential carbon prices under various regulatory scenarios. (Joint Comment, No. 23 at pp. 19–20). NEMA also suggested a CBO report as a potential starting point. (NEMA, No. 22 at p. 34) DOE has made several additions to its monetization of environmental emissions reductions in today's proposed rule, which are discussed in section 0, but has chosen to continue to report these benefits separately from the net benefits of energy savings. Nothing in EPCA, nor in the National Environmental Policy Act, requires that the economic value of emissions reduction be incorporated in the net present value analysis of the value of energy savings. Unlike energy savings, the economic value of emissions reduction is not priced in the marketplace.

VI. Analytical Results

A. Trial Standard Levels

DOE analyzed the costs and benefits of many TSLs for the GSFL and IRL covered in today's proposed rule. Table VI.2 and Table VI.4 present the TSLs and the corresponding product class efficiencies for GSFL and IRL. See the engineering analysis in section V.C of this NOPR for a more detailed discussion of the efficacy levels.

In this section, DOE is only presenting the analytical results for the TSLs of the product classes that DOE analyzed directly (the ''representative product classes''). DOE scaled the standards for these representative product classes to create standards for other product classes that were not directly analyzed (such as modified-spectrum lamps), as set forth in chapter 5 of the TSD.

The Joint Comment stated that DOE should use separate TSLs for GSFL and IRL. The Joint Comment also stated that the sets of CSLs in the ANOPR should be made into a single set of TSLs, without further regrouping. (Joint Comment, No. 23 at p. 18) In the NOPR, DOE has generally followed the methodology suggested by the Joint Comment. In this notice, DOE did not group GSFL with IRL. For example, each GSFL TSL reflects a set of efficacy levels across all products classes only within GSFL. DOE believes that this approach is appropriate because GSFL

and IRL, though often produced by the same manufacturers, frequently serve different lighting applications, so energy conservation standards for one lamp type are not likely to affect the market or energy consumption of the other lamp type. The following sections describe the TSLs and corresponding efficacy levels.

1. General Service Fluorescent Lamps

DOE developed product classes for GSFL based on the utility of the covered lamps and how they are used in the market. DOE observed that 4-foot medium bipin lamps constitute the vast majority of GSFL sales. These lamps are followed in order of unit sales by 8-foot single pin slimline lamps and 8-foot recessed double contact high output lamps. Because 4-foot medium bipin, 8-foot single pin slimline, and 8-foot recessed double contact HO lamps are the most common GSFL, DOE selected them as representative lamps for its analysis. Lamps with a CCT greater than 4,500K comprise a small share of the GSFL market. Therefore, DOE chose to analyze lamps with a CCT less than or equal to 4,500K. For the NOPR, DOE also chose to analyze 4-foot miniature bipin T5 standard output (SO) and HO lamps with a CCT less than or equal to 4,500K. (DOE did not analyze T5 lamps in the March 2008 ANOPR.)

The following lamps with a CCT less than 4,500K compose the five representative product classes: (1) 4-foot medium bipin; (2) 8-foot single pin slimline; (3) 8-foot recessed double contact HO lamps; (4) 4-foot miniature bipin T5 SO; and (5) 4-foot miniature bipin T5 HO lamps. Standards for other product classes were established by scaling the standards developed for these representative product classes. All 12 GSFL classes are shown in Table VI.1.

TABLE VI.1—GSFL PRODUCT CLASSES

GSFL lamp type	CCT
4-Foot Medium Bipin.	≤ 4,500K (representative).
	> 4,500K.
2-Foot U-Shaped.	≤ 4,500K.
	> 4,500K.
8-Foot Single Pin Slimline.	≤ 4,500K (representative).
	> 4,500K.
8-Foot RDC HO	≤ 4,500K (representative).
	> 4,500K.
4-Foot T5 SO ...	≤ 4,500K (representative).
	> 4,500K.
4-Foot T5 HO ..	≤ 4,500K (representative).
	> 4,500K.

DOE developed TSLs that generally follow a trend of increasing efficacy by using higher-quality phosphors. The TSLs also represent a general move from higher-wattage technologies to lower-wattage, lower-diameter lamps with higher efficacies. Table VI.2 shows the TSLs for GSFL. Each TSL is generally composed of the efficacy level of the same number across all product classes. That is, TSL1 is composed of EL1 for all classes, TSL2 is composed of EL2, etc. For T5 standard output lamps, however, DOE selected EL1 for all TSLs except TSL5, to which DOE assigned EL2 (the maximum technologically feasible efficacy level for T5 SO lamps). For T5 high output lamps, DOE selected EL1 for all TSLs because it is the maximum efficacy for this lamp type. With the methodology, TSL5 represents all maximum technologically feasible GSFL efficacy levels for this NOPR.

The efficacy levels for the five representative product classes are shown in Table VI.2; Efficiency levels for all product classes in the TSLs can be found in the NOPR TSD chapter 5. DOE analyzes systems that meet each efficacy level in the TSLs by pairing standard and reduced-wattage lamps featuring a variety of design options with appropriate magnetic or electronic ballasts. As discussed in the screening analysis (NOPR TSD chapter 4), DOE uses design options with highly emissive electrode coatings, higher efficiency lamp fill gas composition, higher efficiency phosphors, glass coatings, or lamp diameter to achieve higher efficacy levels.

TABLE VI.2—TRIAL STANDARD LEVELS FOR GSFL—EFFICIENCY LEVELS FOR THE FIVE REPRESENTATIVE GSFL PRODUCT CLASSES

Representative product class	Trial standard level (lm/w)					
	EPCA standard *	TSL1	TSL2	TSL3	TSL4	TSL5
4-Foot Medium Bipin, CCT ≤ 4,500K	75.0	78	81	84	89	94
8-Foot Single Pin Slimline, CCT ≤ 4,500K	80.0	89	93	95	97	100
8-Foot RDC HO, CCT ≤ 4,500K	80.0	83	87	88	92	95
4-Foot Miniature Bipin T5 SO, CCT ≤ 4,500K	[None]	103	103	103	103	108
4-Foot Miniature Bipin T5 HO, CCT ≤ 4,500K	[None]	89	89	89	89	89

* 42 U.S.C. 6295(i)(1)(B). Applies to GSFL as defined by EPCA.

TSL1, which would set energy conservation standards for GSFL to EL1 for all product classes, would eliminate the 4-foot medium bipin T12 baselines, the 95W T12 8-foot recessed double contact HO baseline, and the 75W T12 8-foot single pin slimline baseline from the market. In the 4-foot medium bipin product class, this TSL could be met either with a 40W T12 lamp using improved 700-series or 800-series phosphors, or with a 34W T12 lamp using a 700-series phosphor. At this TSL, 4-foot medium bipin lamps using only halophosphors would not be able to meet this TSL. The 75W 8-foot single pin slimline T12 and 110W recessed double contact HO lamps would need to use an 800-series rare earth phosphor to meet TSL1. TSL1 also represents a level which would likely prevent the commercialization of T5 lamps with halophosphor coatings while allowing for 800-series 4-foot T5 miniature bipin and 4-foot T5 miniature bipin HO lamps that are currently commercially available to remain on the market.

TSL2 would set energy conservation standards for GSFL at EL2 for 4-foot MBP, 8-foot SP slimline, and 8-foot RDC HO lamps. The 34W T12 4-foot medium bipin lamps would likely be required to use 800-series rare earth phosphors to meet TSL2. For 40W T12 lamps, TSL2 is expected to require a premium 800-series rare earth phosphor and is the maximum TSL that a 40W T12 would be able meet. In the 8-foot single pin slimline product class, TSL2 is expected to require a premium 800-series rare earth phosphor for the 75W T12 and is the maximum TSL that 75W T12 would likely be able to meet. This standard level would eliminate the 60W T12 baseline and require a 700-series phosphor for this lamp. In the 8-foot recessed double contact HO product class, TSL2 would eliminate 110W T12

lamps and the 95W T12 baseline and would require rare earth 700-series phosphors for 95W T12 lamps. For T5s, TSL2 still represents the first efficacy level, which would allow for 800-series 4-foot T5 miniature bipin and 4-foot T5 miniature bipin HO lamps to remain on the market.

TSL3 would set energy conservation standards for GSFL at EL3 for 4-foot MBP, 8-foot SP slimline, and 8-foot RDC HO lamps. In this product class, the 32W T8 baseline would be eliminated from the market, and to produce a TSL3-compliant 32W T8 lamp, manufacturers would need to use an 800-series rare earth phosphor. The 34W T12 lamps would likely require an improved 800-series rare earth phosphor mixture and possibly other design options, such as a different gas fill or increased thickness of the bulb-wall phosphor. Only reduced-wattage (34W) 4-foot medium bipin T12 lamps are expected to meet this TSL. In the 8-foot single pin slimline product class, TSL3 would require the use of an 800-series 60W T12 lamp. This standard level is expected to eliminate all 75W T12 lamps and to require an improved 700-series phosphor for the 60W T12. In the 8-foot recessed double contact HO class, TSL3 requires 95W T12 lamps to shift to 800-series rare earth phosphors. TSL3 also represents the first efficacy level for 4-foot T5 miniature bipin and 4-foot T5 miniature bipin HO lamps, retaining 800-series versions of those lamps on the market.

TSL4, which would set energy conservation standards for GSFL at EL4 for 4-foot MBP, 8-foot SP slimline, and 8-foot RDC HO, would be expected to eliminate 4,100K T12 lamps from the marketplace. TSL4 would also be expected to raise the efficacy of all full-wattage T8 lamps above the baselines for the aforementioned product classes. In the 4-foot medium bipin product class, TSL4 could be met by improved 800-series full-wattage T8 lamps, or by 800-series 30W and 25W T8 lamps. For the 8-foot SP slimline product class, 59W T8 lamps would likely need to use an 800-series rare earth phosphor to meet TSL4. TSL4, while expected to eliminate 8-foot T12 RDC HO lamps from the market, would require an improved 700-series mixture to be used in T8 lamps for this product class. TSL4 also represents the first efficacy level for 4-foot T5 miniature bipin and 4-foot T5 miniature bipin HO lamps, retaining 800-series T5 lamps on the market.

TSL5 represents the max-tech EL for all GSFL product classes. T12 lamps and 700-series T8 lamps are expected to not be able to meet this level. In the 4-foot medium bipin and 8-foot single pin slimline product class, T8 lamps would need to have a premium 800-series rare earth phosphor coating to meet TSL5. TSL5 could also be met by the 28W reduced-wattage 4-foot medium bipin T8 lamp and the 57W and 55W reduced-wattage 8-foot single pin slimline T8 lamps. TSL5 would require movement 800-series T8 lamps in the 8-foot recessed double contact HO product class. For the 4-foot T5 MiniBP SO product class, a standard-wattage (28W) and reduced-wattage (26W) T5 with an improved 800-series phosphor would need to be used in order to meet TSL5. Because DOE created only one efficacy level for the 4-foot T5 miniature bipin HO lamps, TSL5 would set energy conservation standards for 4-foot T5 MiniBP HO lamps at EL1 and allow 800-series T5 HO lamps to remain on the market. For more information on the TSLs for GSFL, see chapter 9 of the TSD.

2. Incandescent Reflector Lamps

As discussed in section V.C, for IRL, DOE has established five efficacy levels based on an equation relating efficacy (in lumens per watt) to lamp wattage. Also discussed in section V.C, DOE has analyzed only one representative product class and intends to scale minimum efficacy requirements to other product classes. All IRL classes are listed in Table VI.3. As seen in the table, DOE only directly analyzed the standard-spectrum IRL with a diameter greater than 2.5 inches and voltage less than 125 volts.

TABLE VI.3—IRL PRODUCT CLASSES

Lamp type	Diameter	Voltage
Standard Spectrum	> 2.5 inches	≥ 125
		> 125 (representative).
	≤ 2.5 inches	≥ 125.
		< 125.
Modified Spectrum	> 2.5 inches	≥ 125.
		< 125.
	≤ 2.5 inches	≥ 125.
		< 125.

In establishing TSLs for IRL, in this NOPR, DOE analyzes five TSLs, each one corresponding to one efficacy level. For example, TSL1 corresponds to EL1 and TSL5 corresponds to EL5. TSL1 could be achieved with an improved halogen lamp that uses xenon, a higher-efficiency inert fill gas. TSL2 could be achieved with a standard halogen infrared lamp with a lifetime of 6,000 hours or a halogen lamp with an improved reflector, such as silver. TSL3 could be met with a 3,000-hour-lifetime standard halogen infrared lamp. TSL4 could be met with a 4,000-hour-lifetime improved halogen infrared lamp. Improvements in the halogen infrared lamp may include the use of a double-ended halogen infrared burner, higher-efficiency inert fill gas, or more-efficient filament orientation. Finally, TSL5 could be achieved with a 4,200-hour-lifetime halogen infrared lamp (even further improved). These further improvements include an improved reflector, improved IR coating, or filament design that produces higher temperature operation (and may reduce lifetime to 3,000 hours).

The efficacy levels for the representative analyzed product class are shown in Table VI.4 for the TSLs to which they correspond. The efficacy levels for this representative product class were then scaled to create the efficacy levels for the seven other IRL product classes as described in section V.C.7.b of this notice. For more information on efficacy standard levels for the other seven product classes, see chapter 5 of the TSD.

TABLE VI.4—TRIAL STANDARD LEVELS FOR IRL—EFFICIENCY LEVELS FOR THE STANDARD SPECTRUM, DIAMETER > 2.5 INCHES, VOLTAGE < 125 IRL PRODUCT CLASS

	Trial standard level (lm/W)*				
EPCA standard**	TSL1	TSL2	TSL3	TSL4	TSL5
10.5 (40–50 Watts) 11.0 (51–66 Watts) 12.5 (67–85 Watts) 14.0 (86–115 Watts) 14.5 (116–155 Watts) 15.0 (156–205 Watts)	$4.6P^{0.27}$	$4.8P^{0.27}$	$5.5P^{0.27}$	$6.2P^{0.27}$	$6.9P^{0.27}$

* P is the rated wattage of the lamp.
** 42 U.S.C. 6295(i)(1)(B). Applies to IRL as defined by EPCA.

B. Economic Justification and Energy Savings

The following section discusses the results of the analyses discussed in section 0. Section VI.C contains further discussion regarding DOE's consideration of these results in the selection of proposed standards levels.

1. Economic Impacts on Consumers

a. Life-Cycle Cost and Payback Period

DOE calculated the average LCC savings relative to the baseline for each product class, as in the March 2008 ANOPR. 73 FR 13620, 13665 (March 13, 2008). A new standard would affect different lamp consumers differently, depending on the market segment to which they belong. DOE designs the LCC analysis around lamp purchasing events, in order to characterize the circumstances under which consumers need to replace a lamp. The LCC spreadsheet calculates the LCC impacts for each lamp replacement event separately. Examining the impacts on each event separately allows DOE to view the results of many subgroup populations in the LCC analyses.

For the NOPR, as in the March 2008 ANOPR, DOE decided not to aggregate the results of the various event scenarios together into a single LCC at each efficacy level. 73 FR 13620, 13655 (March 13, 2008). To do so would have required too many assumptions, such as the relative occurrence of each event over time, and the market share of each lamp in the base case and each standards case. DOE believes it is more appropriate to incorporate assumptions about consumer decisions and long-term market trends in the NIA, and leave the LCC as a direct head-to-head comparison between lamp and lamp-and-ballast designs under different events. Further, the LCC savings results help DOE estimate consumer behavior decisions for the NIA.

DOE recognizes that the large number of LCC and PBP results can make it difficult to draw conclusions about the cost-effectiveness of efficacy standards. The following discussion presents salient results from the LCC analysis. The LCC results are presented according to the lamp purchasing events that culminate in purchase of lamp-and-ballast designs. These results reflect a subset of all of the possible events, although they represent the most prevalent purchasing events.[71] The analysis provides a range of LCC savings for each efficacy level. The range reflects the results of multiple systems (*i.e.*, multiple lamp-ballast pairings) that consumers could purchase to meet an efficacy level.

In addition, DOE has chosen not to present detailed PBP results by efficacy level in this NOPR because DOE believes that LCC results are a better measure of cost-effectiveness. However, a full set of both LCC and PBP results for the systems DOE analyzed are available in chapter 8 and appendix 8B of the TSD. All the LCC results shown here were generated using *AEO2008* reference case electricity prices and medium-range lamp and ballast prices.

i. General Service Fluorescent Lamps

Table VI.5 through Table VI.11 present the results for the baseline lamps in each of the four product classes DOE analyzed (*i.e.*, 4-foot medium bipin, 4-foot miniature bipin SO, 4-foot miniature bipin HO, 8-foot single pin slimline, and 8-foot recessed double contact HO). When a standard results in ''positive LCC savings,'' the life cycle cost of the standards-compliant lamp is less than the life cycle cost of the baseline lamp, and the consumer benefits. When a standard results in ''negative LCC savings,'' the life cycle cost of the standards-compliant lamp is higher than the life cycle cost of the baseline lamp, and the consumer is adversely affected. The range of values represents the multiple ways a consumer can meet a certain efficacy standard under each lamp purchasing event. For example, at EL3, a consumer retrofitting a 4-foot 34W T12 medium bipin baseline system can either purchase a high-efficacy T12 lamp on an electronic ballast or a high-efficacy T8 lamp on an electronic ballast. While consumers have both choices, selecting a T8 system offers positive LCC savings.

Not all baselines have suitable replacement options for every lamp purchasing event at every efficacy level. For instance, because DOE assumed that consumers wish to purchase systems or lamp replacements with a lumen output within 10 percent of their baseline system output, in some cases, the only available replacement options produce less light than this. Thus, the replacement options are considered unsuitable substitutions. These cases are marked with ''LL'' (less light) in the LCC results tables below. In some cases, when consumers who currently own a T12 system need to replace their lamps, no T12 energy saving lamp replacements are available. In these cases, in order to save energy, the consumers must switch to other options, such as a T8 lamp and appropriate ballast. These cases are marked with ''NER'' (no energy-saving replacement) in tables.

Because some baseline lamps already meet higher efficacy levels (e.g., the baseline 32W 4-foot T8 MBP lamp achieves EL2), LCC savings at the levels below the baseline are zero. In these cases, ''BAE'' (baseline above efficacy level) is listed in the tables to indicate that the consumer makes the same purchase decision in the standards-case as they do in the base-case. Also, not all lamp purchase events apply for all baseline lamps or efficacy levels. For example, DOE assumed that the standards-induced retrofit event does not apply to the 32W T8 system, because it is already the most

[71] In many cases, DOE omitted events I(b) and IV in this notice, because DOE believes these lamp purchase events to be relatively less frequent. However, DOE did present all analyzed events in chapter 8 of the TSD.

efficacious 4-foot medium bipin GSFL system. For these events, an ''EN/A'' (event not applicable) exists in the table. Finally, because LCC savings are not relevant when no energy conservation standard is established, ''N/A'' (not applicable) exists in the LCC savings column for the baseline system.

DOE is also presenting the installed prices of the lamp-and-ballast systems in order to compare the up-front costs that consumers must bear when purchasing baseline or standards-case systems. The installed price results for a lamp replacement in response to a lamp failure event (Event IA) only include the lamp purchase price and lamps installation costs. For 4-foot MBP, 8-foot SP slimline, and 8-foot RDC HO, at EL1 through EL3, consumers with T12 systems would have the option of purchasing a T12 lamp in the face of a lamp failure. At EL4 and EL5, because no T12 lamps are standard-compliant, consumers would not be able to proceed with a lamp replacement; therefore, no installed price increases are shown.

Instead, at EL4 and EL5, consumers with T12 lamps that either fail at the beginning of the analysis period (Event IB: Lamp Failure, Lamp and Ballast Replacement) or fail in the middle of the analysis period (Event II: Standards-Induced Retrofit) would need to purchase a new lamp-and-ballast T8 system. In these situations, the installed price in the baseline includes the cost of purchasing replacement lamps, whereas the installed price at EL4 and EL5 is much greater, because the consumer would need to purchase and install a T8 lamp-and-ballast system.

The ballast failure event (Event III) and the new construction/renovation event (Event IV) include the purchase and installation costs for lamps and a ballast for the baseline and standards-case systems. This is because the occurrences of these events require the purchase of new lamps and ballasts in all cases. Although in most cases standards-case lamp-and-ballast systems are generally more expensive than baseline lamp-and-ballast systems, in some cases (primarily for owners of the T12 baseline systems purchasing a T8 system instead), the standards-case lamp-and-ballast systems are less expensive than the baseline systems.

Table VI.5 presents the findings of an LCC analysis on various 3-lamp 4-foot medium bipin GSFL systems operating in the commercial sector. The analysis period (based on the longest-lived baseline lamp's lifetime) for this product class in the commercial sector is 5.5 years. As seen in the table, DOE analyzes three baseline lamps: (1) 40W T12; (2) 34W T12; and (3) 32W T8.

For the 40W T12 baseline, when commercial consumers are confronted with a lamp failure in the base case, they purchase the 40W T12 baseline lamp as a lamp replacement on their magnetic T12 ballast. In general, the only energy-saving lamp replacement option for this system is a 34W T12 lamp. However, as seen in Table VI.5, the EL1 and EL2 34W T12 lamps do not produce sufficient light compared to the baseline lumen output. Therefore, for the purposes of the LCC analysis, DOE assumes that at these ELs, 40W T12 consumers would purchase the EL3 34W T12 lamp (which has sufficient lumen output) in response to a lamp failure, and achieve positive LCC savings. Because no T12 lamps would be standards-compliant at EL4 and EL5, consumers with T12 ballasts who are confronted with a lamp failure beyond EL3 would be forced to retrofit their ballasts and instead purchase a T8 system. The LCC savings and incremental costs related to this action can be seen in Table VI.5 under the standards induced retrofit event. At EL4 and EL5, consumers who are forced to retrofit their ballast would achieve positive LCC savings; however, they would also incur an incremental installed price (baseline installed price minus standards-case installed price) greater than $49.30 per system. In particular, 40W T12 consumers who retrofit would obtain the greatest LCC savings at EL4 and EL5 by retrofitting to an electronically-ballasted 32W T8 system.

For the 40W T12 baseline, when commercial consumers are confronted with a ballast failure in the base case, they purchase the 40W T12 baseline lamps and a 0.88 ballast factor electronic ballast. In order to save energy with similar lumen output at EL1 and EL2, consumers would purchase a higher-efficacy 40W T12 with a lower-BF ballast. As seen in Table VI.5, these choices result in negative LCC savings. However, under such a standard, 40W T12 consumers would be able to achieve positive LCC savings under a ballast failure scenario by purchasing systems at EL4 and EL5. Similar to the standards-induced retrofit, at EL4 and EL5 consumers are forced to purchase T8 systems. Those who purchase a 32W T8 lamp generally achieve the highest LCC savings.

For the 34W T12 baseline, when commercial consumers are confronted with a lamp failure in the base case, they purchase the 34W T12 baseline lamp as a lamp replacement on their magnetic T12 ballast. As this is the lowest-wattage commercially-available T12 lamp, there are no energy-saving lamp replacement options for this system. However, as seen in Table VI.5 in the Event IA installed price column, consumers do have the option to purchase a higher-efficacy 34W T12 lamps, resulting in no energy-savings and an installed price increase ranging from $3.69 to $13.91. For the purposes of the LCC analysis, at EL1, EL2, and EL3, DOE analyzes the economics of standards-retrofit, an energy-saving response available to the 34W T12 consumer under a lamp failure scenario. As seen in the table, some LCC savings results at EL1, EL2, and EL3 are negative, representing consumers retrofitting to a 34W T12 lamp on an electronic T12 ballast or the baseline 32W T8 lamp on an electronic T8 ballast. However, under such a standard, consumers would also be able to achieve positive savings by purchasing EL3, EL4, and EL5 T8 systems with either a higher-efficacy 32W T8 lamp or other reduced-wattage lamps. Because no T12 lamps would be standards-compliant at EL4 and EL5, consumers with T12 ballasts who are confronted with a lamp failure at these levels would be forced to retrofit their ballasts and instead purchase a T8 system. The incremental installed prices associated with this forced retrofit are greater than $51.62 per system.

For the 34W T12 baseline, when commercial consumers are confronted with a ballast failure in the base case, they purchase the 34W T12 baseline lamps and a 0.88 ballast factor electronic ballast. In order to save energy with similar lumen output at EL1 and EL2, consumers would purchase a higher-efficacy 34W T12 with a lower-BF ballast. In addition, at EL3, consumers may purchase a 34W T12 lamp with a lower-BF ballast as well. As seen in Table VI.5, these choices result in negative LCC savings. However, under such a standard, 34W T12 consumers can achieve positive LCC savings under a ballast failure scenario by purchasing systems at EL4 and EL5. Similar to the standards-induced retrofit, at EL4 and EL5, consumers would be forced to purchase T8 systems. Those who purchase the reduced-wattage 25W and 28W T8 lamps achieve the highest LCC savings.

For the 32W T8 baseline, commercial consumers purchase either the 32W T8 baseline lamp (under lamp failure) or the 32W T8 baseline lamp and an electronic 0.88 BF ballast (under ballast failure). As the efficacy of this baseline lamp exceeds EL2, no LCC results or installed prices are presented for EL1 and EL2. In order to save energy by only replacing the lamp, the consumer must purchase reduced wattage lamps (these

only lie at EL4 and EL5). Therefore, although there are no EL3 energy-saving lamp replacements, consumers may purchase EL4 and EL5 lamps at this standard level. At EL4, consumers who purchase 30W T8 lamps achieve lower LCC savings than those who purchase 25W T8 lamps. At EL5, the only reduced-wattage lamp replacement option (the 28W T8) achieves positive LCC savings.

When confronted with a ballast failure, consumers who would have purchased the 32W T8 baseline system, would achieve positive LCC savings at EL3 by purchasing higher-efficacy 32W T8 lamps on a lower-BF ballast. At EL4, these consumers could obtain the greater LCC savings by purchasing an electronically-ballasted 25W T8 system on a 0.88 BF ballast. At EL5, they achieve highest savings by purchasing the 32W T8 lamp on a lower-BF ballast.

BILLING CODE 6450–01–P

Table VI.5 LCC Results for a 3-Lamp Four-Foot Medium Bipin GSFL System Operating in the Commercial Sector

Baseline	Efficiency Level	LCC Savings 2007$			Installed Price 2007$		
		Event IA: Lamp Replacement*	Event II: Standards-Induced Retrofit (Lamp and Ballast Replacement)*	Event III: Ballast Failure*†	Event IA: Lamp Replacement	Event II: Standards-Induced Retrofit (Lamp and Ballast Replacement)	Event III: Ballast Failure†
40 Watt T12	Base-line	N/A	N/A	N/A	13.96	13.96	65.89
	EL1	LL	EN/A	-7.34 to -5.63	LL	EN/A	72.51 to 77.16
	EL2	LL	EN/A	-7.60	LL	EN/A	77.45
	EL3	22.27	EN/A	13.08 to 15.01	25.13	EN/A	68.21 to 77.06
	EL4	NR	14.30 to 26.65	22.12 to 34.47	NR	63.26 to 75.56	60.96 to 73.25
	EL5	NR	21.04 to 25.26	28.85 to 33.08	NR	64.83 to 71.19	62.52 to 68.89
34 Watt T12	Base-line	N/A	N/A	N/A	11.22	11.22	63.15
	EL1	NER	-17.51	-1.72	14.91	69.15	66.84
	EL2	NER	-22.56 to -3.67	-8.74 to 10.15	21.94	59.74 to 76.18	57.43 to 73.87
	EL3	NER	-22.83 to 6.09	-9.01 to 19.91	25.13	62.84 to 79.37	60.53 to 77.06
	EL4	NR	11.37 to 22.33	25.20 to 36.15	NR	63.26 to 67.88	60.96 to 65.57
	EL5	NR	15.13 to 18.22	28.95 to 32.04	NR	63.51 to 64.83	61.20 to 62.52
32 Watt T8	Base-line	N/A	N/A	N/A	11.97	11.97	57.43
	EL1	BAE	EN/A	BAE	BAE	EN/A	BAE
	EL2	BAE	EN/A	BAE	BAE	EN/A	BAE
	EL3	NER	EN/A	9.76	NER	EN/A	60.53
	EL4	4.89 to 25.99	EN/A	15.04 to 25.99	16.35 to 20.11	EN/A	60.96 to 65.57
	EL5	10.69	EN/A	10.69 to 13.65	15.74	EN/A	61.20 to 62.52

†For 32 Watt T8 baseline, includes Event V (New Construction and Renovation).
*Analysis period is 5.5 years.
N/A: Not Applicable; NER: No Energy-Saving Replacement; LL: Available Options Produce Less Light; EN/A: Event Not Applicable; BAE: Baseline Above Efficiency Level; NR: No Replacement

BILLING CODE 6450–01–C

As discussed in section V.D, DOE performed research on the usage of GSFL in the residential sector and found a number of variations from the commercial sector. In particular, DOE uses separate electricity prices (higher than commercial), operating hours (lower than commercial), discount rates (higher than commercial), and lamp lifetimes (higher than commercial). DOE also assumes that residential consumers of GSFL generally install their own lamps; thus, labor costs were modeled only for ballast replacements. DOE also uses a 40W T12 baseline lamp that has a lower efficacy, lower price, and shorter lifetime (in hours). DOE found that the most common ballast in the residential sector is a low-power-factor, 2-lamp magnetic rapid-start T12 ballast with a ballast factor of 0.68. Therefore, DOE uses the combination of the magnetic T12 ballast and two 40W T12 lamps as the residential sector GSFL baseline lamp-and-ballast system.

Based on DOE's analysis, the average operating hours for GSFL in the residential sector are 789 hours per year, which is lower than the commercial sector average of 3,435 annual operating hours. This would suggest a 19-year service life for the baseline lamp, which has a lifetime of 15,000 hours. Based on measured-life reports, DOE uses a 15-year average ballast and fixture lifetime in the residential sector. Under these assumptions, lamps used under average residential operating hours would not fail before the fixture reached the end of its life; thus, there would be no lamp-only replacements, but there would be lamp-and-ballast replacements in the residential sector. However, with higher operating hours, lamp service life does decrease below 15 years, resulting in a lamp failure event prior to ballast or fixture replacement. Because DOE believes that the lamp failure event is an important event to analyze, DOE has presented the residential sector LCC analysis under both average operating hours (789 hours per year) and high operating hours (1,210 hours per year). The high operating hours are typical of kitchens, living rooms, dining rooms, and outdoor spaces.

Table VI.7 presents the LCC results for a 4-foot medium bipin system operating in the residential sector under average operating hours. As discussed earlier, under average operating hours, only the ballast failure event (Event III) applies because the ballast and fixture reach the end of their 15 year life before the baseline lamp (which would otherwise have a lifetime of 19 years when operated for 789 hours per year) fails. DOE uses a 15-year analysis period, based on the effective service life of the lamp (limited by the fixture or ballast life). Because DOE assumes that the residential consumer discards the lamp when replacing a ballast or fixture, DOE does not assign any residual value to the remaining life of the lamp at the end of the analysis period. In this event, residential consumers purchase the 40W T12 baseline lamp with a magnetic T12 system in the base case, and an electronic or magnetic T12 system or electronic T8 system in the standards case.

At EL1 and EL2, although consumers may purchase an EL1 or EL2 T12 lamp with a magnetic ballast, none of these systems are both energy saving and produce similar lumen output at the baseline system. Therefore at EL1 and EL2, the only T12 systems analyzed are those purchased with electronic T12 ballasts. At EL1, as seen in Table VI.6, higher LCC savings occur for consumers purchasing 34W T12 lamps than those purchasing 40W T12 lamps. When purchasing at EL2, consumers have the option of either purchasing an electronically-ballasted T12 system or a T8 system with the lowest efficacy 32W T8 lamp. LCC savings are the least when a consumer purchases a higher-efficacy 40W T12 lamp with an electronic T12 ballast. Consumers purchasing 32W T8 lamps on an electronic ballast would obtain the greatest savings at EL2. At EL3, in addition to the T8 and electronically-ballasted T12 purchase options, consumers also can obtain energy savings and similar lumen output by purchasing 34W T12 lamps on magnetic T12 ballasts. However, as seen in the Table VI.6, this option results in the least savings of all ELs. Consumers achieve higher LCC savings by purchasing EL3 32W T8 lamps with electronic ballasts. As discussed in relation to the commercial sector, EL4 and EL5 eliminate T12 lamps from the market and require the purchasing of a T8 system. Those consumers who select a 32W T8 lamp on an electronic ballast obtain the least LCC savings at EL4, while LCC savings are greatest of all ELs when a consumer purchases an electronically-ballasted 25W T8 system. At EL5, consumers choosing a 32W T8 system obtain lower LCC savings than those purchasing a 28W T8 system.

TABLE VI.6—LCC RESULTS FOR A 2-LAMP FOUR-FOOT MEDIUM BIPIN GSFL SYSTEM OPERATING IN THE RESIDENTIAL SECTOR WITH AVERAGE OPERATING HOURS

Baseline	Efficiency level	LCC savings 2007$	Installed price 2007$
		Event III: Ballast failure*	Event III: Ballast failure
40 Watt T12	Baseline	N/A	49.47.
	EL1	5.87 to 9.24	47.22 to 54.10.
	EL2	5.67 to 16.88	48.64 to 54.29.
	EL3	0.27 to 16.63	50.71 to 57.95.
	EL4	16.34 to 21.24	50.99 to 54.07.
	EL5	17.72 to 19.66	51.16 to 52.03.

* Analysis period is 15 years.
N/A: Not Applicable.

In addition to conducting the LCC analysis under average operating hours, DOE also computed residential LCC results under high operating hours (1,210 hours per year) in order to analyze the economic impacts of the lamp failure event (Event I). Table VI.7 presents these LCC and installed-price results for a 2-lamp four-foot medium bipin GSFL system under the lamp failure event and high operating hours.

As seen in Table VI.7, DOE divides the residential GSFL lamp failure event into Events IA (Lamp Failure: Lamp Replacement) and IB (Lamp Failure: Lamp and Ballast Replacement). Event IA, presented also in the commercial sector analysis, models solely a lamp purchase (in response to lamp failure) in both the base case and standards case.

With high operating hours, DOE calculates that the baseline lamp initially purchased with a ballast fails after 12.5 years. Therefore, a replacement lamp will operate for only 2.5 additional years before the entire lamp-and-ballast system is discarded (due to either ballast failure or fixture replacement). Therefore, for this high operating hour scenario's lamp failure event calculation, DOE uses a 2.5 year analysis period. Similar to the average operating hour analysis, when a lamp-and-ballast system is discarded, DOE does not attribute any residual value to the remaining life of the lamp.

Similar to the commercial analysis, the only viable energy-saving lamp replacement option for the 40W T12 residential system is the 34W T12 lamp at EL3. Thus, under a standard at either EL1 and EL2, DOE assumes, for the purpose of the LCC analysis, that consumers would purchase the 34W T12 lamp at EL3. DOE recognizes that not all consumers can use a 34W T12 lamp on a residential magnetic low-power-factor ballast because not all ballasts are designated to operate this lamp. However, in its review of manufacturer literature, DOE identified several low-power-factor residential magnetic ballasts designated to operate the 34W T12 lamp. Therefore, DOE considers this to be a viable option for some residential consumers.

However, as seen in Table VI.7, these consumers who purchase the EL3 34W T12 lamp would encounter negative LCC savings. Although more efficacious than the baseline, the reduced-wattage 34W T12 lamp that meets this EL does not save sufficient energy to offset its increased purchase price within the 2.5-year analysis period. The replacement lamp would need to be in service for exactly 8 years or greater in order for the energy cost savings to offset the increased purchase price of the higher-efficacy 34W lamp.

Because no T12 lamps would be standards-compliant at EL4 and EL5, consumers with T12 ballasts who are confronted with a lamp failure at these levels are forced to retrofit their ballasts and instead purchase a T8 system. The LCC savings and incremental costs related to this action can be seen in Table VI.7 under the lamp and ballast replacement event (Event IB). In the commercial sector, DOE presented the standards-induced retrofit event (Event II), where consumers proactively (before their lamp fails) retrofit their lamp and ballast in anticipation of the inability to purchase a standards-compliant, equal-lumen T12 replacement lamp due to standards. In contrast, for the residential sector, DOE believes that consumers would replace their systems only when forced by a lamp failure. Thus, instead of presenting the standards-induced retrofit event (Event II), for the residential sector, DOE models Event IB, where a consumer replaces a lamp-and-ballast system in direct response to a lamp failure. At EL4 and EL5, the available T8 system options do not save sufficient energy savings to offset the increased purchase price of the lamp and ballast in 2.5 years, leading to negative LCC savings. In addition consumers who would be forced to retrofit their ballast would incur an installed price increase greater than $47.01 per system. DOE requests comment on all inputs used in the LCC analysis for GSFL operating in the residential sector.

TABLE VI.7—LCC RESULTS FOR A 2–LAMP FOUR-FOOT MEDIUM BIPIN GSFL SYSTEM OPERATING IN THE RESIDENTIAL SECTOR WITH HIGH OPERATING HOURS

Baseline	Efficiency level	LCC savings 2007$		Installed price 2007$	
		Event IA: Lamp replacement*	Event IB: Lamp and ballast replacement*	Event IA: Lamp replacement	Event IB: Lamp and ballast replacement
40 Watt T12	Baseline	N/A	N/A	3.98	3.98.
	EL1	LL	EN/A	LL	EN/A.
	EL2	LL	EN/A	LL	EN/A.
	EL3	−5.42	EN/A	12.46	EN/A.
	EL4	NR	−4.67 to −2.78	NR	50.99 to 54.07.
	EL5	NR	−4.13 to −3.50	NR	51.16 to 52.03.

*Analysis period is 2.5 years.
N/A: Not Applicable; LL: Available Options Produce Less Light; EN/A: Event Not Applicable; NR: No Replacement

Table VI.8 presents the results for an electronically-ballasted 4-foot T5 miniature bipin standard-output, baseline system operating in the commercial sector. Table VI.9 presents the results for an electronically-ballasted 4-foot T5 miniature bipin high-output baseline system operating in the industrial sector. For the standard-output baseline, the analysis period is 5.5 years. For the high-output baseline, the analysis period is 3.9 years. In general, positive LCC savings exist at all of the efficacy levels analyzed. However, negative LCC savings exist for Event I (Lamp Replacement) in the 4-foot T5 miniature bipin HO product class. Yet for the 4-foot T5 miniature bipin standard-output product class, consumers selecting a reduced-wattage T5 achieve positive LCC savings. Event II (Standards Induced Retrofit) is not shown because the 4-foot miniature bipin product class is composed entirely of T5 lamps. For Event V, consumers can change the physical layout of their system to match the mean lumen output of the baseline system. Because the T5 baseline halophosphors have such poor lumen maintenance compared to the 800-series T5 lamps, LCC savings for the new construction event are high.

TABLE VI.8—LCC RESULTS FOR A 2-LAMP FOUR-FOOT MINIATURE BIPIN STANDARD OUTPUT GSFL SYSTEM OPERATING IN THE COMMERCIAL SECTOR

Baseline	Efficiency level	LCC savings 2007$		Installed price 2007$	
		Event IA: Lamp replacement*	Event V: New construction/renovation*	Event IA: Lamp replacement	Event V: New construction/renovation
28 Watt T5	Baseline	N/A	N/A	9.39	69.20.
	EL1	NER	42.84	13.15	72.96.
	EL2	1.22	45.27 to 47.03	14.86	74.67 to 75.16.

*Analysis period is 5.5 years.
N/A: Not Applicable; NER: No Energy-Saving Replacement.

TABLE VI.9—LCC RESULTS FOR A 2-LAMP FOUR-FOOT MINIATURE BIPIN HIGH OUTPUT GSFL SYSTEM OPERATING IN THE INDUSTRIAL SECTOR

Baseline	Efficiency level	LCC savings 2007$		Installed price 2007$	
		Event IA: Lamp replacement*	Event V: New construction/renovation*	Event IA: Lamp replacement	Event V: New construction/renovation
54 Watt T5	Baseline	N/A	N/A	10.44	71.33.
	EL1	−3.42	55.60 to 56.60	19.85	76.36 to 80.74.

*Analysis period is 3.9 years.
N/A: Not Applicable; NER: No Energy-Saving Replacement.

Table VI.10 presents the results for an 8-foot single-pin slimline GSFL system operating in the commercial sector. The analysis period is 4 years. For this product class, DOE analyzes three baseline lamps: (1) 75W T12; (2) 60W T12; and (3) 59W T8.

For the 75W T12 baseline, consumers confronted with a lamp failure purchase the baseline 75W T12 for their magnetic T12 ballast in the base case. In the face of standards, consumers could save energy by purchasing reduced-wattage (60W) T12 lamps as replacements. The only 60W T12 lamp that produces sufficient light on the baseline ballast, however, exists at EL3. For the purposes of the LCC analysis, DOE assumes that at standard levels EL1 and EL2, 75W T12 consumers confronted with a lamp failure would purchase the EL3 replacement lamp. These consumers would achieve positive LCC savings. Note that any standard level beyond EL3 would likely require consumers to replace their T12 lamps and ballasts with T8 systems, since no T12 lamp currently meets the efficacy requirements of EL4 and EL5. The LCC savings and installed costs associated with this action are shown in the standards induced retrofit event in Table VI.10. The EL4 lamp available in this event does not produce sufficient light output, so DOE assumes that at standard level EL4, 75W T12 consumers would retrofit to the EL5 59W T8 and 0.88 ballast factor ballast. At EL4 and EL5, 75W T12 consumers who retrofit to the EL5 T8 system achieve positive LCC savings while incurring an incremental installed price of $78.96 per system.

In response to a ballast failure, 75W T12 consumers can purchase more-efficacious 75W T12 lamps and lower-ballast-factor ballasts at EL1 and EL2. These systems do not save enough energy over their lifetimes to offset their increased installed prices, however, resulting in negative LCC savings for consumers. The systems at EL3 and EL4 do not produce sufficient lumen output in comparison to the baseline system, so DOE assumes that 75W T12 consumers encountering ballast failures would purchase the EL5 59W T8 and 0.88 ballast factor ballast at standard levels EL3 and EL4. At standard levels EL4 and EL5, only T8 systems are available. It is possible, however, for 75W T12 consumers to achieve positive LCC savings by purchasing the EL5 T8 system.

In response to a lamp failure, consumers of 60W T12 lamps do not have access to any energy-saving T12 replacement lamps. At EL1, consumers could still purchase the 60W T12 baseline lamp for their magnetic ballast. T12 lamps that do not save energy are also available at standard levels EL2 and EL3, with installed price increases ranging from $4.88 to $8.30. To save energy at EL2 and EL3, consumers of 60W T12 lamps can instead choose to retrofit to T12 or T8 systems with electronic ballasts. 60W T12 consumers would not be able to achieve positive LCC savings with any of the systems available for a standards-induced retrofit at any EL, although they would save energy. Standard levels EL4 and EL5 also force T12 lamps from the market, requiring consumers to retrofit to T8 systems and incur installed price increases of at least $82.08.

In response to a ballast failure, DOE assumes that 60W T12 consumers would purchase 60W T12 lamps and 0.88 ballast factor electronic ballasts in the base case. Consumers can also purchase this system at standard level EL1. At standard levels EL2 and EL3, consumers could purchase more-efficacious 60W T12 lamps and lower-ballast-factor electronic ballasts when faced with a ballast failure. Consumers cannot save enough energy with these systems to achieve positive LCC savings, however. Instead, they can purchase the T8 systems on electronic ballasts available at EL4 and EL5 and achieve positive LCC savings. In the face of standard levels EL4 and EL5, T12 systems would be eliminated from the market. Consumers can achieve the greatest positive LCC savings with a 57W T8 on a 0.78 ballast factor electronic ballast at EL5, while consumers purchasing the 59W T8 on a 0.78 ballast factor electronic ballast at EL4 achieve the least positive LCC savings.

Consumers of 59W T8 lamps can purchase the baseline 59W T8 to install on an electronic ballast at standard levels EL1 through EL3 when faced with a lamp failure. At EL4, there are no energy-saving lamp replacement options, so DOE assumes that

consumers of 59W T8 lamps would instead purchase the 57W or 55W T8 lamps that comply with EL5. Consumers purchasing these lamps achieve positive LCC savings and incur installed price increases ranging from $3.94 to $4.76. Those purchasing the 55W T8 achieve the greatest positive LCC savings.

In response to a ballast failure, consumers of 59W T8 lamps can purchase the baseline 59W T8 system at EL1 through EL3. The available system at EL4 is a 59W T8 lamp on a 0.85 ballast factor electronic ballast, and consumers purchasing this system would achieve negative LCC savings. At EL5, 59W T8 consumers could purchase 59W, 57W, or 55W T8 systems on electronic ballasts and achieve positive LCC savings. Those purchasing the 55W T8 system would achieve the greatest positive LCC savings, while those purchasing the 57W T8 system would achieve the least positive LCC savings.

BILLING CODE 6450–01–P

Table VI.10 LCC Results for a 2-Lamp Eight-Foot Single-Pin Slimline GSFL System Operating in the Commercial Sector

Baseline	Efficiency Level	LCC Savings 2007$			Installed Price 2007$		
		Event IA: Lamp Replacement*	Event II: Standards-Induced Retrofit (Lamp and Ballast Replacement)*	Event III: Ballast Failure*†	Event IA: Lamp Replacement	Event II: Standards-Induced Retrofit (Lamp and Ballast Replacement)	Event III: Ballast Failure†
75 Watt T12	Base-line	N/A	N/A	N/A	16.16	16.16	88.94
	EL1	LL	EN/A	-4.59	LL	EN/A	95.31
	EL2	LL	EN/A	-0.59	LL	EN/A	97.21
	EL3	36.73	EN/A	LL	19.43	EN/A	LL
	EL4	NR	LL	LL	NR	LL	LL
	EL5	NR	11.45	28.45	NR	95.12	92.82
60 Watt T12	Base-line	N/A	N/A	N/A	11.33	11.33	84.11
	EL1	NER	BAE	BAE	BAE	BAE	BAE
	EL2	NER	-24.86	-2.48	16.01	91.10	88.79
	EL3	NER	-24.31 to -23.98	-1.61	19.43	89.03 to 94.52	92.21
	EL4	NR	-14.90	7.47	NR	93.41	91.10
	EL5	NR	-14.02 to -12.26	8.35 to 10.12	NR	93.79 to 95.12	91.48 to 92.82
59 Watt T8	Base-line	N/A	EN/A	N/A	12.74	EN/A	86.72
	EL1	BAE	EN/A	BAE	BAE	EN/A	BAE
	EL2	BAE	EN/A	BAE	BAE	EN/A	BAE
	EL3	BAE	EN/A	BAE	BAE	EN/A	BAE
	EL4	NER	EN/A	-0.24	NER	EN/A	91.10
	EL5	6.48 to 10.42	EN/A	8.15 to 10.42	16.68 to 17.50	EN/A	90.67 to 92.82

†For 59-Watt T8 baseline, includes Event V (New Construction and Renovation).
*Analysis period is 4 years.
N/A: Not Applicable; NER: No Energy-Saving Replacement; LL: Available Options Produce Less Light; EN/A: Event Not Applicable; BAE: Baseline Above Efficiency Level; NR: No Replacement

Table VI.11 shows LCC results for an 8-foot recessed double-contact GSFL system operating in the industrial sector. The analysis period for this product class is 2.3 years. DOE analyzes 110W T12 and 95W T12 baseline lamps on magnetic ballasts.

Consumers who own 110W T12 lamps and are faced with a lamp failure would be expected to purchase 110W T12 baseline lamps for their magnetic ballast in the base case. The available replacement lamps at EL1 and EL2 do not produce sufficient light output in comparison to the baseline system, so DOE assumes that 110W T12 consumers would purchase the reduced-wattage

(95W) T12 lamp options at EL3 when faced with standard levels EL1 and EL2. Consumers could achieve positive LCC savings with these lamps while incurring installed price increases of $12.64 or $13.27. Standard levels EL4 and EL5 eliminate T12 lamps from the market, requiring consumers to retrofit their systems to T8 systems in the face of a lamp failure. The available T8 system at EL4 does not produce sufficient light in comparison with the baseline system, so DOE assumes that at EL4, consumers would instead purchase the 86W T8 system and 0.88 ballast factor electronic ballast at EL5. 110W T12 consumers purchasing this system could achieve positive LCC savings while incurring an installed price increase of $106.75.

In the face of a ballast failure, 110W T12 consumers would be expected to purchase the 110W T12 baseline lamp and a 0.95 ballast factor magnetic ballast in the base case. Consumers who own 110W T12 systems can purchase replacement systems that comply with EL1, EL3, or EL5 and achieve positive LCC savings. The available systems at EL2 and EL4 do not produce sufficient light, so DOE assumes that in the face of standard levels EL2 or EL4, consumers would purchase systems meeting higher standard levels. At EL1, 110W T12 consumers could purchase a 110W T12 lamp on an electronic ballast but would achieve the least positive LCC savings. At EL3, consumers could purchase reduced-wattage (95W) T12 lamps on a magnetic ballast or on an electronic ballast. Consumers could achieve the most positive LCC savings of any EL by purchasing the 86W T8 system available at EL5. Standard levels EL4 and EL5 would eliminate T12 systems from the market, making the 86W T8 system the only available option.

When faced with a lamp failure, consumers of the 95W T12 baseline lamp would be expected to purchase the 95W T12 baseline for their magnetic ballast in the base case. This lamp also complies with EL1. None of the lamps available at EL1 through EL3, when in combination with the magnetic ballast save energy as compared to the baseline system. However, consumers can purchase these lamps and incur installed price increases ranging from $6.14 to $19.09. Consumers of the 95W T12 baseline lamp could instead retrofit their systems to save energy. The EL1 system available for retrofit does not produce sufficient light output, and consumers could not achieve positive LCC savings with any of the system options available for retrofit at EL2 through EL5. Furthermore, standard levels EL4 and EL5 would eliminate T12 lamps from the market, thereby forcing consumers of the 95W T12 baseline lamp to retrofit to T8 systems when faced with a lamp failure and incur installed price increases ranging from $109.35 to $112.57.

When faced with a ballast failure, consumers of 95W T12 lamps could purchase a 95W T12 baseline lamp on a magnetic ballast in the base case. Consumers purchasing a higher efficacy 95WT12 at EL2 on an electronic ballast achieve positive LCC savings. However, consumers purchasing these systems at EL3, would not achieve positive LCC savings. EL4 and EL5 would likely eliminate T12 systems from the market, making the EL4 and EL5 86W T8 system the only available option for consumers faced with a ballast failure. Those who purchase the 86W T8 system at EL4 or EL5 can achieve positive LCC savings.

Table VI.11 LCC Results for a 2-Lamp Eight-Foot Recessed Double-Contact High Output GSFL System Operating in the Industrial Sector

Baseline	Efficiency Level	LCC Savings 2007$			Installed Price 2007$		
		Event I: Lamp Replacement *	Event II: Standards-Induced Retrofit (Lamp and Ballast Replacement) *	Event III: Ballast Failure*	Event I: Lamp Replacement	Event II: Standards-Induced Retrofit (Lamp and Ballast Replacement)	Event III: Ballast Failure
110 Watt T12	Base-line	N/A	N/A	N/A	19.74	19.74	97.60
	EL1	LL	EN/A	6.01	LL	EN/A	113.23
	EL2	LL	EN/A	LL	LL	EN/A	LL
	EL3	7.05 to 7.67	EN/A	7.05 to 16.07	32.38 to 33.01	EN/A	110.24 to 114.96
	EL4	NR	LL	LL	NR	LL	LL
	EL5	NR	5.13	42.23	NR	126.49	124.19
95 Watt T12	Base-line	N/A	N/A	N/A	13.92	13.92	91.77
	EL1	NER	LL	LL	BAE	LL	LL
	EL2	NER	-28.71	5.47	20.06	104.32	102.01
	EL3	NER	-39.07 to -38.44	-4.89 to -4.27	32.38 to 33.01	116.64 to 117.27	114.33 to 114.96
	EL4	NR	-16.04 to -12.88	18.13 to 21.30	NR	123.27 to 123.60	120.96 to 121.29
	EL5	NR	-12.70	21.47	NR	126.49	124.19

*Analysis period is 2.3 years.
N/A: Not Applicable; NER: No Energy-Saving Replacement; LL: Available Options Produce Less Light; EN/A: Event Not Applicable; NR: No Replacement

ii. Incandescent Reflector Lamps

Table VI.12 shows the commercial and residential sector LCC results for IRL. The results are based on the reference case *AEO2008* electricity price forecast and medium-range lamp prices. The analysis period is 3.4 years for the residential sector and 0.9 years for the commercial sector. DOE assessed three efficacy levels for the March 2008 ANOPR. 73 FR 13620, 13666–13667 (March 13, 2008). For the NOPR, DOE added two additional efficacy levels—one below the lowest EL considered in the March 2008 ANOPR, and one above the highest EL considered in the March 2008 ANOPR See the engineering analysis in chapter 5 of the TSD or section V.C.4.b of this notice for details.

The majority of efficacy levels result in positive LCC savings in spite of the higher installed prices of the standards-case lamps in comparison with the baseline lamps. In general, the higher lumen package lamps (*i.e.*, those replacing the 90W baseline lamp) achieve higher LCC savings that the lower lumen package lamps (*i.e.*, those replacing the 75W and 50W baselines). This is due to the larger energy savings, and, thus, operating cost savings associated with higher-wattage lamps. At EL1, in all but the residential 90W PAR38 baseline, consumers would achieve negative LCC savings when purchasing the improved halogen lamp. The improved halogen lamp at this efficacy level would not save enough energy to recover its increased initial cost from the baseline lamp. Maximum LCC savings would be achieved at EL5 for the 90W and 75W baselines when a consumer purchases an improved HIR lamp. For the 50W baseline, both the EL4 and EL5 replacement lamps are 40W, as this is the lowest-wattage IRL covered by standards. Therefore, EL4, consuming the same amount of energy and with a lower lamp price, would have higher LCC savings than EL5. In general, the lamps with the highest LCC savings are more efficacious and have longer lifetimes than the baseline lamps.

TABLE VI.12—LCC RESULTS FOR INCANDESCENT REFLECTOR LAMPS

Baseline	Efficiency level	Event I: Lamp replacement/Event V: New construction and renovation			
		LCC savings 2007$		Installed price 2007$	
		Commercial *	Residential **	Commercial	Residential
90 Watt PAR38	Baseline	N/A	N/A	6.20	5.13.
	EL1	−0.03	0.12	7.14	6.07.
	EL2	3.81 to 6.04	3.06 to 4.68	7.58 to 7.76	6.52 to 6.70.
	EL3	6.19	5.55	7.76	6.70.
	EL4	8.14	7.09	9.08	8.02.
	EL5	9.41	8.76	9.65	8.59.
75 Watt PAR38	Baseline	N/A	N/A	6.20	5.13.
	EL1	−0.31	−0.18	7.14	6.07.
	EL2	3.24 to 5.67	2.46 to 4.30	7.58 to 7.76	6.52 to 6.70.
	EL3	4.77	4.07	7.76	6.70.
	EL4	7.00	5.90	9.08	8.02.
	EL5	7.50	6.77	9.65	8.59.
50 Watt PAR30	Baseline	N/A	N/A	5.59	4.53.
	EL1	−0.31	−0.28	6.53	5.46.
	EL2	0.04 to 2.72	0.10 to 2.21	6.98 to 7.15	5.92 to 6.09.
	EL3	0.77	0.87	7.15	6.09.
	EL4	1.95	1.62	8.47	7.41.
	EL5	1.51	1.49	9.04	7.98.

*Analysis period is 0.9 years.
**Analysis period is 3.4 years.

b. Consumer Subgroup Analysis

Certain consumer subgroups may be disproportionately affected by standards. In the March 2008 ANOPR, DOE requested comment on which consumer subgroups should be considered as well as methods of analyzing those subgroups. 73 FR 13620, 13682 (March 13, 2008). In response to comments it received, DOE performed LCC subgroup analyses in this NOPR for low-income consumers, institutions of religious worship, and institutions that serve low-income populations. See section 0 of this NOPR for a review of the inputs to the LCC analysis. The following discussion presents the most significant results from the LCC subgroup analysis.

All of the LCC results shown here were generated using *AEO2008* reference case electricity prices. In addition, DOE presents subgroup results using medium-range lamp and ballast prices, as DOE believes that these prices represent average prices for the consumer subgroups as well. As in the primary LCC analysis, not all baselines and lamp purchase events have suitable replacement options at every efficacy level. See the primary LCC analysis results in section VI.B.1.a of this NOPR for more details on this analysis, as well as the TSD chapter 12 for a full set of LCC and PBP results for the subgroup analysis.

i. Low-Income Households

DOE conducted the low-income consumer subgroup analysis based on the 4-foot MBP 40W baseline operating in the residential sector and IRL operating in the residential sector. The low-income consumer subgroup analysis is identical to the residential average consumer LCC analysis, except that it includes slightly lower electricity prices, which DOE determined using data in the 2001 RECS. In comparing this subgroup's LCC results to the primary results presented in Table VI.5, Table VI.6, and Table VI.12, positive primary LCC savings results remained positive and negative primary LCC savings results remained negative. In general, LCC savings for GSFL and IRL are approximately 1 to 2 percent lower for low-income residential consumers than they are for the average consumer in the residential sector.

ii. Institutions of Religious Worship

DOE found that institutions of religious worship have the lowest operating hours of any non-mall commercial building. Specifically, operating hours were 1,705 hours per year for GSFL (vs. the commercial sector average of 3,435 hours per year) and 1,609 hours per year for IRL (vs. the commercial sector average of 3,450 hours per year). The LCC analysis for this subgroup is identical to the main commercial sector LCC analysis except for the lower operating hours, resulting in an analysis period of 11 years for 4-foot GSFL, 8 years for 8-foot GSFL, and 1.9 years for IRL. Results are shown in Table VI.13 through Table VI.16 of this notice.

Institutions of religious worship experience lower LCC savings than the rest of the commercial sector, particularly for standards-induced retrofit events. This is because the longer analysis period (due to lower operating hours) causes operating cost savings and residual values to be discounted more heavily than in the primary commercial LCC analysis. In general, LCC savings that were positive for the 4-foot medium bipin product class in the primary commercial sector analysis remain positive for institutions of religious worship. For example, in Event II, LCC savings for institutions of religious worship are approximately $17 lower than savings for the rest of the commercial sector for the 40W T12 baseline. However, LCC savings for the standards-induced retrofit event for the 34W T12 baseline lamp and 40W T12 baseline lamp are negative for certain T8 systems at EL4 and EL5.

In the 4-foot T5 miniature bipin product class, LCC savings for institutions of religious worship are several dollars lower than savings for the rest of the commercial sector. This is also true for the 8-foot single-pin slimline product class except for the standards-induced retrofit event, where LCC savings for such institutions are approximately $20 lower than savings

for the rest of the commercial sector. DOE notes that the standards-induced retrofit of a 75W T12 system at EL5 is not cost-effective for religious institutions.

For IRL, LCC savings for institutions of religious worship are generally lower by several cents compared to the rest of the commercial sector due to the longer analysis period. LCC savings are slightly higher, however, at EL1 for the 90W and 75W PAR38 baselines.

Table VI.13 LCC Subgroup Results for a 3-Lamp Four-Foot Medium Bipin GSFL System Operating in Institutions of Religious Worship

Baseline	Efficiency Level	LCC Savings 2007$			Installed Price 2007$		
		Event IA: Lamp Replacement*	Event II: Standards-Induced Retrofit (Lamp and Ballast Replacement)*	Event III: Ballast Failure*†	Event IA: Lamp Replacement	Event II: Standards-Induced Retrofit (Lamp and Ballast Replacement)	Event III: Ballast Failure†
40 Watt T12	Base-line	N/A	N/A	N/A	13.96	13.96	65.89
	EL1	LL	EN/A	-8.34 to -5.79	LL	EN/A	72.51 to 77.16
	EL2	LL	EN/A	-8.62	LL	EN/A	77.45
	EL3	16.43	EN/A	10.35 to 10.49	25.13	EN/A	68.21 to 77.06
	EL4	NR	-2.17 to 9.71	17.84 to 29.71	NR	63.26 to 75.56	60.96 to 73.25
	EL5	NR	4.02 to 8.27	24.03 to 28.27	NR	64.83 to 71.19	62.52 to 68.89
34 Watt T12	Base-line	N/A	N/A	N/A	11.22	11.22	63.15
	EL1	NER	-28.33	-2.04	14.91	69.15	66.84
	EL2	NER	-33.71 to -14.90	-9.07 to 9.74	21.94	59.74 to 76.18	57.43 to 73.87
	EL3	NER	-34.85 to -7.25	-10.17 to 17.39	25.13	62.84 to 79.37	60.53 to 77.06
	EL4	NR	-3.13 to 4.96	21.51 to 29.60	NR	63.26 to 67.88	60.96 to 65.57
	EL5	NR	-0.27 to 3.24	24.37 to 27.88	NR	63.51 to 64.83	61.20 to 62.52
32 Watt T8	Base-line	N/A	N/A	N/A	11.97	11.97	57.43
	EL1	BAE	EN/A	BAE	BAE	EN/A	BAE
	EL2	BAE	EN/A	BAE	BAE	EN/A	BAE
	EL3	LL	EN/A	7.64	LL	EN/A	60.53
	EL4	3.37 to 19.86	EN/A	11.77 to 19.86	16.35 to 20.11	EN/A	60.96 to 65.57
	EL5	8.77	EN/A	8.77 to 10.33	15.74	EN/A	61.20 to 62.52

†For 32-Watt T8 baseline, includes Event V (New Construction and Renovation).
*Analysis period is 11 years.
N/A: Not Applicable; NER: No Energy-Saving Replacement; LL: Available Options Produce Less Light; EN/A: Event Not Applicable; BAE: Baseline Above Efficiency Level; NR: No Replacement

TABLE VI.14—LCC SUBGROUP RESULTS FOR A 2-LAMP FOUR-FOOT T5 MINIATURE BIPIN GSFL SYSTEM OPERATING IN INSTITUTIONS OF RELIGIOUS WORSHIP

Baseline	Efficiency level	LCC savings 2007$		Installed price 2007$	
		Event IA: Lamp replacement*	Event V: New construction/ renovation*	Event IA: Lamp replacement	Event V: New construction/ renovation
28 Watt T5	Baseline	N/A	N/A	9.39	69.20.
	EL1	NER	38.73	13.15	72.96.
	EL2	−0.08	39.74 to 42.31	14.86	74.67 to 75.16.

* Analysis period is 11 years.
N/A: Not Applicable; NER: No Energy-Saving Replacement.

Table VI.15 LCC Subgroup Results for a 2-lamp Eight-Foot Single-Pin Slimline GSFL System Operating in Institutions of Religious Worship

Baseline	Efficiency Level	LCC Savings 2007$			Installed Price 2007$		
		Event IA: Lamp Replacement*	Event II: Standards-Induced Retrofit (Lamp and Ballast Replacement)*	Event III: Ballast Failure*†	Event IA: Lamp Replacement	Event II: Standards-Induced Retrofit (Lamp and Ballast Replacement)	Event III: Ballast Failure†
75 Watt T12	Base-line	N/A	N/A	N/A	16.16	16.16	88.94
	EL1	LL	EN/A	-4.93	LL	EN/A	95.31
	EL2	LL	EN/A	-1.28	LL	EN/A	97.21
	EL3	31.83	EN/A	LL	19.43	EN/A	LL
	EL4	NR	LL	LL	NR	LL	LL
	EL5	NR	-6.68	24.20	NR	95.12	92.82
60 Watt T12	Base-line	N/A	N/A	N/A	11.33	11.33	84.11
	EL1	NER	BAE	BAE	BAE	BAE	BAE
	EL2	NER	-37.81	-2.85	16.01	91.10	88.79
	EL3	NER	-37.19 to -36.83	-2.23	19.43	89.03 to 94.52	92.21
	EL4	NR	-29.22	5.75	NR	93.41	91.10
	EL5	NR	-28.95 to -27.42	6.01 to 7.54	NR	93.79 to 95.12	91.48 to 92.82
59 Watt T8	Base-line	N/A	EN/A	N/A	12.74	EN/A	86.72
	EL1	BAE	EN/A	BAE	BAE	EN/A	BAE
	EL2	BAE	EN/A	BAE	BAE	EN/A	BAE
	EL3	BAE	EN/A	BAE	BAE	EN/A	BAE
	EL4	LL	EN/A	-0.78	LL	EN/A	91.10
	EL5	4.56 to 8.30	EN/A	6.01 to 8.30	16.68 to 17.50	EN/A	90.67 to 92.82

†For 59-Watt T8 baseline, includes Event V (New Construction and Renovation).
*Analysis period is 8 years.
N/A: Not applicable; NER: No Energy-Saving Replacement; LL: Available Options Produce Less Light; EN/A: Event Not Applicable; BAE: Baseline Above Efficiency Level; NR: No Replacement

TABLE VI.16—LCC SUBGROUP RESULTS FOR INCANDESCENT REFLECTOR LAMPS OPERATING IN INSTITUTIONS OF RELIGIOUS WORSHIP

Baseline	Efficiency level	Event I: Lamp replacement/Event V: New construction and renovation *	
		LCC savings 2007$	Installed price 2007$
90 Watt PAR38	Baseline	N/A	6.20.
	EL1	0.00	7.14.
	EL2	2.97 to 5.14	7.58 to 7.76.
	EL3	5.21	7.76.
	EL4	6.87	9.08.
	EL5	8.28	9.65.
75 Watt PAR38	Baseline	N/A	6.20.
	EL1	−0.26	7.14.
	EL2	2.43 to 4.79	7.58 to 7.76.
	EL3	3.87	7.76.
	EL4	5.80	9.08.
	EL5	6.48	9.65.
50 Watt PAR30	Baseline	N/A	5.59.
	EL1	−0.35	6.53.
	EL2	−0.04 to 2.55	6.98 to 7.15.
	EL3	0.64	7.15.
	EL4	1.58	8.47.
	EL5	1.37	9.04.

* Analysis period is 1.9 years.

iii. Institutions That Serve Low-Income Populations

Table VI.17 through Table VI.20 show the LCC subgroup results for institutions that serve low-income populations. DOE assumed that the majority of these institutions are small nonprofits; thus, DOE used a higher discount rate of 10.8 percent (versus the 7.0-percent discount rate for the primary commercial sector analysis). All other factors of the LCC subgroup analysis remained the same as in the primary commercial sector analysis. As a result of the higher discount rate, LCC savings are lower for institutions that serve low-income populations than for the rest of the commercial sector. For Events I and III for all analyzed GSFL product classes, savings are several dollars lower than for the rest of the commercial sector. For Event II for GSFL, LCC savings are approximately $10 lower than for the rest of the commercial sector. For IRL, LCC savings are several cents lower than for the rest of the commercial sector. Although LCC savings are lower, positive primary LCC results remained positive for this subgroup, while negative primary LCC results remained negative.

Table VI.17 LCC Subgroup Results for a 3-Lamp Four-Foot Medium Bipin GSFL System Operating in Institutions That Serve Low-Income Populations

Baseline	Efficiency Level	LCC Savings 2007$			Installed Price 2007$		
		Event IA: Lamp Replacement*	Event II: Standards-Induced Retrofit (Lamp and Ballast Replacement)*	Event III: Ballast Failure*†	Event IA: Lamp Replacement	Event II: Standards-Induced Retrofit (Lamp and Ballast Replacement)	Event III: Ballast Failure
40 Watt T12	Base-line	N/A	N/A	N/A	13.96	13.96	65.89
	EL1	LL	EN/A	-7.99 to -5.73	LL	EN/A	72.51 to 77.16
	EL2	LL	EN/A	-8.26	LL	EN/A	77.45
	EL3	18.66	EN/A	11.49 to 12.12	25.13	EN/A	68.21 to 77.06
	EL4	NR	4.49 to 16.57	19.49 to 31.57	NR	63.26 to 75.56	60.96 to 73.25
	EL5	NR	10.12 to 15.15	25.12 to 30.15	NR	64.83 to 71.19	62.52 to 68.89
34 Watt T12	Base-line	N/A	N/A	N/A	11.22	11.22	63.15
	EL1	NER	-23.97	-1.91	14.91	69.15	66.84
	EL2	NER	-29.23 to -10.34	-8.94 to 9.94	21.94	59.74 to 76.18	57.43 to 73.87
	EL3	NER	-30.05 to -1.88	-9.76 to 18.41	25.13	62.84 to 79.37	60.53 to 77.06
	EL4	NR	2.67 to 11.81	22.96 to 32.09	NR	63.26 to 67.88	60.96 to 65.57
	EL5	NR	5.87 to 8.48	26.16 to 28.76	NR	63.51 to 64.83	61.20 to 62.52
32 Watt T8	Base-line	N/A	N/A	N/A	11.97	11.97	57.43
	EL1	BAE	EN/A	BAE	BAE	EN/A	BAE
	EL2	BAE	EN/A	BAE	BAE	EN/A	BAE
	EL3	LL	EN/A	8.46	LL	EN/A	60.53
	EL4	3.96 to 22.15	EN/A	13.01 to 22.15	16.35 to 20.11	EN/A	60.96 to 65.57
	EL5	8.74	EN/A	8.74 to 11.59	15.74	EN/A	61.20 to 62.52

†For 32-Watt T8 baseline, includes Event V (New Construction and Renovation).
*Analysis period is 5.5 years.
N/A: No Replacement; NER: No Energy-Saving Replacement; LL: Available Options Produce Less Light; EN/A: Event Not Applicable; BAE: Baseline Above Efficiency Level; NR: No Replacement

TABLE VI.18—LCC SUBGROUP RESULTS FOR A 2-LAMP FOUR-FOOT MINIATURE BIPIN GSFL SYSTEM OPERATING IN INSTITUTIONS THAT SERVE LOW-INCOME POPULATIONS

Baseline	Efficiency level	LCC savings 2007$		Installed price 2007$	
		Event IA: Lamp replacement*	Events V: New construction/ renovation*	Event IA: Lamp replacement	Events V: New construction/ renovation
28 Watt T5	Baseline	N/A	N/A	9.39	69.20.
	EL1	NER	40.41	13.15	72.96.
	EL2	0.37	41.91 to 44.24	14.86	74.67 to 75.16.

* Analysis period is 5.5 years.
N/A: Not Applicable; NER: No Energy-Saving Replacement.

Table VI.19 LCC Subgroup Results for a 2-Lamp Eight-Foot Single-Pin Slimline GSFL System Operating in Institutions That Serve Low-Income Populations

Baseline	Efficiency Level	LCC Savings 2007$			Installed Price 2007$		
		Event IA: Lamp Replacement*	Event II: Standards-Induced Retrofit (Lamp and Ballast Replacement)*	Event III: Ballast Failure*†	Event IA: Lamp Replacement	Event II: Standards-Induced Retrofit (Lamp and Ballast Replacement)	Event III: Ballast Failure†
75 Watt T12	Base-line	N/A	N/A	N/A	16.16	16.16	88.94
	EL1	LL	EN/A	-4.81	LL	EN/A	95.31
	EL2	LL	EN/A	-0.97	LL	EN/A	97.21
	EL3	33.78	EN/A	LL	19.43	EN/A	LL
	EL4	NR	LL	LL	NR	LL	LL
	EL5	NR	1.57	25.94	NR	95.12	92.82
60 Watt T12	Base-line	N/A	N/A	N/A	11.33	11.33	84.11
	EL1	NER	BAE	BAE	BAE	BAE	BAE
	EL2	NER	-31.84	-2.72	16.01	91.10	88.79
	EL3	NER	-31.08 to -30.98	-1.96	19.43	89.03 to 94.52	92.21
	EL4	NR	-22.67	6.45	NR	93.41	91.10
	EL5	NR	-22.13 to -20.54	7.00 to 8.59	NR	93.79 to 95.12	91.48 to 92.82
59 Watt T8	Base-line	N/A	EN/A	N/A	12.74	EN/A	86.72
	EL1	BAE	EN/A	BAE	BAE	EN/A	BAE
	EL2	BAE	EN/A	BAE	BAE	EN/A	BAE
	EL3	BAE	EN/A	BAE	BAE	EN/A	BAE
	EL4	LL	EN/A	-0.57	LL	EN/A	91.10
	EL5	5.32 to 9.16	EN/A	6.86 to 9.16	16.68 to 17.50	EN/A	90.67 to 92.82

†For 59-Watt T8 baseline, includes Event V (New Construction and Renovation).
*Analysis period is 4 years.
N/A: Not applicable; NER: No Energy-Saving Replacement; LL: Available Options Produce Less Light; EN/A: Event Not Applicable; BAE: Baseline Above Efficiency Level; NR: No Replacement

TABLE VI.20—LCC SUBGROUP RESULTS FOR INCANDESCENT REFLECTOR LAMPS OPERATING IN INSTITUTIONS THAT SERVE LOW-INCOME POPULATIONS

Baseline	Efficiency level	Event I: Lamp replacement/Event V: New construction and renovation *	
		LCC savings 2007$	Installed price 2007$
90 Watt PAR38	Baseline	N/A	6.20.
	EL1	−0.09	7.14.
	EL2	3.84 to 6.00	7.58 to 7.76.
	EL3	6.14	7.76.
	EL4	7.97	9.08.
	EL5	9.18	9.65.
75 Watt PAR38	Baseline	N/A	6.20.
	EL1	−0.37	7.14.
	EL2	3.29 to 5.64	7.58 to 7.76.
	EL3	4.76	7.76.
	EL4	6.87	9.08
	EL5	7.34	9.65.
50 Watt PAR30	Baseline	N/A	5.59.
	EL1	−0.33	6.53.
	EL2	−0.01 to 2.57	6.98 to 7.15.
	EL3	0.69	7.15.
	EL4	1.78	8.47.
	EL5	1.34	9.04.

*Analysis period is 0.9 years.

iv. Historical Facilities

DOE found that historical facilities have similar operating hours, discount rates, and electricity prices as the typical consumer, although they do own more T12 systems. Accordingly, for this subgroup, no separate findings are warranted. See section VI.B.1.a.i of this notice to view the impacts on those consumers with T12 lamps.

v. Consumers of T12 Electronic Ballasts

Table VI.21 through Table VI.24 show the LCC subgroup results for consumers of T12 electronic ballasts. Specifically, DOE analyzed the LCC savings of a consumer that owns a T12 electronic system in the base case. In the case of an energy conservation standard at EL4 or EL5, this consumer would need to purchase a T8 electronic system, as T12 lamps would no longer available. DOE established a new baseline electronic T12 system and modified standards case systems so that both of the following conditions are met: (1) Light output is maintained in the case of a standard; and (2) energy is saved. All other factors of the LCC subgroup analysis remained the same as in the primary analysis. Because electronic T12 systems are much more efficient than magnetic T12 systems, the LCC savings for this subgroup are lower than the LCC savings for systems in the primary analysis. For 4-foot medium bipin lamps operating in the commercial sector, LCC savings are reduced by approximately $20 to $30, going from positive LCC savings in the primary analysis to negative LCC savings for this subgroup. The source of this reduction is primarily due to the increased efficacy of the baseline system.

TABLE VI.21—LCC SUBGROUP RESULTS FOR A 3-LAMP FOUR-FOOT ELECTRONIC MEDIUM BIPIN GSFL SYSTEM OPERATING IN THE COMMERCIAL SECTOR

Baseline	Efficiency level	Event II: Standards-induced retrofit (lamp & ballast replacement)	
		LCC savings * 2007$	Installed price 2007$
40 Watt T12	Baseline	N/A	13.96.
	EL1	EN/A	EN/A.
	EL2	EN/A	EN/A.
	EL3	EN/A	EN/A.
	EL4	−16.72 to −4.37	63.26 to 75.56.
	EL5	−9.98 to −5.76	64.83 to 71.19.
34 Watt T12	Baseline	N/A	11.22.
	EL1	EN/A	EN/A.
	EL2	EN/A	EN/A.
	EL3	EN/A	EN/A.
	EL4	−12.38 to −1.43	63.26 to 67.88.
	EL5	−8.63 to −5.53	63.51 to 64.83.

* Analysis period is 5.5 years.
EN/A: Event Not Applicable; N/A: Not Applicable.

For 4-foot medium bipin lamps operating in the residential sector, LCC savings, already negative in the primary analysis, become slightly more negative for this subgroup. The change in the savings is not as large in the residential sector as in the commercial sector because consumers for this event have a shortened analysis period.

TABLE VI.22—LCC SUBGROUP RESULTS FOR A 2-LAMP FOUR-FOOT ELECTRONIC MEDIUM BIPIN GSFL SYSTEM OPERATING IN THE RESIDENTIAL SECTOR USING HIGH OPERATING HOURS

Baseline	Efficiency level	Event IB: Lamp & ballast replacement	
		LCC savings 2007$	Installed price 2007$
40 Watt T12	Baseline	N/A	3.98.
	EL1	EN/A	EN/A.
	EL2	EN/A	EN/A.
	EL3	EN/A	EN/A.
	EL4	−8.35 to −6.45	50.99 to 54.07.
	EL5	−7.80 to −7.18	51.16 to 52.03.

* Analysis period is 2.5 years.
EN/A: Event Not Applicable; N/A: Not Applicable.

For 8-foot single pin slimline lamps, LCC savings are reduced by approximately $18 to $25. For the 75W T12 baseline, consumers experience negative LCC savings for this subgroup as opposed to the positive LCC savings experienced by consumers in the primary analysis. For the 60W T12 baseline, LCC savings, already negative in the primary analysis, become more negative for this subgroup. The source of this reduction is primarily due to the increased efficacy of the baseline system.

TABLE VI.23—LCC SUBGROUP RESULTS FOR A 2-LAMP EIGHT-FOOT ELECTRONIC SINGLE-PIN SLIMLINE GSFL SYSTEM OPERATING IN THE COMMERCIAL SECTOR

Baseline	Efficiency level	Event II: Standards-induced retrofit (lamp & ballast replacement)	
		LCC savings* 2007$	Installed price 2007$
75 Watt T12	Baseline	N/A	16.16.
	EL1	EN/A	EN/A.
	EL2	EN/A	EN/A.
	EL3	EN/A	EN/A.
	EL4	LL	93.41.
	EL5	−14.18	95.12.
60 Watt T12	Baseline	N/A	11.33.
	EL1	EN/A	EN/A.
	EL2	EN/A	EN/A.
	EL3	EN/A	EN/A.
	EL4	−32.74	93.41.
	EL5	−31.86 to −30.09	93.79 to 95.12.

* Analysis period is 4.0 years.
EN/A: Event Not Applicable; N/A: Not Applicable.

For 8-foot recessed double contact high output lamps, LCC savings are reduced by approximately $10 to $15. For the 110W T12 baseline, consumers experience negative LCC savings for this subgroup as opposed to the positive LCC savings experienced by consumers in the primary analysis. For the 95W T12 baseline, LCC savings, already negative in the primary analysis, become more negative. The source of this reduction is again primarily due to the increased efficacy of the baseline system.

TABLE VI.24—LCC SUBGROUP RESULTS FOR A 2-LAMP EIGHT-FOOT ELECTRONIC RECESSED DOUBLE-CONTACT HIGH OUTPUT GSFL SYSTEM OPERATING IN THE INDUSTRIAL SECTOR

Baseline	Efficiency level	Event II: Standards-induced retrofit (lamp & ballast replacement)	
		LCC savings 2007$	Installed price 2007$
110 Watt T12	Baseline	N/A	19.74.
	EL1	EN/A	EN/A.
	EL2	EN/A	EN/A.
	EL3	EN/A	EN/A.
	EL4	LL	123.27 to 123.60.
	EL5	−10.09	126.49.

TABLE VI.24—LCC SUBGROUP RESULTS FOR A 2-LAMP EIGHT-FOOT ELECTRONIC RECESSED DOUBLE-CONTACT HIGH OUTPUT GSFL SYSTEM OPERATING IN THE INDUSTRIAL SECTOR—Continued

Baseline	Efficiency level	Event II: Standards-induced retrofit (lamp & ballast replacement)	
		LCC savings 2007$	Installed price 2007$
95 Watt T12	Baseline	N/A	13.92.
	EL1	EN/A	EN/A.
	EL2	EN/A	EN/A.
	EL3	EN/A	EN/A.
	EL4	−26.41 to −23.25	123.27 to 123.60.
	EL5	−23.07	126.49.

* Analysis period is 2.3 years.
EN/A: Event Not Applicable; N/A: Not Applicable.

2. Economic Impacts on Manufacturers

DOE used the INPV in the MIA to compare the financial impacts of different TSLs on GSFL and IRL manufacturers. The INPV is the sum of all net cash flows discounted by the industry's cost of capital (discount rate). DOE used the GRIMs to compare the INPV of the base case (no amended energy conservation standards) to that of each TSL for the GSFL and IRL industries. To evaluate the range of cash-flow impacts on the industries, DOE constructed different scenarios for each industry using different assumptions for markups and shipments that correspond to the range of anticipated market responses. Each scenario results in a unique set of cash flows and corresponding industry value at each TSL. These steps allowed DOE to compare the potential impacts on industries as a function of TSLs in the GRIMs. The difference in INPV between the base case and the standards case is an estimate of the economic impacts that implementing that standard level would have on the entire industry.

a. Industry Cash-Flow Analysis Results

i. General Service Fluorescent Lamps

To assess the lower end of the range of potential impacts for the GSFL industry, DOE considered the flat markup scenario under the Existing Technologies base case, shipments with high lighting expertise, and a shift in efficacy distributions. Besides the impact of shipments on the INPV, this case assumed that manufacturers would be able to maintain gross margins as a percentage of revenues as production cost increases with efficacy. To assess the higher end of the range of potential impacts for the GSFL industry, DOE considered the scenario reflecting the four-tier markup scenario under the Emerging Technologies base case, shipments with market-based lighting expertise, and a rollup in efficacy distributions. Besides the impact of shipments on the INPV, this case assumed standards would reduce manufacturers' portfolio, thereby squeezing the margin of higher-efficacy products as they are ''demoted'' to lower-relative-efficacy tier products. Table VI.25 and Table VI.26 show the low end and high end of the range of MIA results, respectively, for each TSL using the cases described above.

TABLE VI.25—MANUFACTURER IMPACT ANALYSIS FOR GSFL WITH THE FLAT MARKUP SCENARIO UNDER THE EXISTING TECHNOLOGIES BASE CASE—HIGH LIGHTING EXPERTISE—SHIFT IN EFFICIENCY DISTRIBUTIONS

	Units	Base case	Trial standard level				
			1	2	3	4	5
INPV	(2007$ millions)	602	652	653	673	594	616
Change in INPV	(2007$ millions)		49	50	71	−9	13
	(%)		8.18%	8.31%	11.78%	−1.48%	2.21%
Amended Energy Conservation Standards Product Conversion Expenses.	(2007$ millions)		3.3	8.8	8.8	11.6	29.6
Amended Energy Conservation Standards Capital Conversion Expenses.	(2007$ millions)		38.5	60.5	104.5	181.5	181.5
Total Investment Required	(2007$ millions)		41.8	69.3	113.3	193.1	211.1

TABLE VI.26—MANUFACTURER IMPACT ANALYSIS FOR GSFL WITH THE FOUR-TIER MARKUP SCENARIO UNDER THE EMERGING TECHNOLOGIES BASE CASE—MARKET SEGMENT LIGHTING EXPERTISE—ROLLUP IN EFFICIENCY DISTRIBUTIONS

	Units	Base case	Trial standard level				
			1	2	3	4	5
INPV	(2007$ millions)	575	668	638	436	380	312
Change in INPV	(2007$ millions)		93	63	−139	−195	−263
	(%)		16.09%	11.02%	−24.15%	−33.96%	−45.80%
Amended Energy Conservation Standards Product Conversion Expenses.	(2007$ millions)		3.3	8.8	8.8	11.6	29.6
Amended Energy Conservation Standards Capital Conversion Expenses.	(2007$ millions)		38.5	60.5	104.5	181.5	181.5
Total Investment Required	(2007$ millions)		41.8	69.3	113.3	193.1	211.1

For the GSFL MIA, margin impacts are the most significant driver of INPV. The potential margin impacts on manufacturers are based on their ability to maintain higher margins as standards remove efficacy as a differentiator of premium products. The potential for standards to disrupt the premium margins for efficacy is captured in the higher-bound and lower-bound scenarios DOE presents. The lower-bound scenario represents the situation where manufacturers maintain their current ''good, better, best'' marketing strategy by basing higher margins on features other than efficacy or coming up with more-efficient products. The large impacts on industry value in the upper-bound scenario are caused by higher standards disrupting manufacturers' current marketing strategy. In this scenario, manufacturers cannot maintain higher margins when efficacy is lost as a differentiator and higher standards lower profitability. Other drivers of INPV are less significant because: (1) The capital costs required at each TSL are relatively small compared to the industry revenue; and (2) shipments do not substantially change regardless of the scenario.

DOE estimated the impacts on INPV at TSL1 to range from $49 million to $93 million, equal to a 8.2 percent to 16.1 percent increase. At this level, the highest impact on cash flow in the year leading up to the standards occurs under the Emerging Technologies base case. Under this scenario, industry cash flow decreases by approximately 37 percent, to $32 million, compared to the base-case value of $50 million in the year leading up to the standards. Product conversion costs are low at TSL1 because manufacturers have existing products that meet the efficacy levels. Capital conversion costs are also low at this TSL because a minimal amount of T12 machinery needs to be converted to meet the growing volume of T8 production induced by standards. The necessary conversion costs to meet TSL1 are low relative to the conversion costs for the natural market migration from T12 to T8 lamps in the base case, which helps to mitigate the impact of the standards-induced conversion costs. The positive INPV predicted in the flat markup scenario is indicative that product conversion and capital conversion outlays are also low relative to the increase in variable production costs. Whereas GSFL production is capital intensive, the capital requirements are a function primarily of the tube diameter. Efficiency standards which do not require a change in diameter will typically require a change in phosphors which is not capital intensive. Under the tiered markup scenario, manufacturers are left with a range of products after standards, so they still earn higher markups on a wide variety of premium products. In fact, the products eliminated at TSL1 are commodity products which have a lower-than-average profit margin. Thus, industry revenues and cash flows are not negatively affected, and manufacturers actually benefit from the higher prices of remaining products.

At TSL2, DOE estimated the impacts in INPV at TSL2 to range from $50 million to $63 million, equal to a 8.3 percent to 11.0 percent increase. At this level, the highest impact on cash flow in the year leading up to the standards occurs under the Emerging Technologies base case. Under this scenario, industry cash flow decreases by approximately 60 percent, to $20 million, compared to the base-case value of $50 million in the year leading up to the standards. Product conversion costs are still relatively low at TSL2, because few manufacturers will have to modify exiting products to meet this standard level. Capital conversion costs are also low at this TSL, but the investments required to meet TSL2 are larger than TSL1, because more T12 machinery needs to be converted to meet the growing volume of T8 production induced by standards. INPV is less positive at TSL2 than at TSL1, because the higher conversion costs necessary to meet TSL2 lower the mitigating impact of the conversion costs for the natural market migration from T12 to T8 lamps included in the base case. At TSL2, more of the most-efficient, higher-priced T12 lamps are shifting to less-expensive T8 lamps. INPV in the four-tier markup scenario is also not as positive, because manufacturers have fewer premium products and the profit margins on some more-efficient T12 products begin to shrink. While TSL2 eliminates some of the premium T12 lamps, the T8 lamps to which consumers must migrate still earn a higher markup.

At TSL3, the impact on INPV and cash flow depends heavily on the ability of manufacturers to differentiate products and maintain higher margins as standards move consumers to previously premium products. DOE estimated that the impacts on INPV at TSL3 range from approximately $71 million to −$139 million, equal to a 11.8 percent to −24.2 percent change. At this level, the highest impact on cash flow in the year leading up to the standards occurs under the Emerging Technologies base case. Under this scenario, industry cash flow decreases by approximately 100 percent, to $0 million, compared to the base-case value of $50 million in the year leading up to the standards. At TSL3, most manufacturers expressed concerns about the ability to maintain production volumes of T12 and T8 lamps, because all but the most efficient T12 lamps are eliminated. Because a large portion of existing T12 shipments migrate to T8, manufacturers have to convert or replace a significant portion of their T12 production lines to T8, making capital conversion costs higher at TSL3 than at TSL1 or TSL2. Conversion costs are also higher at TSL3, because manufacturers have to make more R&D expenditures to offer a full line of T12 and T8 products that meet the standard. Because TSL3 greatly accelerates the migration of T12 to T8 products, the conversion costs in the base case have a minimal effect on offsetting INPV impacts from high standards-induced conversion costs at TSL3 and all higher TSLs. If manufacturers can pass along the increased production costs of more-efficient products by differentiating the products with features such as low mercury content and longer life, they can recoup margins, thereby mitigating some of the impacts. If manufacturers can fully differentiate their products and earn the same profit margins as in the base case (the lower range of impacts), they will benefit from higher prices and INPV will be positive at this TSL. However, if manufacturers cannot differentiate their products and the margins on previously premium products begin to erode with commoditization, DOE expects manufacturer margins to be negative and the higher end of the range of negative INPV will be reached.

At TSL4, DOE estimated the impacts on INPV range from approximately −$9 million to −$195 million, equal to a −1.5 percent to −34.0 percent change. At this level, the highest impact on cash flow in the year leading up to the standards occurs under the Emerging Technologies base case. Under this scenario, industry cash flow decreases by approximately 171 percent, to −$36 million, compared to the base-case value of $50 million in the year leading up to the standards. At TSL4, there are significant conversion capital expenditures because all T12 production lines need to be converted to T8 lines; the capital requirement for this conversion is nearly double the amount needed at TSL3. The large capital costs make INPV negative even if manufacturers maintain the margin on all lamps, as in the base case. Also, manufacturers expressed concern that

the highest-grade phosphor mixtures would be necessary on most lamps to meet efficiencies prescribed by TSL4. The more-efficient phosphor blends substantially increase lamp costs, decreasing profitability if the cost increases cannot be passed on to consumers. That is, at TSL4, more T8 lamps that previously earned a premium are commoditized because the standard eliminates all T12 lamps from the market, thereby squeezing margins on all lamps and causing more negative impacts in the four-tier markup scenario.

At TSL5, DOE estimated that the impacts on INPV range from approximately $13 million to −$263 million, equal to a 2.2 percent to −45.8 percent change. At this level, the highest impact on cash flow in the year leading up to the standards occurs under the Emerging Technologies base case. Under this scenario, industry cash flow decreases by approximately 183 percent, to −$42 million, compared to the base-case value of $50 million in the year leading up to the standards. At TSL5, the necessary conversion capital is identical to TSL4 because this TSL also requires manufacturers to convert all existing T12 production to T8 production. These large costs make INPV negative even if manufacturers pass along all production cost increases to the consumer. At TSL5, all products are commoditized because all lamps must use the most efficient phosphor coatings. There are few options available for manufacturers to differentiate lamps at TSL5, thereby making it more likely that manufacturers will be negatively affected.

Based on interviews with manufacturers, DOE understands that manufacturers are constantly forced to revise their marketing strategies as new products are introduced and older products become commoditized. DOE also understands that higher efficacy is not the only feature available to differentiate premium products. Lifetime, lower mercury content, and removing lead are all features that also differentiate products. Therefore, DOE believes that after significant early disruptions in pricing, over time the industry will recover the profitability levels that existed prior to standards as manufacturers rebalance their product mix. The net effect on INPV is uncertain but should tend toward the midpoint of the two GRIM scenarios. DOE seeks comment on the ability of manufacturers to maintain these margins through the differentiation of products by other means. DOE also seeks comment on how the ability to differentiate products might vary over time.

ii. Incandescent Reflector Lamps

During the manufacturer interviews DOE learned that for IRL lamps, markups do not increase as a function of efficacy (in contrast to GSFL). Instead, manufacturers indicated that the range of potential impacts would depend on the magnitude of the capital investments required and the expected reduction in product sales. Thus, DOE modeled manufacturing impacts using all IRL shipments scenarios described in sections V.G.4.b.ii and V.G.4.b.iv. To assess the lower end of the range of potential impacts for the IRL industry, DOE considered the Existing Technologies base case reflecting the no product substitution scenario with a shift in efficacy distributions. In this scenario: (1) Manufacturers benefit from higher prices from consumers switching to more-efficient products on their own (the shift scenario); (2) IRL base-case shipments are not eroded due to emerging technologies; and (3) standards-case shipments do not decrease due to substitutions of R–CFL and exempted BR lamps for IRL. To assess the higher end of the range of potential impacts for the IRL industry, DOE considered the Emerging Technologies base case reflecting the product substitution scenario with a rollup in efficacy distributions. In this scenario: (1) IRL base-case shipments are eroded due to emerging technologies; and (2) standards-case shipments decrease due to substitutions of R–CFL and exempted BR lamps for IRL. Table VI.27 and Table VI.28 show the MIA results for each TSL for IRL under the shipment scenarios which result in the highest and lowest INPV impacts.

TABLE VI.27—MANUFACTURER IMPACT ANALYSIS FOR IRL UNDER THE EXISTING TECHNOLOGIES BASE CASE—NO PRODUCT SUBSTITUTION SCENARIO—SHIFT IN EFFICIENCY DISTRIBUTION

	Units	Base case	Trial standard level				
			1	2	3	4	5
INPV	(2007$ millions)	267	263	215	205	190	185
Change in INPV	(2007$ millions)		(4)	(52)	(62)	(77)	(82)
	(%)		−1.55%	−19.36%	−23.06%	−28.85%	−30.85%
Amended Energy Conservation Standards Product Conversion Expenses.	(2007$ millions)		$3	$3	$2	$3	$7
Amended Energy Conservation Standards Capital Conversion Expenses.	(2007$ millions)		$31	$83	$134	$166	$185
Total Investment Required	(2007$ millions)		$35	$87	$136	$170	$192

TABLE VI.28—MANUFACTURER IMPACT ANALYSIS FOR IRL UNDER THE EMERGING TECHNOLOGIES BASE CASE—PRODUCT SUBSTITUTION—ROLL-UP IN EFFICIENCY DISTRIBUTIONS

	Units	Base case	Trial standard level				
			1	2	3	4	5
INPV	(2007$ millions)	207	191	149	131	112	104
Change in INPV	(2007$ millions)		(16)	(58)	(76)	(94)	(103)
	(%)		−7.69%	−27.87%	−36.85%	−45.60%	−49.60%
Amended Energy Conservation Standards Product Conversion Expenses.	(2007$ millions)		$3	$3	$2	$3	$7
Amended Energy Conservation Standards Capital Conversion Expenses.	(2007$ millions)		$31	$83	$134	$166	$185

TABLE VI.28—MANUFACTURER IMPACT ANALYSIS FOR IRL UNDER THE EMERGING TECHNOLOGIES BASE CASE—PRODUCT SUBSTITUTION—ROLL-UP IN EFFICIENCY DISTRIBUTIONS—Continued

	Units	Base case	Trial standard level				
			1	2	3	4	5
Total Investment Required	(2007$ millions)		$35	$87	$136	$170	$192

To meet TSL1, manufacturers must replace less-efficient fill gases in the capsule with xenon. At TSL1, DOE estimated the impacts on INPV to be between −$4 million and −$16 million, or a change in INPV of between −1.6 percent and −7.7 percent. At this level, the highest impact on cash flow in the year leading up to the standards occurs under the Emerging Technologies base case. Under this scenario, the industry cash flow decreases by approximately 68 percent, to $7.1 million, compared to the base case value of $22.5 million in the year leading up to the standards. All manufacturers have a full range of products that meet this TSL. Conversion expenses are relatively low at this level because using xenon does not require substantial changes to the manufacturing process. Because the lifetimes of standards-compliant lamps do not change at TSL1, shipments in the standards cases are not further impacted by lower shipments due to higher lamp lifetimes. In fact, at this TSL, manufacturers benefit from the increased prices of standards-compliant lamps. However, this positive impact on revenues is not enough to overcome the product and capital conversion expenses, making overall INPV negative. The greater impact on shipments in the Emerging Technologies base case with product substitution drives INPV more negative.

TSL2 is based on a 6,000 hour HIR lamp, but this level may also be achieved using an improved reflector. At TSL2, the impact on INPV and cash flow depends on a manufacturer's ability to recoup the conversion capital and product conversion expenses and the extent to which shipments are reduced in the base case due to emerging technologies and in the standards case due to changes in the product mix (including lamp lifetime). DOE estimated the impacts in INPV at TSL2 to be between −$52 million and −$58 million or a change in INPV of −19.4 percent and −27.9 percent. At this level, the highest impact on cash flow in the year leading up to the standards occurs under the Emerging Technologies base case. Under this scenario, the industry cash flow decreases by approximately 172 percent, to −$16.2 million, compared to the base-case value of $22.5 million in the year leading up to the standards. At TSL2, there are negative impacts on manufacturers due to decreased shipments and significant product conversion expenses. At this TSL, conversion expenses vary greatly among manufacturers but are significant in the aggregate due to the need to increase production of HIR lamps or invest in improved reflector technology. Two manufacturers have a complete line of standards-compliant lamps but must spend a considerable amount of resources to expand production of a low-volume, premium product for mass production. Another manufacturer must spend a significant amount of capital to purchase the machinery to meet demand with exclusively higher technology (infrared) lamps in addition to replacing krypton with xenon as fill gas in the capsule. The shipment scenarios chosen account for the range in INPV. Shipments have a significant impact on INPV at this TSL in all cases because the products that meet this standard have the longest lifetimes in the standards cases, further decreasing shipments relative to the base cases. Some manufacturers have expressed concerns about competitive impacts at this TSL. One manufacturer has a patent on silverized reflectors. Another manufacturer is believed to have a cross license on the technology. Despite the large capital expense to expand this reflector technology for all baseline lamps to meet this TSL, both these manufacturers could capture market share by selling less-expensive lamps based on improved reflector coating instead of HIR technology. The other manufacturer without access to the enhanced reflectors would have to make large expenditures on capital and product conversion to produce lamps with a comparable efficacy, but at higher costs.

TSL3 is based on 3,000-hour HIR technology. DOE estimated the impacts on INPV at TSL3 to be between −$62 million and −$76 million, or a change in INPV of between −23.1 percent and −36.9 percent. At this level, the highest impact on cash flow in the year leading up to the standards occurs under the Emerging Technologies base case. Under this scenario, the industry cash flow decreases by approximately 272 percent, to −$38.6 million, compared to the base-case value of $22.5 million in the year leading up to the standards. There are significant capital conversion costs at this TSL that make INPV negative. Manufacturers must purchase additional infrared coaters to increase the production of these low-volume lamps. Since current HIR production is very small relative to standard halogen IRL, all manufacturers voiced their concerns about meeting demand at this level. Also, since all existing HIR capsules use xenon as the fill gas, manufactures are concerned about the high material costs for this gas and the potential for the price to increase over time. The high costs to convert all lamps to HIR technology drive INPV negative and strand existing equipment for standard halogen capsules. The range of INPV arises from the shipment scenarios that account for different market erosion due to emerging technology and standards inducing a switch to exempted BR lamps and R–CFL. If manufacturer concerns about consumers switching to exempted BR and R–CFL are realized in addition to emerging technology eroding the IRL market, then the higher end of the range of negative INPV will be reached.

TSL4 requires the production of an improved HIR lamp. At TSL4, DOE estimated the impacts in INPV to be between −$77 million and −$94 million, or a change in INPV of −28.9 percent and −45.6 percent. At this level, the highest impact on cash flow in the year leading up to the standards occurs under the Emerging Technologies base case. Under this scenario, the industry cash flow decreases by approximately 338 percent, to −$53.6 million, compared to the base-case value of $22.5 million in the year leading up to the standards. The significant capital and product conversion expenses at this TSL make INPV negative. At this TSL, all manufacturers must expand production of the more-efficient HIR technology to meet demand of the entire market. Since current HIR production is relatively low, these substantial costs make INPV negative. The capital conversion expenses are large because, in addition

to HIR technology, manufacturers must also use enhanced reflectors or the most efficient burners and add xenon. Also, since all existing HIR capsules use xenon as the fill gas, manufactures are concerned about the high material costs for this gas and the potential for the price to increase over time. The lifetimes of products that meet this TSL are longer than the baseline, creating a negative impact on INPV from shipments regardless of the shipment scenario selected. Manufacturers also voiced concerns about competition at TSL4. Because lamps can use an enhanced reflector with HIR to meet TSL4, manufacturers have the same competitive concerns as at TSL2. Finally, two manufacturers currently have a full line of lamps that meet TSL4. A third manufacturer has some products, but would have to undertake a costly redesign of its burners in order to sell a full line of those lamps.

TSL5 requires the production of lamps with an improved HIR coating and an additional improvement. At TSL5, DOE estimated the impacts in INPV to be between −$82 million and −$103 million, or a change in INPV of between −30.9 percent and −49.6 percent. At this level, the highest impact on cash flow in the year leading up to the standards occurs under the Emerging Technologies base case. Under this scenario, the industry cash flow decreases by approximately 381 percent, to −$63.1 million, compared to the base-case value of $22.5 million in the year leading up to the standards. The impacts at TSL5 are the most severe for manufacturers, because the capital and product conversion expenses are greatest at this TSL. At this TSL, all manufacturers must expand production of a lamp with multiple improvements over standard HIR lamps. Manufacturers must use HIR technology with an improved coating and with either enhanced reflectors or more-efficient burners. Since even standard HIR production is currently low compared to standard halogen, expanding the production of the most-efficient HIR technology to meet demand of the entire market is very costly. Due to the large conversion costs, INPV is greatly negative even if the market is not eroded by emerging technology and customers do not substitute R–CFL and exempted BR lamps for IRL. If manufacturers concerns about emerging technology and substitutions for IRL are realized, DOE expects the higher range of negative impacts to be reached (a 49.6 percent decrease in INPV).

b. Cumulative Regulatory Burden

While any one regulation may not impose a significant burden on manufacturers, DOE understands the combined effects of several existing and impending regulations may have serious consequences for some manufacturers, groups of manufacturers, or an entire industry. Assessing the impact of a single regulation may overlook this cumulative regulatory burden. For this reason, DOE conducts an analysis of cumulative regulatory burden as part of its rulemakings pertaining to appliance efficiency.

In its written comment, NEMA submitted a list of regulatory requirements that included numerous reporting requirements, the Restriction on Hazardous Substances directive (RoHS), and legislatively-prescribed minimum performance requirements that contribute to the industries' cumulative regulatory burden (NEMA, No. 22 at p 34). DOE discusses the suggested regulatory provisions submitted by NEMA in chapter 13 of the TSD.

In addition to the energy conservation standards on GSFL and IRL products, other regulations can significantly affect manufacturers' financial operations. Multiple regulations affecting the same manufacturer can quickly strain profits and possibly cause an exit from the market. Besides the list of suggested regulatory provisions that NEMA submitted, DOE also identified other regulations these manufacturers are facing for other products and equipment they manufacture within three years prior to and three years after the effective date of the amended energy conservation standards for GSFL and IRL.

DOE believes that the EISA 2007 requirements for GSIL could have the greatest cumulative burden on manufacturers of GSFL and IRL. DOE understands that manufacturers of GSFL and IRL will also incur large capital and product conversion investments to comply with the GSIL minimum efficacy standards. The GSIL investments will compete with IRL and GSFL for company resources. For example, GSFL, IRL, and GSIL all share many of the same limited engineering resources. In addition, the capital costs to comply with EISA 2007 could potentially limit the funding available for GSFL and IRL conversions because these investments will compete for the same sources of capital. DOE understands that these are important but surmountable challenges for GSFL and IRL manufacturers.

c. Impacts on Employment

To assess the impacts of energy conservation standards on GSFL and IRL direct manufacturing employment, DOE used the GRIM to estimate domestic labor expenditures and employment levels. DOE used statistical data from the U.S. Census Bureau's 2006 Annual Survey of Manufacturers (2006 ASM), results from other analyses, and interviews with manufacturers to estimate the inputs necessary to calculate industry-wide labor expenditures and employment levels. In the GRIM, total labor expenditures are a function of the labor content, the sales volume, and the wage rate which remains fixed in real terms over time. The total employment figures presented for the GSFL and IRL industries include both production and non-production workers.

DOE does not believe that standards will alter the domestic employment levels of the GSFL industry. During interviews with manufacturers, DOE learned that GSFL are produced on high-speed, fully-automated lines. Production workers are not involved in the physical assembly of the final product (*e.g.*, in inserting components, transferring partly assembled lamps, soldering lamp bases). The production workers counted in DOE's figure include plant workers involved in clearing glass, overseeing a portion of the assembly line, monitoring quality control, mixing phosphors, and moving finished products to loading. The employment levels required for these tasks are a function of the total volume of the facility, not the labor content of the product mix produced by the plant. Since higher TSLs involve using more-efficient phosphors, employment will not be impacted because standards will not change the overall scale of the facility. DOE estimates that there are approximately 1,806 U.S. production and non-production workers in the GSFL industry.

Table VI.29 and Table VI.30 show the domestic employment impacts calculated in the GRIM for the two cash flow scenarios used to bound the range of INPV impacts. The total employment figures include both production and non-production workers.

TABLE VI.29—CHANGE IN AVERAGE NUMBER OF DOMESTIC EMPLOYEES IN THE IRL INDUSTRY UNDER THE EXISTING TECHNOLOGIES BASE CASE—NO PRODUCT SUBSTITUTION SCENARIO—SHIFT IN EFFICIENCY DISTRIBUTION

	Baseline	TSL1	TSL2	TSL3	TSL4	TSL5
Average Number of Domestic IRL Employees from 2012–2042	1,319	1,518	1,303	1,492	1,396	1,426
Change in the Average Number of Domestic IRL Employees from 2012–2042	.....	199	−16	173	77	107

TABLE VI.30—CHANGE IN AVERAGE NUMBER OF DOMESTIC EMPLOYEES IN THE IRL INDUSTRY UNDER THE EMERGING TECHNOLOGIES BASE CASE—PRODUCT SUBSTITUTION SCENARIO—ROLL-UP IN EFFICIENCY DISTRIBUTION

	Baseline	TSL1	TSL2	TSL3	TSL4	TSL5
Average Number of Domestic IRL Employees from 2012–2042	699	783	623	724	617	621
Change in the Average Number of Domestic IRL Employees from 2012–2042	.....	84	−77	24	−82	−78

DOE believes that amended energy conservation standards will not significantly impact IRL direct employment. The impact that new standards will have on employment is far less significant than the potential impact from emerging technologies. Both scenarios show that the absolute magnitudes of employment impacts due to standards are small. Whether standards have a positive or negative impact on employment is largely determined by the extent to which consumers elect to substitute IRL with other lamp technologies (such as R–CFL or exempted IRL) in the standards case.

The employment impacts calculated by DOE are independent of the employment impacts from the broader U.S. economy, which are documented in chapter 15 of the TSD accompanying this notice. The employment conclusions also do not account for the possible relocation of domestic jobs to lower-labor-cost countries because the potential relocation of U.S. jobs is uncertain and highly speculative. During interviews, manufacturers did not emphasize the risk of shifting production facilities abroad.

d. Impacts on Manufacturing Capacity

DOE anticipates that amended energy conservation standards would not significantly affect the production capacity of GSFL manufacturers. For GSFL manufacturers, any necessary redesign of GSFL would not change the fundamental assembly of the equipment because higher TSLs require the use of more-efficient phosphor coatings, which are largely a materials issue. Therefore, in the long-term there should be no capacity constraints. However, higher standards would also be expected to expedite a natural conversion of T12 shipments to T8 shipments. Because most production lines are specific to lamp diameter, shifting production from T12 to T8 lamps requires shutting down the line and retooling. Based on the duration of line changes described by manufactures, DOE believes that the conversion of machinery to T8 lamp production could occur between the announcement date and the effective date of the standards. In addition, manufacturers indicated it is possible to ramp up production before shutting down a line to maintain a constant supply of shipments during retooling.

Manufacturers are concerned that IRL standards could cause capacity constraints if amended standards were to alter the assembly of standard halogen burners. In particular, IRL manufacturers are concerned about the ability to convert their equipment in time to meet an exclusively HIR standard (TSL3, TSL4, and TSL5). Although all manufacturers DOE interviewed produce lamps with infrared burners, the current volume of these lamps is many times lower than the volume of standard halogen lamps. In addition, the production of infrared capsules is much more time consuming, requiring additional time for the coating process and quality control due to the precision necessary for the technology to increase efficacy. In general, the large lamp manufacturers are concerned about their ability to increase the production volume of HIR capsules in time to meet the standard. However, interviews with suppliers of HIR capsules and coating decks suggest that the capacity could be met under an HIR standard. Based on discussions with suppliers of infrared coaters, DOE also believes that lamp manufacturers will have enough time in between the announcement date and the effective date of the standards to purchase and install the necessary coaters to meet TSL3 and higher and produce all burners in their own facilities. Independent of manufacturers' ability to install coaters to produce all infrared burners in-house, independent suppliers of infrared capsules suggested that they have the ability to supply a significant portion of the market. Because manufacturers could install additional coaters, purchase infrared burners from a supplier, and use existing excess capacity, DOE believes IRL manufacturers will be able to maintain production capacity levels and continue to meet market demand for all IRL standard levels.

e. Impacts on Manufacturer Subgroups

As discussed above, using average cost assumptions to develop an industry cash-flow estimate is inadequate for assessing differential impacts among manufacturer subgroups. Small manufacturers, niche players, and manufacturers exhibiting a cost structure that differs largely from the industry average could be affected differently. DOE used the results of the industry characterization to group manufacturers exhibiting similar characteristics.

During its interviews, DOE did not identify any small manufacturers of covered IRL, but DOE did identify one small manufacturer that produces covered GSFL.[72] This manufacturer suggested that it could be less impacted by amended energy conservation standards on GSFL than the large manufacturers. Unlike its larger competitors, the small manufacturer focuses on specialty products not covered by this rulemaking and has had

[72] DOE identified and contacted 12 businesses that could potentially be classified as small business manufacturers of the products that are the subject of this rulemaking. Four of those businesses agreed to be interviewed. Of these, DOE verified that only one of those businesses met all the criteria to be classified as a small manufacturer of covered GSFL or IRL. For further detail on DOE's inquiry regarding small manufacturers, please see section VII.B on the review under the Regulatory Flexibility Act.

a better ability to pass along product cost increases. For a discussion of the impacts on the small manufacturer, see chapter 13 of the TSD and section 0 of today's notice.

3. National Impact Analysis

a. Significance of Energy Savings

To estimate the energy savings through 2042 due to amended energy conservation standards, DOE compared the energy consumption of the lamps under the base case to the energy consumption of these products under the trial standard levels. Table VI.31 and Table VI.32 show the forecasted national energy savings (including rebound effect and HVAC interactions where applicable) in quads (quadrillion BTU) at each TSL for GSFL and IRL. As discussed in section V.E, DOE models two base-case shipment scenarios and several standards-case shipment scenarios. For each lamp type, these scenarios combined produce eight possible sets of NES results. The tables below present the results of the two scenarios that represent the maximum and minimum energy savings resulting from all the scenarios analyzed.

For GSFL, DOE presents ''Existing Technologies, High Lighting Expertise, Shift'' and ''Emerging Technologies, Market Segment-Based Lighting Expertise, Roll-Up'' in Table VI.31 as the scenarios that produce the maximum and minimum energy savings, respectively. Due to a larger reduction in the installed stock of lamps affected by standards, the Emerging Technologies base-case forecast results in lower energy savings than the Existing Technologies base-case forecast. In addition, due to a portion of consumers purchasing non-energy-saving, higher-lumen-output systems, the Market Segment-Based Lighting Expertise scenario results in lower energy savings than the High Lighting Expertise scenario. Finally, because in the Shift scenario more consumers move to higher-efficacy lamps than in the Roll-Up scenario, the Shift scenario results in higher energy savings than the Roll-Up scenario.

Table VI.31 presents total national energy savings for each TSL (labeled as ''Total'' savings). The table also reports national energy savings due to individually regulating each type of GSFL (presented next to the lamp type names), assuming no amended standard on all other lamp types. However, it is important to note that individual lamp type energy savings (due to separate regulation) do not sum to equal total energy savings achieved at the trial standard levels due to standards-induced substitution effects between lamp types. Instead, these savings are provided merely to illustrate the approximate relative energy savings of each lamp type under a TSL. As discussed in the March 2008 ANOPR, due to their relatively small shipments-based market share, DOE did not directly model the national impacts of 2-foot U-shaped lamps. In the ANOPR, DOE stated that in order to develop NES and NPV for this lamps type, it intended to scale the NIA results from other analyzed product classes. Given the similarities in historical shipment trends (showing a decrease in T12 lamps and an increase in T8 lamps) and in system input power, in this NOPR, DOE has decided to scale results from the 4-foot medium bipin product classes to approximate NES and NPV of 2-foot U-Shaped product classes. As historical shipments 4-foot medium bipin lamps were 22 times that of 2-foot U-shaped lamp shipments, DOE used this scaling factor to approximate the energy savings of 2-foot U-shaped lamps.

As seen in the tables below, the highest energy savings result from TSL 5 and from EL5 for all lamp types. In addition, DOE notes that at EL 1 and EL 2 for 4-foot medium bipin and at EL 1, EL 2, and EL 3 for 8-foot single pin slimline and 8-foot RDC HO lamps, all energy savings originate from shifts to higher-efficacy T12 lamps and voluntary early retrofits to the more-efficacious T8 systems (not applicable to 8-foot RDC HO). At these ELs, all T8 lamps are compliant and, therefore, unaffected by standards. At TSL 3, a large increase in total energy savings of GSFL can be observed, stemming from the conversion of all 40W, 4-foot MBP T12 lamps to 34W T12 lamps and also from 4-foot T8 lamps (the majority of the GSFL stock) being affected by the regulations. It is also important to note that at TSL 4 and TSL 5, all 4-foot MBP, 8-foot SP slimline, and 8-foot RDC HO T12 lamp systems would be automatically retrofitted to T8 lamp systems, because no T12 standards-compliant lamps would be available.

TABLE VI.31—SUMMARY OF CUMULATIVE NATIONAL ENERGY SAVINGS FOR GSFL

TSL/EL	Lamp type	National energy savings (quad)	
		Existing technologies, high lighting expertise, shift	Emerging technologies, market segment-based lighting expertise, roll-up
1	4-foot MBP	1.52	0.43
	8-foot SP Slimline	0.10	0.08
	8-foot RDC HO	0.18	0.02
	4-foot MiniBP SO	0.76	0.12
	4-foot MiniBP HO	1.14	0.65
	2-foot U-Shaped	0.07	0.02
	Total	3.77	1.32
2	4-foot MBP	1.57	0.60
	8-foot SP Slimline	0.13	0.11
	8-foot RDC HO	0.24	0.20
	4-foot MiniBP SO	0.76	0.12
	4-foot MiniBP HO	1.14	0.65
	2-foot U-Shaped	0.07	0.03
	Total	3.90	1.70
3	4-foot MBP	4.76	1.99

TABLE VI.31—SUMMARY OF CUMULATIVE NATIONAL ENERGY SAVINGS FOR GSFL—Continued

TSL/EL	Lamp type	National energy savings (quad)	
		Existing technologies, high lighting expertise, shift	Emerging technologies, market segment-based lighting expertise, roll-up
	8-foot SP Slimline	0.18	0.17
	8-foot RDC HO	0.25	0.20
	4-foot MiniBP SO	0.76	0.12
	4-foot MiniBP HO	1.14	0.65
	2-foot U-Shaped	0.22	0.09
	Total	7.33	3.24
4	4-foot MBP	8.23	2.70
	8-foot SP Slimline	0.38	0.23
	8-foot RDC HO	0.66	0.66
	4-foot MiniBP SO	0.76	0.12
	4-foot MiniBP HO	1.14	0.65
	2-foot U-Shaped	0.37	0.12
	Total	11.64	4.49
5	4-foot MBP	9.53	3.72
	8-foot SP Slimline	0.38	0.25
	8-foot RDC HO	0.72	0.67
	4-foot MiniBP SO	0.91	0.29
	4-foot MiniBP HO	1.14	0.65
	2-foot U-Shaped	0.43	0.17
	Total	13.17	5.75

For IRL, DOE presents ''Existing Technologies, Product Substitution, Shift'' and ''Emerging Technologies, No Product Substitution, Roll-Up'' in Table VI.32 as the scenarios that produce the maximum and minimum energy savings, respectively. Similar to GSFL, the Existing Technologies base-case forecast results in higher energy savings than the Emerging Technologies base-case forecast due to the greater installed stock of IRL affected by standards. Also, although a relatively small difference, the Product Substitution scenario (including migration to both higher-efficacy R–CFL and lower-efficacy, exempted BR lamps) results in marginally higher energy savings than the No Product Substitution scenario. In addition, while the effect is greater for GSFL than for IRL, the Shift scenario (only affecting commercial consumers) also represents higher energy savings than the Roll-Up scenario for IRL. As seen in the table below, TSL 5 achieves maximum energy savings for both scenarios.

TABLE VI.32—SUMMARY OF CUMULATIVE NATIONAL ENERGY SAVINGS FOR INCANDESCENT REFLECTOR LAMPS

TSL	National energy savings (quads)	
	Existing technologies, product substitution, shift	Emerging technologies, no product substitution, roll-up
1	0.37	0.22
2	1.06	0.52
3	1.89	1.00
4	2.32	1.25
5	2.60	1.48

b. Net Present Value

The NPV analysis is a measure of the cumulative benefit or cost of standards to the Nation. In accordance with the OMB's guidelines on regulatory analysis,[73] DOE calculated NPV using both a 7-percent and a 3-percent real discount rate. The 7-percent rate is an estimate of the average before-tax rate of return to private capital in the U.S. economy, and reflects the returns to real estate and small business capital, as well as corporate capital. DOE used this discount rate to approximate the opportunity cost of capital in the private sector, because recent OMB analysis has found the average rate of return to capital to be near this rate. DOE also used the 3-percent rate to capture the potential effects of standards on private consumption (*e.g.*, through higher prices for equipment and the purchase of reduced amounts of energy). This rate represents the rate at which society discounts future consumption flows to

[73] OMB Circular A–4, section E (Sept. 17, 2003).

their present value. This rate can be approximated by the real rate of return on long-term government debt (*i.e.*, yield on Treasury notes minus annual rate of change in the Consumer Price Index), which has averaged about 3 percent on a pre-tax basis for the last 30 years.

The table below shows the forecasted net present value at each trial standard level for GSFL and IRL. Similar to the results presented for NES, Table VI.33 DOE presents the ''Existing Technologies, High Lighting Expertise, Shift'' scenario and the ''Emerging Technologies, Market Segment-Based Lighting Expertise, Roll Up'' scenario as the maximum and minimum NPVs for GSFL, respectively. In general, the NPV results at each trial standard level are a reflection of the life-cycle cost savings at the corresponding efficacy levels. As seen in section VI.B.1.a.i for most lamp purchasing events and most baseline lamps, increasing efficacy levels generally result in increased LCC savings. Due to this general cost-effectiveness of higher-efficacy GSFL, the Existing Technologies base-case forecast (which increases the affected stock and shipments) and the Shift scenario (which results in the shipment of more high-efficacy lamps) represent the high-range scenario for NPV. The Market Segment-Based Lighting Expertise scenario models consumers who purchase higher-first-cost lamps, but may not achieve energy savings. As these consumers generally have overall lower NPV (and often negative NPV) than their energy-saving counterparts, the Market Segment-Based Lighting Expertise scenario results in lower NPV than the High Lighting Expertise scenario.

As seen in Table VI.33, NPV generally increases with increasing trial standard levels, consistent with the same trend in the LCC results. For the Market Segment-Based Lighting Expertise scenario, due to a large lack of lighting expertise in the residential sector (DOE assumes 0 percent consumers conducting T12 fixture replacements have high lighting expertise), the NPV from 4-foot medium bipin lamps is negative at EL1 and EL2. At efficacy levels above EL2, 4-foot medium bipin lamps achieve positive NPV due to the integration of more-efficacious T8 lamps into both commercial stocks (where lighting sophistication is higher) and residential stocks. In addition, the Emerging Technologies, Market Segment-Based Lighting Expertise, Roll-Up scenario shows decreased NPV from TSL4 to TSL5. This is primarily due to the portion of consumers (without lighting expertise) that are forced to purchase much higher cost lamps, but do not take advantage of the energy savings they provide.

TABLE VI.33—SUMMARY OF CUMULATIVE NET PRESENT VALUE FOR GSFL

TSL/EL	Product class	NPV (billion 2007$)			
		Existing technologies, high lighting expertise, shift		Emerging technologies, market segment-based lighting expertise, roll-up	
		7% Discount	3% Discount	7% Discount	3% Discount
1	4-foot MBP	3.93	9.04	−0.01	0.73
	8-foot SP Slimline	0.10	0.34	0.03	0.21
	8-foot RDC HO	0.35	0.60	−0.17	−0.24
	4-foot MiniBP SO	1.11	2.70	0.05	0.19
	4-foot MiniBP HO	1.46	3.38	0.81	1.91
	2-foot U-Shaped	0.18	0.41	0.00	0.03
	Total	7.12	16.46	0.71	2.82
2	4-foot MBP	3.14	7.78	−0.35	0.52
	8-foot SP Slimline	0.15	0.45	0.09	0.35
	8-foot RDC HO	0.43	0.73	0.53	0.87
	4-foot MiniBP SO	1.11	2.70	0.05	0.19
	4-foot MiniBP HO	1.46	3.38	0.81	1.91
	2-foot U-Shaped	0.14	0.35	−0.02	0.02
	Total	6.43	15.39	1.11	3.85
3	4-foot MBP	7.56	17.53	1.79	5.58
	8-foot SP Slimline	0.37	0.81	0.37	0.80
	8-foot RDC HO	0.12	0.26	0.06	0.14
	4-foot MiniBP SO	1.11	2.70	0.05	0.19
	4-foot MiniBP HO	1.46	3.38	0.81	1.91
	2-foot U-Shaped	0.34	0.80	0.08	0.25
	Total	11.09	25.67	3.23	8.98
4	4-foot MBP	17.47	35.93	5.97	13.34
	8-foot SP Slimline	0.87	1.89	0.38	0.97
	8-foot RDC HO	1.33	2.53	1.33	2.53
	4-foot MiniBP SO	1.11	2.70	0.05	0.19
	4-foot MiniBP HO	1.46	3.38	0.81	1.91
	2-foot U-Shaped	0.79	1.63	0.27	0.61
	Total	23.37	48.61	8.85	19.59
5	4-foot MBP	18.37	38.56	5.53	12.80
	8-foot SP Slimline	0.87	1.89	0.45	1.11
	8-foot RDC HO	1.38	2.62	1.28	2.46
	4-foot MiniBP SO	1.45	3.46	0.23	0.69

TABLE VI.33—SUMMARY OF CUMULATIVE NET PRESENT VALUE FOR GSFL—Continued

TSL/EL	Product class	NPV (billion 2007$)			
		Existing technologies, high lighting expertise, shift		Emerging technologies, market segment-based lighting expertise, roll-up	
		7% Discount	3% Discount	7% Discount	3% Discount
	4-foot MiniBP HO	1.46	3.38	0.81	1.91
	2-foot U-Shaped	0.83	1.75	0.25	0.58
	Total	24.49	51.90	8.54	19.53

For IRL, DOE presents the ''Existing Technologies, Product Substitution, Shift'' and ''Emerging Technologies, No Product Substitution, Roll-Up'' scenarios as the maximum and minimum NPVs, respectively. As seen in Table VI.34, NPV increases with TSL, consistent with LCC savings generally increasing with efficacy level. In particular, for the No Product Substitution scenario, the negative NPV at TSL1 results because the life-cycle cost savings at EL1 (the associated EL) are primarily negative. However, as seen in the Product Substitution scenario, TSL1 achieves positive NPV due to primarily the increased movement to highly cost-effective R–CFLs. NPV results are the most positive at TSL5, because the most cost-effective IRL lamp is purchased at this TSL.

TABLE VI.34—SUMMARY OF CUMULATIVE NET PRESENT VALUE FOR INCANDESCENT REFLECTOR LAMPS

TSL	NPV (billion 2007$)			
	Existing technologies, product substitution, shift		Emerging technologies, no product substitution, roll-up	
	7% Discount rate	3% Discount rate	7% Discount rate	3% Discount rate
1	0.19	0.55	−0.06	0.00
2	3.47	7.11	1.82	3.71
3	4.75	9.85	2.58	5.30
4	6.75	13.97	3.72	7.68
5	7.52	15.55	4.34	8.99

c. Impacts on Employment

In addition to considering the direct employment impacts for the manufacturers of products covered in this rulemaking (discussed above), DOE also develops estimates of the indirect employment impacts of proposed standards on the economy in general. As noted previously, DOE expects energy conservation standards for the GSFL and IRL covered by these standards to reduce energy bills for consumers, with the resulting net savings being redirected to other forms of economic activity. DOE also realizes that these shifts in spending and economic activity could affect the demand for labor. To estimate these effects, DOE used an input/output model of the U.S. economy using BLS data (see section V.H). See chapter 15 of the TSD accompanying this notice for details.

This input/output model suggests the proposed standards are likely to slightly increase the net demand for labor in the economy. Neither the BLS data nor the input/output model DOE uses includes the quality or wage level of the jobs. As Table VI.35 and Table VI.36 show, the net increase in jobs due to standards for GSFL and IRL, respectively, is so small that it would likely be imperceptible in national labor statistics and might be offset by other, unanticipated effects on employment.

TABLE VI.35—NET NATIONAL CHANGE IN INDIRECT EMPLOYMENT FOR GSFL, JOBS IN 2042

Trial standard level	Net national change in jobs (thousands)	
	Existing technologies, shift, high lighting expertise	Emerging technologies, roll up, market segment based lighting expertise
1	15.4	5.2
2	15.2	5.7
3	21.6	10.1
4	27.6	13.3
5	32.4	15.2

TABLE VI.36—NET NATIONAL CHANGE IN INDIRECT EMPLOYMENT FOR IRL, JOBS IN 2042

Trial standard level	Net national change in jobs (thousands)	
	Existing technologies, product substitution, shift	Emerging technologies, no product substitution, roll up
1	1.4	0.9
2	3.5	2.9
3	5.8	5.2
4	7.5	6.9
5	8.2	7.8

4. Impact on Utility or Performance of Products

As discussed in section IV.D.1.d of this notice, DOE concluded that none of the efficacy levels considered in this notice would reduce the utility or performance of the GSFL and IRL under consideration in this rulemaking. (42 U.S.C. 6295(o)(2)(B)(i)(IV)). Furthermore, manufacturers of these products currently offer GSFL and IRL that meet or exceed the proposed standards.

5. Impact of Any Lessening of Competition

DOE considers any lessening of competition likely to result from standards. The Attorney General determines the impact, if any, of any lessening of competition likely to result from a proposed standard, and transmits such determination to the Secretary, together with an analysis of the nature and extent of such impact. (42 U.S.C. 6295(o)(2)(B)(i)(V) and (B)(ii)).

To assist the Attorney General in making such a determination, DOE has provided DOJ with copies of this notice and the TSD for review. DOE will consider DOJ's comments on the proposed rule in preparing the final rule. In the final rule, DOE will publish the Attorney General's written determination and respond accordingly.

6. Need of the Nation To Conserve Energy

An improvement in the energy efficiency of GSFL and IRL is likely to improve the security of the Nation's energy system by reducing overall demand for energy, thereby reducing the Nation's reliance on foreign sources of energy. Reduced demand could improve the reliability of the electricity system, particularly in the short run during peak-load periods. As a measure of this reduced demand, DOE expects the energy savings from the proposed standards to eliminate the need for approximately 1100 to 3400 megawatts (MW) of generating capacity for GFSL and up to 450 MW for IRL by 2042.

Enhanced energy efficiency also produces environmental benefits. The expected energy savings from higher standards would reduce the emissions of air pollutants and greenhouse gases associated with electric energy production and may reduce the cost of maintaining nationwide emissions standards and constraints. Table VI.37 and Table VI.38 show cumulative CO_2, NO_X, and Hg emissions reductions for GSFL and IRL by TSL over the rulemaking period.

TABLE VI.37—SUMMARY OF EMISSIONS REDUCTIONS FOR GSFL

[Cumulative reductions for products sold from 2012 to 2042]

		TSL1	TSL2	TSL3	TSL4	TSL5
Existing Technologies, Shift, High Lighting Expertise						
CO_2 (MMt)		236.4	233.7	395.2	597.7	679.7
NO_X (kt)	low	14	15	25	39	43
NO_X (kt)	high	347	361	623	951	1,072
Hg (t)	low	0.0	0.0	0.0	0.0	0.0
Hg (t)	high	4.2	3.8	6.9	7.9	9.1
Emerging Technologies, Roll Up, Market Segment Based Lighting Expertise						
CO_2 (MMt)		85.7	103.5	184.3	239.7	312.8
NO_X (kt)	low	5	7	12	17	20
NO_X (kt)	high	127	167	289	407	503
Hg (t)	low	0.0	0.0	0.0	0.0	0.0
Hg (t)	high	1.5	1.5	2.9	3.2	4.4

TABLE VI.38—SUMMARY OF EMISSIONS REDUCTIONS FOR IRL

[Cumulative reductions for products sold from 2012 to 2042]

		TSL1	TSL2	TSL3	TSL4	TSL5
Existing Technologies, Product Substitution, Shift						
CO_2 (MMt)		17.7	44.8	88.1	114.4	118.8
NO_X (kt)	low	1	3	6	7	8
NO_X (kt)	high	29	78	141	181	193

TABLE VI.38—SUMMARY OF EMISSIONS REDUCTIONS FOR IRL—Continued

[Cumulative reductions for products sold from 2012 to 2042]

		TSL1	TSL2	TSL3	TSL4	TSL5
Hg (t)	low	0.0	0.0	0.0	0.0	0.0
Hg (t)	high	0.2	0.6	1.3	1.7	1.7
Emerging Technologies, No Product Substitution, Roll Up						
CO_2 (MMt)		10.3	25.1	46.2	58.6	79.3
NO_X (kt)	low	1	2	3	4	1
NO_X (kt)	high	17	39	75	94	17
Hg (t)	low	0.0	0.0	0.0	0.0	0.0
Hg (t)	high	0.1	0.3	0.6	0.8	1.3

MMt = million metric tons.
kt = thousand metric tons.
t = metric tons.
NOTE: The derivation for the emission ranges are described below.

The estimated cumulative CO_2, NO_X, and Hg emissions reductions for the proposed amended energy conservation standards range up to a maximum of 680 MMt for CO_2, 1072 kt for NO_X, and 9.1 metric tons for Hg for GSFL and 119 MMt for CO_2, 193 kt for NO_X and 1.7 tons for Hg for IRL over the period from 2012 to 2042. In the Environmental Assessment (see the Environmental Assessment report of the TSD), DOE reports estimated annual changes in CO_2, NO_X, and Hg emissions attributable to each TSL. As discussion in section V.J of this NOPR, DOE does not report SO_2 emissions reduction from power plants because reductions from an energy conservation standard would not affect the overall level of SO_2 emissions in the United States due to the emissions caps for SO_2.

The NEMS–BT modeling assumed that NO_X would be subject to the Clean Air Interstate Rule (CAIR) issued by the U.S. Environmental Protection Agency on March 10, 2005.[74] 70 FR 25162 (May 12, 2005). On July 11, 2008, the U.S. Court of Appeals for the District of Columbia Circuit (DC Circuit) issued its decision in *North Carolina* v. *Environmental Protection Agency*,[75] in which the court vacated the CAIR. If left in place, the CAIR would have permanently capped emissions of NO_X in 28 eastern States and the District of Columbia. As with the SO_2 emissions cap, a cap on NO_X emissions would have meant that energy conservation standards are not likely to have a physical effect on NO_X emissions in States covered by the CAIR caps. While the caps would have meant that physical emissions reductions in those States would not have resulted from the energy conservation standards that DOE is proposing today, the standards might have produced an environmental-related economic impact in the form of lower prices for emissions allowance credits, if large enough. DOE notes that the estimated total reduction in NO_X emissions, including projected emissions or corresponding allowance credits in States covered by the CAIR cap was insignificant and too small to affect allowance prices for NO_X under the CAIR.

Even though the DC Circuit vacated the CAIR, DOE notes that the DC Circuit left intact EPA's 1998 NO_X SIP Call rule, which capped seasonal (summer) NO_X emissions from electric generating units and other sources in 23 jurisdictions and gave those jurisdictions the option to participate in a cap and trade program for those emissions. 63 FR 57356, 57359 (Oct. 27, 1998).[76] DOE notes that the SIP Call rule may provide a similar, although smaller in extent, regional cap and may limit actual reduction in NO_X emissions from revised standards occurring in States participating in the SIP Call rule. However, the possibility that the SIP Call rule may have the same effect as CAIR is highly uncertain. Therefore, DOE established a range of NO_X reductions due to the standards being considered in today's proposed rule. DOE's low estimate was based on the emission rate of the cleanest new natural gas combined-cycle power plant available for electricity generated based on the assumption that efficiency standards would result in only the cleanest available fossil-fueled generation being displaced. DOE used the emission rate, specified in 0.0310 kilotons (0.0341 thousand short tons) of NO_X emitted per TWh of electricity generated, associated with an advanced natural gas combined-cycle power plant, as specified by NEMS–BT. To estimate the reduction in NO_X emissions, DOE multiplied this emission rate by the reduction in electricity generation due to the amended energy conservation standards considered. DOE's high estimate of 0.764 kilotons (0.843 thousand short tons) of NO_X per TWh was based on the use of a nationwide NO_X emission rate for all electrical generation. Use of such an emission rate assumes that future efficiency standards would result in displaced electrical generation mix that is equivalent to today's mix of power plants (*i.e.*, future power plants displaced are no cleaner than what are being used currently to generate electricity). In addition, under the high estimate assumption, energy conservation standards would have little to no effect on the generation mix.

[74] On December 23, 2008, the D.C. Circuit decided to allow CAIR to remain in effect until it is replaced by a rule consistent with the court's earlier opinion. *North Carolina* v. *EPA*, No. 05–1244, 2008 WL 5335481 (DC Cir. Dec. 23, 2008). Neither the July 11, 2008 nor the December 23, 2008 decisions of the D.C. Circuit change the standard-setting proposals reached in this rule. See *http://www.epa.gov/cleanairinterstaterule*.

[75] 531 F.3d 896 (D.C. Cir. 2008).

[76] In the NO_X SIP Call rule, EPA found that sources in the District of Columbia and 22 ''upwind'' States (States) were emitting NO_X (an ozone precursor) at levels that significantly contributed to ''downwind'' States not attaining the ozone NAAQS or at levels that interfered with States in attainment maintaining the ozone NAAQS. In an effort to ensure that ''downwind'' States attain or continue to attain the ozone NAAQS, EPA established a region-wide cap for NO_X emissions from certain large combustion sources and set a NO_X emissions budget for each State. Unlike the cap that CAIR would have established, the NO_X SIP Call Rule's cap only constrains seasonal (summer time) emissions. In order to comply with the NO_X SIP Call Rule, States could elect to participate in the NO_X Budget Trading Program. Under the NO_X Budget Trading Program, each emission source is required to have one allowance for each ton of NO_X emitted during the ozone season. States have flexibility in how they allocate allowances through their State Implementation Plans but States must remain within the EPA-established budget. Emission sources are allowed to buy, sell, and bank NO_X allowances as appropriate. It should be noted that, on April 16, 2008, EPA determined that Georgia is no longer subject to the NO_X SIP Call rule. 73 FR 21528 (April 22, 2008).

Based on *AEO2008* for a recent year (2006) in which no regulatory or non-regulatory measures were in effect to limit NO_X emissions, DOE multiplied this emission rate by the reduction in electricity generation due to the standards considered. DOE is considering whether changes are needed to its plan for addressing the issue of NO_X reduction. DOE invites public comment on how the agency should address this issue, including how it might value NO_X emissions for States now that the CAIR has been vacated.[77]

The range in NO_X emission changes calculated under using the low- and high-estimate scenarios are shown in Table VI.37 and Table VI.38 by TSL. The range of total cumulative NO_X emission reductions is from 5 to 1071 kt for GSFL and 1 to 193 kt for IRL for the range of TSLs considered. These changes in NO_X emissions are extremely small, at less than 0.1 percent of the national base-case emissions forecast by NEMS–BT, depending on the TSL.

As noted above in section V.J, with regard to Hg emissions, DOE is able to report an estimate of the physical quantity changes in these emissions associated with an energy conservation standard. As opposed to using the NEMS–BT model, DOE established a range of Hg rates to estimate the Hg emissions that could be reduced from standards. DOE's low estimate was based on the assumption that future standards could displace electrical generation from natural gas-fired power plants as the cleanest possible fossil-fueled generation displacement consistent with the low end of range established for NO_X emissions, thereby resulting in an effective emission rate of zero. The low-end emission rate is zero because virtually all Hg emitted from electricity generation is from coal-fired power plants. Based on an emission rate of zero, no emissions would be reduced from energy conservation standards. DOE's high estimate was based on the use of a nationwide mercury emission rate from *AEO2008*. Because power plant emission rates are a function of local regulation, scrubbers, and the mercury content of coal, it is extremely difficult to come up with a precise high-end emission rate. Therefore, DOE believes that the most reasonable estimate is based on the assumption that all displaced coal generation would have been emitting at the average emission rate for coal generation as specified by *AEO2008*. As noted previously, because virtually all mercury emitted from electricity generation is from coal-fired power plants, DOE based the emission rate on the tons of mercury emitted per TWh of coal-generated electricity. Based on the emission rate for a recent year (2006), DOE derived a high-end emission rate of 0.023 metric tons (0.0255 short tons) per TWh. To estimate the reduction in mercury emissions, DOE multiplied the emission rate by the reduction in coal-generated electricity due to the standards considered as determined in the utility impact analysis. The estimated changes in Hg emissions are shown in Table VI.37 for both GSFL and IRL from 2012 to 2042. The range of total Hg emission reductions is from 0 to 9.1 tons for GSFL and 0 to 1.7 tons for IRL for the range of TSLs considered. These changes in Hg emissions are extremely small, generally being less than 0.1 percent of the national base-case emissions forecast by NEMS–BT, depending on the TSL.

The NEMS–BT model used for today's rulemaking could not be used to estimate Hg emission reductions due to standards, as it assumed that Hg emissions would be subject to EPA's Clean Air Mercury Rule[78] (CAMR), which would have permanently capped emissions of mercury for new and existing coal-fired plants in all States by 2010. Similar to SO_2 and NO_X, DOE assumed that under such a system, energy conservation standards would have resulted in no physical effect on these emissions, but might have resulted in an environmental-related economic benefit in the form of a lower price for emissions allowance credits, if large enough. DOE estimated that the change in the Hg emissions from energy conservation standards would not be large enough to influence allowance prices under CAMR.

On February 8, 2008, the DC Circuit issued its decision in *New Jersey* v. *Environmental Protection Agency*,[79] in which the DC Circuit, among other actions, vacated the CAMR referenced above. Accordingly, DOE is considering whether changes are needed to its plan for addressing the issue of mercury emissions in light of the DC Circuit's decision. DOE invites public comment on addressing mercury emissions in this rulemaking.

In today's proposed rule, DOE is taking into account a monetary benefit of CO_2 emission reductions associated with this rulemaking. To put the potential monetary benefits from reduced CO_2 emissions into a form that is likely to be most useful to decision-makers and stakeholders, DOE used the same methods used to calculate the net present value of consumer cost savings: the estimated year-by-year reductions in CO_2 emissions were converted into monetary values and these resulting annual values were then discounted over the life of the affected appliances to the present using both 3 percent and 7 percent discount rates.

These estimates discussed below are based on a previous analysis that used a range of no benefit to an average benefit value reported by the IPCC.[80] It is important to note that the IPCC estimate used as the upper bound value was derived from an estimate of the mean value of worldwide impacts from potential climate impacts caused by CO_2 emissions, and not just the effects likely to occur within the United States. This previous analysis assumed that the appropriate value should be restricted to a representation of those costs/benefits likely to be experienced in the United States. DOE expects that such domestic values would be lower than comparable global values; however, there currently are no consensus estimates for the U.S. benefits likely to result from CO_2 emission reductions. Because U.S.-specific estimates were not available, and DOE did not receive any additional information that would help serve to narrow the proposed range as a representative range for domestic U.S. benefits, DOE believes it is appropriate to propose the global mean value as an appropriate upper bound U.S. value for purposes of the sensitivity analysis.

As already discussed in section V.J, DOE received a comment on the March 2008 ANOPR in the present rulemaking for estimating the value of CO_2 emissions reductions. The Joint

[77] In anticipation of CAIR replacing the NO_X SIP Call Rule, many States adopted sunset provisions for their plans implementing the NO_X SIP Call Rule. The impact of the NO_X SIP Call Rule on NO_X emissions will depend, in part, on whether these implementation plans are reinstated.

[78] 70 FR 28606 (May 18, 2005).

[79] 517 F.3d 574 (D.C. Cir. 2008).

[80] During the preparation of its most recent review of the state of climate science, the Intergovernmental Panel on Climate Change (IPCC) identified various estimates of the present value of reducing carbon-dioxide emissions by one ton over the life that these emissions would remain in the atmosphere. The estimates reviewed by the IPCC spanned a range of values. In the absence of a consensus on any single estimate of the monetary value of CO_2 emissions, DOE used the estimates identified by the study cited in Summary for Policymakers prepared by Working Group II of the IPCC's Fourth Assessment Report to estimate the potential monetary value of CO_2 reductions likely to result from standards finalized in this rulemaking. According to IPCC, the mean social cost of carbon (SCC) reported in studies published in peer-reviewed journals was $43 per ton of carbon. This translates into about $12 per ton of carbon dioxide. The literature review (Tol 2005) from which this mean was derived did not report the year in which these dollars were denominated. However, we understand this estimate was denominated in 1995 dollars. Updating that estimate to 2007 dollars yields a SCC of $15 per ton of carbon dioxide.

Comment argued for assigning an economic value to CO_2 emissions. DOE's approach for assigning a range to the dollars per ton of CO_2 emissions recognizes and addresses the concerns of the Joint Comment.

The Department of Energy, together with other Federal agencies, is currently reviewing various methodologies for estimating the monetary value of reductions in CO_2 and other greenhouse gas emissions. This review will consider the comments on this subject that are part of the public record for this and other rulemakings, as well as other methodological assumptions and issues, such as whether the appropriate values should represent domestic U.S. or global benefits (and costs). Given the complexity of the many issues involved, this review is ongoing. However, consistent with DOE's legal obligations, and taking into account the uncertainty involved with this particular issue, DOE has included in this rulemaking the values and analyses previously conducted.

Given the uncertainty surrounding estimates of the societal cost of carbon (SCC), DOE previously concluded that relying on any single study may be inadvisable since its estimate of the SCC will depend on many assumptions made by its authors. The Working Group II's contribution to the Fourth Assessment Report of the IPCC notes that:

> The large ranges of SCC are due in the large part to differences in assumptions regarding climate sensitivity, response lags, the treatment of risk and equity, economic and non-economic impacts, the inclusion of potentially catastrophic losses, and discount rates.[81]

Because of this uncertainty, DOE previously relied on Tol (2005), which was presented in the IPCC's Fourth Assessment Report, and was a comprehensive meta-analysis of estimates for the value of SCC. As a result, DOE previously decided to rely on the Tol study reported by the IPCC as the basis for its analysis.

DOE continues to believe that the most appropriate monetary values for consideration in the development of efficiency standards are those drawn from studies that attempt to estimate the present value of the marginal economic benefits likely to result from reducing greenhouse gas emissions, rather than estimates that are based on the market value of emission allowances under existing cap and trade programs or estimates that are based on the cost of reducing emissions—both of which are largely determined by policy decisions that set the timing and extent of emission reductions and do not necessarily reflect the benefit of reductions. DOE also believes that the studies it relies upon generally should be studies that were the subject of a peer review process and were published in reputable journals.

In today's NOPR, DOE is essentially proposing to continue to use the range of values based on the values presented in Tol (2005). Additionally, DOE has applied an annual growth rate of 2.4% to the value of SCC, as suggested by the IPCC Working Group II (2007, p. 822), based on estimated increases in damages from future emissions reported in published studies. Because the values in Tol (2005) were presented in 1995 dollars, DOE is assigning a range for the SCC of $0 to $20 ($2007) per ton of CO_2 emissions.

DOE is proposing to use the median estimated social cost of CO_2 as an upper bound of the range. This value is based on Tol (2005), which reviewed 103 estimates of the SCC from 28 published studies, and concluded that when only peer-reviewed studies published in recognized journals are considered, ''that climate change impacts may be very uncertain but [it] is unlikely that the marginal damage costs of carbon dioxide emissions exceed $50 per ton carbon [comparable to a 2007 value of $20 per ton carbon dioxide when expressed in 2007 U.S. dollars with a 2.4% growth rate].''

In proposing a lower bound of $0 for the estimated range, DOE's previous analysis agreed with the IPCC Working Group II (2007) report that ''significant warming across the globe and the locations of significant observed changes in many systems consistent with warming is very unlikely to be due solely to natural variability of temperatures or natural variability of the systems'' (pp. 9), and, thus, tentatively concluded that a global value of zero for reducing emissions cannot be justified. However, DOE previously tentatively concluded that it is reasonable to allow for the possibility that the U.S. portion of the global cost of carbon dioxide emissions may be quite low. In fact, some of the studies looked at in Tol (2005) reported negative values for the SCC. DOE assumed that it would be most appropriate to use U.S. benefit values, and not world benefit values, in its analysis, and, further, that U.S. domestic values will be lower than the global values. As indicated above, DOE, together with other Federal agencies, is now reviewing whether this previous analysis should be modified.

The resulting estimates of the potential range of net present value benefits associated with the reduction of CO_2 emissions are reflected in Table VI.39 and Table VI.40.

TABLE VI.39—PRELIMINARY ESTIMATES OF SAVINGS FROM CO_2 EMISSIONS REDUCTIONS FOR GSFL

TSL	Estimated cumulative CO_2 (MMt) emission reductions	Value of estimated CO_2 emission reductions (billion 2007$) at 7% discount rate	Value of estimated CO_2 emission reductions (billion 2007$) at 3% discount rate
1	85.7 to 236.4	$0 to $1.2	$0 to $2.5
2	103.5 to 233.7	$0 to $1.2	$0 to $2.5.
3	184.3 to 395.2	$0 to $2.1	$0 to $4.3.
4	239.7 to 597.7	$0 to $3.5	$0 to $6.8.
5	312.8 to 679.7	$0 to $4.0	$0 to $7.7.

TABLE VI.40—PRELIMINARY ESTIMATES OF SAVINGS FROM CO_2 EMISSIONS REDUCTIONS FOR IRL

TSL	Estimated cumulative CO_2 (MMt) emission reductions	Value of estimated CO_2 emission reductions (billion 2007$) at 7% discount rate	Value of estimated CO_2 emission reductions (billion 2007$) at 3% discount rate
1	10.3 to 17.7	$0 to $0.1	$0 to $0.2.
2	25.1 to 44.8	$0 to $0.3	$0 to $0.5.

[81] *Climate Change 2007—Impacts, Adaptation and Vulnerability*. Contribution of Working Group II to the Fourth Assessment Report of the IPCC, 17. *Available at http://www.ipcc-wg2.org* (last accessed Aug. 7, 2008).

TABLE VI.40—PRELIMINARY ESTIMATES OF SAVINGS FROM CO_2 EMISSIONS REDUCTIONS FOR IRL—Continued

TSL	Estimated cumulative CO_2 (MMt) emission reductions	Value of estimated CO_2 emission reductions (billion 2007$) at 7% discount rate	Value of estimated CO_2 emission reductions (billion 2007$) at 3% discount rate
3	46.2 to 88.1	$0 to $0.5	$0 to $1.0.
4	58.6 to 114.4	$0 to $0.6	$0 to $1.3.
5	79.3 to 118.8	$0 to $0.7	$0 to $1.3.

DOE also investigated the potential monetary impact resulting from the impact of today's energy conservation standards on SO_2, NO_X, and Hg emissions. As previously stated, DOE's initial analysis assumed the presence of nationwide emission caps on SO_2 and Hg, and caps on NO_X emissions in the 28 States covered by the CAIR caps. In the presence of these emissions caps, DOE concluded that no physical reductions in power sector emissions would likely occur; however, the lower generation requirements associated with energy conservation standards could potentially put downward pressure on the prices of emissions allowances in cap-and-trade markets. Estimating this effect is very difficult because of factors such as credit banking, which can change the trajectory of prices. DOE has further concluded that the effect from energy conservation standards on SO_2 allowance prices is likely to be negligible, based upon runs of the NEMS–BT model. See Environmental Assessment report of the TSD for further details regarding SO_2 allowance price impacts.

As discussed earlier, with respect to NO_X, the CAIR rule had been vacated by the courts, so projected annual NO_X allowances from NEMS–BT were no longer relevant. In DOE's subsequent analysis, NO_X emissions were not controlled by a nationwide regulatory system. For the range of NO_X reduction estimates (and Hg reduction estimates), DOE estimated the national monetized benefits of emissions reductions from today's proposed rule based on environmental damage estimates from the literature. Available estimates suggest a very wide range of monetary values for NO_X emissions, ranging from $370 per ton to $3,800 per ton of NO_X from stationary sources, measured in 2001 dollars [82] or a range of $432 per ton to $4,441 per ton in 2007 dollars. As discussed above, DOE is considering how it should address the issue of NO_X reduction and corresponding monetary valuation. DOE invites public comment on how the agency should address this issue.

DOE has already conducted research for today's NOPR and determined that the basic science linking mercury emissions from power plants to impacts on humans is considered highly uncertain. However, DOE identified two estimates of the environmental damages of mercury based on two estimates of the adverse impact of childhood exposure to methyl mercury on IQ for American children, and subsequent loss of lifetime economic productivity resulting from these IQ losses. The high-end estimate is based on an estimate of the current aggregate cost of the loss of IQ in American children that results from exposure to mercury of U.S. power plant origin ($1.3 billion per year in year 2000$), which works out to $32.6 million per ton emitted per year (2007$).[83] The low-end estimate was $664,000 per ton emitted in 2004$ or $729,000 per ton in 2007$, which DOE derived from a published evaluation of mercury control using different methods and assumptions from the first study, but also based on the present value of the lifetime earnings of children exposed.[84] DOE invites public comment on how the agency should address this issue, including how to value mercury emissions in the absence of the CAMR. The resulting estimates of the potential range of the present value benefits associated with the national reduction of NO_X and national reductions in Hg emissions are reflected in Table VI.41 through Table VI.44.

TABLE VI.41—PRELIMINARY ESTIMATES OF SAVINGS FROM NO_X EMISSIONS REDUCTIONS FOR GSFL

TSL	Estimated cumulative NO_X (kt) emission reductions	Value of estimated NO_X emission reductions (billion 2007$) at 7% discount rate	Value of estimated NO_X emission reductions (billion 2007$) at 3% discount rate
1	5.1 to 347.4	$0.0 to $0.5	$0.0 to $0.9.
2	6.8 to 361.1	$0.0 to $0.5	$0.0 to $0.9.
3	11.7 to 623.0	$0.0 to $0.8	$0.0 to $1.6.
4	16.5 to 950.7	$0.0 to $1.3	$0.0 to $2.6.
5	20.3 to 1071.6	$0.0 to $1.4	$0. to $2.8.

[82] Office of Management and Budget Office of Information and Regulatory Affairs, ''2006 Report to Congress on the Costs and Benefits of Federal Regulations and Unfunded Mandates on State, Local, and Tribal Entities'' (2006).

[83] Trasande, L., *et al.*, ''Applying Cost Analyses to Drive Policy that Protects Children,'' 1076 ANN. N.Y. ACAD. SCI. 911 (2006).

[84] Ted Gayer and Robert Hahn, *Designing Environmental Policy: Lessons from the Regulation of Mercury Emissions*, Regulatory Analysis 05–01 (AEI-Brookings Joint Center for Regulatory Studies) p. 31 (2004). A version of this paper was published in the *Journal of Regulatory Economics* in 2006. The estimate was derived by back-calculating the annual benefits per ton from the net present value of benefits reported in the study.

TABLE VI.42—PRELIMINARY ESTIMATES OF SAVINGS FROM NO_X EMISSIONS REDUCTIONS FOR IRL

TSL	Estimated cumulative NO_X (kt) emission reductions	Value of estimated NO_X emission reductions (billion 2007$) at 7% discount rate	Value of estimated NO_X emission reductions (billion 2007$) at 3% discount rate
1	0.7 to 29.0	$0 to $0.0	$0 to $0.1.
2	1.6 to 77.6	$0 to $0.1	$0 to $0.2.
3	3.0 to 140.6	$0 to $0.2	$0 to $0.4.
4	3.8 to 180.7	$0 to $0.2	$0 to $0.5.
5	4.5 to 193.1	$0 to $0.2	$0 to $0.5.

TABLE VI.43—PRELIMINARY ESTIMATES OF SAVINGS FROM HG EMISSIONS REDUCTIONS FOR GSFL

TSL	Estimated cumulative Hg (Tons) emission reductions	Value of estimated Hg emission reductions (million 2007$) at 7% discount rate	Value of estimated Hg emission reductions (million 2007$) at 3% discount rate
1	0 to 4.2	$0 to $38.	$0 to $80.
2	0 to 3.8	$0 to $35.	$0 to $73.
3	0 to 6.9	$0 to $65.	$0 to $134.
4	0 to 7.9	$0 to $88.	$0 to $166.
5	0 to 9.1	$0 to $102.	$0 to $192.

TABLE VI.44—PRELIMINARY ESTIMATES OF SAVINGS FROM HG EMISSIONS REDUCTIONS FOR IRL

TSL	Estimated cumulative Hg (tons) emission reductions	Value of estimated Hg emission reductions (million 2007$) at 7% discount rate	Value of estimated Hg emission reductions (million 2007$) at 3% discount rate
1	0 to 0.2	$0 to $2	$0 to $5.
2	0 to 0.6	$0 to $7	$0 to $13.
3	0 to 1.3	$0 to $13	$0 to $26.
4	0 to 1.7	$0 to $16	$0 to $33.
5	0 to 1.7	$0 to $16	$0 to $33.

C. Proposed Standard

1. Overview

Under 42 U.S.C. 6295(o)(2)(A), EPCA requires that any new or amended energy conservation standard for any type (or class) of covered product shall be designed to achieve the maximum improvement in energy efficiency that the Secretary determines is technologically feasible and economically justified. In determining whether a standard is economically justified, the Secretary must determine whether the benefits of the standard exceed its burdens to the greatest extent practicable, in light of the following seven factors:

(1) The economic impact of the standard on manufacturers and consumers of the products or equipment subject to the standard;

(2) The savings in operating costs throughout the estimated average life of the covered products or equipment in the type (or class) compared to any increase in the price, initial charges, or maintenance expenses for the covered products that are likely to result from the imposition of the standard;

(3) The total projected amount of energy (or, as applicable, water) savings likely to result directly from the imposition of the standard;

(4) Any lessening of the utility or the performance of the covered products or equipment likely to result from the imposition of the standard;

(5) The impact of any lessening of competition, as determined in writing by the Attorney General, that is likely to result from the imposition of the standard;

(6) The need for national energy and water conservation; and

(7) Other factors the Secretary considers relevant. (42 U.S.C. 6295(o)(2)(B)(i))

The new or amended standard also must ''result in significant conservation of energy.'' (42 U.S.C. 6295(o)(3)(B))

As discussed in section 0, DOE established a separate set of TSLs for GSFL and IRL. Therefore, DOE analyzed each lamp type (GSFL or IRL) separately while establishing the proposed standards.

During the screening phase of this rulemaking, DOE eliminated the maximum technologically feasible levels for GSFL that would incorporate the use of a higher-efficiency gas fill composition than what is currently available on the market today. DOE's research had indicated that further usage of heavier gas fills to increase lamp efficacy beyond GSFL TSL5 would likely result in decreased utility of the product. Thus, DOE screened out the maximum technologically feasible levels that would be based on these reduced-utility GSFLs. TSL5 represents the most efficient level analyzed for GSFL.

For IRL, in the engineering analysis, DOE eliminated the maximum technologically feasible level that would require the use of a silver reflector, which DOE understands to be a proprietary technology. DOE does not believe there are any alternate technology pathways to this efficacy level. Therefore, TSL5 represents the most efficient level analyzed for IRL which does not require installation of the proprietary silver reflector. See sections IV.B.2 and VI.A.2 of this notice for more information on maximum technologically feasible levels and other efficacy levels DOE analyzed.

DOE then considered the impacts of standards at each trial standard level, beginning with the most efficient level, to determine whether the given level was economically justified. DOE then considered less efficient levels until it reached the highest level that is technologically feasible and

economically justified and saves a significant amount of energy.

DOE discusses the benefits and/or burdens of each trial standard level in the following sections. DOE bases its discussion on quantitative analytical results for each trial standard level (presented in section VI) such as national energy savings, net present value (discounted at 7 percent and 3 percent), emissions reductions, industry net present value, life-cycle cost, and consumers installed price increases. In addition to providing a summary of results, DOE discusses below the life-cycle cost and consumer installed price increase results for each product class and baseline where appropriate. Beyond the quantitative results, DOE also considers other burdens and benefits that affect economic justification, including how impacts on competition, supply constraints, and lamp input prices may affect the economic results presented.

2. General Service Fluorescent Lamps Conclusion

a. Trial Standard Level 5

For GSFL, DOE first considered the most efficient level, TSL5, which would save an estimated total of 5.8 to 13.2 quads of energy through 2042—a significant amount of energy. For the Nation as a whole, TSL5 would have a net savings of $8.5 billion to $24.5 billion at a 7-percent discount rate. The emissions reductions at TSL5 are estimated at 313 to 680 MMt of CO_2, 20 to 1072 kt of NO_X,, up to 9 metric tons of Hg. Total generating capacity in 2042 is estimated to decrease compared to the reference case by 1.8 to 5.4 GW under TSL5.

The impacts on manufacturers would be very significant, because TSL5 would commoditize high-efficacy lamps and require a complete conversion of all T12 4-foot MBP, 8-foot SP slimline, and 8-foot RDC HO lines to T8 lines, requiring a capital investment of $181.5 million. The projected change in industry value ranges from a decrease of $263 million to an increase of $13 million. The extent of the industry impacts is driven primarily by the ability to maintain current gross margins as efficient products become commoditized. Currently, manufacturers obtain higher margins for more-efficient products so to avoid the higher end of the anticipated impacts, they must find new ways to differentiate GSFL to maintain full product lines. At TSL5, DOE recognizes the risk of very large negative impacts if the high end of the range of impacts is reached, resulting in a net loss of 46 percent in INPV.

At TSL5, DOE projects that most GSFL consumers would experience life-cycle cost savings. The following discussion outlines specific impacts on the separate product classes and baseline lamps.

Table VI.5 presents the findings of an LCC analysis on various three-lamp, 4-foot medium bipin GSFL systems operating in the commercial sector. Regardless of the baseline lamp currently employed, consumers have available lamp designs which result in positive LCC savings at TSL5. At this standard level, users of 40W or 34W 4-foot MBP T12 baseline lamps installed on a magnetic ballast who need to replace their lamp would incur the cost of a lamp and ballast replacement ($63.51 to $71.19) because no T12 lamp currently meets the efficacy requirements of TSL5. Comparing this cost of lamp-and-ballast replacements to the cost of only baseline lamp replacements ($11.22 to $13.96) results in installed price increases of $50.87 to $57.23. These ranges in prices depend on the specific baseline lamps previously owned by consumers and the specific combinations of lamps and ballasts they select in the standards case. However, over the life of the lamp, these consumers would save $15.13 to $25.26.

Table VI.6 presents LCC results for a two-lamp 4-foot MBP system operating in the residential sector under average operating hours. The results are presented for a system operating 40W T12 lamps with a magnetic ballast, as this configuration is typical of the installed base of residential GSFL systems. As discussed in section V.D, DOE believes that the vast majority of lamps sold in the residential market are sold with new ballasts or luminaires. At TSL5, residential consumers are expected to purchase T8 lamps with electronic ballasts in lieu of the T12 lamps with magnetic ballasts that they would purchase absent standards. These consumers would see LCC savings of $17.72 to $19.66. DOE recognizes that not all residential GSFL lamps would be sold in conjunction with a new ballast or luminaire in the base case. In particular, consumers with higher operating hours may need to replace their lamp on an existing system. However, at TSL5, there are no standards-compliant T12 replacement lamps available. As seen in Table VI.7, the consumer economics of retrofitting a typical high-use residential 4-foot MBP system are negative, with life-cycle cost savings of −$3.50 to −$4.13.

With regard to 4-foot MBP consumer subgroups, all consumer subgroups analyzed achieve similar LCC savings to the average consumer with the exception of commercial consumers who own 40W or 34W 4-foot MBP T12 lamps installed on electronic ballasts. These consumers, upon lamp failure, are forced to retrofit their existing ballasts, resulting in negative LCC savings of −$11.53 to −$5.53 (seen in Table VI.21). Overall, based on the NIA model, DOE estimates that at TSL5 in 2012, approximately 2 percent of 4-foot MBP shipments result in negative LCC savings, and 9 percent of shipments are associated with the high installed price increases due to forced retrofits.

Table VI.10 presents the findings of an LCC analysis on various two-lamp, 8-foot SP slimline GSFL systems operating in the commercial sector. Except for consumers who purchase reduced-wattage 60W T12 lamps absent standards (and experience a lamp failure), all other consumers have available lamp designs that result in positive LCC savings at TSL5. At this standard level, users of 75W or 60W 8-foot SP slimline T12 baseline lamps installed on a magnetic ballast who need to replace their lamp would incur the cost of a lamp and ballast replacement ($93.79 to $95.12) because no T12 lamp currently meets the efficacy requirements of TSL5. Comparing the cost of a lamp-and-ballast replacement to the cost of only baseline lamp replacement ($11.33 to $16.16) results in an installed price increase of $78.96 to $83.99. In addition, users of 60W T12 lamps who need to replace their lamp experience negative LCC savings of −$14.02 to −$12.26. On the other hand, over the life of the lamp, users of 75W T12 lamps who require a lamp replacement would save $11.45.

With regard to 8-foot SP slimline consumer subgroups, all consumer subgroups analyzed achieve similar LCC savings to the average consumer with the exception of consumers of T12 lamps operating in religious institutions or users of T12 lamps installed on electronic ballasts. These consumers, upon lamp failure, are forced to retrofit their existing ballasts, resulting in negative LCC savings. In particular, as seen in Table VI.15, these consumers in institutions of religious worship (with low operating hours) experience increases in life-cycle costs of $6.68 to $28.95. As seen in Table VI.23, consumers with T12 lamps installed on electronic ballasts experience increases in life-cycle costs of $14.18 to $31.86. Overall, based on the NIA model, DOE estimates that at TSL5 in 2012, approximately 24 percent of 8-foot SP slimline shipments would result in negative LCC savings, and 65 percent of

shipments would be associated with the high installed price increases due to forced retrofits.

Table VI.11 presents the findings of an LCC analysis on various two-lamp, 8-foot RDC HO GSFL systems operating in the industrial sector. With the exception to consumers who purchase reduced-wattage 95W T12 lamps absent standards (and purchase a lamp in response to a lamp failure), all other consumers have available lamp designs that result in positive LCC savings at TSL5. At this standard level, users of 110W or 95W 8-foot RDC HO T12 baseline lamps installed on a magnetic ballast who need to replace their lamp would incur the cost of a lamp and ballast replacement ($126.49), because no T12 lamp currently meets the efficacy requirements of TSL5. Comparing the cost of a lamp-and-ballast replacement to the cost of only baseline lamp replacement ($13.92 to $19.74) results in an installed price increase of $106.75 to $112.57. In addition, users of 95W T12 lamps who need to replace their lamp experience negative LCC savings of −$12.70. On the other hand, over the life of the lamp, users of 110W T12 lamps who require a lamp replacement would save $5.13.

With regard to 8-foot RDC HO consumer subgroups, all consumer subgroups analyzed achieve similar LCC savings to the average consumer except consumers who own T12 lamps installed on electronic ballasts. These consumers, upon lamp failure, are forced to retrofit their existing ballasts, resulting in negative LCC savings of −$10.09 to −$23.07 (seen in Table VI.24). Overall, based on the NIA model, DOE estimates that at TSL5 in 2012, approximately 33 percent of 8-foot RDC HO shipments would result in negative LCC savings, and 86 percent of shipments would be associated with the high installed price increases due to forced retrofits.

Table VI.8 and Table VI.9 present the LCC analyses on two-lamp 4-foot MiniBP T5 standard-output and high-output systems, respectively. The standard-output system is modeled as operating in the commercial sector, and the high-output system is modeled as operating in the industrial sector. The baseline lamps for these systems are the model 28W and 54W halophosphor lamps, as discussed in section V.C.3.a. At TSL5 (EL2 for standard output T5 lamps), all consumers of standard output lamps have available lamp designs which result in positive LCC savings of $1.22 (for lamp replacement) and $45.27 to $47.03 (for new construction or renovation). At TSL5 (EL1 for high output T5 lamps), consumers of high-output lamps who need only a lamp replacement would experience negative LCC savings of −$3.42. However, purchasing a T5 high-output system for new construction or renovation would result in positive LCC savings of $55.60 to $56.60.

After carefully considering the analysis and weighing the benefits and burdens of TSL5, the Secretary has reached the following initial conclusion: At TSL 5, the benefits of energy savings, emissions reductions (both in physical reductions and the monetized value of those reductions), and the positive net economic savings to the Nation (over 30 years) would be outweighed by the economic burden on some consumers (as indicated by the large increase in total installed cost) and the potentially large reduction in INPV for manufacturers resulting from large conversion costs and reduced gross margins. Specifically, consumers who operate a 4-foot MBP, 8-foot SP slimline, or 8-foot RDC HO T12 ballast prior to 2012 would be forced to retrofit their system upon lamp failure, incurring an initial cost six to thirteen times that of a simple lamp replacement. Additionally, consumers who installed T12 electronic ballasts before 2012 would bear the large increases in first cost without benefiting from LCC savings. Consequently, the Secretary has tentatively concluded that trial standard level 5 is not economically justified.

b. Trial Standard Level 4

Next, DOE considered TSL 4, which would save an estimated total of 4.5 to 11.6 quads of energy through 2042, a significant amount of energy. For the Nation as a whole, TSL4 would have a net savings of $8.9 billion to $23.4 billion at a 7-percent discount rate. The emissions reductions at TSL4 are estimated at 240 to 598 MMt of CO_2, 17 to 951 kt of NO_X, and up to 8 metric tons of Hg. Total generating capacity in 2042 is estimated to decrease compared to the reference case by 1.3 to 4.3 GW under TSL4.

Similar to TSL5, the impacts on manufacturers would be very significant because TSL4 also would commoditize most high-efficacy lamps and require a complete conversion of all T12 4-foot MBP, 8-foot SP slimline, and 8-foot RDC HO lines to T8 lines, a capital investment of $181.5 million. The projected change in industry value ranges from a decrease of $195 million to a decrease of $9 million. At TSL4, DOE recognizes the risk of very large negative impacts if the high end of the range of impacts is reached, resulting in a net loss of 34 percent in INPV.

As seen in Table VI.5 through Table VI.11, at TSL4, DOE projects that 4-foot MBP, 8-foot SP slimline, and 8-foot RDC HO consumers would experience similar life-cycle cost savings and increases as they would experience at TSL5. Like TSL5, consumers who own T12 ballasts prior to 2012 at TSL4 would likely experience negative economic impacts, either through life-cycle cost increases or by large increases in total installed cost. For 4-foot MiniBP T5 standard-output lamps, TSL4 would require these lamps to meet EL1, resulting in positive LCC savings of $1.22 for lamp replacement and $42.84 for new construction or renovation (seen in Table VI.8). For 4-foot MiniBP T5 high-output lamps, TSL4 would require the same efficacy level (EL1) as TSL5, resulting in identical life-cycle cost impacts.

After carefully considering the analysis and weighing the benefits and burdens of TSL4, the Secretary has reached the following initial conclusion: At TSL4, the benefits of energy savings, emissions reductions (both in physical reductions and the monetized value of those reductions), and the positive net economic savings to the Nation (over 30 years) would be outweighed by the economic burden on some consumers (as indicated by the large increase in total installed cost) and the potentially large reduction in INPV for manufacturers. Specifically, consumers who operate a 4-foot MBP, 8-foot SP slimline, or 8-foot RDC HO T12 ballast prior to 2012 would be forced to retrofit their system upon lamp failure, incurring an initial cost six to thirteen times that of a simple lamp replacement. Additionally, consumers who installed T12 electronic ballasts before 2012 would bear the large increases in first cost without benefiting from LCC savings. Consequently, the Secretary has tentatively concluded that trial standard level 4 is not economically justified.

c. Trial Standard Level 3

Next, DOE considered TSL3, which would save an estimated total of 3.2 to 7.3 quads of energy through 2042, a significant amount of energy. For the Nation as a whole, TSL3 would have a net savings of $3.2 billion to $11.1 billion at a 7-percent discount rate. The emissions reductions at TSL3 are estimated at 184 to 395 MMt of CO_2, 12 to 623 kt of NO_X, and up to 7 metric tons of Hg. Total generating capacity in 2042 would be estimated to decrease compared to the reference case by 1100 to 3400 megawatts under TSL3.

As opposed to TSL4 and TSL5, TSL3 does not eliminate all T12 lamps from

the market. The impacts on manufacturers are less significant because TSL3 does not require a complete conversion of all T12 4-foot MBP, 8-foot SP slimline, and 8-foot RDC HO lines to T8 lines. Instead, the required capital investments of $104.5 million are to account for the likely accelerated consumer migration toward T8 lamps. The projected change in industry value ranges from a decrease of $139 million to an increase of $71 million. The upper range of these impacts results from the reduced efficacy range of the product line and the corresponding reduction in gross margins. Compared with TSL 4 and TSL 5, TSL 3 maintains a broader product line and, thus, provides manufacturers with a greater opportunity to differentiate lamp offerings.

At TSL3, DOE projects that most GSFL consumers would experience life-cycle cost savings. Because the minimum efficacy levels for the T5 product classes are the same for TSL3 as they are for TSL4, the life-cycle cost impacts on these consumers are identical as well. However, for the other GSFL product classes, the consumer economic impacts do differ at TSL3 from TSL4 and TSL5. Because T12 lamps are still available at this level, all consumers have viable lamp replacement options without needing to retrofit their ballasts. As a result, initial costs for 4-foot MBP, 8-foot SP slimline, or 8-foot RDC HO T12 lamp replacements are significantly lower than initial costs required at TSL4 and TSL5 when consumers must purchase a new lamp and new ballast with standards. For example, for 4-foot MBP lamps, installed costs at TSL3 may increase by $13.91 over a baseline lamp cost of $11.22 in the commercial sector or by $8.48 over the baseline lamp cost of $3.98 in the residential sector.

Although incremental total installed costs are considerably reduced in comparison to TSL4 and TSL5, some consumers would still experience negative life-cycle cost savings at TSL3. These are many of the same consumers that would have negative savings at TSL4 and TSL5. Residential consumers who own T12 ballasts prior to 2012 would experience negative LCC savings when replacing only their lamps (approximately 2 percent of 4-foot MBP shipments in 2012). Consumers who, absent standards, replace reduced-wattage T12 lamps on 8-foot SP slimline systems (24 percent of 8-foot SP slimline shipments in 2012) experience net life-cycle cost increases. Approximately 33 percent of 8-foot RDC HO shipments in 2012 (those consumers who replace reduced-wattage T12 lamps) result in negative LCC savings. As seen in section VI.B.1.a.i, for GSFL, often higher efficacy level lamps result in higher (or less negative) life-cycle cost savings. At TSL3, consumers have the option of purchasing these higher-efficacy lamps, and, therefore, can achieve similar life-cycle cost savings as at TSL4 and TSL5.

After considering the analysis and the benefits and burdens of trial standard level 3, the Secretary has reached the following tentative conclusion: Trial standard level 3 offers the maximum improvement in energy efficiency that is technologically feasible and economically justified, and will result in significant conservation of energy. The Secretary has reached the initial conclusion that the benefits of energy savings, emissions reductions (both in physical reductions and the monetized value of those reductions), and the positive net economic savings to the Nation would outweigh the economic burden on some consumers (as indicated by negative life-cycle cost savings) and the potentially large reduction in INPV for manufacturers. TSL 3 offers almost all consumers the choice to select lamp and ballast systems that will reduce their life-cycle costs but does not force them to incur the increased first costs of a new ballast if they elect not to do so. Therefore, DOE today proposes to adopt the energy conservation standards for GSFL at trial standard level 3.

DOE will seriously consider adopting a more stringent standard level in the final rule that would eliminate T12 lamps, as described in discussions regarding TSL4 and TSL5. An example may be for DOE to adopt a more stringent standard level in the final rule that, similar to TSL4 and TSL5, would eliminate T12 lamps, but allow an extended lead time before compliance would be required. A second example may be for DOE to adopt a more stringent standard level, while continuing to allow the sale of specially packaged or labeled T12 lamps in the residential sector only. DOE seeks comment on these or other possible alternative scenarios.

3. Incandescent Reflector Lamps Conclusion

a. Trial Standard Level 5

For IRL, DOE first considered the most efficient level, TSL5, which would save an estimated total of 1.5 to 2.6 quads of energy through 2042—a significant amount of energy. For the Nation as a whole, TSL5 would have a net savings of $4.3 billion to $7.5 billion at a 7-percent discount rate. The emissions reductions at TSL5 are estimated at 79 to 119 MMt of CO_2, 5 to 193 kt of NO_X, and up to 2 metric tons of Hg. Total generating capacity in 2042 is estimated to decrease compared to the reference case by 40 to 500 MW under TSL5. As seen in Table VI.12, regardless of the baseline lamp purchased absent standards, consumers have available lamp designs which result in positive LCC savings, ranging from $1.49 to $9.41, at TSL5. The higher savings result from consumers who purchase lamps with larger lumen packages, while the lower savings result from consumers who purchase lamps with smaller lumen packages.

The projected change in industry value would range from a decrease of $82 million to $103 million, or a net loss of 31 to 50 percent in INPV. The range in impacts is attributed in part to uncertainty concerning the future share of emerging technologies in the IRL market, as well as the expected migration to R–CFL and exempted IRL technologies under standards.

DOE based TSL5 on commercially-available IRL which employ a silver reflector, an improved IR coating, and a filament design that results in a lifetime of 4,200 hours. To DOE's knowledge, only one manufacturer currently sells products that meet TSL5. In addition, it is DOE's understanding that the silver reflector is a proprietary technology that all manufacturers may not be able to employ. However, DOE considered TSL5 in its analysis because it believes that there are alternate pathways to achieve this level. A combination of redesigning the filament to achieve higher-temperature operation (and thus reducing lifetime to 3,000 hours), employing other non-proprietary high-efficiency reflectors, or applying higher-efficiency IR coatings has the potential to result in an IRL that meets an equivalent efficacy level. However, to DOE's knowledge, no prototype IRL exists that meets this efficacy level and does not use proprietary technology. Therefore, DOE is uncertain as to whether there are barriers to implementing these alternate pathways. In addition, DOE is uncertain of the manufacturer costs associated with producing such an IRL. As documented in appendix 5D of the TSD, DOE received manufacturer cost estimates from an IR coating manufacturer. Based on these cost estimates, DOE estimated that a medium-range end-user price for PAR 38 IRL that meet TSL5 and do not employ the proprietary silverized reflector would be $7.91. This price, when compared to the end-user price of the commercially-available PAR38 IRL that meet TSL5 and use the silverized

reflector ($8.03), would appear to be cost-competitive. However, DOE requires verification of these cost estimates before proposing a standard that would require this higher-efficiency IR coating technology. If it is significantly more costly for some manufacturers to meet this level than others, it is likely to cause a lessening of competition and distortions in the marketplace.

After carefully considering the analysis and weighing the benefits and burdens of TSL5, the Secretary has reached the following initial conclusion: At TSL5, the benefits of energy savings, emissions reductions (both in physical reductions and the monetized value of those reductions), the positive net economic savings to the Nation (over 30 years) would be outweighed by the large capital conversion costs that could result in a reduction in INPV for manufacturers and possible lessening of competition. Consequently, the Secretary has tentatively concluded that trial standard level 5 is not economically justified.

As discussed above, DOE is not proposing TSL5 because DOE finds that the benefits to the Nation of TSL5 do not outweigh the costs, and, therefore, DOE proposes that TSL5 is not economically justified. This proposal reflects DOE's tentative conclusion that there remains too much uncertainty regarding the ability for manufacturers to produce lamps that meet this level. While information is available that suggests that there are other economical pathways (without the use of proprietary technology) to meet this efficacy level, DOE believes that it must have a higher degree of confidence that these pathways exist and a clearer understanding of the economic burdens (to consumers and manufacturers) to warrant higher standards before it imposes such requirements. DOE is soliciting public comments on these and other issues, and will reconsider this tentative conclusion during the development of its final rule. Specifically, DOE requests comment on other technology pathways that may be utilized to meet TSL5, and whether these pathways may have any adverse effects on consumer utility or the ability for the product to be mass produced. In addition, DOE requests comment on the manufacturer costs associated with these pathways and resulting consumer product prices for lamps that meet this efficacy level. Based upon the information it receives, DOE may consider adoption of TSL5 at the final rule stage.

b. Trial Standard Level 4

DOE next considered TSL4, which would save an estimated total of 1.3 to 2.3 quads of energy through 2042—a significant amount of energy. For the Nation as a whole, TSL4 would have a net savings of $3.7 billion to $6.8 billion at a 7-percent discount rate. The emissions reductions at TSL4 are estimated at 59 to 114 MMt of CO_2, 4 to181 kt of NO_X, and up to 2 metric tons of Hg. Total generating capacity in 2042 is estimated to decrease compared to the reference case by 0 to 500 MW under TSL4. As seen in Table VI.12, regardless of the baseline lamp currently employed, consumers have available lamp designs which would result in positive LCC savings, ranging from $1.62 to $8.14, at TSL4.

To DOE's knowledge, two of the three major manufacturers of IRL currently sell a full product line (across common wattages) that meet this standard level. In addition, it is DOE's understanding that the third manufacturer employs a technology platform that, due to the positioning of the filament in the HIR capsule, is inherently less efficient. Therefore, it is likely that in order to meet TSL4, this manufacturer would have to make considerably higher investments than the other manufacturers, placing it at a competitive disadvantage. DOE projects that change in industry value at TSL4 ranges from a decrease of $77 million to $94 million, or net loss of 29 to 46 percent in INPV. However, compared to each of the baselines, TSL4 showed significant positive life-cycle cost savings on a national average basis and for all consumer subgroups. In addition, TSL4 is projected to result in significant net economic savings to the Nation.

After considering the analysis, comments on the ANOPR, and the benefits and burdens of trial standard level 4, the Secretary has reached the following tentative conclusion: Trial standard level 4 offers the maximum improvement in efficacy that is technologically feasible and economically justified, and will result in significant conservation of energy. The Secretary has reached the initial conclusion that the benefits of energy savings, emissions reductions (both in physical reductions and the monetized value of those reductions), the positive net economic savings to the Nation, and positive life-cycle cost savings would outweigh the potentially large reduction in INPV for manufacturers. Therefore, DOE today proposes to adopt the energy conservation standards for IRL at trial standard level 4.

VII. Procedural Issues and Regulatory Review

A. Review Under Executive Order 12866

Today's regulatory action has been determined to be an economically significant regulatory action under Executive Order 12866, ''Regulatory Planning and Review.'' 58 FR 51735 (Oct. 4, 1993). Accordingly, this action was subject to review under the Executive Order by the Office of Information and Regulatory Affairs (OIRA) at OMB.

The Executive Order requires that each agency identify in writing the specific market failure or other specific problem that it intends to address that warrant new agency action, as well as assess the significance of that problem, to enable assessment of whether any new regulation is warranted. Executive Order 12866, § 1(b)(1).

DOE's analysis for GSFL and IRL explicitly accounts for the percentage of consumers that already purchase more-efficient products and takes these consumers into account when determining the national energy savings associated with various trial standard levels. The analysis suggests that accounting for the market value of energy savings alone (*i.e.*, excluding any possible ''externality'' benefits such as those noted below) would produce enough benefits to yield net benefits across a wide array of products and circumstances. In its ANOPR, DOE requested additional data on and suggestions for testing the existence and extent of potential market failures to assess the significance of these failures and, thus, the net benefits of regulation. 73 FR 13620, 13688 (March 13, 2008) In particular, DOE sought to verify the estimates of the percentage of consumers purchasing efficient lighting equipment and the extent to which consumers will continue to purchase more-efficient equipment in future years. DOE received no such data in response to the ANOPR but continues to request such data in today's proposed rule.

DOE believes that there is a lack of consumer information and/or information processing capability about energy efficiency opportunities in the lighting market. If this is the case, DOE would expect the efficiency for lighting products to be randomly distributed across key variables such as electricity prices and usage levels. Although DOE has identified the percentage of consumers that already purchase more-efficient lighting products, DOE does not correlate the consumers' usage pattern and electricity price with the efficiency of the purchased product. In

its ANOPR, DOE sought data on the correlation between the efficacy of existing lamps, usage patterns (*e.g.*, how many hours the product is used), and its associated electricity price (geographic region of the country). 73 FR 13620, 13688 (March 13, 2008) DOE received no such data from interested parties in response to the ANOPR but continues to request this data in today's proposed rule. DOE plans to use these data to test the extent to which purchasers of this equipment behave as if they are unaware of the costs associated with their energy consumption.

DOE believes several factors contribute to the lack of consumer information for lighting products. In the residential sector, consumers that base purchases on wattage rather than lumen output may reject higher efficacy or energy-saving lamp designs. For example, consumers may not recognize that a higher efficacy, reduced-wattage lamp fulfills the same utility as a higher-wattage lamp, although both lamps may have similar lumen outputs. For this reason, higher-efficiency products may be unduly rejected in the marketplace. In the commercial and industrial sectors, the complexity of GSFL systems may introduce high information costs. GSFL systems are composed of lamps and ballasts with a multitude of varying properties, such as lamp wattage, lumen output, lifetime, and ballast factor. These variables impose high information costs which may prevent purchasers from selecting the most cost-effective GSFL system. In its ANOPR, DOE sought comment on the potential for the Federal ENERGY STAR program to increase consumer knowledge of the availability and benefits of energy-efficient lamps. DOE received no data in response to the ANOPR but continues to request this data in today's proposed rule.

A related issue is the problem of asymmetric information (one party to a transaction has more and better information than the other) and/or high transactions costs (costs of gathering information and effecting exchanges of goods and services). In many instances, the party responsible for the lamp purchase may not pay to operate it. For example, in the commercial and industrial sectors, building owners and developers may make purchasing decisions about lighting fixtures that include ballasts and lamps, but tenants pay the utility bills. Although renters often have the opportunity to purchase replacement lamps, renters are severely limited in their choices by prior fixture and ballast selections. The separation of fixture purchases and payment for the operating costs imposes transaction costs on the renter. If there were no transactions costs, building developers and owners would install the lighting fixtures renters would choose on their own. For example, a tenant who knowingly faces higher utility bills from low-efficacy lighting would be willing to pay less in rent, and the building owner would indirectly bear the higher utility cost. However, this information is not costless, and it may not be in the interest of the renter to take the time to develop the knowledge of the higher operating cost of low-efficacy lighting. Similarly, it may not be in the interest of the building owner who installs lighting systems to convey operating cost information to the renter.

DOE did not receive any data that would enable it to conduct tests of market failure in response to the March 2008 ANOPR. DOE would not expect a correlation between higher rents for office space with high-efficacy lighting systems if there were a market failure due to asymmetric information and/or high transactions costs. If there were symmetric information with low transaction costs, renters would be fully knowledgeable about the lower operating costs of high-efficacy lighting systems and would compensate owners for their reduced costs.

This proposed rulemaking is likely to yield certain external benefits resulting from improved energy efficiency of GSFL and IRL that are not captured by the users of such products. These benefits include externalities related to environmental protection and energy security which are not reflected in energy prices, such as reduced emissions of greenhouse gases. The emissions reductions in today's proposed rule are projected to be 184 to 395 MMt and 59 to 114 MMt of CO_2 for GSFL and IRL, respectively, and 12 to 623 kt, 4 to 181 kt of NO_X, for GSFL and IRL, respectively. In addition, today's proposed rule is projected to result in Hg emissions reduction of up to 7 metric tons and 2 metric tons for GSFL and IRL, respectively. DOE invites comments on the weight that DOE should place on these factors in determining the maximum energy efficacy level at which the total benefits are likely to exceed the total burdens resulting from an amended standard.

As previously stated, DOE generally seeks data that might enable it to conduct tests of market failure for products under consideration for standard-setting. For example, given adequate data, there are ways to test for the extent of market failure for commercial GSFL. One would expect the owners of fluorescent lamps who also pay for their electricity consumption to purchase more-efficient lamps compared to owners who do not pay for their electricity usage. To test for this form of market failure, DOE needs data on energy efficiency of such units and whether the owner of the equipment also pays the operating costs. DOE is also interested in other potential tests of market failure and data that would enable such tests.

DOE conducted a regulatory impact analysis (RIA) and, under the Executive Order, was subject to review by OIRA. DOE presented to OIRA for review the draft proposed rule and other documents prepared for this rulemaking, including the RIA, and has included these documents in the rulemaking record. They are available for public review in the Resource Room of the Building Technologies Program, 950 L'Enfant Plaza, SW., 6th Floor, Washington, DC 20024, (202) 586–9127, between 9 a.m. and 4 p.m., Monday through Friday, except Federal holidays.

The RIA is contained in the TSD as a separate report. The RIA consists of: (1) A statement of the problem addressed by this regulation, and the mandate for government action; (2) a description and analysis of the feasible policy alternatives to this regulation; (3) a quantitative comparison of the impacts of the alternatives; and (4) the national economic impacts of the proposed standard.

The RIA calculates the effects of feasible policy alternatives to energy conservation standards for GSFL and IRL and provides a quantitative comparison of the impacts of the alternatives. DOE identified the following major policy alternatives for achieving increased energy efficiency in GSFL and IRL:

- No new regulatory action.
- Consumer rebates.
- Consumer tax credits.
- Manufacturer tax credits.
- Voluntary energy-efficiency targets.
- Bulk government purchases.
- Early replacement.
- The proposed energy conservation standards.

DOE evaluated each alternative's ability to achieve significant energy savings at reasonable costs (Table VII.1 and Table VII.2) and compared it to the effectiveness of the proposed rule. DOE analyzed these alternatives using a series of regulatory scenarios as inputs to the NIA spreadsheets for the two products, which it modified to allow inputs for voluntary measures.

TABLE VII.1—GSFL NATIONAL ENERGY SAVINGS AND NET PRESENT VALUE OF NON-REGULATORY ALTERNATIVES COMPARED TO THE PROPOSED STANDARDS

Policy alternatives [1]	National energy savings (quads)	Net present value (billion $2007)	
		7% Discount rate	3% Discount rate
No New Regulatory Action	0	0	0
Consumer Rebates	1.33–1.74	1.93–2.67	4.72–6.58
Consumer Tax Credits	0.63–0.83	1.13–1.33	2.47–3.17
Manufacturer Tax Credits	0.35–0.44	0.68–0.73	1.49–1.64
Voluntary Energy Efficiency Targets	1.09–1.44	1.54–2.10	3.83–5.19
Bulk Government Purchases	1.21–1.61	1.69–2.36	4.23–5.82
Proposed Standards [2]	3.15–7.12	3.15–10.75	8.73–24.87

Notes:
[1] NPV discounted to 2007; Non-regulatory alternatives encourage purchases of GSFL at TSL 3.

TABLE VII.2—IRL NATIONAL ENERGY SAVINGS AND NET PRESENT VALUE OF NON-REGULATORY ALTERNATIVES COMPARED TO THE PROPOSED STANDARDS

Policy alternatives [1]	National energy savings (quads)	Net present value (billion $2007)	
		7% Discount rate	3% Discount rate
No New Regulatory Action	0	0	0
Consumer Rebates	0.52–0.69	1.52–1.89	3.19–3.97
Consumer Tax Credits	0.32–0.42	0.96–1.17	1.97–2.44
Manufacturer Tax Credits	0.16–0.21	0.53–0.64	1.05–1.28
Voluntary Energy Efficiency Targets	0.26–0.45	0.83–1.28	1.65–2.59
Bulk Government Purchases	0.04–0.24	0.23–0.72	0.32–1.33
Proposed Standards	1.25–2.21	3.72–6.00	7.68–12.45

Notes:
[1] NPV discounted to 2007, Non-regulatory alternatives encourage purchases of IRL at TSL 4.

The results for each scenario are reported at the TSLs proposed by DOE in this rulemaking; they are TSL 3 for GSFL and TSL 4 for IRL. For GSFL, the range presented results from the effects of applying the lighting expertise scenario discussed in section V.E.4.b. The lower end of the range represents the Emerging Technologies, market-segment based lighting expertise scenario. In contrast, the upper end of the range for GSFL represents the Existing Technologies, high-lighting expertise scenario. For IRL, the range of impacts results from the two base-case shipment scenarios analyzed in the NIA. The lower end of the range for IRL represents the Emerging Technologies scenario, whereas the upper end of the range represents the Existing Technologies scenario.

DOE did not analyze one of the policy alternatives (early replacement), because, as discussed below, DOE believes that the lifetimes of the lamps analyzed are too short for early replacement to result in significant savings. In overview, of the other alternatives that DOE examined, none would save as much energy nor have an NPV as high as the proposed standards. Also, some of the alternatives would require new enabling legislation (*e.g.,* consumer or manufacturer tax credits), as authority to carry out those alternatives does not presently exist. The following paragraphs summarize each policy alternative. Additional details can be found in the regulatory impact analysis report of the TSD.

No New Regulatory Action. The case in which DOE takes no regulatory action regarding GSFL and IRL is the base case (or no action) scenario. Because this is the base case, energy savings and NPV for GSFL and IRL are zero by definition. In this case, between 2012 and 2042, as determined in the NIA, energy consumption for GSFL is expected to range from 82.16 to 94.73 quads of primary energy and energy consumption for IRL is expected to range from 5.64 to 10.52 quads of primary energy.

Consumer Rebates. Consumer rebates cover a portion of the difference in incremental product price between products meeting baseline efficacy levels and those meeting higher efficacy levels, resulting in a higher percentage of consumers purchasing more efficient models. For GSFL, DOE estimated the impact of improving the simple payback through a rebate that paid 70 percent of the incremental product price. DOE based the 70-percent rebate on existing utility rebate programs for replacing a T12 lamp with a T8 lamp or upgrading an existing T8 lamp to a more-efficacious T8 GSFL.[85] DOE studied each program and found that the average rebate amounted to about 70 percent of the incremental product price for GSFL. DOE assumed that the consumer rebate policy would reduce the incremental product price for IRL during the analysis period by the same percentage. DOE calculated the simple payback period of each higher efficacy lamp, both with and without the rebate. Then by using the market penetration curves discussed in section V.E.2.c, DOE estimated percent market adoption of a technology as a function of technology simple payback. The difference between the market penetration with and without the rebate was assumed to represent the market share that would participate in a consumer rebate program. For both GSFL and IRL, DOE assumed that the impact of this policy would be to permanently transform the market so that the increased market penetration seen in the first year of the program would be maintained throughout the forecast period.

[85] DOE averaged the rebates from utility programs across the United States, including NSTAR, Pacific Gas & Electric, Xcel, Idaho Power and Light, Duke Energy, and Alliant. (See the RIA to the TSD for additional detail.)

At the estimated participation rates for GSFL, DOE calculated that consumer rebates would provide between 1.33 and 1.74 quads of national energy savings and an NPV between $1.93 and $2.67 billion (at a 7-percent discount rate). For IRL, DOE calculated that consumer rebates at the estimated participation rates would provide between 0.52 and 0.69 quads of national energy savings and an NPV between $1.52 and $1.89 billion (at a 7-percent discount rate).

Although DOE estimated that consumer rebates would provide national benefits for GSFL and IRL products, these benefits would be smaller than the benefits resulting from the proposed energy conservation standards. Thus, DOE rejected consumer rebates as a policy alternative to energy conservation standards.

Consumer Tax Credits. Consumer tax credits cover a percentage of the difference in incremental product price between products meeting baseline efficacy levels and those with higher efficiencies. Consumer tax credits are considered a viable non-regulatory market transformation program, as the inclusion of Federal consumer tax credits in EPACT 2005 for various residential appliances shows. (section 1333 of EPACT 2005; codified at 26 U.S.C. 25C) DOE assumed a consumer tax credit equivalent to the amount covered by rebates (*i.e.*, 70 percent of the difference in incremental product price between the base case and higher-efficacy products).

DOE estimated that for both lamp types, the consumer participation rate for tax credits would be lower than the rate of participation in consumer rebates. Research on tax credits has shown that the time delay to the consumer in receiving a reimbursement through a tax credit, plus the added transaction costs in tax-return preparation, make the tax credit incentive less effective than a rebate received at the time of purchase. Based on previous analyses, DOE assumed that only 60 percent as many consumers would take advantage of the tax credit as would take advantage of a rebate. DOE assumed the impact of the policy would be to permanently transform the market at this market penetration level.

For GSFL, at the estimated participation rate, consumer tax credits would provide national energy savings between 0.63 and 0.83 quads and an NPV between $1.13 and $1.33 billion (at a 7-percent discount rate). At the estimated participation rates for IRL, consumer tax credits would provide between 0.32 and 0.42 quads of national energy savings and an NPV between $0.96 and $1.17 billion (at a 7-percent discount rate). DOE estimated that while consumer tax credits would yield national benefits for GSFL and IRL, these benefits would be much smaller than the benefits from the proposed energy conservation standards. Thus, DOE rejected consumer tax credits as a policy alternative to energy conservation standards.

Manufacturer Tax Credits. Manufacturer tax credits are considered a viable non-regulatory market transformation program, as the inclusion of Federal tax credits in EPACT 2005 for manufacturers of residential appliances shows. (section 1334 of EPACT 2005; codified at 26 U.S.C. 45M) Similar to consumer tax credits, manufacturer tax credits would effectively result in lower product prices for consumers by an amount that covered part of the incremental product price difference between products meeting baseline efficacy levels and those meeting higher efficacy levels. Because these tax credits would go to manufacturers instead of consumers, fewer consumers would be affected by a manufacturer tax credit program than by consumer tax credits.[86] [87] Although consumers would benefit from price reductions passed through to them by manufacturers, approximately half the consumers who would benefit from a consumer tax credit program would be aware of the economic benefits of more-efficient technologies included in an appliance manufacturer tax credit program. Therefore, DOE estimated that the effect of a manufacturer tax credit program would be only half of the maximum impact of a consumer tax credit program. For both GSFL and IRL, DOE assumed that this policy would permanently transform the market so that the increased market penetration seen in the first year of the program would be maintained throughout the forecast period.

At the estimated participation rates for GSFL, DOE calculated that manufacturer tax credits would provide between 0.35 and 0.44 quads of national energy savings and an NPV between $0.68 and $0.73 billion (at a 7-percent discount rate). For IRL, DOE estimated national energy savings between 0.16 and 0.21 quads and an NPV between $0.53 and $0.64 billion (at a 7-percent discount rate). DOE estimated that while manufacturer tax credits would yield national benefits for GSFL and IRL, these benefits would be much smaller than the benefits from the proposed energy conservation standards. Thus, DOE rejected manufacturer tax credits as a policy alternative to energy conservation standards.

Voluntary Energy Efficiency Targets. DOE estimated the impact of a voluntary energy efficiency program by reviewing the historical and projected market transformation performance of past and current ENERGY STAR programs. The Environmental Protection Agency (EPA) introduced the Green Lights program in January of 1991. Green Lights was a voluntary (non-regulatory) program tasked with a goal of reducing air pollution by promoting energy-efficient lighting. Companies that elected to participate installed energy-efficient lighting where it proved to be cost-effective (as long as lighting quality was not diminished). In return, the EPA provided technical assistance and public recognition. In a similar effort, the EPA launched the ENERGY STAR program in 1992 as a voluntary labeling program to help consumers identify the most energy-efficient products on the market. In 1995, Green Lights became a part of the ENERGY STAR program.[88]

In order to determine how a lighting market would respond to a voluntary energy program, DOE analyzed the success of the Green Lights program in the 1990s. One of the significant results of the Green Lights program was demonstrated in its initiative to encourage consumers to purchase higher-efficiency electronic ballasts over less-efficient magnetic ballasts. As a result of this initiative, electronic ballasts began to enter the market in increasing numbers. A study that analyzed the impact of public programs on fluorescent ballast shipments concluded that of all the electronic ballasts shipped between 1986 and 2000, 61 percent were due to this public program.[89] DOE used data from the US Census to calculate the percent of the market that opted to use more efficient ballasts as a result of a voluntary program. Based on this analysis, DOE concluded that 20 percent of the market would shift to more-efficient products as a result of a voluntary energy efficiency program. DOE assumed this participation rate would be the same for

[86] Kenneth Train, *Customer Decision Study: Analysis of Residential Customer Equipment Purchase Decisions* (Prepared for Southern California Edison by Cambridge Systematics, Pacific Consulting Services, The Technology Applications Group, and California Survey Research Services) (1994).

[87] Lawrence Berkeley National Laboratory, End-Use Forecasting Group, *Analysis of Tax Credits for Efficient Equipment* (1997). Available at: *http://enduse.lbl.gov/Projects/TaxCredits.html* (Last accessed April 24, 2008).

[88] Available at: *http://www.energystar.gov/index.cfm?c=about.ab_milestones*.

[89] Horowitz, Marvin J., ''Economic Indicators of Market Transformation: Energy Efficient Lighting and EPA's Green Lights,'' *Energy Journal*, Vol. 22, No. 4, (2001) pp. 95–122.

both GSFL and IRL. DOE also assumed that the impact of this policy would be to permanently transform the market so that the increased market penetration seen in the first year of the program would be maintained throughout the forecast period.

For GSFL, DOE estimated that voluntary energy efficiency targets would provide between 1.09 and 1.44 quads of national energy savings and an NPV between $1.54 and $2.10 billion (at a 7-percent discount rate). For IRL, DOE estimated national energy savings between 0.26 and 0.45 quads and an NPV between $0.83 and $1.28 billion (at a 7-percent discount rate). DOE estimated that while voluntary energy-efficiency targets would yield national benefits for GSFL and IRL, these benefits would be much smaller than the benefits from the proposed energy conservation standards. Thus, DOE rejected voluntary energy efficiency targets as a policy alternative to energy conservation standards.

Early Replacement. The early replacement policy alternative envisions a program to replace old, inefficient units with models meeting efficacy levels higher than baseline equipment. DOE did not model this alternative because the lifetimes of GSFL and IRL are very short (on the order of 1 to 5 years), so the savings would not be very great. Early replacement policies are generally beneficial for products with long lifetimes (*e.g.*, washers and dryers, furnaces) and that represent a significant upfront investment, neither of which apply to GSFL and IRL.

Bulk Government Purchases. Under this policy alternative, the government sector would be encouraged to shift its purchases to products that meet the target efficacy levels. DOE assumed that Federal, State, and local government agencies would administer such a program. DOE modeled this program by assuming an increase in the installation of equipment meeting higher efficacy levels for those locations where government agencies purchase or influence the purchase of appliances.

Similar to previous analysis, DOE used floor space data from CBECS 2003 to derive the proportion of government-owned floor space to total commercial floor space, which is 21.4 percent. DOE assumed that the portion of government-owned floor space is proportional to the portion of government lamp purchases. DOE then added a 1.4 percent market-pull impact to arrive at a conservative 22.8 percent market penetration rate.[90] Bulk government purchases will not affect the residential market as DOE believes that most government-owned buildings are in the commercial sector. DOE assumed that the impact of this policy would be to permanently transform the market so that the increased market penetration seen in the first year of the program would be maintained throughout the forecast period.

At the above estimated participation rates, the bulk government purchases scenario would provide between 1.21 and 1.61 quads of national energy savings and an NPV between $1.69 and $2.36 billion (at a 7-percent discount rate) for GSFL, and between 0.04 and 0.24 quads of national energy savings and an NPV between $0.23 and $0.72 billion (at a 7-percent discount rate) for IRL. DOE estimated that while bulk government purchases would yield national benefits for GSFL and IRL, these benefits would be much smaller than the benefits from the proposed energy conservation standards. Thus, DOE rejected voluntary energy efficiency targets as a policy alternative to energy conservation standards.

Energy Conservation Standards. As indicated in the paragraphs above, none of the alternatives DOE examined would save as much energy as the proposed energy conservation standards. Therefore, DOE proposes to adopt the efficacy levels listed in section VI.C

B. Review Under the Regulatory Flexibility Act

The Regulatory Flexibility Act (5 U.S.C. 601 *et seq.*) requires preparation of an initial regulatory flexibility analysis (IRFA) for any rule that by law must be proposed for public comment, unless the agency certifies that the rule, if promulgated, will not have a significant economic impact on a substantial number of small entities. As required by Executive Order 13272, *Proper Consideration of Small Entities in Agency Rulemaking*, 67 FR 53461 (August 16, 2002), DOE published procedures and policies on February 19, 2003, to ensure that the potential impacts of its rules on small entities are properly considered during the rulemaking process. 68 FR 7990. DOE has made its procedures and policies available on the Office of the General Counsel's Web site at *http://www.gc.doe.gov*.

DOE reviewed today's proposed rule under the provisions of the Regulatory Flexibility Act and the procedures and policies published on February 19, 2003. 68 FR 7990. A regulatory flexibility analysis examines the impact of the rule on small entities and considers alternative ways of reducing negative impacts. DOE identified producers of all products covered by this rulemaking which have manufacturing facilities located within the United States. DOE then looked at publicly-available data and contacted manufacturers, as necessary, to determine if they meet the Small Business Administration (SBA) definition of a small manufacturing facility.

In the context of this rulemaking, ''small businesses,'' as defined by the SBA, for the GSFL and IRL manufacturing industries, are manufacturing enterprises with 1,000 employees or fewer. DOE used the small business size standards published on March 11, 2008, as amended, by the SBA to determine whether any small entities would be required to comply with the rule. 61 FR 3286 (codified at 13 CFR part 121). The size standards are listed by North American Industry Classification System (NAICS) code and industry description. GSFL and IRL manufacturing is classified under NAICS 335110, ''Electric Lamp Bulb and Part Manufacturing,'' which sets a threshold of 1,000 employees or less for an entity in this category to be considered a small business.

In overview, the GSFL and IRL industries include both domestic and international manufacturers. The majority of covered GSFL and IRL are manufactured by three large companies, with a small percentage of the market being manufactured by either large or small companies that are primarily specialized in lamps not covered by this rulemaking. Prior to issuing this notice of proposed rulemaking, DOE interviewed one small business affected by the rulemaking. DOE also obtained information about small business impacts while interviewing manufacturers that exceeded the small business size threshold of 1,000 employees.

To better assess the potential impacts of this rulemaking on small entities, DOE proceeded to conduct a more focused inquiry, as explained below. During its market survey, DOE created a list of every company that manufactures covered and non-covered GSFL and IRL for sale in the United States. DOE also asked stakeholders and industry representatives if they were aware of any other small manufacturers. DOE then reviewed publicly-available data and contacted companies on its list, as necessary, to determine whether

[90] U.S. Department of Energy, *Regulatory Impact Analysis: Energy Conservation Standards for Consumer Products, Covering: Fluorescent Lamp Ballasts* (Oct. 1999). Available at: *http://www1.eere.energy.gov/buildings/appliance_standards/residential/pdfs/regulatory_impact.pdf.*

they met the SBA's definition of a small business manufacturer in the GSFL or IRL industries. In total, DOE contacted 57 companies that could potentially be small businesses. During initial review of the 57 companies in its list, DOE either contacted or researched each company to determine if it sold covered GSFL and IRL. Based on its research, DOE screened out companies that did not offer lamps covered by this rulemaking. Consequently, DOE estimated that only 12 out of 57 companies listed were potentially small business manufacturers of covered products. DOE contacted these potential small business manufacturers to request an interview about the possible impacts on small business manufacturers. Of the 12 potential small business manufacturers, four agreed to be interviewed. Based on its initial screening and subsequent interviews, DOE identified only one company as a small business manufacturer based on SBA's definition of a small business manufacturer for this industry. The small business manufacturer that DOE identified only produces covered GSFL products.

DOE found that the small manufacturer of covered GSFL shared some of the same concerns about energy conservation standards as large manufacturers. DOE summarized the key issues in section V.G.4.a of today's notice. However, the small manufacturer was less concerned about the potential of standards to severely harm its business. Because the small manufacturer is more focused on specialty products not covered by this rulemaking, covered GSFL represents a smaller portion of its revenue and product portfolio. In addition, this manufacturer stated that it is possible to pass along cost increases to consumers, thereby limiting margin impacts due to energy conservation standards.

DOE could not use the GSFL GRIM to model the impacts of energy conservation standards on the small business manufacturer of covered GSFL. The GSFL GRIM models the impacts on GSFL manufacturers if concerns about margin pressure and significant capital investments necessitated by standards are realized. The small manufacturer did not share these concerns, and, therefore, the GRIM model would not be representative of the identified small business manufacturer. Like large manufacturers, the small business manufacturer stated that more-efficient products earn a premium; however, unlike larger manufacturers, the small manufacturer stated that it could pass costs along to its customers. Since the GSFL GRIM models the financial impact of the standards commoditizing premium products, it is not representative of the small business manufacturer because the small business manufacturer did not share these concerns. Because of its focus on specialized products, the small manufacturer was more concerned about being able to offer the products to their customers than the impact on its bottom line. For further information about the scenarios modeled in the GRIM, see section VI.B.2.a of today's notice and chapter 13 of the TSD.

DOE seeks further comment on how small businesses could be impacted by standards on GSFL and IRL.

DOE reviewed the standard levels considered in today's notice of proposed rulemaking under the provisions of the Regulatory Flexibility Act and the procedures and policies published on February 19, 2003. On the basis of the foregoing, DOE certifies that this proposed rule, if promulgated, would not have a significant economic impact on a substantial number of small entities. Accordingly, DOE has not prepared a regulatory flexibility analysis for this rulemaking. DOE's certification and supporting statement of factual basis will be provided to the Chief Counsel for Advocacy of the Small Business Administration pursuant to 5 U.S.C. 605(b).

C. Review Under the Paperwork Reduction Act

Under the Paperwork Reduction Act of 1995 (PRA) (44 U.S.C. 3501 *et seq.*), a person is not required to respond to a collection of information by a Federal agency, including a requirement to maintain records, unless the collection displays a valid OMB control number. (44 U.S.C. 3506(c)(1)(B)(iii)(V)) This rulemaking would impose no new information or record keeping requirements. Accordingly, OMB clearance is not required under the PRA.

D. Review Under the National Environmental Policy Act

DOE has prepared a draft environmental assessment (EA) of the impacts of the proposed rule pursuant to the National Environmental Policy Act of 1969 (42 U.S.C. 4321 *et seq.*), the regulations of the Council on Environmental Quality (40 CFR Parts 1500–1508), and DOE's regulations for compliance with the National Environmental Policy Act (10 CFR Part 1021). This assessment includes an examination of the potential effects of emission reductions likely to result from the rule in the context of global climate change, as well as other types of environmental impacts. The draft EA has been incorporated into the TSD. Before issuing a final rule for GSFL and IRL, DOE will consider public comments and, as appropriate, determine whether to issue a finding of no significant impact as part of a final EA or to prepare an environmental impact statement (EIS) for this rulemaking.

E. Review Under Executive Order 13132

Executive Order 13132, ''Federalism,'' 64 FR 43255 (August 4, 1999) imposes certain requirements on agencies formulating and implementing policies or regulations that preempt State law or that have Federalism implications. Agencies are required to examine the constitutional and statutory authority supporting any action that would limit the policymaking discretion of the States and carefully assess the necessity for such actions. The Executive Order also requires agencies to have an accountable process to ensure meaningful and timely input by State and local officials in the development of regulatory policies that have Federalism implications. On March 14, 2000, DOE published a statement of policy describing the intergovernmental consultation process it will follow in the development of such regulations. 65 FR 13735. DOE has examined today's proposed rule and has determined that it would not have a substantial direct effect on the States, on the relationship between the national government and the States, or on the distribution of power and responsibilities among the various levels of government. EPCA governs and prescribes Federal preemption of State regulations on energy conservation for the products that are the subject of today's proposed rule. States can petition DOE for exemption from such preemption to the extent, and based on criteria, set forth in EPCA. (42 U.S.C. 6297(d) and 6316(b)(2)(D)) No further action is required by Executive Order 13132.

F. Review Under Executive Order 12988

With respect to the review of existing regulations and the promulgation of new regulations, section 3(a) of Executive Order 12988, ''Civil Justice Reform'' (61 FR 4729 (Feb. 7, 1996)) imposes on Executive agencies the general duty to adhere to the following requirements: (1) Eliminate drafting errors and ambiguity; (2) write regulations to minimize litigation; and (3) provide a clear legal standard for affected conduct rather than a general standard and promote simplification and burden reduction. Section 3(b) of Executive Order 12988 specifically requires that Executive agencies make

every reasonable effort to ensure that the regulation: (1) Clearly specifies the preemptive effect, if any; (2) clearly specifies any effect on existing Federal law or regulation; (3) provides a clear legal standard for affected conduct while promoting simplification and burden reduction; (4) specifies the retroactive effect, if any; (5) adequately defines key terms; and (6) addresses other important issues affecting clarity and general draftsmanship under any guidelines issued by the Attorney General. Section 3(c) of Executive Order 12988 requires Executive agencies to review regulations in light of applicable standards in section 3(a) and section 3(b) to determine whether they are met or it is unreasonable to meet one or more of them. DOE has completed the required review and determined that, to the extent permitted by law, this proposed rule meets the relevant standards of Executive Order 12988.

G. Review Under the Unfunded Mandates Reform Act of 1995

DOE reviewed this regulatory action under Title II of the Unfunded Mandates Reform Act of 1995 (Pub. L. 104–4) (UMRA), which requires each Federal agency to assess the effects of Federal regulatory actions on State, local and Tribal governments and the private sector. For a proposed regulatory action likely to result in a rule that may cause the expenditure by State, local, and Tribal governments, in the aggregate, or by the private sector of $100 million or more in any one year (adjusted for inflation), section 202 of UMRA requires an agency to publish a written statement assessing the costs, benefits, and other effects of the rule on the national economy. (2 U.S.C. 1532(a), (b)) The UMRA also requires a Federal agency to develop an effective process to permit timely input by elected officers of State, local, and Tribal governments on a proposed ''significant intergovernmental mandate,'' and requires an agency plan for giving notice and opportunity for timely input to potentially affected small governments before establishing any requirements that might significantly or uniquely affect small governments. On March 18, 1997, DOE published a statement of policy on its process for intergovernmental consultation under UMRA (62 FR 12820) (also available at *http://www.gc.doe.gov*). Although today's proposed rule does not contain a Federal intergovernmental mandate, it may impose expenditures of $100 million or more on the private sector.

Section 202 of UMRA authorizes an agency to respond to the content requirements of UMRA in any other statement or analysis that accompanies the proposed rule. 2 U.S.C. 1532(c). The content requirements of section 202(b) of UMRA relevant to a private sector mandate substantially overlap the economic analysis requirements that apply under section 325(o) of EPCA and Executive Order 12866. The **SUPPLEMENTARY INFORMATION** section of the notice of proposed rulemaking and the ''Regulatory Impact Analysis'' section of the TSD for this proposed rule respond to those requirements.

Under section 205 of UMRA, the Department is obligated to identify and consider a reasonable number of regulatory alternatives before promulgating a rule for which a written statement under section 202 is required. DOE is required to select from those alternatives the most cost-effective and least burdensome alternative that achieves the objectives of the rule unless DOE publishes an explanation for doing otherwise or the selection of such an alternative is inconsistent with law. As required by 42 U.S.C. 6295(i) and (o), today's proposed rule would establish energy conservation standards for GSFL and IRL that are designed to achieve the maximum improvement in energy efficiency that DOE has determined to be both technologically feasible and economically justified. A full discussion of the alternatives considered by DOE is presented in the ''Regulatory Impact Analysis'' section of the TSD for today's proposed rule.

H. Review Under the Treasury and General Government Appropriations Act, 1999

Section 654 of the Treasury and General Government Appropriations Act, 1999 (Pub. L. 105–277) requires Federal agencies to issue a Family Policymaking Assessment for any rule that may affect family well-being. This proposed rule would not have any impact on the autonomy or integrity of the family as an institution. Accordingly, DOE has concluded that it is not necessary to prepare a Family Policymaking Assessment.

I. Review Under Executive Order 12630

DOE has determined under Executive Order 12630, ''Governmental Actions and Interference with Constitutionally Protected Property Rights,'' 53 FR 8859 (March 18, 1988), that this regulation would not result in any taking that would require compensation under the Fifth Amendment to the U.S. Constitution.

J. Review Under the Treasury and General Government Appropriations Act, 2001

Section 515 of the Treasury and General Government Appropriations Act, 2001 (44 U.S.C. 3516 note) provides for agencies to review most disseminations of information to the public under guidelines established by each agency pursuant to general guidelines issued by OMB. OMB's guidelines were published at 67 FR 8452 (Feb. 22, 2002), and DOE's guidelines were published at 67 FR 62446 (Oct. 7, 2002). DOE has reviewed today's proposed rule under the OMB and DOE guidelines and has concluded that it is consistent with applicable policies in those guidelines.

K. Review Under Executive Order 13211

Executive Order 13211, ''Actions Concerning Regulations That Significantly Affect Energy Supply, Distribution, or Use,'' 66 FR 28355 (May 22, 2001), requires Federal agencies to prepare and submit to OIRA at OMB, a Statement of Energy Effects for any proposed significant energy action. A ''significant energy action'' is defined as any action by an agency that promulgates or is expected to lead to promulgation of a final rule, and that: (1) Is a significant regulatory action under Executive Order 12866, or any successor order; and (2) is likely to have a significant adverse effect on the supply, distribution, or use of energy; or (3) is designated by the Administrator of OIRA as a significant energy action. For any proposed significant energy action, the agency must give a detailed statement of any adverse effects on energy supply, distribution, or use should the proposal be implemented, and of reasonable alternatives to the action and their expected benefits on energy supply, distribution, and use.

Today's regulatory action is not a ''significant energy action'' because it would not have a significant adverse effect on the supply, distribution, or use of energy, nor has it been designated as such by the Administrator of OIRA. Accordingly, DOE has not prepared a Statement of Energy Effects.

L. Review Under the Information Quality Bulletin for Peer Review

On December 16, 2004, OMB, in consultation with the Office of Science and Technology Policy (OSTP), issued its ''Final Information Quality Bulletin for Peer Review'' (the Bulletin). 70 FR 2664 (Jan. 14, 2005). The Bulletin establishes that certain scientific information shall be peer reviewed by qualified specialists before it is

disseminated by the Federal government, including influential scientific information related to agency regulatory actions. The purpose of the Bulletin is to enhance the quality and credibility of the Government's scientific information. Under the Bulletin, the energy conservation standards rulemaking analyses are ''influential scientific information,'' which the Bulletin defines as ''scientific information the agency reasonably can determine will have, or does have, a clear and substantial impact on important public policies or private sector decisions.'' 70 FR 2664, 2667 (Jan. 14, 2005).

In response to OMB's Bulletin, DOE conducted formal peer reviews of the energy conservation standards development process and analyses, and has prepared a Peer Review Report pertaining to the energy conservation standards rulemaking analyses. Generation of this report involved a rigorous, formal, and documented evaluation process using objective criteria and qualified and independent reviewers to make a judgment as to the technical/scientific/business merit, the actual or anticipated results, and the productivity and management effectiveness of programs and/or projects. The ''Energy Conservation Standards Rulemaking Peer Review Report,'' dated February 2007, has been disseminated and is available at: *http://www.eere.energy.gov/buildings/appliance_standards/peer_review.html*.

VIII. Public Participation

DOE will make the entire record of this proposed rulemaking, including the transcript from the public meeting, available for inspection at the U.S. Department of Energy, Resource Room of the Building Technologies Program, 950 L'Enfant Plaza, SW., Washington, DC 20024, (202) 586–2945, between 9 a.m. and 4 p.m., Monday through Friday, except Federal holidays. Any person may buy a copy of the transcript from the transcribing reporter.

A. Submission of Comments

DOE began accepting comments, data, and information regarding the proposed rule at the public meeting, and will continue to accept comments until no later than the date provided at the beginning of this notice of proposed rulemaking. Information submitted should be identified by docket number EE–2006–STD–0131 and/or RIN 1904–AA92. Comments, data, and information submitted to DOE's e-mail address for this rulemaking should be provided in WordPerfect, Microsoft Word, PDF, or text (ASCII) file format. Stakeholders should avoid the use of special characters or any form of encryption and, wherever possible, comments should carry the electronic signature of the author. Comments, data, and information submitted to DOE via mail or hand delivery/courier should include one signed paper original. No telefacsimiles (faxes) will be accepted.

Pursuant to 10 CFR 1004.11, any person submitting information that he or she believes to be confidential and exempt by law from public disclosure should submit two copies: one copy of the document including all the information believed to be confidential, and one copy of the document with the information believed to be confidential deleted. DOE will make its own determination about the confidential status of the information and treat it according to its determination.

Factors of interest to DOE when evaluating requests to treat submitted information as confidential include: (1) A description of the items; (2) whether and why such items are customarily treated as confidential within the industry; (3) whether the information is generally known by or available from other sources; (4) whether the information has previously been made available to others without obligation concerning its confidentiality; (5) an explanation of the competitive injury to the submitting person which would result from public disclosure; (6) when such information might lose its confidential character due to the passage of time; and (7) why disclosure of the information would be contrary to the public interest.

B. Issues on Which DOE Seeks Comment

DOE is particularly interested in receiving comments and views of interested parties concerning:

(1) The scope of covered products DOE considered in this rulemaking—specifically, DOE's decision to cover 4-foot T5 miniature bipin SO and 4-foot T5 miniature bipin HO lamps;

(2) DOE's decision to amend the definition of ''colored fluorescent lamp'' to exclude lamps with a CCT greater than 7,000K;

(3) The appropriateness of establishing separate product classes for IRL by lamp diameter and rated lamp voltage;

(4) The appropriateness of establishing separate product classes for 4-foot T5 miniature bipin SO and 4-foot T5 miniature bipin HO lamps;

(5) The added 4-foot MBP residential sector engineering analysis, particularly the choice of the baseline system (lamp and ballast);

(6) The performance characteristics (*e.g.*, lumen output, lifetime, wattage) established for both GSFL and IRL model lamps DOE used in the engineering analysis—specifically, the properties of the T5 halophosphor GSFL baseline lamps and the improved halogen IRL that uses xenon as a fill gas (the lamp established for TSL1);

(7) The efficacy levels DOE considered for IRL, in particular the added EL1 and EL5;

(8) The efficacy levels DOE used for each GSFL product class—particularly, DOE's decision to use compliance report data to establish GSFL efficacy levels;

(9) The methodology DOE used to scale efficacy levels from representative product classes to product classes DOE did not analyze (*i.e.*, 2-foot U-shaped lamps and high CCT lamps for GSFL, modified spectrum lamps, lamps with diameters less than or equal to 2.5 inches, lamps with rated voltage greater than 125V);

(10) The choice of ballast lifetimes DOE used in the commercial, residential, and industrial sectors and operating hours for GSFL in the residential sector;

(11) The growth rates DOE used in the residential sector IRL and GSFL shipments analysis, the market penetration of emerging technologies in the IRL and GSFL shipments analysis, and the T5 lamp shipment forecasts;

(12) Base-case market-share matrices and standards-case market-share matrices for IRL and GSFL—particularly the percentage of GSFL consumers with sufficient lighting expertise (*i.e.*, those consumers who will choose a lower-BF ballast or reduced-wattage lamp to maintain lumen output under standards) by market segment;

(13) The methodology and inputs DOE used for the manufacturer impact analysis—specifically, DOE's assumptions regarding markups, capital costs, conversion costs, and stranded assets;

(14) The determination of the environmental impacts of the proposed rule—specifically, methods for valuing the CO_2, NO_X, SO_X, and Hg emissions savings due to the proposed standards;

(15) The appropriateness of trial standard levels DOE considered for GSFL and IRL, in particular the combinations of efficacy levels of each GSFL product class;

(16) The proposed standard levels for GSFL and IRL;

(17) Alternative scenarios for GSFL standards that could achieve greater energy savings. One example may be for DOE to adopt a more stringent standard level in the final rule that would eliminate T12 lamps, as described in

relation to TSL4 and TSL5. Another example may be for DOE to adopt a more stringent standard level in the final rule that, similar to TSL4 and TSL5, would eliminate T12 lamps, but allow an extended lead time before compliance would be required. A third example may be for DOE to adopt a more stringent standard level, while continuing to allow the sale of specially packaged or labeled T12 lamps in the residential sector only.

(18) Other technology pathways that may be utilized to meet IRL TSL5, whether these pathways may have any adverse effects on consumer utility or the ability for the product to be mass-produced, manufacturer costs associated with these pathways, and resulting consumer product prices for lamps that meet this standard level.

IX. Approval of the Office of the Secretary

The Secretary of Energy has approved publication of this proposed rule.

List of Subjects in 10 CFR Part 430

Administrative practice and procedure, Confidential business information, Energy conservation, Household appliances, Imports, Intergovernmental relations, Small businesses.

Issued in Washington, DC on March 23, 2009.

Steven G. Chalk,

Principal Deputy Assistant Secretary, Energy Efficiency and Renewable Energy.

For the reasons stated in the preamble, DOE proposes to amend chapter II, subchapter D, of title 10 of the Code of Federal Regulations as set forth below:

PART 430—ENERGY CONSERVATION PROGRAM FOR CONSUMER PRODUCTS

1. The authority citation for Part 430 continues to read as follows:

Authority: 42 U.S.C. 6291–6309; 28 U.S.C. 2461 note.

2. Section 430.2 is amended by revising the definition of ''colored fluorescent lamp,'' ''fluorescent lamp,'' and ''rated wattage'' to read as follows:

§ 430.2 Definitions.

* * * * *

Colored fluorescent lamp means:

(1) A fluorescent lamp designated and marketed as a colored lamp with a CRI less than 40, as determined according to the method given in CIE Publication 13.2 (incorporated by reference, see § 430.3);

(2) A fluorescent lamp designed and marketed as a colored lamp with a correlated color temperature (CCT) less than 2,500K; or

(3) A fluorescent lamp with a CCT greater than 7,000K.

* * * * *

Fluorescent lamp means a low pressure mercury electric-discharge source in which a fluorescing coating transforms some of the ultraviolet energy generated by the mercury discharge into light, including only the following:

(1) Any straight-shaped lamp (commonly referred to as 4-foot medium bipin lamps) with medium bipin bases of nominal overall length of 48 inches and rated wattage of 25 or more;

(2) Any U-shaped lamp (commonly referred to as 2-foot U-shaped lamps) with medium bipin bases of nominal overall length between 22 and 25 inches and rated wattage of 25 or more;

(3) Any rapid start lamp (commonly referred to as 8-foot high output lamps) with recessed double contact bases of nominal overall length of 96 inches;

(4) Any instant start lamp (commonly referred to as 8-foot slimline lamps) with single pin bases of nominal overall length of 96 inches and rated wattage of 52 or more;

(5) Any straight-shaped lamp (commonly referred to as 4-foot miniature bipin standard output lamps) with miniature bipin bases of nominal length between 45 and 48 inches and rated wattage of 26 or more; and

(6) Any straight-shaped lamp (commonly referred to 4-foot miniature bipin high output lamps) with miniature bipin bases of nominal length between 45 and 48 inches and rated wattage of 51 or more.

* * * * *

Rated wattage, with respect to general service fluorescent lamps, means:

(1) If the lamp is listed in ANSI C78.81–2005 or ANSI C78.901–2005, the rated wattage of a lamp determined by the lamp designation of Clause 11.1 of ANSI C78.81–2005 or ANSI C78.901–2005;

(2) If the lamp is a residential straight-shaped lamp, and not listed in ANSI C78.81–2005, the wattage of a lamp when operated on a reference ballast for which the lamp is designed;

(3) If the lamp is neither listed in one of the ANSI guides referenced in (1) nor a residential straight-shaped lamp, the wattage of a lamp when measured according to the test procedures outlined in Appendix R to subpart B of this part; or

(4) With respect to general service incandescent lamps and incandescent reflector lamps, the wattage measured according to the test procedures outlined in Appendix R to subpart B of this part.

* * * * *

3. Section 430.32 is amended by revising paragraph (n) to read as follows:

§ 430.32 Energy and water conservation standards and their effective dates.

* * * * *

(n) *General service fluorescent lamps and incandescent reflector lamps.* (1) Except as provided in paragraphs (n)(2) and (n)(3) of this section, each of the following general service fluorescent lamps manufactured after the effective dates specified in the table shall meet or exceed the following lamp efficacy and CRI standards:

Lamp type	Nominal lamp wattage	Minimum CRI	Minimum average lamp efficacy (lm/W)	Effective date
4-foot medium bipin	> 35W	69	75.0	Nov. 1, 1995
	≤ 35W	45	75.0	Nov. 1, 1995.
2-foot U-shaped	> 35W	69	68.0	Nov. 1, 1995.
	≤ 35W	45	64.0	Nov. 1, 1995.
8-foot slimline	> 65W	69	80.0	May 1, 1994.
	≤ 65W	45	80.0	May 1, 1994.
8-foot high output	> 100W	69	80.0	May 1, 1994.
	≤ 100W	45	80.0	May 1, 1994.

(2) The standards described in paragraph (n)(1) of this section do not apply to:

(i) Any 4-foot medium bipin lamp or 2-foot U-shaped lamp with a rated wattage less than 28 watts;

(ii) Any 8-foot high output lamp not defined in ANSI C78.1–1978 or related supplements, or not 0.800 nominal amperes; or

(iii) Any 8-foot slimline lamp not defined in ANSI C78.3–1978 (R1984) or related supplement ANSI C78.3a–1985.

(3) Each of the following general service fluorescent lamps manufactured after June 30, 2012, shall meet or exceed the following lamp efficacy standards shown in the table:

Lamp type	Correlated color temperature	Minimum average lamp efficacy (lm/W)
4-foot medium bipin	≤ 4,500K	84
	> 4,500K	78
2-foot U-shaped	≤ 4,500K	78
	> 4,500K	73
8-foot slimline	≤ 4,500K	95
	> 4,500K	91
8-foot high output	≤ 4,500K	88
	> 4,500K	84
4-foot miniature bipin standard output	≤ 4,500K	103
	> 4,500K	97
4-foot miniature bipin high output	≤ 4,500K	89
	> 4,500K	85

(4) Except as provided in paragraph (n)(5) of this section, each of the following incandescent reflector lamps manufactured after November 1, 1995, shall meet or exceed the lamp efficacy standards shown in the table:

Nominal lamp wattage	Minimum average lamp efficacy (lm/W)
40–50	10.5
51–66	11.0
67–85	12.5
86–115	14.0
116–155	14.5
156–205	15.0

(5) Each of the following incandescent reflector lamps manufactured after June 30, 2012, shall meet or exceed the lamp efficacy standards shown in the table:

Lamp spectrum	Lamp diameter	Rated voltage	Minimum average lamp efficacy (lm/W)
Standard Spectrum	> 2.5″	≥ 125V	$7.1P^{0.27}$
		< 125V	$6.2P^{0.27}$
	≤ 2.5″	≥ 125V	$6.3P^{0.27}$
		< 125V	$5.5P^{0.27}$
Modified Spectrum	> 2.5″	≥ 125V	$5.8P^{0.27}$
		< 125V	$5.0P^{0.27}$
	≤ 2.5″	≥ 125V	$5.1P^{0.27}$
		< 125V	$4.4P^{0.27}$

NOTE: P is equal to the rated lamp wattage, in watts.

(6)(i)(A) Subject to the exclusions in paragraph (6)(ii) of this section, the standards specified in this section shall apply to ER incandescent reflector lamps, BR incandescent reflector lamps, BPAR incandescent reflector lamps, and similar bulb shapes on and after January 1, 2008.

(B) Subject to the exclusions in paragraph (6)(ii) of this section, the standards specified in this section shall apply to incandescent reflector lamps with a diameter of more than 2.25 inches, but not more than 2.75 inches, on and after June 15, 2008.

(ii) The standards specified in this section shall not apply to the following types of incandescent reflector lamps:

(A) Lamps rated at 50 watts or less that are ER30, BR30, BR40, or ER40 lamps;

(B) Lamps rated at 65 watts that are BR30, BR40, or ER40 lamps; or

(C) R20 incandescent reflector lamps rated 45 watts or less.

[FR Doc. E9–7634 Filed 4–10–09; 8:45 am]

BILLING CODE 6450–01–P

Federal Register

Monday,
April 13, 2009

Part III

Department of Commerce

National Oceanic and Atmospheric Administration

50 CFR Part 648

Fisheries of the Northeastern United States; Northeast Multispecies Fishery; Secretarial Interim Action; Final Rule

DEPARTMENT OF COMMERCE

National Oceanic and Atmospheric Administration

50 CFR Part 648

[Docket No. 080521698–9067–02]

RIN 0648–AW87

Fisheries of the Northeastern United States; Northeast Multispecies Fishery; Secretarial Interim Action

AGENCY: National Marine Fisheries Service (NMFS), National Oceanic and Atmospheric Administration (NOAA), Commerce.

ACTION: Temporary final rule; interim measures; request for comments.

SUMMARY: NMFS implements this final interim rule pursuant to its authority to issue interim management measures under the authority of the Magnuson-Stevens Fishery Conservation and Management Act (Magnuson-Stevens Act). This action is intended to immediately reduce overfishing on certain stocks managed by the Northeast (NE) Multispecies Fishery Management Plan (FMP), without jeopardizing the likelihood that overfished stocks can achieve rebuilding objectives until long-term measures can be implemented under Amendment 16 to the FMP. Measures for the commercial fishery include an expanded differential days-at-sea (DAS) area in Southern New England (SNE), where a vessel will be charged 2 days for every day fished, and modified groundfish trip limits. In addition, this action maintains the scheduled fishing year (FY) 2009 DAS reduction included in the FMP, which results in an approximate 18-percent reduction in Category A DAS. For private recreational vessels fishing in the Exclusive Economic Zone (EEZ), and for federally permitted charter/party vessels, this action extends in time a seasonal prohibition on the possession of Gulf of Maine (GOM) cod, and prohibits the possession of SNE/Mid-Atlantic (MA) winter flounder. For federally permitted charter/party vessels, this action implements a trip limit for Georges Bank (GB) cod. In addition, this action implements measures to mitigate some of the negative, short-term economic impacts of the FMP by expanding the Closed Area I (CA I) Hook Gear Haddock Special Access Program (SAP); modifying the DAS Leasing Program, the Regular B DAS Program, and the DAS Transfer Program; continuing the Eastern U.S./Canada Haddock SAP; and implementing a reduction in the haddock minimum size to 18 inches (45 cm) for both commercial and recreational vessels. This action also specifies management measures for the U.S./Canada Management Area for FY 2009. NMFS anticipates that the interim measures will need to be renewed upon the rule's expiration for an additional 185 days. Therefore, NMFS is requesting public comments on these measures; comments received will be considered during any subsequent action to extend this final interim rule.

DATES: Effective May 1, 2009, through October 28, 2009. Comments must be received by June 12, 2009.

ADDRESSES: You may submit comments, identified by 0648–AW87, by any one of the following methods:

- *Electronic Submissions:* Submit all electronic public comments via the Federal e-rulemaking portal: *http://www.regulations.gov*.
- *Mail:* Paper, disk, or CD–ROM comments should be sent to Patricia A. Kurkul, Regional Administrator, National Marine Fisheries Service, 55 Great Republic Drive, Gloucester, MA 01930–2276. Mark the outside of the envelope: ''Comments on NE Multispecies Final Interim Rule.''
- *Fax:* (978) 281–9135.

Instructions: All comments received are part of the public record and will generally be posted to *http://www.regulations.gov* without change. All Personal Identifying Information (for example, name, address, etc.) voluntarily submitted by the commenter may be publicly accessible. Do not submit confidential business information or otherwise sensitive or protected information.

NMFS will accept anonymous comments (enter ''N/A'' in the required fields, if you wish to remain anonymous). Attachments to electronic comments will be accepted in Microsoft Word, Excel, WordPerfect, or Adobe PDF formats only.

NMFS prepared a Final Regulatory Flexibility Analysis (FRFA), which consists of the Initial Regulatory Flexibility Analysis (IRFA), public comments and responses, and the summary of impacts and alternatives contained in the Classification section of the preamble of this final rule. Copies of the small entity compliance guide are available from the Regional Administrator, NMFS, Northeast Regional Office, at the address noted above. Copies of the Environmental Assessment (EA) prepared for this rule may be found at the following Internet address: *http://www.nero.noaa.gov/nero/regs/frdoc/08/08MultiInterimEA.pdf*.

Written comments regarding the burden-hour estimates or other aspects of the collection-of-information requirements contained in this rule may be submitted to the Northeast Regional Office and by e-mail to *David_Rostker@omb.eop.gov*, or fax to (202) 395–7285.

FOR FURTHER INFORMATION CONTACT: Thomas Warren, Fishery Policy Analyst, (978) 281–9347, fax (978) 281–9135.

SUPPLEMENTARY INFORMATION: A proposed interim rule was published in the **Federal Register** on January 16, 2009 (74 FR 2959), which includes detailed information on the background and reasons pertinent to the need to reduce fishing effort in the NE multispecies fishery for FY 2009. Comments on the proposed rule were accepted through February 17, 2009, which are summarized and responded to below. The FMP specifies the management measures for 12 species, and a total of 19 stocks of groundfish in Federal waters off the New England and Mid-Atlantic coasts. Species managed by the FMP are Atlantic cod, haddock, yellowtail flounder, pollock, American plaice, witch flounder, white hake, windowpane flounder, Atlantic halibut, winter flounder, ocean pout, and redfish. In 2008, the effectiveness of the management measures and the validity of the status determination criteria (biological reference points) were fully evaluated. This planned assessment of the biological reference points (Groundfish Assessment Review Meeting (GARM III)) was part of the FMP's biennial adjustment process to be used for setting fishery measures for FY 2009 (May 1, 2009–April 30, 2010), and was also part of the rebuilding strategy, which sought to evaluate the more fundamental scientific information mid-way through the rebuilding period for most stocks. Although the Council intended to meet a required May 1, 2009, implementation date for Amendment 16, due to the timing and the somewhat unanticipated results from GARM III (September 2008), the Council developed a revised Amendment 16 schedule, which, if approved, is now expected to be implemented on May 1, 2010. In addition, the Council voted on September 4, 2008, to request that NMFS implement an interim action for the duration of FY 2009, and recommended a specific suite of management measures for the interim action. As explained fully in Measure 12 under ''Proposed Commercial Measures'' of the proposed rule, NMFS did not propose the Council's recommendations in the proposed rule

because NMFS believed that the Council's recommended alternative would allow overfishing to continue for several stocks and not achieve rebuilding objectives.

A summary of the GARM III results that formed the basis for the proposed interim rule is in Table 1 below. Overfishing is occurring on stocks when the ratio of the fishing mortality rate (F) to the F that results in the maximum sustainable yield (MSY) (Fmsy) is greater than 1.0, and a stock is overfished if the ratio of the biomass level (B) to the B that produces MSY (Bmsy) is equal to or less than 0.5.

TABLE 1—GARM III STOCK STATUS DETERMINATION CRITERIA AND 2007 STATUS

Species	Stock	Fmsy	Bmsy (mt)	2007 Fishing mortality (2007 F/Fmsy)	2007 Biomass (2007 B/Bmsy)	Estimated 2008 fishing mortality
Cod	GB	0.2466	148,084	1.2	0.12	0.41
	GOM	0.237	58,248	1.9	0.58	0.300
Haddock	GB	0.350	158,873	0.49	2.05	0.083
	GOM	0.430	5,900	0.8	0.99	0.250
Yellowtail flounder	GB	0.254	43,200	1.1	0.22	0.130
	SNE/MA	0.254	27,400	1.6	0.13	0.120
	CC/GOM	0.239	7,790	1.7	0.25	0.289
American plaice		0.190	21,940	0.5	0.51	0.099
Witch flounder		0.200	11,447	1.5	0.30	0.296
Winter flounder	GB	0.260	16,000	1.1	0.31	0.131
	GOM	0.283	3,792	1.5	0.29	0.317
	SNE/MA	0.248	38,761	2.6	0.09	0.265
Redfish		0.038	271,000	0.1	0.64	0.008
White hake		0.125	56,254	1.2	0.35	0.065
Pollock*		5.660	2.0	1.9	0.45	10.975
Windowpane*	North	0.500	1.4	3.9	0.38	1.96
	South	1.470	0.34	1.3	0.62	1.85
Ocean pout		0.760	4.94	0.5	0.10	N/A
Atlantic halibut		0.073	49,000	0.9	0.03	0.06

* Pollock and windowpane flounder information was revised subsequent to GARM III in order to utilize 3-yr averages, and incorporate the fall survey data for pollock; pollock Fmsy is listed in terms of relative exploitation index (catch per centered 3-yr survey index).
N/A indicates an estimate of F in 2008 was unavailable for this stock.

Although NMFS' initial fishing mortality rate goals for the FY 2009 interim period are unchanged, based on public comment, NMFS is modifying several of the measures proposed in the proposed interim rule, and asking for public comment on the modified final rule. This decision to modify measures means that, even though substantial reductions in F will be achieved by this rule, overfishing will continue on certain stocks—notably GB cod, witch flounder, pollock, and northern windowpane flounder—during the duration of this interim action. Under section 305(c) of the Magnuson-Stevens Act, NMFS may implement an interim rule that reduces overfishing on overfished stocks, without necessarily ending overfishing. In this instance, the purpose of the interim rule is to reduce or end overfishing and help ensure that stocks rebuild consistent with Amendment 13 objectives for FY 2009, and to reduce overfishing on the three other stocks, which were recently identified as being overfished. The measures implemented through this rule will satisfy these objectives, while at the same time mitigating, to the extent practicable, the impacts on the fishing community. As indicated by the EA and the comments received on the proposed rule, ending overfishing on all multispecies stocks in this interim rule would result in substantial negative consequences to the fishing industry. The Council is developing mitigating measures in Amendment 16, primarily through sector proposals, that should help to offset these negative consequences. The full range of possible mitigation measures cannot be implemented in this interim rule because they have not been fully developed and analyzed. While there is some decrease in the likelihood that GB cod and other stocks will rebuild within the time prescribed by the Amendment 13 rebuilding plan as a result of this final rule, the action should not significantly jeopardize the likelihood that Amendment 13's rebuilding objectives will be met, particularly given the short-term nature of this interim rule and the fact that additional measures will be implemented through Amendment 16. Therefore, in exercising the flexibility provided by section 305(c) of the Magnuson-Stevens Act, NMFS has determined that the modifications to the proposed rule as described below are justifiable because they are necessary to mitigate impacts on the fishing industry to the extent practicable, without fatally jeopardizing the likelihood that overfished multispecies stocks will achieve their rebuilding objectives through Amendment 16 measures. The rationale for determining the extent of acceptable changes to the proposed rule follows.

Generally speaking, these final interim measures reduce overfishing to a lesser degree than the proposed interim action, as explained later in this preamble. This action includes several elements of the Council's proposed alternative, but contains additional measures to further protect stocks that are in the most critical condition, such as SNE/MA winter flounder. Management measures implemented under this action include: An expansion of the status quo 2:1 SNE Differential DAS Area measures; a witch flounder trip limit of 1,000 lb (453.6 kg) per DAS, up to 5,000 lb (2,268 kg) per trip; zero retention limits for SNE winter flounder (for both commercial and recreational vessels), northern windowpane flounder, and ocean pout; a 2-week extension of the seasonal prohibition on the retention of GOM cod for both private recreational and party/charter vessels, (i.e., revised to encompass

November through April 15); a bag limit of 10 GB cod per person per day for party/charter vessels operating in all areas; and mitigation measures that include modifications to the DAS Leasing, Transfer, and Regular B DAS Programs, expansion in area and season of the CA I Hook Gear Haddock SAP, renewal of the Eastern U.S./Canada Haddock SAP, and reduction of the haddock minimum fish size from 19 inches (48.3 cm) to 18 inches (45.7 cm) for both commercial and recreational vessels. This action does not implement the proposed expansion of the GOM Differential DAS Area (i.e., the Interim Differential DAS Area), or the proposed SNE Closure Area. In addition, this action maintains the Amendment 13 default measure for FY 2009, whereby Category A DAS are reduced by 18.2 percent, and maintains the status quo 2:1 GOM Differential DAS Area measures.

For reasons explained in the preamble to the proposed interim rule, the proposed fishing mortality targets were either Fmsy (for windowpane flounder, GOM winter flounder, GB winter flounder, witch flounder, pollock, GB haddock, GOM haddock, GOM cod, GB cod, American plaice, redfish, and ocean pout), or Frebuild (GB cod, GB yellowtail flounder, SNE/MA yellowtail flounder, Cape Cod (CC)/GOM yellowtail flounder, SNE/MA winter flounder, white hake, and Atlantic halibut). The proposed interim measures would not have achieved Frebuild for GB cod; however, they would have achieved Fmsy for this stock. The proposed measures also would not have achieved the Fmsy target for northern windowpane flounder, or the Frebuild target for SNE/MA winter flounder.

GARM III provided example estimates of Frebuild for overfished stocks, making assumptions about the rebuild period end-dates and the starting stock conditions at the beginning of the rebuilding periods. In doing so, GARM III assumed that the catch in FY 2008 will be the same as the catch in FY 2007. In contrast, for this interim action, an estimated catch in FY 2008 was used to recalculate the starting stock conditions in FY 2008, and the associated Frebuilds. For Amendment 16, the Council's Plan Development Team (PDT) estimated catch for the entire FY 2008 based upon an extrapolation of landings data for calendar year (CY) 2008 through June 2008. As explained further in the proposed interim rule preamble, this interim action relies on the PDT's estimated landings for FY 2008, and derived estimates of fishing mortality rates for CY 2008 and the recalculated Frebuilds. Because the measures implemented by this action will be effective in FY 2009, an estimate of fishing mortality in CY 2008 more closely represents the starting conditions of the remainder of the rebuilding periods. For GB yellowtail flounder, Frebuild was calculated utilizing an assumed catch in CY 2008 of 2,500 mt.

The target reductions for pollock and the two windowpane flounder stocks were revised from the proposed rule in order to be consistent with the other stocks. In the proposed rule, the target reductions for all stocks except these three were based upon an estimate of fishing mortality in 2008. In contrast, the target reductions for pollock and the two stocks of windowpane flounder were based upon the fishing mortality in 2007. Thus, this final rule utilizes a starting fishing mortality estimate in 2008 for all stocks. Because the estimate of fishing mortality in 2008 was greater than that observed in 2007 for these three stocks, the effect of this change is an increase in the percentage reduction necessary to reduce fishing mortality to Fmsy. For the calculation of F in 2008, for pollock, the PDT calculated an assumed catch in 2008 and for the windowpane flounder stocks, catch in 2008 was assumed to be equal to the catch in 2007.

In contrast to the proposed interim rule, which would not have attained the proposed interim goals for two stocks (i.e., SNE/MA winter flounder and Northern windowpane flounder), nor the updated Fmsy goal for pollock (which was updated after the proposed interim rule was published), management measures implemented through this final rule do not attain the stated goals for five stocks (SNE/MA winter flounder, Northern windowpane flounder, pollock, GB cod, and witch flounder). However, for four of these five stocks, the rebuilding timeline extends beyond 2014 (a 2026 Amendment 13 end date for GB cod; and a 2017 Amendment 16 proposed end date for Northern windowpane flounder, witch flounder, and pollock). Because these four stocks have longer rebuilding timelines associated with them, additional time is available to ensure that the rebuilding goals of the FMP are met. However, to maintain the FMP rebuilding trajectories and to meet the statutory rebuild dates, the Council will need to consider whether further adjustments in fishing mortality are needed. If further adjustments are needed, the Council will need to account for this in future actions, possibly even in Amendment 16. Given the likely rebuilding schedules and the original justification for the expanded differential DAS counting area in the GOM and northern GB in the proposed interim rule (primarily to protect pollock and witch flounder), NMFS is not implementing the proposed expanded differential DAS counting area in this final rule, and is maintaining the status quo inshore GOM Differential DAS Area. The SNE Closure Area was included in the proposed interim rule primarily to protect SNE/MA winter flounder. Although this stock has a rebuilding timeline of 2014, given the concern raised by the public regarding the severe economic impacts that would be imposed by this closure area and the potential for this closure to lead to shifts in effort to other areas and other stocks, NMFS is instead implementing in this same area, slightly modified, a requirement for 2:1 differential DAS counting. To strictly control effort on SNE/MA winter flounder, NMFS is implementing a zero landing limit for SNE/MA winter flounder for both commercial and recreational vessels throughout the range of the stock. Table 2 identifies the 2009 target Fs as published in the proposed interim rule, and provides a comparison of the estimated fishing mortality reductions achieved for measures proposed in the proposed interim rule, and the measures implemented by this final interim rule.

TABLE 2—COMPARISON OF FISHING MORTALITY REDUCTIONS FOR THE PROPOSED AND FINAL INTERIM RULES

Species	Stock	2009 proposed F target	F reduction objective	F value for proposed interim action	F reduction achieved	F value for final interim action	F reduction achieved
Cod	GB	0.247 (Fmsy)	−40%	0.208	−49%	0.295	−28%

TABLE 2—COMPARISON OF FISHING MORTALITY REDUCTIONS FOR THE PROPOSED AND FINAL INTERIM RULES—Continued

Species	Stock	2009 proposed F target	F reduction objective	F value for proposed interim action	F reduction achieved	F value for final interim action	F reduction achieved
	GOM	0.237 (Fmsy)	−21%	0.203	−32%	0.247	−18%
Haddock	GB	0.350 (Fmsy)	322%	0.049	−38%	0.062	−25%
	GOM	0.430 (Fmsy)	72%	0.159	−36%	0.205	−18%
Yellowtail Flounder	GB	0.109 (Freb)	−16%	0.109	−16%	0.109	−16%
	SNE/MA	0.072 (Freb)	−38%	0.017	−86%	0.073	−39%
	CC/GOM	0.238 (Freb)	−18%	0.174	−40%	0.167	−42%
American Plaice		0.190 (Fmsy)	92%	0.056	−43%	0.084	−15%
Witch Flounder		0.200 (Fmsy)	−32%	0.167	−44%	0.247	−17%
Winter Flounder	GB	0.260 (Fmsy)	98%	0.108	−18%	0.114	−13%
	GOM	0.283 (Fmsy)	−11%	0.286	−10%	0.265	−16%
	SNE/MA	0.000 (Freb)	−100%	0.052	−80%	0.100	−62%
Redfish		0.038 (Fmsy)	375%	0.004	−50%	0.007	−13%
White Hake		0.084 (Freb)	29%	0.033	−49%	0.054	−17%
Pollock		5.660 (Fmsy)	−51%	6.520	NA	9.342	−19%
Windowpane Flounder	North	0.500 (Fmsy)	−83%		NA	2.229	−22%
	South	1.470 (Fmsy)	−29%		NA	1.392	−32%
Ocean Pout		7.600 (Fmsy)	NA		NA		
Atlantic halibut		0.044 (Freb)	−27%		NA		

Because of the substantial changes made to the proposed interim measures, and the resulting changes in the expected Fs as a consequence of these changes, this final rule also implements revised target TACs and Incidental Catch TACs. The target TACs, and the Incidental TACs that are based on these targets, are specified as follows: For those stocks where the measures implemented by this rule are expected to reduce F to below the F target, the target TACs are set based on the estimated F achieved from the management measures in this action; for those stocks with Fs that are less than the proposed rule F targets, the target TACs will be set based on the proposed F targets. See Measure 3 under ''Approved Commercial Measures'' for further details on these final target TACs.

Management Measures

All measures in effect prior to May 1, 2009, including the scheduled default DAS reduction measures, that are not amended by this final interim rule, will remain in effect on and after May 1, 2009. This interim action implements management measures to reduce fishing mortality on the commercial and recreational fisheries without compromising rebuilding objectives, and revises several management programs to mitigate the negative economic and social impacts. The interim action is intended to ensure consistency, to the extent practicable in an interim rule, with the national standards and required provisions of the Magnuson-Stevens Act. This action also specifies target TACs for all managed stocks, and annual specifications for stocks managed by the U.S./Canada Resource Sharing Understanding (Understanding). As is more fully discussed later in this document, these measures will result in both quantifiable and non-quantifiable reductions in fishing mortality for all of the NE multispecies stocks managed under the FMP.

The interim measures are designed to work in conjunction with the FMP to reduce fishing mortality and continue to maintain progress toward achieving the rebuilding requirements of the FMP. The analysis of this action presumes that the measures will be in effect throughout FY 2009, and that a subsequent management action (Amendment 16) will be implemented on May 1, 2010. The FMP management measures include an FY 2009 default measure that will change the allocation ratio of Category A:B DAS from 55:45 to 45:55. This measure, because it is not an action implemented by this interim action, is not discussed specifically in the description of the interim measures that follow. In addition, this action continues existing measures in the FMP associated with the GOM Differential DAS Area, as discussed further below. NMFS anticipates that this interim action will be renewed upon its expiration for an additional 185 days, given that the Council does not anticipate the implementation of Amendment 16 until May 2010 and that the Council recommended that any interim action implemented by NMFS should be in effect for all of FY 2009. Several measures were modified from the proposed to the final rule based upon public comments received and further analysis of proposed measures, to mitigate the negative economic impacts of the management measures on the fishing industry and fishing communities without compromising long-term rebuilding of overfished stocks. Although these revisions will

result in less reduction to fishing mortality than the measures proposed, such changes should not undermine efforts to rebuild stocks within the established timeframes. Such measures will continue to reduce F on all stocks and eliminate overfishing on all but four stocks (pollock, GB cod, witch flounder, and northern windowpane flounder). Three of these stocks are newly classified as overfished (pollock, witch flounder, and northern windowpane flounder), and the rebuilding programs developed by the Council in draft Amendment 16 include rebuilding timelines extending to 2017. The rebuilding timeline for GB cod extends through 2026. Given this, there should be sufficient opportunity for future management actions to end overfishing and rebuild these stocks, as necessary. The following describes the measures implemented by this final interim rule.

Approved Commercial Measures

1. Differential DAS Counting

This action maintains the existing differential DAS counting area in the GOM, as established in the FMP. However, in SNE, the existing SNE Differential DAS Area is replaced by the Interim SNE Differential DAS Area. This area includes waters between 40°30′ and 41°30′ N. lat., and west of 68°50′ W. long. (i.e., west of the border of the Western U.S./Canada Area) to the shore, including all of Nantucket Sound and the Great South Channel. The Interim SNE Differential DAS Area is being implemented primarily as a means to reduce F on SNE winter flounder and SNE/MA yellowtail flounder.

With the exception of vessels fishing with hook gear in the Interim SNE Differential DAS Area, all NE multispecies vessels declared into and fishing under a NE multispecies Category A DAS within either the GOM or Interim SNE Differential DAS Areas for any portion of a trip will be charged at a rate of 2:1 for the entire trip. In other words, with the exception noted above, if a vessel declares into, and fishes in, either the GOM or Interim SNE Differential DAS Area for 10 hr, the vessel's DAS balance would be charged 20 hr. NE multispecies vessels declared into and fishing under a Category A DAS in the Interim SNE Differential DAS Area using hook gear will be charged DAS at a rate of 1:1, provided such vessels have only hook gear on board. The hook gear exception to the differential DAS counting rate is based upon data that indicate that the catch rate of winter flounder and yellowtail flounder, the primary species targeted by this measure, by hook gear is likely to be very low and, in conjunction with a zero retention limit for SNE winter flounder, will not substantially affect F reductions achieved by this action.

A vessel will not be charged at the differential DAS rate if it declares into and transits to another area outside of one of the differential DAS areas. For example, if a vessel steams through the GOM Differential DAS Area on its way to and from the fishing grounds in the U.S./Canada Management Area, where DAS are not counted differentially, it will not be charged at the 2:1 rate for the parts of the trip spent steaming through the GOM Differential DAS Area. If a vessel declares and fishes both inside and outside of the GOM Differential DAS Area or the Interim SNE Differential DAS Area on the same trip, it will be charged differential DAS at a rate of 2:1 for the entire trip. This does not change the way that DAS are charged for vessels fishing in the GOM Differential DAS Area. However, charging differential DAS at a rate of 2:1 for the entire trip does represent a change in the way DAS are currently charged under the existing SNE Differential DAS Area implemented under FW 42. This change is based upon the revised area encompassed by the Interim Differential DAS Area, as further explained in the response to Comment 15.

Consistent with current regulations, vessels are required to declare their intent to fish in one or both of the differential DAS areas via the vessel monitoring system (VMS) prior to leaving port. However, the Administrator, Northeast Region, NMFS (Regional Administrator) currently has the authority to require the fishery to utilize the ''call-in system'' on a temporary basis instead of the VMS for DAS accounting if the vessel fishes inside/outside of the VMS demarcation line on the same trip, if the VMS system was down for an extended period of time, or for some other unforeseen circumstance. In such a circumstance, vessels fishing any portion of a trip inside one or both of the differential DAS areas will be charged at the rate of 2:1 for the entire trip.

The interaction of current groundfish and non-groundfish regulatory programs and the different DAS counting rules remain unchanged under this action (e.g., the cod running clock, DAS charging rules for Day gillnet vessels, the application of daily possession limits for certain stocks, the Eastern U.S./Canada Area rules, use of Regular B DAS, and monkfish/groundfish permitted vessels fishing under a NE multispecies DAS). For example, a vessel fishing in the GOM Differential DAS Area for 25 hr that caught 1,600 lb (726 kg) of GOM cod (i.e., 2 day's worth) would not be required to submit the cod running clock form via VMS in order to account for the additional day's worth of cod harvested. In addition, a Day gillnet vessel declared into and fishing in the GOM Differential DAS Area would be charged DAS at a rate of 2:1 for any trip less than or equal to 3 hr in duration, or greater than 7.5 hr in duration and 15 hr for any trip greater than 3 hr, or less than or equal to 7.5 hr in duration. For vessels fishing in multiple geographic areas in which different rules apply (such as differential DAS counting and trip limits), the most restrictive rule would apply for the entire trip. The current regulations that allow monkfish Category C and D vessels to fish as a monkfish Category A or B vessel, and land monkfish under certain conditions, will still apply. As described in detail below under Item 9 ''Mitigating Measures,'' the DAS rules that apply to monkfish Category C and D vessels fishing in the GOM Differential DAS Area are modified by this action to minimize any impact these measures may have on the ability of such vessels to fish for monkfish.

2. Modified Trip Limits

Under this interim rule, NE multispecies vessels are not allowed to fish for, possess, or land more than 1,000 lb (453.6 kg) per DAS, up to 5,000 lb (2,268 kg) per trip of witch flounder. In addition, no retention of SNE winter flounder, northern windowpane flounder, or ocean pout is allowed. Vessels fishing for winter flounder or windowpane flounder in multiple stock areas are subject to the most restrictive possession limit for the pertinent species. In other words, if a vessel fishes in the SNE winter flounder stock area and the GB winter flounder stock area on the same trip, the vessel will be subject to the prohibition on retention of winter flounder for that trip. Lastly, as explained further under Measure 6 under ''Approved Commercial Measures'' of the preamble (''Annual Specifications for U.S./Canada Management Area''), a limit of 5,000 lb (2,268 kg) of GB yellowtail flounder per trip is specified. Modifications to trip limits are implemented as a means to reduce fishing mortality or increase yield because they are a management tool that can target particular stocks and are an important component of the current FMP.

3. Specification of Target TACs

Target TACs are utilized in the FMP as one method of evaluating the success

of management measures and providing a way to make simple comparisons between different fishing years. Secondly, target TACs form the basis of calculating allocations of GB cod to sectors and the incidental catch TACs for the Special Management Programs. This final interim rule implements target TACs for FY 2009. The proposed rule indicated that the target TACs would be based upon either Fmsy or Frebuild for each stock. For stocks that were previously considered overfished, target TACs were proposed to be based upon Frebuild, with one exception for GB cod. For GB cod, the target TAC was proposed to be based upon Fmsy, for reasons specified in the proposed interim rule. In contrast, for stocks that have been newly classified as overfished based upon the results of GARM III, the target TACs were proposed to be based upon Fmsy. However, this final interim rule specifies target TACs based upon either the Ftarget for each stock (i.e., Fmsy or Frebuild) or the F resulting from measures implemented by this action (i.e., estimated F), whichever is higher. For stocks where the estimated F is lower than the Ftarget, implementing target TACs based upon the Ftarget allows for increased yield. For stocks where the estimated F is higher than the Ftarget, implementing target TACs based upon the estimated F more accurately reflects catch anticipated from measures implemented by this action. Table 3 lists the target TACs for FY 2009, based upon GARM III data, and an estimate of F for each stock during CY 2008.

TABLE 3—TARGET TACS (MT) FOR FY 2009

Species	Stock	Target TAC
Cod	GB	5,501
Cod	GOM	10,724
Haddock	GB	89,055
Haddock	GOM	1,564
Yellowtail flounder	GB	*1,617
Yellowtail flounder	SNE/MA	389
Yellowtail flounder	CC/GOM	860
Plaice		3,214
Witch flounder		1,129
Winter flounder	GB	2,004
Winter flounder	GOM	379
Winter flounder	SNE	0
Redfish		8,614
White hake		2,376
Pollock		6,346
Windowpane flounder	North	581
Windowpane flounder	South	279
Halibut		68

*A hard TAC, set through a separate process described in Measure 5 of this preamble.

4. Revisions to Incidental Catch TACs and Allocations to Special Management Programs

This final rule revises the specification of incidental catch TACs applicable to the Special Management Programs of the FMP for FY 2009, based upon the most recent scientific information. Incidental catch TACs are specified for certain stocks of concern for Special Management Programs in order to limit the amount of catch of stocks of concern that can be caught under such programs, and to fully account for fishing mortality. The incidental catch TACs apply to catch (landings and discards) caught under Category B DAS (either Regular or Reserve B DAS) on trips that end on a Category B DAS. The catch of stocks for which incidental catch TACs are specified on trips that start under a Category B DAS and then flip to a Category A DAS do not accrue toward such TACs.

A stock of concern is defined as a stock that is in an overfished condition or subject to overfishing. Due to the revised status of stocks (GARM III) that is adopted under this action, an incidental catch TAC is no longer appropriate for American plaice, because it is no longer considered a stock of concern. Further, new incidental catch TACs are required for GOM winter flounder and pollock because they are now considered stocks of concern. The percentages that the TACs are based on remain unchanged, with the exception of witch flounder, which is reduced from 5 percent to 2 percent, due to its overfished status and the fact that the F and total catch need to be reduced. The incidental catch TACs for GOM winter flounder are set at 5 percent, based on the rationale described in Framework (FW) 40A to the FMP: If the recent catch levels are less than the expected future catch levels, and 2009 management measures are likely to achieve more than the required reduction in F, then the size of an incidental catch TAC relative to the size of the overall TAC is larger (set as a larger percent). The incidental catch TAC for pollock is set at 5 percent because of the prevalence of pollock catch in the Special Management Programs, and based upon the rationale cited above. The utility of the Special Management Programs would be severely constrained if the incidental catch TAC is set too low. The number of total incidental catch TACs is increased from the current number (8), to 10. Due to the severe F reduction necessary for the SNE/MA stock of winter flounder, no retention of this stock is allowed, and there is no incidental catch TAC specified (see additional discussion under Section 9 of this preamble, Mitigating Measures). The calculation of incidental catch TACs by stock based on the target TACs is shown in Table 4.

TABLE 4—INCIDENTAL CATCH TACS FOR FY 2009 (MT)

Stock	Percentage of total TAC	Target TAC	Incidental TAC
GB cod	2	5,501	110
GOM cod	1	10,724	107.2
GB yellowtail	2	1,617	32.3
CC/GOM yellowtail	1	860	8.6
SNE/MA yellowtail	1	389	3.9
Pollock	5	6,346	317.3
Witch flounder	2	1,129	22.6
GB winter flounder	2	2,004	40.1
White hake	2	2,376	47.5
GOM winter	5	379	19.0

This final interim rule also modifies the allocation of the incidental catch TACs to the various Special Management Programs due to the changes in status of stocks, and to optimize the design of the programs based on the operation of the programs since their inception. For example, the Eastern U.S./Canada Haddock SAP was not used at all in FY 2007, and only two trips were taken in the area in FY 2006. Therefore, the percent allocations to this SAP are reduced for GB cod, GB yellowtail, and GB winter flounder, and the percent allocation to the Regular B DAS Program is increased due to higher participation in that program historically. Secondly, this rule provides the Regional Administrator the authority to modify the allocations among programs in-season, or prior to the beginning of the season, because it is difficult to estimate the appropriate TAC, since the level of participation and catch rates of stocks of concern in the various programs is highly variable. The changes to the allocations are summarized in Table 5. Table 6 contains the incidental catch TACs that result from applying the percentages in Table 5 to the incidental TACs in Table 4.

TABLE 5—MODIFICATIONS TO THE INCIDENTAL CATCH TAC ALLOCATIONS FOR FY 2009

Stock	Regular B DAS Program		Eastern U.S./Canada Haddock SAP		Closed Area I Hook Gear Haddock SAP	
	Current	New	Current	New	Current	New
GB Cod	50%	70%	34%	14%	16%	No change
GB Yellowtail flounder	50%	80%	50%	20%	.....	.....
GB Winter flounder	50%	80%	50%	20%	.....	.....
Pollock	None	90%	None	5%	None	5%
GOM Winter flounder	None	100%	.....	.....	.....	.....
GOM Cod	100%	100%	.....	.....	.....	.....
White hake	100%	100%	.....	.....	.....	.....
CC/GOM Yellowtail flounder	100%	100%	.....	.....	.....	.....
SNE/MA Yellowtail flounder	100%	100%	.....	.....	.....	.....
Witch flounder	100%	100%	.....	.....	.....	.....
Plaice	100%	None	.....	.....	.....	.....

TABLE 6—SPECIFICATION OF INCIDENTAL CATCH TACS FOR SPECIAL MANAGEMENT PROGRAMS (MT) FOR FY 2009

Stock	Regular B DAS Program	Eastern U.S./ Canada Haddock SAP	Closed Area I Hook Gear Haddock SAP
GB Cod	77	15.4	17.6
GOM Cod	107.2	na	na
GB Yellowtail flounder	25.8	6.5	na
CC/GOM Yellowtail flounder	8.6	na	na
SNE/MA Yellowtail flounder	3.9	na	na
Pollock	285.6	15.9	15.9
Witch flounder	22.6	na	na
GB Winter flounder	32.1	8.0	na
White hake	47.5	na	na
GOM Winter flounder	19.0	na	na

5. Annual Specifications for U.S./ Canada Management Area

In consultation with the Council, NMFS annually implements management measures for the U.S./ Canada Management Area through proposed and final rules. For FY 2009, because NMFS is implementing management measures for the entire fishery to reduce fishing mortality as described above, NMFS is including the specification of the TACs and other measures for the U.S./Canada Management Area in this final interim rule in order to streamline the regulatory process.

The FMP specifies a procedure for setting annual hard TAC levels (i.e., the fishery or area closes when a TAC is reached) for Eastern GB cod, Eastern GB haddock, and GB yellowtail flounder in the U.S./Canada Management Area, which is described in the proposed interim rule. The specific justification for the FY 2009 TACs, which were based upon the most recent stock assessments, is also described in the proposed rule. On October 8, 2008, the Council approved, consistent with the 2008 Guidance Document, the following U.S./TACs recommended by the Transboundary Management Guidance Committee: 527 mt of Eastern GB cod; 11,100 mt of Eastern GB haddock; and 1,617 mt of GB yellowtail flounder. The FY 2009 TACs for the U.S./Canada Management Area represent a decrease for cod and yellowtail flounder, and an increase for haddock compared to those specified for FY 2008 (Tables 7 and 8).

TABLE 7—FY 2009 U.S./CANADA TACS (MT) AND PERCENTAGE SHARES (IN PARENTHESES)

	GB Cod	GB Haddock	GB Yellowtail Flounder
Total Shared TAC	1,700	30,000	2,100
U.S. TAC	527 (31)	11,100 (37)	1,617 (77)

TABLE 7—FY 2009 U.S./CANADA TACS (MT) AND PERCENTAGE SHARES (IN PARENTHESES)—Continued

	GB Cod	GB Haddock	GB Yellowtail Flounder
Canada TAC	1,173 (69)	18,900 (63)	483 (23)

TABLE 8—FY 2008 U.S./CANADA TACS (MT) AND PERCENTAGE SHARES (IN PARENTHESES)

	GB Cod	GB Haddock	GB Yellowtail Flounder
Total Shared TAC	2,300	23,000	2,500
U.S. TAC	667 (29)	8,050 (35)	* 1,950 (78)
Canada TAC	1,633 (71)	14,950 (65)	550 (22)

* Adjusted downward to 1,868.7 mt due to overharvest of FY 2007 TAC.

The regulations for the Understanding, promulgated by the final rule implementing Amendment 13, state that any overages of the GB cod, haddock, or yellowtail flounder TACs that occur in a given fishing year will be subtracted from the respective TAC in the following fishing year.

Therefore, should an analysis of the catch of the shared stocks by U.S. vessels indicate that an over-harvest occurred during FY 2008, the pertinent TAC will be adjusted downward in order to be consistent with the FMP and Understanding. Although it is very unlikely, it is possible that a very large over-harvest could result in an adjusted TAC of zero. If an adjustment to one of the FY 2008 TACs of cod, haddock, or yellowtail flounder is necessary, the public will be notified through publication in the **Federal Register** and through a letter to permit holders.

NMFS is also implementing, through the authority granted to the Regional Administrator by the FMP, measures to optimize the harvest of the shared resources. The regulations under § 648.85(a)(3)(iv)(D) provide the Regional Administrator the authority to implement in-season adjustments to various measures in order to prevent over-harvesting, or to facilitate achieving the TAC.

Based on the Council's vote to postpone the opening of the Eastern U.S./Canada Area for vessels fishing with trawl gear in FY 2008 from May 1, 2008, to August 1, 2008, and the success of this management measure in slowing the annual catch rate of cod during the early part of the year, NMFS is implementing this same measure for FY 2009. Thus, the FY 2009 opening of the Eastern U.S./Canada Area for trawl vessels will be August 1, 2009; more selective longline gear is allowed access during May through July. Such vessels will be limited to a cod catch of 5 percent of the cod TAC, or 26.4 mt. The objective of this action is to prevent trawl fishing in the Eastern U.S./Canada Area during the time period when cod bycatch is likely to be very high. The goal of this measure is to prolong access to this area in order to maximize the catch of available cod, haddock, and yellowtail flounder.

Secondly, the Regional Administrator is implementing a possession limit of 5,000 lb (2,268 kg) per trip for GB yellowtail flounder. Although the regulations under § 648.86(a)(3)(iv)(C) indicate an initial trip limit of 10,000 lb (4,536 kg) at the beginning of a fishing year for GB yellowtail flounder, based on the yellowtail flounder catch rate from the U.S./Canada Management Area under a 5,000-lb (2,268-kg) trip limit during FY 2008, and analyses conducted by NMFS during FY 2007, a 5,000-lb (2,268-kg) trip limit is an appropriate trip limit to allow harvesting of the TAC, and to increase the likelihood that further restrictions during the fishing year to slow the catch rate will be unnecessary.

Third, the Regional Administrator is allowing the use of the Ruhle Trawl in the Eastern U.S./Canada Area. Under permanent regulations, only a flounder net and the haddock separator trawl are permanently authorized for such use. The Ruhle trawl, which is a modified trawl that substantially reduces the catch rate of most stocks of concern, was approved for use in the Regular B DAS Program and the Eastern U.S./Canada Haddock SAP (73 FR 40186, July 14, 2008). Approval of the use of the Ruhle trawl in the Eastern U.S./Canada Area through this interim rule will provide another alternative for trawl vessel operators and, therefore, provide additional flexibility. As detailed in the July 14, 2008 final rule, the Ruhle trawl has been demonstrated to substantially reduce catch of many species of groundfish, and therefore its use is consistent with the management objectives for the Eastern U.S./Canada Area.

Lastly, the Regional Administrator is implementing zero trips into the CA II Yellowtail Flounder SAP during FY 2009, based on a determination that the available TAC of GB yellowtail flounder is insufficient to support a minimum level of fishing activity within the CA II Yellowtail Flounder SAP. The Regional Administrator has the authority to determine the allocation of the total number of trips into the CA II Yellowtail Flounder SAP based upon several criteria, including GB yellowtail flounder TAC level and the amount of GB yellowtail flounder caught outside of the SAP. As implemented by FW 40B, zero trips to this SAP should be allocated if the available GB yellowtail flounder catch is not sufficient to support 150 trips with a 15,000-lb (6,804-kg) trip limit (i.e., if the available GB yellowtail flounder catch is less than 1,021 mt). This calculation takes into account the projected catch from the area outside of the SAP. Based on the estimate for catch outside of the SAP utilized for FY 2008 (1,376 mt), and the proposed GB yellowtail flounder TAC for FY 2009 (1,617 mt), there is insufficient available catch to allow the SAP to proceed (i.e., $1,617 - 1,376 = 241$; $241 < 1,021$ mt).

6. Haddock TAC for the CA I Hook Gear Haddock SAP

Under this action, a haddock TAC for the CA I Hook Gear Haddock SAP is set based upon the GARM III stock assessment and a formula implemented in FW 42. The haddock TAC in a particular year is based upon the TAC that was specified for the SAP in 2004 (1,130 mt), scaled according to the size of the exploitable biomass of western GB haddock compared to the biomass size in 2004 (35,317 mt). The size of the western component of the GB haddock stock is estimated at 35 percent of the size of the total GB haddock stock. Because the 2009 exploitable biomass of haddock is 321,870 mt, the formula and

resultant TAC is as follows: $((.35)(321{,}870)/35{,}317) \times 1{,}130 = 3{,}604.5$ mt. This action implements further modifications to this SAP, as discussed in Item 9 below.

7. Elimination of the SNE/MA Winter Flounder SAP

The SNE/MA Winter Flounder SAP regulations allow a limited access NE multispecies vessel fishing for summer flounder west of 72°30′ W. long. to retain up to 200 lb (91 kg) of winter flounder while not under a NE multispecies DAS, provided the vessel complies with various restrictions. Due to the severely depleted status of SNE/MA winter flounder, and the goal of reducing F to as close to zero as practicable, this final rule eliminates this SAP. Because the SAP could enable limited targeting of winter flounder, elimination of the SAP may prevent some catch of winter flounder from occurring.

8. Elimination of the State Waters Winter Flounder Exemption

The State Waters Winter Flounder Exemption allows vessels issued a NE multispecies permit to fish in state waters for winter flounder using gear with mesh smaller than required for other vessels in the fishery (provided various requirements and criteria are met). Due to the severely depleted status of the SNE/MA winter flounder stock, and the goal of reducing F to as close to zero as practicable, this final rule eliminates this SAP. Because the SAP could enable limited targeting of winter flounder, elimination of the SAP may prevent some catch of winter flounder from occurring.

9. Mitigating Measures

CA I Hook Gear Haddock SAP Expansion. For reasons explained in the Comments section below, this final rule implements modifications to the CA I Hook Gear Haddock SAP to expand its scope and change some of the restrictions in order to increase opportunity to access GB haddock and provide additional flexibility to vessels. The expansion has been determined to be consistent with the goals of the FMP. Specifically, this rule modifies the time period for the SAP from October through December, to May through January, and expands the area within CA I where vessels may fish to the east and south, to encompass the entire northern half of CA I. This rule eliminates the division of the SAP into two time periods, as well as the allocation of the haddock TAC to the two time periods. All limited access NE multispecies DAS vessels fishing with hook gear may fish in the SAP at any time (provided the SAP is open), regardless of whether the vessel is enrolled in a sector or is in the ''common pool.'' This final rule also implements a provision that was not included in the Council's alternative, which is a prohibition on the use of squid as bait when fishing in this SAP, in order to allow haddock to be targeted with increased likelihood that the catch rate of cod will be low. This prohibition is based upon analysis of experimental fishery data during the comment period for this action that indicated high bycatch of cod may occur when using squid as bait. This final rule also eliminates the requirement that vessels intending to participate in the SAP provide a yearly notification to the observer program in advance of the SAP season, because the removal of the sector and non-sector seasons for this SAP no longer make this notification necessary to assist in the deployment of observers. The requirement to notify the observer program 72 hr in advance of each trip is maintained. These measures were not included in the proposed rule and NMFS is soliciting comments on this aspect of the rule.

Reduction of Haddock Minimum Size. Under this interim action, the haddock minimum size is reduced to 18 inches (45 cm) for both the commercial and recreational fisheries in order to increase yield and decrease bycatch (as defined by the Magnuson-Stevens Act). Information from GARM III indicates that the GB stock is very large and is rebuilt, while the GOM stock is 99-percent rebuilt. Furthermore, a portion of the large 2003 year class of haddock is still below the current 19-inch (47.5-cm) minimum size. A reduced minimum size for haddock will allow vessels to retain more haddock, thereby increasing yield for this species. Other recreational measures are described under Measure 10 under ''Approved Commercial Measures'' of the preamble to this final interim rule.

Extension of the Eastern U.S./Canada Haddock SAP. The Eastern U.S./Canada Haddock SAP, which is set to expire at the end of FY 2008 on April 30, 2009, is extended through this interim action, in order to continue to facilitate access to GB haddock. This SAP allows vessels fishing with trawl gear to fish in a portion of the Eastern U.S./Canada Area, including a section of the northern portion of CA II (the ''triangle''), under a Regular B DAS or a Reserve B DAS. This SAP allows a vessel to utilize a Category B DAS and fish in the ''triangle,'' which is not otherwise accessible. The geographic area remains unchanged, and the rules that apply remain unchanged, with the exception of the reallocation of the incidental catch TACs (see Table 5).

When fishing in this SAP, vessels must fish with either a haddock separator trawl or a Ruhle Trawl, and are subject to restrictive possession limits in order to provide an incentive to correctly use the specialized trawl gear to help minimize bycatch of stocks of concern. Catch of stocks of concern on trips that end under a B DAS count toward the incidental catch TACs specified for pollock, GB cod, GB winter flounder, and GB yellowtail flounder (see Table 6). The total amount of these stocks of concern caught is limited by these incidental catch TACs and the program is typically subject to a higher level of observer coverage than the NE multispecies fishery at large. Furthermore, there are specialized rules that apply when fishing in this SAP, including those regarding observer notification, VMS declaration, reporting requirements, and a no discard provision.

Modifications to the Regular B DAS Program. The Regular B DAS Program was designed to provide opportunities to target healthy stocks without threatening stocks for which a mortality reduction is required. The program allows the use of Regular B DAS under restrictions designed to minimize impacts of stocks of concern. Under this interim rule, in addition to the modifications implemented under Measure 5 under ''Approved Commercial Measures'' of the preamble to this final interim rule (Revisions to Incidental Catch TACs and Allocations to Special Management Programs), several revisions are made to the Regular B DAS Program in order to address the current status of stocks and necessary reductions to F, as well as to maintain the usefulness of the Regular B DAS Program. Under current regulations, the Regional Administrator has the authority to close the Regular B DAS Program if it is projected that continuation of the Regular B DAS Program would undermine the achievement of the objectives of the FMP. In addition to monitoring the incidental TACs proposed under Section 5 of the preamble, NMFS will closely monitor the level of discarding of stocks that are proposed to have zero retention, but for which there is no incidental TAC (i.e., SNE/MA winter flounder, northern windowpane flounder, and ocean pout) to ensure that fishing mortality objectives for all stocks are not jeopardized.

In order to prevent the quarterly incidental catch TACs from limiting the usefulness of the program, any quarterly

incidental catch TAC that remains uncaught from quarters one, two, and/or three will roll over into the subsequent quarter.

Due to the number of flatfish stocks that need reductions in F, the use of low profile (tie-down) gillnets under this interim action are prohibited on trips fishing under the Regular B DAS Program. Within the NE multispecies fishery, flatfish are traditionally targeted by reducing the vertical height of bottom-set gillnets by tying the floatline of a gillnet to the leadline, or modifying the construction of the floatline to reduce or eliminate its buoyancy. Thus, because most stocks of concern are flatfish and targeting stocks of concern is not consistent with the goals of the Regular B DAS Program, the use of low profile gillnet gear is prohibited under this Program. The use of gillnet gear to catch haddock is still allowed.

Under current regulations, when 100 percent of the Incidental Catch TAC for white hake has been harvested, vessels fishing under a Regular B DAS are prohibited from retaining white hake. This is in contrast to the rules pertaining to the other Incidental Catch TACs in the Regular B DAS Program whereby, when the TAC is projected to be harvested, the use of Regular B DAS is prohibited in the pertinent stock area for the duration of the quarter. This final interim rule treats pollock and witch flounder in the same manner as white hake. Therefore, when 100 percent of the Incidental Catch TAC for white hake, pollock, or witch flounder is harvested, vessels fishing under a Regular B DAS will be prohibited from retaining white hake, pollock, or witch flounder, respectively. Because white hake, pollock, and witch flounder have stock areas that cover the GOM, GB, and SNE/MA areas, if the harvest of the TAC were to trigger a shutdown of the pertinent stock area, the entire Regular B DAS Program would be shut down. The Regional Administrator is provided the authority to modify the pertinent possession restriction, or implement other measures, including a partial closure for the Regular B DAS Program, in order to prevent excessive discarding of the stock.

DAS Leasing Program Modifications. Under this rule, the current prohibition on leasing DAS between sector and common pool vessels is eliminated in order to increase flexibility and efficiency in the DAS leasing market. Secondly, the limit on the maximum number of DAS that a vessel sector and common-pool vessel may lease is eliminated. Amendment 13 implemented a restriction that a lessee may lease Category A DAS in an amount up to the vessel's FY 2001 allocation (excluding carry-over DAS from the previous year, or additional DAS associated with obtaining a Large Mesh permit). This restriction is removed in order to increase flexibility and efficiency in the DAS leasing market. These mitigation measures, including the DAS Transfer Program modifications described below, will also enhance the likelihood of compliance with the measures by providing additional fishing opportunities.

DAS Transfer Program Modifications. Under this final rule, the DAS conservation tax is removed from the DAS Transfer Program. Specifically, the mandatory reduction of Category A and B DAS (20 percent), and Category C DAS (90 percent), will no longer apply when vessels participate in the DAS Transfer Program. The Council is expected to propose modifications to the DAS Transfer Program in Amendment 16 in order to provide an additional incentive to permanently transfer groundfish DAS, provide for parity of the DAS Transfer Program with the DAS Leasing Program, facilitate consolidation of permits, and provide flexibility for vessels to mitigate the negative impacts of DAS reductions and other management measures. NMFS is implementing this temporary modification to the program for the same reasons the Council is expected to propose such changes. The limited duration of the tax-free period (due to the limited duration of the proposed interim action) will limit the amount of any effect the change may have on increasing the overall DAS use rate.

Monkfish DAS Rules to Mitigate Impacts of Groundfish Interim Action. Because vessels with a limited access Monkfish Category C and D permit are required to concurrently use a groundfish DAS in most circumstances, the differential DAS requirements implemented by this final rule impact such vessels. Although vessels fishing under concurrent monkfish and groundfish DAS in a differential DAS area still utilize monkfish DAS at a 1:1 rate, the fact that their groundfish DAS are used at the rate of 2:1 indirectly limits the ability for such vessels to fish for monkfish in the future, because once a vessel runs out of groundfish DAS, their ability to fish under a monkfish-only DAS is limited. This final rule provides economic relief to groundfish vessels that also possess either a Category C or D monkfish permit by allowing these vessels to accrue a monkfish-only DAS while fishing for groundfish in a 2:1 differential DAS counting area.

For example, a limited access monkfish Category C or D vessel with 40 groundfish DAS and 31 monkfish DAS that fished under a monkfish DAS exclusively in a 2:1 differential DAS counting area for 20 days would use all of its 40 DAS groundfish allocation and, concurrently, 20 DAS of its monkfish allocation (because monkfish DAS are counted on a 1:1 basis in the differential DAS area). Thus, the vessel would have a remaining balance of 11 monkfish DAS, and zero groundfish DAS. Without a regulatory change that allows a vessel to accrue a monkfish-only DAS while fishing for groundfish in a 2:1 differential DAS area, once the vessel used up its groundfish DAS, the vessel would be unable to fish monkfish-only DAS and, in this example, the use of the 11 remaining monkfish DAS would have to be foregone. This action will restore the ability for the vessel to use its remaining 11 monkfish DAS, in this example, because the vessel would be eligible to receive up to a total of 20 monkfish-only DAS as a result of fishing in the 2:1 groundfish differential DAS area. Since the vessel in this example would only have 11 monkfish DAS left, its monkfish-only DAS would be capped at 11. This measure was not included in the proposed rule, and NMFS is soliciting comments on this provision.

10. Recreational Measures

This action reduces fishing mortality on the GOM cod, GB cod, and SNE winter flounder fisheries for private recreational vessels fishing in the EEZ and for federally permitted charter/party vessels, commensurate with the reduction proposed for the commercial fishery. The seasonal prohibition on the possession of GOM cod for both private recreational and charter/party vessels is extended from its current duration of November through March, to November through April 15, and a GB cod trip limit of 10 cod per person per day for charter/party vessels is implemented, consistent with the GB cod trip limit for private recreational vessels. Retention of winter flounder caught in the SNE/MA stock area is prohibited for both private recreational and charter/party vessels. Recreational vessels in possession of winter flounder caught outside of the SNE/MA winter flounder stock area may transit this area, provided all bait and hooks are removed from fishing rods, and any winter flounder on board has been gutted and stored. Lastly, as a mitigation measure as further described above, the minimum size for haddock caught by recreational vessels fishing in the EEZ and federally permitted charter/party vessels is reduced to 18 inches (45.7 cm).

11. Revised FY 2009 GB Cod TACs for Sectors

As highlighted above in Measure 3 under ''Approved Commercial Measures'' (''Specification of Target TACs''), this final interim rule revises several of the FY 2009 target TACs originally proposed for this action. Because the GB cod target TAC serves as the basis for calculating the GB cod TAC allocated to approved sectors, this final rule also revises the FY 2009 sector GB cod TAC allocations. Proposed rules specifying the 2009 GB cod TAC allocations for both the GB Cod Hook Sector and the GB Cod Fixed Gear Sector were published in the **Federal Register** on February 10, 2009 (74 FR 6564), and February 12, 2009 (74 FR 7029), respectively. These allocations were based upon an available U.S. share of the GB cod TAC of 3,506 mt, and the proposed interim rule listed the GB Cod Hook Gear Sector GB cod TAC as 284 mt (based upon an 8.09-percent share of the U.S. portion of the TAC), and the GB Cod Fixed Gear Sector GB cod TAC as 408 mt (based upon an 11.64-percent share of the U.S. portion of the TAC). Because this final interim rule revises the overall target TAC for GB cod from 3,506 mt to 4,328 mt, the GB cod allocations to these sectors are increased to 350.1 mt for the GB Cod Hook Sector and 503.8 mt for the GB Cod Fixed Gear Sector.

12. Extension of the Deadline for Gillnet Designation

The current regulations at § 648.4(c)(2)(iii)(A) require vessels fishing with gillnet gear to make an annual designation as either a Day or Trip gillnet vessel when the vessel is issued or renews a limited access NE multispecies permit. Once a vessel has elected this designation, the vessel may not change its declaration for the remainder of the fishing year. As further explained in Measure 1 under ''Approved Commercial Measures,'' this designation dictates the manner in which DAS are counted for such vessels. Because these final interim measures will affect how DAS are counted during FY 2009, and because such measures were not known to the public until after many vessels had already selected a gillnet designation for FY 2009, this final interim rule allows a vessel owner to change the gillnet designation associated with his/her permit through June 12, 2009. This provides additional time for the vessel owner to review the final interim measures and revise the gillnet designation for his/her permit, if necessary.

Comments and Responses

Eighty-eight comments were received during the comment period on the proposed interim rule and accompanying EA, from 63 individuals, 11 commercial fishing organizations, 2 state senators, 8 U.S. Senators, 9 U.S. Congressmen, 2 state resource management agencies (Massachusetts Division of Marine Fisheries (DMF) and the Maine Department of Marine Resources (DMR)), 2 conservation organizations, 2 municipalities (New Bedford, MA, and East Hampton, NY), and the Council.

Legal Authority for Interim Action

Comment 1: Four members of the commercial fishing industry, two organizations representing the commercial fishing industry (Northeast Seafood Coalition and Westend Fisherman's Association), an environmental organization (The Pew Environmental Group), and seven U.S. Senators stated that there is no legal requirement for interim measures to reduce fishing effort to the extent that the interim rule proposes to do.

Response: Section 305(c) of the Magnuson-Stevens Act authorizes the Secretary to implement interim measures to reduce or address overfishing if he/she finds that overfishing exists, as more fully explained elsewhere in this preamble. Guidelines to help clarify this authority (63 FR 24212; May 1, 1998) allow discretion and flexibility with respect to the scope and severity of the action. When proposing the interim measures, NMFS considered recent stock status and the need for substantial reductions in F to help ensure that overfished stocks remain on their Amendment 13 rebuilding trajectories. However, after review of public comments, NMFS has modified the management measures implemented under this final interim rule from those that were proposed, to target stocks in most immediate need of reductions; e.g., SNE winter flounder, and northern windowpane flounder; to reduce negative impacts on fishermen to the extent practicable in the context of this interim rule, without jeopardizing the likelihood of meeting rebuilding objectives of overfished multispecies stocks. Because NMFS is not implementing the proposed expanded differential DAS accounting in the GOM and northern portions of GB, and because this final interim rule replaces the SNE Closure Area with differential DAS counting, this final interim rule will result in smaller F reductions for several of the stocks than the proposed measures would have, and will not provide as much assurance that rebuilding goals will be met for overfished stocks. However, these final interim measures should not impede progress of attaining FMP rebuilding objectives, provided adequate adjustments, if necessary, are made by the Council in future years. This is due, in part, to the fact that several overfished stocks have extended rebuilding periods (GB cod—2026, Atlantic halibut—2058, and CC/GOM yellowtail flounder—2023), which allows more time for the stocks to respond to management. In addition, the Council has adopted draft rebuilding programs in Amendment 16 for stocks recently classified as overfished (pollock, witch flounder, GB winter flounder, and northern windowpane flounder) that will likely set a rebuilding end-date as 2017 for these stocks. The measures implemented by this final interim rule do achieve substantial reductions in F for the targeted stocks, including a 62-percent reduction for SNE/MA winter flounder and a 39-percent reduction for SNE/MA yellowtail flounder.

Goal of Interim Action and Magnitude of Management Measures

Comment 2: Fifty-seven commenters, including commercial fishermen, commercial fishing organizations, municipalities, state fisheries organizations, and state senators questioned why such severe interim restrictions are necessary. Twenty commenters questioned NMFS's justification and compliance with the Magnuson-Stevens Act, particularly National Standard (NS) 8. Many characterized the proposed interim rule as failing to balance the need to reduce overfishing and rebuild stocks with the need to maintain a viable fishery and infrastructure. Some claimed that NMFS is ignoring the provisions of the Magnuson-Stevens Act that provide flexibility to achieve an appropriate balance. Others asked what stocks have collapsed to warrant such extreme measures.

Response: Based upon the best available science (GARM III), NMFS believes substantial reductions in F are necessary for stocks in most need of protection in order to ensure that rebuilding objectives are not jeopardized. When determining final management measures for this rule, NMFS considered the requirements of the Magnuson-Stevens Act, including the minimization of adverse economic impacts, the status of stocks, and the requirements of the FMP. As stated in the proposed interim rule, NMFS's goal for this interim action is to implement

measures to reduce overfishing, while addressing the need to help sustain fishing communities, without compromising rebuilding objectives and statutory rebuilding timelines. Relying on the additional flexibility inherent in implementing an interim rule under section 305(c) of the Magnuson-Stevens Act, as more fully explained elsewhere in this preamble, NMFS balanced the need to reduce overfishing and rebuild stocks with the need to minimize adverse impacts on fishing industry businesses and sustain fishing communities. However, based on public comments that the proposed management measures would create severe economic hardship, and further analysis of the impacts of several additional alternative combinations of management measures, NMFS is not implementing the proposed interim measures of 2:1 differential DAS counting in the GOM and northern GB area as this measure was primarily intended to reduce F on pollock and witch flounder. Given that there is no current rebuilding program for pollock, witch flounder, or northern windowpane flounder, and that the Amendment 16 rebuilding programs likely to be proposed for these stocks have a rebuilding timeline of 2017, NMFS believes that there is additional time for the Council to ensure that these, and other newly overfished stocks, are rebuilt as intended under Amendment 16. Further, given concern raised by the public regarding the severe economic impacts that would be imposed by the SNE Closure Area, NMFS is not implementing that proposed measure, but is instead implementing a modified 2:1 differential DAS counting area, with a zero landing limit for SNE winter flounder, to discourage effort on this stock. As stated in response to Comment 1 above, NMFS believes that, despite these revisions, the FMP rebuilding goals are still achievable, although additional restrictions may likely be necessary in the future to achieve the goals.

This action includes several measures intended to minimize the adverse economic impacts associated with effort reduction measures. These include a reduction in the haddock minimum size restriction, revisions to the DAS Leasing Program, elimination of the conservation tax in the DAS Transfer Program, continuation of the Eastern U.S./Canada Haddock SAP, modifications to the Regular B DAS Program, and expansion of the CA I Hook Gear Haddock SAP. As described in the EA associated with this action, these measures should provide additional flexibility and fishing opportunity for vessels that would otherwise not be available.

In summary, in response in public comments, NMFS, within the limits associated with implementing an interim rule under section 305(c) of the Magnuson-Stevens Act, has made several changes from the proposed rule to mitigate negative economic impacts and address industry concerns regarding disproportionate impacts of particular measures, consistent with NS 8. As described in more detail under the description of management measures above, the principal changes from the proposed rule are as follows: (1) Replacement of the SNE Closure Area with 2:1 differential counting in this area; (2) expansion in time and area of the CA I SAP; (3) modification of the rules regarding monkfish DAS to mitigate unintended impacts of the existing GOM Differential DAS Area and the Interim SNE Differential DAS Area; and (4) modification of how vessels are charged DAS when fishing inside and outside of a differential DAS area on the same trip, i.e., vessels will be charged DAS based on the area that they are fishing in.

Comment 3: One commenter asked how NMFS can reconcile the magnitude of the impacts of this rule, based on the status of the stocks, with its October 2007 determination that there was not a fishery resource disaster.

Response: In 2007, Massachusetts, New Hampshire, and Maine requested that NMFS make a determination that there was a fishery resource disaster affecting them. NMFS denied those requests because the statutory requirements for such a finding were not met. Although the most recent stock assessments indicate that many groundfish stocks are overfished, several important stocks have recovered, or are close to recovery. The fact that substantial reductions in F are still necessary to rebuild stocks and eliminate overfishing is not inconsistent with the 2007 denial of the requests for a fishery resource disaster declaration. NMFS's response to the Commonwealth of Massachusetts included the following: ''The National Oceanic and Atmospheric Administration's National Marine Fisheries Service (NMFS) has carefully analyzed the data regarding the Massachusetts groundfish fishery and also the provisions regarding a commercial fishery failure due to a fishery resource disaster under Magnuson-Stevens Act sections 312(a) and 315. Although we understand that there has been economic difficulty in the groundfish-dependent communities of Massachusetts and we are very sympathetic, we find that your request for a determination of a commercial fishery failure due to a fishery resource disaster does not meet the requirements for such a finding under Sections 312 or 315 of the Magnuson-Stevens Act. Our latest research shows encouraging increases in most of the groundfish stocks including cod, haddock, and Georges Bank yellowtail. Even though fishing revenues show some declines, the commercial fishery itself, although diminished, has not failed.''

Evaluation of the Council Proposal for FY 2009

Comment 4: Twenty-one commenters, including eight U.S. Senators and nine U.S. Congressmen, supported adoption of the Council's recommended interim measures. Some commenters questioned why NMFS disregarded the Council's proposal, noting their belief that the Council proposal is better for fishermen and the fish, and stating that the Council proposal would itself cause economic harm. Many commenters believed that the Council's proposal represents a better bridge to Amendment 16. Several commenters claimed that input controls such as DAS have failed to prevent overfishing and have increased discarding and foregone yield, with some supporting the TAC-payback provision of the Council's proposal, in particular. Three commenters suggested that NMFS implement a requirement for all groundfish vessels to submit daily catch reports through VMS as a means to improve reporting and move toward an output control management system.

Response: As explained in the response to Comment 2 above, NMFS's goal for the interim action is to reduce F on the groundfish stocks while minimizing economic impacts to the extent practicable, without jeopardizing rebuilding objectives. NMFS carefully considered the Council's recommended alternative, but ultimately rejected it for several reasons, the principal reason being that it would not have reduced F sufficiently to meet NMFS's goals for 7 of 12 stocks. As part of the EA, NMFS analyzed the no action alternative as a proxy for the Council's alternative using the closed area model (CAM). The results indicated that F reductions achieved by the Council's alternative would be insufficient for a number of stocks (7 of the 12 stocks requiring F reductions). Subsequent to the publication of the proposed interim rule, NMFS analyzed the Council's alternative and the results were essentially the same as the results of the analysis of the no action alternative.

After the end of the comment period, NMFS conducted additional analyses comparing the Council's proposed interim alternative, NMFS's proposed measures, and other alternatives. Based on those analyses, the loss of yield over time is greater for the measures recommended by the Council than for either the measures originally proposed by NMFS or those implemented by this final interim rule. Accordingly, the measures implemented by this interim action will preserve more TAC for more stocks in future years than those recommended by the Council. This aspect is important in the context of measures included in draft Amendment 16, as those measures rely heavily upon TACs to control the fishery in the form of sector allocations or annual catch limits and the associated accountability measures. Finally, deductions of TAC overharvests in the subsequent fishing year, as specified in the Council's proposal, are outside the possible scope of this interim action (or any subsequent interim action during FY 2009), because the effectiveness of interim actions is limited to a maximum of 366 days.

NMFS believes that an interim rule is not the appropriate means to transition toward a new management structure, or to implement novel management tools; it is intended to address short-term needs to end or reduce overfishing while the Council is developing longer-term measures for the fishery. NMFS cannot effectively implement new measures (such as an expanded VMS reporting requirement or sector management) to transition toward a new management system that has not yet been decided upon, nor can it build the foundation for a program that has not yet been selected by the Council. Although the Council has stated its intent to move toward an output-based management system, and NMFS is supportive of this goal, the current FMP controls fishing effort principally through DAS, in conjunction with trip limits and closures, and the Council will need to make transitions to different approaches through future amendments to the FMP.

Scientific Basis of Interim Action

Comment 5: Five commenters expressed concern about the quality of the data and underlying science and stock assessments used to develop the proposed interim rule. Specific comments related to the level of uncertainty due to the ''retrospective patterns'' associated with some stock assessments, and the stock size estimate for SNE/MA winter flounder.

Response: The scientific data upon which this interim action is based are the most recent stock assessments, referred to as GARM III, which were conducted from November 2007 through August 2008. GARM III was a regional, scientific peer review process for the purpose of providing benchmark assessments for the 19 groundfish stocks managed under the FMP. The assessments included extensive peer review from independent scientists. Of the 14 groundfish stocks assessed in GARM III based on an analytical assessment model, 7 stocks exhibited retrospective patterns that were considered severe enough that an adjustment to the population numbers and fishing mortality in 2007 was deemed necessary before determining current stock status and generating stock projections. The largest retrospective patterns were observed in GB yellowtail flounder, GOM winter flounder, and SNE/MA winter flounder. NMFS agrees that further work on the nature and causes of retrospective patterns is required. Notwithstanding the concerns regarding retrospective patterns, GARM III represents the best available science, and its use is consistent with NS 2. This was confirmed in a February 17, 2009 Department of Commerce Inspector General's report.

Support for Proposed Measures for Interim Action

Comment 6: One commenter from an environmental organization (The Ocean Conservancy) supported the proposed interim rule and stated that it is consistent with the current management regime, comprehensive, and simple. The commenter noted that the measures fall short of preventing overfishing in some cases, advocated hard TAC backstops for stocks of concern to increase accountability, and suggested that the goal should be Frebuild for stocks that were newly declared overfished. The commenter also recommended that NMFS should take strong action in 2009, otherwise the measures necessary to rebuild stocks after allowing another year of overfishing will make the procedural and administrative changes outlined in draft Amendment 16 much harder to successfully implement. One member of the public believed that NMFS should reduce fishing effort more than proposed.

Response: NMFS agrees with the commenter that strong action is necessary for 2009, but disagrees that the goal for newly declared stocks should be Frebuild and that hard TAC backstops are appropriate for an interim action. Although NMFS set a goal of Fmsy in the proposed interim action for stocks recently declared overfished (witch flounder, GB winter flounder, northern windowpane flounder, and pollock), the interim action provisions of the Magnuson-Stevens Act (section 305(c)) do not specifically require that an interim action end overfishing, but rather only reduce or address overfishing as more fully described elsewhere in this preamble. Despite that management measures in this final interim rule have been relaxed from what the proposed interim rule measures would have implemented, NMFS believes that the FMP rebuilding goals are still achievable, although additional restrictions in Amendment 16 or other actions will likely be necessary to achieve such goals.

NMFS analyzed a hard-TAC alternative, but rejected the alternative because: (1) It is likely that the TACs for at least two stocks (GB cod and pollock) would have resulted in fishery closures relatively early in each trimester; and (2) the complexity of a hard TAC management system and the associated cost and difficulties in its implementation to both the fishing industry and NMFS would make it impractical, if not impossible, to successfully and effectively implement in the short period of an interim action; and it would possibly be inconsistent with Magnuson-Stevens Act national standards and required provisions, because of disproportionate impacts on the fishing industry that could result from such a temporary, short-term action.

Safety Concerns

Comment 7: Four commenters, including nine U.S. Congressmen, and seven U.S. Senators, were concerned that the proposed interim rule did not adequately consider safety issues for small and mid-sized vessels. Specifically, they believed that the proposed differential DAS area in the GOM and GB, and the SNE Closure Area would create an incentive for vessels to steam to offshore fishing grounds or farther from their ports of departure and therefore be fishing in a less safe manner than if they were fishing closer to shore or their home port.

Response: As explained elsewhere in this preamble, based on public comment, this action does not implement the proposed expansion of the differential DAS counting in the GOM and GB, or the SNE Closure Area, and, therefore, largely addresses any safety issues associated with these two measures that the public may have been concerned about. Although NMFS is implementing 2:1 counting largely in the same area as the proposed SNE Closure Area (referred to in the rule as the ''Interim SNE Differential DAS

Area''), this revision would not pose any additional safety concerns beyond those already associated with the status quo GOM Differential DAS Area. NMFS agrees that differential DAS areas are among the many factors that confront a vessel operator in trying to achieve a profitable fishing trip in a safe manner. However, modifications to the DAS Leasing and Transfer Programs implemented by this interim action may provide additional DAS necessary for vessels to fish within the differential DAS areas and remain closer to shore, reducing safety concerns associated with measures implemented by this action. Finally, because the Interim SNE Differential DAS Area abuts the coastline, similar to the status quo GOM Differential DAS Area, vessels that declare into this area will be required to burn 2 DAS for every 1 day fished, regardless of where they fish on that trip. This is consistent with the provisions of the GOM Differential DAS Area and is based upon the same rationale offered by the Council when the GOM Differential DAS Area was adopted under FW 42.

Mixed-Stock Exception

Comment 8: Four comments were received, including one from nine U.S. Congressmen, that suggested that NMFS should consider the mixed-stock exception in the NS 1 guidelines to prevent the depleted condition of one stock from influencing the management measures developed for other stocks, resulting in management measures that are overly restrictive and reduce yield.

Response: NMFS agrees that, under the current FMP, the depleted condition of some stocks result in management measures that impact non-depleted stocks due to the commingled nature of the fishery and the management tools used, particularly DAS. However, NMFS disagrees that reliance on the mixed-stock exception can provide relief in the current situation, due to the number and nature of the particular stocks that are driving the management measures, and the constraints and conditions on the use of the mixed-stock exception in NS 1. The mixed-stock exception provides a very limited exception, with strict criteria, for ending overfishing of certain stocks, but not for rebuilding requirements and statutory time requirements. In fact, the new NS 1 Guidelines do not allow the mixed-stock exception to be used for overfished stocks. The Magnuson-Stevens Act mandates rebuilding of overfished stocks in most cases within 10 years. FY 2009 marks the midpoint of most of the rebuilding plans implemented under Amendment 13. Data from GARM III indicate that many of the 13 overfished stocks are substantially below biomass levels that can produce MSY such that substantial reductions in F are necessary to rebuild these stocks by the end of the rebuilding periods (*i.e.*, by 2014 for most stocks). Accordingly, these stocks are not eligible for the mixed-stock exception and, even if they were, continuing to subject such stocks to high levels of fishing effort would decrease the probability that these stocks will rebuild within the mandated timelines without substantial F reductions within the next few years.

Based on GARM III, the only stocks that are subject to overfishing, and not overfished, are GOM cod and the southern stock of windowpane flounder. Evaluation of whether these stocks would meet the threshold criterion for allowing overfishing does not make sense in this circumstance, because both stocks require relatively small F reductions (21 percent), compared with most of the other stocks. The current status of GOM cod and southern windowpane flounder is not causing a situation where management measures designed for these stocks are resulting in excessively restrictive measures on other stocks. Nevertheless, this interim rule will allow overfishing to continue for the duration of this interim action on GB cod, witch flounder, pollock, and northern windowpane flounder under authority found in section 305(c) of the Magnuson-Stevens Act, as is more fully explained elsewhere in this preamble. Thus, by allowing overfishing on these stocks, this final interim rule results in the same type of mitigation of negative impacts as would result if the mixed-stock exception were evoked.

SNE Closure Area

Comment 9: Twenty-eight commenters supported the proposed SNE Closure Area, including three members of the public and four commercial fishermen. Although several commenters believed the proposed closure was a proactive measure, most stated that such a restriction was long overdue, and necessary to rebuild the SNE/MA stock of winter flounder. One commenter believed that the area between Nantucket and CA I is particularly important to protect. Commenters noted the importance of winter flounder to the ecosystem and observed that the SNE winter flounder stock used to support a vibrant fishery and was a source of employment for fishing communities. One commenter noted that a closure area would provide the best chance of recovery for the stock. Another commenter strongly supported the provision that would allow hook vessels to fish in the closure area due to the selectivity of the gear, and noted that the closure area does not exclude fishermen, but only certain gear types. Five commenters who did not support the proposed SNE Closure Area suggested restrictions on the number or type of gillnets fished and the required use of specialized trawl gears in order to reduce catch of winter flounder. Some commenters expressed concerns such as an effort shift to targeting lobsters, and others acknowledged the economic hardship such a closure would cause. Suggestions for modification of the closure area included reducing the overall size and/or allowing more access, such as allowing groundfish vessels to use roundfish gillnets or tended roundfish gillnets (provided that winter flounder are not retained).

Response: NMFS agrees that the proposed SNE Closure Area would have afforded protection for winter flounder and served as an important factor in rebuilding the SNE/MA stock of winter flounder. Although the use of specialized gears may be effective in reducing the catch of flatfish, including winter flounder, a requirement for the use of specialized gear for an interim action (or limited duration) is not practical due to the cost of purchasing such gear and possible lack of availability. Further, this final action would implement a differential DAS area instead of a closure, and does not exclude gillnet or trawl gear. However, as explained in the response to Comment 10, below, NMFS is instead implementing an expanded differential DAS area in SNE to mitigate the economic impacts of the interim action without unnecessarily compromising efforts to rebuild overfished stocks. All commercial and recreational vessels fishing in the Interim SNE Differential DAS Area will be subject to a zero landing limit on SNE winter flounder to strictly control F for this stock.

Comment 10: Thirty-two commenters, including commercial fishing organizations, state fishery management organizations, and elected officials, did not support the proposed SNE Closure Area. The principal concern of 14 commenters was the anticipated economic impacts. Three commenters noted that the closure area is important fishing grounds for 16 vessels, and predicted a loss of 30 percent of income for fishermen, with a severe impact on the ports of Point Pleasant and Belford, NJ, where the majority of groundfish are landed in NJ. Several commenters noted that winter flounder is the only available groundfish off NJ, and stated that it is an important component of the

mix of species targeted. Their concern was heightened by the potential for cumulative negative impacts of the recent regulatory changes in other fisheries such as the Atlantic scallop fishery on such vessels. Two commenters expressed concern regarding the potential negative economic impact on the port of New Bedford, due to its reliance on winter flounder. Two commenters noted that there may be disproportionate impact on small, groundfish-dependent vessels with home ports near the proposed SNE Closure Area that are too small, or lack adequate manpower to transit long distances and fish in areas outside of the closure.

Response: Based on its economic analysis, NMFS agrees that groundfish-dependent vessels would be more severely impacted by the proposed interim measures than vessels that rely on groundfish for a lower percentage of their income, and that vessels that would have fished for groundfish in the area of the proposed SNE Closure Area would be substantially impacted if they fish with gillnets or trawl gear. For those vessels that would have been most impacted by the proposed interim rule, medium and large boats would be slightly more impacted than small vessels; but, in general, the analysis indicated that the impacts among small, medium, and large vessels would be similar. In order to mitigate impacts on vessels that fish in this geographic area, but still provide a substantial reduction in fishing mortality for SNE/MA winter flounder and other stocks in this area consistent with rebuilding objectives, NMFS is implementing 2:1 differential DAS counting instead of the proposed closure. In addition to differential DAS counting, all vessels will be prohibited from retaining winter flounder throughout the SNE winter flounder stock area. Vessels fishing with hook gear will not be charged DAS at the differential rate due to the low catch rates of winter flounder by hook gear.

Although this change from the proposed rule will not allow vessels to target or land winter flounder in this area, there is the potential for vessels to land other species, such as haddock, pollock, and cod. This would allow for at least some groundfish landings from all gears fishing in this area and reduce the economic impacts of the interim measures compared to those anticipated from the proposed measures. In addition, this change is likely to reduce the potential for effort shifts into other geographic areas or other fisheries by maintaining a smaller directed fishery within SNE. The estimated reduction in F resulting from this change will be closer to the objectives of this action and reduce the amount of lost yield for several stocks, particularly GB haddock, SNE/MA yellowtail flounder, American plaice, and white hake.

Comment 11: Seven commenters, including DMR, the Monkfish Defense Fund, and the Garden State Seafood Association, expressed concern about potential harmful impacts that the proposed SNE Closure Area would have on vessels with limited access Monkfish Category C and D permits (those with both a limited access monkfish and a NE multispecies permit). The commenters stated that there is a robust monkfish fishery in the area, and asserted that the large mesh (10–12 inch (25–30 cm, respectively)) gear used does not catch winter flounder or yellowtail flounder in meaningful quantities. Further, some asserted that the impact on such vessels would be unfair because Category A and B vessels would still be allowed to fish in the area. One commenter was concerned about the proposed exemptions, which would allow other non-groundfish fisheries to occur in the proposed closure area.

Response: NMFS agrees that, as proposed, the SNE Closure Area would have negatively impacted vessels with a limited access Monkfish Category C or D permit, because, under current groundfish rules, such vessels may not fish in the SNE Monkfish and Skate Gillnet Exemption Area (which overlapped the proposed SNE Closure Area) unless they are fishing under a ''monkfish only'' DAS. Because this final rule does not implement the proposed SNE Closure Area, NMFS believes that negative impact on monkfish Category C and D vessels is greatly reduced. To avoid further negative impact on the monkfish fishery that could occur because Monkfish Category C and D vessels will use groundfish DAS at a higher rate in the differential DAS counting areas (both in the GOM and SNE), this final rule allows vessels to fish their additional monkfish DAS as ''monkfish only'' DAS. As explained in detail in Measure 9 under ''Approved Commercial Measures'' of the preamble to this rule (''Mitigating Measures''), Monkfish Category C and D vessels fishing in either the GOM Differential DAS Area or the Interim SNE Differential DAS Area will accrue a monkfish-only DAS at the rate of one monkfish DAS for every two groundfish DAS used in the differential areas.

The regulatory exemptions enable non-groundfish fisheries to continue to fish in the proposed closure area to continue, due to the nature of the exemptions and the restrictions associated with the exemptions. Exempted fisheries are required to maintain an incidental catch of regulated species that is less than or equal to 5 percent of the weight of fish on board and must not jeopardize groundfish fishing mortality objectives. Further, the exemptions and exempted fisheries have strict limitations that minimize the potential for adversely impacting groundfish, including gear, area, and seasonal restrictions designed to decrease interaction with groundfish stocks. Because the closure area has been revised to a differential DAS counting area, the concern about allowing exempted fishery participants into the SNE Closure Area while groundfish vessels fishing with certain gears are excluded should be addressed.

Comment 12: Five commenters were concerned that the proposed SNE Differential DAS Area would be ineffective at achieving its objective of reducing fishing mortality on winter flounder, and instead suggested DAS or trip limits as a better means of controlling fishing effort. Some commenters believed that overfishing is not responsible for the depleted status of winter flounder, but instead attributed the low stock size to habitat loss; or predation by striped bass, spiny dogfish, or gray seals.

Response: NMFS acknowledges that the proposed SNE Closure Area would not have completely eliminated F on winter flounder, because the potential for unavoidable bycatch of winter flounder from other fisheries, although limited, would result in some level of fishing mortality on this stock. Both DAS and trip limits have advantages and disadvantages as management tools. DAS restrictions such as differential DAS counting will allow more fishing opportunity in the area than a closure, but, depending upon a vessel's DAS allocation and its ability to lease DAS, such measures may not cause a particular vessel to reduce its fishing effort in the geographic area proposed for the 2:1 DAS counting. Overall, however, such measures do reduce fishing effort and are effective at reducing F on stocks predominantly caught in a particular area. Trip limits can be effective at limiting a vessel's catch of a particular species, and may influence fishing behavior, but can cause regulatory discarding or high-grading. As explained in the response to Comment 10, NMFS modified the measures of this interim rule from those originally proposed. This final rule implements a differential DAS counting area in SNE in order to reduce F on SNE/MA winter flounder and other stocks in the area that also require

reductions in F. In addition, this rule implements a zero retention limit for SNE/MA winter flounder to further reduce F on this stock. Thus, in conjunction with the overall DAS reduction, NMFS has relied upon DAS and trip limits to reduce F on SNE winter flounder to the extent possible, short of the proposed closure area. Although this measure does not reduce fishing mortality on SNE/MA winter flounder to a level necessary for rebuilding (which is an F of zero), it does end overfishing on this stock. Further restrictions may be needed in Amendment 16 to reduce F in this stock to a level consistent with rebuilding objectives.

With respect to whether there are other factors responsible for the depleted status of the stock, the major non-fishing impact that has been identified and documented is a correlation between warmer winter/early spring water temperatures and increased predation on winter flounder larvae by Crangon shrimp and some other planktonic predators. These factors may have negatively impacted recruitment levels since the early 1990s. Notwithstanding environmental factors, fishing mortality has been, and remains at a level that is not sustainable, and not compatible with stock rebuilding. Thus, further reductions in fishing effort are necessary to rebuild this stock, as required by the Magnuson-Stevens Act.

Interim Differential DAS Area

Comment 13: Five comments, including one from a commercial fishery organization (Associated Fisheries of Maine), suggested that the DAS reduction proposed by the interim rule, including that from the Interim Differential DAS Area, is too drastic and that the Interim Differential DAS Area is larger than necessary to achieve the target fishing mortality reductions, resulting in loss of optimum yield (OY) in the fishery. One respondent indicated that, because the proposed Interim Differential DAS Area is so large, there would be no incentive for vessels to fish outside of the area, resulting in increased F on species within the area such as GOM cod.

Response: Because many of the stocks managed by the FMP co-occur, and much of the fishing gear used to harvest groundfish stocks is limited in its ability to selectively target particular stocks, it is very difficult to design management measures that precisely achieve different conservation objectives for every stock. Management measures designed to achieve a particular F reduction for one stock will likely achieve larger than necessary reductions in F for other stocks. DAS, one of the principal tools of the FMP controlling fishing effort in the fishery, is a difficult and often blunt tool with which to target F reductions on specific stocks.

As explained elsewhere in this preamble, including in the response to Comments 2 and 10, NMFS is not implementing the proposed interim measures of an expanded differential DAS area in the GOM and northern portions of GB based upon public comment and additional analysis. Although the revised measures implemented by this final interim rule do not achieve the target F reductions for all stocks, these measures achieve substantial F reductions for all stocks, particularly those that are severely overfished, including SNE/MA winter flounder and SNE/MA yellowtail flounder. In addition, according to the analysis conducted to support this action, the measures implemented by this final interim rule are expected to result in more yield of all stocks than the measures included in the proposed interim rule. Finally, this analysis suggests that measures implemented by this final interim rule are not likely to result in additional shifts in effort and will not increase F on stocks such as GOM cod.

Comment 14: Ten comments, including those from two commercial fishery organizations (Northeast Seafood Coalition and Associated Fisheries of Maine), suggested that fishing effort will shift inshore because the size of the proposed Interim Differential DAS Area, which includes all of the GOM and northern portions of GB, limits the areas not subject to differential DAS counting. Four commenters indicated that this would increase fishing pressure on GOM cod, CC/GOM yellowtail flounder, and winter flounder stocks, as well as discards of other stocks, possibly resulting in more onerous regulations for FY 2010. One individual recommended that no changes should be made to existing differential DAS areas and believed that shifting effort inshore as part of the interim action would result in reduced yield of offshore stocks.

Response: As noted above in the discussion of Comment 13, this final interim rule does not implement the proposed Interim Differential DAS Area, but rather maintains the existing GOM Differential DAS Area and an expanded differential DAS area in SNE. Analysis of these measures utilized the CAM, which estimates shifts in fishing effort to maximize vessel profit in response to management measures. This analysis indicates that the measures implemented by this final interim rule would not increase F on inshore stocks, but would continue to decrease F on GOM cod, CC/GOM yellowtail flounder, and GOM winter flounder. By maintaining the existing GOM Differential DAS Area closer to shore, yield of offshore stocks will not likely be reduced by this interim action.

NMFS acknowledges that more onerous restrictions may be necessary in FY 2010 and beyond to ensure that stocks rebuild within established rebuilding timeframes. However, even though the revised measures implemented by this final interim rule are less restrictive than those originally proposed and may not achieve Frebuild or Fmsy for all stocks, such measures continue to reduce F on all stocks and would help continue to rebuild overfished stocks.

Comment 15: One individual recommended that the interim action should be revised to only charge DAS at a rate of 2:1 for the time spent within the Interim Differential DAS Area, suggesting that VMS has the capacity to support such a measure, as reflected in the measures for the SNE Differential DAS Area implemented under FW 42.

Response: NMFS acknowledges that VMS has the capacity to identify the time a vessel spends in particular areas and could implement the recommendations made by the commenter. However, NMFS is concerned that failing to charge DAS at a rate of 2:1 for the entire trip, regardless of area fished, would undermine the effectiveness of this measure by allowing vessels to fish for short durations within the differential DAS areas on their return to port and, thereby, minimize the resulting DAS charge. This was the rationale provided in the Council's recommendation on how to count DAS in the GOM Differential DAS Area implemented under FW 42. As a result, this final interim rule does not change the manner in which the differential DAS counting rate is applied in the GOM, but adopts the same approach for the Interim SNE Differential DAS Area based upon the same rationale.

Comment 16: Three individuals, including one commercial fishery organization (Associated Fisheries of Maine), recommended that, in lieu of differential DAS counting in the GOM and northern portions of GB, the F objectives of the interim action would be better achieved by implementing trip limits on particular stocks, including witch flounder and pollock, and reducing the trip limit for GB cod. In addition, the representative from the DMR recommended implementing zero possession limits for SNE/MA winter

flounder, ocean pout, and both stocks of windowpane flounder.

Response: NMFS did not analyze an alternative that relies solely on trip limits instead of differential DAS counting in the GOM because it is unlikely that reliance upon trip limits alone would achieve the stated objectives for the stocks in the GOM. The Plan Development Team analyzed the daily trip limits that would be necessary to achieve the Amendment 16 rebuilding objectives for each stock. However, that analysis also incorporated a 24-hour minimum DAS charge in order to achieve the conservation objectives for each stock. Reliance upon a combination of measures, including DAS as the principal effort reduction measure, is necessary to achieve the F reductions required to rebuild overfished stocks as much as practicable in this interim action. Trip limits frequently result in regulatory discarding and must be balanced with other measures to minimize unnecessary bycatch, as mandated by the Magnuson-Stevens Act. This interim action implements a suite of measures, including both differential DAS counting and trip limits to reduce F and continue to rebuild overfished stocks.

One of the objectives of this interim action is to implement measures that are consistent, to the maximum extent practicable, with measures being considered in the Council's development of Amendment 16, the action that will follow this interim action. Mirroring the Amendment 16 measures will reduce uncertainty and impacts associated with transitioning from interim measures to the long-term management measures under Amendment 16. Draft effort-control measures currently included in Amendment 16 for non-sector vessels incorporate differential DAS counting in four large areas encompassing an area larger than the Interim Differential DAS Area and the SNE Closure Area originally proposed for this interim action. Although the draft Amendment 16 measures do not include a trip limit for witch flounder, this final interim rule implements a trip limit of 1,000 lb (453.6 kg) per DAS, up to 5,000 lb (2,268 kg) per trip of witch flounder to further reduce F on this stock based upon recommendations from the public and the Council. In addition, both draft Amendment 16 measures and this interim action include zero retention limits for SNE/MA winter flounder and northern windowpane flounder. This interim action also includes a zero possession limit for ocean pout. For southern windowpane flounder, the GOM Differential DAS Area, in conjunction with the Interim SNE Differential DAS Area, is sufficient to achieve the necessary F reductions for this stock and a zero retention limit for this stock is unnecessary.

Comment 17: Two individuals, including one commercial fishery organization (Associated Fisheries of Maine) suggested that differential DAS counting is not needed in the Eastern U.S./Canada Area due to the existence of hard TAC management in the area.

Response: NMFS agrees that differential DAS counting is not necessary in the Eastern U.S./Canada Area. As noted above, this final interim rule does not implement the Interim Differential DAS Area, as proposed, and, when replacing the SNE Closure Area with 2:1 differential DAS counting, removed differential DAS counting from that area of the Interim SNE Differential DAS Area that overlapped with the U.S./Canada Management Area.

Comment 18: One commercial fisherman noted an error in the description of the economic impacts of the proposed measures in the preamble of the proposed interim rule. This commenter indicated that, for vessels fishing exclusively within the GOM, an 18-percent reduction in DAS combined with differential DAS counting at a rate of 2:1 would result in a 59-percent reduction in available DAS, not 36 percent, as stated in the preamble of the proposed interim rule.

Response: NMFS acknowledges this error in the preamble of the proposed rule, but notes that the impacts were correctly reported in the EA supporting this action. The Final Regulatory Flexibility Analysis developed for this action and summarized in this preamble correctly describes the revised impacts of this action.

CA I Hook Gear Haddock SAP

Comment 19: Eighteen commenters supported expanding the CA I Hook Gear Haddock SAP, as requested by the Council. Supporters noted that an expansion of the SAP would be an important means of mitigating the negative impacts of the interim action and enable more access to the healthy stock of GB haddock, while not undermining the status of GB cod. Some commenters noted the existence of pertinent data supporting the contention that the expanded SAP would be consistent with the FMP, and wondered whether an oversight by NMFS had resulted in its conclusions stated in the proposed rule. One commenter estimated that the economic benefits of the expanded SAP would be tens of millions of dollars, and another noted that it offered mitigation with very little associated risk. One commenter noted that the SAP benefits vessels in the 40- to 50-ft (18–22-m) range, but not smaller vessels, due to the distance of the SAP from shore. Lastly, one commenter was confused by the calculation of the haddock TAC.

Response: Pertinent data that support expanding the CA I Hook Gear Haddock SAP as recommended were not available to NMFS prior to the publication of the proposed rule, but were brought to the attention of NMFS during the public comment period by the Cape Cod Commercial Hook Fishermen's Association. This information includes the results of research in CA I that has been reviewed by the Council's Research Steering Committee (RSC) and supported in its May 30, 2007, report. Although the RSC cautioned against the broad application of the results of this research outside of the season and areas tested, a review of the relevant research, including a review by the DMF, indicated that catch rates of haddock with hook gear using a range of baits was significantly higher than cod, and that the catch rates of species in the proposed expanded area are not higher than in the current SAP. Based on this information, NMFS is implementing revisions to the CA I Hook Gear Haddock SAP, including the expansion of both the season and the SAP area in this final interim rule. NMFS is also prohibiting the use of squid as bait, based upon recent research indicating that squid caught higher amounts of cod than any other bait, but is soliciting further comments on this prohibition. The expansion of this SAP will help mitigate some of the negative economic impacts of this action on vessels fishing with hook gear. The elimination of the rules separating sector and common-pool vessels into separate seasons will also provide additional flexibility for all participants. Finally, the calculation of the haddock TAC for this SAP is described in Measure 6 under ''Approved Commercial Measures'' of the preamble of this final interim rule. However, further explanation about the derivation of the formula used to calculate the haddock TAC for this SAP is available in the EA supporting FW 42 to the FMP.

Comment 20: One commercial fisherman requested that, because of the uncertainty associated with the final interim measures and when such measures would be made public, the final interim rule should allow gillnet vessels the opportunity to change the gillnet designation associated with their permit (i.e., as either a Day or Trip gillnet vessel) after the permit has been

issued, citing a similar allowance in a 2002 interim final rule.

Response: NMFS agrees with the commenter. Since gillnet vessel owners may have renewed their groundfish permits and selected a particular gillnet designation for FY 2009 without knowledge of the final interim measures, and because this designation is effective for the remainder of the fishing year and defines how gillnet vessels can operate, NMFS will allow a vessel owner that has already elected a gillnet designation prior to May 1, 2009, to change the gillnet designation associated with his/her permit through June 12, 2009. This will provide additional time for the vessel owner to review the final interim measures and revise the gillnet designation for his/her permit, if necessary.

Comment 21: Two commenters did not support the termination of the SNE Winter Flounder SAP because they asserted that the SAP works to reduce discarding in the summer flounder fishery in the spring and fall. Further, they suggested a requirement that vessels fishing in the SAP use mesh size consistent with the FMP.

Response: The SNE/MA Winter Flounder SAP currently allows a limited access NE multispecies vessel fishing for summer flounder west of 72° 30' W. long. to retain up to 200 lb (91 kg) of winter flounder while not under a NE multispecies DAS, provided the vessel complies with various restrictions. Due to the severely depleted status of SNE/MA winter flounder, and the goal of reducing F to as close to zero as practicable, elimination of this SAP is justified. Although the SAP can be effective at reducing discarding, the SAP may also enable limited targeting of winter flounder. Vessels are more likely to modify their fishing practices and attempt to avoid encountering winter flounder if winter flounder possession is not allowed.

Comment 22: One commenter stated that NMFS should prepare an Environmental Impact Statement (EIS) in order to analyze the potential impacts of the alternatives considered, instead of an EA.

Response: NMFS believes that its analysis of the impacts of the alternatives complies with the National Environmental Policy Act (NEPA). NEPA provides a mechanism for identifying and evaluating environmental impacts associated with Federal actions, and for considering a reasonable range of alternatives to avoid or minimize adverse environmental impacts. As fully explained in the EA, NMFS concluded that the preparation of an EIS for this action is not necessary.

Comment 23: One commercial fisherman supported the delayed opening of the Eastern U.S./Canada Area until August 1.

Response: NMFS agrees that it is prudent and consistent with Council intent to delay the opening of the Eastern U.S./Canada Area for trawl gear until August 1, 2009. As fully explained in the proposed interim rule, a delayed opening of the Eastern U.S./Canada Area is intended to maximize the harvest of cod and other species from the area by reducing the catch rate of cod, and avoiding early closure of the area.

Comment 24: Three comments were received, including one from the GB Cod Fixed Gear Sector, one from the GB Cod Hook Sector, and one from a commercial fishery organization (Cape Cod Commercial Hook Fisherman's Association), requesting that the interim action include a provision that would allow the GB Cod Hook Sector to transfer or lease GB cod quota to the GB Cod Fixed Gear Sector. Respondents cited the substantially reduced FY 2009 target TAC for GB cod and the likelihood that the GB Cod Fixed Gear will catch its allocation of that stock and be shut down prior to the end of FY 2009.

Response: Under the current regulations, existing sectors are allocated a portion of the yearly GB cod TAC based upon the landings histories of participating vessels. A sector can only change its share of the GB cod TAC by adding or removing participating vessels from its roster. The draft measures in Amendment 16 include provisions that would allow the transfer of sector allocations of particular stocks, but these provisions have not been selected as a preferred alternative or formally adopted by the Council. As indicated in the response to Comment 4, NMFS believes that an interim rule is not the appropriate means to implement novel management tools such as sector quota trading; it is intended to address short-term needs to end or reduce overfishing while the Council is developing longer-term measures for the fishery. Moreover, as detailed above in Measure 12 under ''Approved Commercial Measures'' of this preamble, because this final interim rule revises the 2009 GB cod target TAC to reflect estimated F rather than Fmsy, the GB cod TAC allocations to both sectors will increase by 66.1 mt for the GB Cod Hook Sector and by 95.8 mt for the GB Cod Fixed Gear Sector. As a result, this revised measure should help address the concerns identified by the commenters.

DAS Leasing

Comment 25: One commercial fisherman and one representative of the GB Cod Fixed Gear Sector opposed the removal of the DAS leasing cap, indicating that it would activate latent effort and undermine the intent of the interim action to reduce overfishing. In addition, the respondents objected to the apparent contradiction between drastically cutting DAS through allocation reductions and differential DAS counting, but increasing the access to DAS by allowing vessels to lease an unlimited number of DAS from other vessels.

Response: NMFS disagrees that the removal of the DAS leasing cap conflicts with the objectives of the interim action. The objectives of this interim action include ending overfishing and rebuilding overfished stocks. However, because effort reductions necessary to achieve the conservation objectives of this action impose substantial economic impacts on the groundfish fishery, another objective of this interim action is to mitigate the economic impacts of effort controls as much as practicable. Analysis supporting this action indicates that some vessels, particularly those with low DAS allocations and high expenses, will require additional DAS to remain economically viable. Because nearly 15 percent of vessels participating in the DAS Leasing Program in recent years were limited by the DAS leasing cap, eliminating this cap through the interim action would enable groundfish vessels greater opportunity to obtain additional DAS and remain economically viable. In conjunction with DAS reductions and differential DAS counting, the measures implemented by this interim action would not increase F on overfished stocks and would achieve both the conservation and mitigation objectives of this action.

Comment 26: Representatives of both the GB Cod Hook and Fixed Gear Sectors and one commercial fishery organization (Cape Cod Commercial Hook Fisherman's Association) supported changes to the DAS Leasing Program to allow sector vessels to lease DAS to and from non-sector vessels, citing the limited number of DAS available to sector vessels and the need to continue to acquire more DAS to operate under the DAS system until sectors could be allocated quota for all groundfish stocks under Amendment 16.

Response: NMFS agrees. Currently, sector effort is managed by a hard TAC on GB cod and by DAS for all other stocks. Accordingly, sectors are

impacted by DAS restrictions nearly as much as common pool vessels. As noted in the response to Comment 25, analysis supporting this interim action indicates that some vessels will need to acquire additional DAS to remain economically viable. Because the DAS Leasing Program already imposes size restrictions on which vessels can lease to and from one another, continuing to prohibit vessels participating in sectors from leasing to non-sector vessels limits the pool of DAS available for leasing, especially considering the fact that sectors are only restricted by hard TACs for one stock at this time. Therefore, in order to increase flexibility and efficiency in the DAS market and provide greater access to available DAS, this interim action allows groundfish DAS vessels to lease DAS to and from any other groundfish DAS vessel.

Comment 27: One commercial fishery organization (West End Fisherman's Association) recommended the interim action implement measures in the recreational fishery. One party/charter operator indicated that party/charter vessels fishing on multiple day trips will benefit from being able to take advantage of double bag limits for trips over 15 hours, but suggested that it was not supported by any analysis. This commenter also highlighted that previous efforts to impose such a bag limit on party/charter vessels was not included because it would have resulted in severe economic impacts to such operations and noted that similar measures are currently not being considered by the Council under Amendment 16. The party/charter operator further indicated that the decrease in size limit for haddock will not help party/charter vessels operating on GB, as most haddock are found in closed areas inaccessible to recreational vessels.

Response: The measures implemented by this interim action include restrictions on the recreational fishery, namely a daily GB cod bag limit for party/charter vessels and, for both private recreational vessels and party/charter vessels, extension of the closed season for GOM cod and a possession prohibition for SNE/MA winter flounder. NMFS disagrees that the GB cod bag limit for party/charter vessels is not supported by any analysis. In fact, the biological, economic, and social analyses supporting this provision are detailed in Sections 17.1, 17.2, and 17.3 of the EA supporting this action, respectively. The respondent is correct that the measures proposed under Amendment 16 may not include a similar provision, but that does not mean that the measures included in this interim action are unnecessary. In fact, such measures are necessary to ensure a similar reduction in F on GB cod across both the commercial and recreational fisheries, consistent with the objectives of this action. Finally, despite the fact that charter/party vessels cannot access closed areas on GB, the reduced haddock size limit is expected to increase opportunities for recreational vessels to retain haddock in all areas open to such vessels. A similar size reduction for GOM haddock is proposed under Amendment 16 for consideration at public hearings.

Comment 28: One commenter stated that the proposed GB cod TAC was too low, and noted the economic impacts of a lower TAC.

Response: Typically, the size of the GB cod target TAC is set based upon a projection of the catch that will be associated with a particular F and stock size for a given year. As noted in Measure 3 under ''Approved Commercial Measures'' of this preamble, this final interim rule has changed the manner in which target TACs were calculated from that in the proposed rule. In the case of the GB cod target TAC for FY 2009, this target TAC is based upon the F expected to result from measures implemented by this action and the GARM III estimation of stock size for 2009 and is specified as 5,501 mt. Although this is an increase to the TAC specified in the proposed rule, it is a decrease in the size of the TAC relative to the past TACs. This is due to the reductions in F estimated to be achieved by measures implemented by this final interim rule. The estimated 2009 F is lower than the objective set during the first 5 years of the rebuilding period. Although the stock size is increasing, the relatively low estimated 2009 F results in a lower target TAC. The proposed rule incorrectly stated that the FY 2009 GB cod TAC would be 3,506 mt, because the Canadian TAC of 1,173 mt had been subtracted. The FMP precedent for specifying the GB cod target TAC is to specify the TAC that corresponds to the whole stock, including the Canadian portion of the TAC, resulting in a total GB cod target TAC of 5,501 mt (4,328 mt available to U.S. vessels, plus 1,173 mt available to Canadian vessels) for FY 2009.

Comment 29: Three commenters believed that the economic analysis underestimated the economic impacts, and noted specific concerns regarding the analysis of impacts on the states of New York and Maine. One commenter referenced a break-even analysis that NMFS had prepared, and noted that many vessels will not be able to break even. One commenter stated that the revenue analysis is flawed, and one commenter noted that a 31-percent reduction in revenue is enough to destroy most small businesses.

Response: NMFS believes that the economic analysis provides sufficient information for decision makers to compare the potential economic impacts among alternatives in order to select an alternative that best complies with the Magnuson-Stevens Act. The aggregate economic impacts of the alternatives are included in the EA, including estimates of revenue reductions, by state, for each alternative. For each alternative, the estimated changes in groundfish trip revenue and total trip revenue are provided, and expressed as a percent change in revenue and the estimated revenue in dollars by state. As noted above, this final interim rule implements measures that are changed from those in the proposed rule. Therefore, the estimated economic impacts reported for the preferred alternative in the EA prepared for this action and summarized in this preamble reflect impacts associated with revised measures and will not be consistent with the impacts cited by the commenters. For example, the original analysis indicated that, for Maine groundfish vessels, the average total revenue would decline by 34 percent and the estimated total revenue would be $12,277,101. However, the updated economic analysis based upon revised measures indicates that the impacts to Maine would be a 12.2-percent reduction in total revenue, and the revised estimate of total revenue would be $16,419,523. This revised analysis indicates that, for New York, groundfish vessels would see a decline in average total revenue of about 4.2 percent (6 percent was estimated in the proposed rule), and the estimated total revenue would be $13,710,083 ($13,430,633 was estimated in the proposed rule) under the measures implemented by this final interim rule. Although the estimates of percentage reductions in the EA represent the best estimation of the relative amount of revenue reduction anticipated, the estimated revenue in dollars, by state, that would result from each alternative is an underestimation, because the analysis used only a subset of the total fishery data due to missing information.

Comparisons of past economic analyses of FMP management measures with the realized economic impacts have shown that the CAM tends to overestimate the economic impacts of management measures. NMFS acknowledges that an analysis of the short-term impacts on the regional economy was not conducted (input/

output model analysis). An input/output analysis provides an estimation of how changes in the economic activity of a particular industry would affect other industries from which it purchases and to which it sells goods and services. Thus, in addition to reductions in harvesting revenues, this analysis captures losses associated with the commercial fishing industry buying fewer inputs and the upstream losses that result from less product being available to local seafood dealers and processors. Such secondary and tertiary impacts are proportional to the direct impacts on the fishing industry (which have been estimated), and the lack of an input/output analysis does not prevent a reasonable and informed comparison of management alternatives.

The economic analysis for the measures implemented by this final interim rule indicates that the total reduction in groundfish trip revenue would be approximately 14.7 percent, or $14.8 million. Based on the break-even analysis, NMFS agrees that some small businesses may not be able to remain profitable, and many will have to lease DAS in order to remain profitable. However, as stated above, the CAM tends to overestimate revenue reductions. Vessels typically modify their fishing behavior in response to new regulations, and increase fishing effort on other non-groundfish species. Some vessels will be able to lease additional DAS and continue fishing at a level that produces a similar amount of revenue as in the past, but at a reduced profit margin, while other vessels will either continue to fish at an economic loss, or cease fishing.

Changes From the Proposed Rule

NMFS has made several changes to the proposed rule, including changes as a result of public comment. Some of these changes are substantive changes, whereas others are administrative in nature, clarify new management measures, or correct inadvertent errors or omissions in the proposed rule. These changes are listed below in the order that they appear in the regulations.

In § 648.4, paragraph (c)(2)(iii)(C) is added to allow gillnet vessels that have already elected a gillnet designation as a Day or Trip gillnet vessel to change this designation through June 31, 2009.

In § 648.81, the proposed addition of paragraph (n) has been removed because the proposed SNE Closure Area is not implemented by this final interim rule.

In § 648.82, paragraph (e)(4) has been revised to retain the existing GOM Differential DAS Area, rather than implementing the proposed Interim Differential DAS Area and to insert an additional Interim SNE Differential DAS Area. In addition, paragraph (e)(4)(iii) has been revised to include provisions for applying the differential DAS counting rate to vessels fishing in either the GOM Differential DAS Area or the Interim SNE differential DAS Area, including measures to reflect that NE multispecies vessels fishing with hook gear in the Interim SNE Differential DAS Area will not be charged DAS at a rate of 2:1.

In § 648.85, paragraph (a)(3)(viii) has been revised to reflect revised declaration requirements associated with declaring into one or both of the differential DAS areas defined under § 648.82(e)(4). Proposed revisions to paragraph (b)(7) of this section have been removed and paragraph (b)(7) has been suspended in its entirety. Instead, paragraph (b)(11) has been added in order to revise the CA I Hook Gear Haddock SAP regulations to expand the scope of the SAP in both season and area, eliminate the split in the season and TAC between sector and non-sector vessels, and prohibit the use of squid as bait. Paragraph (b)(10)(i)(F) has been revised to reflect the implementation of differential DAS counting in SNE. Paragraphs (b)(10)(v)(G) through (I) have been added to identify the GB yellowtail flounder, GB winter flounder, and GOM winter flounder stock areas, respectively, for the purposes of the Regular B DAS Program.

In § 648.86, paragraph (l) has been revised to include references the Interim SNE Differential DAS Area implemented under this final interim rule. In addition, paragraph (m) has been revised to reflect a new trip limit for witch flounder instead of a revised trip limit for white hake. The existing trip limit for white hake specified at § 648.86(e) will remain in effect.

In § 648.92, paragraphs (b)(1)(i), (b)(1)(iii)(A), (b)(2), and (b)(8)(v) have been suspended; and paragraphs (b)(1)(iii)(C), (b)(1)(vi), (b)(8)(vi), and (b)(10) have been added to mitigate the impacts of the interim management measures on the monkfish fishery.

In § 648.95, paragraph (h) has been suspended and paragraph (i) has been added to replace reference to paragraph § 648.92(b)(2), because that paragraph has been suspended, and to insert reference to the newly added § 648.92(b)(10).

Classification

NMFS has determined that the management measures implemented by this final interim rule are necessary for the conservation and management of the NE multispecies fishery, and are consistent with the Magnuson-Stevens Act and other applicable laws.

There is good cause under 5 U.S.C. 553(d)(3) to waive the 30-day delay in effective date for the measures implemented by this final interim rule. This final interim rule would immediately reduce fishing mortality for all stocks managed under the FMP in order to continue to rebuild overfished stocks. As a result of the January 23, 2009, February 17, 2009, and February 23, 2009, Federal Court Orders in the case of *Commonwealth of Massachusetts and State of New Hampshire* v. *Carlos M. Gutierrez* (Civil Action No.: 06–12110–EFH), several critical conservation measures in the NE multispecies fishery have been vacated for the latter portion of FY 2008. While the precise impacts of these Court Orders are unknown at this time, it is likely that the vacation of these measures, particularly restrictive trip limits and differential DAS counting, caused fishing mortality to increase on overfished stocks due to increased fishing effort. Because such increases in fishing effort occurred during peak spawning periods for particular overfished stocks, the impacts of these Court Orders could affect efforts to rebuild such stocks. As a result, it is imperative that interim measures designed to reduce fishing mortality on all groundfish stocks be implemented quickly. In order to avoid unnecessary confusion about which regulations are in effect, and, thereby, increase compliance with, and the effectiveness of, conservation measures implemented under this final interim rule, such measures must become effective by the start of the fishing year on May 1, 2009. While this final interim rule implements measures that will reduce fishing effort in the NE multispecies fishery, such measures are necessary to ensure long-term economic benefits associated with rebuilt stocks. Thus, it would be contrary to the public interest to delay the effectiveness of measures implemented by this final interim rule.

In addition, while NOAA believes there is sufficient support in the record to justify the changes between the proposed and final interim rule, NOAA nonetheless believes there is good cause to waive notice and opportunity to comment on these changes under 5 U.S.C. 553(b)(B). This good cause waiver is based upon the same reasons described above concerning the waiver of the 30-day delay in effective date.

An EA was prepared for this action that analyzed the environmental impacts of the measures being implemented, as well as alternatives to such measures. This EA was revised

since the publication of the proposed rule to include further analysis of several additional alternative combinations of management measures. A copy of the Finding of No Significant Impact for the EA prepared for this action is available from the Regional Administrator (see **ADDRESSES**).

This final interim rule has been determined to be significant for the purposes of Executive Order (E.O.) 12866.

This final interim rule does not contain policies with Federalism or ''takings'' implications as those terms are defined in E.O. 13132 and E.O. 12630, respectively.

Final Regulatory Flexibility Analysis (FRFA)

NMFS, pursuant to section 604 of the Regulatory Flexibility Act (RFA), prepared this FRFA in support of the measures implemented by this final interim rule. The FRFA incorporates the updated economic impacts summarized in the IRFA, but revised this final interim rule to account for changes from the proposed rule measures implemented by this final action. A summary of the IRFA was published in the proposed rule for this action and is not repeated here. A description of why this action was considered, the objectives of, and the legal basis for this rule are contained in the preamble to the proposed and this final rule and are not repeated here. A copy of this analysis is available from the Regional Administrator (see **ADDRESSES**).

Summary of the Issues Raised by Public Comments in Response to the IRFA

A Summary of the Assessment of the Agency of Such Issues, and A Statement of Any Changes Made From the Proposed Rule as a Result of Such Comments

Comment A: One commenter estimated that the economic benefits of an expanded CA I Hook Gear Haddock SAP would be tens of millions of dollars and recommended that NMFS implement measures to expand this SAP.

Response: As highlighted in the response to Comment 19 above, NMFS has implemented several revisions to the CA I Hook Gear Haddock SAP through this final interim rule. Because this final interim rule would substantially increase both the size and extend the season of this SAP, it is unclear how such revisions would affect participation in this SAP. It is likely that participation would increase in both the number of participants and the number of fishing trips throughout the expanded season. As a result, it is difficult to accurately predict the economic impacts associated with this measure. Qualitatively, the economic impacts are likely to be positive, as this measure provides greater access to available haddock resources and at a higher catch rate than would otherwise be experienced outside of the SAP because of its location within CA I.

Comment B: As highlighted in Comment 29 above, three commenters believed that the economic analysis underestimated the economic impacts of the proposed measures, highlighted specific concerns regarding the analysis of impacts on New York and Maine, and noted that many vessels will not be able to break even. One commenter stated that the revenue analysis is flawed and one commenter noted that a 31-percent reduction in revenue is enough to destroy most small businesses.

Response: The response to Comment 29 explains that economic impacts were underestimated due to missing data and the fact that an analysis of secondary and tertiary economic impacts of the proposed measures on other industries that interact with the fishing industry was not conducted. However, when compared to assessments of economic impacts associated with previous actions, the estimated economic impacts to the directed fishery often overestimated realized impacts.

Description of and Estimate of the Number of Small Entities to Which the Final Interim Rule Would Apply

The Preferred Alternative would affect regulated entities engaged in commercial fishing for groundfish and entities that provide recreational fishing services to anglers. These entities include any vessel that has been issued either an open access or a limited access Federal permit under the FMP. During FY 2007, 2,822 vessels were issued commercial limited access and open access NE multispecies permits. Of these, only 739 actually landed groundfish. A total of 762 NE multispecies party/charter permits were issued during FY 2007. Additionally, limited access permit holders (1,525 during FY 2007) may take passengers for hire, but do not possess a party/charter permit, since the FMP prohibits issuing both an open access and a limited access permit to the same vessel. Of the 762 vessels issued an open access party/charter permit, only 128 reported taking at least one for-hire trip, and only 74 reported keeping groundfish on one or more trips.

The size standard for commercial fishing entities is $4 million in sales, while the size standard for party/charter operators is $7 million in sales. Available data indicate that, based on 2005–2007 average conditions, median gross sales by commercial fishing vessels were just over $200,000, and no single fishing entity earned more than $2 million. Available data are not adequate to identify affiliated vessels, so each operating unit is considered a small entity for purposes of the RFA. For regulated party/charter operators, the median value of gross receipts from passengers was just over $9,000, and did not exceed $500,000 in any year during 2001 to 2007. Therefore, all regulated commercial fishing and all regulated party/charter operators are determined to be small entities under the RFA, and, accordingly, there are no differential impacts between large and small entities under this rule. The remaining discussion describes the number of regulated entities, the number of participating regulated entities, and the potential economic impacts on participating regulated entities for party/charter operators and for commercial fishing vessels.

Description of the Projected Reporting, Recordkeeping, and Other Compliance Requirements of This Final Interim Rule

This final interim rule contains collection-of-information requirements that have previously been subject to review and approval by OMB under control number 0648–0202 and 0648.0212. Public reporting burden for these collections of information are estimated as follows:

1. VMS purchase and installation, OMB# 0648–0202 (1 hr/response);
2. VMS proof of installation, OMB# 0648–0202 (5 min/response);
3. Automated VMS polling of vessel position, OMB# 0648–0202 (5 sec/response);
4. Declaration of intent to participate in the Regular B DAS Program, or fish in the U.S./Canada Management Areas and any associated SAPs, and the DAS type to be used via VMS prior to each trip into the one of these programs, OMB# 0648–0202 (5 min/response);
5. Notice requirements for observer deployment prior to every trip into the Regular B DAS Program or the U.S./Canada Management Areas and associated SAPs OMB# 0648–0202, (2 min/response);
6. Standardized catch reporting requirements while participating in the Regular B DAS Program, the CA I Hook Gear Haddock SAP, or the U.S./Canada Management Area and its associated SAPs, OMB# 0648–0212 (15 min/response);
7. Standardized reporting of Universal Data I.D. while participating in the

Regular B DAS Program or fishing in the U.S./Canada Management Area, associated SAPs, and CA I SAP, OMB# 0648–0212 (15 min/response);

8. DAS ''flip'' notification via VMS for the Regular B DAS Program, OMB# 0648–0202 (5 min/response);

9. Sector Manager daily reports for CA I Hook Gear Haddock SAP, OMB# 0648–0212 (2 hr/response);

10. DAS Leasing Program application, OMB# 0648–0202 (10 min/response);

11. DAS Transfer Program application, OMB# 0648–0202 (10 min/response); and

12. Declaration of intent to fish inside and outside of the Eastern U.S./Canada Area on the same trip, OMB# 0648–0202 (5 min/response).

13. Declaration of area and gear via VMS when fishing under a NE multispecies DAS, OMB# 0648–0202 (5 min/response); and

14. Declaration of entry into the GOM and SNE Differential DAS Area when not fishing or transiting via VMS, OMB# 0648–0202 (5 min/response).

These estimates include the time for reviewing instructions, searching existing data sources, gathering and maintaining the data needed, and completing and reviewing the collection of information. Send comments regarding these burden estimates or any other aspect of this data collection, including suggestions for reducing the burden, to NMFS (see **ADDRESSES**) and by e-mail to *David_Rostker@omb.eop.gov*, or fax to 202–395–7285.

Notwithstanding any other provision of the law, no person is required to respond to, and no person shall be subject to penalty for failure to comply with, a collection of information subject to the requirements of the PRA, unless that collection of information displays a currently valid OMB control number.

Description of Steps the Agency Has Taken To Minimize the Significant Economic Impact on Small Entities Consistent With the Stated Objectives of Applicable Statutes

During the development of this final interim rule, NMFS considered and fully analyzed five alternatives, including the no action alternative, a differential DAS alternative, a DAS reduction and closed area alternative, the original proposed measures, and the measures implemented by this final interim rule. Three other alternatives were considered, but rejected, including the measures recommended by the Council, an expanded Regular B DAS Program alternative, and a hard TAC alternative. The reasons behind rejecting the Council's preferred alternative are explained in the preamble of the proposed interim rule and further discussed in the response to Comment 4 above. The expanded Regular B DAS Program alternative was rejected because it would have required vessels to use specialized nets that would have been costly to acquire. In addition, this alternative would have resulted in unnecessary loss of yield from several groundfish stocks. The hard TAC alternative was an attempt to increase the effectiveness of the Council's recommended measures. However, this alternative was rejected because it would likely have resulted in early closure of the fishery and would have been complex, costly, and impractical to implement for the short duration of an interim action.

In response to comments emphasizing the economic impacts of the proposed measures, NMFS partially analyzed three additional alternatives that included various combinations of differential DAS areas, closure areas, and trip limits in order to minimize the economic impacts of this action without compromising the ability of the fishery to achieve the long-term rebuilding objectives in the FMP. One of these alternatives was selected as the preferred alternative for this action and is implemented by this final interim rule. As discussed in the responses to comments, the measures implemented by this final interim rule reduce F on all stocks, but do not achieve the F objectives for GB cod and witch flounder. However, this will not compromise the ability of the fishery to rebuild overfished stocks, provided additional measures to end overfishing and rebuild overfished stocks are implemented through future management actions, as necessary. While the no action alternative would result in the fewest economic impacts (a reduction of total trip revenue of approximately 7.7 percent, or $12.2 million, and a reduction of groundfish trip revenue of 12.1 percent, or $12.2 million), that alternative would also achieve the least amount of reduction in F. In contrast, the measures implemented by this final interim rule would result in substantially higher reductions in F for some stocks, while minimizing reductions in both groundfish and total revenue than the other alternatives considered. It is estimated that these measures would achieve much lower reductions in both total trip revenue (a reduction of 9.4 percent, or $14.8 million) and groundfish trip revenue (a reduction of 14.7 percent, or $14.8 million) when compared to the other three alternatives considered, including the originally proposed measures (see the Classification section of the preamble of the proposed interim rule for a full discussion of the economic impacts associated with those alternatives). This is true across all states. This action is expected to result in positive economic impacts to vessels operating out of New Jersey due to the replacement of the existing SNE Differential DAS Area with the Interim SNE Differential DAS Area. In addition, the measures implemented by this action achieve a higher yield from several groundfish stocks as a result of higher landings than the other alternatives. As noted in the response to Comment 4, preserving future yield in the fishery becomes increasingly important as the fishery moves toward quota-driven management regimes such as sector management, as proposed in draft Amendment 16, and annual catch limits mandated by the recent revision to the Magnuson-Stevens Act.

In addition to revisions designed to continue to reduce overfishing, this action also implements a number of measures intended to mitigate the economic impacts of effort reductions associated with conservation measures. These measures include revisions to the DAS Leasing and Transfer Programs, modifications to the Regular B DAS Program, continuation of the Eastern U.S./Canada Haddock SAP, expansion of the CA I Hook Gear Haddock SAP in both area and season, and a reduction in the minimum size of haddock for both recreational and commercial vessels. Modifications to the DAS Leasing Program attempt to remove administrative barriers that would unnecessarily limit the ability of vessels to lease DAS to one another. This increases flexibility and efficiency in the program by providing greater opportunities for vessels to acquire and sell DAS to other similar-sized vessels. In addition, analysis indicates that 15 percent of vessels participating in the DAS Leasing Program were affected by the DAS leasing cap in FY 2007. Elimination of this cap through this final interim rule eliminates that restriction and will help enable vessels to acquire sufficient DAS to remain economically viable. Modifications to the DAS Transfer Program eliminate the DAS conservation tax. This is expected to encourage transfers and will likely result in more efficient operations, as vessel owners could combine DAS and other fishing permits from multiple vessels onto one operational platform. Revisions to the Regular B DAS Program, including the redistribution of incidental catch TACs and quarterly

TAC roll-over, are intended to increase the efficiency of the program and provide more opportunities for vessels to take advantage of this program. Because the original intent of the Regular B DAS Program was to encourage the selective harvest of healthy stocks while minimizing the catch of overfished stocks, increasing participation in this program is one additional means of accomplishing the dual objectives of this action: Ensuring continued progress toward rebuilding overfished stocks while mitigating the economic impacts to the extent practicable. Measures to expand the CA I Hook Gear Haddock SAP would also contribute toward achieving these two objectives by greatly increasing opportunities to harvest the abundant haddock resource on GB using gear proven to selectively harvest this stock, while minimizing the bycatch of cod. The extension of the season from 3 months to 9 months also enables vessels to take advantage of market conditions to maximize economic return on trips into this SAP. Finally, although slower growth rates delayed recruitment of recent large year classes of haddock into the fishery, most of these fish have reached sizes susceptible to capture by existing mesh sizes. This action reduces the minimum size limit for haddock from 19 inches (48.3 cm) to 18 inches (45.7 cm) to increase yield from this species and increase revenue in the groundfish fishery.

In summary, the measures implemented by this action attempt to strike a balance, under the authority of section 305(c) of the Magnuson-Stevens Act, between continuing efforts to reduce overfishing and rebuild overfished stocks and minimizing economic impacts to affected entities, as required by the Magnuson-Stevens Act and other applicable law. While this action does not implement measures that would, by themselves, achieve all of the mortality objectives outlined in the preamble, together with measures in draft Amendment 16 and potential future actions, these measures will assist the fishery to meet the requirements to rebuild overfished stocks and maintain participation of fishing communities in the groundfish fishery, as required by the Magnuson-Stevens Act, during the transition to more sustainable fishing practices in future years, without jeopardizing rebuilding objectives.

Section 212 of the Small Business Regulatory Enforcement Fairness Act of 1996 states that, for each rule or group of related rules for which an agency is required to prepare a FRFA, the agency shall publish one or more guides to assist small entities in complying with the rule, and shall designate such publications as ''small entity compliance guides.'' The agency shall explain the actions a small entity is required to take to comply with a rule or group of rules. As part of this rulemaking process, a letter to permit holders that also serves as the small entity compliance guide (the guide) was prepared. Copies of this final rule are available from the Northeast Regional Office (see **ADDRESSES**), and the guide, i.e., permit holder letter, will be sent to all holders of permits for the multispecies and monkfish fisheries. The guide and this final rule will be available upon request.

List of Subjects in 50 CFR Part 648

Fisheries, Fishing, Reporting and recordkeeping requirements.

Dated: April 6, 2009.

James W. Balsiger,

Acting Assistant Administrator for Fisheries, National Marine Fisheries Service.

■ For the reasons stated in the preamble, 50 CFR part 648 is amended as follows:

PART 648—FISHERIES OF THE NORTHEASTERN UNITED STATES

■ 1. The authority citation for part 648 continues to read as follows:

Authority: 16 U.S.C. 1801 *et seq.*

■ 2. In § 648.4, paragraph (c)(2)(iii)(A) is suspended and paragraph (c)(2)(iii)(C) is added to read as follows:

§ 648.4 Vessel permits.

* * * * *

(c) * * *

(2) * * *

(iii) * * *

(C) For vessels fishing for NE multispecies with gillnet gear, with the exception of vessels fishing under the Small Vessel permit category, an annual declaration as either a Day or Trip gillnet vessel designation as described in § 648.82(j). A vessel owner electing a Day or Trip gillnet designation must indicate the number of gillnet tags that he/she is requesting, and must include a check for the cost of the tags. For the 2009 fishing year, a vessel owner that has already elected this designation prior to May 1, 2009, may change this designation through June 12, 2009. For the 2009 fishing year only, a vessel may fish under more than one gillnet category. A permit holder letter will be sent to the owner of each eligible gillnet vessel, informing him/her of the costs associated with this tagging requirement and providing directions for obtaining tags. Incomplete applications, as described in paragraph (e) of this section, will be considered incomplete for the purpose of obtaining authorization to fish in the NE multispecies gillnet fishery and will be processed without a gillnet authorization.

* * * * *

■ 3. In § 648.14:

■ A. Paragraphs (a)(50), (53), (121), (129), (130), (132), (146), (153), (165), (173) through (175), and (177) are suspended.

■ B. Paragraphs (c)(7), (23) through (26), (33), (39), (50), (51), (57) through (78), (81) through (83), (85), (86), (88), and (89) are suspended.

■ C. Paragraphs (g)(4) and (5) are suspended.

■ D. Paragraphs (a)(181) through (188), (c)(90) through (134), and (g)(6) and (7) are added.

The additions read as follows:

§ 648.14 Prohibitions.

* * * * *

(a) * * *

(181) Enter or fish in the Western U.S./Canada Area or Eastern U.S./Canada Area specified in § 648.85(a)(1), unless declared into the area in accordance with § 648.85(a)(3)(viii).

(182) If declared into one of the areas specified in § 648.85(a)(1), fish during that same trip outside of the declared area, unless in compliance with the applicable restrictions specified under § 648.85(a)(3)(viii)(A) or (B).

(183) Fail to notify NMFS via VMS prior to departing the Eastern U.S./Canada Area, when fishing inside and outside of the area on the same trip, in accordance with § 648.85(a)(3)(viii)(A)(*1*).

(184) When fishing inside and outside of the Eastern U.S./Canada Area on the same trip, fail to abide by the most restrictive DAS counting, trip limits, and reporting requirements that apply, as described in § 648.85(a)(3)(viii)(A).

(185) If fishing inside the Eastern U.S./Canada Area and in possession of fish in excess of what is allowed under the most restrictive regulations that apply outside of the Eastern U.S./Canada Area, fish outside of the Eastern U.S./Canada Area on the same trip, as prohibited under § 648.85(a)(3)(viii)(A).

(186) Fail to comply with the reporting requirements under § 648.85(a)(3)(viii)(A)(*2*) when fishing inside and outside of the Eastern U.S./Canada Area on the same trip.

(187) If fishing with trawl gear under a NE multispecies DAS in the Eastern U.S./Canada Area defined in § 648.85(a)(1)(ii), fail to fish with a haddock separator trawl, flounder trawl net, or Ruhle trawl, as specified in

§ 648.85(a)(3)(ix) and (b)(10)(iv)(J)(*3*), unless otherwise allowed under the Eastern U.S./Canada Haddock SAP rules in § 648.85(b)(8)(v)(E).

(188) Possess, land, or fish for regulated species while in possession of scallop dredge gear on a vessel not fishing under the scallop DAS program as described in § 648.53, or fishing under a general scallop permit, unless the vessel and the dredge gear conform with the stowage requirements of § 648.23(b), or unless the vessel has not been issued a multispecies permit and fishes for NE multispecies exclusively in state waters.

* * * * *

(c) * * *

(90) If fishing under the Eastern U.S./Canada Haddock SAP, fish for, harvest, possess, or land any regulated NE multispecies from the area specified in § 648.85(b)(8)(ii), unless in compliance with the restrictions and conditions specified in § 648.85(b)(8)(v)(A) through (M).

(91) If fishing under a Category B DAS in the Closed Area II Yellowtail Flounder SAP specified in § 648.85(b)(3), the Regular B DAS Pilot Program specified in § 648.85(b)(10), or the Eastern U.S./Canada Haddock SAP Pilot Program specified in § 648.85(b)(8), remove any fish caught with any gear, including dumping the contents of a net, except on board the vessel.

(92) Possess or land per trip more than the possession or landing limits specified under §§ 648.86(a), (c), (e), (g), (h), (j), (l), (m), and (n) and 648.82(b)(5) and (6), if the vessel has been issued a limited access NE multispecies permit or open access NE multispecies permit, as applicable.

(93) Fail to declare through VMS the intent to be exempt from the GOM cod trip limit under § 648.86(l)(1), as required under § 648.86(l)(4), or fish north of the exemption line if in possession of more than the GOM cod trip limit specified under § 648.86(l)(1).

(94) Enter port, while on a NE multispecies DAS trip, in possession of more than the allowable limit of cod specified in § 648.86(l)(1), unless the vessel is fishing under the cod exemption specified in § 648.86(l)(4).

(95) For vessels fishing in the NE multispecies DAS program under the provisions of § 648.10(c), the call-in system, fail to remain in port for the appropriate time specified in § 648.86(l)(1)(ii)(A), except for transiting purposes, provided the vessel complies with § 648.86(l)(3). For vessels fishing in the NE multispecies DAS program under the provisions of § 648.10(b), the VMS system, fail to declare through VMS that insufficient DAS have elapsed in order to account for the amount of cod on board the vessel as required under § 648.86(l)(1)(ii)(B).

(96) Enter port, while on a NE multispecies DAS trip, in possession of more than the allowable limit of cod specified in § 648.86(l)(2).

(97) For vessels fishing in the NE multispecies DAS program under the provisions of § 648.10(c), the call-in system, fail to remain in port for the appropriate time specified in § 648.86(l)(2)(ii)(A), except for transiting purposes, provided the vessel complies with § 648.86(l)(3). For vessels fishing in the NE multispecies DAS program under the provisions of § 648.10(b), the VMS system, fail to declare through VMS that insufficient DAS have elapsed in order to account for the amount of cod on board the vessel as required under § 648.86(l)(2)(ii)(B).

(98) Discard legal-sized NE regulated multispecies, ocean pout, Atlantic halibut, or monkfish while fishing under a Regular B DAS in the Regular B DAS Program, as described in § 648.85(b)(10)(iv)(E).

(99) If fishing under a Regular B DAS in the Regular B DAS Program, fail to comply with the DAS flip requirements of § 648.85(b)(10)(iv)(E) if the vessel harvests and brings on board more than the landing limit for a groundfish stock of concern specified in § 648.85(b)(10)(iv)(D), other groundfish specified under § 648.86, or monkfish under § 648.94.

(100) If fishing in the Regular B DAS Program specified in § 648.85(b)(10), fail to comply with the requirements and restrictions specified in § 648.85(b)(10)(iv)(A) through (F), (I), and (J).

(101) If fishing in the Regular B DAS Program specified in § 648.85(b)(10), fail to comply with the VMS requirement specified in § 648.85(b)(10)(iv)(A).

(102) If fishing in the Regular B DAS Program specified in § 648.85(b)(10), fail to comply with the observer notification requirement specified in § 648.85(b)(10)(iv)(B).

(103) If fishing in the Regular B DAS Program specified in § 648.85(b)(10), fail to comply with the VMS declaration requirement specified in § 648.85(b)(10)(iv)(C).

(104) If fishing in the Regular B DAS Program specified in § 648.85(b)(10), fail to comply with the landing limits specified in § 648.85(b)(10)(iv)(D).

(105) If fishing in the Regular B DAS Program specified in § 648.85(b)(10), fail to comply with the no discard and DAS flip requirements specified in § 648.85(b)(10)(iv)(E).

(106) If fishing in the Regular B DAS Program specified in § 648.85(b)(10), fail to comply with the minimum Category A DAS and Category B DAS accrual requirements specified in § 648.85(b)(10)(iv)(F).

(107) Use a Regular B DAS in the Regular B DAS Program specified in § 648.85(b)(10), if the program has been closed as specified in § 648.85(b)(10)(iv)(H) or (b)(10)(vi).

(108) If fishing in the Regular B DAS Program specified in § 648.85(b)(10), use a Regular B DAS after the program has closed, as required under § 648.85(b)(10)(iv)(G) or (H).

(109) If fishing in the Regular B DAS Program specified in § 648.85(b)(10), fail to comply with the reporting requirements specified in § 648.85(b)(10)(iv)(I).

(110) If fishing in the CA I Hook Gear Haddock SAP specified in § 648.85(b)(11), fail to comply with the requirements and conditions specified in § 648.85(b)(11)(iv), and (b)(11)(v) or (b)(11)(vi), whichever is applicable.

(111) If fishing in the CA I Hook Gear Haddock Access Area specified in § 648.85(b)(11)(ii), fail to comply with the requirements and conditions specified in § 648.85(b)(11)(iv), and (b)(11)(v) or (b)(11)(vi), whichever is applicable.

(112) Fish in the CA I Hook Gear Haddock SAP specified in § 648.85(b)(11), outside of the season specified in § 648.85(b)(11)(iii).

(113) If fishing in the CA I Hook Gear Haddock SAP specified in § 648.85(b)(11), fail to comply with the DAS use restrictions specified in § 648.85(b)(11)(iv)(A), and (b)(11)(v)(A) or (b)(11)(vi)(A), whichever is applicable.

(114) If fishing in the CA I Hook Gear Haddock SAP specified in § 648.85(b)(11), fail to comply with the VMS requirements specified in § 648.85(b)(11)(iv)(B).

(115) If fishing in the CA I Hook Gear Haddock SAP specified in § 648.85(b)(11), fail to comply with the observer notification requirements specified in § 648.85(b)(11)(iv)(C).

(116) If fishing in the CA I Hook Gear Haddock SAP specified in § 648.85(b)(11), fail to comply with the VMS declaration requirement specified in § 648.85(b)(11)(iv)(D).

(117) If fishing in the CA I Hook Gear Haddock SAP specified in § 648.85(b)(11), fail to comply with the gear restrictions specified in § 648.85(b)(11)(iv)(E), and (b)(11)(v)(B) or (b)(11)(vi)(B), whichever is applicable.

(118) If fishing in the CA I Hook Gear Haddock SAP specified in

§ 648.85(b)(11), fail to comply with the landing limits specified in § 648.85(b)(11)(iv)(H), and (b)(11)(v)(C) or (b)(11)(vi)(C), whichever is applicable.

(119) If fishing in the CA I Hook Gear Haddock SAP specified in § 648.85(b)(11), fail to comply with the reporting requirement specified in § 648.85(b)(11)(v)(D) or (b)(11)(vi)(D), whichever is applicable.

(120) Fish in the CA I Hook Gear Haddock Access Area specified in § 648.85(b)(11)(ii), if that area is closed as specified in § 648.85(b)(11)(iv)(I) or (b)(11)(vi)(F).

(121) If fishing in the CA I Hook Gear Haddock SAP specified in § 648.85(b)(11), fish with squid as bait, as prohibited at § 648.85(b)(11)(iv)(J).

(122) Fish in the Eastern U.S./Canada Haddock SAP specified in § 648.85(b)(8), if the SAP is closed as specified in § 648.85(b)(8)(v)(L) or (N).

(123) If fishing in the Regular B DAS Program specified in § 648.85(b)(10), fail to use a haddock separator trawl as described under § 648.85(a)(3)(iii)(A), or other approved gear as described under § 648.85(b)(10)(iv)(J).

(124) If fishing under a NE multispecies Category A DAS in one or both of the differential DAS areas defined under § 648.82(e)(4)(i), fail to declare into one or both of the areas through VMS, as required under § 648.82(e)(4)(ii).

(125) If fishing under a NE multispecies Category A DAS in one or both of the differential DAS areas defined in § 648.82(e)(4)(i), and under the restrictions of one or more of the Special Management Programs under § 648.85, fail to comply with the most restrictive regulations.

(126) Possess or land more witch flounder than allowed under § 648.86(m).

(127) Retain or land zero retention stocks as specified under § 648.86(n).

(128) If possessing a Ruhle Trawl, either at sea or elsewhere, as allowed under § 648.85(b)(10)(iv)(J)(*1*) or (b)(8)(v)(E)(*1*), fail to comply with the net specifications under § 648.85(b)(10)(iv)(J)(*3*).

(129) If fishing as a private recreational and charter/party vessel in the SNE/MA winter flounder stock area defined in § 648.85(b)(10)(v)(E), fish for or retain winter flounder or transit this area in possession of winter flounder caught outside this area, unless all bait and hooks are removed from fishing rods and any winter flounder on board has been gutted and stored.

(130) If fishing in the Regular B DAS Program specified in § 648.85(b)(10), fail to use a haddock separator trawl as described under § 648.85(a)(3)(ix)(A), or other approved gear as described under § 648.85(b)(10)(iv)(J).

(131) For vessels fishing inside and outside the Eastern U.S./Canada Area on the same trip, fail to comply with the most restrictive regulations that apply on the trip as required under § 648.85(a)(3)(viii)(A).

(132) For vessels fishing inside and outside the Eastern U.S./Canada Area on the same trip, fail to notify NMFS via VMS that the vessel is electing to fish in this manner, as required by § 648.85(a)(3)(viii)(A)(*1*).

(133) Fail to comply with the restrictions on fishing and gear specified in § 648.80(a)(3)(v), (a)(4)(v), (b)(2)(v), and (c)(2)(iv) if the vessel has been issued a limited access NE multispecies permit and fishes with hook-gear in areas specified in § 648.80(a), (b), or (c), unless allowed under § 648.85(b)(11)(iv)(F).

(134) Discard legal-sized NE regulated multispecies, ocean pout, or Atlantic halibut while fishing under a Special Access Program, as described in §§ 648.85(b)(3)(xi), 648.85(b)(11)(iv)(H) or 648.85(b)(8)(v)(I).

* * * * *

(g) * * *

(6) If the vessel is a private recreational fishing vessel, fail to comply with the seasonal GOM cod possession prohibition described in § 648.89(c)(1)(vi), or, if the vessel has been issued a charter/party permit or is fishing under charter/party regulations, fail to comply with the prohibition on fishing under § 648.89(c)(5)(v).

(7) If fishing under the recreational or charter/party regulations, fish for or possess cod caught in the GOM Regulated Mesh Area during the seasonal GOM cod possession prohibition under § 648.89(c)(1)(vi) or (c)(5)(v), or fail to abide by the appropriate restrictions if transiting with cod on board.

* * * * *

§ 648.80 [Amended]

■ 4. In § 648.80, paragraph (i) is suspended.

■ 5. In § 648.81, paragraph (b)(2)(iv)(B) is suspended, and paragraph (b)(2)(iv)(C) is added to read as follows:

§ 648.81 NE multispecies closed areas and measures to protect EFH.

* * * * *

(b) * * *

(2) * * *

(iv) * * *

(C) The vessel has declared into the Eastern U.S./Canada Area as specified in § 648.85(a)(3)(viii) and is transiting CA II in accordance with the provisions of § 648.85(a)(3)(vii).

* * * * *

■ 6. In § 648.82:

■ A. Paragraphs (e)(2) and (3); (j)(1)(iii)(A) through (D); (k)(4)(iv) and (x); and (l)(1)(iv) and (ix) are suspended.

■ B. Paragraphs (e)(4) and (5), and (j)(1)(iii)(E), (F), and (G) are added.

The additions read as follows:

§ 648.82 Effort-control program for NE multispecies limited access vessels.

* * * * *

(e) * * *

(4) *Differential DAS.* For a NE multispecies DAS vessel that intends to fish some or all of its trip, or fishes some or all of its trip other than for transiting purposes, under a Category A DAS in one or both of the differential DAS areas, as defined in paragraphs (e)(4)(i)(A) and (B) of this section, with the exception of Day gillnet vessels, which accrue DAS in accordance with paragraph (j)(1)(iii) of this section, each Category A DAS, or part thereof, shall be counted at the differential DAS rate described in paragraph (e)(4)(iii) of this section, and be subject to the restrictions defined in this paragraph (e).

(i) *Differential DAS Areas.*—(A) *GOM Differential DAS Area.* The GOM Differential DAS Area is defined by straight lines connecting the following points in the order stated:

Point	N. lat.	W. long.
GMD1	43°30′	Intersection with Maine Coastline.
GMD2	43°30′	69°30′.
GMD3	43°00′	69°30′.
GMD4	43°00′	69°55′ eastern boundary, WGOM Closed Area.
GMD5	42°30′	69°55′.
GMD6	42°30′	69°30′.
GMD7	41°30′	69°30′.
GMD8	41°30′	70°00′.
GMD9	North to intersection with Cape Cod, Massachusetts, coast and 70°00″ W.	

(B) *Interim SNE Differential DAS Area.* The Interim SNE Differential DAS Area is defined by straight lines connecting the following points in the order stated (a chart depicting this area is available from the Regional Administrator upon request):

INTERIM SNE DIFFERENTIAL DAS AREA

Point	N. lat.	W. long.
SNECA1	(1)	70°00′
SNECA2	41°30′	70°00′
SNECA3	41°30′	68°50′
SNECA4	40°30′	68°50′
SNECA5	40°30′	(2)

[1] Intersection of the shoreline of Cape Cod, Massachusetts, and 70°00′ W. long.
[2] Intersection of the shoreline of Staten Island, New York, and 40°30′ N. lat.

(ii) *Declaration.* A NE multispecies DAS vessel that intends to fish, or fishes under a Category A DAS in one of the differential DAS areas described in paragraph (e)(4)(i) of this section, must, prior to leaving the dock, declare through the VMS, in accordance with instructions to be provided by the Regional Administrator, that the vessel will fish in the GOM Differential DAS Area, the Interim SNE Differential DAS Area, or both areas. A DAS vessel that fishes in the Eastern U.S./Canada Area and intends to fish, or fishes, subsequently in one or both of the differential DAS areas under a Category A DAS, must declare its intention to do so through its VMS prior to leaving the dock at the start of the trip, or prior to leaving the Eastern U.S./Canada Area, as specified in § 648.85(a)(3)(viii)(A)(*3*).

(iii) *Differential DAS counting.*—(A) *Differential DAS counting when fishing in the GOM Differential DAS Area.* For a NE multispecies vessel that intends to fish, or fishes for some or all of its trip other than for transiting purposes under a Category A DAS in the GOM Differential DAS Area, each Category A DAS, or part thereof, shall be counted at the ratio of 2 to 1 for the entire trip, even if only a portion of the trip is spent fishing in the GOM Differential DAS Area. A vessel that has not declared its intent to fish in the GOM Differential DAS Area and that is not transiting, as specified in paragraph (e)(4)(v) of this section, may be in the GOM Differential DAS Area, provided the vessel's fishing gear is stowed in accordance with the provisions of § 648.23(b) for the entire time the vessel is in the area, and the vessel declares immediately upon entering the GOM Differential DAS Area, via VMS, that it is in the area. A vessel that fishes in both the GOM Differential Area and the Interim SNE Differential DAS Area on the same trip will be charged DAS at the rate of 2:1 for the entire trip.

(B) *Differential DAS counting when fishing in the Interim SNE Differential DAS Area.* With the exception of a vessel fishing with hook gear, a NE multispecies DAS vessel that intends to fish or fishes some or all of its trip other than for transiting purposes under a Category A DAS in the Interim SNE Differential DAS Area shall have each Category A DAS, or part thereof, counted at the ratio of 2 to 1 for the entire trip, even if only a portion of the trip is spent fishing in the Interim SNE Differential DAS Area. Unless otherwise specified in paragraph (e)(4)(iii) of this section, a NE multispecies DAS vessel fishing with hook gear that intends to fish or fishes some or all of its trip other than for transiting purposes under a Category A DAS in the Interim SNE Differential DAS Area shall have each Category A DAS, or part thereof, counted at the ratio of 1 to 1 for the entire trip. A vessel that has not declared its intent to fish in the Interim SNE Differential DAS Area and that is not transiting, as specified in paragraph (e)(4)(v) of this section, may be in the Interim SNE Differential DAS Area, provided the vessel's fishing gear is stowed in accordance with the provisions of § 648.23(b) for the entire time the vessel is in the area and the vessel declares immediately upon entering the Interim SNE Differential DAS Area, via VMS, that it is in the area. A vessel that fishes in both the GOM Differential Area and the Interim SNE Differential DAS Area on the same trip will be charged DAS at the rate of 2:1 for the entire trip.

(iv) *Restrictions.* A NE multispecies vessel fishing under a Category A DAS in one or both of the differential DAS areas defined in paragraph (e)(4)(i) of this section, under the restrictions of this paragraph (e)(4) and under the restrictions of one or more of the Special Management Programs under § 648.85, must comply with the most restrictive DAS counting, trip limits, and reporting requirements, specified in this paragraph (e)(4) and in § 648.85, under the pertinent Special Management Program.

(v) *Transiting.* A vessel may transit either one or both of the differential DAS areas, as defined in paragraph (e)(4)(i) of this section, provided the gear is stowed in accordance with the provisions of § 648.23(b).

(5) *Regular B DAS Program 24-hr clock.* For a vessel electing to fish in the Regular B DAS Program, as specified at § 648.85(b)(10), and that remains fishing under a Regular B DAS for the entire fishing trip (without a DAS flip), DAS used shall accrue at the rate of 1 full DAS for each calendar day, or part of a calendar day fished. For example, a vessel that fished on one calendar day from 6 a.m. to 10 p.m. would be charged 24 hr of Regular B DAS, not 16 hr; a vessel that left on a trip at 11 p.m. on the first calendar day and returned at 10 p.m. on the second calendar day would be charged 48 hr of Regular B DAS instead of 23 hr, because the fishing trip would have spanned 2 calendar days. For the purpose of calculating trip limits specified under § 648.86, the amount of DAS deducted from a vessel's DAS allocation shall determine the amount of fish the vessel can legally land. For a vessel electing to fish in the Regular B DAS Program, as specified at § 648.85(b)(10), while also fishing in one or both of the differential DAS areas defined in paragraph (e)(4) of this section, Category B DAS shall accrue at the rate described in this paragraph (e)(5), unless the vessel flips to a Category A DAS, in which case the vessel is subject to the pertinent DAS accrual restrictions of paragraph (e)(4)(iii) of this section for the entire trip. For vessels electing to fish in both the Regular B DAS Program, as specified in § 648.85(b)(10), and in the Eastern U.S./Canada Area, as specified in § 648.85(a), DAS counting will begin and end according to the DAS accounting rules specified in § 648.10(b)(2)(iii).

* * * * *

(j) * * *

(1) * * *

(iii) * * *

(E) A Day gillnet vessel fishing with gillnet gear that has elected to fish in the Regular B DAS Program, as specified in § 648.85(b)(10), under a Category B DAS, is subject to the DAS accrual provisions of paragraph (e)(5) of this section.

(F) A Day gillnet vessel fishing with gillnet gear under a NE multispecies Category A DAS, when not subject to differential DAS counting as specified under paragraph (e)(4) of this section, shall accrue 15 hr of DAS for each trip of more than 3 hr, but less than or equal to 15 hr. Such vessel shall accrue actual DAS time at sea for trips less than or equal to 3 hr, or more than 15 hr.

(G) A Day gillnet vessel fishing with gillnet gear under a NE multispecies Category A DAS that is fishing in one or both of the differential DAS areas specified in paragraph (e)(4)(i) of this section and, therefore, subject to differential DAS counting as specified under paragraph (e)(4)(iii) of this section, shall accrue DAS at a differential DAS rate of 2 to 1 for the actual hours used for any trip of less than or equal to 3 hr in duration, and for any trip of greater than 7.5 hr. For such vessels fishing on any trip of more than 3 hr, but less than or equal to 7.5 hr duration, vessels will be charged a full 15 hr. For example, a Day gillnet

vessel fishing in the Interim SNE Differential DAS Area for 8 actual hr would be charged 16 hr of DAS, or if fishing for 5 actual hr, would be charged 15 hr of DAS.

* * * * *

■ 7. In § 648.83, paragraph (a)(1) and (a)(3) are suspended and paragraph (a)(4) is added to read as follows:A

§ 648.83 Multispecies minimum fish sizes.

(a) * * *

(4) Minimum fish sizes for recreational vessels and charter/party vessels that are not fishing under a NE multispecies DAS are specified in § 648.89. Except as provided in § 648.17, all other vessels are subject to the following minimum fish sizes, determined by total length (TL):

MINIMUM FISH SIZES (TL) FOR COMMERCIAL VESSELS

Species	Sizes (inches)
Cod	22 (55.9 cm)
Haddock	18 (45.7 cm)
Pollock	19 (48.3 cm)
Witch flounder (gray sole)	14 (35.6 cm)
Yellowtail flounder	13 (33.0 cm)
American plaice	14 (35.6 cm)
Atlantic halibut	36 (91.4 cm)
Winter flounder (blackback)	12 (30.5 cm)
Redfish	9 (22.9 cm)

* * * * *

■ 8. In § 648.85:

■ A. Paragraphs (a)(3)(ii) and (iii); and (a)(3)(v)(A), (B), and (C) are suspended.

■ B. Paragraphs (b)(4), (5), (6) and (7); (b)(8)(v)(E)(*2*); and (b)(8)(v)(H) are suspended.

■ C. Paragraphs (a)(3)(v)(D), (E), and (F); (a)(3)(viii) and (ix); (b)(8)(v)(E)(*3*); (b)(8)(v)(M) and (N); and (b)(9), (10), and (11) are added.

The additions read as follows:

§ 648.85 Special management programs.

* * * * *

(a) * * *

(3) * * *

(v) * * *

(D) Total pounds of cod, haddock, yellowtail flounder, winter flounder, witch flounder, pollock, windowpane flounder, and white hake kept;

(E) Date fish were caught and statistical area in which fish were caught; and

(F) Vessel Trip Report (VTR) serial number, as instructed by the Regional Administrator.

* * * * *

(viii) *Declaration.* To fish in the U.S./Canada Management Area under a groundfish DAS, a NE multispecies DAS vessel, prior to leaving the dock, must declare through the VMS, in accordance with instructions to be provided by the Regional Administrator, which specific U.S./Canada Management Area described in paragraphs (a)(1)(i) or (ii) of this section, or which specific SAP, described in paragraph (b) of this section, within the U.S./Canada Management Area the vessel will fish in, and comply with the restrictions and conditions in paragraphs (a)(3)(viii)(A) through (C) of this section. Vessels other than NE multispecies DAS vessels are not required to declare into the U.S./Canada Management Areas.

(A) A vessel fishing under a NE multispecies DAS in the Eastern U.S./Canada Area may fish both inside and outside of the Eastern U.S./Canada Area on the same trip, provided it complies with the most restrictive DAS counting, trip limits, and reporting requirements for the areas fished for the entire trip, and provided it complies with the restrictions specified in paragraphs (a)(3)(viii)(A)(*1*) through (*4*) of this section. On a trip when the vessel operator elects to fish both inside and outside of the Eastern U.S./Canada Area, all cod, haddock, and yellowtail flounder caught on the trip shall count toward the applicable hard TAC specified for the U.S./Canada Management Area.

(*1*) The vessel operator must notify NMFS via VMS any time prior to leaving the dock at the start of the trip or prior to leaving the Eastern U.S./Canada Area (including at the time of initial declaration into the Eastern U.S./Canada Area) that it is also electing to fish outside the Eastern U.S./Canada Area. With the exception of vessels participating in the Regular B DAS Program and fishing under a Regular B DAS, once a vessel that has elected to fish outside of the Eastern U.S./Canada Area leaves the Eastern U.S./Canada Area, Category A DAS shall accrue from the time the vessel crosses the VMS demarcation line at the start of its fishing trip until the time the vessel crosses the demarcation line on its return to port, in accordance with § 648.10(b)(2)(iii).

(*2*) The vessel must comply with the reporting requirements of the U.S./Canada Management Area specified under paragraph (a)(3)(v) of this section for the duration of the trip.

(*3*) If the vessel fishes or intends to fish in one or both of the differential DAS areas defined under § 648.82(e)(4)(i), it must declare its intent to do so prior to leaving the Eastern U.S./Canada Area (including at the time of initial declaration into the Eastern U.S./Canada Area), and must not have exceeded the CC/GOM or SNE/MA yellowtail flounder trip limits, specified in § 648.86(g), for the respective areas.

(*4*) If a vessel possesses yellowtail flounder in excess of the trip limits for CC/GOM yellowtail flounder or SNE/MA yellowtail flounder, as specified in § 648.86(g), the vessel may not fish in either the CC/GOM or SNE/MA yellowtail flounder stock area during that trip (*i.e.,* may not fish outside of the U.S./Canada Management Area).

(B) A vessel fishing under a NE multispecies DAS in the Western U.S./Canada Area may fish inside and outside the Western U.S./Canada Area on the same trip, provided it complies with the most restrictive regulations applicable to the area fished for the entire trip (*e.g.,* the possession restrictions specified in paragraph (a)(3)(iv)(C)(*4*) of this section), and the reporting requirements specified in paragraph (a)(3)(v) of this section.

(C) For the purposes of selecting vessels for observer deployment, a vessel fishing in either of the U.S./Canada Management Areas specified in paragraph (a)(1) of this section must provide notice to NMFS of the vessel name; contact name for coordination of observer deployment; telephone number for contact; and the date, time, and port of departure, at least 72 hr prior to the beginning of any trip that it declares into the U.S./Canada Management Area, as required under this paragraph (a)(3)(viii).

(ix) *Gear requirements.* NE multispecies vessels fishing with trawl gear in the Eastern U.S./Canada Area defined in paragraph (a)(1)(ii) of this section, unless otherwise provided in paragraphs (b)(8) and (b)(10) of this section, must fish with a Ruhle trawl, as described in paragraph (b)(10)(iv)(J)(*1*) of this section, or a haddock separator trawl or a flounder trawl net, as described in paragraphs (a)(3)(ix)(A) and (B) of this section (all three nets may be onboard the fishing vessel simultaneously). Gear other than the Ruhle trawl, haddock separator trawl, or the flounder trawl net as described in paragraph (a)(3)(ix) of this section, or gear authorized under paragraphs (b)(8) and (b)(10) of this section, may be on board the vessel during a trip to the Eastern U.S./Canada Area, provided the gear is stowed according to the regulations at § 648.23(b). The description of the Ruhle trawl, the haddock separator trawl, and the flounder trawl net in paragraph (b)(10)(iv)(J)(*1*) of this section and in this paragraph (a)(3)(ix) may be further specified by the Regional Administrator through publication of such specifications in the **Federal Register,**

consistent with the requirements of the Administrative Procedure Act.

(A) *Haddock separator trawl.* A haddock separator trawl is defined as a groundfish trawl modified to a vertically oriented trouser trawl configuration, with two extensions arranged one over the other, where a codend shall be attached only to the upper extension, and the bottom extension shall be left open and have no codend attached. A horizontal large-mesh separating panel constructed with a minimum of 6.0-inch (15.2-cm) diamond mesh must be installed between the selvedges joining the upper and lower panels, as described in this paragraph (a)(3)(ix)(A) and in paragraph (B) of this section, extending forward from the front of the trouser junction to the aft edge of the first belly behind the fishing circle.

(*1*) *Two-seam bottom trawl nets.* For two-seam nets, the separator panel will be constructed such that the width of the forward edge of the panel is 80–85 percent of the width of the after edge of the first belly of the net where the panel is attached. For example, if the belly is 200 meshes wide (from selvedge to selvedge), the separator panel must be no wider than 160–170 meshes.

(*2*) *Four-seam bottom trawl nets.* For four-seam nets, the separator panel will be constructed such that the width of the forward edge of the panel is 90–95 percent of the width of the after edge of the first belly of the net where the panel is attached. For example, if the belly is 200 meshes wide (from selvedge to selvedge), the separator panel must be no wider than 180–190 meshes. The separator panel will be attached to both of the side panels of the net along the midpoint of the side panels. For example, if the side panel is 100 meshes tall, the separator panel must be attached at the 50th mesh.

(B) *Flounder trawl net.* A flounder trawl net is defined as bottom trawl gear meeting one of the following two net descriptions:

(*1*) A two-seam, low-rise net constructed with mesh size in compliance with § 648.80(a)(4), where the maximum footrope length is not greater than 105 ft (32.0 m) and the headrope is at least 30-percent longer than the footrope. The footrope and headrope lengths shall be measured from the forward wing end.

(*2*) A two-seam, low-rise net constructed with mesh size in compliance with § 648.80(a)(4), with the exception that the top panel of the net contains a section of mesh at least 10 ft (3.05 m) long and stretching from selvedge to selvedge, composed of at least 12-inch (30.5-cm) mesh that is inserted no farther than 4.5 meshes behind the headrope.

(b) * * *

(8) * * *

(v) * * *

(E) * * *

(*3*) *Approval of additional gear.* The Regional Administrator may authorize additional gear for use in the Eastern U.S./Canada Haddock SAP in accordance with the standards and requirements specified at paragraph (b)(10)(iv)(J)(*2*) of this section.

* * * * *

(M) *Incidental TACs.* The maximum amount of GB cod, and the amount of GB yellowtail flounder, GB winter flounder, and pollock, both landings and discards, that may be caught when fishing in the Eastern U.S./Canada Haddock SAP Program in a fishing year by vessels fishing under a Category B DAS, as authorized in paragraph (b)(8)(v)(A) of this section, is the amount specified in paragraphs (b)(9)(ii), (iii), and (iv) of this section, respectively.

(N) *Mandatory closure of Eastern U.S./Canada Haddock SAP.* When the Regional Administrator projects that one or more of the TAC allocations specified in paragraph (b)(8)(v)(M) of this section has been caught by vessels fishing under Category B DAS, NMFS shall prohibit the use of Category B DAS in the Eastern U.S./Canada Haddock SAP, through publication in the **Federal Register** consistent with the Administrative Procedure Act. In addition, the closure regulations described in paragraph (a)(3)(iv)(E) of this section shall apply to the Eastern U.S./Canada Haddock SAP Program.

(9) *Incidental Catch TACs.* Unless otherwise specified in this paragraph (b)(9), Incidental Catch TACs shall be specified through the periodic adjustment process described in § 648.90, and allocated as described in this paragraph (b)(9), for each of the following stocks: GOM cod, GB cod, GB yellowtail flounder, GB winter flounder, GOM winter, white hake, CC/GOM yellowtail flounder, SNE/MA yellowtail flounder, witch flounder, and pollock. NMFS shall send letters to limited access NE multispecies permit holders notifying them of such TACs.

(i) *Stocks other than GB cod, GB yellowtail flounder, GB winter flounder, and pollock.* With the exception of GB cod, GB yellowtail flounder, GB winter flounder, and pollock, the Incidental Catch TACs specified under this paragraph (b)(9) shall be allocated to the Regular B DAS Program described in paragraph (b)(10) of this section.

(ii) *GB cod.* The Incidental TAC for GB cod specified under this paragraph (b)(9) shall be subdivided as follows: 70 percent to the Regular B DAS Program described in paragraph (b)(10) of this section; 16 percent to the CA I Hook Gear Haddock SAP described in paragraph (b)(7) of this section; and 14 percent to the Eastern U.S./Canada Haddock SAP described in paragraph (b)(8) of this section.

(iii) *GB yellowtail flounder and GB winter flounder.* Each of the Incidental Catch TACs for GB yellowtail flounder and GB winter flounder specified under this paragraph (b)(9) shall be subdivided as follows: 80 percent to the Regular B DAS Program described in paragraph (b)(10) of this section; and 20 percent to the Eastern U.S./Canada Haddock SAP described in paragraph (b)(8) of this section.

(iv) *Pollock.* The Incidental TAC for pollock specified under this paragraph (b)(9) shall be subdivided as follows: 90 percent to the Regular B DAS Program described in paragraph (b)(10) of this section; 5 percent to the CA I Hook Gear Haddock SAP described in paragraph (b)(7) of this section; and 5 percent to the Eastern U.S./Canada Haddock SAP described in paragraph (b)(8) of this section.

(10) *Regular B DAS Program.*—(i) *Eligibility.* Vessels issued a valid limited access NE multispecies DAS permit and allocated Regular B DAS are eligible to participate in the Regular B DAS Program and may elect to fish under a Regular B DAS, provided they comply with the requirements and restrictions of this paragraph (b)(10), and provided the use of Regular B DAS is not restricted according to paragraphs (b)(10)(iv)(G) or (H) of this section, or paragraph (b)(10)(vi) of this section. Vessels are required to comply with the no discarding and DAS flip requirements specified in paragraph (b)(10)(iv)(E) of this section and the DAS balance and accrual requirements specified in paragraph (b)(10)(iv)(F) of this section. Vessels may fish under the B Regular DAS Program and in the U.S./Canada Management Area on the same trip, but may not fish under the Regular B DAS Program and in a SAP on the same trip.

(ii) [Reserved]

(iii) *Quarterly Incidental Catch TACs.* The Incidental Catch TACs specified in accordance with paragraph (b)(9) of this section shall be divided into quarterly catch TACs as follows: The first quarter shall received 13 percent of the Incidental Catch TACs and the remaining three quarters shall each receive 29 percent of the Incidental Catch TACs. When the Regional Administrator projects that there is uncaught TAC in quarters one, two, or

three, the uncaught TAC will be added to the TAC allocated for the subsequent quarter. Uncaught TAC at the end of the fishing year will not be added to allocations in subsequent fishing years. NMFS shall send letters to all limited access NE multispecies permit holders notifying them of such TACs and any adjustments to such TACs.

(iv) *Program requirements.*—(A) *VMS requirement.* A NE multispecies DAS vessel fishing in the Regular B DAS Program described in paragraph (b)(10)(i) of this section must have installed on board an operational VMS unit that meets the minimum performance criteria specified in §§ 648.9 and 648.10.

(B) *Observer notification.* For the purposes of selecting vessels for observer deployment, a vessel must provide notice to NMFS of the vessel name; contact name for coordination of observer deployment; telephone number for contact; the date, time, and port of departure; and the planned fishing area or areas (GOM, GB, or SNE/MA) at least 72 hr prior to the beginning of any trip that it declares into the Regular B DAS Program, as required under paragraph (b)(10)(iv)(C) of this section, and in accordance with instructions provided by the Regional Administrator. Providing notice of the area that the vessel intends to fish does not restrict the vessel's activity to only that area on that trip (i.e., the vessel operator may change his/her plans regarding planned fishing area).

(C) *VMS declaration.* To participate in the Regular B DAS Program under a Regular B DAS, a vessel must declare into the Program via VMS prior to departure from port, in accordance with instructions provided by the Regional Administrator. A vessel declared into the Regular B DAS Program cannot fish in an approved SAP described under this section on the same trip. Mere declaration of a Regular B DAS Program trip does not reserve a vessel's right to fish under the Program, if the vessel has not crossed the VMS demarcation line.

(D) *Landing limits.* Unless otherwise specified in this paragraph (b)(10)(iv)(D), a NE multispecies vessel fishing in the Regular B DAS Program described in this paragraph (b)(10), and fishing under a Regular B DAS, may not land more than 100 lb (45.5 kg) per DAS, or any part of a DAS, up to a maximum of 1,000 lb (454 kg) per trip of any of the following species/stocks from the areas specified in paragraph (b)(10)(v) of this section: Cod, pollock, white hake, witch flounder, GB winter flounder, GB yellowtail flounder, and southern windowpane flounder; and may not land more than 25 lb (11.3 kg) per DAS, or any part of a DAS, up to a maximum of 250 lb (113 kg) per trip of CC/GOM or SNE/MA yellowtail flounder. In addition, trawl vessels that are required to fish with a haddock separator trawl or Ruhle trawl, as specified under paragraph (b)(10)(iv)(J) of this section, and other gear that may be required in order to reduce catches of stocks of concern as described under paragraph (b)(10)(iv)(J) of this section, are restricted to the following trip limits: 500 lb (227 kg) of all flatfish species (American plaice, witch flounder, winter flounder (GOM or GB), windowpane flounder (south), and yellowtail flounder), combined; 500 lb (227 kg) of monkfish (whole weight); 500 lb (227 kg) of skates (whole weight); and zero possession of lobsters, ocean pout, SNE/MA winter flounder, and windowpane flounder (north), unless otherwise restricted by § 648.94(b)(3).

(E) *No-discard provision and DAS flips.* A vessel fishing in the Regular B DAS Program under a Regular B DAS may not discard legal-sized regulated species, Atlantic halibut, or monkfish, unless otherwise specified in this paragraph (b)(10)(iv)(E). This prohibition on discarding does not apply to ocean pout, windowpane (north), or SNE winter flounder, or in areas or times where the possession or landing of regulated species is prohibited. If such a vessel harvests and brings on board legal-sized regulated NE multispecies, or Atlantic halibut unless exempted, as specified in this paragraph (b)(10)(iv)(E), in excess of the allowable landing limits specified in paragraph (b)(10)(iv)(D) of this section, or § 648.86, the vessel operator must notify NMFS immediately via VMS to initiate a DAS flip from a B DAS to an A DAS. Once this notification has been received by NMFS, the vessel shall automatically be switched by NMFS to fishing under a Category A DAS for its entire fishing trip. Thus, any Category B DAS that accrued between the time the vessel declared into the Regular B DAS Program at the beginning of the trip (i.e., at the time the vessel crossed the demarcation line at the beginning of the trip) and the time the vessel declared its DAS flip shall be accrued as Category A DAS, and not Regular B DAS. After flipping to a Category A DAS, the vessel is subject to the applicable trip limits specified under § 648.86 or paragraph (a) of this section and may discard fish in excess of the applicable trip limits.

(F) *Minimum Category A DAS and B DAS accrual.* For a vessel fishing under the Regular B DAS Program, the number of Regular B DAS that may be used on a trip cannot exceed the number of Category A DAS that the vessel has at the start of the trip. If a vessel is fishing any part of a trip in one or both of the differential DAS areas, as described in § 648.82(e)(4)(i), the number of Regular B DAS that may be used on a trip cannot exceed the number of Category A DAS that the vessel has at the start of the trip divided by two. For example, if a vessel plans a trip under the Regular B DAS Program into the Interim SNE Differential DAS Area and has 10 Category A DAS available at the start of the trip, the maximum number of Regular B DAS that the vessel may fish under the Regular B DAS Program is 5. A vessel fishing in the Regular B DAS Program for its entire trip shall accrue DAS in accordance with § 648.82(e)(5).

(G) *Restrictions when 100 percent of the incidental catch TAC is harvested.* With the exception of white hake, witch flounder, and pollock, when the Regional Administrator provides notification through methods consistent with the Administrative Procedure Act that 100 percent of one or more of quarterly incidental TACs specified under paragraph (b)(10)(iii) of this section have been projected to have been harvested, the use of Regular B DAS shall be prohibited in the pertinent stock area(s) as defined under paragraph (b)(10)(v) of this section for the duration of the calendar quarter. The closure of a stock area to all Regular B DAS use shall occur even if the quarterly incidental catch TACs for other stocks in that stock area have not been completely harvested. When the Regional Administrator projects that 100 percent of the quarterly white hake, witch flounder, or pollock incidental catch TAC specified under paragraph (b)(10)(iii) of this section has been harvested, vessels fishing under a Regular B DAS, or that complete a trip under a Regular B DAS, shall be prohibited from retaining white hake, witch flounder, or pollock, respectively.

(H) *Closure of Regular B DAS Program and quarterly DAS limits.* Unless otherwise closed as a result of the harvest of an Incidental Catch TAC as described in paragraph (b)(10)(iv)(G) of this section, or as a result of an action by the Regional Administrator under paragraph (b)(10)(vi) of this section, the use of Regular B DAS shall, in a manner consistent with the Administrative Procedure Act, be prohibited when 500 Regular B DAS have been used during the first quarter of the fishing year (May–July), or when 1,000 Regular B DAS have been used during any of the remaining quarters of the fishing year, in accordance with § 648.82(e)(5).

(I) *Reporting requirements.* The owner or operator of a NE multispecies DAS vessel must submit catch reports via

VMS in accordance with instructions provided by the Regional Administrator, for each day fished when declared into the Regular B DAS Program. The reports must be submitted in 24-hr intervals for each day, beginning at 0000 hr and ending at 2400 hr. The reports must be submitted by 0900 hr of the following day. For vessels that have declared into the Regular B DAS Program in accordance with paragraph (b)(10)(iv)(C) of this section, the reports must include at least the following information: Statistical area fished; total pounds of cod, haddock, yellowtail flounder, winter flounder, witch flounder, pollock, and white hake kept; date fish were caught; and VTR serial number, as instructed by the Regional Administrator. Daily reporting must continue even if the vessel operator is required to flip, as described under paragraph (b)(10)(iv)(E) of this section.

(J) *Gear requirement.*—(*1*) Vessels fishing with trawl gear in the Regular B DAS Program must use a haddock separator trawl or Ruhle trawl, as described under paragraphs (a)(3)(iii)(A) and (b)(10)(iv)(J)(*3*) of this section, respectively, or other type of gear, if approved, as described under this paragraph (b)(10)(iv)(J). Other gear may be on board the vessel, provided it is stowed when the vessel is fishing under the Regular B DAS Program. Vessels fishing with gillnet gear in the Regular B DAS Program may not use a low profile (''tie-down'' type) gillnet.

(*2*) *Approval of additional gear.* At the request of the Council or Council's Executive Committee, the Regional Administrator may authorize additional gear for use in the Regular B DAS Program, through notice consistent with the Administrative Procedure Act. The proposed gear must satisfy standards specified in paragraphs (b)(10)(iv)(J)(*2*)(*i*) or (*ii*) of this section in a completed experiment that has been reviewed according to the standards established by the Council's research policy before the gear can be considered and approved by the Regional Administrator. Comparisons of the criteria specified in this paragraph (b)(10)(iv)(J)(*2*) will be made to an appropriately selected control gear.

(*i*) The gear must show a statistically significant reduction in catch of at least 50 percent (by weight, on a trip-by-trip basis) of each regulated species stock of concern, unless otherwise allowed in this paragraph (b)(10)(iv)(J)(*2*)(*i*), or other non-groundfish stocks that are overfished or subject to overfishing identified by the Council. This requirement does not apply to regulated species identified by the Council as not being subject to gear performance standards; or

(*ii*) The catch of each regulated species stock of concern, unless otherwise allowed in this paragraph (b)(10)(iv)(J)(*2*)(*ii*), or other non-groundfish stocks that are overfished or subject to overfishing identified by the Council, must be less than 5 percent of the total catch of regulated groundfish by weight, on a trip-by-trip basis. This requirement does not apply to regulated species identified by the Council as not being subject to gear performance standards.

(*3*) *Ruhle Trawl.* The Ruhle Trawl is a four-seam bottom groundfish trawl designed to reduce the bycatch of cod while retaining or increasing the catch of haddock, when compared to traditional groundfish trawls. A Ruhle Trawl must be constructed in accordance with the standards described and referenced in this paragraph (b)(10)(iv)(J)(*3*). The mesh size of a particular section of the Ruhle Trawl is measured in accordance with § 648.80(f)(2), unless insufficient numbers of mesh exist, in which case the maximum total number of meshes in the section will be measured (between 2 and 20 meshes).

(*i*) The net must be constructed with four seams (i.e., a net with a top and bottom panel and two side panels), and include at least the following net sections as depicted in Figure 1 of this part A ''Nomenclature for 4-seam Ruhle Trawl'' (this figure is also available from the Regional Administrator): Top jib, bottom jib, jib side panels (x 2), top wing, bottom wing, wing side panels (x 2), square, bunt, square side panels (x 2), first top belly, first bottom belly, first belly side panels (x 2), second top belly, second bottom belly, second belly side panels (x 2), and third bottom belly.

(*ii*) The first bottom belly, bunt, the top and bottom wings, and the top and bottom jibs, jib side panels, and wing side panels (the first bottom belly and all portions of the net in front of the first bottom belly, with the exception of the square and the square side panels) must be at least two meshes long in the fore and aft direction. For these net sections, the stretched length of any single mesh must be at least 7.9 ft (240 cm), measured in a straight line from knot to knot.

(*iii*) Mesh size in all other sections must be consistent with mesh size requirements specified under § 648.80 and meet the following minimum specifications: Each mesh in the square, square side panels, and second bottom belly must be 31.5 inches (80 cm); each mesh in the first and second top belly, the first belly side panels, and the third bottom belly must be at least 7.9 inches (20 cm); and 6 inches (15.24 cm) or larger in sections following the second top belly and third bottom belly sections, all the way to the codend. The mesh size requirements of the top sections apply to the side panel sections.

(*iv*) The trawl must have a fishing circle of at least 398 ft (121.4 m). This number is calculated by separately counting the number of meshes for each section of the net at the wide, fore end of the first bottom belly, and then calculating a stretched length as follows: For each section of the net (first bottom belly, two belly side panels and first top belly) multiply the number of meshes times the length of each stretched mesh to get the stretched mesh length for that section, and then add the sections together. For example, if the wide, fore end of the bottom belly of the Ruhle Trawl is 22 meshes (and the mesh is at least 7.9 ft (240 cm)), the stretched mesh length for that section of the net is derived by multiplying 22 times 7.9 ft (240 cm) and equals 173.2 ft (52.8 m). The top and sides (x 2) of the net at this point in the trawl are 343 meshes (221 + 61 + 61, respectively) (each 7.9 inches (20 cm)), which equals 225.1 ft (68.6 m) stretched length. The stretched lengths for the different sections of mesh are added together (173.2 ft + 225.1 ft (52.8 m + 68.6 m)) and result in the length of the fishing circle, in this case 398.3 ft (121.4 m).

(*v*) The trawl must have a single or multiple kite panels with a total surface area of at least 29.1 sq. ft. (2.7 sq. m) on the forward end of the square to help maximize headrope height, for the purpose of capturing rising fish. A kite panel is a flat structure, usually semi-flexible used to modify the shape of trawl and mesh openings by providing lift when a trawl is moving through the water.

(*vi*) The sweep must include rockhoppers of various sizes, which are arranged along the sweep in size order, graduated from 16-inch (40-cm) diameter in the sweep center down to 12-inch (30-cm) diameter at the wing ends. There must be six or fewer 12- to 16-inch (30- to 40-cm) rockhopper discs over any 10-ft (3.0-m) length of the sweep. The 12- to 16- inch (30- to 40-cm) discs (minimum size) must be spaced evenly, with one disc placed approximately every 2 ft (60 cm) along the sweep. The 12- to 16-inch (30- to 40-cm) discs must be separated by smaller discs, no larger than 3.5 inches (8.8 cm) in diameter.

(v) *Definition of incidental TAC stock areas.* For the purposes of the Regular B DAS Program, including the stocks

that may not be retained by vessels as specified under § 648.86, the species stock areas are defined in paragraphs (b)(10)(v)(A) through (I) of this section. Copies of a chart depicting these areas are available from the Regional Administrator upon request.

(A) *GOM cod stock area.* The GOM cod stock area for the purposes of the Regular B DAS Program is the area defined by straight lines connecting the following points in the order stated:

GULF OF MAINE COD STOCK AREA

Point	N. lat.	W. long.
GOM1	(1)	70°00′
GOM2	42°20′	70°00′
GOM3	42°20′	67°40′
GOM4	43°50′	67°40′
GOM5	43°50′	66°50′
GOM6	44°20′	66°50′
GOM7	44°20′	67°00′
GOM8	(2)	67°00′

1 Intersection of the north-facing coastline of Cape Cod, MA, and 70°00′ W. Long.
2 Intersection of the south-facing Maine coastline and 67°00′ W. Long.

(B) *GB cod stock area.* The GB cod stock area for the purposes of the Regular B DAS Program is the area defined by straight lines connecting the following points in the order stated:

GEORGES BANK COD STOCK AREA

Point	N. lat.	W. long.
GB1	(1)	70°00′
GB2	42°20′	70°00′
GB3	42°20′	66°00′
GB4	42°10′	66°00′
GB5	42°10′	65°50′
GB6	42°00′	65°50′
GB7	42°00′	65°40′
GB8	40°30′	65°40′
GB9	39°00′	65°40′
GB10	39°00′	70°00′
GB11	35°00′	70°00′
GB12	35°00′	(2)

1 Intersection of the north-facing coastline of Cape Cod, MA, and 70°00′ W. Long.
2 Intersection of the east-facing coastline of Outer Banks, NC, and 35°00′ N. Lat.

(C) *CC/GOM yellowtail flounder stock area.* The CC/GOM yellowtail flounder stock area for the purposes of the Regular B DAS Program is the area defined by straight lines connecting the following points in the order stated:

CC/GOM YELLOWTAIL FLOUNDER STOCK AREA

Point	N. lat.	W. long.
CCGOM1	43°00′	(1)
CCGOM 2	42°20′	70°00′
CCGOM 3	42°20′	66°00′
CCGOM 4	42°10′	66°00′

CC/GOM YELLOWTAIL FLOUNDER STOCK AREA—Continued

Point	N. lat.	W. long.
CCGOM 5	42°10′	65°50′
CCGOM 6	42°00′	65°50′
CCGOM 7	42°00′	65°40′
CCGOM 8	40°30′	65°40′
CCGOM 9	39°00′	65°40′
CCGOM 10	(2)	.....
CCGOM 11	35°00′	(3)
CCGOM 12	35°00′	(4)
CCGOM 13	(3)	.....

1 Intersection with the New Hampshire coastline.
2 Intersection of the south-facing shoreline of Cape Cod, MA.
3 Intersection with the east-facing shoreline of Cape Cod, MA.
4 Intersection with the west-facing shoreline of Massachusetts.

(D) *SNE/MA yellowtail flounder stock area.* The SNE/MA stock area for the purposes of the Regular B DAS Program is the area bounded on the north, east, and south by straight lines connecting the following points in the order stated:

SNE/MA YELLOWTAIL FLOUNDER STOCK AREA

Point	N. lat.	W. long.
SNEMA1	40°00′	74°00′
SNEMA2	40°00′	72°00′
SNEMA3	40°30′	72°00′
SNEMA4	40°30′	69°30′
SNEMA5	41°00′	69°30′
SNEMA6	41°00′	69°00′
SNEMA7	41°30′	70°00′
SNEMA8	39°00′	70°00′
SNEMA9	41°00′	70°00′
SNEMA10	41°00′	70°30′
SNEMA11	41°30′	70°30′
SNEMA12	(1)	72°00′
SNEMA13	(2)	72°00′
SNEMA14	(3)	73°00′
SNEMA15	40°30′	73°00′
SNEMA16	40°30′	74°00′
SNEMA17	40°00′	74°00′

1 South-facing shoreline of Connecticut.
2 North-facing shoreline of Long Island, New York.
3 South-facing shoreline of Long Island, New York.

(E) *SNE/MA winter flounder stock area.* The SNE winter flounder stock area, for the purposes of the Regular B DAS Program and the prohibition on retention of winter flounder specified under § 648.86, is the area defined by straight lines connecting the following points in the order stated:

SOUTHERN NEW ENGLAND/MID-ATLANTIC WINTER FLOUNDER STOCK AREA

Point	N. lat.	W. long.
SNEW1	(1)	70°00′
SNEW2	42°20′	70°00′

SOUTHERN NEW ENGLAND/MID-ATLANTIC WINTER FLOUNDER STOCK AREA—Continued

Point	N. lat.	W. long.
SNEW3	42°20′	68°50′
SNEW4	39°50′	68°50′
SNEW5	39°50′	71°40′
SNEW6	39°00′	71°40′
SNEW7	39°00′	70°00′
SNEW8	35°00′	70°00′
SNEW9	35°00′	(2)

1 Intersection of the north-facing Coastline of Cape Cod, MA, and 70°00′ W. Long.
2 The intersection of the east-facing coastline of Outer Banks, NC, and 35°00′ N. Lat.

(F) *Windowpane flounder northern stock area.* The windowpane flounder northern stock area, for the purposes of prohibition on retention of northern windowpane flounder specified under § 648.86, is the area defined by straight lines connecting the following points in the order stated:

WINDOWPANE FLOUNDER NORTHERN STOCK AREA

Point	N. lat.	W. long.
G12	(1)	70°00′
WIN1	41°20′	70°00′
WIN2	41°20′	69°50′
WIN3	41°10′	69°50′
WIN4	41°10′	69°30′
WIN5	41°00′	69°30′
WIN6	41°00′	68°50′
WIN7	39°50′	68°50′
WIN8	39°50′	69°00′
WIN9	39°00′	69°00′
WIN10	39°00′	(2)

1 South-facing coastline of Cape Cod, MA.
2 Intersection of 39°00′ N. Lat. and the boundary of the EEZ.

(G) *GB yellowtail flounder stock area.* The GB yellowtail flounder stock area, for the purposes of the Regular B DAS Program, is the area defined as the U.S./Canada Management Areas, as specified in paragraphs (a)(1)(i) and (ii) of this section.

(H) *GB winter flounder stock area.* The GB winter flounder stock area, for the purposes of the Regular B DAS Program, is the area defined as the U.S./Canada Management Areas, as specified in paragraphs (a)(1)(i) and (ii) of this section.

(I) *GOM winter flounder stock area.* The GOM winter flounder stock area, for the purposes of the Regular B DAS Program, is the area defined by straight lines connecting the following points in the order stated:

GOM WINTER FLOUNDER STOCK AREA

Point	N. lat.	W. long.
GOM1	(1)	70°00′
GOM2	42°20′	70°00′
GOM3	42°20′	67°40′
GOM4	43°50′	67°40′
GOM5	43°50′	66°50′
GOM6	44°20′	66°50′
GOM7	44°20′	67°00′
GOM8	(2)	67°00′

[1] Intersection of the north-facing coastline of Cape Cod, MA, and 70°00′ W. Long.

[2] Intersection of the south-facing Maine coastline and 67°00′ W. Long.

(vi) *Closure and in-season modification to the Regular B DAS Program.* The Regional Administrator, based upon information required under §§ 648.7, 648.9, 648.10, or this paragraph (b)(10)(vi), and any other relevant information, in a manner consistent with the Administrative Procedure Act, may prohibit the use of Regular B DAS, modify possession restrictions, or implement other measures, including a partial closure for the Regular B DAS Program, for the duration of a quarter or fishing year, if it is projected that continuation of the Regular B DAS Program would undermine the achievement of the objectives of the FMP or Regular B DAS Program. Reasons for modification or termination of the program include, but are not limited to, the following: Inability to constrain catches to the Incidental Catch TACs; evidence of excessive discarding; a significant difference in flipping rates between observed and unobserved trips; or insufficient observer coverage to adequately monitor the program.

(11) *CA I Hook Gear Haddock SAP.*—(i) *Eligibility.* Vessels issued a valid limited access NE multispecies DAS permit are eligible to participate in the CA I Hook Gear Haddock SAP, and may fish in the CA I Hook Gear Haddock Access Area, as described in paragraph (b)(11)(ii) of this section, for the season specified in paragraph (b)(11)(iii) of this section, provided such vessels comply with the requirements of this section, and provided the SAP is not closed according to the provisions specified under paragraph (b)(11)(iv)(I) or (b)(11)(vi)(F) of this section. Copies of a chart depicting this area are available from the Regional Administrator upon request.

(ii) *CA I Hook Gear Haddock Access Area.* The CA I Hook Gear Haddock Access Area is the area defined by straight lines connecting the following points in the order stated:

CA I HOOK GEAR HADDOCK ACCESS AREA

Point	N. lat.	W. long.
Hook 1	41°09′	68°30′
CI4	41°30′	68°30′
CI1	41°30′	69°23′
Hook 2	41°04′	69°01′

(iii) *Season.* The overall season for the CA I Hook Gear Haddock SAP is May 1 through January 31.

(iv) *General program restrictions.* General program restrictions specified in this paragraph (b)(11)(iv) apply to all eligible vessels as specified in paragraph (b)(11)(i) of this section. Further program restrictions specific to Sector and non-Sector vessels are specified in paragraphs (b)(11)(v) and (vi) of this section.

(A) *DAS use restrictions.* A vessel fishing in the CA I Hook Gear Haddock SAP may not initiate a DAS flip. A vessel is prohibited from fishing in the CA I Hook Gear Haddock SAP while making a trip under the Regular B DAS Pilot Program described under paragraph (b)(10) of this section. DAS will be charged as described in § 648.10.

(B) *VMS requirement.* An eligible NE multispecies DAS vessel fishing in the CA I Hook Gear Haddock SAP specified in this paragraph (b)(11) must have installed on board an operational VMS unit that meets the minimum performance criteria specified in §§ 648.9 and 648.10.

(C) *Observer notifications.* For the purpose of selecting vessels for observer deployment, a vessel must provide notice to NMFS of the vessel name; contact name for coordination of observer deployment; telephone number for contact; and date, time, and port of departure at least 72 hr prior to the beginning of any trip that it declares into the CA I Hook Gear Haddock SAP, as required in paragraph (b)(11)(iv)(D) of this section, and in accordance with instructions provided by the Regional Administrator.

(D) *VMS declaration.* Prior to departure from port, a vessel intending to participate in the CA I Hook Gear Haddock SAP must declare into the SAP via VMS, and indicate the type of DAS that it intends to fish. A vessel declared into the CA I Hook Gear Haddock SAP may fish only on a declared trip in the CA I Hook Gear Haddock Special Access Area described under paragraph (b)(11)(ii) of this section.

(E) *Gear restrictions.* A vessel declared into and fishing in the CA I Hook Gear Haddock SAP may fish with and possess on board demersal longline gear or tub trawl gear only, unless further restricted as specified under paragraph (b)(11)(v)(B) of this section.

(F) *Haddock TAC.*—(*1*) *Allocation and distribution.* The maximum total amount of haddock that may be caught (landings and discards) in the CA I Hook Gear SAP Area in any fishing year is based upon the size of the TAC allocated for the 2004 fishing year (1,130 mt live weight), adjusted according to the growth or decline of the western GB (WGB) haddock exploitable biomass (in relationship to its size in 2004), according to the following formula: BiomassYEAR X = (1,130 mt live weight) × (Projected WGB Haddock ExploitableBiomassYEAR X/WGB Haddock Exploitable Biomass2004). The size of the western component of the stock is considered to be 35 percent of the total stock size, unless modified by a stock assessment. The Regional Administrator shall specify the haddock TAC for the SAP, in a manner consistent with applicable law.

(*2*) [*Reserved*]

(G) *Trip restrictions.* A vessel is prohibited from deploying fishing gear outside of the CA I Hook Gear Haddock SAP Area on the same fishing trip on which it is declared into the CA I Hook Gear Haddock SAP, and must exit the SAP if the vessel exceeds the applicable landing limits described in paragraph (b)(11)(iv)(H) of this section.

(H) *Landing limits.* For all eligible vessels declared into the CA I Hook Gear Haddock SAP described in paragraph (b)(11)(i) of this section, landing limits for NE multispecies other than cod, which are specified at paragraphs (b)(11)(v)(C) and (b)(11)(vi)(C) of this section, are as specified at § 648.86. Unless otherwise specified in this part, such vessels are prohibited from discarding legal-sized regulated NE multispecies, Atlantic halibut, and ocean pout, and must exit the SAP and cease fishing if any trip limit is achieved or exceeded.

(I) *Mandatory closure of CA I Hook Gear Haddock Access Area.* When the Regional Administrator determines that the haddock TAC specified in paragraph (b)(11)(iv)(F) of this section has been caught, NMFS shall close, through rulemaking consistent with the Administrative Procedure Act, the CA I Hook Gear Haddock SAP Area as specified in paragraph (b)(11)(ii) of this section, to all eligible vessels.

(J) *Bait restriction.* A vessel declared into and fishing in the CA I Hook Gear Haddock SAP is prohibited from using squid as bait when participating in the CA I Hook Gear Haddock SAP.

(v) *Sector vessel program restrictions.* In addition to the general program restrictions specified at paragraph

(b)(11)(iv) of this section, the restrictions specified in this paragraph (b)(11)(v) apply only to Sector vessels declared into the CA I Hook Gear Haddock SAP.

(A) *DAS use restrictions.* Sector vessels fishing in the CA I Hook Gear Haddock SAP may use Category A, Regular B, or Reserve B DAS, in accordance with § 648.82(d).

(B) *Gear restrictions.* A vessel enrolled in the Sector is subject to the gear requirements of the Sector Operations Plan as approved under § 648.87(d).

(C) *Landing limits.* A Sector vessel declared into the CA I Hook Gear Haddock SAP described in paragraph (b)(11)(i) of this section is subject to the cod landing limit in effect under the Sector's Operations Plan as approved under § 648.87(d).

(D) *Reporting requirements.* The owner or operator of a Sector vessel declared into the CA I Hook Gear Haddock SAP must submit reports to the Sector Manager, with instructions to be provided by the Sector Manager, for each day fished in the CA I Hook Gear Haddock SAP Area. The Sector Manager shall provide daily reports to NMFS, including at least the following information: Total pounds of haddock, cod, yellowtail flounder, winter flounder, witch flounder, pollock, and white hake kept; total pounds of haddock, cod, yellowtail flounder, winter flounder, witch flounder, pollock, and white hake discarded; date fish were caught; and VTR serial number, as instructed by the Regional Administrator. Daily reporting must continue even if the vessel operator is required to exit the SAP as required under paragraph (b)(11)(iv)(F) of this section.

(E) *GB cod incidental catch TAC.* There is no GB cod incidental catch TAC specified for Sector vessels declared into the CA I Hook Gear Haddock SAP. All cod caught by Sector vessels fishing in the SAP count toward the Sector's annual GB cod TAC, specified in § 648.87(d)(1)(iii).

(vi) *Non-Sector vessel program restrictions.* In addition to the general program restrictions specified in paragraph (b)(11)(iv) of this section, the restrictions specified in this paragraph (b)(11)(vi) apply only to non-Sector vessels declared into the CA I Hook Gear Haddock SAP.

(A) *DAS use restrictions.* Non-Sector vessels fishing in the CA I Hook Gear Haddock SAP may use Regular B or Reserve B DAS, in accordance with § 648.82(d)(2)(i)(A) and (d)(2)(ii)(A). A non-Sector vessel is prohibited from using A DAS when declared into the SAP.

(B) *Gear restrictions.* A non-Sector vessel declared into the CA I Hook Gear Haddock SAP is exempt from the maximum number of hooks restriction specified in § 648.80(a)(4)(v).

(C) *Landing limits.* A non-Sector vessel declared into the CA I Hook Gear Haddock SAP described in paragraph (b)(11)(i) of this section may not land, fish for, or possess on board more than 1,000 lb (453.6 kg) of cod per trip. A non-Sector vessel is not permitted to discard legal-sized cod prior to reaching the landing limit, and is required to end its trip if the cod trip limit is achieved or exceeded.

(D) *VMS declaration.* Prior to departure from port, a vessel intending to participate in the CA I Hook Gear Haddock SAP must declare into the SAP via VMS, and indicate the type of DAS that it intends to fish. A vessel declared into the CA I Hook Gear Haddock SAP may fish only on a declared trip in the CA I Hook Gear Haddock Special Access Area described under paragraph (b)(11)(ii) of this section.

(E) *Incidental catch TACs.* The maximum amount of GB cod and pollock (landings and discards) that may be cumulatively caught by non-Sector vessels from the CA I Hook Gear Haddock Access Area in a fishing year is the amount specified under paragraphs (b)(9)(ii) and (iv) of this section, respectively.

(F) *Mandatory closure of CA I Hook Gear Haddock Access Area due to catch of any incidental catch TAC.* When the Regional Administrator determines that either the GB cod or pollock incidental catch TAC specified in paragraph (b)(11)(vi)(E) of this section has been caught, NMFS shall close, through rulemaking consistent with the Administrative Procedure Act, the CA I Hook Gear Haddock Access Area to all non-Sector fishing vessels.

* * * * *

■ 9. In § 648.86, paragraph (b) is suspended; and paragraphs (l), (m), and (n) are added to read as follows:

§ 648.86 NE multispecies possession restrictions

* * * * *

(l) *Cod.*—(1) *GOM cod landing limit.* (i) Except as provided in paragraphs (l)(1)(ii) and (l)(4) of this section, or unless otherwise restricted under § 648.85, a vessel fishing under a NE multispecies DAS may land only up to 800 lb (362.9 kg) of cod during the first 24-hr period after the vessel has started a trip on which cod were landed (e.g., a vessel that starts a trip at 6 a.m. may call out of the DAS program at 11 a.m. and land up to 800 lb (362.9 kg), but the vessel cannot land any more cod on a subsequent trip until at least 6 a.m. on the following day). For each trip longer than 24 hr, a vessel may land up to an additional 800 lb (362.9 kg) for each additional 24-hr block of DAS fished, or part of an additional 24-hr block of DAS fished, up to a maximum of 4,000 lb (1,814.4 kg) per trip (e.g., a vessel that has been called into the DAS program for more than 24 hr, but less than 48 hr, may land up to, but no more than, 1,600 lb (725.7 kg) of cod). A vessel that has been called into only part of an additional 24-hr block of a DAS (e.g., a vessel that has been called into the DAS program for more than 24 hr, but less than 48 hr) may land up to an additional 800 lb (362.9 kg) of cod for that trip, provided the vessel complies with the provisions of paragraph (l)(1)(ii) of this section. Cod on board a vessel subject to this landing limit must be separated from other species of fish and stored so as to be readily available for inspection.

(ii) A vessel that has been called into or declared into only part of an additional 24-hr block may come into port with and offload cod up to an additional 800 lb (362.9 kg), provided that the vessel operator, with the exception of vessels fishing in one or both of the two differential DAS areas under the restrictions of § 648.82(e)(4), complies with the following:

(A) For a vessel that is subject to the VMS provisions specified under § 648.10(b), the vessel declares through VMS that insufficient DAS have elapsed in order to account for the amount of cod onboard and, after returning to port, does not depart from a dock or mooring in port, unless transiting as allowed under paragraph (l)(3) of this section, until the rest of the additional 24-hr block of the DAS has elapsed, regardless of whether all of the cod on board is offloaded (e.g., a vessel that has been in the DAS program for 25 hr prior to crossing the VMS demarcation line on the return to port may land only up to 1,600 lb (725.7 kg) of cod, provided the vessel does not declare another trip or leave port until 48 hr have elapsed from the beginning of the trip).

(B) For a vessel that has been authorized by the Regional Administrator to utilize the DAS call-in system, as specified under § 648.10(c), in lieu of VMS, the vessel does not call out of the DAS program as described under § 648.10(c)(3) and does not depart from a dock or mooring in port, unless transiting as allowed in paragraph (l)(3) of this section, until the rest of the additional 24-hr block of DAS has elapsed, regardless of whether all of the cod on board is offloaded (e.g., a vessel that has been called into the DAS program for 25 hr at the time of landing

may land only up to 1,600 lb (725.6 kg) of cod, provided the vessel does not call out of the DAS program or leave port until 48 hr have elapsed from the beginning of the trip).

(2) *GB cod landing and maximum possession limits*. (i) Unless otherwise restricted under § 648.85 or the provisions of paragraph (l)(2)(ii) of this section, or unless exempt from the landing limit under paragraph (l)(1) of this section as authorized under the Sector provisions of § 648.87, a NE multispecies DAS vessel may land up to 1,000 lb (453.6 kg) of cod per DAS, or part of a DAS, provided it complies with the requirements specified at paragraph (l)(4) of this section and this paragraph (l)(2). A NE multispecies DAS vessel may land up to 1,000 lb (453.6 kg) of cod during the first 24-hr period after such vessel has started a trip on which cod were landed (e.g., a vessel that starts a trip at 6 a.m. may call out of the DAS program at 11 a.m. and land up to 1,000 lb (453.6 kg) of cod, but the vessel cannot land any more cod on a subsequent trip until at least 6 a.m. on the following day). For each trip longer than 24 hr, a vessel may land up to an additional 1,000 lb (453.6 kg) of cod for each additional 24-hr block of DAS fished, or part of an additional 24-hr block of DAS fished, up to a maximum of 10,000 lb (4,536 kg) of cod per trip (e.g., a vessel that has been called into the DAS program for more than 24 hr, but less than 48 hr, may land up to, but no more than, 2,000 lb (907.2 kg) of cod). A vessel that has been called into only part of an additional 24-hr block of a DAS (e.g., a vessel that has been called into the DAS program for more than 24 hr, but less than 48 hr) may land up to an additional 1,000 lb (453.6 kg) of cod for that trip, provided the vessel complies with the provisions of paragraph (l)(2)(ii) of this section. Cod on board a vessel subject to this landing limit must be separated from other species of fish and stored so as to be readily available for inspection.

(ii) A vessel that has been called into or declared into only part of an additional 24-hr block may come into port with and offload cod up to an additional 1,000 lb (453.6 kg), provided that the vessel operator, with the exception of vessels fishing in one or both of the differential DAS areas under the restrictions of § 648.82(e)(4), complies with the following:

(A) For a vessel that has been authorized by the Regional Administrator to utilize the DAS call-in system as specified under § 648.10(c), in lieu of VMS, the vessel does not call out of the DAS program as described under § 648.10(c)(3) and does not depart from a dock or mooring in port, unless transiting, as allowed in paragraph (l)(3) of this section, until the rest of the additional 24-hr block of DAS has elapsed, regardless of whether all of the cod on board is offloaded (e.g., a vessel that has been called into the DAS program for 25 hr at the time of landing may land only up to 2,000 lb (907.2 kg) of cod, provided the vessel does not call out of the DAS program or leave port until 48 hr have elapsed from the beginning of the trip.)

(B) For a vessel that is subject to the VMS provisions specified under § 648.10(b), the vessel declares through VMS that insufficient DAS have elapsed in order to account for the amount of cod onboard, and after returning to port does not depart from a dock or mooring in port, unless transiting, as allowed under paragraph (l)(3) of this section, until the rest of the additional 24-hr block of the DAS has elapsed, regardless of whether all of the cod on board is offloaded (e.g., a vessel that has been in the DAS program for 25 hr prior to crossing the VMS demarcation line on the return to port may land only up to 2,000 lb (907.2 kg) of cod, provided the vessel does not declare another trip or leave port until 48 hr have elapsed from the beginning of the trip.)

(3) *Transiting*. A vessel that has exceeded the cod landing limit as specified in paragraphs (l)(1) and (2) of this section, and that is, therefore, subject to the requirement to remain in port for the period of time described in paragraphs (l)(1)(ii)(A) and (l)(2)(ii)(A) of this section, may transit to another port during this time, provided that the vessel operator notifies the Regional Administrator, either at the time the vessel reports its hailed weight of cod, or at a later time prior to transiting, and provides the following information: Vessel name and permit number, destination port, time of departure, and estimated time of arrival. A vessel transiting under this provision must stow its gear in accordance with one of the methods specified in § 648.23(b) and may not have any fish on board the vessel.

(4) *Exemption*. A vessel fishing under a NE multispecies DAS is exempt from the landing limit described in paragraph (l)(1) of this section when fishing south of the Gulf of Maine Regulated Mesh Area, defined in § 648.80(a)(1), provided that it complies with the requirement of this paragraph (l)(4).

(i) *Declaration*. With the exception of vessels declared into the U.S./Canada Management Area, as described under § 648.85(a)(3)(viii), a NE multispecies DAS vessel that fishes or intends to fish south of the line described in this paragraph (l)(4)(i) under the cod trip limits described under paragraph (l)(2) of this section, must, prior to leaving the dock, declare its intention to do so through the VMS, in accordance with instructions to be provided by the Regional Administrator. In lieu of a VMS declaration, the Regional Administrator may authorize such vessels to obtain a letter of authorization. If a letter of authorization is required, such vessel may not fish north of the exemption area for a minimum of 7 consecutive days (when fishing under the NE multispecies DAS program), and must carry the authorization letter on board.

(ii) A vessel exempt from the GOM cod landing limit may not fish north of the line specified in this paragraph (l)(4)(ii) for the duration of the trip, but may transit the GOM Regulated Mesh Area, provided that its gear is stowed in accordance with the provisions of § 648.23(b). A vessel fishing north and south of the line on the same trip is subject to the most restrictive applicable cod trip limit.

(m) *Witch flounder*. Unless otherwise restricted under this part, a vessel issued a NE multispecies DAS permit, a limited access Handgear A permit, an open access Handgear B permit, or a monkfish limited access permit and fishing under the monkfish Category C or D permit provisions may land up to 1,000 lb (453.6 kg) of witch flounder per DAS, or any part of a DAS, up to 5,000 lb (2,268.1 kg) per trip.

(n) *Zero retention stocks*.—(1) *SNE winter flounder*. Vessels issued a NE multispecies permit may not fish for, possess, or land winter flounder caught in the SNE/MA winter flounder stock area, as defined in § 648.85(b)(10)(v)(E). Vessels may transit this area with GOM or GB winter flounder on board the vessel, provided that gear is stowed in accordance with the provisions of § 648.23(b). Vessels fishing for winter flounder in multiple stock areas are subject to the most restrictive winter flounder possession limit.

(2) *Northern windowpane flounder*. Vessels issued a NE multispecies permit may not fish for, possess, or land windowpane flounder caught in the northern windowpane flounder stock area, as defined in § 648.85(b)(10)(v)(F). Vessels may transit this area with southern windowpane flounder on board, provided that gear is stowed in accordance with the provisions of § 648.23(b). Vessels fishing for windowpane flounder in multiple stock areas would be subject to the most restrictive windowpane flounder possession limit.

(3) *Ocean pout.* Vessels issued a NE multispecies permit may not fish for, possess or land ocean pout.

■ 10. In § 648.89, paragraphs (b)(1), (c)(1)(v), and (c)(2) are suspended, and paragraphs (b)(5), (c)(1)(vi), (c)(5), and (f) are added to read as follows:

§ 648.89 Recreational and charter/party vessel restrictions.

* * * * *

(b) * * *

(5) *Minimum fish sizes.* Unless further restricted under paragraph (b)(3) of this section, persons aboard charter or party vessels permitted under this part and not fishing under the NE multispecies DAS program, and recreational fishing vessels in or possessing fish from the EEZ, may not possess fish smaller than the minimum fish sizes, measured in total length (TL), as follows:

MINIMUM FISH SIZES (TL) FOR CHARTER, PARTY, AND PRIVATE RECREATIONAL VESSELS

Species	Sizes
Cod	22 in (58.4 cm)
Haddock	18 in (45.7 cm)
Pollock	19 in (48.3 cm)
Witch flounder (gray sole)	14 in (35.6 cm)
Yellowtail flounder	13 in (33.0 cm)
Atlantic halibut	36 in (91.4 cm)
American plaice (dab)	14 in (35.6 cm)
Winter flounder (blackback)	12 in (30.5 cm)
Redfish	9 in (22.9 cm)

(c) * * *

(1) * * *

(vi) *Seasonal GOM cod possession prohibition.* Persons aboard private recreational fishing vessels fishing in the GOM Regulated Mesh Area specified under § 648.80(a)(1) may not fish for, possess, or land any cod from November 1 through April 15. Private recreational vessels in possession of cod caught outside the GOM Regulated Mesh Area may transit this area, provided all bait and hooks are removed from all fishing rods, and any cod on board has been gutted and stored.

* * * * *

(5) *Charter/party vessels.* Charter/party vessels are subject to the following possession limit restrictions:

(i) Unless further restricted by the Seasonal GOM Cod Possession Prohibition, specified under paragraph (c)(5)(v) of this section, each person on a charter/party vessel may possess no more than 10 cod per day in, or harvested from, the EEZ.

(ii) For purposes of counting fish, fillets shall be converted to whole fish at the place of landing by dividing the number of fillets by two. If fish are filleted into a single (butterfly) fillet, such fillet shall be deemed to be from one whole fish.

(iii) Cod harvested by charter/party vessels with more than one person aboard may be pooled in one or more containers. Compliance with the possession limits will be determined by dividing the number of fish on board by the number of persons on board. If there is a violation of the possession limits on board a vessel carrying more than one person, the violation shall be deemed to have been committed by the owner and operator of the vessel.

(iv) Cod must be stored so as to be readily available for inspection.

(v) *Seasonal GOM cod possession prohibition.* Persons aboard charter/party fishing vessels fishing in the GOM Regulated Mesh Area specified under § 648.80(a)(1) may not fish for or possess any cod from November 1 through April 15. Charter/party vessels in possession of cod caught outside the GOM Regulated Mesh Area may transit this area, provided all bait and hooks are removed from all fishing rods, and any cod on board has been gutted and stored.

* * * * *

(f) *SNE/MA winter flounder retention prohibition.* Private recreational and charter/party vessels fishing in the SNE/MA winter flounder stock area, as defined in § 648.85(b)(10)(v)(E), may not fish for, possess, or land winter flounder. Recreational vessels in possession of winter flounder caught outside of the SNE/MA winter flounder may transit this area, provided all bait and hooks are removed from all fishing rods, and any winter flounder on board has been stored.

■ 11. In § 648.92, paragraphs (b)(1)(i), (b)(1)(iii)(A), (b)(2), and (b)(8)(v) are suspended; and paragraphs (b)(1)(iii)(C), (b)(1)(vi), (b)(8)(vi), and (b)(10) are added to read as follows:

§ 648.92 Effort-control program for monkfish limited access vessels.

* * * * *

(b) * * *

(1) * * *

(iii) * * *

(C) Vessels that change their DAS declaration from a NE multispecies Category A DAS to a monkfish DAS during the course of a trip remain subject to the NE multispecies DAS usage requirements (i.e., use a NE multispecies Category A DAS in conjunction with the monkfish DAS) described in paragraph (b)(10)(i) of this section.

* * * * *

(vi) *General provision.* Limited access monkfish permit holders shall be allocated 31 monkfish DAS each fishing year to be used in accordance with the restrictions of this paragraph (b), unless otherwise restricted by paragraph (b)(1)(ii) of this section or modified by § 648.96(b)(3), or unless the vessel is enrolled in the Offshore Fishery Program in the SFMA, as specified in paragraph (b)(1)(iv) of this section. The annual allocation of monkfish DAS shall be reduced by the amount calculated in paragraph (b)(1)(v) of this section for the research DAS set-aside. Limited access NE multispecies and limited access sea scallop permit holders who also possess a limited access monkfish permit must use a NE multispecies or sea scallop DAS concurrently with each monkfish DAS utilized, except as provided in paragraph (b)(10) of this section, unless otherwise specified under this subpart F.

* * * * *

(8) * * *

(vi) *Method of counting DAS.* A vessel fishing with gillnet gear under a monkfish DAS shall accrue 15 hr of monkfish DAS for all trips less than or equal to 15 hr in duration. Such vessels shall accrue monkfish DAS based on actual time at sea for trips greater than 15 hr in duration. A vessel fishing with gillnet gear under only a monkfish DAS is not required to remove gillnet gear from the water upon returning to the dock and calling out of the DAS program, provided the vessel complies with the requirements and conditions of paragraphs (b)(8)(i)–(vi) of this section. A vessel fishing with gillnet gear under a joint monkfish and NE multispecies DAS, as required under § 648.92(b)(10)(i), that is declared as a trip gillnet vessel under the NE Multispecies FMP, must remove its gillnet gear from the water prior to calling out of the DAS program, as specified at § 648.82(j)(2).

* * * * *

(10) *Category C, D, F, G, or H limited access monkfish permit holders*—(i) Unless otherwise specified in paragraph (b)(10)(ii) of this section, each monkfish DAS used by a limited access NE multispecies or scallop DAS vessel holding a Category C, D, F, G, or H limited access monkfish permit shall also be counted as a NE multispecies or scallop DAS, as applicable, except when a Category C, D, F, G, or H vessel with a limited access NE multispecies DAS permit has an allocation of NE multispecies Category A DAS, specified under § 648.82(d)(1), that is less than the number of monkfish DAS allocated for the fishing year May 1 through April 30. Under this circumstance, the vessel may fish under the monkfish limited

access Category A or B provisions, as applicable, for the number of DAS that equal the difference between the number of its allocated monkfish DAS and its allocated NE multispecies Category A DAS. For such vessels, when the total allocation of NE multispecies Category A DAS has been used, a monkfish DAS may be used without concurrent use of a NE multispecies DAS, provided that the vessel fishes under the regulations pertaining to a Category B vessel and does not retain any regulated NE multispecies. For example, if a monkfish Category D vessel's NE multispecies Category A DAS allocation is 20, and the monkfish allocation is 31, the vessel may use up to 11 of its monkfish DAS without concurrently using a groundfish DAS (31 − 20 = 11), after all 20 NE multispecies Category A DAS are used. In addition, Category C and D vessels that are fishing in one or both of the 2:1 differential DAS areas specified in § 648.82(e)(4)(i) shall accrue monkfish-only DAS to account for those monkfish DAS that are ''lost'' as a result of fishing in the differential DAS area (resulting from the use of groundfish DAS at a higher rate). These vessels shall accrue monkfish-only DAS at a rate of 1 monkfish DAS for every 2 NE multispecies DAS used in the differential area (2:1 rate). These monkfish-only DAS may later be used without concurrent use of a NE multispecies DAS, provided that the vessel fishes under the regulations pertaining to a Category A or Category B vessel and does not retain any regulated NE multispecies. A vessel holding a Category C, D, F, G, or H limited access monkfish permit may not use a NE multispecies Category B Regular DAS under the NE Multispecies Regular B DAS Program, as specified under § 648.85(b)(10), in order to satisfy the requirement of this paragraph (b)(10)(i) to use a NE multispecies DAS concurrently with a monkfish DAS.

(ii) *Category C, D, F, G, or H vessels that lease NE multispecies DAS.*—(A) A monkfish Category C, D, F, G, or H vessel that has ''monkfish-only'' DAS, as specified in paragraph (b)(2)(i) of this section, and that leases NE multispecies DAS from another vessel pursuant to § 648.82(k), is required to fish its available ''monkfish-only'' DAS in conjunction with its leased NE multispecies DAS, to the extent that the vessel has NE multispecies DAS available.

(B) A monkfish Category C, D, F, G, or H vessel that leases DAS to another vessel(s), pursuant to § 648.82(k) must forfeit a monkfish DAS for each NE multispecies DAS that the vessel leases, equal in number to the difference between the number of remaining NE multispecies DAS and the number of unused monkfish DAS at the time of the lease. For example, if a lessor vessel that had 31 unused monkfish DAS and 35 allocated NE multispecies DAS leased 10 of its NE multispecies DAS to another vessel, the lessor would forfeit 6 of its monkfish DAS (10 − (35 NE multispecies DAS − 31 monkfish DAS) = 6).

* * * * *

■ 12. In § 648.95, paragraph (h) is suspended and paragraph (i) is added to read as follows:

§ 648.95 Offshore Fishery Program in the SFMA.

* * * * *

(i) *DAS usage by NE multispecies or sea scallop limited access permit holders.* A vessel issued a Category F permit that also has been issued either a NE multispecies or sea scallop limited access permit, and is fishing on a monkfish DAS, is subject to the DAS usage requirements specified in § 648.92(b)(10).

[FR Doc. E9–8092 Filed 4–10–09; 8:45 am]

BILLING CODE 3510–22–P

Federal Register

Monday,
April 13, 2009

Part IV

The President

Proclamation 8359—National Sexual Assault Awareness Month, 2009

Executive Order 13507—Establishment of the White House Office of Health Reform

Federal Register
Vol. 74, No. 69
Monday, April 13, 2009

Presidential Documents

Title 3—

The President

Proclamation 8359 of April 8, 2009

National Sexual Assault Awareness Month, 2009

By the President of the United States of America

A Proclamation

Sexual assault scars the lives of millions in the United States. To increase awareness about this issue, prevent future crimes, and aid victims, this month we mark National Sexual Assault Awareness Month.

Sexual assault is pervasive in the United States. Study after study has shown that this crime impacts people at all age levels and in every part of this Nation. One recent study found that 18 percent of women in this country have been raped in their lifetime. In addition, rates of sexual assault remain startlingly high for students from high school to college. A 2005 survey of high school students found that 10.8 percent of girls and 4.2 percent of boys from grades nine to twelve were forced to have sexual intercourse at some time in their lives. A study of college women found that 13.7 percent of undergraduate women had been victims of at least one completed sexual assault since entering college. Unlike victims of sexual assault in the larger community, students victimized by other students often face additional challenges in a ''closed'' campus environment. For example, a victim may continue to live in danger if the perpetrator resides in the same dormitory or attends the same classes. These statistics are all the more alarming given that, according to recent research, a majority of victims do not report their attacks to police.

Victims of all ages suffer from both the physical and emotional consequences of the attack. Sexual assault can lead to long-term health problems including chronic pain, stomach problems, and sexually transmitted diseases. It can also cause severe emotional harm that may be even more painful than the assault itself and resulting physical injuries. The effects of sexual assault go well beyond the direct victim: sexual assault also has a profound impact on a victim's family, friends, neighbors, and workplace.

Victims need an array of services to heal from the trauma of sexual assault, including crisis intervention, 24-hour sexual assault hotlines, medical and criminal justice accompaniment, advocacy, and counseling. Victim service providers are essential to this effort and work tirelessly to help victims cope with the trauma of sexual assault and transition from ''victim'' to ''survivor.''

Landmark legislation has helped fund these critical services. The Victims of Crime Act of 1984 (VOCA, Public Law 98–473) established the Crime Victims Fund to fund services such as forensic sexual assault examinations and compensation claims for both adult and child victims. For example, since 1997, VOCA funding has supported the development of Sexual Assault Nurse Examiner (SANE) programs and multi-disciplinary Sexual Assault Response Teams (SART). The Violence Against Women Act of 2005 (VAWA, Public Law 109–162) authorized the Sexual Assault Services Program, the first Federal funding dedicated exclusively to sexual assault services. The Program includes funding for culturally specific programs that serve victims who face unique cultural and linguistic barriers.

In addition to helping victims, offenders must be held accountable for their crimes. Sexual assault forensic examinations and trained examiners can

ensure that victims are treated with requisite sensitivity and that critical evidence is collected to facilitate a successful prosecution. To this end, VAWA mandates that all States that accept Federal grants to combat violence against women ensure that sexual assault victims receive forensic examinations free of charge, even if the victim chooses not to report the crime to the police.

To make continued progress, my Administration supports efforts to help Americans better understand this issue. Working together, we can reduce the incidence of sexual assault and help all who have experienced this heinous crime.

NOW, THEREFORE, I, BARACK OBAMA, President of the United States of America, by virtue of the authority vested in me by the Constitution and laws of the United States, do hereby proclaim April 2009, as National Sexual Assault Awareness Month. I urge all Americans to respond to sexual assault by creating policies at work and school, by engaging in discussions with family and friends, and by making the prevention of sexual assault a priority in their communities.

IN WITNESS WHEREOF, I have hereunto set my hand this eighth day of April, in the year of our Lord two thousand nine, and of the Independence of the United States of America the two hundred and thirty-third.

[FR Doc. E9–8571
Filed 4–10–09; 11:15 am]
Billing code 3195–W9–P

Presidential Documents

Executive Order 13507 of April 8, 2009

Establishment of the White House Office of Health Reform

By the authority vested in me as President by the Constitution and the laws of the United States of America, and in the interest of providing all Americans access to affordable and high-quality health care, it is hereby ordered as follows:

Section 1. *Policy.* Reforming the health care system is a key goal of my Administration. The health care system suffers from serious and pervasive problems; access to health care is constrained by high and rising costs; and the quality of care is not consistent and must be improved, in order to improve the health of our citizens and our economic security.

Sec. 2. *Establishment.* (a) There is established a White House Office of Health Reform (Health Reform Office) within the Executive Office of the President that will provide leadership to the executive branch in establishing policies, priorities, and objectives for the Federal Government's comprehensive effort to improve access to health care, the quality of such care, and the sustainability of the health care system.

(b) The Secretary of Health and Human Services, to the extent permitted by law, shall establish within the Department of Health and Human Services (HHS) an Office of Health Reform, which shall coordinate closely with the White House Office of Health Reform.

Sec. 3. *Functions.* The principal functions of the Health Reform Office, to the extent permitted by law, are to:

(a) provide leadership for and to coordinate the development of the Administration's policy agenda across executive departments and agencies concerning the provision of high-quality, affordable, and accessible health care and to slow the growth of health costs; this shall include coordinating policy development with the Domestic Policy Council, National Economic Council, Council of Economic Advisers, Office of Management and Budget, HHS, Office of Personnel Management, and such other executive departments and agencies as the Director of the Health Reform Office may deem appropriate;

(b) work with executive departments and agencies to ensure that Federal Government policy decisions and programs are consistent with the President's stated goals with respect to health reform;

(c) integrate the President's policy agenda concerning health reform across the Federal Government;

(d) coordinate public outreach activities conducted by executive departments and agencies designed to gather input from the public, from demonstration and pilot projects, and from public-private partnerships on the problems and priorities for policy measures designed to meet the President's goals for improvement of the health care system;

(e) bring to the President's attention concerns, ideas, and policy options for strengthening, increasing the efficiency, and improving the quality of the health care system;

(f) work with State, local, and community policymakers and public officials to expand coverage, improve quality and efficiency, and slow the growth of health costs;

(g) develop and implement strategic initiatives under the President's agenda to strengthen the public agencies and private organizations that can improve the performance of the health care system;

(h) work with the Congress and executive departments and agencies to eliminate unnecessary legislative, regulatory, and other bureaucratic barriers that impede effective delivery of efficient and high-quality health care;

(i) monitor implementation of the President's agenda on health reform; and

(j) help ensure that policymakers across the executive branch work toward the President's health care agenda.

Sec. 4. *Administration.* (a) The Health Reform Office may work with established or ad hoc committees, task forces, or interagency groups.

(b) The Health Reform Office shall have a staff headed by the Director of the Health Reform Office (Director). The Health Reform Office shall have such staff and other assistance as may be necessary to carry out the provisions of this order.

(c) As requested by the Director, each executive department and agency shall designate a liaison to work with the Health Reform Office on improving access to health care, the quality of health care, and the sustainability of the health care system.

(d) All executive departments and agencies shall cooperate with the Health Reform Office and provide such information, support, and assistance to the Health Reform Office as it may request, to the extent permitted by law.

Sec. 5. *General Provisions.* (a) Nothing in this order shall be construed to impair or otherwise affect:

(i) authority granted by law to a department, agency, or the head thereof; or

(ii) functions of the Director of the Office of Management and Budget relating to budgetary, administrative, or legislative proposals.

(b) This order shall be implemented consistent with applicable law and subject to the availability of appropriations.

(c) This order is not intended to, and does not, create any right or benefit, substantive or procedural, enforceable at law or in equity, by any party against the United States, its departments, agencies, or entities, its officers, employees, or agents, or any other person.

THE WHITE HOUSE,
April 8, 2009.

[FR Doc. E9–8572
Filed 4–10–09; 11:15 am]
Billing code 3195–W9–P

Reader Aids

Federal Register

Vol. 74, No. 69

Monday, April 13, 2009

CUSTOMER SERVICE AND INFORMATION

Federal Register/Code of Federal Regulations	
General Information, indexes and other finding aids	**202–741–6000**
Laws	**741–6000**
Presidential Documents	
Executive orders and proclamations	**741–6000**
The United States Government Manual	**741–6000**
Other Services	
Electronic and on-line services (voice)	**741–6020**
Privacy Act Compilation	**741–6064**
Public Laws Update Service (numbers, dates, etc.)	**741–6043**
TTY for the deaf-and-hard-of-hearing	**741–6086**

ELECTRONIC RESEARCH

World Wide Web

Full text of the daily Federal Register, CFR and other publications is located at: **http://www.gpoaccess.gov/nara/index.html**

Federal Register information and research tools, including Public Inspection List, indexes, and links to GPO Access are located at: **http://www.archives.gov/federal_register**

E-mail

FEDREGTOC-L (Federal Register Table of Contents LISTSERV) is an open e-mail service that provides subscribers with a digital form of the Federal Register Table of Contents. The digital form of the Federal Register Table of Contents includes HTML and PDF links to the full text of each document.

To join or leave, go to **http://listserv.access.gpo.gov** and select *Online mailing list archives, FEDREGTOC-L, Join or leave the list (or change settings);* then follow the instructions.

PENS (Public Law Electronic Notification Service) is an e-mail service that notifies subscribers of recently enacted laws.

To subscribe, go to **http://listserv.gsa.gov/archives/publaws-l.html** and select *Join or leave the list (or change settings);* then follow the instructions.

FEDREGTOC-L and **PENS** are mailing lists only. We cannot respond to specific inquiries.

Reference questions. Send questions and comments about the Federal Register system to: **fedreg.info@nara.gov**

The Federal Register staff cannot interpret specific documents or regulations.

Reminders. Effective January 1, 2009, the Reminders, including Rules Going Into Effect and Comments Due Next Week, no longer appear in the Reader Aids section of the Federal Register. This information can be found online at **http://www.regulations.gov.**

CFR Checklist. Effective January 1, 2009, the CFR Checklist no longer appears in the Federal Register. This information can be found online at **http://bookstore.gpo.gov/.**

FEDERAL REGISTER PAGES AND DATE, APRIL

14703–14928 1
14929–15214 2
15215–15358 3
15359–15634 6
15635–15828 7
15829–16096 8
16097–16320 9
16321–16752 10
16753–17074 13

CFR PARTS AFFECTED DURING APRIL

At the end of each month, the Office of the Federal Register publishes separately a List of CFR Sections Affected (LSA), which lists parts and sections affected by documents published since the revision date of each title.

3 CFR

Proclamations:
8354 15629
8355 15631
8356 15633
8357 15829
8358 16751
8359 17069

Executive Orders:
13507 17071

7 CFR

271 14935
272 14935
273 14935
276 14935
301 16097
305 15635
318 15640
319 15635
331 16753
905 15641
944 15641
985 16321
1216 15226
1421 15644
1434 15644
1435 15359

Proposed Rules:
305 16146
319 16146
340 16797
610 15673
905 16798
1000 16296
1001 16296
1005 16296
1006 16296
1007 16296
1030 16296
1032 16296
1033 16296
1124 16296
1126 16296
1131 16296
1205 16331
1208 .....16266, 16289
1209 15677

8 CFR

208 15367

9 CFR

71 14703
121 16753
145 14710
146 14710
166 15215
247 14710
392 16104

10 CFR

430 16040

Proposed Rules:
50 16802
430 16920

12 CFR

24 15657

14 CFR

25 .....15831, 15833, 15838
39 .....14719, 14929, 15369, 15371, 15665, 15841, 16108, 16112, 16114, 16116, 16117, 16121, 16754, 16755
71 15842
95 16758

Proposed Rules:
25 .....15888, 15890
39 .....14750, 14751, 15399, 15401, 15681, 15683, 15894, 15896, 16152, 16154, 16803, 16807, 16809, 16811
71 .....15403, 16812

15 CFR

801 15843
902 15373

Proposed Rules:
801 16337

17 CFR

232 15666
239 15666
249 15666

18 CFR

38 15374

Proposed Rules:
38 16160

20 CFR

403 16326
429 16326

21 CFR

5 14720
1300 15596
1301 15596
1304 15596
1306 15596

Proposed Rules:
589 16160

22 CFR

62 15844
215 14931

24 CFR

30 14725

26 CFR

1 14931

Proposed Rules:
1 16161

31 CFR

543 16763
544 16771

33 CFR

117 ....14725, 14726, 14932, 15218, 16781, 16782, 16783
165 ....14726, 14729, 15845, 15854

Proposed Rules:

101 16161
104 16161
105 16161
106 16161
110 14938
117 16814
165 ....15404, 15407, 15409, 15412, 15414, 15417, 15899, 16814

37 CFR

Proposed Rules:

370 15901

39 CFR

20 14932
111 ....15376, 15380, 16124
3001 16734
3020 15384
3030 16734
3031 16734

Proposed Rules:

111 15226

40 CFR

52 ....14731, 14734, 15219, 15856, 15864
112 14736
180 ....14738, 14743, 14744, 15865, 15869, 15876, 15880
300 16126
707 16327

Proposed Rules:

51 14941
52 14759
59 14941
86 16448
87 16448
89 16448
90 16448
94 16448
98 16448
300 16162
600 16448
1033 16448
1039 16448
1042 16448
1045 16448
1048 16448
1051 16448
1054 16448
1065 16448

41 CFR

300-3 16327
301-2 16327
301-11 ....16327, 16329
301-70 16327

42 CFR

440 15221

44 CFR

Ch. 1 15328
65 16783
67 16785

Proposed Rules:

206 15228

45 CFR

Proposed Rules:

612 16815

47 CFR

1 16794
300 16795

Proposed Rules:

36 15236

48 CFR

Proposed Rules:

2 16823
19 16823
52 16823

49 CFR

23 15222
26 15222
171 16135
173 16135
176 16135
178 16135
180 16135
232 15387
373 15388

Proposed Rules:

26 ....15904, 15910

50 CFR

17 ....15070, 15123
21 15394
635 15669
648 ....14933, 17030
679 ....15887, 16144, 16145

Proposed Rules:

17 16169
20 16339
218 15419
622 15911
648 14760
665 15685
679 ....14950, 15420

LIST OF PUBLIC LAWS

This is a continuing list of public bills from the current session of Congress which have become Federal laws. It may be used in conjunction with "P L U S" (Public Laws Update Service) on 202–741–6043. This list is also available online at *http://www.archives.gov/federal-register/laws.html*.

The text of laws is not published in the **Federal Register** but may be ordered in "slip law" (individual pamphlet) form from the Superintendent of Documents, U.S. Government Printing Office, Washington, DC 20402 (phone, 202–512–1808). The text will also be made available on the Internet from GPO Access at *http://www.gpoaccess.gov/plaws/index.html*. Some laws may not yet be available.

H.R. 146/P.L. 111–11
Omnibus Public Land Management Act of 2009 (Mar. 30, 2009; 123 Stat. 991)

H.R. 1512/P.L. 111–12
Federal Aviation Administration Extension Act of 2009 (Mar. 30, 2009; 123 Stat. 1457)

Last List March 23, 2009

Public Laws Electronic Notification Service (PENS)

PENS is a free electronic mail notification service of newly enacted public laws. To subscribe, go to *http://listserv.gsa.gov/archives/publaws-l.html*

Note: This service is strictly for E-mail notification of new laws. The text of laws is not available through this service. **PENS** cannot respond to specific inquiries sent to this address.