AUTHENTICATED
U.S. GOVERNMENT
INFORMATION
GPO

Federal Register

6–22–09 Monday
Vol. 74 No. 118 June 22, 2009

Pages 29393–29588

The **FEDERAL REGISTER** (ISSN 0097–6326) is published daily, Monday through Friday, except official holidays, by the Office of the Federal Register, National Archives and Records Administration, Washington, DC 20408, under the Federal Register Act (44 U.S.C. Ch. 15) and the regulations of the Administrative Committee of the Federal Register (1 CFR Ch. I). The Superintendent of Documents, U.S. Government Printing Office, Washington, DC 20402 is the exclusive distributor of the official edition. Periodicals postage is paid at Washington, DC.

The **FEDERAL REGISTER** provides a uniform system for making available to the public regulations and legal notices issued by Federal agencies. These include Presidential proclamations and Executive Orders, Federal agency documents having general applicability and legal effect, documents required to be published by act of Congress, and other Federal agency documents of public interest.

Documents are on file for public inspection in the Office of the Federal Register the day before they are published, unless the issuing agency requests earlier filing. For a list of documents currently on file for public inspection, see *www.federalregister.gov.*

The seal of the National Archives and Records Administration authenticates the Federal Register as the official serial publication established under the Federal Register Act. Under 44 U.S.C. 1507, the contents of the **Federal Register** shall be judicially noticed.

The **Federal Register** is published in paper and on 24x microfiche. It is also available online at no charge as one of the databases on GPO Access, a service of the U.S. Government Printing Office.

The online edition of the **Federal Register** *www.gpoaccess.gov/nara,* available through GPO Access, is issued under the authority of the Administrative Committee of the Federal Register as the official legal equivalent of the paper and microfiche editions (44 U.S.C. 4101 and 1 CFR 5.10). It is updated by 6 a.m. each day the **Federal Register** is published and includes both text and graphics from Volume 59, Number 1 (January 2, 1994) forward.

For more information about GPO Access, contact the GPO Access User Support Team, call toll free 1-888-293-6498; DC area 202-512-1530; fax at 202-512-1262; or via e-mail at *gpoaccess@gpo.gov.* The Support Team is available between 7:00 a.m. and 9:00 p.m. Eastern Time, Monday–Friday, except official holidays.

The annual subscription price for the **Federal Register** paper edition is $749 plus postage, or $808, plus postage, for a combined **Federal Register, Federal Register** Index and List of CFR Sections Affected (LSA) subscription; the microfiche edition of the **Federal Register** including the **Federal Register** Index and LSA is $165, plus postage. Six month subscriptions are available for one-half the annual rate. The prevailing postal rates will be applied to orders according to the delivery method requested. The price of a single copy of the daily **Federal Register,** including postage, is based on the number of pages: $11 for an issue containing less than 200 pages; $22 for an issue containing 200 to 400 pages; and $33 for an issue containing more than 400 pages. Single issues of the microfiche edition may be purchased for $3 per copy, including postage. Remit check or money order, made payable to the Superintendent of Documents, or charge to your GPO Deposit Account, VISA, MasterCard, American Express, or Discover. Mail to: U.S. Government Printing Office—New Orders, P.O. Box 979050, St. Louis, MO 63197-9000; or call toll free 1-866-512-1800, DC area 202-512-1800; or go to the U.S. Government Online Bookstore site, see *bookstore.gpo.gov.*

There are no restrictions on the republication of material appearing in the **Federal Register.**

How To Cite This Publication: Use the volume number and the page number. Example: 74 FR 12345.

Postmaster: Send address changes to the Superintendent of Documents, Federal Register, U.S. Government Printing Office, Washington, DC 20402, along with the entire mailing label from the last issue received.

SUBSCRIPTIONS AND COPIES

PUBLIC

Subscriptions:

Paper or fiche	**202–512–1800**
Assistance with public subscriptions	**202–512–1806**

General online information **202–512–1530; 1–888–293–6498**

Single copies/back copies:

Paper or fiche	**202–512–1800**
Assistance with public single copies	**1–866–512–1800 (Toll-Free)**

FEDERAL AGENCIES

Subscriptions:

Paper or fiche	**202–741–6005**
Assistance with Federal agency subscriptions	**202–741–6005**

FEDERAL REGISTER WORKSHOP

THE FEDERAL REGISTER: WHAT IT IS AND HOW TO USE IT

FOR: Any person who uses the Federal Register and Code of Federal Regulations.

WHO: Sponsored by the Office of the Federal Register.

WHAT: Free public briefings (approximately 3 hours) to present:

1. The regulatory process, with a focus on the Federal Register system and the public's role in the development of regulations.
2. The relationship between the Federal Register and Code of Federal Regulations.
3. The important elements of typical Federal Register documents.
4. An introduction to the finding aids of the FR/CFR system.

WHY: To provide the public with access to information necessary to research Federal agency regulations which directly affect them. There will be no discussion of specific agency regulations.

WHEN: Tuesday, July 14, 2009
9:00 a.m.–12:30 p.m.

WHERE: Office of the Federal Register
Conference Room, Suite 700
800 North Capitol Street, NW.
Washington, DC 20002

RESERVATIONS: (202) 741–6008

Printed on recycled paper.

Contents

Federal Register

Vol. 74, No. 118

Monday, June 22, 2009

Agency for Healthcare Research and Quality
NOTICES
Meetings:
National Advisory Council for Healthcare Research and Quality, 29500

Agriculture Department
See Forest Service
See Grain Inspection, Packers and Stockyards Administration
See Rural Utilities Service
NOTICES
Agency Information Collection Activities; Proposals, Submissions, and Approvals, 29462–29463

Alcohol and Tobacco Tax and Trade Bureau
RULESS
Establishment of the Upper Mississippi River Valley Viticultural Area, 29395–29401
Permit Requirements:
Qualification of Manufacturers and Importers of Processed Tobacco; Expanded Definition of Roll-Your-Own Tobacco, 29401–29420
PROPOSED RULES
Permit Requirements:
Qualification of Manufacturers and Importers of Processed Tobacco; Expanded Definition of Roll-Your-Own Tobacco, 29433–29435

Centers for Disease Control and Prevention
NOTICES
Agency Information Collection Activities; Proposals, Submissions, and Approvals, 29489–29490
Meetings:
Board of Scientific Counselors, Coordinating Center for Health Promotion; Correction, 29500

Centers for Medicare & Medicaid Services
PROPOSED RULES
Medicaid Program:
Home and Community-Based Services Waivers, 29453–29456

Children and Families Administration
NOTICES
Agency Information Collection Activities; Proposals, Submissions, and Approvals, 29493–29494

Coast Guard
RULES
Drawbridge Operations:
Mermentau River, Mile 68.0, at Mermentau, Acadia and Jefferson Davis Parishes, LA, 29422
Safety Zones:
F/V PATRIOT, Massachusetts Bay, MA, 29423–29425
Independence Day Celebration for the City of San Francisco, CA, 29422–29423
Naval Training, San Clemente Island, CA, 29425–29427
Target Fireworks, Detroit River, Detroit, MI, 29428–29430
PROPOSED RULES
Notice of Arrival on the Outer Continental Shelf, 29439–29447
Regattas and Marine Parades:
Great Lakes Annual Marine Events, 29436–29439
Safety Zones:
IJSBA World Finals, Lower Colorado River, Lake Havasu, AZ, 29447–29450

Commerce Department
See Foreign-Trade Zones Board
See International Trade Administration
See National Oceanic and Atmospheric Administration
NOTICES
Agency Information Collection Activities; Proposals, Submissions, and Approvals, 29471–29472

Committee for the Implementation of Textile Agreements
NOTICES
Cancellation of Electronic Visa Information System and Quota Reporting Requirements:
Textiles and Textile Products Produced or Manufactured in the People's Republic of China (and Exported Prior to January 1, 2009), 29470–29471
Termination of Textile Visa Requirement:
Women's and Girls' Wool Coats Manufactured in the Russian Federation (Effective July 1, 2009), 29471

Commodity Futures Trading Commission
NOTICES
Meetings; Sunshine Act, 29477

Defense Department
See Navy Department
PROPOSED RULES
TRICARE; Coverage of National Cancer Institute (NCI) Sponsored Phase I Studies, 29435–29436
NOTICES
Federal Acquisition Regulation (FAR):
Agency Information Collection Activities; Proposals, Submissions, and Approvals, 29477–29478
Meetings:
Reserve Forces Policy Board, 29478

Department of Transportation
See Pipeline and Hazardous Materials Safety Administration

Education Department
NOTICES
Agency Information Collection Activities; Proposals, Submissions, and Approvals, 29478–29479
National Advisory Committee on Institutional Quality and Integrity; Members, 29479

Energy Department
NOTICES
Meetings:
DOE/NSF Nuclear Science Advisory Committee, 29480
Environmental Management Site-Specific Advisory Board, Oak Ridge Reservation, 29480

Environmental Protection Agency
PROPOSED RULES
Approval and Promulgation of Air Quality Implementation Plans:
Delaware, Maryland, Pennsylvania; Attainment Demonstration for the Philadelphia–Wilmington–Atlantic City Moderate 8-Hour Ozone Nonattainment Area, 29450–29451
Maryland; Attainment Demonstration for the Baltimore 8-Hour Ozone Moderate Nonattainment Area, 29450
Approval and Promulgation of Implementation Plans:
New Jersey Ozone Attainment Demonstration, 29451–29452
Disapproval of Air Quality Implementation Plans:
Connecticut; Attainment Demonstration for the Connecticut Portion of the New York–N. New Jersey–Long Island, NY–NJ–CT 8-Hour Ozone Nonattainment Area, 29452–29453
NOTICES
Clean Water Act Class II; Proposed Administrative Settlement, Penalty Assessment, and Opportunity to Comment:
Cellco Partnership Doing Business As Verizon Wireless, 29480–29483
Project Waiver of Section 1605 (Buy American Requirement) of the American Recovery and Reinvestment Act (2009):
Auburn, Maine Sewerage District, 29483–29484

Executive Office of the President
See Presidential Documents
See Science and Technology Policy Office

Export–Import Bank
NOTICES
Agency Information Collection Activities; Proposals, Submissions, and Approvals, 29484

Federal Aviation Administration
NOTICES
Proposed Airport Access Restriction; Opportunity for Public Comment, 29530–29531

Federal Communications Commission
NOTICES
Promoting Diversification of Ownership in the Broadcasting Services, 29485

Federal Election Commission
NOTICES
Meetings; Sunshine Act, 29485

Federal Reserve System
NOTICES
Change in Bank Control Notices; Acquisition of Shares of Bank or Bank Holding Companies, 29485–29486
Consumer Advisory Council; Solicitation of Nominations for Membership, 29486–29487
Formations of, Acquisitions by, and Mergers of Bank Holding Companies, 29487

Fish and Wildlife Service
PROPOSED RULES
Endangered and Threatened Wildlife and Plants:
90-Day Finding on a Petition To Revise Critical Habitat for Eriogonum pelinophilum (Clay-Loving Wild Buckwheat), 29456–29461
NOTICES
Draft Comprehensive Conservation Plan and Environmental Assessment:
Bond Swamp National Wildlife Refuge, Bibb and Twiggs Counties, GA, 29511–29514

Food and Drug Administration
NOTICES
Agency Information Collection Activities; Proposals, Submissions, and Approvals, 29490–29493

Foreign–Trade Zones Board
NOTICES
Approval for Expanded Manufacturing Authority:
Foreign–Trade Subzone 82D, Sony Electronics Inc. (Digital Print Media Products), Dothan, AL, 29472
Grant of Authority for Subzone Status:
Thor Industries, Inc. (Recreational Vehicle and Commercial Bus Manufacturing), Goshen, Elkhart, et al., IN, 29475
Thor Industries, Inc. (Recreational Vehicle Manufacturing), Jackson Center, OH, 29474–29475

Forest Service
NOTICES
Environmental Impact Statements; Availability, etc.:
Allegheny National Forest; Pennsylvania, 29463–29464
Meetings:
Black Hills National Forest Custer County Resource Advisory Committee, 29466
Ketchikan Resource Advisory Committee, 29466
Plan Revision for the Kooentai National Forest, Montana and the Idaho Panhandle, 29466–29467
Revised Land and Resource Management Plan:
Coronado National Forest; Arizona, 29467–29468
Southern Recreation Resource Advisory Committee; Request for Nominations, 29468–29469

General Services Administration
NOTICES
Federal Acquisition Regulation (FAR):
Agency Information Collection Activities; Proposals, Submissions, and Approvals, 29477–29478

Grain Inspection, Packers and Stockyards Administration
NOTICES
United States Standards for Whole Dry Peas and Split Peas, 29469–29470

Health and Human Services Department
See Agency for Healthcare Research and Quality
See Centers for Disease Control and Prevention
See Centers for Medicare & Medicaid Services
See Children and Families Administration
See Food and Drug Administration
See National Institutes of Health
See Substance Abuse and Mental Health Services Administration

Homeland Security Department
See Coast Guard

Housing and Urban Development Department
NOTICES
Funding Availability:
Fiscal Year (FY) 2009 Capacity Building for Community Development and Affordable Housing Grants, 29503–29504

Fiscal Year (FY) 2009 Housing Counseling Program, 29510–29511
Fiscal Year (FY) 2009 Housing Counseling Training Program, 29503
Fiscal Year (FY) 2009 Public and Indian Housing Family Self-Sufficiency Program, 29510
Fiscal Year (FY) 2009 Rental Assistance for Non-Elderly Persons with Disabilities; Request for Comments, 29504–29510

Interior Department
See Fish and Wildlife Service
See Land Management Bureau
See National Park Service
See Surface Mining Reclamation and Enforcement Office

International Trade Administration
NOTICES
Final Results of the Third New Shipper Reviews:
Certain Frozen Fish Fillets from the Socialist Republic of Vietnam, 29473–29474
Manufacturing and Services' Sustainable Manufacturing Initiative; Update, 29475–29476

Labor Department
See Occupational Safety and Health Administration

Land Management Bureau
NOTICES
Meetings:
North Slope Science Initiative, Science Technical Advisory Panel, Alaska, 29514–29515

National Aeronautics and Space Administration
NOTICES
Federal Acquisition Regulation (FAR):
Agency Information Collection Activities; Proposals, Submissions, and Approvals, 29477–29478
Meetings:
NASA Advisory Council, 29520

National Council on Disability
NOTICES
Meetings; Sunshine Act, 29520

National Highway Traffic Safety Administration
PROPOSED RULES
Tire Fuel Efficiency Consumer Information Program, 29542–29587

National Institutes of Health
NOTICES
Meetings:
Center for Scientific Review, 29495–29496, 29500–29502
Eunice Kennedy Shriver National Institute of Child Health and Human Development, 29495, 29498–29500, 29502
National Cancer Institute, 29497–29499
National Institute of Allergy and Infectious Diseases, 29496, 29498
National Institute of Biomedical Imaging and Bioengineering, 29497
National Institute of Dental and Craniofacial Research, 29498
National Institute of Environmental Health Sciences, 29498
National Institute of Mental Health, 29496–29497, 29502
National Institute on Drug Abuse, 29503

National Oceanic and Atmospheric Administration
RULES
Fisheries of the Caribbean, Gulf of Mexico, and South Atlantic; Reef Fish Fishery of the Gulf of Mexico:
Closure of the 2009 Deepwater Grouper Commercial Fishery, 29430–29431
Fisheries off West Coast States:
Pacific Coast Groundfish Fishery; Closure of the Pacific Whiting Primary Fishery for the Mothership Sector, 29431–29432
NOTICES
Endangered Species; File No. 1506:
Issuance of Permit Modification, 29472–29473
Meetings:
Fisheries of the South Atlantic and Gulf of Mexico; SEDAR 18 Atlantic Red Drum Assessment Panel, 29476
Mid-Atlantic Fishery Management Council, 29476–29477

National Park Service
NOTICES
Meetings:
Flight 93 National Memorial Advisory Commission, 29515
National Register of Historic Places:
Notification of Pending Nominations and Related Actions, 29515–29516
Policy on Special Park Uses (Draft Directors Order 53), 29516
Preservation Technology and Training Board; Charter Renewal, 29516–29517

Navy Department
RULES
Certifications and Exemptions Under the International Regulations for Preventing Collisions at Sea (1972), 29420–29422

Nuclear Regulatory Commission
NOTICES
Environmental Impact Statements; Availability, etc.:
Unrestricted Release of a Pharmacia Corporation Building in St. Louis, MO, 29520–29522

Occupational Safety and Health Administration
NOTICES
Agency Information Collection Activities; Proposals, Submissions, and Approvals, 29517–29518
Meetings:
National Advisory Committee on Occupational Safety and Health, 29518–29519

Pipeline and Hazardous Materials Safety Administration
PROPOSED RULES
Hazardous Materials Transportation:
Miscellaneous Revisions to Registration and Fee Assessment Program; Withdrawal, 29456

Postal Service
NOTICES
International Product Changes:
Direct Entry Parcels Contracts, International Return Service, and Harmonization Service, 29522

Presidential Documents
ADMINISTRATIVE ORDERS
Government Agencies and Employees:
Benefits and Non-Discrimination, Extension and Review (Notice of June 17, 2009), 29393–29394

Railroad Retirement Board
NOTICES
Agency Information Collection Activities; Proposals, Submissions, and Approvals, 29522

Rural Utilities Service
NOTICES
Environmental Impact Statements; Availability, etc.:
Oglethorpe Power Corporation, Inc.; Public Scoping Meetings, 29464–29466

Science and Technology Policy Office
NOTICES
Charting the Course for Ocean Science in the United States for the Next Decade:
An Ocean Research Priorities Plan and Implementation Strategy; Update, 29523–29524

Securities and Exchange Commission
NOTICES
Meetings; Sunshine Act, 29524
Order of Suspension Trading:
Petro America Corp., 29524–29525
Self-Regulatory Organizations; Proposed Rule Changes:
Chicago Board Options Exchange, Inc., 29525–29526
Financial Industry Regulatory Authority, Inc., 29527–29529
Municipal Securities Rulemaking Board, 29526–29527

Small Business Administration
NOTICES
Disaster Declarations:
Alaska, 29523
Florida, 29522–29523

State Department
NOTICES
Meetings:
International Telecommunication Advisory Committee, 29529–29530

Substance Abuse and Mental Health Services Administration

NOTICES
Agency Information Collection Activities; Proposals, Submissions, and Approvals, 29487–29489, 29494–29495

Surface Mining Reclamation and Enforcement Office
NOTICES
Agency Information Collection Activities; Proposals, Submissions, and Approvals, 29511

Surface Transportation Board
NOTICES
Temporary Trackage Rights Exemption:
BNSF Railway Co.; Union Pacific Railroad Co., 29531

Textile Agreements Implementation Committee
See Committee for the Implementation of Textile Agreements

Transportation Department
See Federal Aviation Administration
See National Highway Traffic Safety Administration
See Pipeline and Hazardous Materials Safety Administration
See Surface Transportation Board

Treasury Department
See Alcohol and Tobacco Tax and Trade Bureau
NOTICES
Agency Information Collection Activities; Proposals, Submissions, and Approvals, 29531–29532
Privacy Act; Systems of Records, 29532–29536

U.S.–China Economic and Security Review Commission
NOTICES
Open Public Hearing, 29536–29537

Veterans Affairs Department
RULES
Collection of Debts Owed by Reason of Participation in a Benefits Program; CFR Correction, 29430
NOTICES
Agency Information Collection Activities; Proposals, Submissions, and Approvals, 29537–29539

Separate Parts In This Issue

Part II
Transportation Department, National Highway Traffic Safety Administration, 29542–29587

Reader Aids
Consult the Reader Aids section at the end of this page for phone numbers, online resources, finding aids, reminders, and notice of recently enacted public laws.

To subscribe to the Federal Register Table of Contents LISTSERV electronic mailing list, go to http://listserv.access.gpo.gov and select Online mailing list archives, FEDREGTOC-L, Join or leave the list (or change settings); then follow the instructions.

CFR PARTS AFFECTED IN THIS ISSUE

A cumulative list of the parts affected this month can be found in the Reader Aids section at the end of this issue.

3 CFR

Administrative Orders:

Memorandums:

Memo. of June 17, 2009 29393

27 CFR

9....29395
40....29401
41....29401
44....29401
45....29401

Proposed Rules:

40....29433
41....29433
44....29433
45....29433

32 CFR

706....29420

Proposed Rules:

199....29435

33 CFR

117....29422
165 (4 documents) 29422, 29423, 29425, 29428

Proposed Rules:

100....29436
146....29439
165....29447

38 CFR

1....29430

40 CFR

Proposed Rules:

52 (4 documents) 29450, 29451, 29452

42 CFR

Proposed Rules:

441....29453

49 CFR

Proposed Rules:

107....29456
575....29452

50 CFR

622....29430
660....29431

Proposed Rules:

17....29456

Federal Register
Vol. 74, No. 118
Monday, June 22, 2009

Presidential Documents

Title 3—

The President

Memorandum of June 17, 2009

Federal Benefits and Non-Discrimination

Memorandum for the Heads of Executive Departments and Agencies

Millions of hard-working, dedicated, and patriotic public servants are employed by the Federal Government as part of the civilian workforce, and many of these devoted Americans have same-sex domestic partners. Leading companies in the private sector are free to provide to same-sex domestic partners the same benefits they provide to married people of the opposite sex. Executive departments and agencies, however, may only provide benefits on that basis if they have legal authorization to do so. My Administration is not authorized by Federal law to extend a number of available Federal benefits to the same-sex partners of Federal employees. Within existing law, however, my Administration, in consultation with the Secretary of State, who oversees our Foreign Service employees, and the Director of the Office of Personnel Management, who oversees human resource management for our civil service employees, has identified areas in which statutory authority exists to achieve greater equality for the Federal workforce through extension to same-sex domestic partners of benefits currently available to married people of the opposite sex. Extending available benefits will help the Federal Government compete with the private sector to recruit and retain the best and the brightest employees.

I hereby request the following:

Section 1. *Extension of Identified Benefits.* The Secretary of State and the Director of the Office of Personnel Management shall, in consultation with the Department of Justice, extend the benefits they have respectively identified to qualified same-sex domestic partners of Federal employees where doing so can be achieved and is consistent with Federal law.

Sec. 2. *Review of Governmentwide Benefits.* The heads of all other executive departments and agencies, in consultation with the Office of Personnel Management, shall conduct a review of the benefits provided by their respective departments and agencies to determine what authority they have to extend such benefits to same-sex domestic partners of Federal employees. The results of this review shall be reported within 90 days to the Director of the Office of Personnel Management, who, in consultation with the Department of Justice, shall recommend to me any additional measures that can be taken, consistent with existing law, to provide benefits to the same-sex domestic partners of Federal Government employees.

Sec. 3. *Promoting Compliance with Existing Law Requiring Federal Workplaces to be Free of Discrimination Based on Non-Merit Factors.* The Office of Personnel Management shall issue guidance within 90 days to all executive departments and agencies regarding compliance with, and implementation of, the civil service laws, rules, and regulations, including 5 U.S.C. 2302(b)(10), which make it unlawful to discriminate against Federal employees or applicants for Federal employment on the basis of factors not related to job performance.

Sec. 4. *General Provisions.* (a) Nothing in this memorandum shall be construed to impair or otherwise affect:

(i) Authority granted by law or Executive Order to an agency, or the head thereof; or

(ii) Functions of the Director of the Office of Management and Budget relating to budgetary, administrative, or legislative proposals.

(b) This memorandum shall be implemented consistent with applicable law and subject to the availability of appropriations.

(c) This memorandum is not intended to, and does not, create any right or benefit, substantive or procedural, enforceable at law or in equity by any party against the United States, its departments, agencies, or entities, its officers, employees, or agents, or any other person.

Sec. 5. Publication. The Director of the Office of Personnel Management is hereby authorized and directed to publish this memorandum in the Federal Register.

THE WHITE HOUSE,
Washington, June 17, 2009

[FR Doc. E9–14737
Filed 6–19–09; 8:45 am]
Billing code 6325–01–P

Rules and Regulations

Federal Register
Vol. 74, No. 118
Monday, June 22, 2009

This section of the FEDERAL REGISTER contains regulatory documents having general applicability and legal effect, most of which are keyed to and codified in the Code of Federal Regulations, which is published under 50 titles pursuant to 44 U.S.C. 1510.

The Code of Federal Regulations is sold by the Superintendent of Documents. Prices of new books are listed in the first FEDERAL REGISTER issue of each week.

DEPARTMENT OF THE TREASURY

Alcohol and Tobacco Tax and Trade Bureau

27 CFR Part 9

[Docket No. TTB–2008–0007; T.D. TTB–77; Re: Notice No. 88]

RIN 1513–AB40

Establishment of the Upper Mississippi River Valley Viticultural Area (2007R–055P)

AGENCY: Alcohol and Tobacco Tax and Trade Bureau, Treasury.

ACTION: Final rule; Treasury decision.

SUMMARY: This Treasury decision establishes the 29,914-square mile ''Upper Mississippi River Valley'' viticultural area in portions of southeast Minnesota, southwest Wisconsin, northwest Illinois, and northeast Iowa. We designate viticultural areas to allow vintners to better describe the origin of their wines and to allow consumers to better identify wines they may purchase.

DATES: *Effective Date:* July 22, 2009.

FOR FURTHER INFORMATION CONTACT: Karen Welch, Regulations and Rulings Division, Alcohol and Tobacco Tax and Trade Bureau, 1310 G Street, NW., Washington, DC 20220; phone 202–927–0713.

SUPPLEMENTARY INFORMATION:

Background on Viticultural Areas

TTB Authority

Section 105(e) of the Federal Alcohol Administration Act (FAA Act), 27 U.S.C. 205(e), authorizes the Secretary of the Treasury to prescribe regulations for the labeling of wine, distilled spirits, and malt beverages. The FAA Act requires that these regulations, among other things, prohibit consumer deception and the use of misleading statements on labels, and ensure that labels provide the consumer with adequate information as to the identity and quality of the product. The Alcohol and Tobacco Tax and Trade Bureau (TTB) administers the regulations promulgated under the FAA Act.

Part 4 of the TTB regulations (27 CFR part 4) allows the establishment of definitive viticultural areas and the use of their names as appellations of origin on wine labels and in wine advertisements. Part 9 of the TTB regulations (27 CFR part 9) contains the list of approved viticultural areas.

Definition

Section 4.25(e)(1)(i) of the TTB regulations (27 CFR 4.25(e)(1)(i)) defines a viticultural area for American wine as a delimited grape-growing region distinguishable by geographical features, the boundaries of which have been recognized and defined in part 9 of the regulations. These designations allow vintners and consumers to attribute a given quality, reputation, or other characteristic of a wine made from grapes grown in an area to its geographical origin. The establishment of viticultural areas allows vintners to describe more accurately the origin of their wines to consumers and helps consumers to identify wines they may purchase. Establishment of a viticultural area is neither an approval nor an endorsement by TTB of the wine produced in that area.

Requirements

Section 4.25(e)(2) of the TTB regulations outlines the procedure for proposing an American viticultural area and provides that any interested party may petition TTB to establish a grape-growing region as a viticultural area. Section 9.3(b) of the TTB regulations requires the petition to include—

- Evidence that the proposed viticultural area is locally and/or nationally known by the name specified in the petition;
- Historical or current evidence that supports setting the boundary of the proposed viticultural area as the petition specifies;
- Evidence relating to the geographical features, such as climate, soils, elevation, and physical features, that distinguish the proposed viticultural area from surrounding areas;
- A description of the specific boundary of the proposed viticultural area, based on features found on United States Geological Survey (USGS) maps; and
- A copy of the appropriate USGS map(s) with the proposed viticultural area's boundary prominently marked.

Upper Mississippi River Valley Petition

The Upper Mississippi River Valley AVA Committee submitted a petition to TTB proposing the establishment of the 29,914-square mile Upper Mississippi River Valley American viticultural area in portions of southeast Minnesota, southwest Wisconsin, northwest Illinois, and northeast Iowa. A map submitted with the petition indicates that the vineyards within the proposed viticultural area are geographically dispersed throughout the area. The established 28,000-acre (43.75-square mile) Lake Wisconsin viticultural area (27 CFR 9.146) located in Columbia and Dane Counties, Wisconsin, lies entirely within the eastern portion of the proposed viticultural area.

As indicated on the USGS maps included with the petition, the Mississippi River runs north-to-south in the approximate middle of the proposed viticultural area. St. Paul, Minnesota, is the northernmost point of the proposed viticultural area and its southernmost point is north of Moline, Illinois. According to the petitioner, the Wisconsin ice age and the effects of glaciation on the region provide a basis for most of the distinguishing features of the proposed viticultural area.

We summarize below the supporting evidence submitted with the petition.

Name Evidence

According to the petitioner, the Upper Mississippi River Wildlife and Fish Refuge Act of 1924 provides a historical perspective in support of the ''Upper Mississippi River Valley'' name and its boundaries. The Act established what later would be known as the Upper Mississippi River National Wildlife and Fish Refuge, an area that Congress created to reflect the unique habitat of the Paleozoic Plateau (see ''Regional Land Management'' below). The petition documentation includes references citing the Upper Mississippi River Valley name relevant to the Upper Mississippi River National Wildlife and Fish Refuge. The petitioner documented the use of the Upper Mississippi River Valley name in Federal and public Web sources.

A page on the USGS Web site, ''Status and Trends of the Nation's Biological Resources, Part 2, Regional Trends of Biological Resources,'' (*http://biology.usgs.gov/s+t/SNT/index.htm*) includes a section on the Mississippi River. The ''Geography, Geological History, and Human Development'' subsection explains the glacial history of the Upper Mississippi River. The Wisconsin Glacier retreating into Canada and melting is described as follows: ''The Upper Mississippi River valley then began filling with glacial outwash, mainly sand and gravel, a process that is still under way * * *. The Upper Mississippi River valley widens considerably where it joins the Minnesota River, 13 kilometers downstream from St. Anthony Falls * * *.'' The petitioner explained that at St. Anthony Falls the Mississippi River headwaters join the northern boundary of the Upper Mississippi River Valley.

Regarding the history of the valley, a page on the National Park Service Web site (*http://www.nps.gov/efmo/parks/hist.htm*) states that ''The Upper Mississippi River valley was not only the home of prehistoric Indians for thousands of years, but also has been the scene for over 300 years of recorded human history as well. Early explorers found the area along the big river occupied by groups of Native Americans.''

The May 6, 1997, NOVA broadcast entitled ''Flood!'' described the 1993 flooding of the Upper Mississippi River Valley. It included an interview with Lynn House of Quincy, Illinois. She and her husband own 1,400 acres along the Mississippi River. Mrs. House said that during the flooding of 1993 her husband exclaimed, ''Levees are going to break like guitar strings, up and down the Upper Mississippi River Valley!''

''Twelve Millennia: Archaeology of the Upper Mississippi River Valley,'' by James Theler and Robert Boszhardt (2003, Iowa State University Press), provides an overview of the 12,000-year-old human past of the Driftless Area of the Upper Mississippi River Valley, according to a description of the book on *http://www.amazon.com.* The Driftless Area extends from Rock Island Rapids, in the Moline-Rock Island, Illinois, area, north to St. Anthony Falls in the Minneapolis-St. Paul, Minnesota, area. (It comprises areas that were excluded from glacial transport of sediments and other materials.) The petitioner noted that the Driftless Area roughly corresponds to the boundary of the proposed Upper Mississippi River Valley viticultural area.

The ''Upper Mississippi River Valley: A Personal Web Site and Guide,'' at *http://soli.inav.net/~atkinson/k/UpperMissRiver.htm,* has scenic photographs and information on local tourism, parks and natural areas, cities and towns, books, and shopping in the Upper Mississippi River Valley.

Boundary Evidence

The proposed Upper Mississippi River Valley viticultural area covers 29,914 square miles, averaging 120 miles east to west and 225 miles north to south, according to the USGS maps provided with the petition. The headwaters of the Mississippi River start at Lake Itasca in northwest Minnesota and continue to St. Anthony Falls in Minneapolis-St. Paul, Minnesota, the petitioner explained.

According to the USGS maps included with the petition, the proposed northern boundary of the Upper Mississippi River Valley viticultural area coincides with the landmark St. Anthony Falls. The proposed southern portion of the boundary extends west from north of Moline, Illinois, at Lock and Dam 14 on the Mississippi River, to Tiffin, Iowa. The USGS maps show that the proposed easternmost point of the proposed boundary is in Janesville, Wisconsin, and the westernmost point is along Minnesota State Highway 56 in Coates, Minnesota, south of St. Paul.

To define the proposed boundary of the Upper Mississippi River Valley viticultural area, the petitioner provided a written boundary description and USGS State maps for Minnesota, Wisconsin, Illinois, and Iowa. The petitioner also provided Anamosa and Marshalltown, Iowa, regional maps, which show highways in more detail.

States and Counties

The table below lists the counties in four States that are either totally or partially within the boundary of the proposed Upper Mississippi River Valley viticultural area.

COUNTIES IN THE PROPOSED UPPER MISSISSIPPI RIVER VALLEY VITICULTURAL AREA

Minnesota	Wisconsin	Illinois	Iowa
1. Dakota	Buffalo	Carroll	Allamakee
2. Dodge	Clark	Jo Davies	Black Hawk
3. Fillmore	Columbia	Lee	Bremer
4. Goodhue	Crawford	Ogle	Buchanan
5. Houston	Dane	Rock Island	Cedar
6. Mower	Dunn	Stephenson	Chickasaw
7. Olmstead	Eau Claire	Whiteside	Clayton
8. Wabasha	Grant	Winnebago	Clinton
9. Washington	Green		Delaware
10. Winona	Iowa		Dubuque
11.	Jackson		Fayette
12.	Juneau		Howard
13.	La Crosse		Jackson
14.	La Fayette		Johnson
15.	Monroe		Jones
16.	Pepin		Linn
17.	Pierce		Scott.
18.	Richland		Winneshiek
19.	Rock.		
20.	Sauk.		
21.	St. Croix.		
22.	Trempealeau.		
23.	Vernon.		

Regional History

The petitioner explained that European explorers Jacques Marquette and Louis Joliet first entered the Upper Mississippi River Valley on June 17, 1673. The Louisiana Purchase and the resolution of the Black Hawk War in 1832 served to open the area to settlers from the eastern States.

According to the petitioner, native grape varieties in the Upper Mississippi River Valley thrived in the late 19th and early 20th centuries. In 1919, Iowa produced the sixth largest grape crop in the United States. However, prohibition, severe freezes, droughts, and wind drift from some crop sprays caused native viticulture to dwindle throughout much of the 20th century within the proposed viticultural area. The disease- and cold-resistant French-American grape hybrids and crop spray improvements developed during the 20th century resulted in renewed confidence in grape growing as an industry in the Upper Mississippi River Valley region.

Regional Land Management

The petitioner explained that two management areas, Major Land Resource Area (MLRA) 105 and the Driftless Area Initiative (DAI), help to define the proposed viticultural area. The United States Department of Agriculture, Natural Resources Conservation Service (NRCS), oversees the management of MLRAs. MLRA 105 comprises the Paleozoic Plateau, which more recent glacial incursions surrounded, bypassed, and preserved as a rugged, bedrock-controlled environment with soils lacking the glacial drift of areas outside the MLRA boundary. Thus, it encompasses a vast area that has similar soils, climate, water resources, and land uses. It includes portions of four States: Southeastern Minnesota, southwestern Wisconsin, northeastern Iowa, and northwestern Illinois. It roughly corresponds to the boundary of, but is 4 percent smaller than, the proposed viticultural area.

The DAI, according to the petitioner, comprises the Midwest Driftless Area with its atypical lack of glacial till. It was created and is managed conjointly by the Resource Conservation and Development Councils under the NRCS in the four-State area. The DAI is mandated to conserve land, water, and habitat resources that are strongly influenced by the dramatic landscape. In some areas the DAI boundary slightly extends beyond the MLRA 105 boundary to more fully capture included watersheds and transitional areas of increasing glacial drift.

The petitioner used State and interstate highways to define the boundary of the proposed Upper Mississippi River Valley viticultural area. The highways are marked on the USGS maps and form a boundary that comprises these important, interrelated components of the proposed viticultural area: The Upper Mississippi River National Wildlife and Fish Refuge, the Paleozoic Plateau, MLRA 105, the Driftless Area, and the Upper Mississippi River watershed.

According to the petitioner, the proposed Upper Mississippi River Valley viticultural area includes steep-sided cliffs, bluffs, deeply entrenched stream valleys, and karst features. It has more hills, ridges, areas of thinner glacial till, and thus better drainage for grapes than areas outside the proposed boundary. Outside the proposed boundary, the topography consists of smoother landforms of unconsolidated materials, glacial drift that is thicker than that within the proposed boundary, and alluvium.

The petitioner explained that how the Mississippi River is divided varies among individuals, commercial entities, and public agencies. The petitioner noted that ''* * * the Mississippi River, sometimes in conjunction with its valley, is discussed as having upper and lower segments.'' Others, however, refer to the upper, middle, and lower Mississippi.

The petitioner explained further that the southern boundary line of the proposed Upper Mississippi River Valley viticultural area correlates with the southern border of the Upper Mississippi Fish and Wildlife Refuge established in 1924. The Wapsipinicon River watershed closely parallels the eastern and southern boundary lines of the proposed viticultural area. Interstate Highway 80, which serves as a portion of the southern boundary line of the proposed viticultural area, approximates the Wapsipinicon River watershed boundary line.

The petitioner explained that the southern boundary of the proposed viticultural area correlates with the southern boundary of the U.S. Department of Agriculture Hardiness Zone 4b. Also, based on research information provided by Professor Paul Domoto, PhD, Department of Horticulture, Iowa State University, the average minimum winter temperatures within the proposed Upper Mississippi River Valley viticultural area are −15 to −20 degrees F. To the south, they are −10 to −15 degrees F.

According to the petitioner, the southern portion of the boundary of the proposed viticultural area continues for a few miles south of the established southern portion of the boundary of MLRA 105. Also, the western portion of the boundary of the proposed viticultural area includes a portion of the adjacent MLRA 104 to encompass the entire watershed of the Wapsipinicon River, a primary tributary of the Upper Mississippi River.

Lake Wisconsin AVA (27 CFR 9.146)

The proposed Upper Mississippi River Valley viticultural area includes the established 28,000-acre Lake Wisconsin viticultural area, the petitioner explained. The Wisconsin River, which forms Lake Wisconsin, is a major tributary of the Upper Mississippi River.

The petitioner stated that the Lake Wisconsin viticultural area is comprised of soil orders and Driftless Area topography similar to those of the proposed Upper Mississippi River Valley viticultural area. Regarding the Lake Wisconsin viticultural area, which has a few glacial deposits at the higher elevations, according to the petitioner, geologists view that area as a transitional glacial area. (The original Lake Wisconsin viticultural area (T.D. ATF–352, 59 FR 537, January 5, 1994) describes the area as a transitional zone between the glaciated topography to its east and the unglaciated, driftless topography to its west.)

Distinguishing Features

The petitioner asserted that the distinguishing features of the proposed Upper Mississippi River Valley viticultural area include its geology, unglaciated topography, climate, soils, and hydrology. The Wisconsin ice age affected the region and provided a basis for most of the distinguishing features of the proposed viticultural area, specifically topography, soils, and hydrology.

Geology

The petitioner explained that a significant event in the geologic history of the proposed Upper Mississippi River Valley viticultural area was the impact of the massive Wisconsin Glacier during the Wisconsin ice age. The glacier, which had lobes in Minnesota and Iowa, started melting 15,000 years ago and retreated northward toward Canada. The resulting glacial water flows combined with the Glacial St. Croix River and drained Glacial Lake Duluth, known now as Lake Superior. The relatively sediment-free drainage of Glacial Lake Duluth helped carve the Upper Mississippi River Valley channel to a depth of about 250 meters, or 820 feet. Eventually, alluvial deposits started

refilling the river channel, beginning a process that has continued into modern times.

According to the petitioner, the development of the Upper Mississippi River impacted the regional topography and landforms. The tributary valleys include terraces, older flood plain deposits, and entrenched and hanging meanders (streams). These features show the complexity of the alluvial history and river development associated with glacial melting and drainage diversions.

The petitioner stated that surface materials, especially along the Paleozoic Plateau, date to 100,000 years in age. The younger materials that are outside the proposed boundary and that are largely the result of glacial erosion and glacial till date to 10,000 years in age, or 90,000 years younger than the surface materials on the Paleozoic Plateau.

The petitioner explained that streams in the proposed Upper Mississippi River Valley viticultural area cut deep dissections through the inclined landforms and exposed Paleozoic rock. The exposed rock, which varies in age from 350 to 600 million years old, is predominantly dolomite, limestone, and sandstone.

Topography

The Driftless Area of the Upper Mississippi River Valley has a unique topography and subsurface structure because a direct glacial incursion did not occur in that area during the most recent Wisconsin ice age, the petitioner explained. Consequently, the topography does not have substantial amounts of materials deposited by glaciers. The petitioner noted that the proposed boundary divides the rugged, dissected, bedrock-controlled landscapes within the Upper Mississippi River Valley from the gently rolling landscapes that have lower relief and glaciated, erosional surfaces and that are outside the valley.

Bedrock control in the proposed area, the petitioner explained, refers to the entrenched valleys and karst that constitute an integrated drainage network. The karst topography of the proposed viticultural area includes underground caves, sinkholes, springs, and subsurface caverns. According to the petitioner, rivers and underground water flows are general features throughout the proposed Upper Mississippi River Valley viticultural area, which has none of the natural lakes that direct glacial movement normally creates. Outside the boundary of the proposed Upper Mississippi River Valley viticultural area, the petitioner continued, the topography consists of unconsolidated, heavily dissected soil material along substantial deposits of glacial materials on smooth, rolling hills.

The elevations of the Upper Mississippi River Valley viticultural area, the petitioner stated, range from 660 feet on valley floors to 1,310 feet on high ridges. Outside the boundary of the proposed viticultural area, elevations average 250 feet higher to the northwest and 165 feet lower to the southeast.

The petitioner explained that north of the boundary of the proposed Upper Mississippi River Valley viticultural area loess covers the level-to-rolling till plains. Elevations change little on the plains.

East of the boundary of the proposed Upper Mississippi River Valley viticultural area, the landscape is dominated by a glaciated plain that has belts of morainic hills, ridges, and washout terraces. (TTB notes that morainic hills are accumulations of soil and stones that glacial activity has left.) Also, elevations generally vary several feet, except for the 80- to 330-foot-high moraines, drumlins, and bedrock escarpments.

South of the boundary of the proposed Upper Mississippi River Valley viticultural area are rolling, hilly, loess-covered plains and some broad, level uplands in the southwest region. Elevations there also generally vary by only several feet, except on the upland flats, where elevation changes up to 200 feet.

West of the boundary of the proposed Upper Mississippi River Valley viticultural area the landscape is a nearly level to gently sloping till plain. Elevations generally vary by several feet.

Soils

The soils common to the proposed Upper Mississippi River Valley viticultural area, the petitioner stated, are stony or rocky soils on steep slopes. The petitioner provided comparative soil data for the proposed viticultural area and the surrounding regions. The data, which show differences and similarities of the soils, are listed in the table below.

DIFFERENCES AND SIMILARITIES OF THE SOILS WITHIN AND OUTSIDE OF THE UPPER MISSISSIPPI RIVER VALLEY

Location *	Dominant soil orders	Temperature and moisture regimes	Mineralogy, soil depth, drainage, and texture
Within	Alfisols, Entisols, and Mollisols.	Mesic, Udic	Mixed mineralogy, moderately deep to very deep; well drained or moderately well drained; loamy with little clay.
North Outside	Entisols, Alfisols, Histosols, Spodosols, and Inceptisols.	Frigid, Udic	Mixed mineralogy; ≤moderately deep to very deep; well drained to poorly drained; sandy to loamy.
East Outside	Alfisols, Histosols, and Mollisols.	Mesic, Udic	Mixed mineralogy; very deep; well drained to poorly drained; silty, loamy, or clayey.
South Outside	Mollisols, Alfisols, Entisols, and Inceptisols.	Mesic, Udic	Mixed mineralogy; very deep; well drained to poorly drained; loamy.
West Outside	Mollisols and Alfisols	Mesic, Udic	Mixed mineralogy; very deep; well drained to very poorly drained; loamy.

* In relation to the proposed Upper Mississippi River Valley viticultural area.

The petitioner explained that within the boundary of the proposed Upper Mississippi River Valley viticultural area, Argiudolls (Tama, Dodgeville, Richwood, and Dakota series) and Hapludolls (Muscatine series) are on nearly level to gently sloping benches and broad ridge tops. Hapludolls (Frontenac, Broadale, and Bellechester series) are on steep slopes bordering major valleys. Well drained Udifluvents (Dorchester, Chaseburg, and Arenzville series) are along stream bottoms. Quartzipsamments (Boone series) are on steep slopes. Also, Udipsamments (Plainfield and Gotham series) are on nearly level stream benches.

Overall, the soils on steep hills and ridges and those formed in comparatively thinner glacial till within the proposed viticultural area have good

natural drainage for grapes. Although they have much clay, generally they have access to water and in numerous areas are on south-facing slopes, creating microclimates beneficial to grapes. The soils outside the proposed boundary generally formed in deeply dissected, thicker glacial drift and alluvium over unconsolidated materials on smooth, gently rolling landscapes. After precipitation they require tile drainage because of glacial pools and the generally lower relief.

Climate

The petitioner stated that steep slopes, bluffs, numerous rock outcrops, waterfalls and rapids, sinkholes, springs, and entrenched stream valleys combine to create multiple microclimates within the proposed Upper Mississippi River Valley viticultural area. Also, the combination of microclimates and diverse settings supports varied flora and fauna communities not found outside the boundary of the proposed viticultural area.

The petitioner provided temperature and precipitation data for the proposed Upper Mississippi River Valley viticultural area and its surrounding regions. Those climatic differences are presented in the table below.

TEMPERATURE AND PRECIPITATION FOR WITHIN AND OUTSIDE OF THE UPPER MISSISSIPPI RIVER VALLEY

Location *	Annual average temperature range (degrees fahrenheit)	Annual average frost-free period (days)	Annual average precipitation (inches)	Amount of annual average precipitation received during the growing season
Within	42–50	145–205	30–38	⅔ or more.
North Outside	40–46	135–180	27–33	Most.
East Outside	43–48	150–190	30–38	Most.
South Outside	46–51	170–205	33–38	Most.
West Outside	44–50	160–195	29–37	More than ⅔.

* In relation to the proposed Upper Mississippi River Valley viticultural area.

According to petition data, the proposed Upper Mississippi River Valley viticultural area has, on average, a warmer annual temperature range than that of the surrounding locations to the north and east. In the areas to the south and west, the annual average temperature range is several degrees higher than that in the proposed viticultural area.

The annual average frost-free period within the proposed Upper Mississippi River Valley viticultural area is longer than that in the area to the north and shorter than that in the area to the south, according to petition data. The range of the annual frost-free period in the proposed viticultural area is greater than in the neighboring areas to the east and west.

The petition data show the precipitation range of the proposed Upper Mississippi River Valley viticultural area as compared to that in the surrounding areas. The annual average precipitation range is higher in the proposed Upper Mississippi River Valley viticultural area than in the area to its north. The areas to the south, west, and east receive approximately the same annual average precipitation, in the same pattern, as the proposed viticultural area. The precipitation during the growing season is greater in the areas to the north, south, and east than in the proposed viticultural area, and approximately the same in the area to the west of the proposed viticultural area.

Hydrology

The petitioner provided hydrological data that show the growing conditions, including the relationship between the soils and the hydrological characteristics of the proposed Upper Mississippi River Valley viticultural area and its surrounding regions. The hydrological data are presented in the table below.

HYDROLOGICAL DATA AND DRAINAGE NEEDED FOR CROP PRODUCTION WITHIN AND OUTSIDE THE UPPER MISSISSIPPI RIVER VALLEY

Location*	Ground water	Other resources	Soils and crop production
Within	Abundant in valleys and variable on uplands.	Use of springs, streams, and farm ponds, and extensive use of bedrock aquifers.	Minimal need for a tile drainage system in soils.
Outside North	Abundant in deep glacial drift deposits, but scarce in thin ones.	Lakes and streams	Artificial drainage required for soils on lowlands.
Outside East	Abundant in areas underlain by drift.	Inland lakes, streams, and sandstone and limestone bedrock formations below the glacial drift.	Artificial drainage required for fine-textured soils with poor drainage.
Outside South	Abundant in areas of glacial drift	Perennial streams and the Mississippi River.	Favorable precipitation pattern; drainage not required.
Outside West	Adequate	Extensive use of bedrock aquifers	Artificial drainage required for the seasonal high water table.

* In relation to the proposed Upper Mississippi River Valley viticultural area.

In most years the moderate precipitation of the proposed Upper Mississippi River Valley viticultural area, the petitioner explained, is usually adequate for both the human population and agriculture. Ground water, the petitioner stated, remains abundant in outwash deposits of valleys, but on uplands it varies in quantity. Bedrock aquifers also provide extensive ground water resources within the proposed

viticultural area and in the area to its west.

Notice of Proposed Rulemaking and Comments Received

TTB published Notice No. 88 regarding the proposed Upper Mississippi River Valley viticultural area in the **Federal Register** (73 FR 46842) on August 12, 2008. In that notice, TTB invited comments by October 14, 2008, from all interested persons. We specifically solicited comments on the sufficiency and accuracy of the name, climatic, boundary, and other required information submitted in support of the petition, as well as if the name and distinguishing geographical feature evidence is sufficient to warrant this new viticultural area that entirely encompasses the existing Lake Wisconsin viticultural area. We received one comment in response to Notice No. 88, and that comment supported the establishment of the Upper Mississippi River Valley viticultural area.

TTB Finding

After careful review of the petition and the comment received, TTB finds that the evidence submitted supports the establishment of the proposed viticultural area. Therefore, under the authority of the Federal Alcohol Administration Act and part 4 of our regulations, we establish the 29,914-square mile ''Upper Mississippi River Valley'' viticultural area in portions of southeast Minnesota, southwest Wisconsin, northwest Illinois, and northeast Iowa, effective 30 days from the publication date of this document.

As stated above, the proposed Upper Mississippi River Valley AVA contains multiple microclimates, and none of the natural lakes that direct glacial movement normally creates. The Lake Wisconsin viticultural area, established in 1994, contains some geographical features similar to those of the proposed AVA, such as annual average frost-free period, elevation, and a mean precipitation of 29 inches, just 1 inch less than that of the proposed Upper Mississippi River Valley AVA. At the same time, the Lake Wisconsin AVA is recognized as benefitting from the microclimate effects of the lower Wisconsin River Valley. The river moderates winter temperatures and air circulation within the river valley and helps prevent cold air accumulation and frost pockets from forming in the vineyards. In the summer, the river valley and limestone bluffs along the river's edge serve to channel air currents and increase air circulation, thus protecting the vineyards from mildew and rot in hot, humid weather. Additionally, the Lake Wisconsin AVA is recognized as a transitional zone from unglaciated to glaciated topography, and the soils within the Lake Wisconsin AVA contain some glacial till. Accordingly, although the Lake Wisconsin viticultural area shares some of the characteristics of the proposed AVA, TTB believes that the differences justify the continued recognition of Lake Wisconsin as a distinct viticultural area within the proposed Upper Mississippi River Valley viticultural area.

Boundary Description

See the narrative boundary description of the viticultural area in the regulatory text published at the end of this document.

Maps

The maps for determining the boundary of the viticultural area are listed below in the regulatory text.

Impact on Current Wine Labels

Part 4 of the TTB regulations prohibits any label reference on a wine that indicates or implies an origin other than the wine's true place of origin. With the establishment of this viticultural area and its inclusion in part 9 of the TTB regulations, its name, ''Upper Mississippi River Valley,'' is recognized under 27 CFR 4.39(i)(3) as a name of viticultural significance. The text of the new regulation clarifies this point.

Once this final rule becomes effective, wine bottlers using ''Upper Mississippi River Valley'' in a brand name, including a trademark, or in another label reference as to the origin of the wine, will have to ensure that the product is eligible to use the viticultural area's full name as an appellation of origin.

For a wine to be labeled with a viticultural area name or with a brand name that includes a viticultural area name or other term identified as being viticulturally significant in part 9 of the TTB regulations, at least 85 percent of the wine must be derived from grapes grown within the area represented by that name or other term, and the wine must meet the other conditions listed in 27 CFR 4.25(e)(3). If the wine is not eligible for labeling with the viticultural area name or other viticulturally significant term and that name or term appears in the brand name, then the label is not in compliance and the bottler must change the brand name and obtain approval of a new label. Similarly, if the viticultural area name or other viticulturally significant term appears in another reference on the label in a misleading manner, the bottler would have to obtain approval of a new label. Accordingly, if a previously approved label uses the name ''Upper Mississippi River Valley'' for a wine that does not meet the 85 percent standard, the previously approved label will be subject to revocation, upon the effective date of the establishment of the ''Upper Mississippi River Valley'' viticultural area.

Different rules apply if a wine has a brand name containing a viticultural area name or other term of viticultural significance that was used as a brand name on a label approved before July 7, 1986. See 27 CFR 4.39(i)(2) for details.

Regulatory Flexibility Act

We certify that this regulation will not have a significant economic impact on a substantial number of small entities. This regulation imposes no new reporting, recordkeeping, or other administrative requirement. Any benefit derived from the use of a viticultural area name is the result of a proprietor's efforts and consumer acceptance of wines from that area. Therefore, no regulatory flexibility analysis is required.

Executive Order 12866

This rule is not a significant regulatory action as defined by Executive Order 12866. Therefore, it requires no regulatory assessment.

Drafting Information

Karen Welch of the Regulations and Rulings Division drafted this notice.

List of Subjects in 27 CFR Part 9

Wine.

The Regulatory Amendment

■ For the reasons discussed in the preamble, we amend 27 CFR, chapter I, part 9, as follows:

PART 9—AMERICAN VITICULTURAL AREAS

■ 1. The authority citation for part 9 continues to read as follows:

Authority: 27 U.S.C. 205.

Subpart C—Approved American Viticultural Areas

■ 2. Subpart C is amended by adding § 9.216 to read as follows:

§ 9.216 Upper Mississippi River Valley.

(a) *Name.* The name of the viticultural area described in this section is ''Upper Mississippi River Valley''. For purposes of part 4 of this chapter, ''Upper Mississippi River Valley'' is a term of viticultural significance.

(b) *Approved maps.* The six United States Geological Survey topographic maps used to determine the boundary of the Upper Mississippi River Valley viticultural area are titled:

(1) State of Minnesota, scale 1:500,000; compiled in 1963; edition of 1985;

(2) State of Wisconsin, scale 1:500,000; compiled in 1966; edition of 1984;

(3) State of Illinois, scale 1:500,000; compiled in 1970; edition of 1987;

(4) State of Iowa, scale 1:500,000; compiled in 1965; edition of 1984;

(5) Anamosa, Iowa, 1:100,000 scale; edited 1984; and

(6) Marshalltown, Iowa, 1:100,000 scale; edited 1984.

(c) *Boundary.* The Upper Mississippi River Valley viticultural area is located in portions of southeast Minnesota, southwest Wisconsin, northwest Illinois, and northeast Iowa. The boundary of the Upper Mississippi River Valley viticultural area is as described below:

(1) The beginning point is on the State of Minnesota map at the intersection of Interstate Highways 94 and 494 (beltway), east of St. Paul at Oakbury in Washington County. From the beginning point, proceed east on Interstate 94, crossing over Lake St. Croix and onto the State of Wisconsin map at St. Croix County, and then continuing through Dunn County to Eau Claire County, to the intersection of Interstate Highway 94 with Wisconsin State Highway 85, southwest of the City of Eau Claire; then

(2) Proceed northeast on Wisconsin State Highway 85 toward the City of Eau Claire to U.S. Highway 12; then

(3) Proceed southeast on U.S. Highway 12 into Jackson County and passing through Clark County, to Interstate Highway 94 at Black River Falls; then

(4) Proceed southeast on Interstate Highway 94 into Monroe County to Interstate Highway 90, east of the Fort McCoy Military Reservation; then

(5) Proceed southeast on Interstate Highway 90 through Juneau, Sauk, Columbia, Dane, and Rock Counties, crossing onto the State of Illinois map at Winnebago County to U.S. Highway 20 at Cherry Valley; then

(6) Proceed west on U.S. Highway 20 to Illinois State Highway 2, west of the Rock River; then

(7) Proceed southwest on Illinois State Highway 2, passing through Ogle County and into Lee County, to Illinois State Highway 26 at Dixon; then

(8) Proceed south on Illinois State Highway 26 to Illinois State Highway 5 (which has been redesignated as Interstate Highway 88 on contemporary maps of Illinois); then

(9) Proceed southwest on Illinois State Highway 5 (Interstate Highway 88), passing through Whiteside County and into Rock Island County, to Interstate Highway 80 at Barstow; then

(10) Proceed generally northwest on Interstate Highway 80, crossing the Mississippi River, onto the State of Iowa map at Scott County, and continuing west-northwest through Cedar County and into Johnson County to the intersection of Interstate Highways 80 and 380 at Tiffin; then

(11) Proceed north-northwest on Interstate Highway 380 into Linn County and Cedar Rapids on the State of Iowa map. Then using the Anamosa map, followed by the Marshalltown map, follow Interstate Highway 380, labeled ''Under Construction'' on the Anamosa map, northwest through Benton and Buchanan Counties to Black Hawk County, to U.S. Highway 20, southeast of Waterloo and Raymond; then

(12) Using the State of Iowa map, proceed west-northwest on U.S. Highway 20 to Waterloo and U.S. Highway 63; then

(13) Proceed north on U.S. Highway 63 through Bremer, Chicksaw, and Howard Counties, skirting the Upper Iowa River at Chester, and crossing onto the State of Minnesota map at Fillmore County, to Minnesota State Highway 56; then

(14) Proceed northwest and northerly on Minnesota State Highway 56 through Mower, Dodge, and Goodhue Counties to Dakota County, where it joins with State Highway 52 on commercial maps, to Interstate Highway 494 (beltway), south of St. Paul; then

(15) Follow Interstate Highway 494 (beltway) northeast into Washington County, returning to the beginning point.

Signed: April 6, 2009.

John J. Manfreda,

Administrator.

Approved: May 3, 2009.

Timothy E. Skud,

Deputy Assistant Secretary (Tax, Trade, and Tariff Policy).

[FR Doc. E9–14574 Filed 6–19–09; 8:45 am]

BILLING CODE 4810–31–P

DEPARTMENT OF THE TREASURY

Alcohol and Tobacco Tax and Trade Bureau

27 CFR Parts 40, 41, 44, and 45

[Docket No. TTB–2009–0002; T.D. TTB–78; Re: Notice No. 95]

RIN 1513–AB72

Implementation of Statutory Amendments Requiring the Qualification of Manufacturers and Importers of Processed Tobacco and Other Amendments Related to Permit Requirements, and the Expanded Definition of Roll-Your-Own Tobacco

AGENCY: Alcohol and Tobacco Tax and Trade Bureau, Treasury.

ACTION: Temporary rule; Treasury decision.

SUMMARY: This temporary rule amends the Alcohol and Tobacco Tax and Trade Bureau regulations to implement certain changes made to the Internal Revenue Code of 1986 by the Children's Health Insurance Program Reauthorization Act of 2009. The principal changes involve permit and related requirements for manufacturers and importers of processed tobacco and an expansion of the definition of roll-your-own tobacco. We also are soliciting comments from all interested parties on these amendments through a notice of proposed rulemaking published elsewhere in this issue of the **Federal Register**.

DATES: *Effective Dates:* This temporary rule is effective June 22, 2009, through June 22, 2012.

FOR FURTHER INFORMATION CONTACT: Amy R. Greenberg, Regulations and Rulings Division, Alcohol and Tobacco Tax and Trade Bureau (202–927–8210).

SUPPLEMENTARY INFORMATION:

TTB Authority

Chapter 52 of the Internal Revenue Code of 1986 (IRC) sets forth the Federal excise tax and related provisions that apply to manufacturers and importers of tobacco products and cigarette papers and tubes and to export warehouse proprietors who hold such products, upon which tax has not been paid, pending export. Section 5702(c) of the IRC (26 U.S.C. 5702(c)) defines tobacco products as cigars, cigarettes, smokeless tobacco, pipe tobacco, and roll-your-own tobacco. Each of these terms is also separately defined in section 5702.

Sections 5712 and 5713 of the IRC (26 U.S.C. 5712 and 5713) require manufacturers and importers of tobacco products and export warehouse

proprietors to obtain a permit to engage in such businesses. Section 5712 also allows for the promulgation of regulations to prescribe minimum manufacturing and activity requirements for such permittees. Sections 5721, 5722, and 5741 of the IRC (26 U.S.C. 5721, 5722, and 5741) authorize the promulgation of regulations to require inventories, reports, and recordkeeping, respectively.

Regulations implementing the provisions of chapter 52 of the IRC are contained in 27 CFR parts 40 (manufacture of tobacco products and cigarette papers and tubes), 41 (importation of tobacco products and cigarette papers and tubes), 44 (exportation of tobacco products and cigarette papers and tubes, without payment of tax, or with drawback of tax), and 45 (removal of tobacco products and cigarette papers and tubes, without payment of tax, for use of the United States). These regulations are administered by the Alcohol and Tobacco Tax and Trade Bureau (TTB).

Children's Health Insurance Program Reauthorization Act of 2009

On February 4, 2009, President Obama signed into law the Children's Health Insurance Program Reauthorization Act of 2009, Pub. L. 111–3, 123 Stat. 8 (''the Act'').

Section 701 of the Act amended the IRC to increase the Federal excise tax rates on tobacco products and cigarette papers and tubes. Section 701 also imposed a floor stocks tax on such articles held for sale on the effective date of the tax rate increases (April 1, 2009). On March 31, 2009, TTB published in the **Federal Register** (74 FR 14479) a temporary rule to amend the TTB regulations to reflect the section 701 changes.

Section 702 of the Act included amendments to the IRC to extend permit, inventory, reporting, and recordkeeping requirements to manufacturers and importers of processed tobacco even though such processed tobacco is not subject to excise tax under the IRC. Section 702 of the Act also amended the definition of ''roll-your-own tobacco'' generally to include cigar wrapper and filler. This document amends the TTB regulations to reflect these changes made by section 702 of the Act.

Regulation of Manufacturers and Importers of Processed Tobacco

The Act amended sections 5712 and 5713 of the IRC by adding references to ''processed tobacco'' after the words ''tobacco products,'' thereby requiring manufacturers and importers of processed tobacco, like manufacturers and importers of tobacco products, to apply for and obtain a permit before commencing such business. In addition, the Act amended section 5702 of the IRC by adding a new subsection (p) to define ''manufacturer of processed tobacco.'' Under this new definition, a manufacturer of processed tobacco is any person who processes any tobacco other than tobacco products; however, under the statutory definition the processing of tobacco does not include the farming or growing of tobacco or the handling of tobacco solely for sale, shipment, or delivery to a manufacturer of tobacco products or processed tobacco.

Section 702 of the Act also included a transitional rule under which manufacturers and importers of processed tobacco who are engaged in such a business on April 1, 2009, and who file an application with TTB before June 30, 2009, may continue in business pending final action from TTB on that application. Finally, section 702 of the Act amended the IRC by extending to manufacturers and importers of processed tobacco provisions related to inventories (section 5721), reports (section 5722), records (section 5741), and packages, marks, labels, and notices (section 5723).

General Approach to This Temporary Rule

Congress mandated regulation of processed tobacco to strengthen the enforcement authority for the Federal excise tax on tobacco products, which significantly increased under the Act (See Joint Committee on Taxation, *Description of the Revenue Provisions of the Children's Health Insurance Program Reauthorization Act of 2009,* (JCX–1–09), January 13, 2009). The Act provides enforcement mechanisms to assist in preventing the diversion of tobacco materials to illegal manufacturers. In promulgating these regulations, TTB has carefully considered how to effectively prevent diversion without creating undue administrative burdens by building on TTB regulations already applicable to manufacturers and importers of tobacco products and to proprietors of export warehouses (as that term is defined in 26 U.S.C. 5702(h)). The discussion below focuses on the manufacturer and importer provisions of parts 40 and 41 of the TTB regulations. A discussion of other changes to parts 44 and 45 is included later in the ''Part by Part Discussion of Regulatory Amendments'' section of this preamble.

Definition of Processed Tobacco

This temporary rule amends §§ 40.11 and 41.11 by adding a definition of ''processed tobacco.'' In addition to specifying what the processing of tobacco does not include, the new definition in each case specifies those activities that we consider to be ''processing'' activities. In this regard, we consider the processing of tobacco to include stemming (the removal of the stem from the tobacco leaf), fermenting, threshing, cutting, and flavoring the tobacco, as well as combining the stemmed tobacco with other non-tobacco ingredients. We do not believe that curing and baling are processing activities within the intent of the Act.

In addition, in §§ 40.11 and 41.11 we have revised the definition of ''package'' and added a new definition of ''packaging'' in order to make clear that ''processing'' does not include consumer packaging of processed tobacco. The term ''package'' is revised to mean the immediate container in which tobacco products, processed tobacco, or cigarette papers or tubes are put up by the manufacturer and offered for sale or delivery to the ultimate consumer. The definition further provides that a container of processed tobacco, the contents of which weigh 10 pounds or less (including any added non-tobacco ingredients or constituents) will be deemed to be in a package offered for sale or delivery to the ultimate consumer. This change is intended to reduce the potential for diversion of processed tobacco from permitted manufacturers. Thus, under these definitions, the placing of processed tobacco in a consumer package may not occur on the premises of a person who is qualified only as a manufacturer of processed tobacco, because such packaging creates a tobacco product, a taxable commodity that may be produced only on the bonded premises of a tobacco product manufacturer.

Permits and Authorizations

Under the regulations adopted in this temporary rule, any person who engages in the business of manufacturing or importing processed tobacco must obtain TTB approval as follows:

- A person who processes tobacco and who does not also manufacture tobacco products must obtain a permit as a manufacturer of processed tobacco.
- A person who holds a TTB permit as a manufacturer of tobacco products, who processes tobacco solely for use in the manufacture of tobacco products under that permit, and who does not remove the processed tobacco from the

premises except for destruction, is not required to obtain authorization from TTB to engage in the manufacture of processed tobacco.

- A person who holds a TTB permit as a manufacturer of tobacco products is required to obtain TTB authorization to remove processed tobacco for purposes other than destruction. Such activity is considered an ''other business'' and is governed by the provisions of 27 CFR 40.47.
- A person who imports processed tobacco, and who does not also import tobacco products under a TTB permit, must obtain a permit to import processed tobacco.
- A person who imports processed tobacco, and who also imports tobacco products under a TTB permit as an importer of tobacco products, is required to amend the existing importer permit to authorize the importer to engage in the importation of processed tobacco under that permit.
- A person who is qualified as a manufacturer of cigarette papers and tubes in accordance with 27 CFR 40.391, and who also processes tobacco, must obtain a TTB permit as a manufacturer of processed tobacco.
- A person who produces processed tobacco solely for his or her own personal use and consumption is not considered to be a manufacturer of processed tobacco for purposes of the new requirements.

A transitional rule applies both to applicants for permits as manufacturers or importers of processed tobacco and to persons who are only required to obtain authorization under an existing permit. Persons to whom the transitional rule applies (that is, persons who are engaged in business on April 1, 2009, and who apply for a permit or authorization before June 30, 2009), will receive a written acknowledgment from TTB upon receipt of the application. The acknowledgment will provide an identifying number that can be used by the applicant, similar to a permit number, for purposes of showing that the holder is authorized to engage in such business pending action on the application. Anyone required to obtain a permit or authorization, and to whom the transitional rule does not apply, must obtain a permit before commencing operations.

The Act did not impose an excise tax on the manufacture or importation of processed tobacco and therefore did not provide for the making of a bond to cover such activities. Accordingly, the regulations contained in this temporary rule do not require a bond of manufacturers or importers of processed tobacco or additional bond coverage of existing tobacco product manufacturers who process tobacco.

Issuance and Duration of a Permit

Under the regulations adopted in this temporary rule, a permit to manufacture processed tobacco will be issued without an expiration date; retention of the permit is conditioned upon continued compliance with the provisions of chapter 52 of the IRC and the regulations promulgated thereunder including the minimum manufacturing and activity requirement as discussed later in this preamble. A permit to import processed tobacco will be valid for a period of three years from the date shown on the permit, with the possibility of renewal of the permit if the importer applies to TTB for renewal within 30 days of the permit's expiration date. These new permit provisions for manufacturers and importers of processed tobacco mirror the existing provisions for manufacturers and importers of tobacco products. The three-year permit period for importers of tobacco products was included in the regulations when Congress, in the Balanced Budget Act of 1997, extended permit requirements to importers. The three-year duration was determined by the Bureau of Alcohol, Tobacco and Firearms (ATF), TTB's predecessor agency, to be a reasonable method to avoid the proliferation of numerous unused permits, which would pose administrative difficulties and thus potential jeopardy to the revenue through unnecessarily diverted agency resources. (See preamble for T.D. ATF–422, 64 FR 71947, published in the **Federal Register** on December 22, 1999.) TTB believes that this rationale still applies and therefore should apply equally to permits for importers of processed tobacco.

As noted above, an importer of tobacco products may apply to amend the existing permit to obtain authorization to import processed tobacco under that permit. Such authorization expires when the permit expires. TTB continues to believe that a limited-duration permit is not necessary for manufacturers of tobacco products or processed tobacco. We note in this regard that the business of a manufacturer requires significant capital commitments for premises and equipment (and, in the case of the manufacturer of tobacco products, bond coverage) in order to obtain a permit. Therefore, because a manufacturer of tobacco products or processed tobacco is much less likely to choose to obtain (or be able to obtain) a permit without making such commitments, it is also less likely that a manufacturer would seek to qualify for a permit that would subsequently go unused.

Minimum Manufacturing and Activity Requirements

Section 5712 of the IRC, which applies to manufacturers and importers of processed tobacco as a result of the changes made by the Act, provides, among other things, that an application for such a permit may be denied if the activity proposed to be carried out does not meet such minimum capacity or activity requirements as the Secretary of the Treasury may by regulation prescribe. Congress enacted this provision to ensure that those who apply for a permit and operate under that permit are actually engaged in the bona fide business of manufacturing or importing and in a way that will adequately protect the revenue and comply with applicable law and regulations.

As noted above, a permit as an importer of processed tobacco will be issued for a three-year period. However, notwithstanding the reasons for the three-year duration of a permit as explained above, TTB believes that there could be a significant number of speculative processed tobacco importer permits applications that lead to the issuance of permits under which no activity takes place. TTB does not believe that it is appropriate to devote agency resources to permit renewals in such cases. Accordingly, the regulations in this temporary rule provide that an application for the renewal of a permit as an importer of processed tobacco may be rejected and the permit denied if no activity has taken place or been reported under such permit for a period of one year immediately prior to the application for renewal.

The regulations in this temporary rule also provide that a permit as a manufacturer of processed tobacco may be suspended or revoked for non-use if no activity has taken place or been reported under such permit for a period of one year. This provision clarifies the TTB position that any minimum activity requirement promulgated pursuant to section 5712 is a continuing condition of a manufacturer's permit.

Records, Reports, and Inventories

As noted above, the Act extends inventory, reporting, and recordkeeping requirements to manufacturers and importers of processed tobacco. Accordingly, the regulations in this temporary rule generally require manufacturers and importers of processed tobacco to take inventory, report, and keep records in a manner similar to that required for

manufacturers and importers of tobacco products, and in a manner that is consistent with good business practice. The new regulations in this temporary rule also recognize that there may be circumstances involved in a manufacturer's or importer's business that require enhanced recordkeeping and reporting. Such circumstances include, for example, the transfer of processed tobacco to a person who does not hold a TTB permit as a tobacco product manufacturer and therefore is not subject to the statutory and regulatory provisions administered by TTB.

As noted above, the Act extended the provisions of the IRC to processed tobacco in order to strengthen enforcement authority over tobacco products and thus prevent the diversion of materials used for making tobacco products to unauthorized manufacturers who would not be accountable to TTB. However, the IRC as amended by the Act places no limitations on the persons to whom manufacturers or importers of processed tobacco may transfer or sell processed tobacco. TTB believes that unregulated transfers or sales of processed tobacco to persons who do not hold TTB permits could lead to processed tobacco falling into the hands of persons who would be unknown and unaccountable to TTB, including illegal manufacturers. In order to better regulate processed tobacco and to minimize its transfer to unauthorized manufacturers, the new regulations in this temporary rule require more detailed records of those who transfer or sell processed tobacco to persons who do not have TTB permits as a manufacturer or importer of tobacco products or of processed tobacco, or as an export warehouse proprietor. The new regulations also include a requirement to file a report with TTB covering all such transfers or sales. These reports must include detailed information regarding the persons and circumstances involved in the transfer or sale of processed tobacco, and the reports must be filed by the close of the business day following such action.

Roll-Your-Own Tobacco

Expansion of the Definition

Prior to the changes made by the Act, the IRC at 26 U.S.C. 5702(o) defined the term ''roll-your-own tobacco'' to mean ''any tobacco which, because of its appearance, type, packaging, or labeling, is suitable for use and likely to be offered to, or purchased by, consumers as tobacco for making cigarettes.'' Section 702(d) of the Act amended the definition by adding at the end ''or cigars, or for use as wrappers thereof.'' The principal effect of this change is to extend the Federal excise tax, permit, and related statutory provisions applicable to manufacturers and importers of roll-your-own tobacco to manufacturers and importers of tobacco for making cigars and for use as wrappers of cigarettes or cigars. The amendment made by section 702(d) applies to articles removed (that is, removed from the factory or from internal revenue bond under IRC section 5704 under regulations prescribed by the Secretary, or released from customs custody) after March 31, 2009. There is no transitional rule with regard to the permit requirement for persons affected by this statutory change; any person engaged in the business of manufacturing or importing any product that falls within the new statutory definition of roll-your-own tobacco is required, as of April 1, 2009, to have a TTB permit.

Further, as a result of the Act, the products that were incorporated into the definition of roll-your-own (products commonly referred to as ''cigar tobacco'', ''cigarette wrapper'' or ''cigar wrapper'') must now comply with the package, mark, label, and notice requirements set forth in parts 40, 41, and 44. Under 27 CFR 40.216b and 41.72b, packages of roll-your-own tobacco must bear a notice that includes the designation of the product for tax purposes. Prior to the amendments of this temporary rule, the permissible designations were ''roll-your-own tobacco,'' ''cigarette tobacco,'' and ''Tax Class J.'' We are amending this notice requirement to add as permissible designations on packages of roll-your-own tobacco the following: ''Cigar tobacco,'' ''cigarette wrapper,'' and ''cigar wrapper,'' and are removing the words ''Tax Class J'' as a permissible designation as discussed later in this preamble. In addition, to allow sufficient time for affected manufacturers and importers to comply with the packaging requirements, we are amending 27 CFR 40.216c and 41.72c to provide that packages of roll-your-own tobacco to which one of the new designations applies (that is, cigar tobacco, cigarette wrapper, or cigar wrapper) may be removed, until August 1, 2009, without being in compliance with the notice requirements of §§ 40.216b and 41.72b. With this amendment, we are also removing from §§ 40.216c and 41.72c existing text, now obsolete, which provided a use-up period for roll-your-own tobacco packages removed in the year 2000.

Distinguishing Between Roll-Your-Own Tobacco and Pipe Tobacco

The tax rate increases adopted in section 701 of the Act resulted in a significant difference between the rate of tax imposed on roll-your-own tobacco ($24.78 per pound) and the rate of tax imposed on pipe tobacco ($2.8311 per pound); prior to the amendments made by the Act, the two rates were the same. While the definition of roll-your-own tobacco was amended by the Act as noted above, no change was made to the definition of pipe tobacco, which reads, ''any tobacco which, because of its appearance, type, packaging, or labeling, is suitable for use and likely to be offered to, or purchased by, consumers as tobacco to be smoked in a pipe.''

Currently, the TTB regulations contain no standards to differentiate between roll-your-own tobacco and pipe tobacco beyond a repeat of the statutory definitions; when the tax rates on the two products were the same, TTB and its predecessor agencies considered it to be sufficient to require manufacturers and importers to meet certain notice requirements, as discussed below.

However, because of the revenue implications resulting from the tax rate changes made by the Act, including the creation of a new incentive for industry members to present a product as, and thus pay the tax at the lower rate for, pipe tobacco, TTB recognizes that there is now a heightened need for more regulatory detail to clarify the difference between the two products. We are currently evaluating analytical methods and other standards to differentiate between roll-your-own tobacco and pipe tobacco, and we may publish rulemaking proposals on this subject for public comment in the near future.

We note that the definitions of pipe tobacco and roll-your-own tobacco both require consideration of the packaging and labeling of the product in order to determine its classification for tax purposes. In this temporary rule we are amending the classification and notice provisions of the tobacco product manufacturer and importer regulations in parts 40 and 41 to more clearly differentiate, on the basis of packaging and labeling, between these two types of taxable products. The nature of, and reasons for, these changes are discussed below.

Sections 40.25a and 41.30, which set forth the tax rates for pipe tobacco and roll-your-own tobacco, are amended by designating the existing text as paragraph (a) with the heading ''tax rates'' and adding a new paragraph (b), with the heading ''classification,'' that: (1) Provides that pipe tobacco and roll-

your-own tobacco must be put up in packages that conform to the applicable package and package notice requirements; (2) provides that any tobacco that has been processed and that is removed in a package that does not bear a notice prescribed under parts 40 or 41 will be deemed to be roll-your-own tobacco; and (3) provides that, even though tobacco that has been processed is removed in a package that bears the notice required for pipe tobacco, it will be deemed to be roll-your-own tobacco if either the package does not bear the words ''pipe tobacco'' wherever the brand name appears or the package or accompanying materials bear any representation suggesting a use other than as pipe tobacco.

In addition, the notice requirements for pipe tobacco in §§ 40.216a and 41.72a are amended by removing from paragraph (a) the last sentence and thereby providing that only the words ''pipe tobacco'' will be permissible as a designation on a package of pipe tobacco and that the designation ''Tax Class L'' may no longer be used as an alternative designation. Similarly, in the notice requirements for roll-your-own tobacco in §§ 40.216b and 41.72b, paragraph (a) is amended by removing the reference to ''Tax Class J'' and also by adding ''cigar tobacco,'' ''cigarette wrapper,'' and ''cigar wrapper'' as permissible designations (as discussed above). Thus, in the case of roll-your-own tobacco, the only permissible package designations will be ''roll-your-own tobacco,'' ''cigarette tobacco,'' ''cigar tobacco,'' ''cigarette wrapper,'' or ''cigar wrapper.'' Finally, §§ 40.216c and 41.72c are revised to set forth a new use-up period, until August 1, 2009, for packages that contain the ''Tax Class L'' or ''Tax Class J'' designations, which are no longer permissible under the notice requirements adopted in this temporary rule.

The changes to §§ 40.25a and 41.30 described above are intended to address two distinct but related tax rate issues. The first issue relates to the significant difference between the rates applicable to pipe tobacco and to roll-your-own tobacco and the resulting incentive for a taxpayer to classify a product as pipe tobacco rather than as roll-your-own tobacco. The amendments are tied to the revised notice requirements for pipe tobacco and roll-your-own tobacco because the way those notices appear on the package goes directly to the inquiry required under each statutory definition, that is, whether, because of the packaging or labeling of the product, the product is ''likely to be offered to, or purchased by, consumers as'' tobacco to be smoked in a pipe or tobacco for making cigarettes or cigars. The circumstances in which a product is deemed to be roll-your-own tobacco rather than pipe tobacco in the amended texts are intended to ensure that the tax collected on the product is consistent with the way the product is presented to the consumer.

The second issue regarding the changes to §§ 40.25a and 41.30 relates to the fact that ''processed tobacco'' is not subject to tax. TTB believes that it is essential to recognize that there will be a point at which tobacco will have been processed in such a way that it is no longer the untaxed commodity but rather has become a taxable ''tobacco product.'' For example, activities such as cutting and flavoring are processes that would result in a ''tobacco product'' (such as roll-your-own tobacco) but for the fact that it is not in a consumer package. Thus, under the regulatory texts in this temporary rule, processed tobacco that is removed from a factory or imported in a package with a content of 10 pounds or less will be deemed to be roll-your-own tobacco for permit and tax purposes unless the package fully complies with the notice requirements for pipe tobacco or for the other non-cigarette and non-cigar tobacco products (that is, smokeless tobacco, also referred to as snuff and chewing tobacco).

The removals of the ''Tax Class L'' and ''Tax Class J'' designations were done in order to ensure that the packaging and labeling of the two products convey the type of tobacco contained inside; as noted above, the notice requirements speak directly to the consideration of the effect the packaging or labeling of a product has on how a product is likely to be offered to or purchased by consumers. Because specific references to the contents are now required, continued use of the tax class designations would be inappropriate. The addition of references to ''pipe tobacco,'' ''cigarette wrapper,'' and ''cigar wrapper'' is simply intended to conform the texts to the addition of the words ''or cigars, or for use as wrappers thereof'' at the end of the statutory definition of roll-your-own tobacco.

Effect on Manufacturers and Importers of Tobacco Products

Minimum Manufacturing and Activity Requirement

As noted above, the regulations adopted in this temporary rule provide that the permit of a manufacturer of processed tobacco may be suspended or revoked, and a processed tobacco importer's application for permit renewal may be rejected, if there has been no activity or if no activity has been reported under that permit for one year prior to the application for renewal. TTB believes that the rationale for such provisions applies equally to importers and manufacturers of tobacco products because, as noted above, the intention of the limited-duration permit was to ensure that only those engaged in bona fide business were issued, and continue to hold, a TTB permit. TTB has found that unused permits are not uncommon and that they cause unnecessary administrative burden and divert resources from enforcement activities related to persons actually engaged in the businesses that TTB regulates. Accordingly, we are also amending the regulations applicable to manufacturers and importers of tobacco products in §§ 40.61 and 41.202, respectively, to state that such permits may be subject to suspension or revocation, or in the case of importers may not be renewed for non-use. We are also adding in part 40, for clarification and cross-reference purposes, a new § 40.256 to provide that the minimum activity requirement set forth in § 40.61 is a continuing condition for retention of a manufacturer's permit.

Recording of Processed Tobacco

Section 40.182 has required manufacturers of tobacco products to account for all tobacco, other than tobacco products, that is received, shipped, lost, and destroyed. This temporary rule amends § 40.182 to require manufacturers to account on a daily basis for processed tobacco and amends § 40.201 to require that inventories include both tobacco products and processed tobacco. The recording of other tobacco is not required. Specifically, the revised § 40.182 text provides that a manufacturer of tobacco products who processes tobacco on the factory premises solely for use in the manufacture of tobacco products under that permit, and who does not remove processed tobacco from the factory premises for any purpose other than destruction, must maintain daily records that show the total quantity in pounds of all processed tobacco on hand, received, used in the manufacture of tobacco products, lost, and destroyed. A manufacturer of tobacco products who removes processed tobacco from the factory for any purpose other than for destruction must keep the same records and submit the same reports as those required for manufacturers of processed tobacco.

Part by Part Discussion of Regulatory Amendments

This temporary rule adds new subpart L to part 40 and new subpart M in part 41 to set forth the qualification and other requirements applicable to manufacturers and importers of processed tobacco discussed above. This temporary rule also makes a number of conforming changes to parts 40, 41, 44, and 45, including amendments to the definitions of ''export warehouse proprietor'', ''package'', ''removal and remove'', and ''roll-your-own tobacco'', and the addition of definitions of ''processed tobacco'' and ''manufacturer of processed tobacco'', and the addition of references to ''processed tobacco'', where appropriate. The following additional points are noted regarding the regulatory amendments contained in this document:

Part 40

In § 40.11, we are replacing the definition of ''permit number'' with a more general definition that would be equally applicable to permits issued to manufacturers and importers of processed tobacco and to permits issued to manufacturers and importers of tobacco products. This change does not affect existing permit holders.

Section 40.61 describes general qualification requirements for manufacturers of tobacco products. In addition to including the amendment regarding minimum activity discussed above, we are revising the text for the following reasons:

First, we believe that it is appropriate to specify that a proprietor of a customs bonded warehouse is not required to qualify for a permit as a manufacturer with respect to the operations of such warehouse. This exemption appears in the IRC at 26 U.S.C. 5702(d) and the amendment merely reflects the statutory language.

Second, we are adding a provision to clarify that a retailer such as a tobacconist may, without triggering a TTB permit requirement, take a taxpaid tobacco product out of the package and place it into a different container for sale directly to a consumer; this amendment reflects the language that appears in 26 U.S.C. 5751(a)(3).

Finally, we have placed the existing minimum manufacturing and activity provisions in new paragraph (c) and added a new provision stating that the activity of packaging processed tobacco alone may be sufficient to qualify a person as a manufacturer of tobacco products. We believe this position is necessary to implement the amendments made by the Act, under which processing of tobacco may result in a product that, except for the fact that it is not in a package, would qualify as a taxable tobacco product. It is the position of TTB that the placing of processed tobacco in a container that meets the definition of a ''package'' under amended §§ 40.11 and 41.11 indicates a clear intent to create a taxable commodity because, in fact, a taxable commodity is what results from such a packaging operation. Accordingly, such packaging may only occur on the premises of a bonded manufacturer of tobacco products. Thus, because packaging of processed tobacco results in a consumer-ready, taxable, tobacco product, we believe that the activity of packaging processed tobacco alone may be sufficient to qualify a person as a manufacturer of a taxable tobacco product. Without this provision, TTB would have an inadequate regulatory basis for controlling the diversion of processed tobacco that needs only to be packaged in order to be consumer-ready. However, the same rationale does not apply to the packaging of cigarettes and cigars, because the statutory definitions of the two products are met for tax purposes prior to the placing of the products in packages.

In § 40.47, concerning other businesses within a factory, we have amended references to ''factory'' and to ''manufacturer'' to specify that the former refers to the factory of a manufacturer of tobacco products and the latter to a manufacturer of tobacco products. These amendments clarify that the provisions of § 40.47 apply to the factory of a manufacturer of tobacco products and not to the factory of a manufacturer who only processes tobacco. We have also removed the requirement that the application for authorization to engage in an ''other business'' be submitted in triplicate, as multiple copies of the submission are no longer necessary. Finally, we have included text that applies the transitional rule to manufacturers of tobacco products who also process tobacco and remove it for purposes other than destruction. Such a manufacturer who is engaged in the business of processing tobacco on April 1, 2009, and who submits an application for authorization under § 40.47 before June 30, 2009, may continue to engage in such business pending TTB action on the application.

In § 40.61, we have also removed the statement that repackaging and relabeling alone do not qualify as a manufacturing activity. We believe this statement is unnecessary and could be misleading. Repackaging (that is, the removal of a tobacco product from the package in which it was removed from the factory or released from customs custody upon determination of tax, and the placement of that tobacco product into another package to be offered for sale to a consumer) may only occur under TTB authorization in accordance with § 40.217.

We are amending § 40.72, concerning the use of factory premises to specifically address the use by a manufacturer of tobacco products of the factory premises for processing of tobacco. The amendment clarifies that a manufacturer of tobacco products who processes tobacco solely for use in the manufacture of tobacco products under an existing permit, who does not remove the processed tobacco for any purpose other than destruction, and who maintains records with respect to the disposition of the processed tobacco are not required to apply for TTB authorization under § 40.47. If any of these conditions are not met, that manufacturer must apply for authorization under § 40.47.

In § 40.202, we are replacing the obsolete text of paragraph (b), which concerns the report of wholesale prices of large cigars removed before January 1, 1991, with new text setting forth a requirement to keep records and submit reports when processed tobacco is removed from the factory premises other than for destruction.

In § 40.211, we are adding a statement to reflect the language that appears in 26 U.S.C. 5751(a)(2) and (3), to the effect that no person may purchase, receive, possess (except for personal consumption), offer for sale, or sell or otherwise dispose of, after removal, any tobacco products that are not put up in packages or that are put up in packages not bearing the marks, labels, and notices, as required under 27 CFR part 40. That statutory prohibition is not reflected elsewhere in the TTB regulations and, due to the new significance placed on the packaging of products in the amendments made by this temporary rule, we believe an explicit statement in the regulations would be helpful to industry members.

We are also adding a new § 40.257 to alert manufacturers of tobacco products to the provisions related to processed tobacco. The new section acts merely as a readers guide.

Part 41

Section 41.71, concerning tobacco product packages, is amended in the same manner and for the same reason as the amendment to § 40.211 described above. That is, a statement is added to reflect the language that appears in 26

U.S.C. 5751(a)(2) and (3), to the effect that no person may purchase, receive, possess (except for personal consumption), offer for sale, or sell or otherwise dispose of, after removal, any tobacco products that are not put up in packages or that are put up in packages not bearing the marks, labels, and notices, as required under 27 CFR part 41.

We have removed § 41.192, which provided a transitional rule for the implementation of the permit requirement for importers of tobacco products prescribed in T.D. ATF–422 (64 FR 71951, published in the **Federal Register** on December 22, 1999) because it is no longer needed. For the same reason, in § 41.201, we are removing the reference to temporary permits issued under former § 41.192.

We have removed § 41.205 because that regulation was promulgated pursuant to the Contraband Cigarette Trafficking Act (18 U.S.C. 2342). The authority to promulgate regulations under the Contraband Cigarette Trafficking Act now rests with the Bureau of Alcohol, Tobacco, Firearms, and Explosives at the Department of Justice, not with TTB.

We have revised §§ 41.206, 41.207, and 41.208, concerning reports and records, for organizational and editorial reasons and to remove obsolete text. In § 41.206, we have removed the requirement that the first reports submitted by an importer cover all months beginning January 1, 2000, as this requirement arose from a prior transitional rule. We have also removed § 41.207 and included its provisions, with some editorial changes, in § 41.208 in order to have a single section covering the retention and maintenance of records.

Part 44

We have removed § 44.90, concerning restrictions relating to operations at an export warehouse premises, and have included its terms, with modifications, in new § 44.141a. The new section, under the heading ''Use of premises'', reflects the new definition of ''export warehouse'' by providing that an export warehouse premises may only be used for the storage of non-taxpaid tobacco products and cigarette papers and tubes, and for the storage of processed tobacco, pending export.

Part 45

We have conformed §§ 45.45a, 45.45b, and 45.45c to the revised notice and use-up provisions for pipe tobacco and roll-your-own tobacco as discussed above for parts 40 and 41.

Temporary Rule

Based on the April 1, 2009, effective date of the new permit provisions applicable to manufacturers and importers of processed tobacco and the expanded definition of roll-your-own tobacco, also effective April 1, 2009, TTB believes that proper administration and enforcement of those requirements necessitates the immediate adoption of implementing regulations as a temporary rule. TTB believes that such implementing action ensures that affected industry members will have timely knowledge of the regulatory requirements.

Public Participation

For submitting comments, please refer to the notice of proposed rulemaking on this subject published in the ''Proposed Rules'' section of this issue of the **Federal Register**.

Regulatory Flexibility Act

We certify that this temporary rule will not have a significant economic impact on a substantial number of small entities. Accordingly, a regulatory flexibility analysis is not required. The regulatory obligations and relevant collections of information derive directly from the Internal Revenue Code of 1986, as amended, and the regulations in this rule concerning these obligations and collections merely implement and provide necessary standards for complying with the statutory requirements. Likewise, any secondary or incidental effects, and any reporting, recordkeeping, or other compliance burdens flow directly from the statute. Pursuant to 26 U.S.C. 7805(f), this temporary regulation will be submitted to the Chief Counsel for Advocacy of the Small Business Administration for comment on its impact on small businesses.

Paperwork Reduction Act

TTB has provided estimates of the burden that the collection of information contained in these regulations imposes, and the estimated burden has been reviewed and approved by the Office of Management and Budget (OMB) in accordance with the Paperwork Reduction Act of 1995 (44 U.S.C. 3507) and assigned control numbers 1513–0024, 1513–0032, 1513–0033, 1513–0035, 1513–0068, 1513–0070, 1513–0078, 1513–0106, 1513–0107, and 1513–0130.

Under the Paperwork Reduction Act of 1995, an agency may not conduct or sponsor, and a person is not required to respond to, a collection of information unless it displays a valid OMB control number.

Comments concerning suggestions for reducing the burden of the collections of information in this document should be directed to Mary A. Wood, Alcohol and Tobacco Tax and Trade Bureau, at any of these addresses:

- P.O. Box 14412, Washington, DC 20044–4412;
- 202–927–8525 (facsimile); or
- *formcomments@ttb.gov* (e-mail).

Executive Order 12866

This is not a significant regulatory action as defined in E.O. 12866. Therefore, it requires no regulatory assessment.

Inapplicability of Prior Notice and Comment and Delayed Effective Date Procedures

Because this document implements provisions of a law that are effective on April 1, 2009, and because immediate guidance is necessary to implement these provisions, it is found to be impracticable to issue this Treasury decision with notice and public procedure under 5 U.S.C. 553(b).

Pursuant to the provisions of 5 U.S.C. 553(d)(2), and (d)(3), we are issuing these regulations without a delayed effective date. TTB has determined that this regulation is an interpretative rule that implements Public Law 111–3 as provided for in section 553(d)(2). TTB also has determined that good cause exists to provide industry members with immediate guidance on procedures to apply for and obtain a permit for operations as importers and manufacturers of processed tobacco and to clarify the difference between certain taxable commodities that are subject to different tax rates, in accordance with section 553(d)(3).

Drafting Information

Amy R. Greenberg of the Regulations and Rulings Division, Alcohol and Tobacco Tax and Trade Bureau, drafted this document. Other employees of the Alcohol and Tobacco Tax and Trade Bureau also participated in its development.

List of Subjects

27 CFR Part 40

Cigars and cigarettes, Claims, Electronic funds transfers, Excise taxes, Imports, Labeling, Packaging and containers, Reporting and recordkeeping requirements, Surety bonds, Tobacco.

27 CFR Part 41

Cigars and cigarettes, Claims, Customs duties and inspection, Electronic funds transfers, Excise taxes, Imports, Labeling, Packaging and containers, Puerto Rico, Reporting and

recordkeeping requirements, Surety bonds, Tobacco, Virgin Islands, Warehouses.

27 CFR Part 44

Aircraft, Armed forces, Cigars and cigarettes, Claims, Customs duties and inspection, Excise taxes, Exports, Foreign trade zones, Labeling, Packaging and containers, Reporting and recordkeeping requirements, Surety bonds, Tobacco, Vessels, Warehouses.

27 CFR Part 45

Administrative practice and procedure, Authority delegations (Government agencies), Cigars and cigarettes, Excise taxes, Labeling, Packaging and containers, Reporting and recordkeeping requirements, Tobacco.

Amendments to the Regulations

■ For the reasons set forth in the preamble, title 27, chapter I, of the Code of Federal Regulations is amended as follows:

PART 40—MANUFACTURE OF TOBACCO PRODUCTS, CIGARETTE PAPERS AND TUBES, AND PROCESSED TOBACCO

■ 1. The authority citation for part 40 is revised to read as follows:

Authority: 26 U.S.C. 5142, 5143, 5146, 5701–5705, 5711–5713, 5721–5723, 5731, 5741, 5751, 5753, 5761–5763, 6061, 6065, 6109, 6151, 6301, 6302, 6311, 6313, 6402, 6404, 6423, 6676, 6806, 7011, 7212, 7325, 7342, 7502, 7503, 7606, 7805; 31 U.S.C. 9301, 9303, 9304, 9306.

■ 2. The heading to part 40 is revised to read as set forth above.

■ 3. Section 40.1 is revised to read as follows:

§ 40.1 Manufacture of tobacco products, cigarette papers and tubes, and processed tobacco.

This part contains regulations relating to the manufacture of tobacco products, cigarette papers and tubes, and processed tobacco; the payment by manufacturers of tobacco products and cigarette papers and tubes of internal revenue taxes imposed by 26 U.S.C. chapter 52; and the qualification of and operations by manufacturers of tobacco products, cigarette papers and tubes, and processed tobacco.

■ 4. In § 40.11:

■ a. The definition of ''Export warehouse'' is amended by removing the words ''tobacco products and cigarette papers and tubes'' and adding, in their place, the words ''tobacco products or cigarette papers or tubes or any processed tobacco'';

■ b. The definition of ''Factory'' is amended by adding after the words ''tobacco products'' the words ''or processed tobacco,'';

■ c. New definitions of ''Manufacturer of processed tobacco'', ''Packaging'', and ''Processed tobacco'' are added in appropriate alphabetical order;

■ d. The definitions of ''Package'' and ''Permit number'' are revised;

■ e. The definition of ''Removal or remove'' is amended by adding after the words ''tobacco products or cigarette papers or tubes'' the words '', or any processed tobacco''; and

■ f. The definition of ''Roll-your-own tobacco'' is amended by adding at the end before the period the words ''or cigars, or for use as wrappers of cigars or cigarettes''.

The revisions and additions read as follows:

§ 40.11 Meaning of terms.

* * * * *

Manufacturer of processed tobacco. Any person who processes any tobacco other than tobacco products.

* * * * *

Package. The immediate container in which tobacco products, processed tobacco, or cigarette papers or tubes are put up by the manufacturer and offered for sale or delivery to the ultimate consumer. For purposes of this definition, a container of processed tobacco, the contents of which weigh 10 pounds or less (including any added non-tobacco ingredients or constituents), that is removed within the meaning of this part, is deemed to be a package offered for sale or delivery to the ultimate consumer.

Packaging. The act of placing processed tobacco or a tobacco product in a package.

Permit number. The identifying number and/or letters that are assigned to a TTB permit by the appropriate TTB officer.

* * * * *

Processed tobacco. Processed tobacco is any tobacco that has undergone processing, but does not include tobacco products. For purposes of this definition, the processing of tobacco does not include the farming or growing of tobacco or the handling of tobacco solely for sale, shipment, or delivery to a manufacturer of tobacco products or processed tobacco, nor does the processing of tobacco include curing, baling, or packaging activities. For purposes of this definition, the processing of tobacco includes, but is not limited to, stemming (that is, removing the stem from the tobacco leaf), fermenting, threshing, cutting, or flavoring the tobacco, or otherwise combining the tobacco with non-tobacco ingredients.

* * * * *

■ 5. Section 40.25a is amended by revising the section heading, designating the existing text as paragraph (a), adding a heading to newly designated paragraph (a), and adding a new paragraph (b). The revision and additions read as follows:

§ 40.25a Pipe tobacco and roll-your-own tobacco tax rates and classification.

(a) *Tax rates.* * * *

(b) *Classification.* (1) Pipe tobacco and roll-your-own tobacco, before removal subject to tax, must be put up in packages that conform to the requirements of §§ 40.211 and 40.212, and of § 40.216a or § 40.216b as appropriate.

(2) Any tobacco that has been processed and that is removed in a package, as that term is defined in § 40.11, that does not bear the notice for smokeless tobacco prescribed in § 40.216 or the notice for pipe tobacco prescribed in § 40.216a is deemed to be roll-your-own tobacco and subject to tax at the rate applicable to roll-your-own tobacco.

(3) Any tobacco that has been processed and that is removed in a package, as that term is defined in § 40.11, is deemed to be roll-your-own tobacco and subject to tax at the rate applicable to roll-your-own tobacco, even though the package bears the notice required for pipe tobacco under § 40.216a, if:

(i) The package does not bear the declaration ''pipe tobacco'' in direct conjunction with, parallel to, and in substantially the same conspicuousness of type and background as the brand name each time the brand name appears on the package; or

(ii) The package or accompanying materials bear any representation that would suggest a use other than as pipe tobacco. (26 U.S.C. 5702 and 5723)

■ 6. Section 40.47 is revised to read as follows:

§ 40.47 Other businesses within factory.

(a) *General.* The appropriate TTB officer may authorize such other businesses within the factory of a manufacturer of tobacco products as he finds will not jeopardize the revenue, will not hinder the effective administration of this part, and will not be contrary to law. A manufacturer of tobacco products who wishes to engage in another business within the factory must submit a written application to do so to the appropriate TTB officer. Except as otherwise provided in paragraph (b)

of this section, a manufacturer of tobacco products may not engage in such other business until the application is approved by the appropriate TTB officer. The manufacturer must retain as part of its records any authorization provided under this section.

(b) *Processed tobacco.* A manufacturer of tobacco products who removes processed tobacco for purposes other than destruction must apply for and obtain TTB authorization to engage in another business within the factory, in accordance with paragraph (a) of this section. Such manufacturer who is engaged in the processing of tobacco on April 1, 2009, and who applies for authorization before June 30, 2009, may continue to engage in such activity pending TTB action on the application.

Subpart E—[Heading Amended]

■ 7. The heading for subpart E is amended by adding at the end the words ''of Tobacco Products''.

■ 8. Section § 40.61 is revised to read as follows:

§ 40.61 Qualification.

(a) *General.* Except as otherwise provided in paragraph (b) of this section, every person who manufactures tobacco products must qualify for, and obtain, a permit as a manufacturer of tobacco products in accordance with the provisions of this part.

(b) *Exceptions.* The following persons are not considered to be engaged in the business of manufacturing tobacco products for purposes of this part:

(1) A person who produces tobacco products solely for that person's own consumption or use;

(2) A proprietor of a customs bonded manufacturing warehouse with respect to the operation of such warehouse;

(3) A retailer of tobacco products, such as a tobacconist, who takes taxpaid tobacco products out of the package, as that term is defined in § 40.11, in front of waiting customers and places the tobacco products into a different container for immediate delivery to those customers; or

(4) A person whose operations are limited to, and who holds a permit as, a manufacturer of processed tobacco.

(c) *Minimum manufacturing and activity requirements.* A permit to manufacture tobacco products will only be granted to those persons whose principal business activity under such permit will be the manufacture of tobacco products. A permit will not be granted to any person whose principal business activity under such permit will be to receive or transfer tobacco products in bond. As a minimum activity requirement, in order to qualify for a permit, the quantity of tobacco products manufactured under the permit must be equivalent to, or exceed, the quantity to be transferred or received in bond under the permit. For the purposes of this section, the activity of packaging processed tobacco may be sufficient to qualify as a manufacturing activity.

■ 9. Section 40.72 is revised to read as follows:

§ 40.72 Use of factory premises.

(a) *General.* Unless otherwise authorized by the appropriate TTB officer as provided in § 40.47, the premises used by a manufacturer of tobacco products for his factory shall be used exclusively for the purposes of manufacturing and storing tobacco products; storing materials, equipment, and supplies related thereto or used or useful in the conduct of the business; and carrying on activities in connection with business of the manufacturer of tobacco products.

(b) *Manufacturers who process tobacco.* (1) A manufacturer of tobacco products who processes tobacco on the factory premises solely for use in the manufacture of tobacco products under that permit, who does not remove processed tobacco from the factory premises for any purpose other than destruction, and who maintains adequate records with respect to the disposition of the processed tobacco in accordance with § 40.182, may engage in such operations under the authority of its existing permit on the factory premises and without application for such authorization from TTB. If any of these conditions is not met, the manufacturer must, in order to engage in the processing of tobacco under the existing permit, obtain authorization from TTB in accordance with § 40.47, and must keep records and submit reports as prescribed in §§ 40.521 and 40.522.

(2) A manufacturer of tobacco products who removes processed tobacco from the factory premises for any purpose other than destruction must obtain authorization of that activity from TTB in accordance with § 40.47 and must keep records and submit reports as prescribed in §§ 40.521 and 40.522.

Subpart F—[Heading Amended]

■ 10. The heading for subpart F is amended by adding at the end the words ''of Tobacco Products''.

Subpart H—[Heading Amended]

■ 11. The heading for subpart H is amended by adding at the end the words ''of Tobacco Products''.

■ 12. Section 40.182 is revised to read as follows:

§ 40.182 Record of processed tobacco.

(a) A manufacturer of tobacco products who processes tobacco on the factory premises solely for use in the manufacture of tobacco products under that permit, and who does not remove processed tobacco from the factory premises for any purpose other than destruction, must maintain a daily record that shows the total quantity in pounds of all processed tobacco:

(1) On hand;

(2) Received, together with the name and address of the person from whom received;

(3) Used in the manufacture of tobacco products;

(4) Lost, together with the circumstances of the loss; and

(5) Destroyed, together with the circumstances of the destruction.

(b) In addition to the recordkeeping and reporting requirements set forth elsewhere in this part, a manufacturer of tobacco products who removes processed tobacco from the factory premises for any purpose other than for destruction must keep records and submit reports as prescribed in §§ 40.521 and 40.522.

(Approved by the Office of Management and Budget under control number 1513–0068)

§ 40.201 [Amended]

■ 13. The first sentence in § 40.201 is amended by adding after the words ''all tobacco products and'' the word ''processed''.

■ 14. In § 40.202, paragraph (b) and the Office of Management and Budget control number reference are revised to read as follows:

§ 40.202 Reports.

* * * * *

(b) *Report of processed tobacco removed.* In addition to the recordkeeping and reporting requirements set forth elsewhere in this part, a manufacturer of tobacco products who removes processed tobacco from the factory premises for any purpose other than destruction must record and report those removals in accordance with § 40.522 of this part.

(Approved by the Office of Management and Budget under Control No. 1513–0033)

* * * * *

■ 15. Section 40.211 is amended by adding a sentence at the end of the

section and by revising the statutory citations. The addition and revision read as follows:

§ 40.211 Package.

* * * No person may purchase, receive, possess (except for personal consumption), offer for sale, or sell or otherwise dispose of, after removal, any tobacco products that are not put up in packages bearing the marks, labels, and notices, as required under this part.

(26 U.S.C. 5723 and 5751)

§ 40.216a [Amended]

■ 16. In § 40.216a, paragraph (a) is amended by removing the last sentence.

■ 17. In § 40.216b, paragraph (a) and the Office of Management and Budget control number reference are revised to read as follows:

§ 40.216b Notice for roll-your-own tobacco.

(a) *Product designation.* Every package of roll-your-own tobacco, before removal subject to tax, must have adequately imprinted on it, or on a label securely affixed to it, the applicable designation ''roll-your-own tobacco'', ''cigarette tobacco'', ''cigar tobacco'', ''cigarette wrapper'', or ''cigar wrapper''.

* * * * *

(Approved by the Office of Management and Budget under control number 1513–0091)

■ 18. Section 40.216c is revised to read as follows:

§ 40.216c Package use-up rule.

(a) A manufacturer of pipe tobacco or roll-your-own tobacco may remove packages of such products bearing the designation ''Tax Class L'' (to designate pipe tobacco) or ''Tax Class J'' (to designate roll-your-own tobacco) only if such packages were in use prior to April 1, 2009, and such manufacturer may continue to remove packages bearing those designations until August 1, 2009.

(b) A manufacturer may, until August 1, 2009, remove roll-your-own tobacco for which the applicable designation is ''cigar tobacco,'' ''cigarette wrapper,'' or ''cigar wrapper'' even if the packages of such products do not meet the requirements of § 40.216(b).

■ 19. The undesignated center heading before § 40.251 is amended by removing the words ''Tobacco Products'' and adding, in their place, the word ''Operations''.

■ 20. A new § 40.256 is added at the end of subpart H to read as follows:

§ 40.256 Minimum manufacturing and activity requirements.

The minimum manufacturing and activity requirement prescribed in § 40.61(b) of this part is a continuing condition of a manufacturer's permit, that is, a permit to manufacture tobacco products is conditioned upon a person's principal business activity being the manufacture of tobacco products. A permit may be suspended, and subsequently revoked, if the person's principal business activity under such permit is to receive or transfer tobacco products in bond, or if the person has no activity under such permit for a period of one year. As a minimum activity requirement, the quantity of tobacco products manufactured under the permit must exceed the quantity transferred or received in bond under the permit.

■ 21. A new § 40.257 is added at the end of subpart H to read as follows:

§ 40.257 Processed tobacco.

A manufacturer of tobacco products may be required to obtain authorization from the appropriate TTB officer with regard to the activities involving processed tobacco. See § 40.72. Such manufacturers also must maintain records and may be required to submit reports regarding such activities. See §§ 40.182 and 40.202.

■ 22. A new subpart L, consisting of §§ 40.491 through 40.534, is added to read as follows:

Subpart L—Manufacture of Processed Tobacco

Sec.

Qualification Requirements for Manufacturers of Processed Tobacco

40.491 Persons required to qualify.
40.492 Application for permit.
40.493 Transitional rule.
40.494 Corporate documents.
40.495 Articles of partnership or association.
40.496 Trade name certificate.
40.497 Additional information.
40.498 Investigation of applicant.
40.499 Notice of contemplated disapproval.
40.500 Issuance of permit.
40.501 Retention of permit and supporting documents.

Changes After Qualification

40.511 Change in name.
40.512 Change in ownership or control.
40.513 Change in location or address of factory.

Operations by Manufacturers of Processed Tobacco

40.521 Record of processed tobacco.
40.522 Reports.
40.523 Inventories.
40.524 Retention of documents.
40.525 Discontinuance of operations.
40.526 Minimum manufacturing and activity requirements.
40.527 Authorization to package processed tobacco.
40.528 Suspension and revocation of permit.

Other Provisions Related to Manufacturers of Processed Tobacco

40.531 Alternate methods or procedures.
40.532 Emergency variations from requirements.
40.533 Penalties and forfeitures.
40.534 Power of attorney.

Subpart L—Manufacture of Processed Tobacco

Qualification Requirements for Manufacturers of Processed Tobacco

§ 40.491 Persons required to qualify.

(a) *General.* Except as otherwise provided in paragraph (b) of this section, every person who engages in the processing of tobacco must first qualify for and receive a permit as a manufacturer of processed tobacco in accordance with the provisions of this subpart.

(b) *Exceptions.* (1) A person who engages in the processing of tobacco solely for his own personal use or consumption and not for sale or transfer to another person is not engaged in the manufacture of processed tobacco for purposes of this part and, accordingly, is not required to qualify as a manufacturer of processed tobacco.

(2) Any person who holds a TTB permit for the manufacture of tobacco products is thereby authorized to process tobacco solely for use in the manufacture of tobacco products under that permit, so long as the processed tobacco is not removed from the factory for any purpose other than destruction. Such a manufacturer is not required to qualify under this subpart as a manufacturer of processed tobacco.

(3) Any person who holds a TTB permit for the manufacture of tobacco products who removes processed tobacco from the factory for any purpose other than destruction must apply for authorization from TTB to engage in that activity, in accordance with § 40.47, under the manufacturer's existing permit.

§ 40.492 Application for permit.

The application for a permit as a manufacturer of processed tobacco must be made on TTB F 5200.3, according to the instructions on the form. All documents required under this subpart to be furnished with the application must be included with the application.

§ 40.493 Transitional rule.

(a) Any person who:

(1) On April 1, 2009, is engaged in business as a manufacturer of processed tobacco; and

(2) Before June 30, 2009, submits an application for a permit or authorization as provided in this part to engage in such business, may continue to engage in that business pending final action on the application.

(b) Pending final action on an application or request for authorization submitted under paragraph (a) of this section, all provisions of chapter 52 of the Internal Revenue Code of 1986 shall apply to the applicant in the same manner and to the same extent as if the applicant were a holder of a permit to manufacture processed tobacco under chapter 52.

(c) Upon receipt of an application, the appropriate TTB officer will provide the applicant with a written acknowledgement that may be used for a limited period as confirmation of TTB authorization to engage in the business of a manufacturer of processed tobacco.

§ 40.494 Corporate documents.

Every corporation that files an application for a permit as a manufacturer of processed tobacco must furnish with its application for the permit required by § 40.492 a true copy of the corporate charter or a certificate of corporate existence or incorporation executed by the appropriate officer of the State in which incorporated. The corporation must likewise furnish duly authenticated extracts of the stockholders' meetings, bylaws, or directors' meetings, listing the offices the incumbents of which are authorized to sign documents or otherwise act in behalf of the corporation in matters relating to 26 U.S.C. chapter 52, and regulations issued thereunder. The corporation must also furnish evidence, in duplicate, of the identity of the officers and directors and each person who holds more than ten percent of the stock of such corporation. Where any of the information required by this section has previously been filed with the appropriate TTB officer and such information is currently complete and accurate, a written statement to that effect, in duplicate, will be sufficient for the purpose of this section.

§ 40.495 Articles of partnership or association.

Every partnership or association that files an application for a permit as a manufacturer of processed tobacco must furnish with its application for the permit required by § 40.492 a true copy of the articles of partnership or association, if any, or certificate of partnership or association where required to be filed by any State, county, or municipality. Where a partnership or association has previously filed such documents with the appropriate TTB officer and such documents are currently complete and accurate, a written statement, in duplicate, to that effect by the partnership or association will be sufficient for the purpose of this section.

§ 40.496 Trade name certificate.

Every person that files an application for a permit as a manufacturer of processed tobacco must furnish with the application for the permit required by § 40.492 a true copy of the certificate or other document, if any, issued by a State, county, or municipal authority in connection with the transaction of business under such trade name. If no such certificate or other document is so required, a written statement, in duplicate, to that effect by such person will be sufficient for the purpose of this section.

§ 40.497 Additional information.

The appropriate TTB officer may require such additional information as deemed necessary to determine whether the applicant is entitled to a permit under this subpart. The applicant shall, when required by the appropriate TTB officer, furnish as a part of the application for the permit such additional information as may be necessary for the appropriate TTB officer to determine whether the applicant is entitled to a permit.

§ 40.498 Investigation of applicant.

Appropriate TTB officers may inquire or investigate to verify the information in connection with an application for a permit. The investigation will ascertain whether the applicant is eligible for a permit. A permit may be denied if the applicant (including, in the case of a corporation, any officer, director, or principal stockholder and, in the case of a partnership, a partner)—

(a) Is, by reason of his business experience, financial standing, or trade connections or by reason of previous or current legal proceedings involving a felony violation of any other provision of Federal criminal law relating to tobacco products, processed tobacco, cigarette paper, or cigarette tubes, not likely to maintain operations in compliance with this chapter;

(b) Has been convicted of a felony violation of any provision of Federal or State criminal law relating to tobacco products, processed tobacco, cigarette paper, or cigarette tubes; or

(c) Has failed to disclose any material information required or made any material false statement in the application therefor.

§ 40.499 Notice of contemplated disapproval.

If the appropriate TTB officer has reason to believe that the applicant is not entitled to a permit, the appropriate TTB officer will promptly give to the applicant notice of the contemplated disapproval of the application and opportunity for hearing thereon in accordance with part 71 of this chapter. If, after such notice and opportunity for hearing, the appropriate TTB officer finds that the applicant is not entitled to a permit, an order will be prepared stating the findings on which the permit request is denied.

§ 40.500 Issuance of permit.

If the application for permit, together with the supporting documents, required under this part is approved, the appropriate TTB officer will issue a permit on TTB F 5200.28 to the applicant as a manufacturer of processed tobacco.

§ 40.501 Retention of permit and supporting documents.

The manufacturer must retain the permit, together with the copy of the application and supporting documents returned with the permit, at the same place where the records required by this subpart are kept. The permit and supporting documents must be made available for inspection by any appropriate TTB officer upon request.

Changes After Qualification

§ 40.511 Change in name.

(a) *Change in individual name.* When there is a change in the name of an individual operating under a permit as a manufacturer of processed tobacco, the manufacturer must, within 30 days of such change, make application on TTB F 5200.16 for an amended permit.

(b) *Change in trade name.* When there is a change in a trade name used by a manufacturer of processed tobacco in connection with operations authorized by the permit, the manufacturer must, within 30 days of such change, make application on TTB F 5200.16 for an amended permit to reflect such change. This requirement also applies to the addition or discontinuance of a trade name. The manufacturer must also furnish a true copy of any new trade name certificate or document issued to the manufacturer, or statement in lieu thereof, required by § 40.496.

(c) *Change in corporate name.* When there is a change in the corporate name of a manufacturer of processed tobacco, the manufacturer must, within 30 days of such change, make application on TTB F 5200.16 for an amended permit. The manufacturer must also furnish

such documents as may be necessary to establish that the corporate name has been changed.

§ 40.512 Change in ownership or control.

(a) *Fiduciary successor.* If an administrator, executor, receiver, trustee, assignee, or other fiduciary is to take over the business of a manufacturer of processed tobacco as a continuing operation, such fiduciary shall, before commencing operations, make application for a permit in accordance with this subpart, furnish certified copies, in duplicate, of the order of the court, or other pertinent documents, showing his appointment and qualification as such fiduciary, and make a commencing inventory in accordance with § 40.523. However, where a fiduciary intends only to liquidate the business, qualification as a manufacturer of processed tobacco will not be required if such fiduciary promptly files with the appropriate TTB officer a written statement to that effect, in duplicate.

(b) *Transfer of ownership.* If a transfer in ownership of the business of a manufacturer of processed tobacco (including a change of any member of a partnership or association) is to be made, such manufacturer shall give notice, in writing, to the appropriate TTB officer, naming the proposed successor and the desired effective date of the transfer. The proposed successor shall, before commencing operations, qualify as a manufacturer of processed tobacco in accordance with this subpart. The manufacturer shall give notice of the transfer, and the proposed successor shall make application for permit, in ample time for examination and approval thereof before the desired date of such change. The predecessor shall make a concluding inventory and concluding report, in accordance with §§ 40.523 and 40.522, respectively, and surrender the permit with such inventory and report. The successor shall make a commencing inventory and first report, in accordance with §§ 40.523 and 40.522, respectively.

(c) *Change in officers, directors, or stockholders of a corporation.* Upon election or appointment (excluding successive reelection or reappointment) of any officer or director of a corporation operating the business of a manufacturer of processed tobacco, or upon any occurrence that results in a person acquiring ownership or control of more than ten percent in aggregate of the outstanding stock of such corporation, the manufacturer shall, within 30 days of such action, so notify the appropriate TTB officer in writing, giving the identity of such person. When there is any change in the authority furnished under § 40.494 for officers to act in behalf of the corporation, the manufacturer shall immediately so notify the appropriate TTB officer in writing.

(d) *Change in control of corporation.* When the issuance, sale, or transfer of the stock of a corporation operating as a manufacturer of processed tobacco results in a change in the identity of the principal stockholders exercising actual or legal control of the operations of the corporation, the corporate manufacturer shall, within 30 days after the change occurs, make application on TTB F 5200.3 for a new permit. Otherwise, the present permit shall be automatically terminated at the expiration of such 30-day period, and the manufacturer shall dispose of all processed tobacco on hand, make a concluding inventory and concluding report, in accordance with the provisions of §§ 40.523 and 40.522, respectively, and surrender the permit with such inventory and report. If the application for a new permit is timely made, the present permit shall continue in effect pending final action with respect to such application.

§ 40.513 Change in location or address of factory.

Whenever a manufacturer of processed tobacco intends to relocate its factory, the manufacturer shall, before commencing operations at the new location, make application on TTB F 5200.16 for an amended permit. Whenever any change occurs in the address, but not the location, of the factory of a manufacturer of processed tobacco as a result of action of local authorities, the manufacturer shall, within 30 days of such change, make application on TTB F 5200.16 for an amended permit.

Operations by Manufacturers of Processed Tobacco

§ 40.521 Record of processed tobacco.

(a) Every manufacturer of processed tobacco and every manufacturer of tobacco products who removes processed tobacco from the factory for any purpose other than destruction must keep records of daily operations and transactions that show total quantity of processed tobacco:

(1) On hand;

(2) Used in the manufacture of tobacco products;

(3) Processed;

(4) Received, together with the name and address of the person from which it was received;

(5) Removed from the factory for shipment to a person holding a TTB permit as a manufacturer of processed tobacco, a manufacturer of tobacco products, or an export warehouse proprietor, together with the name and address of the person to whom shipped or delivered;

(6) Removed from the factory for shipment to a person not holding a TTB permit as a manufacturer of processed tobacco, a manufacturer of tobacco products, or an export warehouse proprietor;

(7) Removed from the factory for export;

(8) Removed for any purpose other than described in paragraphs (a)(5), (6), and (7) of this section;

(9) Lost, together with the circumstances of the loss; and

(10) Destroyed, together with the circumstances of the destruction.

(b) The records of any manufacturer of processed tobacco who removes processed tobacco from the factory for shipment to a person who does not hold a TTB permit as a manufacturer of processed tobacco, as a manufacturer of tobacco products, or as an export warehouse proprietor must include dated, commercial records that show the following information about each removal under this paragraph:

(1) The full name and address (including city and State) of the purchaser (or recipient, if there is no purchaser);

(2) The full name, address (including city and State), and driver's license number of the person picking up the processed tobacco for delivery;

(3) The license number of the vehicle in which the processed tobacco is removed from the manufacturer's premises;

(4) The street address of the destination of the processed tobacco;

(5) The quantity of processed tobacco in the shipment;

(6) A declaration by the purchaser (or recipient, if no purchaser) of the specific purpose of the purchase or receipt (for example, delivery to another, resale); and

(7) A declaration by the purchaser (or recipient, if no purchaser) of the name and address of his or her principal when acting as an agent.

(c) The entries in the records of removals required under this section must be made for each day by the close of the business day following the day on which the removal occurs. Although no particular format for the records in this section is prescribed, the required information must be readily ascertainable from the records kept.

(26 U.S.C. 5741)

§ 40.522 Reports.

(a) *General.* Every manufacturer of processed tobacco must prepare a monthly report on TTB F 5250.1 in accordance with the instructions for the form. The report must be prepared at the times specified in this section and must be prepared whether or not any operations or transactions occurred during the period covered by the report. The manufacturer must retain a copy of each report in accordance with the provisions of this subpart.

(b) *First report(s).* The first monthly report must be submitted by the 20th day of the month following the month in which the permit or authorization is issued. If the manufacturer is operating as a manufacturer of processed tobacco under the transitional rule set forth in § 40.493, the manufacturer must submit the first report by the 20th day of the month following the month in which TTB provides written acknowledgement of the receipt of the application filed under § 40.492. In the transitional case, the manufacturer must also submit reports for all previous months back to April 2009. For example, a manufacturer who receives an acknowledgement, dated July 17, 2009, must submit by August 15, 2009, a total of four reports, one each for April, May, June, and July 2009.

(c) *Reports of no activity.* Reports with the notation ''No Activity'' must be made for those months in which no activity occurs.

(d) *Reports of removals.* A manufacturer who removes processed tobacco for shipment to someone other than a person holding a TTB permit as a manufacturer of processed tobacco, a manufacturer of tobacco products, or an export warehouse proprietor must report such removal on TTB F 5250.2 by the close of the business day on the day following the removal, in accordance with the instructions on the form. A manufacturer operating under the transitional rule set forth in § 40.493 must also comply with the requirements of this paragraph.

(e) *Concluding report.* A concluding report, covering the period from the first of the month to the date of the concluding inventory, shall be made with such inventory.

(26 U.S.C. 5722)

§ 40.523 Inventories.

Every manufacturer of processed tobacco must provide a true and accurate inventory on TTB F 5210.9 in accordance with instructions for the form. The manufacturer must make such an inventory at the time of commencing business, at the time of transferring ownership, at the time of changing location of the factory, at the time of concluding business, and at such other time as any appropriate TTB officer may require. In the case of a manufacturer operating under the transitional rule set forth in § 40.493, that manufacturer must make an inventory within 10 days of the date of TTB's written acknowledgement of the receipt of the application filed under § 40.492. Each such inventory is subject to verification by the appropriate TTB officer.

(26 U.S.C. 5721)

§ 40.524 Retention of documents.

Every manufacturer of processed tobacco must retain all records and reports required under this subpart, including copies of permits, authorizations, inventories, and reports, for three years following the close of the calendar year in which filed or made, or in the case of an authorization, for three years following the close of the calendar year in which the operation under such authorization is concluded. Such records shall be made available for inspection by the appropriate TTB officer upon request.

(26 U.S.C. 5741)

§ 40.525 Discontinuance of operations.

Every manufacturer of processed tobacco who desires to discontinue operations and close a factory must dispose of all processed tobacco on hand, make a concluding inventory and concluding report, in accordance with the provisions of §§ 40.523 and 40.522, respectively, and surrender the permit to the appropriate TTB officer.

(26 U.S.C. 5721, 5722)

§ 40.526 Minimum manufacturing and activity requirements.

A permit to manufacture processed tobacco will only be granted to those persons engaged in the processing of tobacco. A permit may be suspended, and subsequently revoked, if the person has no activity under such permit for a period of one year. A person whose permit as a manufacturer of processed tobacco has been revoked for non-use, who wishes to engage in such business, must re-apply for such permit.

(26 U.S.C. 5712)

§ 40.527 Authorization to package processed tobacco.

A permit to manufacture processed tobacco does not authorize packaging of processed tobacco. Packaging of processed tobacco may only occur on the bonded premises of a manufacturer of tobacco products.

§ 40.528 Suspension and revocation of permit.

Where the appropriate TTB officer has reason to believe that a manufacturer of tobacco products has not in good faith complied with the provisions of 26 U.S.C. chapter 52, and regulations thereunder, or with any other provision of 26 U.S.C. with intent to defraud, or has violated any condition of his permit, or has failed to disclose any material information required or made any material false statement in the application for the permit, or is, by reason of previous or current legal proceedings involving a felony violation of any other provision of Federal criminal law relating to tobacco products, processed tobacco, cigarette paper, or cigarette tubes, not likely to maintain operations in compliance with 26 U.S.C. chapter 52, or has been convicted of a felony violation of any provision of Federal or State criminal law relating to tobacco products, processed tobacco, cigarette paper, or cigarette tubes, the appropriate TTB officer shall issue an order, stating the facts charged, citing such person to show cause why his permit should not be suspended or revoked. Such citation shall be issued and opportunity for hearing afforded in accordance with part 71 of this chapter, which part is applicable to such proceedings. If, after hearing, the hearing examiner, or on appeal, the Administrator, finds that such person has not shown cause why his permit should not be suspended or revoked, such permit shall be suspended for such period as the appropriate TTB officer deems proper or shall be revoked.

Other Provisions Relating to Manufacturers of Processed Tobacco

§ 40.531 Alternate methods or procedures.

(a) *General.* A manufacturer of processed tobacco, on specific approval by the appropriate TTB officer as provided in this section, may use an alternate method or procedure in lieu of a method or procedure specifically prescribed in this subpart. The appropriate TTB officer may approve an alternate method or procedure, subject to stated conditions, when the appropriate TTB officer finds that—

(1) Good cause has been shown for the use of the alternate method or procedure;

(2) The alternate method or procedure is within the purpose of, and consistent with the effect intended by, the specifically prescribed method or procedure, and

(3) The alternate method or procedure will not be contrary to any provision of

law, and will not result in an increase in cost to the Government or hinder the effective administration of this subpart.

(b) *Application.* A manufacturer of processed tobacco who desires to employ an alternate method or procedure must submit a written application to the appropriate TTB officer. The application shall specifically describe the proposed alternate method or procedure, and shall set forth the reasons therefor. An alternate method or procedure shall not be employed until the application has been approved by the appropriate TTB officer. The manufacturer shall, during the period of authorization of an alternate method or procedure, comply with the terms of the approved application. Authorization for any alternate method or procedure may be withdrawn whenever, in the judgment of the appropriate TTB officer, the effective administration of this part is hindered. Any authorization of the appropriate TTB officer under this section shall be retained as part of the manufacturer's records in accordance with this subpart.

§ 40.532 Emergency variations from requirements.

The appropriate TTB officer may approve methods of operation other than as specified in this subpart, where it is determined that an emergency exists and the proposed variations from the specified requirements are necessary, and provided that the proposed variations will not hinder the effective administration of this subpart and will not be contrary to any provision of law. Variations from requirements granted under this section are conditioned on compliance with the procedures, conditions, and limitations set forth in the approval of the application. Failure to comply in good faith with such procedures, conditions, and limitations will automatically terminate the authority for such variations, and the manufacturer of processed tobacco thereupon must fully comply with the prescribed requirements of the regulations from which the variations were authorized. Authority for any variation may be withdrawn whenever in the judgment of the appropriate TTB officer the effective administration of this subpart is hindered by the continuation of such variation. Where a manufacturer desires to employ such variation, the manufacturer must submit a written application to do so to the appropriate TTB officer. The application must describe the proposed variations and set forth the reasons therefor. Variations may not be employed until the application has been approved. Any authorization of the appropriate TTB officer under this section shall be retained as part of the manufacturer's records, in accordance with this subpart.

§ 40.533 Penalties and forfeitures.

Anyone who fails to comply with the provisions of this subpart may be liable to the civil and criminal penalties, and forfeitures, provided by law.

§ 40.534 Power of attorney.

If the application for permit or any report or other document required to be executed under this subpart is to be signed by an individual (including one of the partners for a partnership or one of the members of an association) as an attorney in fact for any person, or if an individual is to otherwise officially represent such person, power of attorney on TTB F 5000.8 shall be furnished to the appropriate TTB officer. Such power of attorney is not required for persons whose authority is furnished with the corporate documents as required by § 40.494. TTB F 5000.8 does not have to be filed again with the appropriate TTB officer where such form has previously been submitted to that appropriate TTB officer and is still in effect.

PART 41—IMPORTATION OF TOBACCO PRODUCTS, CIGARETTE PAPERS AND TUBES, AND PROCESSED TOBACCO

■ 23. The authority citation for part 41 is revised to read as follows:

Authority: 26 U.S.C. 5701–5705, 5708, 5712, 5713, 5721–5723, 5741, 5754, 5761–5763, 6301, 6302, 6313, 6402, 6404, 7101, 7212, 7342, 7606, 7651, 7652, 7805; 31 U.S.C. 9301, 9303, 9304, 9306.

■ 24. The heading for part 41 is revised to read as set forth above.

§ 41.1 [Amended]

■ 25. Section 41.1 is amended by removing the words ''and cigarette papers and tubes'' in the section heading and where they first appear in the text and adding, in their place in each case, the words '', cigarette papers and tubes, and processed tobacco''.

■ 26. In § 41.11:

■ a. The definition of ''Export warehouse'' is amended by adding the words ''or for the storage of processed tobacco,'' after ''paid,'';

■ b. The definition of ''Factory'' is amended by removing the words ''tobacco products or cigarette papers or tubes'' and adding, in their place, the words ''tobacco products, cigarette papers or tubes, or processed tobacco'';

■ c. The definition of ''Importer'' is amended by adding, after the words ''tobacco products or cigarette papers or tubes'', each time they appear, the words '', or any processed tobacco,''

■ d. The definition of ''Removal or remove'' is amended by adding after the words ''tobacco products or cigarette papers or tubes'' the words '', or any processed tobacco'';

■ e. The definition of ''Roll-your-own tobacco'' is amended by adding at the end before the period the words ''or cigars, or for use as wrappers thereof.''

■ f. New definitions of ''Manufacturer of processed tobacco'', ''Processed tobacco'' and ''Packaging'' are added in appropriate alphabetical order;

■ g. The definition of ''Package'' is revised; and

■ h. The definition of ''Sale price'' is amended by adding, after the words ''importer or'', the word ''United States''.

The additions and revision read as follows:

§ 41.11 Meaning of terms.

* * * * *

Manufacturer of processed tobacco. Any person who processes any tobacco other than tobacco products.

* * * * *

Package. The immediate container in which tobacco products, processed tobacco, or cigarette papers or tubes are put up by the manufacturer or the importer (prior to release from customs custody) and offered for sale or delivery to the ultimate consumer. For purposes of this definition, a container of processed tobacco, the contents of which weigh 10 pounds or less (including any added non-tobacco ingredients or constituents), that is removed within the meaning of this part is deemed to be a package offered for sale or delivery to the ultimate consumer.

Packaging. The act of placing processed tobacco or a tobacco product in a package.

* * * * *

Processed tobacco. Processed tobacco is any tobacco that has undergone processing, but does not include tobacco products. For purposes of this definition, the processing of tobacco does not include the farming or growing of tobacco or the handling of tobacco solely for sale, shipment, or delivery to a manufacturer of tobacco products or processed tobacco, nor does the processing of tobacco include curing, baling, or packaging activities. For purposes of this definition, the processing of tobacco includes, but is not limited to, stemming (that is,

removing the stem from the tobacco leaf), fermenting, threshing, cutting, or flavoring the tobacco, or otherwise combining the tobacco with non-tobacco ingredients.

* * * * *

■ 27. Section 41.30 is amended by designating the existing text as paragraph (a), and by adding a heading to newly designated paragraph (a) and adding a new paragraph (b), to read as follows:

§ 41.30 Pipe tobacco and roll-your-own tobacco.

(a) *Tax rates.* * * *

(b) *Classification.* (1) Pipe tobacco and roll-your-own tobacco, before removal subject to tax, must be put up in packages that conform to the requirements of § 41.71 and of § 41.72a or § 41.72b as appropriate.

(2) Any tobacco that has been processed and that is removed in a package, as that term is defined in § 41.11, that does not bear the notice for smokeless tobacco prescribed in § 41.72 or the notice for pipe tobacco prescribed in § 41.72a is deemed to be roll-your-own tobacco and subject to tax at the rate applicable to roll-your-own tobacco.

(3) Any tobacco that has been processed and that is removed in a package, as that term is defined in § 41.11, is deemed to be roll-your-own tobacco and subject to tax at the rate applicable to roll-your-own tobacco, even though the package bears the notice required for pipe tobacco under § 41.72a, if:

(i) The package does not bear the declaration ''pipe tobacco'' in direct conjunction with, parallel to, and in substantially the same conspicuousness of type and background as the brand name each time the brand name appears on the package; or

(ii) The package or accompanying materials bear any representation that would suggest a use other than as pipe tobacco.

(26 U.S.C. 5702 and 5723)

■ 28. Section 41.71 is amended by adding a sentence at the end and by revising the statutory citations. The addition and revision read as follows:

§ 41.71 Package.

* * * No person may purchase, receive, possess (except for personal consumption), offer for sale, or sell or otherwise dispose of, after removal, any tobacco products that are not put up in packages bearing the marks, labels, and notices, as required under this part.

(26 U.S.C. 5723 and 5751)

§ 41.72a [Amended]

■ 29. In § 41.72a, paragraph (a), is amended by removing the last sentence.

■ 30. In § 41.72b, paragraph (a) and the Office of Management and Budget control number reference are revised to read as follows:

§ 41.72b Notice for roll-your-own tobacco.

(a) *Product designation.* Every package of roll-your-own tobacco, before removal subject to tax, must have adequately imprinted on it, or on a label securely affixed to it, the applicable designation ''roll-your-own tobacco'', ''cigarette tobacco'', ''cigarette wrapper'', ''cigar tobacco'' or ''cigar wrapper''.

* * * * *

(Approved by the Office of Management and Budget under control number 1513–0091)

■ 31. Section 41.72c is revised to read as follows:

§ 41.72c Package use-up rule.

(a) An importer of pipe tobacco or roll-your-own tobacco may remove packages of such products bearing the designation ''Tax Class L'' (to designate pipe tobacco) or ''Tax Class J'' (to designate roll-your-own tobacco) only if similar packages had been removed by that importer prior to April 1, 2009, and such importer may continue to remove packages bearing such designations until August 1, 2009.

(b) An importer may, until August 1, 2009, remove roll-your-own tobacco for which the applicable designation is ''cigar tobacco,'' ''cigarette wrapper,'' or ''cigar wrapper'' even if the packages of such products do not meet the requirements of § 41.72(b).

§ 41.192 [Removed and Reserved]

■ 32. Section 41.192 is removed and reserved.

■ 33. Section 41.201 is revised to read as follows:

§ 41.201 Duration of permit.

Permits issued under this section will be valid for a period of three years from the effective date shown on the permit. The expiring permit will continue in effect until final action is taken by TTB on the application for renewal, provided a timely application for renewal is filed.

■ 34. Section 41.202 is revised to read as follows:

§ 41.202 Renewal of permit.

(a) *General.* Importers wishing to continue operations beyond the expiration of their current permit must renew their permit by making application within 30 days of such expiration.

(b) *Minimum activity requirement.* A permit to import tobacco products will only be renewed for those persons who have engaged in the importing of tobacco products under the current permit in the one year period prior to the application to renew.

§ 41.205 [Removed and Reserved]

■ 35. Section 41.205 is removed and reserved.

■ 36. Section 41.206 is revised to read as follows:

§ 41.206 Reports.

(a) *General.* Importers must file a monthly report on TTB F 5220.6 in accordance with the instructions for the form.

(b) *First report.* The first monthly report must be submitted by the 15th day of the month following the month in which the permit is issued.

(c) *Reports of no activity.* Reports with the notation ''No Activity'' must be made for those months in which no activity occurs.

(d) *Concluding report.* When a transfer of ownership of the business of an importer of tobacco products described in § 41.224, or when a change in control of a corporation described in § 41.226 occurs, a concluding report with the notation ''Concluding Report'' must be made for the month or partial month during which the transfer of ownership or change in control becomes effective. A concluding report must also be made for the month or partial month during which an importer concludes operations under the permit.

§ 41.207 [Removed and Reserved]

■ 37. Section 41.207 is removed and reserved.

■ 38. Section 41.208 is revised to read as follows:

§ 41.208 Maintenance and retention of records and reports.

(a) *Maintenance.* All records, reports, and other documents required under this part must be maintained separately, chronologically by transaction or reporting date, at the importer's principal place of business. The appropriate TTB officer may, pursuant to an application by the importer for an approved alternate method or procedure under § 41.26, authorize such documents to be maintained at another business location under the control of the importer, if the conditions of § 41.26 are met and provided that the use of the alternate location does not cause undue inconvenience to TTB when attempting to examine the files and does not delay the timely transmittal of any document required to be submitted to TTB.

(b) *Retention.* All records and reports and documents or copies of documents supporting these records or reports required by this part to be submitted to TTB or retained by the importer must be retained for not less than three years following the close of the calendar year in which filed or made. Such records, reports, and other documents must be available for inspection by the appropriate TTB officer upon request. Furthermore, the appropriate TTB officer may require these records, reports, and other documents to be kept for an additional period of not more than three years in any case where it is necessary to protect the revenue.

■ 39. A new subpart M, consisting of §§ 41.231 through 41.273, is added to read as follows:

Subpart M—Importation of Processed Tobacco

Sec.

Qualification Requirements for Importers of Processed Tobacco

41.231 Persons required to qualify.
41.232 Application for permit or amendment of existing permit.
41.233 Transitional rule.
41.234 Corporate documents.
41.235 Articles of partnership or association.
41.236 Trade name certificate.
41.237 Additional information.
41.238 Investigation of applicant.
41.239 Notice of contemplated disapproval.
41.240 Issuance of permit.
41.241 Duration of permit.
41.242 Renewal of permit.
41.243 Retention of permit and supporting documents.

Changes After Original Qualification

41.251 Change in name.
41.252 Change in ownership or control.
41.253 Change in location or address.

Operations of Importers of Processed Tobacco

41.261 Records.
41.262 Reports.
41.263 Maintenance of records and reports.

Other Provisions Applicable to Importers of Processed Tobacco

41.271 Power of attorney.
41.272 Cross reference.
41.273 Suspension and revocation of permit.

Subpart M—Importation of Processed Tobacco

Qualification Requirements for Importers of Processed Tobacco

§ 41.231 Persons required to qualify.

Except as otherwise provided in § 41.233, every person, before commencing business as an importer of processed tobacco, must apply for, and obtain, either a permit as an importer of processed tobacco or, if the person holds a TTB permit as an importer of tobacco products, an amendment to the existing permit authorizing the importation of processed tobacco under such permit, in accordance with the provisions of this subpart.

§ 41.232 Application for permit or amendment of existing permit.

(a) *Application for permit.* Any person who intends to engage in the business of importing processed tobacco, and who is not engaged in the business of importing tobacco products, must apply for a permit by completing and submitting TTB F 5230.4 in accordance with the instructions on that form. All documents required under this subpart to be furnished with the application must be included with the application when it is submitted. If the appropriate TTB officer determines that the application is incomplete and, for that reason, does not include sufficient information for TTB to make a decision on the application, and if the applicant has not provided the missing information within one year of a written request for it or within any shorter time period specified in the written request, the application will be deemed abandoned and the applicant will be notified in writing that no permit will be issued in response to the incomplete application. In the case of an application filed in accordance with § 41.233, such notification will constitute the final action on the application and such party will no longer be able to continue as an importer of processed tobacco.

(b) *Application for amendment of existing permit.* Any person who holds a TTB permit as an importer of tobacco products may also qualify to engage in business as an importer of processed tobacco under the same permit by making application on TTB F 5230.5 for an amended permit.

§ 41.233 Transitional rule.

(a) Any person who:

(1) On April 1, 2009, had already been engaged in business as an importer of processed tobacco; and

(2) Before June 30, 2009, submits an application for a permit or an amendment of an existing permit, as provided in § 41.232, to engage in such business, may continue to engage in that business pending final action on the application.

(b) Pending final action on the application, all provisions of chapter 52 of the Internal Revenue Code of 1986 shall apply to the applicant in the same manner and to the same extent as if the applicant were a holder of a permit as an importer of processed tobacco or an amended permit authorizing the importation of processed tobacco under chapter 52 and this subpart. Upon receipt of an application, the appropriate TTB officer will provide the applicant with a written acknowledgement that may be used for a limited period as confirmation of TTB authorization to engage in such business of an importer of processed tobacco.

§ 41.234 Corporate documents.

Every corporation that files an application for a permit as an importer of processed tobacco must furnish with its application for the permit required by § 41.231 a true copy of the corporate charter or a certificate of corporate existence or incorporation executed by the appropriate officer of the State in which incorporated. The corporation must likewise furnish duly authenticated extracts of the stockholders' meetings, bylaws, or directors' meetings, listing the offices the incumbents of which are authorized to sign documents or otherwise act in behalf of the corporation in matters relating to 26 U.S.C. chapter 52, and regulations issued thereunder. The corporation must also furnish evidence, in duplicate, of the identity of the officers and directors and each person who holds more than ten percent of the stock of such corporation. Where any of the information required by this section has previously been filed with the appropriate TTB officer and such information is currently complete and accurate, a written statement to that effect will be sufficient for the purpose of this section.

§ 41.235 Articles of partnership or association.

Every partnership or association that files an application for a permit as an importer of processed tobacco must furnish with its application for the permit required by § 41.231 a true copy of the articles of partnership or association, if any, or certificate of partnership or association where required to be filed by any State, county, or municipality. Where a partnership or association has previously filed such documents with the appropriate TTB officer and such documents are currently complete and accurate, a written statement, in duplicate, to that effect by the partnership or association will be sufficient for the purpose of this section.

§ 41.236 Trade name certificate.

Every person that files an application for a permit as an importer of processed tobacco operating under a trade name

must furnish with the application for the permit required by § 41.231 a true copy of the certificate or other document, if any, issued by a State, county, or municipal authority in connection with the transaction of business under such trade name. If no such certificate or other document is so required, a written statement, in duplicate, to that effect by such person will be sufficient for the purpose of this section.

§ 41.237 Additional information.

The appropriate TTB officer may require such additional information as deemed necessary to determine whether the applicant is entitled to obtain either a permit as an importer of tobacco products or, if holding a permit as an importer of processed tobacco, an amended permit authorizing the importation of processed tobacco, under this subpart. The applicant must, when required by the appropriate TTB officer, furnish as a part of the application for the permit or authorization such additional information as may be necessary for the appropriate TTB officer to determine whether the applicant is entitled to a permit or an amended permit.

§ 41.238 Investigation of applicant.

Appropriate TTB officers may inquire or investigate to verify the information in connection with an application for a permit. The investigation will ascertain whether the applicant is eligible for a permit. A permit may be denied if the applicant (including, in the case of a corporation, any officer, director, or principal stockholder and, in the case of a partnership, a partner)—

(a) Is, by reason of his business experience, financial standing, or trade connections or by reason of previous or current legal proceedings involving a felony violation of any other provision of Federal criminal law relating to tobacco products, processed tobacco, cigarette paper, or cigarette tubes, not likely to maintain operations in compliance with this chapter;

(b) Has been convicted of a felony violation of any provision of Federal or State criminal law relating to tobacco products, processed tobacco, cigarette paper, or cigarette tubes; or

(c) Has failed to disclose any material information required or made any material false statement in the application therefor.

§ 41.239 Notice of contemplated disapproval.

If the appropriate TTB officer has reason to believe that the applicant is not entitled to a permit, the appropriate TTB officer will promptly give to the applicant notice of the contemplated disapproval of the application and opportunity for hearing thereon in accordance with part 71 of this chapter. If, after such notice and opportunity for hearing, the appropriate TTB officer finds that the applicant is not entitled to a permit, an order will be prepared stating the findings on which the application is denied.

§ 41.240 Issuance of permit.

If the application for the permit required under this subpart is approved, the appropriate TTB officer will issue a permit on TTB F 5200.24 to the applicant as an importer of processed tobacco.

§ 41.241 Duration of permit.

A permit issued under § 41.240 of this part will be valid for a period of three years from the effective date shown on the permit.

§ 41.242 Renewal of permit.

(a) *General.* Importers of processed tobacco wishing to continue operations beyond the expiration of their current permit must renew their permit by making application within 30 days of the expiration date on the permit, in accordance with instructions for the permit form. The expiring permit will continue in effect until final action is taken by TTB on the application for renewal, provided a timely application for renewal is filed.

(b) *Minimum activity requirement.* A permit to import processed tobacco will only be renewed for those persons who have engaged in the importing of processed tobacco under the current permit in the one year period prior to the application to renew.

§ 41.243 Retention of permit and supporting documents.

The importer of processed tobacco must retain the permit, together with the copy of the application and supporting documents returned with the permit, at the same place where the records required by this subpart are kept. The permit and supporting documents must be made available for inspection by any appropriate TTB officer upon request.

Changes After Original Qualification

§ 41.251 Change in name.

(a) *Change in individual name.* When there is a change in the name of an individual operating under a permit as an importer of processed tobacco, the importer must, within 30 days of such change, make application on TTB F 5230.5 for an amended permit.

(b) *Change in trade name.* When there is a change in a trade name used by an importer of processed tobacco in connection with operations authorized by the permit, the importer must, within 30 days of such change, make application on TTB F 5230.5 for an amended permit to reflect such change. This requirement also applies to the addition or discontinuance of a trade name. The importer must also furnish a true copy of any new trade name certificate or document issued to the importer, or statement in lieu thereof, required by § 41.236.

(c) *Change in corporate name.* When there is a change in the corporate name of an importer of processed tobacco, the importer must, within 30 days of such change, make application on TTB F 5230.5 for an amended permit. The importer must also furnish such documents as may be necessary to establish that the corporate name has been changed.

§ 41.252 Change in ownership or control.

(a) *Fiduciary successor.* If an administrator, executor, receiver, trustee, assignee, or other fiduciary is to take over the business of an importer of processed tobacco as a continuing operation, such fiduciary shall, before commencing operations, make application for permit in accordance with § 41.232, furnish certified copies, in duplicate, of the order of the court, or other pertinent documents, showing his appointment and qualification as such fiduciary. However, where a fiduciary intends only to liquidate the business, qualification as an importer of processed tobacco will not be required if he promptly files with the appropriate TTB officer a written statement to that effect.

(b) *Transfer of ownership.* If a transfer in ownership of the business of an importer of processed tobacco (including a change of any member of a partnership or association) is to be made, such importer shall give notice, in writing, to the appropriate TTB officer, naming the proposed successor and the desired effective date of the transfer. The proposed successor must, before commencing operations, qualify as an importer of processed tobacco in accordance with this subpart. The importer must give notice of the transfer, and the proposed successor must make application for permit, in ample time for examination and approval thereof before the desired date of such change. The predecessor must make a concluding report, in accordance with § 41.262, and surrender the permit with the report. The successor must

make a first report, in accordance with § 41.262.

(c) *Change in officers, directors, or stockholders of a corporation.* Upon election or appointment (excluding successive reelection or reappointment) of any officer or director of a corporation operating as an importer of processed tobacco, or upon any occurrence that results in a person acquiring ownership or control of more than ten percent in aggregate of the outstanding stock of such corporation, the importer shall, within 30 days of such action, so notify the appropriate TTB officer in writing, giving the identity of such person. When there is any change in the authority furnished under § 41.271 for officers to act on behalf of the corporation, the importer must immediately so notify the appropriate TTB officer in writing.

(d) *Change in control of corporation.* When the issuance, sale, or transfer of the stock of a corporation operating as an importer of processed tobacco results in a change in the identity of the principal stockholders exercising actual or legal control of the operations of the corporation, the corporate manufacturer must, within 30 days after the change occurs, make application on TTB F 5230.4 for a new permit. Otherwise, the present permit shall be automatically terminated at the expiration of such 30-day period, and the importer must make a concluding report, in accordance with § 41.262, and surrender the permit with the report. If the application for a new permit is timely made, the present permit will continue in effect pending final action with respect to such application.

§ 41.253 Change in location or address.

Whenever an importer of processed tobacco intends to relocate the principal business office, the importer must, before commencing operations at the new location, make application on TTB F 5230.5, and obtain an amended permit. Whenever any change occurs in the address, but not the location, of the principal business office of an importer of processed tobacco, as a result of action of local authorities, the importer must, within 30 days of such change, make application on TTB F 5230.5 for an amended permit.

Operations of Importers of Processed Tobacco

§ 41.261 Records.

(a) Any person who imports, or who knowingly causes to be imported, processed tobacco must make and keep records of operations and transactions. A person purchasing processed tobacco from the importer in a domestic transaction and who does not knowingly cause the processed tobacco to be imported is not required to make and keep records unless the terms and conditions of the importation are controlled by the person placing the order with the importer (for example, the importer is not an independent contractor but the agent of the person placing the order). Records maintained must reflect the date and quantity of processed tobacco:

(1) Imported;

(2) Received otherwise than through importation;

(3) Returned to customs custody;

(4) Transferred or sold to a person who holds a TTB permit as an importer or manufacturer of tobacco products or of processed tobacco or as an export warehouse proprietor;

(5) Transferred or sold to a person who does not hold a TTB permit as an importer or manufacturer of tobacco products or of processed tobacco or as an export warehouse proprietor; and

(6) Lost or destroyed.

(b) The records of any importer who transfers or sells processed tobacco to a person who does not hold a TTB permit as an importer or manufacturer of tobacco products or of processed tobacco or as an export warehouse proprietor must include dated, commercial records that show the following information about each removal:

(1) The full name and address (including city and State) of the purchaser (or recipient, if there is no purchaser);

(2) The full name, address (including city and State), and driver's license number of the person picking up the processed tobacco for delivery;

(3) The license number of the vehicle in which the processed tobacco is picked up for delivery to purchaser or transferee;

(4) The street address of the destination of the processed tobacco;

(5) The quantity of processed tobacco in the shipment;

(6) A declaration by the purchaser (or recipient, if no purchaser) of the specific purpose of the purchase or receipt (for example, delivery to another, resale); and

(7) A declaration by the purchaser (or recipient, if no purchaser) of the name and address of his or her principal when acting as an agent.

(c) The entries in the records required under this section must be made for each day by the close of the business day following the day on which the transfer or sale occurs. Although no particular format for the records is prescribed, the required information must be readily ascertainable from the records kept.

(d) An importer operating under the transitional rule, set forth in § 41.233, must also comply with the requirements of this section.

(26 U.S.C. 5741)

§ 41.262 Reports.

(a) *General.* Every importer of processed tobacco must prepare a monthly report on TTB F 5220.6 in accordance with the instructions for the form. The report must be prepared at the times specified in this section and must be prepared whether or not any operations or transactions occurred during the period covered by the report. The importer must retain a copy of each report in accordance with the provisions of this subpart.

(b) *First report(s).* The first monthly report must be submitted by the 15th day of the month following the month in which the permit is issued. If the importer is operating as an importer of processed tobacco under the transitional rule in accordance with § 41.233, the importer must submit the first report by the 15th day of the month following the month in which TTB provides written acknowledgement of the receipt of the application filed under § 41.232.

(c) *Reports of no activity.* Reports with the notation ''No Activity'' must be made for those months in which no activity occurs.

(d) *Reports of sales and transfers.* An importer who transfers or sells processed tobacco to someone other than a person holding a TTB permit as an importer or manufacturer of processed tobacco or tobacco products or as an export warehouse proprietor must report such sale or transfer on TTB F 5250.2 by the close of the business day on the day following the transfer or sale, in accordance with the instructions on the form. An importer operating under the transitional rule set forth in § 41.233 must comply with the requirements of this paragraph.

(e) *Concluding report.* When a transfer of ownership of the business of an importer of processed tobacco described in § 41.252(b) occurs, or when a change in control of a corporation described in § 41.252(d) occurs, a concluding report with the notation ''Concluding Report'' must be made for the month or partial month during which the transfer of ownership or change in control becomes effective. A concluding report must also be made for the month or partial month during which an importer concludes operations under the permit or authorization.

(26 U.S.C. 5722)

§ 41.263 Maintenance of records and reports.

All records and reports required by this subpart must be maintained separately, chronologically by transaction or reporting date, at the importer's principal place of business. The appropriate TTB officer may, pursuant to a written request, authorize files, or an individual file, to be maintained at another business location under the control of the importer, provided that the alternative location does not cause undue inconvenience to TTB when attempting to examine the files and does not delay the timely transmittal of any documents required to be submitted to TTB.

(26 U.S.C. 5741)

Other Provisions Applicable to Importers of Processed Tobacco

§ 41.271 Power of attorney.

If the application for a permit or authorization or any report or other document required to be executed under this subpart is to be signed by an individual (including one of the partners for a partnership or one of the members of an association) as an attorney in fact for any person, or if an individual is otherwise to officially represent such person, power of attorney on TTB F 5000.8 shall be furnished to the appropriate TTB officer. Such power of attorney is not required for persons whose authority is furnished with the corporate documents as required by § 41.234. Form 5000.8 does not have to be filed again with an appropriate TTB officer where such form has previously been submitted to TTB and is still in effect.

§ 41.272 Cross reference.

For other applicable provisions pertaining to forms prescribed, retention of records, interference with administration, alternate methods or procedures, emergency variations from requirements, penalties and forfeitures, and delegations of the Administrator, see subpart C of this part.

§ 41.273 Suspension and revocation of permit.

Where the appropriate TTB officer has reason to believe that an importer of processed tobacco has not in good faith complied with the provisions of 26 U.S.C. chapter 52, and regulations thereunder, or with any other provision of 26 U.S.C. with intent to defraud, or has violated any condition of his permit, or has failed to disclose any material information required or made any material false statement in the application for the permit, or is, by reason of previous or current legal proceedings involving a felony violation of any other provision of Federal criminal law relating to tobacco products, processed tobacco, cigarette paper, or cigarette tubes, not likely to maintain operations in compliance with 26 U.S.C. chapter 52, or has been convicted of a felony violation of any provision of Federal or State criminal law relating to tobacco products, processed tobacco, cigarette paper, or cigarette tubes, the appropriate TTB officer shall issue an order, stating the facts charged, citing such person to show cause why his permit should not be suspended or revoked. Such citation shall be issued and opportunity for hearing afforded in accordance with part 71 of this chapter, which part is applicable to such proceedings. If, after hearing, the hearing examiner, or on appeal, the Administrator, finds that such person has not shown cause why his permit should not be suspended or revoked, such permit shall be suspended for such period as the appropriate TTB officer deems proper or shall be revoked.

PART 44—EXPORTATION OF TOBACCO PRODUCTS AND CIGARETTE PAPERS AND TUBES, WITHOUT PAYMENT OF TAX, OR WITH DRAWBACK OF TAX

■ 40. The authority citation for part 44 is revised to read as follows:

Authority: 26 U.S.C. 5701–5705, 5711–5713, 5721–5723, 5731, 5741, 5751, 5754, 6061, 6065, 6151, 6402, 6404, 6806, 7011, 7212, 7342, 7606, 7805; 31 U.S.C. 9301, 9303, 9304, 9306.

■ 41. In § 44.11:

■ a. The definition of ''Export warehouse'' is amended by removing the words ''tobacco products and cigarette papers and tubes'' and adding, in their place, the words ''tobacco products or cigarette papers or tubes or any processed tobacco'';

■ b. The definition of ''package'' is revised;

■ c. A new definition of ''Processed tobacco'' is added in appropriate alphabetical order; and

■ d. The definition of ''Roll-your-own tobacco'' is amended by adding at the end before the period the words ''or cigars, or for use as wrappers thereof.''

The addition and revision read as follows:

§ 44.11 Meaning of terms.

* * * * *

Package. The immediate container in which tobacco products, processed tobacco, or cigarette papers or tubes are put up by the manufacturer and offered for sale or delivery to the ultimate consumer. For purposes of this definition, a container of processed tobacco, the contents of which weigh 10 pounds or less (including any added non-tobacco ingredients or constituents), that is removed within the meaning of this part, is deemed to be a package offered for sale or delivery to the ultimate consumer.

* * * * *

Processed tobacco. Processed tobacco is any tobacco that has undergone processing, but does not include tobacco products. For purposes of this definition, the processing of tobacco does not include the farming or growing of tobacco or the handling of tobacco solely for sale, shipment, or delivery to a manufacturer of tobacco products or processed tobacco, nor does the processing of tobacco include curing, baling, or packaging activities. For purposes of this definition, the processing of tobacco includes, but is not limited to, stemming (that is, removing the stem from the tobacco leaf), fermenting, threshing, cutting, or flavoring the tobacco, or otherwise combining the tobacco with non-tobacco ingredients.

§ 44.90 [Removed and Reserved]

■ 42. Section § 44.90 is removed and reserved.

■ 43. Section § 44.141a is added to read as follows:

§ 44.141a Use of premises.

Export warehouse premises may only be used for the storage of tobacco products and cigarette papers and tubes, upon which the Internal Revenue tax has not been paid, for subsequent removal under this part, and for the storage of processed tobacco pending export.

§ 44.142 [Amended]

■ 44. Section 44.142 is amended in the first sentence of paragraph (e) by adding the words '', and any processed tobacco'' after the words ''cigarette papers and tubes'', and by revising the Office of Management and Budget control number reference to read, ''(Approved by the Office of Management and Budget under control number 1513–0070)''.

§ 44.147 [Amended]

■ 45. In § 44.147 the first sentence is amended by removing the words ''tobacco products, and cigarette papers and tubes'' and adding, in their place, the words, ''tobacco products, cigarette papers and tubes, and any processed tobacco''.

PART 45—REMOVAL OF TOBACCO PRODUCTS AND CIGARETTE PAPERS AND TUBES, WITHOUT PAYMENT OF TAX, FOR USE OF THE UNITED STATES

■ 46. The authority citation for part 45 is revised to read as follows:

Authority: 26 U.S.C. 5702–5705, 5723, 5741, 5751, 5762, 5763, 6313, 7212, 7342, 7606, 7805; 44 U.S.C. 3504(h).

■ 47. In § 45.11,
■ a. The definition of ''Roll-your-own tobacco'' is amended by adding at the end before the period the words ''or cigars, or for use as wrappers thereof''; and
■ b. The definition of ''Package'' is revised to read as follows:

§ 45.11 Meaning of terms.

* * * * *

Package. The immediate container in which tobacco products, processed tobacco, or cigarette papers or tubes are put up by the manufacturer and offered for sale or delivery to the ultimate consumer. For purposes of this definition, a container of processed tobacco, the contents of which weigh 10 pounds or less (including any added non-tobacco ingredients or constituents), that is removed within the meaning of this part, is deemed to be a package offered for sale or delivery to the ultimate consumer.

* * * * *

§ 45.45a [Amended]

■ 48. In § 45.45a, paragraph (a) is amended by removing the last sentence.
■ 49. In § 45.45b, paragraph (a) and the Office of Management and Budget control number reference at the end are revised to read as follows:

§ 45.45b Notice for roll-your-own tobacco.

(a) *Product designation.* Every package of roll-your-own tobacco, before removal subject to tax, must have adequately imprinted on it, or on a label securely affixed to it, the applicable designation ''roll-your-own tobacco'', ''cigarette tobacco'', ''cigar tobacco'', ''cigarette wrapper'', or ''cigar wrapper''.

* * * * *

(Approved by the Office of Management and Budget under control number 1513–0091)

■ 50. Section 45.45c is revised to read as follows:

§ 45.45c Package use-up rule.

(a) A manufacturer of pipe tobacco or roll-your-own tobacco may remove packages of such products bearing the designation ''Tax Class L'' (to designate pipe tobacco) or ''Tax Class J'' (to designate roll-your-own tobacco) only if such packages were in use prior to April 1, 2009, and such manufacturer may continue to remove packages bearing those designations until July 1, 2009.

(b) A manufacturer may, until August 1, 2009, remove roll-your-own tobacco for which the applicable designation is ''cigar tobacco,'' ''cigarette wrapper,'' or ''cigar wrapper'' even if the packages of such products do not meet the requirements of § 40.216(b).

Signed: April 15, 2009.

John J. Manfreda,

Administrator.

Approved: May 26, 2009.

Timothy E. Skud,

Deputy Assistant Secretary (Tax, Trade, and Tariff Policy).

[FR Doc. E9–14546 Filed 6–19–09; 8:45 am]

BILLING CODE 4810–31–P

DEPARTMENT OF DEFENSE

Department of the Navy

32 CFR Part 706

Certifications and Exemptions Under the International Regulations for Preventing Collisions at Sea, 1972

AGENCY: Department of the Navy, DoD.

ACTION: Final rule.

SUMMARY: The Department of the Navy is amending its certifications and exemptions under the International Regulations for Preventing Collisions at Sea, 1972 (72 COLREGS), to reflect that the Deputy Assistant Judge Advocate General (Admiralty and Maritime Law) has determined that USS INDEPENDENCE (LCS 2) is a vessel of the Navy which, due to its special construction and purpose, cannot fully comply with certain provisions of the 72 COLREGS without interfering with its special function as a naval ship. The intended effect of this rule is to warn mariners in waters where 72 COLREGS apply.

DATES: This rule is effective June 22, 2009 and is applicable beginning June 11, 2009.

FOR FURTHER INFORMATION CONTACT: Lieutenant Commander Ted Cook, JAGC, U.S. Navy, Admiralty Attorney, (Admiralty and Maritime Law), Office of the Judge Advocate General, Department of the Navy, 1322 Patterson Ave., SE., Suite 3000, Washington Navy Yard, DC 20374–5066, telephone number: 202–685–5040.

SUPPLEMENTARY INFORMATION: Pursuant to the authority granted in 33 U.S.C. 1605, the Department of the Navy amends 32 CFR part 706.

This amendment provides notice that the Deputy Assistant Judge Advocate General (Admiralty and Maritime Law), under authority delegated by the Secretary of the Navy, has certified that USS INDEPENDENCE (LCS 2) is a vessel of the Navy which, due to its special construction and purpose, cannot fully comply with the following specific provisions of 72 COLREGS without interfering with its special function as a naval ship: Annex I paragraph 2 (a)(i), pertaining to the location of the forward masthead light at a height not less than 12 meters above the hull; Annex I, paragraph 3(a), pertaining to the location of the forward masthead light in the forward quarter of the ship, and the horizontal distance between the forward and after masthead lights; Annex I, paragraph 2(f)(i), pertaining to the placement of the masthead light or lights above and clear of all other lights and obstructions; Annex I, paragraph 3(c), pertaining to the task light's horizontal distance from the fore and aft centerline of the vessel in the athwartship direction; and Rule 21(a), pertaining to the arc of visibility of the aft masthead light. The Deputy Assistant Judge Advocate General (Admiralty and Maritime Law) has also certified that the lights involved are located in closest possible compliance with the applicable 72 COLREGS requirements.

Moreover, it has been determined, in accordance with 32 CFR parts 296 and 701, that publication of this amendment for public comment prior to adoption is impracticable, unnecessary, and contrary to public interest since it is based on technical findings that the placement of lights on this vessel in a manner differently from that prescribed herein will adversely affect the vessel's ability to perform its military functions.

List of Subjects in 32 CFR Part 706

Marine safety, Navigation (water), and Vessels.

■ For the reasons set forth in the preamble, the Navy amends part 706 of title 32 of the Code of Federal Regulations as follows:

PART 706—CERTIFICATIONS AND EXEMPTIONS UNDER THE INTERNATIONAL REGULATIONS FOR PREVENTING COLLISIONS AT SEA, 1972

■ 1. The authority citation for part 706 continues to read as follows:

Authority: 33 U.S.C. 1605.

■ 2. Section 706.2 is amended as follows:

■ A. In Table One by adding, in alpha numerical order by vessel number, an entry for USS INDEPENDENCE (LCS 2);
■ B. In Table Four, Paragraph 15 by adding, in alpha numerical order by vessel number, an entry for USS INDEPENDENCE (LCS 2);
■ C. In Table Four, Paragraph 16 by adding, in alpha numerical order by vessel number, an entry for USS INDEPENDENCE (LCS 2); and
■ D. In Table Five by adding, in alpha numerical order by vessel number, an entry for USS INDEPENDENCE (LCS 2).
■ The additions read as follows:

§ 706.2 Certifications of the Secretary of the Navy Under Executive Order 11964 and 33 U.S.C. 1605.

* * * * *

TABLE ONE

Vessel	Number	Distance in meters of forward masthead light below minimum required height. § 2(a)(i) Annex I
*	*	*
USS INDEPENDENCE	LCS 2	4.91
*	*	*

* * * * *

Table Four

15. * * *

* * * * *

Vessel	Number	Horizontal distance from the fore and aft centerline of the vessel in the athwart-ship direction
*	*	*
USS INDEPENDENCE	LCS 2	1.31 meters.
*	*	*

* * * * *

16. * * *

Vessel	Number	Obstruction angle relative ship's headings
*	*	*
USS INDEPENDENCE	LCS 2	71° thru 73°. 76° thru 78°. 287° thru 289°.
*	*	*

* * * * *

TABLE FIVE

Vessel	Number	Masthead lights not over all other lights and obstructions. Annex I, sec. 2(f)	Forward masthead light not in forward quarter of ship. Annex I, sec. 3(a)	After masthead light less than ½ ship's length aft of forward masthead light. Annex I, sec. 3(a)	Percentage horizontal separation attained
*	*	*	*	*	*
USS INDEPENDENCE	LCS 2		X	X	18.8
*	*	*	*	*	*

* * * * *

Approved: June 11, 2009.

M. Robb Hyde,

Commander, JAGC, U.S. Navy, Deputy Assistant Judge Advocate, General (Admiralty and Maritime Law).

[FR Doc. E9–14526 Filed 6–19–09; 8:45 am]

BILLING CODE 3810–FF–P

DEPARTMENT OF HOMELAND SECURITY

Coast Guard

33 CFR Part 117

[Docket No. USCG–2009–0449]

RIN 1625–AA09

Drawbridge Operation Regulation; Mermentau River, Mile 68.0, at Mermentau, Acadia and Jefferson Davis Parishes, LA

AGENCY: Coast Guard, DHS.

ACTION: Notice of temporary deviation from regulations.

SUMMARY: The Commander, Eighth Coast Guard District, has issued a temporary deviation from the regulation governing the operation of the BNSF Swing Bridge across the Mermentau River, mile 68.0, in Mermentau, Acadia and Jefferson Davis Parishes, Louisiana. The deviation is necessary to repair the pinion gear that turns the center pivot pier of the bridge. This deviation allows the bridge to remain closed for 34 hours to accomplish the work.

DATES: This deviation is effective from 5 a.m. on June 29, 2009 until 5 p.m. on June 30, 2009.

ADDRESSES: Documents mentioned in this preamble as being available in the docket are part of docket USCG–2009–0449 and are available online by going to *http://www.regulations.gov,* selecting the Advanced Docket Search option on the right side of the screen, inserting USCG–2009–0414 in the Docket ID box, pressing Enter, and then clicking on the item in the Docket ID column. This material is also available for inspection or copying at the Docket Management Facility (M–30), U.S. Department of Transportation, West Building Ground Floor, Room W12–140, 1200 New Jersey Avenue, SE., Washington, DC 20590, between 9 a.m. and 5 p.m., Monday through Friday, except Federal holidays.

FOR FURTHER INFORMATION CONTACT: If you have questions on this rule, call or e-mail David M. Frank, Bridge Administration Branch, Coast Guard; telephone 504–671–2128, e-mail *David.M.Frank@uscg.mil.* If you have questions on viewing the docket, call Renee V. Wright, Program Manager, Docket Operations, telephone 202–366–9826.

SUPPLEMENTARY INFORMATION: The BNSF Railway Company has requested a temporary deviation from the operating schedule of the BNSF Swing Bridge across the Mermentau River, mile 68.0, in Mermentau, Acadia and Jefferson Davis Parishes, Louisiana. The closure is necessary to allow for repairs to the bridge.

Presently, the bridge opens on signal for the passage of vessels. This deviation will allow the bridge to remain in the closed-to-navigation position from 7 a.m. on Monday, June 29, 2009 until 5 p.m. on Tuesday, June 30, 2009. Navigation on the waterway consists of tugs with tows, fishing vessels and recreational craft. Due to prior experience and coordination with waterway users it has been determined that this closure will not have a significant effect on these vessels.

The vertical clearance of the swing bridge in the closed-to-navigation position is 10.0 feet and unlimited in the open-to-navigation position. No alternate routes are available. As this work is proposed during hurricane season, if any storms are in the Gulf of Mexico, the work may be postponed and rescheduled.

In accordance with 33 CFR 117.35(e), the drawbridge must return to its regular operating schedule immediately at the end of the designated time period. This deviation from the operating regulations is authorized under 33 CFR 117.35.

Dated: May 28, 2009.

David M. Frank,

Bridge Administrator.

[FR Doc. E9–14550 Filed 6–19–09; 8:45 am]

BILLING CODE 4910–15–P

DEPARTMENT OF HOMELAND SECURITY

Coast Guard

33 CFR Part 165

[Docket No. USCG 2009–0408]

Safety Zone; Independence Day Celebration for the City of San Francisco, CA

AGENCY: Coast Guard, DHS.

ACTION: Notice of enforcement of regulation.

SUMMARY: The Coast Guard will enforce the Independence Day Celebration for the City of San Francisco Fireworks safety zone from 11 a.m. through 10 p.m. on July 4, 2009. The fireworks will be fired simultaneously from two separate locations: Location 1 will be held 1,000 feet from Pier 39 in position 37° 48.710′ N and 122° 24.464′ W on July 4, 2009 and Location 2 will be fired from the Municipal Pier in Aquatic park in position 37° 48.611′ N and 122° 25.532′ W on July 4, 2009. This action is necessary to control vessel traffic and to ensure the safety of event participants and spectators. During the enforcement period, unauthorized persons or vessels are prohibited from entering into, transiting through, or anchoring in the safety zone, unless authorized by the Patrol Commander (PATCOM).

DATES: The regulations in 33 CFR 165.1191 will be enforced from 11 a.m. through 10 p.m. on July 4, 2009.

FOR FURTHER INFORMATION CONTACT: If you have questions on this notice, call or e-mail Lieutenant Junior Grade Simone Mausz, U.S. Coast Guard, Waterways Safety Division; telephone 415–399–7442, e-mail *simone.mausz@uscg.mil.*

SUPPLEMENTARY INFORMATION: The Coast Guard will enforce the Independence Day Celebration for the City of San Francisco Fireworks safety zone from 11 a.m. through 10 p.m. on July 4, 2009. The fireworks will be fired simultaneously from two separate locations: Location 1 will be held 1,000 feet from Pier 39 in position 37° 48.710′ N and 122° 24.464′ W on July 4, 2009 and Location 2 will be fired from the Municipal Pier in Aquatic Park in position 37° 48.611′ N and 122° 25.532′ W on July 4, 2009.

For Location 1, during the loading of the fireworks barge, while the barge is being towed to the display location, and until the start of the fireworks display, the safety zone applies to the navigable waters around and under the fireworks barge within a radius of 100 feet. Fifteen minutes before and during the twenty minute fireworks display, the area to which this safety zone applies will increase in size to encompass the navigable waters around and under the fireworks barge within a radius of 1,000 feet. Loading of the pyrotechnics onto the fireworks barge is scheduled to commence at 11 a.m. on July 4, 2009, and will take place at Pier 50 in San Francisco. Towing of the barge from Pier 50 to the display location is scheduled to take place on July 4, 2009 at 8 p.m. During the fireworks display, scheduled to start at approximately 9:30 p.m., the fireworks barge will be located approximately 1,000 feet off of Pier 39 in position 37° 48.710′ N, 122° 24.464′ W (NAD 83). This safety zone will be in

effect from 11 a.m. to 10 p.m. on July 4, 2009.

For Location 2, the fireworks will be launched from the Municipal Pier in position 37° 48.611′ N, 122° 25.532′ W (NAD 83). The safety zone will apply to the navigable waters around and under the fireworks site within a radius of 500 feet. The fireworks display is scheduled to launch at 9:30 p.m. and will last approximately twenty minutes. This safety zone will be in effect from 9 p.m. to 10 p.m. on July 4, 2009.

Under the provisions of 33 CFR 165.1191, unauthorized persons or vessels are prohibited from entering into, transiting through, or anchoring in the safety zone during all applicable effective dates and times, unless authorized to do so by the PATCOM. Additionally, each person who receives notice of a lawful order or direction issued by an official patrol vessel shall obey the order of direction. The PATCOM is empowered to forbid entry into and control the regulated area. The PATCOM shall be designated by the Commander, Coast Guard Sector San Francisco. The PATCOM may, upon request, allow the transit of commercial vessels through regulated areas when it is safe to do so.

This notice is issued under authority of 33 CFR 165.1191 and 5 U.S.C. 552(a). In addition to this notice in the **Federal Register,** the Coast Guard will provide the maritime community with extensive advance notification of this enforcement period via the Local Notice to Mariners.

If the Captain of the Port determines that the regulated area need not be enforced for the full duration stated in this notice, he or she may use a Broadcast Notice to Mariners to grant general permission to enter the regulated area.

Dated: June 8, 2009.

P.M. Gugg,

Captain, U.S. Coast Guard, Captain of the Port San Francisco.

[FR Doc. E9–14585 Filed 6–19–09; 8:45 am]

BILLING CODE 4910–15–P

DEPARTMENT OF HOMELAND SECURITY

Coast Guard

33 CFR Part 165

[Docket No. USCG–2009–0512]

RIN 1625–AA00

Safety Zone: F/V PATRIOT, Massachusetts Bay, MA

AGENCY: Coast Guard, DHS.

ACTION: Temporary final rule.

SUMMARY: The Coast Guard is establishing a temporary safety zone surrounding the sunken fishing vessel PATRIOT located approximately 17 miles northeast of Scituate, Massachusetts, in Massachusetts Bay. The safety zone is in effect while the vessel remains on the sea floor and subsequently re-floated during salvage operations. The safety zone will then move with the vessel until the F/V PATRIOT is safely moored. This action is necessary to ensure that vessels are not endangered by conducting dredging, diving, anchoring, fishing or other activities while the F/V PATRIOT sits on the sea floor. This action is also necessary to assist in providing a safe work environment for those conducting the salvage operation. This temporary rulemaking is needed to protect the environment, the commercial fishing industry, salvage operators and the general public from potential hazards associated with the sunken vessel and from potential hazards associated with the salvage of the vessel.

DATES: *Effective Dates:* This rule is effective from midnight June 11, 2009, through midnight July 25, 2009.

ADDRESSES: Documents indicated in this preamble as being available in the docket are part of docket USCG–2009–0512 and are available online by going to *http://www.regulations.gov,* selecting the Advanced Docket Search option on the right side of the screen, inserting USCG–2009–0512 in the Docket ID box, pressing Enter, and then clicking on the item in the Docket ID column. They are also available for inspection or copying at the following location: The Docket Management Facility (M–30), U.S. Department of Transportation, West Building Ground Floor, Room W12–140, 1200 New Jersey Avenue, SE., Washington, DC 20590, between 9 a.m. and 5 p.m., Monday through Friday, except Federal holidays.

FOR FURTHER INFORMATION CONTACT: If you have questions on this temporary rule, call or e-mail Chief Eldridge McFadden, U.S. Coast Guard Sector Boston, Waterways Management Division; telephone 617–223–5160, e-mail *Eldridge.C.McFadden@uscg.mil.* If you have questions on viewing the docket, call Renee V. Wright, Program Manager, Docket Operations, telephone 202–366–9826.

SUPPLEMENTARY INFORMATION:

Regulatory Information

The Coast Guard is issuing this temporary final rule without prior notice and opportunity to comment pursuant to authority under section 4(a) of the Administrative Procedure Act (APA) (5 U.S.C. 553(b)). This provision authorizes an agency to issue a rule without prior notice and opportunity to comment when the agency for good cause finds that those procedures are ''impracticable, unnecessary, or contrary to the public interest.'' Under 5 U.S.C. 553(b)(B), the Coast Guard finds that good cause exists for not publishing a notice of proposed rulemaking (NPRM) with respect to this rule because initial immediate action was needed to protect the public from the hazards posed by an unknown underwater object located in Massachusetts Bay. This object was later identified as the F/V PATRIOT, located in approximately 95 feet of water 17 miles northeast of Scituate, Massachusetts. This rule extends the existing safety zone set to expire on June 10, 2009, to ensure, to the extent practicable, the immediate, continued protections for the environment, the commercial fishing industry, salvage operators and the general public from the potential hazards associated with the salvage of the F/V PATRIOT. The loss of the F/V PATRIOT created significant interest in the local fishing community and considerable media interest. Salvage of the F/V PATRIOT has the potential of attracting a variety of on-lookers who may be searching for unanswered questions or are just curious; operations also have the potential of generating considerable media interest. An uncontrolled gathering of vessels surrounding the location of salvage operations has the potential of creating an unsafe work environment during salvage operations. It would be contrary to the public interest for the existing safety zone to lapse on the eve of such operations.

For the same reason, under 5 U.S.C. 553(d)(3), the Coast Guard finds that good cause exists for making this rule effective less than 30 days after publication in the **Federal Register.**

Background and Purpose

On January 3, 2009, the F/V PATRIOT, a 54-foot steel-hull boat, sank with the loss of two crewmembers onboard. The vessel was reported to have an estimated 5,000 gallons of fuel onboard. There were no survivors and the exact position of the vessel was not immediately known. On January 8, 2009, the Coast Guard established a temporary safety zone around a reported underwater object believed to be the F/V PATRIOT, located in Massachusetts Bay approximately 17 miles northeast of Scituate, Massachusetts, in position 42°24′27.34″ N, 70°27′17.23″ W.

On January 23, 2009, underwater exploratory operations with photographic equipment confirmed that

the object was the F/V PATRIOT. The owners of the vessel intend to conduct dive and salvage operations on the vessel. The Coast Guard is implementing this safety zone to surround the F/V PATRIOT and the salvage equipment transporting it from its current resting place to its future berth.

This regulation effectively extends the safety zone set to expire on June 10, 2009.

Discussion of Rule

This regulation creates a temporary safety zone around the F/V PATRIOT currently located in Massachusetts Bay, Massachusetts, 17 miles northeast of Scituate, Massachusetts. The safety zone will protect the vessel until it is salvaged and subsequently transported to the shore, at which time the safety zone will no longer be enforced. This regulation is necessary to allow the owners of the F/V PATRIOT to safely conduct salvage operations and transport the vessel to shore. This safety zone is in place to protect the public from the hazards associated with a salvage operation. The zone extends for 500 yards, in all directions, from the F/V PATRIOT, currently in approximate position 42°24′27.34″ N, 70°27′17.23″ W. Once F/V PATRIOT has been re-floated, the safety zone shall remain in effect, reduce in size to 50 yards and move with the vessel until the vessel is safely moored.

This action is intended to prohibit vessels and persons from entering, transiting, anchoring, diving, dredging, dumping, fishing, trawling, laying cable, or conducting salvage operations in this zone except as authorized by the Coast Guard Captain of the Port Boston, Massachusetts. Public notifications about this safety zone will be made through broadcast and local notice to mariners. Marine traffic may transit safely in surrounding areas, but are restricted from entering the area delineated above.

The Captain of the Port anticipates minimal negative impact on vessel traffic due to the limited area and duration covered by this safety zone.

Regulatory Analyses

We developed this rule after considering numerous statutes and executive orders related to rulemaking. Below we summarize our analyses based on 13 of these statutes or executive orders.

Regulatory Planning and Review

This rule is not a significant regulatory action under section 3(f) of Executive Order 12866, Regulatory Planning and Review, and does not require an assessment of potential costs and benefits under section 6(a)(3) of that Order. The Office of Management and Budget has not reviewed it under that Order.

Small Entities

Under the Regulatory Flexibility Act (5 U.S.C. 601–612), we have considered whether this rule would have a significant economic impact on a substantial number of small entities. The term ''small entities'' comprises small businesses, not-for-profit organizations that are independently owned and operated and are not dominant in their fields, and governmental jurisdictions with populations of less than 50,000.

The Coast Guard certifies under 5 U.S.C. 605(b) that this rule will not have a significant economic impact on a substantial number of small entities.

This rule may affect the following entities, some of which may be small entities: The owners or operators of vessels intending to transit, anchor, or fish in a portion of the waterway covered by the safety zone. This rule will not have a significant impact on a substantial number of small entities for the following reasons: The area this rule is affecting is very small and there is plenty of water in the area for vessels to transit around.

Assistance for Small Entities

Under section 213(a) of the Small Business Regulatory Enforcement Fairness Act of 1996 (Pub. L. 104–121), we offer to assist small entities in understanding the rule so that they can better evaluate its effects on them and participate in the rulemaking process.

Small businesses may send comments on the actions of Federal employees who enforce, or otherwise determine compliance with, Federal regulations to the Small Business and Agriculture Regulatory Enforcement Ombudsman and the Regional Small Business Regulatory Fairness Boards. The Ombudsman evaluates these actions annually and rates each agency's responsiveness to small business. If you wish to comment on actions by employees of the Coast Guard, call 1–888–REG–FAIR (1–888–734–3247). The Coast Guard will not retaliate against small entities that question or complain about this rule or any policy or action of the Coast Guard.

Collection of Information

This rule calls for no new collection of information under the Paperwork Reduction Act of 1995 (44 U.S.C. 3501–3520).

Federalism

A rule has implications for federalism under Executive Order 13132, Federalism, if it has a substantial direct effect on State or local governments and would either preempt State law or impose a substantial direct cost of compliance on them. We have analyzed this rule under that Order and have determined that it does not have implications for federalism.

Unfunded Mandates Reform Act

The Unfunded Mandates Reform Act of 1995 (2 U.S.C. 1531–1538) requires Federal agencies to assess the effects of their discretionary regulatory actions. In particular, the Act addresses actions that may result in the expenditure by a State, local, or tribal government, in the aggregate, or by the private sector of $100,000,000 or more in any one year. Though this rule will not result in such an expenditure, we do discuss the effects of this rule elsewhere in this preamble.

Taking of Private Property

This rule will not effect a taking of private property or otherwise have taking implications under Executive Order 12630, Governmental Actions and Interference with Constitutionally Protected Property Rights.

Civil Justice Reform

This rule meets applicable standards in sections 3(a) and 3(b)(2) of Executive Order 12988, Civil Justice Reform, to minimize litigation, eliminate ambiguity, and reduce burden.

Protection of Children

We have analyzed this rule under Executive Order 13045, Protection of Children from Environmental Health Risks and Safety Risks. This rule is not an economically significant rule and does not create an environmental risk to health or risk to safety that may disproportionately affect children.

Indian Tribal Governments

This rule does not have tribal implications under Executive Order 13175, Consultation and Coordination with Indian Tribal Governments, because it does not have a substantial direct effect on one or more Indian tribes, on the relationship between the Federal Government and Indian tribes, or on the distribution of power and responsibilities between the Federal Government and Indian tribes.

Energy Effects

We have analyzed this rule under Executive Order 13211, Actions Concerning Regulations That

Significantly Affect Energy Supply, Distribution, or Use. We have determined that it is not a ''significant energy action'' under that order because it is not a ''significant regulatory action'' under Executive Order 12866 and is not likely to have a significant adverse effect on the supply, distribution, or use of energy. The Administrator of the Office of Information and Regulatory Affairs has not designated it as a significant energy action. Therefore, it does not require a Statement of Energy Effects under Executive Order 13211.

Technical Standards

The National Technology Transfer and Advancement Act (NTTAA) (15 U.S.C. 272 note) directs agencies to use voluntary consensus standards in their regulatory activities unless the agency provides Congress, through the Office of Management and Budget, with an explanation of why using these standards would be inconsistent with applicable law or otherwise impractical. Voluntary consensus standards are technical standards (*e.g.,* specifications of materials, performance, design, or operation; test methods; sampling procedures; and related management systems practices) that are developed or adopted by voluntary consensus standards bodies.

This rule does not use technical standards. Therefore, we did not consider the use of voluntary consensus standards.

Environment

We have analyzed this rule under Department of Homeland Security Management Directive 023–01 and Commandant Instruction M16475.lD, which guide the Coast Guard in complying with the National Environmental Policy Act of 1969 (NEPA) (42 U.S.C. 4321–4370f), and have concluded this action is one of a category of actions which do not individually or cumulatively have a significant effect on the human environment. This rule is categorically excluded, under figure 2–1, paragraph (34)(g.), of the Instruction. This rule involves a temporary safety zone which may last longer than a week and is not an emergency situation. An environmental analysis checklist and a categorical exclusion determination will be available in the docket where indicated under **ADDRESSES**.

List of Subjects in 33 CFR Part 165

Harbors, Marine safety, Navigation (water), Reporting and recordkeeping requirements, Security measures, Waterways.

■ For the reasons discussed in the preamble, the Coast Guard amends 33 CFR part 165 as follows:

PART 165—REGULATED NAVIGATION AREAS AND LIMITED ACCESS AREAS

■ 1. The authority citation for part 165 continues to read as follows:

Authority: 33 U.S.C. 1226, 1231; 46 U.S.C. Chapter 701; 3306, 3703; 50 U.S.C. 191, 195; 33 CFR 1.05–1, 6.04–1, 6.04–6, and 160.5; Public Law 107–295, 116 Stat. 2064; Department of Homeland Security Delegation No. 0170.1.

■ 2. Add temporary § 165.T01–0512, to read as follows:

§ 165.T01–0512 Safety Zone: F/V PATRIOT, Massachusetts Bay, MA.

(a) *Location.* The following area is a safety zone: All navigable waters, from surface to bottom, of Massachusetts Bay within a 500-yard radius of the F/V PATRIOT while located in its currently approximate position of 42°24′27″ N, 070°27′17″ W. When the vessel is re-floated during salvage operations, the safety zone will reduce to a 50-yard radius and move with the F/V PATRIOT until safely moored.

(b) *Definitions.* The following definition applies to this section: Designated representative means any commissioned, warrant, and petty officers of the Coast Guard on board Coast Guard, Coast Guard Auxiliary, and local, state, and federal law enforcement vessels who have been authorized to act on the behalf of the Captain of the Port Boston.

(c) *Regulations.* (1) The general regulations contained in 33 CFR 165.23 apply.

(2) In accordance with the general regulations in § 165.23 of this part, all vessels and persons are prohibited from entering the safety zone without permission from the Captain of the Port Boston. In addition, all vessels and persons are prohibited from anchoring, diving, dredging, dumping, fishing, trawling, laying cable, or conducting salvage operations in this zone except as authorized by the Coast Guard Captain of the Port Boston.

(3) All persons and vessels shall comply with the Coast Guard Captain of the Port Boston or designated representative.

(4) Upon being hailed by a U.S. Coast Guard vessel or designated representative by siren, radio, flashing light or other means, the operator of the vessel shall proceed as directed.

(5) Persons desiring to enter the safety zone may request permission from the Captain of the Port Boston via VHF Channel 16 or via telephone at (617) 223–3201.

(d) Enforcement Period. This rule will be enforced from midnight June 11, 2009, until midnight July 25, 2009.

Dated: June 9, 2009.

John N. Healey,

Captain, U.S. Coast Guard, Captain of the Port Boston.

[FR Doc. E9–14586 Filed 6–19–09; 8:45 am]

BILLING CODE 4910–15–P

DEPARTMENT OF HOMELAND SECURITY

Coast Guard

33 CFR Part 165

[Docket No. USCG–2009–0455]

RIN 1625–AA00

Safety Zone; Naval Training, San Clemente Island, CA

AGENCY: Coast Guard, DHS.

ACTION: Temporary final rule.

SUMMARY: The Coast Guard is establishing a safety zone on the navigable waters of the Pacific Ocean at the north end of San Clemente Island in support of Naval Live Fire Training. This safety zone is necessary to ensure non-authorized personnel and vessels remain safe by keeping clear of the hazardous area during the training activity. Persons and vessels are prohibited from entering into, transiting through, or anchoring within this safety zone unless authorized by the Captain of the Port (COTP) San Diego or his designated representative.

DATES: This rule is effective from June 6, 2009 through July 31, 2009.

ADDRESSES: Documents indicated in this preamble as being available in the docket are part of docket USCG–2009–0455 and are available online by going to *http://www.regulations.gov,* selecting the Advanced Docket Search option on the right side of the screen, inserting USCG–2009–0455 in the Docket ID box, pressing Enter, and then clicking on the item in the Docket ID column. They are also available for inspection or copying at the Docket Management Facility (M–30), U.S. Department of Transportation, West Building Ground Floor, Room W12–140, 1200 New Jersey Avenue, SE., Washington, DC 20590, between 9 a.m. and 5 p.m., Monday through Friday, except Federal holidays.

FOR FURTHER INFORMATION CONTACT: If you have questions on this temporary rule, call or e-mail Petty Officer Kristen Beer, Waterways Management, U.S. Coast Guard Sector San Diego, U.S. Coast Guard; telephone 619–278–7262,

e-mail *Kristen.A.Beer@uscg.mil.* If you have questions on viewing the docket, call Renee V. Wright, Program Manager, Docket Operations, telephone 202–366–9826.

SUPPLEMENTARY INFORMATION:

Regulatory Information

The Coast Guard is issuing this temporary final rule without prior notice and opportunity to comment pursuant to authority under section 4(a) of the Administrative Procedure Act (APA) (5 U.S.C. 553(b)). This provision authorizes an agency to issue a rule without prior notice and opportunity to comment when the agency for good cause finds that those procedures are ''impracticable, unnecessary, or contrary to the public interest.'' Under 5 U.S.C. 553(b)(B), the Coast Guard finds that good cause exists for not publishing a notice of proposed rulemaking (NPRM) with respect to this rule because immediate action is necessary to ensure the safety of commercial and recreational vessels in the vicinity of any live fire training on the dates and times this rule will be in effect and delay would be contrary to the public interest.

For the same reasons, the Coast Guard also finds that good cause exists under 5 U.S.C. 553(d)(3) for making this rule effective less than 30 days after publication in the **Federal Register.** Any delay in the effective date of this rule would expose mariners to the dangers posed by the training.

Background and Purpose

U.S. Naval forces will be conducting intermittent training involving live fire exercises throughout June and July 2009. This safety zone is necessary to ensure non-authorized personnel and vessels remain safe by keeping clear of the hazardous area during the training activity.

Discussion of Rule

The Coast Guard is establishing a safety zone that will be enforced from June 6, 2009 through July 31, 2009. The limits of the safety zone will be the navigable waters of the Pacific Ocean at the north end of San Clemente Island bounded by lines connecting the following coordinates: Beginning at 33°01.09′ N, 118°36.34′ W; thence to 32°59.95′ N, 118°39.77′ W; thence running parallel to the shoreline at a distance of approximately 3 NM to 33°02.81′ N, 118°30.65′ W; thence to 33°01.29′ N, 118°33.88′ W; thence along the shoreline returning to 33°01.09′ N, 118°36.34′ W (NAD 83).

This safety zone is necessary to ensure non-authorized personnel and vessels remain safe by keeping clear of the hazardous area during the training activities. Persons and vessels are prohibited from entering into, transiting through, or anchoring within this safety zone unless authorized by the Captain of the Port, or his designated representative.

Regulatory Analyses

We developed this rule after considering numerous statutes and executive orders related to rulemaking. Below we summarize our analyses based on 13 of these statutes or executive orders.

Regulatory Planning and Review

This rule is not a significant regulatory action under section 3(f) of Executive Order 12866, Regulatory Planning and Review, and does not require an assessment of potential costs and benefits under section 6(a)(3) of that Order. The Office of Management and Budget has not reviewed it under that Order.

We expect the economic impact of this rule to be so minimal that a full Regulatory Evaluation is unnecessary. This determination is based on the size and location of the safety zone. Commercial and recreational vessels will not be allowed to transit through the designated safety zone during specified times of training.

Small Entities

Under the Regulatory Flexibility Act (5 U.S.C. 601–612), we have considered whether this rule would have a significant economic impact on a substantial number of small entities. The term ''small entities'' comprises small businesses, not-for-profit organizations that are independently owned and operated and are not dominant in their fields, and governmental jurisdictions with populations of less than 50,000.

The Coast Guard certifies under 5 U.S.C. 605(b) that this rule will not have a significant economic impact on a substantial number of small entities.

This rule will affect the following entities, some of which may be small entities: The owners or operators of vessels intending to transit or anchor in a portion of the Pacific Ocean on the north end of San Clemente Island from June 6, 2009 until July 31, 2009.

This safety zone will not have a significant economic impact on a substantial number of small entities for the following reasons: This rule will be enforced only during naval training exercises. Vessel traffic can pass safely around the zone. Traffic will be allowed to pass through the zone with the permission of the U.S. Navy or U.S. Coast Guard. Before the effective period, the Coast Guard will issue broadcast notice to mariners (BNM) alerts.

Assistance for Small Entities

Under section 213(a) of the Small Business Regulatory Enforcement Fairness Act of 1996 (Pub. L. 104–121), we offer to assist small entities in understanding the rule so that they can better evaluate its effects on them and participate in the rulemaking process.

Small businesses may send comments on the actions of Federal employees who enforce, or otherwise determine compliance with, Federal regulations to the Small Business and Agriculture Regulatory Enforcement Ombudsman and the Regional Small Business Regulatory Fairness Boards. The Ombudsman evaluates these actions annually and rates each agency's responsiveness to small business. If you wish to comment on actions by employees of the Coast Guard, call 1–888–REG–FAIR (1–888–734–3247). The Coast Guard will not retaliate against small entities that question or complain about this rule or any policy or action of the Coast Guard.

Collection of Information

This rule calls for no new collection of information under the Paperwork Reduction Act of 1995 (44 U.S.C. 3501–3520).

Federalism

A rule has implications for Federalism under Executive Order 13132, Federalism, if it has a substantial direct effect on State or local governments and would either preempt State law or impose a substantial direct cost of compliance on them. We have analyzed this rule under that Order and have determined that it does not have implications for Federalism.

Unfunded Mandates Reform Act

The Unfunded Mandates Reform Act of 1995 (2 U.S.C. 1531–1538) requires Federal agencies to assess the effects of their discretionary regulatory actions. In particular, the Act addresses actions that may result in the expenditure by a State, local, or tribal government, in the aggregate, or by the private sector of $100,000,000 or more in any one year. Though this rule will not result in such an expenditure, we do discuss the effects of this rule elsewhere in this preamble.

Taking of Private Property

This rule will not effect a taking of private property or otherwise have taking implications under Executive

Order 12630, Governmental Actions and Interference with Constitutionally Protected Property Rights.

Civil Justice Reform

This rule meets applicable standards in sections 3(a) and 3(b)(2) of Executive Order 12988, Civil Justice Reform, to minimize litigation, eliminate ambiguity, and reduce burden.

Protection of Children

We have analyzed this rule under Executive Order 13045, Protection of Children from Environmental Health Risks and Safety Risks. This rule is not an economically significant rule and does not create an environmental risk to health or risk to safety that may disproportionately affect children.

Indian Tribal Governments

This rule does not have tribal implications under Executive Order 13175, Consultation and Coordination with Indian Tribal Governments, because it does not have a substantial direct effect on one or more Indian tribes, on the relationship between the Federal Government and Indian tribes, or on the distribution of power and responsibilities between the Federal Government and Indian tribes.

Energy Effects

We have analyzed this rule under Executive Order 13211, Actions Concerning Regulations That Significantly Affect Energy Supply, Distribution, or Use. We have determined that it is not a ''significant energy action'' under that order because it is not a ''significant regulatory action'' under Executive Order 12866 and is not likely to have a significant adverse effect on the supply, distribution, or use of energy. The Administrator of the Office of Information and Regulatory Affairs has not designated it as a significant energy action. Therefore, it does not require a Statement of Energy Effects under Executive Order 13211.

Technical Standards

The National Technology Transfer and Advancement Act (NTTAA) (15 U.S.C. 272 note) directs agencies to use voluntary consensus standards in their regulatory activities unless the agency provides Congress, through the Office of Management and Budget, with an explanation of why using these standards would be inconsistent with applicable law or otherwise impractical. Voluntary consensus standards are technical standards (*e.g.,* specifications of materials, performance, design, or operation; test methods; sampling procedures; and related management systems practices) that are developed or adopted by voluntary consensus standards bodies.

This rule does not use technical standards. Therefore, we did not consider the use of voluntary consensus standards.

Environment

We have analyzed this rule under Department of Homeland Security Management Directive 023–01 and Commandant Instruction M16475.lD, which guide the Coast Guard in complying with the National Environmental Policy Act of 1969 (NEPA) (42 U.S.C. 4321–4370f), and have concluded this action is one of a category of actions which do not individually or cumulatively have a significant effect on the human environment. This rule is categorically excluded, under figure 2–1, paragraph (34)(g), of the Instruction because this rule involves the establishment of a safety zone.

An environmental analysis checklist and a categorical exclusion determination are available in the docket where indicated under **ADDRESSES**.

List of Subjects in 33 CFR Part 165

Harbors, Marine safety, Navigation (water), Reporting and recordkeeping requirements, Security measures, Waterways.

■ For the reasons discussed in the preamble, the Coast Guard amends 33 CFR part 165 as follows:

PART 165—REGULATED NAVIGATION AREAS AND LIMITED ACCESS AREAS

■ 1. The authority citation for part 165 continues to read as follows:

Authority: 33 U.S.C. 1226, 1231; 46 U.S.C. Chapter 701, 3306, 3703; 50 U.S.C. 191, 195; 33 CFR 1.05–1, 6.04–1, 6.04–6, and 160.5; Pub. L. 107–295; 116 Stat. 2064; Department of Homeland Security Delegation No. 0170.1.

■ 2. Add a new temporary section § 165.T11–200 to read as follows:

§ 165.T11–200 Safety zone; Naval Training, San Clemente Island, CA.

(a) *Location.* The following area is a safety zone: All navigable waters of the Pacific Ocean, from surface to bottom, at the north end of San Clemente Island bounded by lines connecting the following points: Beginning at 33°01.09′ N, 118°36.34′ W; thence to 32°59.95′ N, 118°39.77′ W; thence running parallel to the shoreline at a distance of approximately 3 NM to 33°02.81′ N, 118°30.65′ W; thence to 33°01.29′ N, 118°33.88′ W; thence along the shoreline returning to 33°01.09′ N, 118°36.34′ W. These coordinates are based on NAD 83.

(b) *Effective Period.* This section is effective from June 6, 2009 through July 31, 2009. If naval training exercises are concluded prior to the scheduled termination of the effective period, the COTP will cease enforcement of this safety zone and will announce that fact via Broadcast Notice to Mariners.

(c) *Definitions.* The following definitions apply to this section: *Designated representative,* means any Commissioned, Warrant, or Petty Officers of the Coast Guard, or Coast Guard Auxiliary, and local, state, and federal law enforcement officers who have been authorized to act on the behalf of the COTP; *non-authorized personnel and vessels,* means any civilian boats, fishermen, divers, and swimmers.

(d) *Regulations.* (1) Under the general regulations in § 165.23, entry into, transit through or anchoring within this safety zone is prohibited unless authorized by the COTP San Diego or his designated representative.

(2) Non-authorized personnel and vessels requesting permission to transit through the safety zone may request authorization to do so from the COTP San Diego or his designated representative. They may be contacted on VHF–FM Channel 16, or at telephone number (619) 278–7033.

(3) Naval units involved in the exercise are allowed within the safety zone.

(4) All persons and vessels shall comply with the instructions of the Coast Guard COTP or his designated representative.

(5) Upon being hailed by U.S. Coast Guard or other official personnel by siren, radio, flashing light, or other means, the operator of a vessel shall proceed as directed.

(6) The Coast Guard may be assisted by other Federal, State, or local agencies including the U.S. Navy.

Dated: June 4, 2009.

T.H. Farris,

Captain, U.S. Coast Guard, Captain of the Port San Diego.

[FR Doc. E9–14557 Filed 6–19–09; 8:45 am]

BILLING CODE 4910–15–P

DEPARTMENT OF HOMELAND SECURITY

Coast Guard

33 CFR Part 165

[Docket No. USCG–2009–0483]

RIN 1625–AA00

Safety Zone; Target Fireworks, Detroit River, Detroit, MI

AGENCY: Coast Guard, DHS.

ACTION: Temporary final rule.

SUMMARY: The Coast Guard is establishing a temporary safety zone in the Captain of the Port Detroit Zone on the Detroit River, Detroit, Michigan. This Zone is intended to restrict vessels from portions of the Detroit River during the Target Fireworks. This temporary safety zone is necessary to protect spectators and vessels from the hazards associated with fireworks displays.

DATES: This rule is effective from 7 a.m., June 20, 2009 until 12:15 a.m., June 26, 2009.

ADDRESSES: Documents indicated in this preamble as being available in the docket are part of docket USCG–2009–0483 and are available online by going to *http://www.regulations.gov,* selecting the Advanced Docket Search option on the right side of the screen, inserting USCG–2009–0483 in the Docket ID box, pressing Enter, and then clicking on the item in the Docket ID column. They are also available for inspection or copying at the following location: The Docket Management Facility (M–30), U.S. Department of Transportation, West Building Ground Floor, Room W12–140, 1200 New Jersey Avenue, SE., Washington, DC 20590, between 9 a.m. and 5 p.m., Monday through Friday, except Federal holidays.

FOR FURTHER INFORMATION CONTACT: If you have questions on this temporary rule, call or e-mail CDR Joseph Snowden, Prevention Department, Sector Detroit, Coast Guard; telephone (313) 568–9508, e-mail *Joseph.H.Snowden@uscg.mil.* If you have questions on viewing the docket, call Renee V. Wright, Program Manager, Docket Operations, telephone 202–366–9826.

SUPPLEMENTARY INFORMATION:

Regulatory Information

The Coast Guard is issuing this temporary final rule without prior notice and opportunity to comment pursuant to authority under section 4(a) of the Administrative Procedure Act (APA) (5 U.S.C. 553(b)). This provision authorizes an agency to issue a rule without prior notice and opportunity to comment when the agency for good cause finds that those procedures are ''impracticable, unnecessary, or contrary to the public interest.'' Under 5 U.S.C. 553(b)(B), the Coast Guard finds that good cause exists for not publishing a notice of proposed rulemaking (NPRM) with respect to this rule because the permit application was not received in time to publish an NPRM followed by a final rule before the effective date and because immediate action is necessary to protect the safety of spectators and vessels.

Under 5 U.S.C. 553(d)(3), the Coast Guard finds that good cause exists for making this rule effective less than 30 days after publication in the **Federal Register.** Delaying this rule would be contrary to the public interest of ensuring the safety of spectators and vessels during this event, and immediate action is necessary to prevent possible loss of life and property. The Coast Guard has not received any complaints or negative comments previously with regard to events of this type and duration.

Background and Purpose

This temporary safety zone is necessary to ensure the safety of vessels and spectators from hazards associated with a fireworks display. Such hazards include obstructions to the waterway that may cause marine casualties and the explosive danger of fireworks and debris falling into the water that may cause death or serious bodily harm. Establishing a safety zone to control vessel movement around the location of the launch platform will help ensure the safety of persons and property at these events and help minimize the associated risks.

Discussion of Rule

A temporary safety zone is necessary to ensure the safety of spectators and vessels during the setup, loading, and launching of the Target Fireworks Display. The fireworks display will occur between 10 p.m. and 10:45 p.m., June 24, 2009. In the event of inclement weather, the fireworks display will occur between 10 p.m. and 10:45 p.m., June 25, 2009.

Three temporary safety zone areas will be in effect at different periods throughout the enforcement of this rule. The first safety zone area will encompass all waters of the Detroit River bounded by the arc of a circle with a 900-foot radius with its center in approximate position 42°19′23″ N, 083°04′34″ W from 7 a.m. to 9 p.m. on June 20, 2009, from 6 a.m. to 9 p.m. June 21, 2009, from 6 a.m. to 9 p.m. June 22, 2009, from 6 a.m. to 9 p.m. June 23, 2009 and from 6 a.m. to 5 p.m. on June 24, 2009, and in the event of inclement weather, from 6 a.m. to 5 p.m. on June 25, 2009.

The second safety zone area will encompass a portion of the Detroit River bounded on the South by the International Boundary line, on the West by 83°03′30″ W, on the North by the City of Detroit shoreline and on the East by 083°01′15″ W from 5 p.m. on June 24, 2009 through 12:15 a.m. on June 25, 2009, and in the event of inclement weather, from 5 p.m. on June 25 to 12:15 a.m. on June 26, 2009.

The third safety zone area will restrict vessels 65 feet in length or greater from navigation or anchorage within a portion of the Detroit River bounded on the South by the International Boundary line, on the West by the Ambassador Bridge, on the North by the City of Detroit shoreline, and on the East by a line near the downstream end of Belle Isle starting at the U.S. shoreline at position 42°20′17″ N; 083°00′39″ W, and extending to the International Boundary line at position 42°19′53″ N; 083°00′15″ W from 8 p.m. on June 24, 2009 through 12:15 a.m. on June 25, 2009, and in the event of inclement weather, from 8 p.m. on June 25 to 12:15 a.m. on June 26, 2009.

In the event of inclement weather, the date of the fireworks display will be June 25, 2009. All geographic coordinates are North American Datum of 1983 (NAD 83).

All persons and vessels shall comply with the instructions of the Coast Guard Captain of the Port or the designated on scene patrol personnel. Entry into, transiting, or anchoring within the safety zone is prohibited unless authorized by the Captain of the Port Detroit or his designated on scene representative. The Captain of the Port or his designated on scene representative may be contacted via VHF Channel 16.

Regulatory Analyses

We developed this rule after considering numerous statutes and executive orders related to rulemaking. Below we summarize our analyses based on 13 of these statutes or executive orders.

Regulatory Planning and Review

This rule is not a significant regulatory action under section 3(f) of Executive Order 12866, Regulatory Planning and Review, and does not require an assessment of potential costs and benefits under section 6(a)(3) of that Order. The Office of Management and Budget has not reviewed it under that

Order. It is not ''significant'' under the regulatory policies and procedures of the Department of Homeland Security (DHS).

This determination is based on the minimal time that vessels will be restricted from the zone and the zone is an area where the Coast Guard expects insignificant adverse impact to mariners from the zone's activation.

Small Entities

Under the Regulatory Flexibility Act (5 U.S.C. 601–612), we have considered whether this rule would have a significant economic impact on a substantial number of small entities. The term ''small entities'' comprises small businesses, not-for-profit organizations that are independently owned and operated and are not dominant in their fields, and governmental jurisdictions with populations of less than 50,000.

The Coast Guard certifies under 5 U.S.C. 605(b) that this rule will not have a significant economic impact on a substantial number of small entities.

This rule will affect the following entities, some of which may be small entities: The owners and operators of vessels intending to transit or anchor in a portion of the Detroit River near Detroit, MI between 7 a.m. on June 20, 2009 and 12 a.m. on June 25, 2009.

This safety zone will not have a significant economic impact on a substantial number of small entities for the following reasons: This rule will only be in effect for a few days for one event, and throughout most of the enforcement period, navigation around the safety zone will be available. In the event that this temporary safety zone affects shipping, commercial vessels may request permission from the Captain of the Port Detroit to transit through the safety zone. The Coast Guard will give notice to the public via a Broadcast Notice to Mariners that the regulation is in effect.

Assistance for Small Entities

Under section 213(a) of the Small Business Regulatory Enforcement Fairness Act of 1996 (Pub. L. 104–121), we offer to assist small entities in understanding the rule so that they can better evaluate its effects on them and participate in the rulemaking process.

Small businesses may send comments on the actions of Federal employees who enforce, or otherwise determine compliance with, Federal regulations to the Small Business and Agriculture Regulatory Enforcement Ombudsman and the Regional Small Business Regulatory Fairness Boards. The Ombudsman evaluates these actions annually and rates each agency's responsiveness to small business. If you wish to comment on actions by employees of the Coast Guard, call 1–888–REG–FAIR (1–888–734–3247). The Coast Guard will not retaliate against small entities that question or complain about this rule or any policy or action of the Coast Guard.

Collection of Information

This rule calls for no new collection of information under the Paperwork Reduction Act of 1995 (44 U.S.C. 3501–3520).

Federalism

A rule has implications for Federalism under Executive Order 13132, Federalism, if it has a substantial direct effect on State or local governments and would either preempt State law or impose a substantial direct cost of compliance on them. We have analyzed this rule under that Order and have determined that it does not have implications for Federalism.

Unfunded Mandates Reform Act

The Unfunded Mandates Reform Act of 1995 (2 U.S.C. 1531–1538) requires Federal agencies to assess the effects of their discretionary regulatory actions. In particular, the Act addresses actions that may result in the expenditure by a State, local, or tribal government, in the aggregate, or by the private sector of $100,000,000 or more in any one year. Though this rule will not result in such an expenditure, we do discuss the effects of this rule elsewhere in this preamble.

Taking of Private Property

This rule will not effect a taking of private property or otherwise have taking implications under Executive Order 12630, Governmental Actions and Interference with Constitutionally Protected Property Rights.

Civil Justice Reform

This rule meets applicable standards in sections 3(a) and 3(b)(2) of Executive Order 12988, Civil Justice Reform, to minimize litigation, eliminate ambiguity, and reduce burden.

Protection of Children

We have analyzed this rule under Executive Order 13045, Protection of Children From Environmental Health Risks and Safety Risks. This rule is not an economically significant rule and does not create an environmental risk to health or risk to safety that may disproportionately affect children.

Indian Tribal Governments

This rule does not have tribal implications under Executive Order 13175, Consultation and Coordination With Indian Tribal Governments, because it does not have a substantial direct effect on one or more Indian tribes, on the relationship between the Federal Government and Indian tribes, or on the distribution of power and responsibilities between the Federal Government and Indian tribes.

Energy Effects

We have analyzed this rule under Executive Order 13211, Actions Concerning Regulations That Significantly Affect Energy Supply, Distribution, or Use. We have determined that it is not a ''significant energy action'' under that order because it is not a ''significant regulatory action'' under Executive Order 12866 and is not likely to have a significant adverse effect on the supply, distribution, or use of energy. The Administrator of the Office of Information and Regulatory Affairs has not designated it as a significant energy action. Therefore, it does not require a Statement of Energy Effects under Executive Order 13211.

Technical Standards

The National Technology Transfer and Advancement Act (NTTAA) (15 U.S.C. 272 note) directs agencies to use voluntary consensus standards in their regulatory activities unless the agency provides Congress, through the Office of Management and Budget, with an explanation of why using these standards would be inconsistent with applicable law or otherwise impractical. Voluntary consensus standards are technical standards (*e.g.,* specifications of materials, performance, design, or operation; test methods; sampling procedures; and related management systems practices) that are developed or adopted by voluntary consensus standards bodies.

This rule does not use technical standards. Therefore, we did not consider the use of voluntary consensus standards.

Environment

We have analyzed this rule under Department of Homeland Security Management Directive 023–01 and Commandant Instruction M16475.lD, which guide the Coast Guard in complying with the National Environmental Policy Act of 1969 (NEPA) (42 U.S.C. 4321–4370f), and have concluded this action is one of a category of actions which do not individually or cumulatively have a significant effect on the human

environment. This rule is categorically excluded, under figure 2–1, paragraph (34)(g), of the Instruction. This rule involves the establishment of a safety zone. Based on our preliminary determination, there are no factors in this case that would limit the use of a categorical exclusion under section 2.B.2 of the Instruction. Therefore, we believe that this rule should be categorically excluded, under figure 2–1, paragraph (34)(g), of the Instruction, from further environmental documentation. Because this event establishes a safety zone, paragraph (34)(g) of the Instruction applies. An environmental analysis checklist and a categorical exclusion determination are available in the docket where indicated under **ADDRESSES**.

List of Subjects in 33 CFR Part 165

Harbors, Marine safety, Navigation (water), Reporting and recordkeeping requirements, Security measures, Waterways.

■ For the reasons discussed in the preamble, the Coast Guard amends 33 CFR part 165 as follows:

PART 165—REGULATED NAVIGATION AREAS AND LIMITED ACCESS AREAS

■ 1. The authority citation for part 165 continues to read as follows:

Authority: 33 U.S.C. 1226, 1231; 46 U.S.C. Chapter 701, 3306, 3703; 50 U.S.C. 191, 195; 33 CFR 1.05–1, 6.04–1, 6.04–6, and 160.5; Pub. L. 107–295, 116 Stat. 2064; Department of Homeland Security Delegation No. 0170.1.

■ 2. Add new temporary § 165.T09–0483 as follows:

§ 165.T09–0483 Safety Zone; Target Fireworks; Detroit River; Detroit, MI.

(a) *Location.* The following areas are temporary safety zones:

(1) The first safety zone area will encompass all waters of the Detroit River bounded by the arc of a circle with a 900-foot radius with its center in approximate position 42°19′23″ N, 083°04′34″ W (NAD 83).

(2) The second safety zone area will encompass a portion of the Detroit River bounded on the South by the International Boundary line, on the West by 83°03′30″ W, on the North by the City of Detroit shoreline and on the East by 083°01′15″ W (NAD 83).

(3) The third safety zone will encompass a portion of the Detroit River bounded on the South by the International Boundary line, on the West by the Ambassador Bridge, on the North by the City of Detroit shoreline, and on the East by the downstream end of Belle Isle. The Captain of the Port Detroit has determined that vessels below 65 feet in length may enter this zone.

(b) *Effective Period.*

(1) The first safety zone is effective from 7 a.m. on June 20, 2009 to 5 p.m. on June 25 2009. The first safety zone will be enforced from 7 a.m. to 9 p.m. on June 20, 2009, from 6 a.m. to 9 p.m. June 21, 2009, from 6 a.m. to 9 p.m. June 22, 2009, from 6 a.m. to 9 p.m. June 23, 2009 and from 6 a.m. to 5 p.m. on June 24, 2009. In the event of inclement weather, the first safety zone will also be enforced from 6 a.m. to 5 p.m. on June 25, 2009.

(2) The second safety zone is effective from 5 p.m. on June 24, 2009 through 12:15 a.m. on June 26, 2009. The second safety zone will be enforced from 5 p.m. on June 24, 2009 through 12:15 a.m. on June 25, 2009. In the event of inclement weather, the second safety zone will also be enforced from 5 p.m. on June 25, 2009 to 12:15 a.m. on June 26, 2009.

(3) The third safety zone is effective from 8 p.m. on June 24, 2009 through 12:15 a.m. on June 26, 2009. The third safety zone will be enforced from 8 p.m. on June 24, 2009 through 12:15 a.m. on June 25, 2009. In the event of inclement weather, the third safety zone will also be enforced from 8 p.m. on June 25, 2009 to 12:15 a.m. on June 26, 2009.

(c) *Regulations.*

(1) In accordance with the general regulations in § 165.23 of this part, entry into, transiting, or anchoring within this safety zone is prohibited unless authorized by the Captain of the Port Detroit, or his designated on-scene representative.

(2) This safety zone is closed to all vessel traffic, except as may be permitted by the Captain of the Port Detroit or his designated on-scene representative.

(3) The ''on-scene representative'' of the Captain of the Port is any Coast Guard commissioned, warrant, or petty officer who has been designated by the Captain of the Port to act on his behalf. The on-scene representative of the Captain of the Port will be aboard either a Coast Guard or Coast Guard Auxiliary vessel. The Captain of the Port or his designated on scene representative may be contacted via VHF Channel 16.

(4) Vessel operators desiring to enter or operate within the safety zone shall contact the Captain of the Port Detroit or his on-scene representative to obtain permission to do so.

(5) Vessel operators given permission to enter or operate in the safety zone must comply with all directions given to them by the Captain of the Port or his on-scene representative.

Dated: June 8, 2009.

F.M. Midgette,

Captain, U.S. Coast Guard, Captain of the Port Detroit.

[FR Doc. E9–14549 Filed 6–19–09; 8:45 am]

BILLING CODE 4910–15–P

DEPARTMENT OF VETERANS AFFAIRS

38 CFR Part 1

Collection of Debts Owed by Reason of Participation in a Benefits Program

CFR Correction

In Title 38 of the Code of Federal Regulations, Parts 0 to 17, revised as of July 1, 2008, on page 91, in § 1.911, remove paragraphs (b)(1) through (b)(4).

[FR Doc. E9–14689 Filed 6–19–09; 8:45 am]

BILLING CODE 1505–01–D

DEPARTMENT OF COMMERCE

National Oceanic and Atmospheric Administration

50 CFR Part 622

[Docket No. 040205043–4043–01]

RIN 0648–XP56

Fisheries of the Caribbean, Gulf of Mexico, and South Atlantic; Reef Fish Fishery of the Gulf of Mexico; Closure of the 2009 Deepwater Grouper Commercial Fishery

AGENCY: National Marine Fisheries Service (NMFS), National Oceanic and Atmospheric Administration (NOAA), Commerce.

ACTION: Temporary rule; closure.

SUMMARY: NMFS closes the commercial fishery for deepwater grouper (misty grouper, snowy grouper, yellowedge grouper, warsaw grouper, and speckled hind) in the exclusive economic zone (EEZ) of the Gulf of Mexico. NMFS has determined that the deepwater grouper quota for the commercial fishery will have been reached by June 27, 2009. This closure is necessary to protect the deepwater grouper resource.

DATES: Closure is effective 12:01 a.m., local time, June 27, 2009, until 12:01 a.m., local time, on January 1, 2010.

FOR FURTHER INFORMATION CONTACT: Catherine Bruger, telephone 727–551–5727, fax 727–824–5308, e-mail *Catherine.Bruger@noaa.gov*.

SUPPLEMENTARY INFORMATION: The reef fish fishery of the Gulf of Mexico is managed under the Fishery

Management Plan for the Reef Fish Resources of the Gulf of Mexico (FMP). The FMP was prepared by the Gulf of Mexico Fishery Management Council and is implemented under the authority of the Magnuson-Stevens Fishery Conservation and Management Act (Magnuson-Stevens Act) by regulations at 50 CFR part 622. Those regulations set the commercial quota for deepwater grouper in the Gulf of Mexico at 1.02 million lb (463,636 kg) for the current fishing year, January 1 through December 31, 2009.

Under 50 CFR 622.43(a), NMFS is required to close the commercial fishery for a species or species group when the quota for that species or species group is reached, or is projected to be reached, by filing a notification to that effect with the Office of the Federal Register. Based on current statistics, NMFS has determined that the available commercial quota of 1.02 million lb (463,636 kg) for deepwater grouper will be reached on or before June 27, 2009. Accordingly, NMFS is closing the commercial deepwater grouper fishery in the Gulf of Mexico EEZ from 12:01 a.m., local time, on June 27, 2009, until 12:01 a.m., local time, on January 1, 2010. The operator of a vessel with a valid commercial vessel permit for Gulf reef fish having deepwater grouper aboard must have landed and bartered, traded, or sold such deepwater grouper prior to 12:01 a.m., local time, June 27, 2009.

During the closure, the bag and possession limits specified in 50 CFR 622.39(b) apply to all harvest or possession of deepwater grouper in or from the Gulf of Mexico EEZ, and the sale or purchase of deepwater grouper taken from the EEZ is prohibited. Vessels with commercial quantities of reef fish on board are prohibited from retaining a recreational bag limit. Thus a vessel may only have a commercial quantity of reef fish or a recreational bag limit of reef fish. The prohibition on sale or purchase does not apply to sale or purchase of deepwater grouper that were harvested, landed ashore, and sold prior to 12:01 a.m., local time, June 27, 2009, and were held in cold storage by a dealer or processor.

Classification

This action responds to the best available information recently obtained from the fishery. The Assistant Administrator for Fisheries, NOAA, (AA), finds good cause to waive the requirement to provide prior notice and opportunity for public comment pursuant to the authority set forth at 5 U.S.C. 553(b)(B) as such prior notice and opportunity for public comment is unnecessary and contrary to the public interest. Such procedures would be unnecessary because the rule itself has already been subject to notice and comment, and all that remains is to notify the public of the closure. Allowing prior notice and opportunity for public comment is contrary to the public interest because of the need to immediately implement this action to protect the fishery since the capacity of the fishing fleet allows for rapid harvest of the quota. Prior notice and opportunity for public comment would require time and would potentially result in a harvest well in excess of the established quota.

For the aforementioned reasons, the AA also finds good cause to waive the 30-day delay in the effectiveness of this action under 5 U.S.C. 553(d)(3).

This action is taken under 50 CFR 622.43(a) and is exempt from review under Executive Order 12866.

Authority: 16 U.S.C. 1801 *et seq.*

Dated: June 17, 2009.

Alan D. Risenhoover,

Director, Office of Sustainable Fisheries, National Marine Fisheries Service.

[FR Doc. E9–14610 Filed 6–17–09; 4:15 pm]

BILLING CODE 3510–22–S

DEPARTMENT OF COMMERCE

National Oceanic and Atmospheric Administration

50 CFR Part 660

[Docket No. 090428799–9802–01]

RIN 0648–XP82

Fisheries off West Coast States; Pacific Coast Groundfish Fishery; Closure of the Pacific Whiting Primary Fishery for the Mothership Sector

AGENCY: National Marine Fisheries Service (NMFS), National Oceanic and Atmospheric Administration (NOAA), Commerce.

ACTION: Fishing restrictions.

SUMMARY: NMFS announces closure of the primary season for the mothership sector of the Pacific whiting fishery at 10:00 p.m. local time (l.t.) June 1, 2009. The closure was necessary because the mothership sector was projected to reach its Pacific whiting harvest guideline. This action is authorized by regulations implementing the Pacific Coast Groundfish Fishery Management Plan (FMP), which governs the groundfish fishery off Washington, Oregon, and California. This action is intended to keep the harvest of Pacific whiting at the 2009 allocation levels.

DATES: Effective from 10:00 p.m. l.t. June 1, 2009, until the start of the 2010 primary season for the mothership sector, unless modified, superseded or rescinded.

FOR FURTHER INFORMATION CONTACT: Becky Renko at 206–526–6110.

SUPPLEMENTARY INFORMATION: This action is authorized by regulations implementing the Pacific Coast Groundfish Fishery Management Plan (FMP), which governs the groundfish fishery off Washington, Oregon, and California. The regulations at 50 CFR 660.323(a) established separate allocations for the catcher/processor, mothership, and shore based sectors of the whiting fishery. The 2009 commercial Optimum Yield (OY) for Pacific whiting is 81,939 mt. This is calculated by deducting the 50,000–mt tribal set-aside and 4,000–mt for research catch and bycatch in non-groundfish fisheries from the 135,939 mt total catch OY. Each sector receives a portion of the commercial OY, with the catcher/processors getting 34 percent (27,859 mt), motherships getting 24 percent (19,665 mt), and the shore-based sector getting 42 percent (34,414 mt).

Regulations at 50 CFR 660.323 (c) provide that if the Regional Administrator determines that a portion of the tribal set-aside or another sector's allocation will not be used during the year, the Regional Administrator can reapportion that Pacific whiting to other sectors in proportion to their initial allocations. At the Pacific Fishery Management Council's March 2009 meeting, the Makah Tribal representatives stated their intent to harvest only 23,789 mt of their 42,000 mt set-aside and asked that the remaining 18,211 mt be reapportioned to the non-tribal sectors of the fishery. Therefore, the mothership sector received an additional 5,823 mt, resulting in a harvest guideline of 24,034 mt.

When each sector's Pacific whiting harvest allocation or harvest guideline is reached, the primary season for that sector is ended. The mothership sector is composed of motherships and catcher vessels that harvest whiting for delivery to motherships. Motherships are vessels that process, but do not harvest, whiting. The regulations at 50 CFR 600.323 (a)(3)(i) describe the primary season for vessels delivering to motherships as the period(s) when at-sea processing is allowed and the fishery is open for the mothership sector.

To prevent an allocation from being exceeded, regulations at 50 CFR 660.323

(e) allows closure of the commercial whiting fisheries by actual notice to the fishery participants. Actual notice includes e-mail, internet, phone, fax, letter or press release. NMFS provided actual notice on June 1, 2009 by fax and internet.

NMFS Action

This action announces the closure of the Pacific whiting primary season for the mothership sector only. The best available information on June 1, 2009, indicated that the mothership harvest guideline would be reached by 10:00 p.m. l.t. (2200 hours), June 1, 2009, at which time the primary season for the mothership sector ended and further at-sea processing and receipt of whiting by a mothership, or taking and retaining, possessing, or landing of whiting by a catcher boat in the mothership sector, was prohibited. For the reasons stated above, and in accordance with the regulations at 50 CFR 660.323(b)(2), NMFS herein announces that effective 10:00 p.m. l.t. June 1, 2009—(1) further receiving or at-sea processing of whiting by a mothership is prohibited. No additional unprocessed whiting may be brought on board after at-sea processing is prohibited, but a mothership may continue to process whiting that was on board before at-sea processing was prohibited, and (2) whiting may not be taken and retained, possessed, or landed by a catcher vessel participating in the mothership sector.

Classification

This action is authorized by the regulations implementing thegroundfish FMP. The determination to take these actions is based on the most recent data available. The aggregate data upon which the determinations are based are available for public inspectionat the office of the Regional Administrator (see **ADDRESSES**) during business hours. The Assistant Administrator for Fisheries (AA), NMFS, finds good cause to waive the requirement to provide prior notice and opportunity for comment on this action pursuant to 5 U.S.C. 553 (3)(b)(B), because providing prior notice and opportunity would be impracticable. It would be impracticable because if this restriction were delayed in order to provide notice and comment, it would allow the allocation for the mothership sector of the fishery to be greatly exceeded.

A delay to provide a cooling off period also would be expected to cause the fishery to exceed its allocation. Therefore, good cause also exists to waive the 30-day delay in effectiveness requirement of 5 U.S.C. 553 (d)(3).

This action is taken under the authority of 50 CFR 660.323(b)(4), and is exempt from review under Executive Order 12866.

Authority: 16 U.S.C. 1801 *et seq.*

Dated: June 16, 2009.

Kristen C. Koch,

Acting Director, Office of Sustainable Fisheries, National Marine Fisheries Service.

[FR Doc. E9–14609 Filed 6–19–09; 8:45 am]

BILLING CODE 3510–22–S

Proposed Rules

Federal Register
Vol. 74, No. 118
Monday, June 22, 2009

This section of the FEDERAL REGISTER contains notices to the public of the proposed issuance of rules and regulations. The purpose of these notices is to give interested persons an opportunity to participate in the rule making prior to the adoption of the final rules.

DEPARTMENT OF THE TREASURY

Alcohol and Tobacco Tax and Trade Bureau

27 CFR Parts 40, 41, 44, and 45

[Docket No. TTB–2009–0002; Notice No. 95; Re: T.D. TTB–78]

RIN 1513–AB72

Implementation of Statutory Amendments Requiring the Qualification of Manufacturers and Importers of Processed Tobacco and Other Amendments Related to Permit Requirements, and the Expanded Definition of Roll-Your-Own Tobacco

AGENCY: Alcohol and Tobacco Tax and Trade Bureau, Treasury.

ACTION: Notice of proposed rulemaking; cross-reference to temporary rule.

SUMMARY: Elsewhere in this issue of the **Federal Register**, the Alcohol and Tobacco Tax and Trade Bureau is issuing a temporary rule to implement certain changes made to the Internal Revenue Code of 1986 by the Children's Health Insurance Program Reauthorization Act of 2009. The principal changes involve permit and related requirements for manufacturers and importers of processed tobacco and an expansion of the definition of roll-your-own tobacco. The text of the regulations in the temporary rule published in the Rules and Regulations section of this issue of the **Federal Register** serves as the text of the proposed regulations.

DATES: Comments must be received on or before August 21, 2009.

ADDRESSES: You may send comments on this notice to one of the following addresses:

- *http://www.regulations.gov* (via the online comment form for this notice as posted within Docket No. TTB–2009–0001 at ''Regulations.gov,'' the Federal e-rulemaking portal);
- Director, Regulations and Rulings Division, Alcohol and Tobacco Tax and Trade Bureau, P.O. Box 14412, Washington, DC 20044–4412; or
- *Hand Delivery/Courier in Lieu of Mail:* Alcohol and Tobacco Tax and Trade Bureau, 1310 G Street, NW., Suite 200–E, Washington, DC 20005.

See the Public Participation section of this notice for specific instructions and requirements for submitting comments, and for information on how to request a public hearing.

You may view copies of this notice, any comments received, and the related temporary rule at *http://www.regulations.gov.* A direct link to the appropriate Regulations.gov docket is also available under Notice No. 95 on the TTB Web site at *http://www.ttb.gov/regulations_laws/all_rulemaking.shtml.* You also may view copies of these documents by appointment at the TTB Information Resource Center, 1310 G Street, NW., Washington, DC 20220. To make an appointment, call 202–927–2400.

FOR FURTHER INFORMATION CONTACT: For questions concerning processed tobacco permit and authorization procedures, contact the National Revenue Center, Alcohol and Tobacco Tax and Trade Bureau (1–877–882–3277); for other questions concerning this document, contact Amy Greenberg, Regulations and Rulings Division, Alcohol and Tobacco Tax and Trade Bureau (202–927–8210).

SUPPLEMENTARY INFORMATION:

Background

In the Rules and Regulations section of this issue of the **Federal Register**, we are publishing a temporary rule setting forth regulatory amendments to implement certain provisions of the Children's Health Insurance Program Reauthorization Act of 2009 (CHIPRA) (Pub. L. 111–3, 123 Stat. 8). The principal changes made by CHIPRA that are the basis for the regulatory amendments contained in this document involve permit and related requirements for manufacturers and importers of processed tobacco and an expansion of the definition of roll-your-own tobacco.

The temporary regulations published elsewhere in this issue of the **Federal Register** involve amendments to parts 40, 41, 44, and 45 of the TTB regulations (27 CFR parts 40, 41, 44, and 45). The text of the temporary regulations serves as the text of these proposed regulations. The preamble to the temporary regulations explains the proposed regulations.

Public Participation

Comments Invited

We invite comments from interested members of the public on this proposed rulemaking.

Submitting Comments

You may submit comments on this notice by one of the following three methods:

- *Federal e-Rulemaking Portal:* You may electronically submit comments on this notice through ''Regulations.gov,'' the Federal e-rulemaking portal. A direct link to the Regulations.gov docket containing this notice and its related comment submission form is available on the TTB Web site at *http://www.ttb.gov/regulations_laws/all_rulemaking.shtml* under Notice No. 95. You may also reach this notice and its related comment form via the Regulations.gov search page at *http://www.regulations.gov.* Supplemental files may be attached to comments submitted via Regulations.gov. For complete instructions on how to use Regulations.gov, visit the site and click on ''User Guide'' under ''How to Use this Site.''
- *Mail:* You may send written comments to the Director, Regulations and Rulings Division, Alcohol and Tobacco Tax and Trade Bureau, P.O. Box 14412, Washington, DC 20044–4412.
- *Hand Delivery/Courier:* You may hand-carry your comments or have them hand-carried to the Alcohol and Tobacco Tax and Trade Bureau, 1310 G Street, NW., Suite 200–E, Washington, DC 20005.

Please submit your comments by the closing date shown above in this notice. Your comments must reference Notice No. 95 and include your name and mailing address. Your comments also must be made in English, be legible, and be written in language acceptable for public disclosure. We do not acknowledge receipt of comments, and we consider all comments as originals.

If you are commenting on behalf of an association, business, or other entity, your comment must include the entity's name as well as your name and position title. If you comment via *http://www.regulations.gov,* please enter the

entity's name in the ''Organization'' blank of the comment form. If you comment via mail, please submit your entity's comment on letterhead.

You may also write to the Administrator before the comment closing date to ask for a public hearing. The Administrator reserves the right to determine whether to hold a public hearing.

Confidentiality

All submitted comments and attachments are part of the public record and subject to disclosure. Do not enclose any material in your comments that you consider to be confidential or inappropriate for public disclosure.

Public Disclosure

On the Federal e-rulemaking portal, Regulations.gov, we will post, and you may view, copies of this notice, any electronic or mailed comments we receive about this proposal, and the related temporary rule. A direct link to the Regulations.gov docket containing this notice and the comments received on this proposal is available on the TTB Web site at *http://www.ttb.gov/regulations_laws/all_rulemaking.shtml* under Notice No. 95. You may also reach the relevant docket through the Regulations.gov search page at *http://www.regulations.gov.*

All posted comments will display the commenter's name, organization (if any), city, and State, and, in the case of mailed comments, all address information, including e-mail addresses. We may omit voluminous attachments or material that we consider unsuitable for posting.

You also may view copies of this notice, any electronic or mailed comments we receive about this proposal, and the related temporary rule by appointment at the TTB Information Resource Center, 1310 G Street, NW., Washington, DC 20220. You may also obtain copies at 20 cents per 8.5- x 11-inch page. Contact our information specialist at the above address or by telephone at 202–927–2400 to schedule an appointment or to request copies of comments or other materials.

Regulatory Flexibility Act, Paperwork Reduction Act, and Executive Order 12866

Since the regulatory text proposed in this notice of proposed rulemaking is identical to that contained in the companion temporary rule published elsewhere in this issue of the **Federal Register**, the analyses contained in the preamble of the temporary rule concerning the Regulatory Flexibility Act, the Paperwork Reduction Act, and Executive Order 12866 also apply to this proposed rule.

Drafting Information

Amy Greenberg of the Regulations and Rulings Division, Alcohol and Tobacco Tax and Trade Bureau, drafted this document. However, other personnel participated in its development.

List of Subjects

27 CFR Part 40

Cigars and cigarettes, Claims, Electronic funds transfers, Excise taxes, Imports, Labeling, Packaging and containers, Reporting and recordkeeping requirements, Surety bonds, Tobacco.

27 CFR Part 41

Cigars and cigarettes, Claims, Customs duties and inspection, Electronic funds transfers, Excise taxes, Imports, Labeling, Packaging and containers, Puerto Rico, Reporting and recordkeeping requirements, Surety bonds, Tobacco, Virgin Islands, Warehouses.

27 CFR Part 44

Aircraft, Armed forces, Cigars and cigarettes, Claims, Customs duties and inspection, Excise taxes, Exports, Foreign trade zones, Labeling, Packaging and containers, Reporting and recordkeeping requirements, Surety bonds, Tobacco, Vessels, Warehouses.

27 CFR Part 45

Administrative practice and procedure, Authority delegations (Government agencies), Cigars and cigarettes, Excise taxes, Labeling, Packaging and containers, Reporting and recordkeeping requirements, Tobacco.

Proposed Amendments to the Regulations

For the reasons discussed in the preamble, TTB proposes to amend 27 CFR, chapter I, parts 40, 41, 44, and 45 as follows:

PART 40—MANUFACTURE OF TOBACCO PRODUCTS AND CIGARETTE PAPERS AND TUBES

1. The authority citation for part 40 is revised to read as follows:

Authority: 26 U.S.C. 5142, 5143, 5146, 5701–5705, 5711–5713, 5721–5723, 5731, 5741, 5751, 5753, 5761–5763, 6061, 6065, 6109, 6151, 6301, 6302, 6311, 6313, 6402, 6404, 6423, 6676, 6806, 7011, 7212, 7325, 7342, 7502, 7503, 7606, 7805; 31 U.S.C. 9301, 9303, 9304, 9306.

2. [The proposed amendatory instructions and the proposed amended regulatory text for part 40 are the same as the amendatory instructions and the amended regulatory text set forth in the temporary rule on this subject published in the Rules and Regulations section of this issue of the **Federal Register**.]

PART 41—IMPORTATION OF TOBACCO PRODUCTS AND CIGARETTE PAPERS AND TUBES

3. The authority citation for part 41 is revised to read as follows:

Authority: 26 U.S.C. 5701–5705, 5708, 5712, 5713, 5721–5723, 5741, 5754, 5761–5763, 6301, 6302, 6313, 6402, 6404, 7101, 7212, 7342, 7606, 7651, 7652, 7805; 31 U.S.C. 9301, 9303, 9304, 9306.

4. [The proposed amendatory instructions and the proposed amended regulatory text for part 41 are the same as the amendatory instructions and the amended regulatory text set forth in the temporary rule on this subject published in the Rules and Regulations section of this issue of the **Federal Register**.]

PART 44—EXPORTATION OF TOBACCO PRODUCTS AND CIGARETTE PAPERS AND TUBES, WITHOUT PAYMENT OF TAX, OR WITH DRAWBACK OF TAX

5. The authority citation for part 44 is revised to read as follows:

Authority: 26 U.S.C. 5701–5705, 5708, 5711–5713, 5721–5723, 5731, 5741, 5751, 5754, 6061, 6065, 6151, 6402, 6404, 6806, 7011, 7212, 7342, 7606, 7805; 31 U.S.C. 9301, 9303, 9304, 9306.

6. [The proposed amendatory instructions and the proposed amended regulatory text for part 44 are the same as the amendatory instructions and the amended regulatory text set forth in the temporary rule on this subject published in the Rules and Regulations section of this issue of the **Federal Register**.]

PART 45—REMOVAL OF TOBACCO PRODUCTS AND CIGARETTE PAPERS AND TUBES, WITHOUT PAYMENT OF TAX, FOR USE OF THE UNITED STATES

7. The authority citation for part 45 is revised to read as follows:

Authority: 26 U.S.C. 5702–5705, 5723, 5741, 5751, 5762, 5763, 6313, 7212, 7342, 7606, 7805; 44 U.S.C. 3504(h).

8. [The proposed amendatory instructions and the proposed amended regulatory text for part 45 are the same as the amendatory instructions and the amended regulatory text set forth in the temporary rule on this subject published in the Rules and Regulations section of this issue of the **Federal Register**.]

Signed: April 15, 2009.

John J. Manfreda,

Administrator.

Approved: May 26, 2009.

Timothy E. Skud,

Deputy Assistant Secretary (Tax, Trade, and Tariff Policy).

[FR Doc. E9–14548 Filed 6–19–09; 8:45 am]

BILLING CODE 4810–31–P

DEPARTMENT OF DEFENSE

Office of the Secretary

32 CFR Part 199

[DOD–2009–HA–0051]

RIN 0720–AB31

TRICARE; Coverage of National Cancer Institute (NCI) Sponsored Phase I Studies

AGENCY: Office of the Secretary, DoD.

ACTION: Proposed rule.

SUMMARY: This proposed rule adds coverage of National Cancer Institute (NCI) sponsored Phase I studies for certain beneficiaries. The NCI sponsored clinical treatment trials are conducted in a series of steps called phases. Phase I trials are the first studies conducted in people. They evaluate how a new drug should be given (by mouth, injected into the blood, or injected into the muscle), how often, and what dose is safe.

DATES: Written comments received at the address indicated below by August 21, 2009 will be accepted.

ADDRESSES: You may submit comments, identified by docket number and/or Regulatory Information Number (RIN) number and title, by either of the following methods:

- *Federal Rulemaking Portal: http://www.regulations.gov.* Follow the instructions for submitting comments.
- *Mail:* Federal Docket Management System Office, 1160 Defense Pentagon, Washington, DC 20301–1160.

Instructions: All submissions received must include the agency name and docket number or RIN for this **Federal Register** document. The general policy for comments and other submissions from members of the public is to make these submissions available for public viewing on the Internet at *http://www.regulations.gov* as they are received without change, including any personal identifiers or contact information.

FOR FURTHER INFORMATION CONTACT: Colonel John Kugler, TRICARE Management Activity, Office of the Chief Medical Officer, telephone (703) 681–0064.

SUPPLEMENTARY INFORMATION: This proposed rule adds the coverage of a subset of National Cancer Institute (NCI) sponsored Phase I trials for certain TRICARE patients. The NCI sponsored clinical treatment trials are conducted in a series of steps called phases. Phase I trials are the first studies conducted in people. They evaluate how a new drug should be given (by mouth, injected into the blood, or injected into the muscle), how often, and what dose is safe. A Phase I trial usually enrolls only a small number of patients, sometimes as few as a dozen. A Phase II trial continues to test the safety of the drug, and begins to evaluate how well the new drug works. Phase II studies usually focus on a particular type of cancer. A Phase III trial tests a new drug, a new combination of drugs, or a new surgical procedure in comparison to the current standard. A participant will usually be assigned to the standard group or the new group at random. Phase III trials often enroll large numbers of people and may be conducted at many doctors' offices, clinics, and cancer centers nationwide.

This proposed rule adds coverage only of NCI sponsored Phase I trials with clinical or preclinical data providing a reasonable expectation that the treatment will be at least as effective as the non-investigational alternative. Additionally, only those TRICARE patients for whom standard treatment has been or would be ineffective, does not exist, or there is no superior non-investigational treatment alternative, would be eligible for these additional trials. TRICARE has covered NCI sponsored Phase II and III trials since 1996. The NCI estimates that Phase I trial participants represent about 3.4 percent of overall Phase II and III participants combined. Based on the history of DoD participation in these studies, it is estimated that there would be a maximum of one thousand new patients annually enrolling in Phase I trials. It is estimated that the net cost to TRICARE of adding Phase I treatment trials will increase costs by 12.8 percent of the total gross costs (approximately $150,000 in FY09). Currently ten states mandate coverage of at least some Phase I trials.

Regulatory Procedures

Executive Order 12866, ''Regulatory Planning and Review''

Section 801 of title 5, United States Code (U.S.C.), and Executive Order (E.O.) 12866 requires certain regulatory assessments and procedures for any major rule or significant regulatory action, defined as one that would result in an annual effect of $100 million or more on the national economy or which would have other substantial impacts. It has been certified that this rule is not an economically significant rule, however, it is a regulatory action which has been reviewed by the Office of Management and Budget as required under the provisions of E.O. 12866.

Sec. 202, Public Law 104–4, ''Unfunded Mandates Reform Act''

It has been certified that this rule does not contain a Federal mandate that may result in the expenditure by State, local and tribal governments, in aggregate, or by the private sector, of $100 million or more in any one year.

Public Law 96–354, ''Regulatory Flexibility Act'' (5 U.S.C. 601)

The Regulatory Flexibility Act (RFA) requires each Federal agency prepare, and make available for public comment, a regulatory flexibility analysis when the agency issues a regulation which would have a significant impact on a substantial number of small entities. This proposed rule will not significantly affect a substantial number of small entities for purposes of the RFA.

Public Law 96–511, ''Paperwork Reduction Act'' (44 U.S.C. Chapter 35)

This rule will not impose additional information collection requirements on the public under the Paperwork Reduction Act of 1995 (44 U.S.C. 3501–3511).

Executive Order 13132, ''Federalism''

This proposed rule has been examined for its impact under E.O. 13132 and it does not contain policies that have federalism implications that would have substantial direct effects on the States, on the relationship between the national government and the States, or on the distribution of power and responsibilities among the various levels of government; therefore, consultation with State and local officials is not required.

List of Subjects in 32 CFR Part 199

Claims, Dental health, Health care, Health insurance, Individuals with disabilities, Military personnel.

Accordingly, 32 CFR Part 199 is proposed to be amended as follows:

PART 199—[AMENDED]

1. The authority citation for Part 199 continues to read as follows:

Authority: 5 U.S.C. 301; 10 U.S.C. Chapter 55.

2. Section 199.4 is amended by:

A. Redesignating paragraphs (e)(26)(ii)(B)(*2*), (*3*) and (*4*) as paragraphs (e)(26)(ii)(B)(*3*), (*4*) and (*5*);

B. Adding a sentence to the end of the introductory text in paragraph (e)(26)(ii)(B);

C. Revising paragraph (e)(26)(ii)(B)(*1*)(*ii*);

D. Revising paragraph (e)(26)(ii)(B)(*1*)(*iv*);

E. Adding new paragraph (e)(26)(ii)(B)(*1*)(*v*); and

F. Adding a new paragraph (e)(26)(ii)(B)(*2*) to read as follows:

§ 199.4 Basic program benefits.

* * * * *

(e) * * *

(26) * * *

(ii) * * *

(B) * * * Additionally, Phase I studies may be approved on a case by case basis when the requirements below are met.

(*1*) * * *

(*ii*) Such treatments are NCI sponsored Phase I, Phase II or Phase III protocols; and

* * * * *

(*iv*) The institutional and individual providers are CHAMPUS authorized providers; and,

(*v*) The requirements for Phase I protocols in paragraph (e)(26)(ii)(B)(*2*) of this section are met:

(*2*) Requirements for Phase I protocols are:

(*i*) Standard treatment has been or would be ineffective, does not exist, or there is no superior non-investigational treatment alternative; and,

(*ii*) The available clinical or preclinical data provide a reasonable expectation that the treatment will be at least as effective as the non-investigational alternative; and,

(*iii*) The facility and personnel providing the treatment are capable of doing so by virtue of their experience, training, and volume of patients treated to maintain expertise; and,

(*iv*) The referring physician has concluded that the enrollee's participation in such a trial would be appropriate based upon the satisfaction of paragraphs (e)(26)(ii)(B)(*2*)(*i*) through (e)(26)(ii)(B)(*2*)(*iii*) of this section.

* * * * *

Dated: May 15, 2009.

Patricia Toppings,

OSD Federal Register Liaison Officer, Department of Defense.

[FR Doc. E9–14441 Filed 6–19–09; 8:45 am]

BILLING CODE 5001–06–P

DEPARTMENT OF HOMELAND SECURITY

Coast Guard

33 CFR Part 100

[USCG–2009–0400]

RIN 1625–AA08

Regattas and Marine Parades; Great Lakes Annual Marine Events

AGENCY: Coast Guard, DHS.

ACTION: Notice of proposed rulemaking.

SUMMARY: The Coast Guard proposes to amend special local regulations for annual regattas and marine parades in the Captain of the Port Sault Sainte Marie zone. This action is necessary to protect and separate the public from the hazards of these events. This proposed rule will establish restrictions upon, and control movement of, vessels in a specified area immediately prior to, during, and immediately after regattas or marine parades.

DATES: Comments and related materials must reach the Coast Guard on or before July 22, 2009.

ADDRESSES: You may submit comments identified by Coast Guard docket number USCG–2009–0400 to the Docket Management Facility at the U.S. Department of Transportation. To avoid duplication, please use only one of the following methods:

(1) *Online: http://www.regulations.gov.*

(2) *Mail:* Docket Management Facility (M–30), U.S. Department of Transportation, West Building Ground Floor, Room W12–140, 1200 New Jersey Avenue, SE., Washington, DC 20590–0001.

(3) *Hand delivery:* Room W12–140 on the Ground Floor of the West Building, 1200 New Jersey Avenue, SE., Washington, DC 20590, between 9 a.m. and 5 p.m., Monday through Friday, except Federal holidays. The telephone number is 202–366–9329.

(4) *Fax:* 202–493–2251.

FOR FURTHER INFORMATION CONTACT: LCDR Christopher Friese, Prevention Dept. Chief, Sector Sault Sainte Marie, 337 Water St., Sault Sainte Marie, MI 49783; 906–635–3220.

I. Public Participation and Request for Comments

We encourage you to participate in this rulemaking by submitting comments and related materials. All comments received will be posted, without change, to *http://www.regulations.gov* and will include any personal information you have provided. We have an agreement with the Department of Transportation (DOT) to use the Docket Management Facility. Please see DOT's ''Privacy Act'' paragraph below.

A. Submitting Comments

If you submit a comment, please include the docket number for this rulemaking (USCG–2009–0400), indicate the specific section of this document to which each comment applies, and give the reason for each comment. We recommend that you include your name, mailing address, and an e-mail address or other contact information in the body of your document to ensure that you can be identified as the submitter. This also allows us to contact you in the event further information is needed or if there are questions. For example, if we cannot read your submission due to technical difficulties and you cannot be contacted; your submission may not be considered. You may submit your comments and material by electronic means, mail, fax, or delivery to the Docket Management Facility at the address under **ADDRESSES**; but please submit your comments and material by only one means. If you submit them by mail or delivery, submit them in an unbound format, no larger than 8½ by 11 inches, suitable for copying and electronic filing. If you submit them by mail and would like to know that they reached the Facility, please enclose a stamped, self-addressed postcard or envelope. We will consider all comments and material received during the comment period. We may change this proposed rule in view of them.

B. Viewing Comments and Documents

To view comments, as well as documents mentioned in this preamble as being available in the docket, go to *http://www.regulations.gov* at any time, click on ''Search for Dockets,'' and enter the docket number for this rulemaking (USCG–2008–XXXX) in the Docket ID box, and click enter. You may also visit the Docket Management Facility in Room W12–140 on the ground floor of the DOT West Building, 1200 New Jersey Avenue, SE., Washington, DC 20590, between 9 a.m. and 5 p.m., Monday through Friday, except Federal holidays.

C. Privacy Act

Anyone can search the electronic form of all comments received into any of our dockets by the name of the individual submitting the comment (or signing the comment, if submitted on behalf of an association, business, labor union, etc.). You may review the

Department of Transportation's Privacy Act Statement in the **Federal Register** published on April 11, 2000 (65 FR 19477), or you may visit *http://DocketsInfo.dot.gov.*

SUPPLEMENTARY INFORMATION:

Public Meeting

We do not now plan to hold a public meeting. But you may submit a request for a meeting by writing to Commander, Coast Guard Sector Sault Sainte Marie at the address under **ADDRESSES** explaining why one would be beneficial. If we determine that one would aid this rulemaking, we will hold one at a time and place announced by a later notice in the **Federal Register**.

Background and Purpose

This proposed rule will add several regattas and marine parades not previously listed in 33 CFR Part 100. The specific events to be added are Copperhead Regatta, Houghton, MI, Spirit of the Lake Regatta, Superior, WI, Point to LaPoint Swim, LaPoint, WI, Duluth Rowing International Regatta, and Grand Marais Splash In, Grand Marais, MI.

Discussion of Proposed Rule

This proposed rule is intended to ensure safety of life on the navigable waters immediately prior to, during, and immediately after regattas or marine parades. This proposed rule will establish restrictions upon and control the movement of vessels through a specified area immediately prior to, during, and immediately after regattas or marine parades.

The Captain of the Port will cause notice of enforcement of the special local regulations established by this section to be made by all appropriate means to the affected segments of the public. Such means of notification will include, but is not limited to, Broadcast Notice to Mariners and Local Notice to Mariners. The Captain of the Port will issue a Broadcast Notice to Mariners notifying the public when enforcement of the special local regulations is terminated.

Regulatory Evaluation

This proposed rule is not a ''significant regulatory action'' under section 3(f) of Executive Order 12866, Regulatory Planning and Review, and does not require an assessment of potential costs and benefits under section 6(a)(3) of that Order. The Office of Management and Budget has not reviewed it under that Order.

We expect the economic impact of this proposed rule to be so minimal that a full Regulatory Evaluation is unnecessary.

The Coast Guard's use of these special local regulations will be periodic in nature, of short duration, and designed to minimize the impact on navigable waters. These special local regulations will only be enforced immediately before and during the time the marine events are occurring. Furthermore, these special local regulations have been designed to allow vessels to transit unrestricted to portions of the waterways not affected by the special local regulations. The Coast Guard expects insignificant adverse impact to mariners from the activation of these special local regulations.

Small Entities

Under the Regulatory Flexibility Act (5 U.S.C. 601–612), we have considered whether this proposed rule would have a significant economic impact on a substantial number of small entities. The term ''small entities'' comprises small businesses, not-for-profit organizations that are independently owned and operated and are not dominant in their fields, and governmental jurisdictions with populations of less than 50,000.

The Coast Guard certifies under 5 U.S.C. 605(b) that this proposed rule would not have a significant economic impact on a substantial number of small entities.

This proposed rule would affect the following entities, some of which might be small entities: The owners or operators of vessels intending to transit or anchor in the areas designated as special local regulations in this rule during the dates and times the special local regulations are being enforced.

These special local regulations would not have a significant economic impact on a substantial number of small entities for the following reasons. The special local regulations in this proposed rule would be in effect for short periods of time, and only once per year. The special local regulations have been designed to allow traffic to pass safely around the zone whenever possible and vessels will be allowed to pass through the zones with the permission of the Captain of the Port.

If you think that your business, organization, or governmental jurisdiction qualifies as a small entity and that this proposed rule would have a significant economic impact on it, please submit a comment (see **ADDRESSES**) explaining why you think it qualifies and how and to what degree this proposed rule would economically affect it.

Assistance for Small Entities

Under section 213(a) of the Small Business Regulatory Enforcement Fairness Act of 1996 (Pub. L. 104–121), we want to assist small entities in understanding this proposed rule so that they can better evaluate its effects on them and participate in the rulemaking. If the proposed rule would affect your small business, organization, or governmental jurisdiction and you have questions concerning its provisions or options for compliance, please contact LCDR Christopher Friese, Prevention Dept. Chief, Sector Sault Sainte Marie, 337 Water St., Sault Sainte Marie, MI 49783; 906–635–3220. The Coast Guard will not retaliate against small entities that question or complain about this proposed rule or any policy or action of the Coast Guard.

Collection of Information

This proposed rule calls for no new collection of information under the Paperwork Reduction Act of 1995 (44 U.S.C. 3501–3520).

Federalism

A rule has implications for federalism under Executive Order 13132, Federalism, if it has a substantial direct effect on State or local governments and would either preempt State law or impose a substantial direct cost of compliance on them. We have analyzed this proposed rule under that Order and have determined that it does not have implications for federalism.

Unfunded Mandates Reform Act

The Unfunded Mandates Reform Act of 1995 (2 U.S.C. 1531–1538) requires Federal agencies to assess the effects of their discretionary regulatory actions. In particular, the Act addresses actions that may result in the expenditure by a State, local, or tribal government, in the aggregate, or by the private sector of $100,000,000 or more in any one year. Though this proposed rule will not result in such expenditure, we nevertheless discuss its effects elsewhere in this preamble.

Taking of Private Property

This proposed rule will not effect a taking of private property or otherwise have taking implications under Executive Order 12630, Governmental Actions and Interference with Constitutionally Protected Property Rights.

Civil Justice Reform

This proposed rule meets applicable standards in sections 3(a) and 3(b)(2) of Executive Order 12988, Civil Justice Reform, to minimize litigation,

eliminate ambiguity, and reduce burden.

Protection of Children

We have analyzed this proposed rule under Executive Order 13045, Protection of Children from Environmental Health Risks and Safety Risks. This proposed rule is not an economically significant rule and does not create an environmental risk to health or risk to safety that may disproportionately affect children.

Indian Tribal Governments

The Coast Guard recognizes the treaty rights of Native American Tribes. Moreover, the Coast Guard is committed to working with Tribal Governments to implement local policies and to mitigate tribal concerns. We have determined that these safety zones and fishing rights protection need not be incompatible. We have also determined that this proposed rule does not have tribal implications under Executive Order 13175, Consultation and Coordination with Indian Tribal Governments, because it does not have a substantial direct effect on one or more Indian tribes, on the relationship between the Federal Government and Indian tribes, or on the distribution of power and responsibilities between the Federal Government and Indian tribes. Nevertheless, Indian Tribes that have questions concerning the provisions of this proposed rule or options for compliance are encouraged to contact the point of contact listed under **FOR FURTHER INFORMATION CONTACT**.

Energy Effects

We have analyzed this proposed rule under Executive Order 13211, Actions Concerning Regulations That Significantly Affect Energy Supply, Distribution, or Use. We have determined that it is not a ''significant energy action'' under that order because it is not a ''significant regulatory action'' under Executive Order 12866 and is not likely to have a significant adverse effect on the supply, distribution, or use of energy. The Administrator of the Office of Information and Regulatory Affairs has not designated it as a significant energy action. Therefore, it does not require a Statement of Energy Effects under Executive Order 13211.

Technical Standards

The National Technology Transfer and Advancement Act (NTTAA) (15 U.S.C. 272 note) directs agencies to use voluntary consensus standards in their regulatory activities unless the agency provides Congress, through the Office of Management and Budget, with an explanation of why using these standards would be inconsistent with applicable law or otherwise impractical. Voluntary consensus standards are technical standards (e.g., specifications of materials, performance, design, or operation; test methods; sampling procedures; and related management systems practices) that are developed or adopted by voluntary consensus standards bodies.

This proposed rule does not use technical standards. Therefore, we did not consider the use of voluntary consensus standards.

Environment

We have analyzed this proposed rule under Commandant Instruction M16475.lD and Department of Homeland Security Management Directive 023–01, which guide the Coast Guard in complying with the National Environmental Policy Act of 1969 (NEPA) (42 U.S.C. 4321–4370f), and have made a preliminary determination that this action is not likely to have a significant effect on the human environment. An environmental analysis checklist supporting this preliminary determination is available in the docket where indicated under **ADDRESSES**. We seek any comments or information that may lead to the discovery of a significant environmental impact from this proposed rule.

List of Subjects in 33 CFR Part 100

Harbors, Marine safety, Navigation (water), Reporting and recordkeeping requirements, Security measures, Waterways.

For the reasons discussed in the preamble, the Coast Guard proposes to amend 33 CFR part 100 as follows:

PART 100—SAFETY OF LIFE ON NAVIGABLE WATERS

1. The authority citation for Part 100 continues to read as follows:

Authority: 33 U.S.C. 1233.

2. Add § 100.921 to read as follows:

§ 100.921 Copperhead Regatta, Houghton, MI.

(a) Regulated Area. A regulated area is established to encompass all waters west of the boundary line created by points 47°06′48″ N, 088°30′04″ W and 47°06′34″ N, 088°30′48″ W to the Houghton area lift Bridge (NAD 1983).

(b) Special Local Regulations. The regulations of § 100.901 apply. No vessel may enter, transit through, or anchor within the regulated area without the permission of the Coast Guard Patrol Commander.

(c) Effective date: The last Saturday in September. The exact dates and times for this event will be determined annually, and published through Local Notice to Mariners and Broadcast Notice to Mariners.

3. Add § 100.922 to read as follows:

§ 100.922 Spirit of the Lake Regatta, Superior, WI.

(a) Regulated Area. A regulated area is established to encompass all waters within the Superior Front Channel bounded by a line starting at 46°42.47′ N, 092°02.42′ W then running northeast to position 46°42.52′ N, 092°02.36′ W then running northwest to position 46°44.30′ N, 092°04.75′ W then running southwest to position 46°44.26′ N, 092°05.03′ W then running southeast back to the starting point (NAD 1983).

(b) Special Local Regulations. The regulations of § 100.901 apply. No vessel may enter, transit through, or anchor within the regulated area without the permission of the Coast Guard Patrol Commander.

(c) Effective Date. This event occurs the second weekend in September. The exact dates and times for this event will be determined annually, and published through Local Notice to Mariners and Broadcast Notice to Mariners.

4. Add § 100.923 to read as follows:

§ 100.923 Pointe to LaPointe Swim, LaPointe, WI.

(a) Regulated Area. A regulated area is established to include all waters of Lake Superior extending 50 yards on both sides of a line starting at position 46°48.50′ N, 090°48.41′ W then running southeast to position 46°47.12′ N, 090°47.19′ W (NAD 1983).

(b) Special Local Regulations. The regulations of § 100.901 apply. No vessel may enter, transit through, or anchor within the regulated area without the permission of the Coast Guard Patrol Commander.

(c) Effective Date. This event occurs the second weekend in August. The exact dates and times for this event will be determined annually and published through Local Notice to Mariners and Broadcast Notice to Mariners.

5. Add § 100.924 to read as follows:

§ 100.924 Duluth Rowing International Regatta.

(a) Regulated Area. A regulated area is established to include all waters adjacent to Park Point in Duluth-Superior Harbor within the following boundaries beginning at latitude 46°45′19.3″ N, longitude 92°04′43″ W; thence to latitude 46°45′11.7″ N, longitude 92°05′01″ W; thence to latitude 46°44′21.2″ N, longitude 92°04′15.7″ W; thence to latitude

46°44′29.4″ N, longitude 92°03′57.5″ W; thence to the point of beginning (NAD 1983). This area is also the Special Anchorage Area for Duluth-Superior Harbor as designated in 33 CFR § 110.77a.

(b) Special Local Regulations. The regulations of § 100.901 apply. No vessel may enter, transit through, or anchor within the regulated area without the permission of the Coast Guard Patrol Commander.

(c) Effective Date. This event occurs the second weekend in July. The exact dates and times for this event will be determined annually and published through Local Notice to Mariners and Broadcast Notice to Mariners.

6. Add § 100.925 to read as follows:

§ 100.925 Grand Marais Splash In, Grand Marais, MI.

(a) Regulated Area. A regulated area is established to include all waters of Lake Superior within a 1500-foot radius of position 46°40.37′ N, 085°58.74′ W (NAD 1983).

(b) Special Local Regulations. The regulations of § 100.901 apply. No vessel may enter, transit through, or anchor within the regulated area without the permission of the Coast Guard Patrol Commander.

(c) Effective Date. This event occurs the third week in June. The exact dates and times for this event will be determined annually and published through Local Notice to Mariners and Broadcast Notice to Mariners.

Dated: June 8, 2009.

M.J. Huebschman,

Captain, U.S. Coast Guard, Captain of the Port Sault Sainte Marie.

[FR Doc. E9–14552 Filed 6–19–09; 8:45 am]

BILLING CODE 4910–15–P

DEPARTMENT OF HOMELAND SECURITY

Coast Guard

33 CFR Part 146

[Docket Number USCG–2008–1088]

RIN 1625–AB28

Notice of Arrival on the Outer Continental Shelf

AGENCY: Coast Guard, DHS.

ACTION: Notice of proposed rulemaking.

SUMMARY: The Coast Guard proposes to enhance maritime domain safety and security awareness on units and personnel engaging in activities on the Outer Continental Shelf by proposing regulations which will require notice of arrival for units planning to engage in Outer Continental Shelf activities. The proposed rules would implement provisions of the Security and Accountability for Every Port Act of 2006 and increase overall maritime domain awareness by requiring owners or operators of United States and foreign flag floating facilities, mobile offshore drilling units, and vessels to submit notice of arrival information to the National Vessel Movement Center prior to engaging in Outer Continental Shelf activities.

DATES: Comments and related material must either be submitted to our online docket via *http://www.regulations.gov* on or before September 21, 2009 or reach the Docket Management Facility by that date.

Comments sent to the Office of Management and Budget (OMB) on collection of information must reach OMB on or before September 21, 2009.

ADDRESSES: You may submit comments identified by Coast Guard docket number USCG–2008–1088 using any one of the following methods:

(1) *Federal eRulemaking Portal http://www.regulations.gov*;

(2) *Fax:* 202–493–2251.

(3) *Mail:* Docket Management Facility (M–30), U.S. Department of Transportation, West Building Ground Floor, Room W12–140, 1200 New Jersey Avenue, SE., Washington, DC 20590–0001.

(4) *Hand delivery:* Same as mail address above, between 9 a.m. and 5 p.m., Monday through Friday, except Federal holidays. The telephone number is 202–366–9329.

To avoid duplication, please use only one of these methods. For instructions on submitting comments, see the ''Public Participation and Request for Comments'' portion of the **SUPPLEMENTARY INFORMATION** section below for instructions on submitting comments.

Collection of Information Comments: If you have comments on the collection of information discussed in section V.D. of this notice of proposed rulemaking (NPRM), you must also send comments to the Office of Information and Regulatory Affairs (OIRA), Office of Management and Budget. To ensure that your comments to OIRA are received on time, the preferred methods are by e-mail to *oira_submission@omb.eop.gov* (include the docket number and ''Attention: Desk Officer for Coast Guard, DHS'' in the subject line of the e-mail) or fax at 202–395–6566. An alternate, though slower, method is by U.S. mail to the Office of Information and Regulatory Affairs, Office of Management and Budget, 725 17th Street, NW., Washington, DC 20503, ATTN: Desk Officer, U.S. Coast Guard.

FOR FURTHER INFORMATION CONTACT: If you have questions on this proposed rule, call or e-mail Mr. James M. Magill, Vessel and Facility Operating Standards Division (CG–5222), Coast Guard; telephone 202–372–1414, e-mail *James.M.Magill@uscg.mil.* If you have questions on viewing or submitting material to the docket, call Ms. Renee V. Wright, Program Manager, Docket Operations, telephone 202–366–9826.

SUPPLEMENTARY INFORMATION:

Table of Contents for Preamble

I. Public Participation and Request for Comments
  A. Submitting Comments
  B. Viewing Comments and Documents
  C. Privacy Act
  D. Public Meeting
II. Abbreviations
III. Background
IV. Discussion of Proposed Rule
V. Regulatory Analyses
  A. Regulatory Planning and Review
  B. Small Entities
  C. Assistance for Small Entities
  D. Collection of Information
  E. Federalism
  F. Unfunded Mandates Reform Act
  G. Taking of Private Property
  H. Civil Justice Reform
  I. Protection of Children
  J. Indian Tribal Governments
  K. Energy Effects
  L. Technical Standards
  M. Environment

I. Public Participation and Request for Comments

We encourage you to participate in this rulemaking by submitting comments and related materials. All comments received will be posted, without change, to *http://www.regulations.gov* and will include any personal information you have provided.

A. Submitting Comments

If you submit a comment, please include the docket number for this rulemaking (USCG–2008–1088), indicate the specific section of this document to which each comment applies, and provide a reason for each suggestion or recommendation. You may submit your comments and material online or by fax, mail, or hand delivery, but please use only one of these means. We recommend that you include your name and a mailing address, an e-mail address, or a phone number in the body of your document so that we can contact you if we have questions regarding your submission.

To submit your comments online, go to *http://www.regulations.gov*, select the

Advanced Docket Search option on the right side of the screen, insert ''USCG–2008–1088'' in the Docket ID box, press Enter, and then click on the balloon shape in the Actions column. If you submit your comments by mail or hand delivery, submit them in an unbound format, no larger than 8½ by 11 inches, suitable for copying and electronic filing. If you submit them by mail and would like to know that they reached the Facility, please enclose a stamped, self-addressed postcard or envelope.

We will consider all comments and material received during the comment period and may change this proposed rule based on your comments.

B. Viewing Comments and Documents

To view comments, as well as documents mentioned in this preamble as being available in the docket, go to *http://www.regulations.gov*, select the Advanced Docket Search option on the right side of the screen, insert USCG–2008–1088 in the Docket ID box, press Enter, and then click on the item in the Docket ID column. If you do not have access to the internet, you may view the docket online by visiting the Docket Management Facility in Room W12–140 on the ground floor of the Department of Transportation West Building, 1200 New Jersey Avenue, SE., Washington, DC 20590, between 9 a.m. and 5 p.m., Monday through Friday, except Federal holidays. We have an agreement with the Department of Transportation to use the Docket Management Facility.

C. Privacy Act

Anyone can search the electronic form of all comments received into any of our dockets by the name of the individual submitting the comment (or signing the comment, if submitted on behalf of an association, business, labor union, etc.). You may review a Privacy Act notice regarding our public dockets in the January 17, 2008 issue of the **Federal Register** (73 FR 3316).

D. Public Meeting

We do not now plan to hold a public meeting. But you may submit a request for one to the docket using one of the methods specified under **ADDRESSES**. In your request, explain why you believe a public meeting would be beneficial. If we determine that one would aid this rulemaking, we will hold one at a time and place announced by a later notice in the **Federal Register.**

II. Abbreviations

DHS Department of Homeland Security
FR Federal Register
ISM International Safety Management
ISSC International Ship Security Certificate
MMS Minerals Management Service
MODU Mobile Offshore Drilling Unit
NAICS North American Industry Classification System
NOA Notice of Arrival
NOA OCS Notice of Arrival on the Outer Continental Shelf
NPRM Notice of Proposed Rulemaking
NTTAA National Technology Transfer and Advancement Act, 15 U.S.C. 272 note
NVMC National Vessel Movement Center
OCS Outer Continental Shelf
OIRA Office of Information and Regulatory Affairs
OMB Office of Management and Budget
RFA Regulatory Flexibility Act, 5 U.S.C. 601–612
SAFE Port Act Security and Accountability For Every Port Act of 2006, Pub. L. No. 109–347, 120 Stat. 1884 (2006)
U.S.C. United States Code
U.S.C.A. United States Code Annotated

III. Background

Congress and the President enacted the Security and Accountability for Every Port Act of 2006 (SAFE Port Act), Public Law No. 109–347, 120 Stat. 1884 on October 13, 2006. Section 109 of the SAFE Port Act [1] requires publication, within 180 days of enactment, of regulations that ''update and finalize'' notice of arrival (NOA) procedures for foreign vessels [2] on the Outer Continental Shelf (OCS). Additionally, the SAFE Port Act requires that the regulations ''be consistent with information required under the Notice of Arrival section 160.206 of title 33, Code of Federal Regulations as in effect of the date of enactment of the Act.''

SAFE Port Act Section 109

The legislative history for the SAFE Port Act relating to the ''update and finalize'' language found in section 109 provides no specific direction for implementing that section. The Senate version of the bill contains the section 109 provisions and the House of Representatives bill does not. The Congressional record does not otherwise elucidate the requirement. The House of Representatives Conference Report reveals only that both houses of Congress adopted section 109 without additional discussion.[3]

Other Coast Guard NOA OCS Regulations, 33 CFR 146.202

The Coast Guard does, however, have existing OCS regulations to inform this proposed rule. On March 4, 1982, in response to enactment of the Outer Continental Shelf Lands Act Amendments of 1978, the Coast Guard published a final rule entitled Outer Continental Shelf Activities (47 FR 9366). The rule impacted requirements for design, equipment, operations, manning, inspections and investigations for facilities, vessels, and other units (domestic and foreign) engaged in OCS activities. The rule is intended to ensure that foreign mobile offshore drilling units operating on the OCS meet the manning and safety standards comparable to those met by U.S. units. One provision, 33 CFR 146.202, made effective by the 1982 final rule, specifically addresses NOA or relocation of any MODU on the OCS. That section provides that an owner of any MODU engaged in OCS activities shall, 14 days before arrival of the MODU on the OCS or as soon thereafter as practicable, notify the District Commander for the area in which the MODU will operate of: (1) The MODU's name, nationality, and designation assigned for identification under 30 CFR 250.37; (2) the location and year that the MODU was built; (3) the name and address of the owner, and the owner's local representative, if any; (4) classification or inspection certificates currently held by the MODU; (5) the location and date that operations are expected to commence, and their anticipated duration; and (6) the location and date that the MODU will be available and ready for inspection by the Coast Guard. In addition, once a MODU is located on the OCS, the owner of the unit shall notify the District Commander before relocating the unit. Section 146.202 is the only Coast Guard NOA requirement for foreign vessels (specifically MODUs) on the OCS effective at this time, and its purpose is to assist District Commanders in gathering information on MODUs prior to inspection of those units.

Consistency With 33 CFR 160.206

The Coast Guard also has recently updated NOA rules. In response to the terrorist attacks of September 11, 2001, the Coast Guard published, on February 28, 2003, the final rule entitled

[1] 33 U.S.C. 1223 note (West 2009).

[2] As defined in 1 U.S.C. 3 (and reiterated in part 140 of this subchapter) a vessel is ''every description of watercraft or other artificial contrivance used, or capable of being used, as a means of transportation on water.'' This definition includes those units we propose to regulate with this rulemaking (i.e., floating facilities, MODUs, and vessels engaging in OCS activities).

[3] H.R. 4954, 152nd Cong. (2006).

Notification of Arrival in U.S. Ports (68 FR 9537). The rule enhanced notification of arrival and departure requirements for U.S. and foreign vessels bound for, or departing from, ports or places in the United States. The rule also increased, from 24 hours to 96 hours, the advance notice a vessel must submit to the National Vessel Movement Center (NVMC); described the timeframes for updating an NOA; and added more information to the list of items that must be submitted, as part of the NOA, to the NVMC. Pursuant to that rule, specifically 33 CFR 160.206, the information items submitted to the NVMC include: Vessel information; voyage information; cargo information; information for each crewmember onboard; information for each person onboard in addition to the crew; operational condition of equipment; International Safety Management (ISM) code notice; Cargo Declaration; and International Ship and Port Facility code (ISPS) notice. The Coast Guard collects this information to ensure, to the extent practicable, public safety, security and the uninterrupted flow of commerce.

Coast Guard Action

After considering the legislative history related to SAFE Port Act section 109 and current NOA rules, the Coast Guard has determined that pursuant to section 109 of the SAFE Port Act, ''updating and finalizing'' our current NOA OCS rules requires proposing and finalizing NOA OCS rules, which will be: (1) In addition to those found at § 146.202 for MODUs, and (2) consistent with the NOA requirements of § 160.206 for vessels bound for, or departing from, ports or places in the United States.

This rulemaking begins the process of meeting those section 109 requirements. It also proposes extending those NOA OCS requirements to U.S. floating facilities, MODUs, and vessels (arriving on, and engaging in, OCS activities from foreign ports or places) under the authority of the Outer Continental Shelf Lands Act, 43 U.S.C. 1356 (2007) and the Ports and Waterways Safety Act, 33 U.S.C. 1226 (2007). Extending the NOA OCS requirements to U.S. vessels is essential for overall maritime domain safety and security awareness. Moreover, obtaining knowledge of all individuals and vessels engaging in OCS activities will better equip the Coast Guard to prevent and respond to a safety or security incident on the OCS.

IV. Discussion of Proposed Rule

The Coast Guard is the lead Federal agency for maritime safety and security on the OCS, and is concerned with the safe operation and manning of vessels engaged in OCS activities. As such, the Coast Guard remains focused on monitoring the safe operation of vessels entering the United States OCS, and on protecting the United States from vessels that could be used as weapons, or as a point of entry in attacks against the United States. Consistent with these concerns and the mandates of the SAFE Port Act, this rulemaking proposes new NOA requirements for certain floating facilities, MODUs, and vessels engaging in OCS activities as a method of increasing U.S. maritime domain safety and security awareness. These amendments will assist the Coast Guard in responding to an OCS incident and enhance public safety, security, and the uninterrupted flow of commerce.

Consistent with 33 CFR part 160, subpart C, this rulemaking specifically proposes that owners or operators of U.S. and foreign flag floating facilities, MODUs, and vessels engaging in OCS activities, with the exception of those U.S. units traveling directly from U.S. ports or places, notify the NMVC at least 96 hours before their intended arrival on the OCS. If voyage time to the OCS is less than 96 hours, then this rulemaking proposes shorter notice requirements. U.S. flag units arriving on the OCS directly from a U.S. port or place will not be required to submit the safety and security information proposed in this rule because the Coast Guard has greater maritime domain awareness over these vessels coming from a U.S. port (as they will have previously submitted similar safety and security information items under 33 CFR 160.202(a) and 160.206, unless exempted under § 160.203), and as such they represent a comparatively lower safety and security risk.

Proposed §§ 146.103, 146.104, 146.215, and 146.405

In accordance with section 109 of the SAFE Port Act, the Coast Guard proposes that the information items submitted for purposes of NOA OCS by owners or operators of floating facilities, MODUs, and vessels engaging in OCS activities be consistent, to the extent practicable, with information currently submitted under 33 CFR 160.206 for U.S. and foreign vessels bound for, or departing from, ports or places in the United States.

NOA for U.S. and Foreign Facilities and MODUs

Specifically, in §§ 146.103, 146.104, and 146.215 for U.S. and foreign floating facilities and MODUs, we propose:

When and How To Submit the NOA

If the voyage time to the OCS is 96 hours or greater, we propose that the owner or operator planning to conduct OCS activities submit an initial NOA to the NVMC not less than 96 hours in advance of their arrival on the OCS. If the voyage time is less than 96 hours, we propose that the owner or operator planning to conduct OCS activities submit an initial NOA to the NVMC not less than 24 hours in advance of their arrival on the OCS.

We propose that the owner or operator electronically submit the NOA to the NVMC at *http://www.nvmc.uscg.gov/* by clicking on the link labeled ''Submit NOA online'' and following the instructions for submission.

Information Items Submitted to NVMC

The Coast Guard proposes that the NOA submission include the following information: The location of the floating facility or MODU at the time the NOA is reported; the area designation and block number where the unit will operate, if applicable; the floating facility's name, if any; the date when OCS activities are expected to begin and end; the names of the last two ports or places visited and the associated dates of arrival and departure; select information for each individual onboard the floating facility or MODU; the date of issuance of the International Safety Management Certificate; and the date of issuance of the International Ship Security Certificate.

Updating an NOA

There may be instances where the owner or operator becomes aware that the floating facility or MODU will not arrive on the OCS within the timeframe originally reported to the NVMC. In those instances, we propose that the owner or operator update the NOA by revising and re-submitting the NOA. If the new estimated time of arrival on the OCS differs by more than 24 hours from the initial or most recently submitted NOA, then we propose that the owner or operator submit a revised NOA not less than 24 hours before the floating facility or MODU arrives at their destination on the OCS. If the new estimated time of arrival on the OCS differs by less than 24 hours from the initial or most recently submitted NOA, then we propose that the owner or operator of the floating facility or MODU submit an updated NOA not less than 12 hours before arrival on the OCS.

We propose that owners and operators refrain from submitting updated NOAs for changes in arrival times that are less

than 6 hours; changes in the location of the vessel or floating facility at the time of reporting; and changes in personnel positions.

NOA for U.S. and Foreign Vessels

For consistency, in proposed § 146.405, NOA for U.S. and foreign vessels engaging in OCS activities, we have directly referenced 33 CFR Table 160.206 as the proposed information to be submitted by the vessel owner or operator. We propose that each item listed in the table be submitted with the exception of item (2)(iii), voyage information for each port or place in the United States to be visited, and item (6), the state and operational condition of equipment as required by § 164.35. Each vessel should have access to the remaining information items found in the table, because those items are the same as that which is currently required from U.S. and foreign vessels bound for, or departing from, ports or places in the United States.

We propose that the method and timeframes for submission of the NOA to the NVMC be consistent with those proposed for floating facilities and MODUs.

Towing Vessels on the OCS

In each of the preceding sections, we propose that owners and operators of towing vessels controlling a unit (*i.e.,* floating facility, MODU, or other vessel), or units, required to submit a NOA under this subpart submit only one combined NOA containing the information required for the towing vessel and each unit under its control.

Specifically, the combined NOA would include the information items required for vessels under proposed § 146.405 (for vessels) as well as those information items required for floating facilities under §§ 146.103 or 146.104, or those required for MODUs under § 146.215, as appropriate. Towing vessels with a vessel in tow will submit the NOA information items found in § 146.405 for both vessels.

V. Regulatory Analyses

We developed this proposed rule after considering numerous statutes and executive orders related to rulemaking. Below we provide analyses based on 13 of these statutes or executive orders.

A. Regulatory Planning and Review

This proposed rule is not a significant regulatory action under section 3(f) of Executive Order 12866, Regulatory Planning and Review, and does not require an assessment of potential costs and benefits under section 6(a)(3) of that Order. The Office of Management and Budget has not reviewed it under that Order.

The Coast Guard proposes this rulemaking as a method of enhancing maritime safety and security and meeting the Congressional mandates of the SAFE Port Act. This rulemaking would require certain U.S. and foreign owners or operators of floating facilities, MODUs, and vessels to submit NOA information to the NVMC prior to engaging in OCS activities. Details on the purpose, background, and proposed requirements of this rulemaking are summarized elsewhere in this NPRM.

Based on industry information from the National Offshore Advisory Committee (NOSAC), we estimate that there are 7 to 12 arrivals on the OCS each month for a total of 84 to 144 annual arrivals on the OCS each year. We also estimate that approximately 95 percent of the OCS units affected under this rulemaking would be foreign flag.

The additional costs of this rulemaking to industry are the proposed NOA reporting requirements. We estimate that one NOA requires 30 minutes to complete plus a transmittal fee of $2 per submission.[4] Similar to other NOA reporting analyses, we use an average loaded wage rate of approximately $31 per hour to estimate the labor costs for NOA reporting activities.

Based on the arrival data and the reporting time and cost information, we estimate the annual cost of this rulemaking to be $1,470 to $2,520 (non-discounted). We estimate the present value 10-year cost of this rulemaking to be $10,300 to $17,700 at a 7 percent discount rate (rounded).[5]

We expect the primary benefit of this rulemaking would be enhanced maritime domain awareness. This rule would provide assurance that OCS units communicate the necessary information to the Coast Guard. We also expect the proposed NOA requirements would provide the Coast Guard additional information and detail on the volume and type of traffic on the OCS.

B. Small Entities

Under the Regulatory Flexibility Act (RFA; 5 U.S.C. 601–612), we have considered whether this proposed rule would have a significant economic impact on a substantial number of small entities. The term ''small entities'' comprises small businesses, not-for-profit organizations that are independently owned and operated and are not dominant in their fields, and governmental jurisdictions with populations of less than 50,000.

The Coast Guard expects that the proposed rule will not have a significant economic impact on a substantial number of small entities.

We estimate most affected owners and operators would be classified under one of the following North American Industry Classification System (NAICS) 6-digit codes: 211111—Crude Petroleum and Natural Gas Extraction, 336611—Ship Building and Repairing, or 333132—Oil and Gas Field Machinery and Equipment Manufacturing. According to the Small Business Administration (SBA) size standards, a company with NAICS code 211111 or 333132 employing less than 500 employees or NAICS code 336611 employing less than 1,000 employees is considered a small entity.

As discussed elsewhere in this NPRM, we estimate that approximately 95 percent of the affected OCS units under this rulemaking are foreign owned. The RFA clarifies that a small business is an entity organized for profit, with a place of business located in the United States, and that operates primarily within the United States or that makes a significant contribution to the U.S. economy through payment of taxes or use of American products, materials or labor. We anticipate the majority of affected entities are not located within the United States nor do they make a significant contribution through payment of U.S. taxes.

We expect the proposed rule would not have a significant economic impact on any entities since the costs of this rulemaking are small and the cost burden per NOA submission is only about $18.

We also investigated other types of data sources and information that would be useful to estimate the impacts of this rulemaking on small entities. For example, MODU units that operate on the OCS are capital intensive and have high day rates. The average day rate of floating rigs operating on the OCS may exceed $250,000.[6] For expository purposes, we analyzed the annual cost-revenue impacts of this rulemaking on owners and operators of MODUs that have a Coast Guard Certificate of Compliance. Based on this information, we estimated that the small annual reporting cost of this rulemaking would

[4] Estimated sources: (1) Collection of Information, OMB Control Number 1625–0100, ''Advance Notice of Arrival and Electronic Transmission of Vessel Transit Data''; and (2) Notice of Proposed Rulemaking, ''Vessel Requirements for Notices of Arrival and Departure, and Automatic Identification System'' [USCG–2005–21869].

[5] We estimate present value 10-year costs are $12,500 to $21,500 at a three percent discount rate (rounded).

[6] Source: *http://www.rigzone.com/data/dayrates/* (2008).

have no significant economic impact on the annual revenues of these owners and operators.

Therefore, the Coast Guard certifies under 5 U.S.C. 605(b) that this proposed rule would not have a significant economic impact on a substantial number of small entities. If you think that your business, organization, or governmental jurisdiction qualifies as a small entity and that this rulemaking would have a significant economic impact on it, please submit a comment to the Docket Management Facility at the address under **ADDRESSES**. In your comment, explain why you think it qualifies and how and to what degree this rulemaking would economically affect it.

C. Assistance for Small Entities

Under section 213(a) of the Small Business Regulatory Enforcement Fairness Act of 1996 (Pub. L. 104–121), we want to assist small entities in understanding this proposed rule so that they can better evaluate its effects on them and participate in the rulemaking. If the proposed rule would affect your small business, organization, or governmental jurisdiction and you have questions concerning its provisions or options for compliance, please consult Mr. James M. Magill, Vessel and Facility Operating Standards Division (CG–5222), telephone 202–372–1414. The Coast Guard will not retaliate against small entities that question or complain about this rule or any policy or action of the Coast Guard.

Small businesses may send comments on the actions of Federal employees who enforce, or otherwise determine compliance with, Federal regulations to the Small Business and Agriculture Regulatory Enforcement Ombudsman and the Regional Small Business Regulatory Fairness Boards. The Ombudsman evaluates these actions annually and rates each agency's responsiveness to small business. If you wish to comment on actions by employees of the Coast Guard, call 1–888–REG–FAIR (1–888–734–3247).

D. Collection of Information

This proposed rule would call for a collection of information under the Paperwork Reduction Act of 1995 (44 U.S.C. 3501–3520). It would require a revision to an existing collection. The following is a summary of the burden associated with the revision.

As defined in 5 CFR 1320.3(c), ''collection of information'' comprises reporting, recordkeeping, monitoring, posting, labeling, and other, similar actions. The title and description of the information collection, a description of those who must collect the information, and an estimate of the total annual burden follow. The estimate covers the time for reviewing instructions, searching existing sources of data, gathering and maintaining the data needed, and completing and reviewing the collection.

This proposed rule would amend the collection of information requirements for vessel owners and operators. The rule would require modifying the burden in the previously approved collection under OMB Control Number 1625–0100.

Title: Advance Notice of Arrival and Electronic Transmission of Vessel Transit Data.

OMB Control Number: 1625–0100.

Summary of the Collection of Information: The proposed rule would require vessel owners and operators to submit an advance notice of arrival electronically to the NVMC. This requirement would require a change in the previously approved OMB Collection 1625–0100 because it expands the NOA requirement to include units engaging in OCS activities.

Proposed Use of Information: The Coast Guard would use the information to enhance maritime domain awareness.

Description of the Respondents: The respondents are vessel owners and operators who arrive on the OCS from foreign ports and engage in OCS activities.

Number of Respondents: The proposed rule would increase the number of respondents in this OMB-approved collection by no more than 144 respondents. See the ''Regulatory Planning and Review'' section for more details on the respondents affected by this proposed rule.

Frequency of Response: The proposed rule would increase the annual number of responses in this OMB-approved collection by no more than 144 responses. OCS units such as MODUs and floating production facilities may stay on the OCS for long periods, such as a year or more, so we do not expect these units to have more than one NOA submittal per year.

Burden of Response: We estimate the burden of this proposed rule to be the preparation and submission of the NOA. Based on discussion in the ''Regulatory Analysis'' section of this NPRM, we estimate that it would take 30 minutes to prepare and submit an NOA to the NVMC.

Estimate of Total Annual Burden: The annual total burden of this proposed rule would be no more than 72 hours.

As required by the Paperwork Reduction Act of 1995 (44 U.S.C. 3507(d)), we will submit a copy of this proposed rule to the Office of Management and Budget (OMB) for review of the collection of information.

We ask for public comment on the proposed collection of information to help us determine how useful the information is; whether it can help us perform our functions better; whether it is readily available elsewhere; how accurate our estimate of the burden of collection is; how valid our methods for determining burden are; how we can improve the quality, usefulness, and clarity of the information; and how we can minimize the burden of collection.

If you submit comments on the collection of information, submit them both to OMB and to the Docket Management Facility where indicated under **ADDRESSES**, by the date under **DATES**.

You need not respond to a collection of information unless it displays a currently valid control number from OMB. Before the Coast Guard could enforce the collection of information requirements in this proposed rule, OMB would need to approve the Coast Guard's request to collect this information.

E. Federalism

A rule has implications for federalism under Executive Order 13132, Federalism, if it has a substantial direct effect on State or local governments and would either preempt State law or impose a substantial direct cost of compliance on them. We have analyzed this proposed rule under that Order and have determined that it does not have implications for federalism.

F. Unfunded Mandates Reform Act

The Unfunded Mandates Reform Act of 1995 (2 U.S.C. 1531–1538) requires Federal agencies to assess the effects of their discretionary regulatory actions. In particular, the Act addresses actions that may result in the expenditure by a State, local, or tribal government, in the aggregate, or by the private sector of $100,000,000 or more in any one year. Though this proposed rule would not result in such an expenditure, we do discuss the effects of this rule elsewhere in this preamble.

G. Taking of Private Property

This proposed rule would not effect a taking of private property or otherwise have taking implications under Executive Order 12630, Governmental Actions and Interference with Constitutionally Protected Property Rights.

H. Civil Justice Reform

This proposed rule meets applicable standards in sections 3(a) and 3(b)(2) of Executive Order 12988, Civil Justice Reform, to minimize litigation, eliminate ambiguity, and reduce burden.

I. Protection of Children

We have analyzed this proposed rule under Executive Order 13045, Protection of Children from Environmental Health Risks and Safety Risks. This rule is not an economically significant rule and would not create an environmental risk to health or risk to safety that might disproportionately affect children.

J. Indian Tribal Governments

This proposed rule does not have tribal implications under Executive Order 13175, Consultation and Coordination with Indian Tribal Governments, because it would not have a substantial direct effect on one or more Indian tribes, on the relationship between the Federal Government and Indian tribes, or on the distribution of power and responsibilities between the Federal Government and Indian tribes.

K. Energy Effects

We have analyzed this proposed rule under Executive Order 13211, Actions Concerning Regulations That Significantly Affect Energy Supply, Distribution, or Use. We have determined that it is not a ''significant energy action'' under that order because it is not a ''significant regulatory action'' under Executive Order 12866 and is not likely to have a significant adverse effect on the supply, distribution, or use of energy.

L. Technical Standards

The National Technology Transfer and Advancement Act (NTTAA) (15 U.S.C. 272 note) directs agencies to use voluntary consensus standards in their regulatory activities unless the agency provides Congress, through the Office of Management and Budget, with an explanation of why using these standards would be inconsistent with applicable law or otherwise impractical. Voluntary consensus standards are technical standards (*e.g.,* specifications of materials, performance, design, or operation; test methods; sampling procedures; and related management systems practices) that are developed or adopted by voluntary consensus standards bodies.

This proposed rule does not use technical standards. Therefore, we did not consider the use of voluntary consensus standards.

If you disagree with our analysis of the voluntary consensus standards listed above or are aware of voluntary consensus standards that might apply but are not listed, send a comment to the docket using one of the methods under **ADDRESSES**. In your comment, please explain why you disagree with our analysis and/or identify voluntary consensus standards we have not listed that might apply.

M. Environment

We have analyzed this proposed rule under Department of Homeland Security Directive 023–01 and Commandant Instruction M16475.lD, which guide the Coast Guard in complying with the National Environmental Policy Act of 1969 (NEPA) (42 U.S.C. 4321–4370f), and have made a preliminary determination that this action is one of a category of actions which do not individually or cumulatively have a significant effect on the human environment. Therefore, this rule is categorically excluded, under section 2.B.2. Figure 2–1, paragraphs 34(a) and (d), of the Instruction and neither an environmental assessment nor an environmental impact statement is required. This proposed rule requires neither an environmental assessment nor an environmental impact statement because it merely outlines the procedures that owners or operators of floating facilities, mobile offshore drilling units, and vessels will follow in submitting notice of arrival information to the Coast Guard's National Vessel Movement Center. A preliminary ''Environmental Analysis Check List'' supporting this determination is available in the docket where indicated under the ''Public Participation and Request for Comments'' section of this preamble. We seek any comments or information that may lead to discovery of a significant environmental impact from this proposed rule.

List of Subjects for 33 CFR Part 146

Continental shelf, Marine safety, Occupational health and safety, Reporting and recordkeeping requirements, Vessels.

For the reasons discussed in the preamble, the Coast Guard proposes to amend 33 CFR part 146, as follows:

PART 146—OPERATIONS

1. The authority citation for part 146 is revised to read as follows:

Authority: 33 U.S.C. 1223,1226; 43 U.S.C. 1333, 1348, 1350, 1356; Sec. 109, Pub. L. No. 109–347, 120 Stat. 1884; Department of Homeland Security Delegation No. 0170.1.

2. Add § 146.103 to read as follows:

§ 146.103 Safety and Security notice of arrival for U.S. floating facilities.

(a) *General.* At least 96 hours before a U.S. floating facility arrives on the OCS, excluding those U.S. floating facilities arriving directly from a U.S. port or place to engage in OCS activities, the owner or operator of the floating facility, except as provided in paragraph (f) of this section, must submit the following information to the National Vessel Movement Center (NVMC):

(1) The location, latitude and longitude, of the floating facility at the time the notice of arrival (NOA) is reported;

(2) The area designation and block number or lease number, assigned under 30 CFR 250.154 for identification, where the floating facility plans to perform OCS activities;

(3) The floating facility's name, if any;

(4) The date when OCS operations of the floating facility are expected to begin and end;

(5) Names of the last two ports or places visited and the associated dates of arrival and departure;

(6) The following information for each individual onboard:

(i) Full name;

(ii) Date of birth;

(iii) Nationality;

(iv) Passport number or marine documentation number (type of identification and number);

(v) Position or duties on the floating facility; and

(vi) Name of the port, or place, and country where the individual embarked.

(7) The date of issuance of the floating facility's International Safety Management Certificate (ISM), if any, and Document of Compliance certificate and the name of the flag administration, or its recognized representative, that issued those certificates; and

(8) The date of issuance of the floating facility's International Ship Security Certificate (ISSC), if any, and the name of the flag administration, or the recognized security organization representing the flag administration, that issued the ISSC.

(b) *Methods of submission.* The notice must be submitted to the NVMC by electronic Notice of Arrival and Departure format using methods specified in the NVMC's Web site at *http://www.nvmc.uscg.gov/.*

(c) *Updates to a submitted NOA.* Unless otherwise specified in this section, whenever the most recently submitted NOA information becomes inaccurate, the owner or operator of a U.S. floating facility must revise and re-submit the NOA within the times required in paragraph (e) of this section. An owner or operator does not need to

revise or re-submit an NOA for the following:

(1) A change in submitted arrival time that is less than 6 hours;

(2) Changes in the location, latitude and longitude, of the floating facility at the time the NOA is reported; or

(3) Changes to personnel positions or duties on the floating facility.

(d) *Required reporting time of an initial NOA.* The owner or operator of a U.S. floating facility subject to this section must submit an initial NOA:

(1) If the voyage time is more than 96 hours, owners or operators of a floating facility must submit an initial NOA at least 96 hours before the U.S. floating facility arrives at the OCS location where it plans to perform OCS activities; or

(2) If the voyage time is less than 96 hours, owners and operators of a floating facility must submit an initial NOA at least 24 hours before the U.S. floating facility arrives at the OCS location where it plans to perform OCS activities.

(e) *Required reporting time of an update to an NOA.* Each floating facility subject to this section must submit an NOA update:

(1) If the most recently submitted NOA, or NOA update, differs by 24 hours or more from the current estimated time of arrival, the owner or operator of the floating facility must provide an updated NOA as soon as practicable but at least 24 hours before the U.S. floating facility arrives at the OCS location where it plans to perform OCS activities; or

(2) If the most recently submitted NOA, or NOA update, differs by less than 24 hours from the current estimated time of arrival, the owner or operator of the floating facility must provide an update as soon as practicable but at least 12 hours before the U.S. floating facility arrives at the OCS location where it plans to perform OCS activities.

(f) *Towing vessels.* When a towing vessel controls a U.S. floating facility required to submit an NOA under this subpart, the owner or operator of the towing vessel is responsible for submitting only one NOA containing the NOA information items required for the towing vessel, under § 146.405, and the U.S. floating facility under paragraph (a) of this section.

(g) This section does not apply to U.S. floating facilities merely transiting the waters superjacent to the OCS and not engaged in OCS activities.

3. Add § 146.104 to read as follows:

§ 146.104 Safety and Security notice of arrival for foreign floating facilities.

(a) *General.* At least 96 hours before a foreign floating facility arrives on the OCS to engage in OCS activities, the owner or operator of the floating facility, except as provided in paragraph (f) of this section, must submit the following information to the National Vessel Movement Center (NVMC):

(1) The location, latitude and longitude, of the foreign floating facility at the time the NOA is reported;

(2) The area designation and block number or lease number, assigned under 30 CFR 250.154 for identification, where the foreign floating facility plans to perform OCS activities;

(3) The foreign floating facility's name, if any;

(4) The date when OCS operations of the foreign floating facility are expected to begin and end;

(5) Names of the last two ports or places visited and the associated dates of arrival and departure;

(6) The following information for each individual onboard:

(i) Full name;

(ii) Date of birth;

(iii) Nationality;

(iv) Passport number or marine documentation number (type of identification and number);

(v) Position or duties on the foreign floating facility; and

(vi) Name of the port, or place, and country where the individual embarked.

(7) The date of issuance of the foreign floating facility's International Safety Management Certificate (ISM), if any, and Document of Compliance certificate and the name of the flag administration, or its recognized representative, that issued those certificates; and

(8) The date of issuance of the foreign floating facility's International Ship Security Certificate (ISSC), if any, and the name of the flag administration, or the recognized security organization representing the flag administration, that issued the ISSC.

(b) *Methods of submission.* The notice must be submitted to the National Vessel Movement Center (NVMC) by electronic Notice of Arrival and Departure format using methods specified at the NVMC's Web site at *http://www.nvmc.uscg.gov/.*

(c) *Updates to a submitted NOA.* Unless otherwise specified in this section, whenever the most recently submitted NOA information becomes inaccurate, the owner or operator of the foreign floating facility must revise and re-submit the NOA within the times required in paragraph (e) of this section. An owner or operator does not need to revise or re-submit an NOA for the following:

(1) A change in submitted arrival time that is less than 6 hours;

(2) Changes in the location, latitude and longitude, of the foreign floating facility at the time the NOA is reported; or

(3) Changes to personnel positions or duties on the foreign floating facility.

(d) *Required reporting time of an initial NOA.* The owner or operator of a foreign floating facility subject to this section must submit an initial NOA:

(1) If the voyage time is more than 96 hours, owners or operators of a foreign floating facility must submit an initial NOA at least 96 hours before the foreign floating facility arrives at the OCS location where it plans to perform OCS activities; or

(2) If the voyage time is less than 96 hours, owners or operators of a foreign floating facility must submit an initial NOA at least 24 hours before the foreign floating facility arrives at the OCS location where it plans to perform OCS activities.

(e) *Required reporting time of an update to an NOA.* The owner or operator of a foreign floating facility subject to this section must submit an NOA update:

(1) If the most recently submitted NOA, or NOA update, differs by 24 hours or more from the current estimated time of arrival, the owner or operator of the foreign floating facility must provide an updated NOA as soon as practicable but at least 24 hours before the floating facility arrives at the OCS location where it plans to perform OCS activities; or

(2) If the most recently submitted NOA, or NOA update, differs by less than 24 hours from the current estimated time of arrival, the owner or operator of the foreign floating facility must provide an updated NOA as soon as practicable but at least 12 hours before the floating facility arrives at the OCS location where it plans to perform OCS activities.

(f) *Towing vessels.* When a towing vessel controls a foreign floating facility required to submit an NOA under this subpart, the owner or operator of the towing vessel is responsible for submitting only one NOA containing the NOA information items required for the towing vessel, under § 146.405, and the foreign floating facility under paragraph (a) of this section.

(g) This section does not apply to a foreign floating facility merely transiting the waters superjacent to the OCS and not engaged in OCS activities.

4. Add § 146.215 to read as follows:

§ 146.215 Safety and Security notice of arrival for U.S. or Foreign MODUs.

(a) *General.* At least 96 hours before a MODU arrives on the OCS to engage in OCS activities, excluding those U.S. MODUs arriving directly from a U.S. port or place, to engage in OCS activities, the owner or operator of the MODU, except as provided in paragraph (f) of this section, must submit the following information to the National Vessel Movement Center (NVMC):

(1) The location, latitude and longitude, of the MODU at the time the notice of arrival (NOA) is reported;

(2) The area designation and block number or lease number, assigned under 30 CFR 250.154 for identification, where the MODU plans to perform OCS activities;

(3) The MODU's name, if any;

(4) The date when operations of the MODU are expected to begin and end;

(5) Names of the last two ports or places visited and the associated dates of arrival and departure;

(6) The following information for each individual onboard:

(i) Full name;

(ii) Date of birth;

(iii) Nationality;

(iv) Passport number or marine documentation number (type of identification and number);

(v) Position or duties on the MODU; and

(vi) Name of the port, or place, and country where the individual embarked.

(7) The date of issuance of the MODU's International Safety Management Certificate (ISM), if any, and Document of Compliance certificate and the name of the flag administration, or its recognized representative, that issued those certificates; and

(8) The date of issuance of the MODU's International Ship Security Certificate (ISSC), if any, and the name of the flag administration, or the recognized security organization representing the flag administration, that issued the ISSC.

(b) *Methods of submission.* The notice must be submitted to the National Vessel Movement Center (NVMC) by electronic Notice of Arrival and Departure format using methods specified in the NVMC's Web site at *http://www.nvmc.uscg.gov/.*

(c) *Updates to a submitted NOA.* Unless otherwise specified in this section, whenever the most recently submitted NOA information becomes inaccurate, the owner or operator of the MODU must revise and re-submit the NOA within the times required in paragraph (e) of this section. An owner or operator does not need to revise or re-submit an NOA for the following:

(1) A change in submitted arrival time that is less than 6 hours;

(2) Changes in the location, latitude or longitude, of the MODU at the time the NOA is reported; or

(3) Changes to personnel positions or duties on the MODU.

(d) *Required reporting time of an initial NOA.* The owner or operator of a MODU subject to this section must submit an initial NOA:

(1) If the voyage time is more than 96 hours, owners and operators of a MODU must submit an initial NOA at least 96 hours before the MODU arrives at the OCS location where it plans to perform OCS activities; or

(2) If the voyage time is less than 96 hours, owners and operators of a MODU must submit an initial NOA at least 24 hours before the MODU arrives at the OCS location where it plans to perform OCS activities.

(e) *Required reporting time of an update to an NOA.* The owner or operator of a MODU subject to this section must submit an NOA update:

(1) If the most recently submitted NOA, or NOA update, differs by 24 hours or more from the current estimated time of arrival, the owner or operator of the MODU must provide an updated NOA as soon as practicable but at least 24 hours before the MODU arrives at the OCS location where it plans to perform OCS activities; or

(2) If the most recently submitted NOA, or NOA update, differs by less than 24 hours from the current estimated time of arrival, the owner or operator of the MODU must provide an updated NOA as soon as practicable but at least 12 hours before the MODU arrives at the OCS location where it plans to perform OCS activities.

(f) When a towing vessel controls a MODU required to submit an NOA under this subpart, the owner or operator of the towing vessel is responsible for submitting only one NOA containing the information required for the towing vessel, under § 146.405, and the MODU under paragraph (a) of this section.

(g) This section does not apply to MODU's merely transiting the waters superjacent to the OCS and not engaged in OCS activities.

5. Revise the heading in Subpart D to read as follows:

Subpart D—Vessels—Notice of Casualty

6. Add Subpart E to read as follows:

Subpart E—Vessels—Safety and Security Notice of Arrival

§ 146.401 Applicability.

This subpart applies to all U.S. and foreign vessels, except those U.S. vessels traveling directly from a U.S. port or place, bound for a place on the OCS and planning to engage in OCS activities. Vessels under this subpart include, but are not limited to, standby vessels, attending vessels, offshore vessels, pipelay vessels, derrick ships, diving support vessels, oceanographic research vessels, towing vessels, and accommodation vessels. This subpart does not apply to MODUs, which are covered under § 146.215.

§ 146.405 Safety and Security notice of arrival for vessels arriving at a place on the OCS.

(a) *General.* The owner or operator of each vessel subject to this section must submit an initial NOA to the National Vessel Movement Center (NVMC):

(1) If the voyage time is more than 96 hours, at least 96 hours before the vessel arrives at a place on the OCS to engage in OCS activities;

(2) If the voyage time is less than 96 hours and more than 24 hours, before departure; or

(3) If the voyage time is less than 24 hours, at least 24 hours before the vessel arrives at a place on the OCS.

(b) *Information required in an NOA.* The following information is required for vessels submitting an NOA:

(1) All the information specified in 33 CFR Table 160.206 with the exception of information required in item (2)(iii) and item (6). Vessel owners and operators should protect any personal information they gather in preparing notices for transmittal to the NVMC so as to prevent unauthorized disclosure of that information;

(2) The Minerals Management Service (MMS) area and either the name of the place, the MMS block number, or the latitude and longitude of the place on the OCS to be visited; and

(3) If any person onboard, including a crewmember, is not required to carry a passport for travel, then passport information required in Table 160.206, items (4)(iv) through (vi), and (5)(iv) through (vi), need not be provided for that person.

(c) *Updates to a submitted NOA.* Unless otherwise specified in this section, whenever the most recently submitted NOA information becomes inaccurate, the owner or operator of that vessel must revise and re-submit the NOA within the times required in paragraph (e) of this section. An owner or operator does not need to revise and re-submit an NOA for the following:

(1) A change in submitted arrival time that is less than six hours;

(2) Changes in the location, latitude and longitude, of the vessel at the time the NOA is reported; or

(3) Changes to personnel positions or duties on the vessel.

(d) *Methods of submission.* The notice must be submitted to the NVMC by electronic Notice of Arrival and Departure format using methods specified at the NVMC's Web site at *http://www.nvmc.uscg.gov/.*

(e) *Required reporting time of an NOA update.* Each vessel subject to this section must submit an NOA update:

(1) If the most recently submitted NOA, or NOA update, differs by 24 hours or more from the current estimated time of arrival, the owner or operator of the vessel must provide an update as soon as practicable but at least 24 hours before the vessel arrives at the OCS location where it plans to perform OCS activities;

(2) If the most recently submitted NOA, or NOA update, differs by less than 24 hours from the current estimated time of arrival, the owner or operator of the vessel must provide an update as soon as practicable but at least 12 hours before the vessel arrives at the OCS location where it plans to perform OCS activities; or

(3) If the remaining voyage time is less than 24 hours, the owner or operator of the vessel must provide an update as soon as practicable, but at least 12 hours before the vessel arrives at a place on the OCS.

(f) When a towing vessel controls a vessel required to submit an NOA under this subpart, the owner or operator of the towing vessel is responsible for submitting only one NOA containing the information required for the towing vessel and the vessel under its control.

(g) This section does not apply to vessels merely transiting the waters superjacent to the OCS and not engaged in OCS activities.

Dated: June 9, 2009.

J.G. Lantz,

Director of Commercial Regulations and Standards, U.S. Coast Guard.

[FR Doc. E9–14584 Filed 6–19–09; 8:45 am]

BILLING CODE P

DEPARTMENT OF HOMELAND SECURITY

Coast Guard

33 CFR Part 165

[Docket No. USCG–2009–0194]

RIN 1625–AA00

Safety Zone; IJSBA World Finals, Lower Colorado River, Lake Havasu, AZ

AGENCY: Coast Guard, DHS.

ACTION: Notice of proposed rulemaking.

SUMMARY: The Coast Guard proposes a temporary safety zone on the navigable waters of Lake Havasu on the lower Colorado River in Arizona in support of the International Jet Sports Boating Association (IJSBA) World Finals. This temporary safety zone is necessary to provide for the safety of the participants, crew, spectators, participating vessels, and other vessels and users of the waterway. Persons and vessels would be prohibited from entering into, transiting through, or anchoring within this temporary safety zone unless authorized by the Captain of the Port San Diego or his designated representative.

DATES: Comments and related material must be received by the Coast Guard on or before July 22, 2009. Requests for public meetings must be received by the Coast Guard on or before July 13, 2009.

ADDRESSES: You may submit comments identified by docket number USCG–2009–0194 using any one of the following methods:

(1) *Federal eRulemaking Portal: http://www.regulations.gov.*

(2) *Fax:* 202–493–2251.

(3) *Mail:* Docket Management Facility (M–30), U.S. Department of Transportation, West Building Ground Floor, Room W12–140, 1200 New Jersey Avenue, SE., Washington, DC 20590–0001.

(4) *Hand delivery:* Same as mail address above, between 9 a.m. and 5 p.m., Monday through Friday, except Federal holidays. The telephone number is 202–366–9329.

To avoid duplication, please use only one of these four methods. See the ''Public Participation and Request for Comments'' portion of the **SUPPLEMENTARY INFORMATION** section below for instructions on submitting comments.

FOR FURTHER INFORMATION CONTACT: If you have questions on this proposed rule, call or e-mail Petty Officer Kristen Beer, USCG, Waterways Management, U.S. Coast Guard Sector San Diego, Coast Guard; telephone 619–278–7262, e-mail *Kristen.A.Beer@uscg.mil.* If you have questions on viewing or submitting material to the docket, call Renee V. Wright, Program Manager, Docket Operations, telephone 202–366–9826.

SUPPLEMENTARY INFORMATION:

Public Participation and Request for Comments

We encourage you to participate in this rulemaking by submitting comments and related materials. All comments received will be posted without change to *http://www.regulations.gov* and will include any personal information you have provided.

Submitting Comments

If you submit a comment, please include the docket number for this rulemaking (USCG–2009–0194), indicate the specific section of this document to which each comment applies, and provide a reason for each suggestion or recommendation. You may submit your comments and material online (via *http://www.regulations.gov*) or by fax, mail, or hand delivery, but please use only one of these means. If you submit a comment online via *www.regulations.gov,* it will be considered received by the Coast Guard when you successfully transmit the comment. If you fax, hand delivery, or mail your comment, it will be considered as having been received by the Coast Guard when it is received at the Docket Management Facility. We recommend that you include your name and a mailing address, an e-mail address, or a telephone number in the body of your document so that we can contact you if we have questions regarding your submission.

To submit your comment online, go to *http://www.regulations.gov,* select the Advanced Docket Search option on the right side of the screen, insert ''USCG–2009–0194'' in the Docket ID box, press Enter, and then click on the balloon shape in the Actions column. If you submit your comments by mail or hand delivery, submit them in an unbound format, no larger than 8½ by 11 inches, suitable for copying and electronic filing. If you submit comments by mail and would like to know that they reached the Facility, please enclose a stamped, self-addressed postcard or envelope. We will consider all comments and material received during the comment period and may change the rule based on your comments.

Viewing Comments and Documents

To view comments, as well as documents mentioned in this preamble as being available in the docket, go to *http://www.regulations.gov,* select the Advanced Docket Search option on the right side of the screen, insert USCG–2009–0194 in the Docket ID box, press Enter, and then click on the item in the Docket ID column. You may also visit the Docket Management Facility in Room W12–140 on the ground floor of the Department of Transportation West Building, 1200 New Jersey Avenue, SE., Washington, DC 20590, between 9 a.m. and 5 p.m., Monday through Friday, except Federal holidays. We have an agreement with the Department of Transportation to use the Docket Management Facility.

Privacy Act

Anyone can search the electronic form of comments received into any of our dockets by the name of the individual submitting the comment (or signing the comment, if submitted on behalf of an association, business, labor union, etc.). You may review a Privacy Act notice regarding our public dockets in the January 17, 2008 issue of the **Federal Register** (73 FR 3316).

Public Meeting

We do not now plan to hold a public meeting. But you may submit a request for one by July 13, 2009 using one of the four methods specified under **ADDRESSES**. Please explain why you believe a public meeting would be beneficial. If we determine that one would aid this rulemaking, we will hold one at a time and place announced by a later notice in the **Federal Register.**

For information on facilities or services for individuals with disabilities or to request special assistance at the public meeting, contact Petty Officer Kristen Beer at the telephone number or e-mail address indicated under the **FOR FURTHER INFORMATION CONTACT** section of this notice.

Background and Purpose

The International Jet Sports Boating Association (IJSBA) is sponsoring the IJSBA World Finals. The event will consist of 300 to 750 personal watercraft racing in a circular course. The race will be broken down into heats of one to 20. The sponsor will provide four course marshalls and rescue vessels, as well as four perimeter safety boats for the duration of this event. This safety zone is necessary to provide for the safety of the participants, crew, spectators, participating vessels, and other vessels and users of the waterway.

Discussion of Proposed Rule

The Coast Guard proposes establishing a safety zone on Lake Havasu, Arizona that would be effective from October 6, 2009 through October 19, 2009. The safety zone would be bounded by lines connecting the following points: Beginning at 34°28.49′ N, 114°21.33′ W; thence to 34°28.55′ N, 114°21.56′ W; thence to 34°28.43′ N, 114°21.81′ W; thence to 34°28.32′ N, 114°21.71′ W; thence along the shoreline returning to 34°28.49′ N, 114°21.33′ W (NAD 83).

This safety zone is necessary to provide for the safety of the participants, crew, spectators, participating vessels, and other vessels and users of the waterway. Persons and vessels would be prohibited from entering into, transiting through, or anchoring within this safety zone unless authorized by the Captain of the Port San Diego or his designated representative.

Regulatory Analyses

We developed this proposed rule after considering numerous statutes and executive orders related to rulemaking. Below we summarize our analyses based on 13 of these statutes or executive orders.

Regulatory Planning and Review

This proposed rule is not a significant regulatory action under section 3(f) of Executive Order 12866, Regulatory Planning and Review, and does not require an assessment of potential costs and benefits under section 6(a)(3) of that Order. The Office of Management and Budget has not reviewed it under that Order. We expect the economic impact of this proposed rule to be so minimal that a full Regulatory Evaluation is unnecessary. This determination is based on the size and location of the safety zone. Commercial vessels would not be hindered by the safety zone. Recreational vessels would not be allowed to transit through the designated safety zone during the specified times unless authorized to do so by the Captain of the Port or his designated representative.

Small Entities

Under the Regulatory Flexibility Act (5 U.S.C. 601–612), we have considered whether this proposed rule would have a significant economic impact on a substantial number of small entities. The term ''small entities'' comprises small businesses, not-for-profit organizations that are independently owned and operated and are not dominant in their fields, and governmental jurisdictions with populations of less than 50,000.

The Coast Guard certifies under 5 U.S.C. 605(b) that this proposed rule would not have a significant economic impact on a substantial number of small entities.

This proposed rule would affect the following entities, some of which might be small entities: The owners or operators of vessels intending to transit or anchor in a portion of the lower Colorado River at Lake Havasu from October 6, 2009 through October 19, 2009.

This safety zone would not have a significant economic impact on a substantial number of small entities for the following reasons. Vessel traffic can pass safely around the safety zone. Before the activation of the zone, the Coast Guard would publish a local notice to mariners (LNM).

If you think that your business, organization, or governmental jurisdiction qualifies as a small entity and that this rule would have a significant economic impact on it, please submit a comment (see **ADDRESSES**) explaining why you think it qualifies and how and to what degree this rule would economically affect it.

Assistance for Small Entities

Under section 213(a) of the Small Business Regulatory Enforcement Fairness Act of 1996 (Pub. L. 104–121), we want to assist small entities in understanding this proposed rule so that they can better evaluate its effects on them and participate in the rulemaking. If the rule would affect your small business, organization, or governmental jurisdiction and you have questions concerning its provisions or options for compliance, please contact Petty Officer Kristen Beer, USCG, Waterways Management, U.S. Coast Guard Sector San Diego at 619–278–7262. The Coast Guard will not retaliate against small entities that question or complain about this proposed rule or any policy or action of the Coast Guard.

Collection of Information

This proposed rule would call for no new collection of information under the Paperwork Reduction Act of 1995 (44 U.S.C. 3501–3520).

Federalism

A rule has implications for federalism under Executive Order 13132, Federalism, if it has a substantial direct effect on State or local governments and would either preempt State law or impose a substantial direct cost of compliance on them. We have analyzed this proposed rule under that Order and

have determined that it does not have implications for federalism.

Unfunded Mandates Reform Act

The Unfunded Mandates Reform Act of 1995 (2 U.S.C. 1531–1538) requires Federal agencies to assess the effects of their discretionary regulatory actions. In particular, the Act addresses actions that may result in the expenditure by a State, local, or tribal government, in the aggregate, or by the private sector of $100,000,000 or more in any one year. Though this proposed rule would not result in such an expenditure, we do discuss the effects of this rule elsewhere in this preamble.

Taking of Private Property

This proposed rule would not effect a taking of private property or otherwise have taking implications under Executive Order 12630, Governmental Actions and Interference with Constitutionally Protected Property Rights.

Civil Justice Reform

This proposed rule meets applicable standards in sections 3(a) and 3(b)(2) of Executive Order 12988, Civil Justice Reform, to minimize litigation, eliminate ambiguity, and reduce burden.

Protection of Children

We have analyzed this proposed rule under Executive Order 13045, Protection of Children from Environmental Health Risks and Safety Risks. This rule is not an economically significant rule and would not create an environmental risk to health or risk to safety that might disproportionately affect children.

Indian Tribal Governments

This proposed rule does not have tribal implications under Executive Order 13175, Consultation and Coordination with Indian Tribal Governments, because it would not have a substantial direct effect on one or more Indian tribes, on the relationship between the Federal Government and Indian tribes, or on the distribution of power and responsibilities between the Federal Government and Indian tribes.

Energy Effects

We have analyzed this proposed rule under Executive Order 13211, Actions Concerning Regulations That Significantly Affect Energy Supply, Distribution, or Use. We have determined that it is not a ''significant energy action'' under that order because it is not a ''significant regulatory action'' under Executive Order 12866 and is not likely to have a significant adverse effect on the supply, distribution, or use of energy. The Administrator of the Office of Information and Regulatory Affairs has not designated it as a significant energy action. Therefore, it does not require a Statement of Energy Effects under Executive Order 13211.

Technical Standards

The National Technology Transfer and Advancement Act (NTTAA) (15 U.S.C. 272 note) directs agencies to use voluntary consensus standards in their regulatory activities unless the agency provides Congress, through the Office of Management and Budget, with an explanation of why using these standards would be inconsistent with applicable law or otherwise impractical. Voluntary consensus standards are technical standards (e.g., specifications of materials, performance, design, or operation; test methods; sampling procedures; and related management systems practices) that are developed or adopted by voluntary consensus standards bodies.

This proposed rule does not use technical standards. Therefore, we did not consider the use of voluntary consensus standards.

Environment

We have analyzed this proposed rule under Department of Homeland Security Management Directive 0023.1 and Commandant Instruction M16475.lD, which guide the Coast Guard in complying with the National Environmental Policy Act of 1969 (NEPA) (42 U.S.C. 4321–4370f), and have made a preliminary determination that this action is one of a category of actions which do not individually or cumulatively have a significant effect on the human environment. A preliminary environmental analysis checklist supporting this determination is available in the docket where indicated under **ADDRESSES**. This proposed rule involves the establishment of a safety zone, which falls under paragraph 34(g) in Figure 2–1 of the Instruction. We seek any comments or information that may lead to the discovery of a significant environmental impact from this proposed rule.

List of Subjects in 33 CFR Part 165

Harbors, Marine safety, Navigation (water), Reporting and recordkeeping requirements, Security measures, Waterways.

For the reasons discussed in the preamble, the Coast Guard proposes to amend 33 CFR part 165 as follows:

PART 165—REGULATED NAVIGATION AREAS AND LIMITED ACCESS AREAS

1. The authority citation for part 165 continues to read as follows:

Authority: 33 U.S.C. 1226, 1231; 46 U.S.C. Chapter 701, 3306, 3703; 50 U.S.C. 191, 195; 33 CFR 1.05–1, 6.04–1, 6.04–6, and 160.5; Pub. L. 107–295, 116 Stat. 2064; Department of Homeland Security Delegation No. 0170.1.

2. Add a new temporary § 165.T11–182 to read as follows:

§ 165.T11–182 Safety Zone; IJSBA World Finals, Lower Colorado River, Lake Havasu, AZ.

(a) *Location.* The following area is a safety zone: All waters of Lake Havasu, from surface to bottom, encompassed by lines connecting the following points: Beginning at 34°28.49′ N, 114°21.33′ W; thence to 34°28.55′ N, 114°21.56′ W; thence to 34°28.43′ N, 114°21.81′ W; thence to 34°28.32′ N, 114°21.71′ W; thence along the shoreline returning to 34°28.49′ N, 114°21.33′ W. These coordinates are based upon NAD 83.

(b) *Effective Period.* This section is effective and will be enforced from October 6, 2009 through October 19, 2009. If the International Jet Sports Boating Association World Finals concludes prior to the scheduled termination of the effective period, the Captain of the Port will cease enforcement of this safety zone and will announce that fact via Broadcast Notice to Mariners.

(c) *Definitions.* The following definition applies to this section: *Designated representative,* means any Commissioned, Warrant, or Petty Officers of the Coast Guard or Coast Guard Auxiliary, and local, state, and federal law enforcement officers who have been authorized to act on the behalf of the Captain of the Port.

(d) *Regulations.* (1) Under the general regulations in § 165.23, entry into, transit through or anchoring within this safety zone is prohibited unless authorized by the Captain of the Port San Diego or his designated representative.

(2) Mariners desiring to enter or operate in the safety zone may request authorization to do so from the Patrol Commander (PATCOM). The PATCOM may be contacted on VHF–FM Channel 16.

(3) All persons and vessels must comply with the instructions of the Coast Guard Captain of the Port or his designated representative.

(4) Upon being hailed by U.S. Coast Guard patrol personnel by siren, radio, flashing light, or other means, the operator of a vessel must proceed as directed.

(5) The Coast Guard may be assisted by other federal, state, or local agencies.

Dated: June 4, 2009.

T.H. Farris,

Captain, U.S. Coast Guard, Captain of the Port San Diego.

[FR Doc. E9–14591 Filed 6–19–09; 8:45 am]

BILLING CODE 4910–15–P

ENVIRONMENTAL PROTECTION AGENCY

40 CFR Part 52

[EPA–R03–OAR–2008–0931; FRL–8920–1]

Approval and Promulgation of Air Quality Implementation Plans; Maryland; Attainment Demonstration for the Baltimore 8-Hour Ozone Moderate Nonattainment Area; Reopening of Comment Period

AGENCY: Environmental Protection Agency (EPA).

ACTION: Proposed rules; reopening of comment period.

SUMMARY: EPA is reopening the comment period for a document published on May 8, 2009 (74 FR 21594). In this May 8, 2009 document, EPA proposed to disapprove the ozone attainment demonstration portion of a comprehensive State Implementation Plan (SIP) revision submitted by the State of Maryland to meet the Clean Air Act (CAA) requirements for attaining the 8-hour ozone national ambient air quality standard (NAAQS) for the Baltimore moderate nonattainment area (Baltimore Area). The comment period on this proposed action closed on June 8, 2009. At the request of the State of Maryland, EPA is reopening the comment period through August 7, 2009. EPA will consider all comments submitted on this proposed action from May 8, 2009 through August 7, 2009.

DATES: Comments must be received on or before August 7, 2009.

ADDRESSES: Submit your comments, identified by Docket ID Number EPA–R03–OAR–2008–0931 by one of the following methods:

A. *http://www.regulations.gov.* Follow the on-line instructions for submitting comments.

B. *E-mail: fernandez.cristina@epa.gov.*

C. *Mail:* EPA–R03–OAR–2008–0931, Cristina Fernandez, Air Quality Planning Branch, Mailcode 3AP21, U.S. Environmental Protection Agency, Region III, 1650 Arch Street, Philadelphia, Pennsylvania 19103.

D. *Hand Delivery:* At the previously-listed EPA Region III address. Such deliveries are only accepted during normal hours of operation, and special arrangements should be made for deliveries of boxed information.

Instructions: Direct your comments to Docket ID No. EPA–R03–OAR–2008–0931. EPA's policy is that all comments received will be included in the public docket without change, and may be made available online at *http://www.regulations.gov*, including any personal information provided, unless the comment includes information claimed to be Confidential Business Information (CBI) or other information whose disclosure is restricted by statute. Do not submit information that you consider to be CBI or otherwise protected through *http://www.regulations.gov* or e-mail. The *http://www.regulations.gov* Web site is an anonymous access system, which means EPA will not know your identity or contact information unless you provide it in the body of your comment. If you send an e-mail comment directly to EPA without going through *http://www.regulations.gov*, your e-mail address will be automatically captured and included as part of the comment that is placed in the public docket and made available on the Internet. If you submit an electronic comment, EPA recommends that you include your name and other contact information in the body of your comment and with any disk or CD–ROM you submit. If EPA cannot read your comment due to technical difficulties and cannot contact you for clarification, EPA may not be able to consider your comment. Electronic files should avoid the use of special characters, any form of encryption, and be free of any defects or viruses.

Docket: All documents in the electronic docket are listed in the *http://www.regulations.gov* index. Although listed in the index, some information is not publicly available, i.e., CBI or other information whose disclosure is restricted by statute. Certain other material, such as copyrighted material, is not placed on the Internet and will be publicly available only in hard copy form. Publicly available docket materials are available either electronically in *http://www.regulations.gov* or in hard copy during normal business hours at the Air Protection Division, U.S. Environmental Protection Agency, Region III, 1650 Arch Street, Philadelphia, Pennsylvania 19103. Copies of the State submittal are available at the Maryland Department of the Environment, 1800 Washington Boulevard, Suite 705, Baltimore, Maryland 21230.

FOR FURTHER INFORMATION CONTACT: Cristina Fernandez, (215) 814–2178, or by e-mail at *fernandez.cristina@epa.gov.* Please note that while questions on the May 8, 2009 proposed rule for the Baltimore area may be posed via telephone and e-mail, formal comments must be submitted in writing, as indicated in the **ADDRESSES** section of this document.

Dated: June 11, 2009.

William C. Early,

Acting Regional Administrator, Region III.

[FR Doc. E9–14601 Filed 6–19–09; 8:45 am]

BILLING CODE 6560–50–P

ENVIRONMENTAL PROTECTION AGENCY

40 CFR Part 52

[EPA–R03–OAR–2008–0928, EPA–R03–OAR–2008–0929, EPA–R03–OAR–2008–0930; FRL–8920–2]

Approval and Promulgation of Air Quality Implementation Plans; Delaware, Maryland, Pennsylvania; Attainment Demonstration for the Philadelphia-Wilmington-Atlantic City Moderate 8-Hour Ozone Nonattainment Area; Reopening of Comment Periods

AGENCY: Environmental Protection Agency (EPA).

ACTION: Proposed rules; reopening of comment periods.

SUMMARY: EPA is reopening the comment periods for documents published on May 8, 2009 (74 FR 21588, 74 FR 21599, 74 FR 21604). In these May 8, 2009 documents, EPA proposed to disapprove the ozone attainment demonstration portion of comprehensive State Implementation Plan (SIP) revisions submitted by the States of Delaware, Maryland and Pennsylvania to meet the Clean Air Act (CAA) requirements for attaining the 8-hour ozone national ambient air quality standard (NAAQS) for the Philadelphia-Wilmington-Atlantic City moderate nonattainment area (Philadelphia Area). The comment periods on these proposed actions closed on June 8, 2009. Pursuant to requests from the State of Maryland, the Commonwealth of Pennsylvania, and the Delaware Valley Regional Planning Commission, EPA is reopening the comment periods through August 7, 2009. EPA will consider all comments submitted on these proposed actions from May 8, 2009 through August 7, 2009.

DATES: Comments must be received on or before August 7, 2009.

ADDRESSES: Submit your comments, identified by Docket ID Number EPA–R03–OAR–2008–0928 (Pennsylvania), EPA–R03–OAR–2008–0929 (Maryland), EPA–R03–OAR–2008–0930 (Delaware) by one of the following methods:

A. *http://www.regulations.gov.* Follow the on-line instructions for submitting comments.

B. *E-mail: fernandez.cristina@epa.gov.*

C. *Mail:* EPA–R03–OAR–2008–0928, EPA–R03–OAR–2008–0929, EPA–R03–OAR–2008–0930, Cristina Fernandez, Chief, Air Quality Planning Branch, Mailcode 3AP21, U.S. Environmental Protection Agency, Region III, 1650 Arch Street, Philadelphia, Pennsylvania 19103.

D. *Hand Delivery:* At the previously-listed EPA Region III address. Such deliveries are only accepted during the normal hours of operation, and special arrangements should be made for deliveries of boxed information.

Instructions: Direct your comments to Docket ID No. EPA–EPA–R03–OAR–2008–0928, EPA–R03–OAR–2008–0929, EPA–R03–OAR–2008–0930. EPA's policy is that all comments received will be included in the public docket without change, and may be made available online at *http://www.regulations.gov*, including any personal information provided, unless the comment includes information claimed to be Confidential Business Information (CBI) or other information whose disclosure is restricted by statute. Do not submit information that you consider to be CBI or otherwise protected through *http://www.regulations.gov* or e-mail. The *http://www.regulations.gov* Web site is an anonymous access system, which means EPA will not know your identity or contact information unless you provide it in the body of your comment. If you send an e-mail comment directly to EPA without going through *http://www.regulations.gov,* your e-mail address will be automatically captured and included as part of the comment that is placed in the public docket and made available on the Internet. If you submit an electronic comment, EPA recommends that you include your name and other contact information in the body of your comment and with any disk or CD–ROM you submit. If EPA cannot read your comment due to technical difficulties and cannot contact you for clarification, EPA may not be able to consider your comment. Electronic files should avoid the use of special characters, any form of encryption, and be free of any defects or viruses.

Docket: All documents in the electronic docket are listed in the *http://www.regulations.gov* index. Although listed in the index, some information is not publicly available, i.e., CBI or other information whose disclosure is restricted by statute. Certain other material, such as copyrighted material, is not placed on the Internet and will be publicly available only in hard copy form. Publicly available docket materials are available either electronically in *http://www.regulations.gov* or in hard copy during normal business hours at the Air Protection Division, U.S. Environmental Protection Agency, Region III, 1650 Arch Street, Philadelphia, Pennsylvania 19103. Copies of Delaware's State submittals are available at the Delaware Department of Natural Resources & Environmental Control, 89 Kings Highway, P.O. Box 1401, Dover, Delaware 19903. Copies of Maryland's State submittals are available at the Maryland Department of the Environment, 1800 Washington Boulevard, Suite 705, Baltimore, Maryland 21230. Copies of Pennsylvania's State submittals are available at the Pennsylvania Department of Environmental Protection, Bureau of Air Quality Control, P.O. Box 8468, 400 Market Street, Harrisburg, Pennsylvania 17105.

FOR FURTHER INFORMATION CONTACT: Cristina Fernandez, (215) 814–2178, or by e-mail at *fernandez.cristina@epa.gov*. Please note that while questions on the May 8, 2009 proposed rules for the Philadelphia area may be posed via telephone and e-mail, formal comments must be submitted in writing, as indicated in the **ADDRESSES** section of this document.

Dated: June 11, 2009.

William C. Early,

Acting Regional Administrator, Region III.

[FR Doc. E9–14602 Filed 6–19–09; 8:45 am]

BILLING CODE 6560–50–P

ENVIRONMENTAL PROTECTION AGENCY

40 CFR Part 52

[EPA–R02–OAR–2008–0497, FRL–8920–5]

Approval and Promulgation of Implementation Plans; New Jersey Ozone Attainment Demonstration—Reopening of Comment Period

AGENCY: Environmental Protection Agency (EPA).

ACTION: Proposed rule; reopening of comment period.

SUMMARY: EPA is reopening the comment period for a proposal published on May 8, 2009 (74 FR 21578). On May 8, 2009, EPA proposed to disapprove the ozone attainment demonstration portion of a comprehensive State Implementation Plan (SIP) revision submitted by the State of New Jersey to meet the Clean Air Act (CAA) requirements for attaining the 8-hour ozone national ambient air quality standard (NAAQS) in New Jersey. The comment period on this proposed action closed on June 8, 2009. Pursuant to requests from the State of New Jersey, EPA is reopening the comment period through August 7, 2009. EPA will consider all comments submitted on these proposed actions from May 8, 2009 through August 7, 2009.

DATES: Comments must be received on or before August 7, 2009.

ADDRESSES: Submit your comments, identified by Docket Number EPA–R02–OAR–2008–0497, by one of the following methods:

- *http://www.regulations.gov:* Follow the on-line instructions for submitting comments.
- *E-mail: Werner.Raymond@epa.gov*
- *Fax:* 212–637–3901.
- *Mail:* Raymond Werner, Chief, Air Programs Branch, Environmental Protection Agency, Region 2 Office, 290 Broadway, 25th Floor, New York, New York 10007–1866.
- *Hand Delivery:* Raymond Werner, Chief, Air Programs Branch, Environmental Protection Agency, Region 2 Office, 290 Broadway, 25th Floor, New York, New York 10007–1866. Such deliveries are only accepted during the Regional Office's normal hours of operation. The Regional Office's official hours of business are Monday through Friday, 8:30 a.m. to 4:30 p.m. excluding Federal holidays.

Instructions: Direct your comments to Docket No. EPA–R02–OAR–2008–0497. EPA's policy is that all comments received will be included in the public docket without change and may be made available online at *http://www.regulations.gov,* including any personal information provided, unless the comment includes information claimed to be Confidential Business Information (CBI) or other information whose disclosure is restricted by statute. Do not submit information that you consider to be CBI or otherwise protected through *http://www.regulations.gov* or e-mail. The *http://www.regulations.gov* website is an ''anonymous access'' system, which means EPA will not know your identity or contact information unless you

provide it in the body of your comment. If you send an e-mail comment directly to EPA without going through *http://www.regulations.gov* your e-mail address will be automatically captured and included as part of the comment that is placed in the public docket and made available on the Internet. If you submit an electronic comment, EPA recommends that you include your name and other contact information in the body of your comment and with any disk or CD–ROM you submit. If EPA cannot read your comment due to technical difficulties and cannot contact you for clarification, EPA may not be able to consider your comment. Electronic files should avoid the use of special characters or any form of encryption, and be free of any defects or viruses. For additional information about EPA's public docket visit the EPA Docket Center homepage at *http://www.epa.gov/epahome/dockets.htm.*

Docket: All documents in the docket are listed in the *http://www.regulations.gov* index. Although listed in the index, some information is not publicly available, e.g., CBI or other information whose disclosure is restricted by statute. Certain other material, such as copyrighted material, will be publicly available only in hard copy. Publicly available docket materials are available either electronically in *http://www.regulations.gov* or in hard copy at the Environmental Protection Agency, Region II Office, Air Programs Branch, 290 Broadway, 25th Floor, New York, New York 10007–1866. EPA requests, if at all possible, that you contact the individual listed in the **FOR FURTHER INFORMATION CONTACT** section to view the hard copy of the docket. You may view the hard copy of the docket Monday through Friday, 8 a.m. to 4 p.m., excluding Federal holidays.

FOR FURTHER INFORMATION CONTACT: Robert Kelly (*kelly.bob@epa.gov*) Air Programs Branch, Environmental Protection Agency, 290 Broadway, 25th Floor, New York, New York 10007–1866, (212) 637–4249.

Dated: June 12, 2009.

George Pavlou,

Acting Regional Administrator, Region 2.

[FR Doc. E9–14603 Filed 6–19–09; 8:45 am]

BILLING CODE 6560–50–P

ENVIRONMENTAL PROTECTION AGENCY

40 CFR Part 52

[EPA–R01–OAR–2008–0117, FRL–8920–6]

Disapproval of Air Quality Implementation Plans; Connecticut; Attainment Demonstration for the Connecticut Portion of the New York-N. New Jersey-Long Island, NY-NJ-CT 8-Hour Ozone Nonattainment Area; Reopening of Comment Period

AGENCY: Environmental Protection Agency (EPA).

ACTION: Proposed rule; reopening of comment period.

SUMMARY: EPA is reopening the public comment period for a proposal published on May 8, 2009 (74 FR 21568). In that action, EPA proposed to disapprove the ozone attainment demonstration submitted by the State of Connecticut for the Connecticut portion of the New York-N. New Jersey-Long Island, NY-NJ-CT moderate ozone nonattainment area. The comment period on this proposed action closed on June 8, 2009. At the request of the State of Connecticut, EPA is reopening the public comment period through August 7, 2009. EPA will consider all comments submitted on this proposed action from May 8, 2009 through August 7, 2009.

DATES: Written comments must be received on or before August 7, 2009.

ADDRESSES: Submit your comments, identified by Docket ID No. EPA–R01–OAR–2008–0117, by one of the following methods:

1. *http://www.regulations.gov:* Follow the on-line instructions for submitting comments.
2. *E-mail: arnold.anne@epa.gov.*
3. *Fax:* (617) 918–0047.
4. *Mail:* ''Docket Identification Number EPA–R01–OAR–2008–0117,'' Anne Arnold, U.S. Environmental Protection Agency, EPA New England Regional Office, One Congress Street, Suite 1100 (mail code CAQ), Boston, MA 02114–2023.
5. *Hand Delivery or Courier:* Deliver your comments to: Anne Arnold, Manager, Air Quality Planning Unit, Office of Ecosystem Protection, U.S. Environmental Protection Agency, EPA New England Regional Office, One Congress Street, 11th floor, (CAQ), Boston, MA 02114–2023. Such deliveries are only accepted during the Regional Office's normal hours of operation. The Regional Office's official hours of business are Monday through Friday, 8:30 a.m. to 4:30 p.m., excluding legal holidays.

Instructions: Direct your comments to Docket ID No. EPA–R01–OAR–2008–0117. EPA's policy is that all comments received will be included in the public docket without change and may be made available online at *http://www.regulations.gov,* including any personal information provided, unless the comment includes information claimed to be Confidential Business Information (CBI) or other information whose disclosure is restricted by statute. Do not submit through *http://www.regulations.gov,* or e-mail, information that you consider to be CBI or otherwise protected. The *http://www.regulations.gov* Web site is an ''anonymous access'' system, which means EPA will not know your identity or contact information unless you provide it in the body of your comment. If you send an e-mail comment directly to EPA without going through *http://www.regulations.gov* your e-mail address will be automatically captured and included as part of the comment that is placed in the public docket and made available on the Internet. If you submit an electronic comment, EPA recommends that you include your name and other contact information in the body of your comment and with any disk or CD–ROM you submit. If EPA cannot read your comment due to technical difficulties and cannot contact you for clarification, EPA may not be able to consider your comment. Electronic files should avoid the use of special characters, any form of encryption, and be free of any defects or viruses.

Docket: All documents in the electronic docket are listed in the *http://www.regulations.gov* index. Although listed in the index, some information is not publicly available, i.e., CBI or other information whose disclosure is restricted by statute. Certain other material, such as copyrighted material, is not placed on the Internet and will be publicly available only in hard copy form. Publicly available docket materials are available either electronically in *http://www.regulations.gov* or in hard copy at Office of Ecosystem Protection, U.S. Environmental Protection Agency, EPA New England Regional Office, One Congress Street, Suite 1100, Boston, MA. EPA requests that if at all possible, you contact the person listed in the **FOR FURTHER INFORMATION CONTACT** section to schedule your inspection. The Regional Office's official hours of business are Monday through Friday, 8:30 a.m. to 4:30 p.m., excluding legal holidays.

FOR FURTHER INFORMATION CONTACT: Richard P. Burkhart, Air Quality

Planning Unit, U.S. Environmental Protection Agency, EPA New England Regional Office, One Congress Street, Suite 1100 (CAQ), Boston, MA 02114–2023, telephone number (617) 918–1664, fax number (617) 918–0664, e-mail *Burkhart.Richard@epa.gov.*

Dated: June 12, 2009.

Ira W. Leighton,

Acting, Regional Administrator, EPA New England.

[FR Doc. E9–14604 Filed 6–19–09; 8:45 am]

BILLING CODE 6560–50–P

DEPARTMENT OF HEALTH AND HUMAN SERVICES

Centers for Medicare & Medicaid Services

42 CFR Part 441

[CMS–2296–ANPRM]

RIN 0938–AP61

Medicaid Program; Home and Community-Based Services (HCBS) Waivers

AGENCY: Centers for Medicare & Medicaid Services (CMS), HHS.

ACTION: Advance notice of proposed rulemaking.

SUMMARY: This advance notice of proposed rulemaking announces the intention of CMS to publish proposed amendments to the regulations implementing Medicaid home and community-based services waivers under section 1915(c) of the Social Security Act and solicits advance public comments on the merits of providing States the option to combine or eliminate the existing three permitted waiver targeting groups, and on the most effective means to define home and community.

DATES: To be assured consideration, comments must be received at one of the addresses provided below, no later than 5 p.m. on August 21, 2009.

ADDRESSES: In commenting, please refer to file code CMS–2296–ANPRM. Because of staff and resource limitations, we cannot accept comments by facsimile (FAX) transmission.

You may submit comments in one of four ways (please choose only one of the ways listed):

1. *Electronically.* You may submit electronic comments on this regulation to *http://www.regulations.gov.* Follow the instructions under the ''More Search Options'' tab.

2. *By regular mail.* You may mail written comments to the following address only: Centers for Medicare & Medicaid Services, Department of Health and Human Services, Attention: CMS–2296–ANPRM, P.O. Box 8016, Baltimore, MD 21244–1850.

Please allow sufficient time for mailed comments to be received before the close of the comment period.

3. *By express or overnight mail.* You may send written comments to the following address only: Centers for Medicare & Medicaid Services, Department of Health and Human Services, Attention: CMS–2296–ANPRM, Mail Stop C4–26–05, 7500 Security Boulevard, Baltimore, MD 21244–1850.

4. *By hand or courier.* If you prefer, you may deliver (by hand or courier) your written comments before the close of the comment period to either of the following addresses:

a. For delivery in Washington, DC—Centers for Medicare & Medicaid Services, Department of Health and Human Services, Room 445–G, Hubert H. Humphrey Building, 200 Independence Avenue, SW., Washington, DC 20201

(Because access to the interior of the Hubert H. Humphrey Building is not readily available to persons without Federal government identification, commenters are encouraged to leave their comments in the CMS drop slots located in the main lobby of the building. A stamp-in clock is available for persons wishing to retain a proof of filing by stamping in and retaining an extra copy of the comments being filed.).

b. For delivery in Baltimore, MD—Centers for Medicare & Medicaid Services, Department of Health and Human Services, 7500 Security Boulevard, Baltimore, MD 21244–1850.

If you intend to deliver your comments to the Baltimore address, please call telephone number (410) 786–7195 in advance to schedule your arrival with one of our staff members.

Comments mailed to the addresses indicated as appropriate for hand or courier delivery may be delayed and received after the comment period.

FOR FURTHER INFORMATION CONTACT: Mary Sowers, (410) 786–6814.

SUPPLEMENTARY INFORMATION:

Inspection of Public Comments: All comments received before the close of the comment period are available for viewing by the public, including any personally identifiable or confidential business information that is included in a comment. We post all comments received before the close of the comment period on the following Web site as soon as possible after they have been received: *http://www.regulations.gov.* Follow the search instructions on that Web site to view public comments.

Comments received timely will also be available for public inspection as they are received, generally beginning approximately 3 weeks after publication of a document, at the headquarters of the Centers for Medicare & Medicaid Services, 7500 Security Boulevard, Baltimore, Maryland 21244, Monday through Friday of each week from 8:30 a.m. to 4 p.m. To schedule an appointment to view public comments, phone 1–800–743–3951.

I. Overview

We are issuing this advance notice of proposed rulemaking (ANPRM) to announce our intention to publish a proposed rule and solicit public comments on the changes necessary to provide States the option to design home and community-based services (HCBS) waiver programs serving more than one target population. We are particularly interested in receiving comments on how removal of the existing regulatory barrier regarding target groups may increase a State's ability to design service packages based on need, rather than diagnosis or condition. Furthermore, we are interested in receiving comments on how this change may affect the State's ability to serve individuals requiring an institutional level of care and may facilitate compliance with the Americans with Disabilities Act of 1990 (ADA). Title II of the ADA prohibits discrimination on the basis of disability and the Supreme Court ruled in *Olmstead* v. *L.C.,* 527 U.S. 581 (1999), that unnecessary institutionalization may constitute discrimination under the ADA. Many States have used the home and community-based services waiver as a component of their *Olmstead* compliance efforts and we are interested in receiving comments about how this change may affect these efforts. We are intending to propose this change in an effort to remove barriers to person-centered, needs-based service delivery methods. Consequently, we are also hoping to hear from interested parties regarding recommendations to strengthen person-centered principles and practices for the successful operation of any HCBS waiver program, including those that may serve individuals based upon identified needs, rather than diagnosis.

It is also our intention to publish as a part of the proposed rule requirements related to identifying the home and community-based character of the settings in which HCBS participants

reside and/or receive services. During the development of the regulation for the new State plan HCBS benefit under section 1915(i) of the Social Security Act [1] (the Act), we received, as solicited, extensive comments on this issue. In preparation of this ANPRM, we took these comments into consideration and are contemplating publication of a proposed rule that would provide that States must define, and CMS approve, standards for home and community under HCBS waivers. Many commenters asked for a deliberative stakeholder process for developing criteria for home and community standards. This announcement provides advance notice of such a process in regard to HCBS waivers, and provides an opportunity for parties to express interest in participating.

II. Background

Section 1915(c) of the Social Security Act (the Act) authorizes the Secretary of Health and Human Services to waive certain specific Medicaid statutory requirements so that a State may offer HCBS to State-specified group(s) of Medicaid beneficiaries who meet a level of institutional care that is provided under the Medicaid State plan. This provision was added to the Act by the Omnibus Budget and Reconciliation Act (OBRA) of 1981 (with a number of subsequent amendments). Regulations were published to effectuate this statutory provision, with final regulations issued in the mid-1990s.

A. Removing Regulatory Barrier To Designing 1915(c) Waivers Based on Needs Rather Than Diagnosis or Condition

Section 1915(c) of the Act authorizes the Secretary to waive section 1902(a)(10)(B) of the Act, allowing States to waive comparability and target an HCBS waiver program to a specified Medicaid-eligible group or sub-group who would otherwise require an institutional level of care. A section 1915(c) waiver may currently only serve one of the three target populations identified in regulations at 42 CFR § 441.301. These three target groups are: Aged or disabled, or both; Mentally retarded or developmentally disabled, or both; and Mentally ill. States must develop separate 1915(c) waivers in order to serve more than one of these populations. This regulatory provision has contributed to States offering waivers with service packages tailored to different groups of individuals based upon diagnosis, rather than the individuals' actual need for support.

Because the three target populations outlined above are typically associated with a particular institutional level of care, the necessity to offer multiple separate waivers, is often framed as an inability to combine levels of care. For example, waiver costs for persons with developmental disabilities are most frequently compared to costs of Intermediate Care Facilities for Persons with Mental Retardation or conditions closely related to mental retardation (ICFs/MR), while waiver costs for persons who are aged or with physical disabilities are compared to nursing facility costs. However, the impediment to serving more than one target group through an HCBS waiver relates to the division between the target groups required in the regulation, not the associated institutional settings where those target groups would otherwise receive services but for the provision of HCBS. For example, some individuals with the need for mental health services may be appropriately served in the community at the nursing facility level of care.

Historically, in many cases pre-dating the 1915(c) HCBS waiver program, States have utilized a targeted approach to funding and budgeting for services for various populations. The CMS regulations published in the mid-1990s were modeled after those practices; the regulations reflect the funding approaches common in some State budgets. As the number of HCBS waivers across the country has grown to more than 350 waivers serving more than 1 million individuals, some States, with concurrence from stakeholder groups and individuals, have expressed a desire for the flexibility to combine these target groups in order to provide services based upon needs rather than diagnosis or condition, and for administrative relief from operating and managing multiple 1915(c) waiver programs.

We have considered these issues and intend to propose to change the regulations in 42 CFR subpart G to allow States the flexibility to combine any of the three target groups in one HCBS waiver, or possibly to choose to offer waiver services to groups defined differently from the pre-defined targeting groups. The intended proposed regulatory change would not mandate any change in State criteria for targeting HCBS waivers, it would provide additional State flexibility. We expect that States would continue to appreciate the narrow targeting permitted under section 1915(c) of the Act, particularly for populations with high needs or receiving unique services. Under the change we are planning to propose, States would still have to determine that without the waiver, participants would require institutional level of care, in accordance with section 1915(c) of the Act. Likewise, the intended proposal to provide additional targeting flexibility for States will not affect the cost-neutrality requirement inherent in section 1915(c) waivers.

In order to assure that individuals served by waivers targeting a broad range of conditions receive individualized care, we further plan to propose to require that: (1) The service planning process be person-centered, and (2) the services specified in the plan of care be based upon the needs of the individual, not an average need among one target group. In addition, we intend to update the language in the regulation related to the target groups to reflect more contemporary, person-first language.

We intend to propose this change to provide States with one additional tool to better serve their citizens, with person-centered delivery systems driven by need, not diagnosis or existing dedicated funding streams. A Federal regulatory change that permits combining targeted groups within one waiver, while optional for States and not an instantaneous change in State structures, would remove one barrier for States wishing to design waivers across various populations. We encourage comments on all aspects of the change we contemplate proposing, including its possible utility in enhancing State flexibility, minimizing administrative burden, facilitating compliance with the ADA, and facilitating a more needs-based service system.

B. Home and Community-Based Characteristics

We are also intending to propose adjusting the regulations at 42 CFR subpart G to describe expectations with regard to waiver participants being served in the home and community. We believe such proposed requirements would increase choice by providing waiver participants with notice of housing alternatives, and would create greater demand and market incentive for person-centered residential settings. Our intended proposed changes would include methods that States may follow to identify appropriate financing mechanisms for reducing the size of existing larger residences, divesting themselves or helping their providers divest themselves of sizable properties, and assisting providers' transition to smaller, more individualized settings. We invite commenters to suggest other

[1] 73 FR 18676, *http://edocket.access.gpo.gov/2008/pdf/08-1084.pdf.*

forms of technical assistance that CMS might provide to assist States in enhancing their efforts for optimal choice, control, and community integration for persons with disabilities and individuals who are aging.

Since the inception of the 1915(c) HCBS waiver program in the 1981, the Centers for Medicare & Medicaid Services (CMS) (formerly known as Health Care Finance Administration (HCFA)) has supported State efforts to serve individuals in the least restrictive setting possible. However, home and community have not been explicitly defined, and as a consequence, some individuals who receive HCBS in a residential setting managed or operated by a service provider have experienced a provider-centered and institution-like living arrangement, instead of a person-centered and home-like environment with the freedoms that should be characteristic of any home and community-based setting. For some years, we have attempted to address this problem indirectly through our review of State service definitions for HCBS, with limited success. Through this ANPRM, we are announcing our intention to propose to affirmatively identify expectations for characteristics of home and community-based settings.

The Deficit Reduction Act of 2005 created a new section 1915(i) of the Social Security Act. Section 1915(i) permits States to offer the HCBS specifically identified in section 1915(c)(4)(b) of the Act as a State plan option without requiring States to submit a waiver application. In addition to making HCBS available under the State plan, Congress expressed interest in assuring small, community-based home-like environments through statutory requirements in section 6071 of the DRA of 2005 for the Money Follows the Person Demonstration Program. This program authorized grants to States to increase the use of HCBS, rather than institutional services, and required that community-based residential settings include no more than a specific limited number of residents.

A regulatory change articulating CMS requirements for the nature of home and community-based residence under section 1915(c) HCBS waivers is necessary to ensure that the expectations for home and community characteristics are consistent across section 1915(c) of the Act and section 1915(i) authorities, and to ensure, most importantly, that individuals receiving HCBS have meaningful alternatives to institutional care, regardless of the section of the statute authorizing their services. Therefore, we are planning to propose adding to 42 CFR subpart G a requirement that individuals receiving HCBS waiver services must reside in the home or community, in accordance with either of two criteria enumerated below:

- Resides in a home or apartment not owned, leased or controlled by a provider of any health-related treatment or support services; or
- Resides in a home or apartment that is owned, leased or controlled by a provider of one or more health-related treatment or support services, and that meets standards for community living, as defined by the State and approved by the Secretary.

We believe that this wording takes into account the variety of living situations that should be exempt from evaluation, and avoids indirect indicators such as number of residents. Only living situations in which a paid provider of services has opportunity to affect the degree of independence and choice will trigger application of additional State-defined and CMS-approved standards for community living. Standards for community living are to optimize participant independence and community integration, promote initiative and choice in daily living, and facilitate full access to community services. To ensure that these goals are met, standards must be developed through strong stakeholder input. We would be interested in receiving comments regarding strategies that States could employ to solicit and incorporate strong stakeholder input in their efforts to define standards for community living.

We do not contemplate specifying criteria for home and community standards in the proposed regulation. We do solicit stakeholder interest in working with CMS to develop policy guidelines for State definitions.

The intent of these guidelines is to create the necessary conditions so that individuals are able to reside in person-centered, home-like environments where they can enjoy all of the liberties of community living. We recognize that it is difficult for a State to develop and monitor standards related to the individual's standing in a landlord/tenant relationship or in homeownership without inadvertently omitting an arrangement that could be ideal for a particular individual. Furthermore, we recognize that the criteria listed above may not address the possibility that some providers may undertake efforts to avert state-established standards. In light of the complexity of this matter, the long-standing HCBS waivers operating in the country currently, and the many existing efforts to ensure that individuals are provided services in the setting where they have maximum choice, control and individual liberties, CMS solicits public input on strategies to address this issue of maximum individual choice and control for the 1915(c) waiver participants. We solicit comments on pathways that States may take to improve their systems to ensure that the settings where services are rendered are truly home and community-based in nature, and that individuals are offered meaningful opportunities for community living. In addition, we solicit input on the potential impact of this issue on federally recognized tribes. We recognize that States will require assistance and technical guidance as they make changes, and also solicit comments on the nature of guidance and assistance that may be needed.

III. Intentions of This Notice

We encourage comments that assist us in determining all implications of our contemplated proposed regulatory changes, and to assist us in constructing the regulations in a manner that provides appropriate guidance and incentives to result in meaningful, positive change for the nearly one million individuals currently served through 1915(c) HCBS waivers.

IV. Response to Comments

Because of the large number of comments we normally receive on a proposed rule, we are not able to acknowledge or respond to them individually. However, we will consider all comments we receive by the date and time specified in the **DATES** section of this advance notice of proposed rulemaking, and will address these comments in any proposed regulation that results from this advance notice.

V. Collection of Information Requirements

This document does not impose information collection and recordkeeping requirements. Consequently, it need not be reviewed by the Office of Management and Budget under the authority of the Paperwork Reduction Act of 1995.

Authority: Secs. 1102 and 1871 of the Social Security Act (42 U.S.C. 1302 and 1395hh).

Dated: May 29, 2009.

Charlene Frizzera,

Acting Administrator, Centers for Medicare & Medicaid Services.

Approved: June 16, 2009.

Kathleen Sebelius,

Secretary.

[FR Doc. E9–14559 Filed 6–19–09; 8:45 am]

BILLING CODE 4120–01–P

DEPARTMENT OF TRANSPORTATION

Pipeline and Hazardous Materials Safety Administration

49 CFR Part 107

[Docket No. PHMSA–2008–0010 (HM–208G)]

RIN 2137–AE35

Hazardous Materials Transportation; Miscellaneous Revisions to Registration and Fee Assessment Program

AGENCY: Pipeline and Hazardous Materials Safety Administration (PHMSA), DOT.

ACTION: Withdrawal of notice of proposed rulemaking.

SUMMARY: The Pipeline and Hazardous Materials Safety Administration (PHMSA) is withdrawing the notice of proposed rulemaking published under this docket on May 5, 2008 (73 FR 24519). Our revised estimates of unexpended balances from previous years and revenues expected to be generated at current registration fee levels indicate that an increase in registration fees is not necessary to fund the national Hazardous Materials Emergency Preparedness (HMEP) grants program at its authorized level of $28,318,000 for Fiscal Year 2009.

FOR FURTHER INFORMATION CONTACT: Deborah Boothe, Office of Hazardous Materials Standards, (202) 366–8553, or David Donaldson, Office of Hazardous Materials Planning and Analysis, (202) 366–4484, Pipeline and Hazardous Materials Safety Administration, U.S. Department of Transportation.

SUPPLEMENTARY INFORMATION:

I. Background

The Hazardous Materials Emergency Preparedness (HMEP) grants program, as mandated by 49 U.S.C. 5116, provides Federal financial and technical assistance to States and Indian tribes to ''develop, improve, and carry out emergency plans'' within the National Response System and the Emergency Planning and Community Right-To-Know Act of 1986 (Title III), 42 U.S.C. 11001 *et seq.* The grants are used to develop, improve, and implement emergency plans; to train public sector hazardous materials emergency response employees to respond to accidents and incidents involving hazardous materials; to determine flow patterns of hazardous materials within a State and between States; and to determine the need within a State for regional hazardous materials emergency response teams. The HMEP grants program is funded by registration fees collected from persons who offer for transportation or transport certain hazardous materials in intrastate, interstate, or foreign commerce.

Congress reauthorized the Federal hazardous materials transportation law (Federal hazmat law; 49 U.S.C. 5101 *et seq.*) in 2005. The Hazardous Materials Transportation Safety and Security Reauthorization Act of 2005 (Title VII of the Safe, Accountable, Flexible, Efficient Transportation Equity Act—A Legacy for Users, Pub. L. 109–59, 119 Stat. 1144, Aug. 10, 2005) authorizes $28.3 million per year for the HMEP grants program and lowered the maximum registration fee from $5,000 to $3,000. The Consolidated Appropriations Act of 2008 (Pub. L. 110–161, 121 Stat. 2404, Dec. 26, 2007) set an obligation limitation of $28,318,000 for expenses from the HMEP fund, and the Administration's Fiscal Year 2009 budget requests $28,300,000 in support of HMEP activity.

II. Current Rulemaking

To ensure full funding of the HMEP grants program for FY 2009, PHMSA proposed an increase in registration fees to fund the program at the $28.3 million level (73 FR 24519, May 5, 2008). For those registrants not qualifying as a small business or not-for-profit organization, we proposed to increase the registration fee from $975 (plus a $25 administrative fee) to $2,475 (plus a $25 administrative fee) for registration year 2009–2010 and following years. As explained in the NPRM, an existing surplus enabled us to delay an increase in registration fees, but we concluded that we would not be able to fund the HMEP grants program at the $28.3 million level in Fiscal Year 2009 without an increase.

We received 13 written comments in response to the NPRM from shippers and carriers and from the emergency response community, including the American Trucking Association (ATA), Council on the Safe Transportation of Hazardous Articles (COSTHA), Institute of Makers of Explosives (IME), International Association of Fire Chiefs (IAFC), National Association of SARA Title III Program Officials (NASTTPO), and Vessel Operators Hazardous Materials Association, Inc. (VOHMA).

We have recently re-examined our estimates for funding the HMEP grants program based on updated information from the Department of Treasury on the HMEP account carry-over balance, de-obligations of unused grant and administrative funds, increased enforcement of the registration requirements, and current registrant data, and we have further refined our estimates of revenues we anticipate collecting for registration years 2008–2009 (covering July 1, 2008 to June 30, 2009) and 2009–2010 (covering July 1, 2009 to June 30, 2010) at current registration fee levels. Based on this analysis, we have concluded that we will be able to fund the HMEP grants program at the $28.3 million level in Fiscal Year 2009 without an increase in registration fees. Accordingly, PHMSA is withdrawing the May 5, 2008, NPRM and terminating this rulemaking proceeding. Depending on appropriated and available funding for Fiscal Year 2010, we may initiate a future rulemaking to adjust registration fees for future registration years.

Issued in Washington, DC, on June 9, 2009 under authority delegated in 49 CFR part 106.

Theodore L. Willke,

Associate Administrator for Hazardous Materials Safety.

[FR Doc. E9–14569 Filed 6–19–09; 8:45 am]

BILLING CODE 4910–60–P

DEPARTMENT OF THE INTERIOR

Fish and Wildlife Service

50 CFR Part 17

[FWS–R6–ES–2009–0037; 92210–1117–0000–B4]

Endangered and Threatened Wildlife and Plants; 90-Day Finding on a Petition To Revise Critical Habitat for Eriogonum pelinophilum (Clay-Loving Wild Buckwheat)

AGENCY: Fish and Wildlife Service, Interior.

ACTION: Notice of 90-day petition finding and initiation of critical habitat review.

SUMMARY: We, the U.S. Fish and Wildlife Service (USFWS), announce a 90–day finding on a petition to revise critical habitat for *Eriogonum pelinophilum* (clay-loving wild buckwheat) under the Endangered

Species Act (Act) of 1973, as amended. Following a review of the petition, we find that the petition presents substantial scientific or commercial information indicating that revision of the critical habitat for *E. pelinophilum* may be warranted. Therefore, with the publication of this notice, we are initiating a review of the critical habitat for the species, and will subsequently issue a 12-month finding to determine if revisions to the species' critical habitat are warranted. To ensure that the review is comprehensive, we are soliciting scientific and commercial data and other information regarding this species.

DATES: The finding announced in this document was made on June 22, 2009. To be considered in the 12-month finding for this petition to revise critical habitat, data and information must be submitted to us by July 22, 2009.

ADDRESSES: You may submit information by one of the following methods:

- Federal rulemaking Portal: *http://www.regulations.gov*. Follow the instructions for submitting comments to Docket No. FWS–R6–ES–2009–0037.
- U.S. mail or hand-delivery: Public Comments Processing, Attn: FWS–R6–ES–2009–0037; Division of Policy and Directives Management; U.S. Fish and Wildlife Service; 4401 N. Fairfax Drive, Suite 222; Arlington, VA 22203.

We will post all information received on *http://www.regulations.gov*. This generally means that we will post any personal information you provide us (see the **Information Solicited** section below for more details).

FOR FURTHER INFORMATION CONTACT: Patty Gelatt, Acting Western Colorado Supervisor, U.S. Fish and Wildlife Service, Ecological Services, 764 Horizon Drive, Building B, Grand Junction, CO 81506–3946, by telephone (970–243–2778), or by facsimile (970–245–6933). People who use a telecommunications device for the deaf (TDD) may call the Federal Information Relay Service (FIRS) at 800–877–8339.

SUPPLEMENTARY INFORMATION:

Information Solicited

When we make a finding that a petition presents substantial information indicating that revisions to critical habitat may be warranted, we are required to promptly commence a review of the status of the existing critical habitat determination. To ensure that this review of critical habitat is complete and based on the best available science and commercial information, we are soliciting additional information for *Eriogonum pelinophilum*. We request information from the public, other concerned governmental agencies, Native American Tribes, the scientific community, industry, agriculture, or any other interested parties concerning the status of critical habitat for *E. pelinophilum*. We are seeking information regarding:

(1) The historical and current status and distribution of *E. pelinophilum*, its biology and ecology, and ongoing conservation measures for the species and its habitat;

(2) Physical and biological features essential to the conservation of the species; and

(3) Information on threats to the species and its habitat.

Please note that submissions merely stating support or opposition to the actions under consideration without providing supporting information, although noted, will not be considered in making a determination; section 4(b)(2) of the Act directs that determinations as to whether critical habitat shall be revised shall be made ''solely on the basis of the best scientific data available and after taking into consideration the economic impact, and any other relevant impact, of specifying any particular area as critical habitat.'' At the conclusion of the critical habitat review, we will issue a 12-month finding on the petition, as provided in section 4(b)(3)(D)(ii) of the Act.

You may submit your information concerning this critical habitat review by one of the methods listed in the **ADDRESSES** section.

If you submit information via *http://www.regulations.gov*, your entire submission—including any personal identifying information—will be posted on the website. If your submission is made via a hardcopy that includes personal identifying information, you may request at the top of your document that we withhold this information from public review. However, we cannot guarantee that we will be able to do so. We will post all hardcopy submissions on *http://www.regulations.gov*. Please include sufficient information with your comments to allow us to verify any scientific or commercial information you provide.

Information and materials we receive, as well as supporting documentation we used in preparing this 90–day finding, will be available for public inspection on *http://www.regulations.gov*, or by appointment during normal business hours, at the U.S. Fish and Wildlife Service, Western Colorado Ecological Services Office (see **FOR FURTHER INFORMATION CONTACT**).

Background

Section 4(b)(3)(D) of the Act of 1973, as amended (16 U.S.C. 1531 *et seq.*), requires that we make a finding on whether a petition to revise critical habitat for a species presents substantial scientific or commercial information indicating that the petitioned action may be warranted. We are to base this finding on information provided in the petition, supporting information submitted with the petition, and information otherwise available in our files. To the maximum extent practicable, we are to make this finding within 90 days of our receipt of the petition and publish our notice of the finding promptly in the **Federal Register**.

Our standard for substantial information within the Code of Federal Regulations (CFR) with regard to a 90-day petition finding is ''that amount of information that would lead a reasonable person to believe that the measure proposed in the petition may be warranted'' (50 CFR 424.14(b)). If we find that substantial scientific or commercial information was presented, we are required to promptly commence a review of the species' critical habitat.

Previous Federal Actions

Eriogonum pelinophilum was proposed for listing as an endangered species on June 22, 1983, and critical habitat was proposed concurrently (48 FR 28504). The final rule designating the species as endangered, and designating 119.8 acres (ac) (48.5 hectares (ha)), the known range of the species at that time, was published on July 13, 1984 (49 FR 28562). Critical habitat for this species is set forth at 50 CFR 17.96(a) under the Family Polygonaceae. The currently designated critical habitat is in Delta County, Colorado.

On July 24, 2006, we received a petition, dated July 17, 2006, from the Center for Native Ecosystems, the Colorado Native Plant Society, and the Uncompahgre Valley Association (collectively referred to as the petitioners) requesting that we revise the critical habitat designation for *Eriogonum pelinophilum*. The petition clearly identified itself as a petition and included the requisite identification information for the petitioners as required in 50 CFR 424.14(a). The petition contained a species and habitat description for *E. pelinophilum*, a description of previous Federal actions, a section addressing statutory requirements for *E. pelinophilum*, a description of the various populations and their status, a section addressing

threats to *E. pelinophilum*, and recommendations regarding critical habitat for the species. Potential threats discussed in the petition include destruction and modification of habitat, threats from herbivory, and threats from inadequate regulatory mechanisms.

On September 29, 2006, we acknowledged the receipt of the petition but stated that given staff and budget limitations we would not be able to further address the petition at that time. On November 13, 2006, we received a notice of intent to sue dated November 9, 2006, from the petitioners regarding our failure to make a 90-day finding on the petition to revise *Eriogonum pelinophilum* critical habitat. On March 3, 2008, the petitioners filed suit with the United States District Court for the District of Colorado for our failure to make a 90-day finding on the petition to revise critical habitat for the species. On September 30, 2008, we reached a settlement agreement with the plaintiffs to submit a 90-day finding on the petition to revise critical habitat to the **Federal Register** by June 15, 2009, and, if the petition is considered substantial, submit a 12-month finding to the **Federal Register** by September 21, 2009. This 90-day finding evaluates the petition as stipulated in the settlement agreement.

Species Information

In 1958, *Eriogonum pelinophilum* was first collected near Hotchkiss, in Delta County, Colorado, by Howard Gentry. The species was first recognized as its own taxon in 1969, and officially described by James Reveal in 1973 (Reveal 1969, pp. 75–76; 1973, pp. 120–122). No other locations were identified until 1984 (Colorado Natural Heritage Program (CNHP) 1986, p. 1).

Eriogonum pelinophilum is a low-growing, rounded, densely branched subshrub (low shrub with ground-hugging stems) in the buckwheat family (Polygonaceae), with dark green, inrolled leaves that appear needlelike, and clusters of white to cream colored flowers with greenish-red to brownish-red bases and veins at the end of the branches. The *Eriogonum* genus has undergone rapid evolution in the arid regions of the West, and, as a native North American genus, is second only to the *Penstemon* (beardtongue) in number of species (roughly 250 *Eriogonum* species) (Reveal 2005a, p. 1).

Eriogonum pelinophilum is estimated to live between 20 and 50 years (NatureServe 2008, p. 5). Flowering typically occurs from late May to early September with individual flowers lasting fewer than 3 days (Bowlin *et al.* 1992, p. 298). Reproduction requires a pollinator. Over 50 species of insects visit *E. pelinophilum* flowers; approximately 25 are native bees, and 18 are native ants (Bowlin *et al.* 1992, pp. 299–300). Some fruits are removed by harvester ants (Bowlin *et al.* 1992, p. 299); however, no information is available on species that may disperse seeds.

Eriogonum pelinophilum has been considered a close relative of, or synonymous with, *E. clavellatum* and a close relative of *E. contortum* (Reveal 2006, p. 3). The species is currently recognized as a distinct species (Reveal 2005b, p. 1; Kartesz *in litt.* 2009, p. 1). *E. pelinophilum* is allied to, but distinct from, *E. clavellatum*, and both are distinct from *E. contortum* (Reveal 2006, p. 3). Morphological and distributional differences also occur between *E. pelinophilum, E. contortum*, and *E. clavellatum. E. pelinophilum* has white flowers and occurs in Delta and Montrose Counties, Colorado; *E. contortum* has yellow flowers and occurs farther north in Mesa and Garfield Counties, Colorado, and Grand County, Utah (Spackman *et al.* 1997, *E. pelinophilum* page). *E. pelinophilum* is shorter, measuring 2 to 4 inches (in) (0.5 to 1 decimeters (dm)), has smaller involucres (bracts below the flowers) of 0.12 to 0.14 in (3 to 3.5 millimeters (mm)), with petals all the same length. *E. clavellatum* is taller measuring 4 to 8 in (1 to 2 dm), has larger involucres, 0.16 to 0.18 in (4 to 4.5 mm), with two different sized petals, and is only known from Montezuma County, Colorado, and adjacent San Juan Mountain Counties in Utah and New Mexico (Spackman *et al.* 1997, *E. pelinophilum* page; Reveal 2005c, p. 1).

Critical Habitat

Background

Critical habitat is defined in section 3(5)(A) of the Act as:

(i) The specific areas within the geographical area occupied by the species, at the time it is listed in accordance with the Act, on which are found those physical or biological features

(I) essential to the conservation of the species and

(II) which may require special management considerations or protection; and

(ii) specific areas outside the geographical area occupied by the species at the time it is listed, upon a determination that such areas are essential for the conservation of the species.

Conservation, as defined under section 3(3) of the Act, means the use of all methods and procedures that are necessary to bring any endangered of threatened species to the point at which the measures provided under the Act are no longer necessary. Such methods and procedures include, but are not limited to, all activities associated with scientific resources management such as research, census, law enforcement, habitat acquisition and maintenance, propagation, or transplantation.

Critical habitat receives protection under section 7 of the Act through the prohibition against Federal agencies carrying out, funding, or authorizing the destruction or adverse modification of critical habitat. Section 7(a)(2) of the Act requires consultation on Federal actions that may affect critical habitat. The designation of critical habitat does not affect land ownership or establish a refuge, wilderness, reserve, preserve, or other conservation area. Such designation does not allow the government or public to access private lands. Such designation does not require implementation of restoration, recovery, or enhancement measures by private landowners. Where a landowner requests Federal agency funding or authorization for an action that may affect a listed species or critical habitat, the consultation requirements of section 7(a)(2) would apply, but even in the event of a destruction or adverse modification finding, the landowner's obligation is not to restore or recover the species, but to implement reasonable and prudent alternatives to avoid destruction or adverse modification of critical habitat.

For inclusion in a critical habitat designation, habitat within the geographical area occupied by the species must contain the physical and biological features essential to the conservation of the species, and be included only if those features may require special management considerations or protection. Critical habitat designations identify, to the extent known using the best scientific and commercial data available, habitat areas containing the essential physical and biological features that provide for requisite life cycle needs of the species (areas on which are found the primary constituent elements (PCEs) laid out in the appropriate quantity and spatial arrangement for the conservation of the species). Under the Act and regulations at 50 CFR 424.12, we can designate critical habitat in areas outside the geographical area occupied by the species at the time it is listed only when we determine that those areas are essential for the conservation of the species and that designation limited to those areas occupied at the time of

listing would be inadequate to ensure the conservation of the species.

Section 4 of the Act requires that we designate critical habitat on the basis of the best scientific and commercial data available. Further, our Policy on Information Standards Under the Endangered Species Act (published in the **Federal Register** on July 1, 1994 (59 FR 34271)), the Information Quality Act (section 515 of the Treasury and General Government Appropriations Act for Fiscal Year 2001 (Pub. L. 106–554; H.R. 5658)), and our associated Information Quality Guidelines, provide criteria, establish procedures, and provide guidance to ensure that our decisions are based on the best scientific data available. They require our biologists, to the extent consistent with the Act and with the use of the best scientific data available, to use primary and original sources of information as the basis for recommendations to designate critical habitat.

Habitat Information

Eriogonum pelinophilum is endemic to the rolling clay (adobe) hills and flats immediately adjacent to the communities of Delta and Montrose, Colorado. The plants extend from near Lazear, east of Delta, on the northern end of the species' range, to the southeastern edge of Montrose in Delta and Montrose Counties, Colorado, and occur from 5,180 to 6,350 feet (ft) (1,579 to 1,965 meters (m)) in elevation (CNHP 2006, p. 3; 2009, spatial data; NatureServe 2008, pp. 4–5; USFWS 2009, Table 1). The known occurrences exist within an area roughly 11.5 miles (mi) (18.5 kilometers (km)) by 28.5 mi (45.6 km) (CNHP 2009, spatial data). The area where *E. pelinophilum* occurs is dry, receiving an average of 8 to 9 in. (20 to 23 centimeters (cm)) of precipitation a year (Western Regional Climate Center 2009a, p. 1; 2009b, p. 1). The soils where *E. pelinophilum* is found are described as whitish, alkaline (pH over 7), clay soils of the Mancos shale formation. They are part of the Billings Series, known for their fine texture and weak, unstable structure (NatureServe 2008, p. 4). In addition, the soils are calcareous (containing calcium carbonate). Plants are generally found within swales or drainages where there is more moisture than surrounding areas. These swales are generally located in low-lying areas that have rolling topography, and steeper, more barren slopes above them. Plants near Delta at lower elevation areas are associated with small areas where snow lingers because of north- and east-facing aspects (Ewing and Glenne 2009, p. 2).

Eriogonum pelinophilum occurs in plant communities characterized by low species diversity, low productivity, and minimal canopy cover (NatureServe 2008, p. 4). The associated vegetation is sparse, with *E. pelinophilum* generally one of the dominant species (CNHP 1987, Table 2). In lower elevations near Delta, the dominant plant species is *Atriplex corrugata* (mat saltbrush); at higher elevations near Montrose, the dominant plant species is *Artemesia nova* (black sagebrush), although *A. corrugata* is still abundant (Southwest Regional Gap Analysis Project 2004, spatial data). Other species associated with *E. pelinophilum* include *Atriplex confertifolia* (shadscale), *Atriplex gardneri* (Gardner's saltbush), *Picrothamnus desertorum* (formerly *Artemisia spinescens*) (bud sagebrush), *Xylorhiza venusta* (charming woodyaster), and another local endemic, *Penstemon retrorsus* (Adobe Hills beardtongue) (CNHP 1987, Table 2; Coles 2006, p. 1; NatureServe 2008, p. 4).

In the following sections, several terms are used that refer to groupings of *Eriogonum pelinophilum*. Element Occurrences (EOs) are defined by Natural Heritage Programs as areas where a species is or was located. For *E. pelinophilum,* EO specifications have been developed that lump one to many polygons (sites) based on a standardized maximum separation distance, in this case 1.2 mi (2 km) across suitable habitat, and 0.6 mi (1 km) across unsuitable habitat (CNHP 2007, p. 1). We use the term 'sites' to define areas that contain an EO. EOs are meant to approximate populations. Although not explicitly stated, we believe that the populations cited by the petitioners are *E. pelinophilum* EOs identified as of 2006.

Evaluation of Information Contained in the Petition

The petitioners state that 16 populations of *Eriogonum pelinophilum* existed in 2006, containing 30,000 to 60,000 individuals total, and that 8 historical occurrences have been fully extirpated (Reveal 2006, p. 2). The petitioners describe general threats to the species' habitat, and specific threats to each of the 16 *E. pelinophilum* populations. The petitioners give reasons why revising critical habitat for *E. pelinophilum* is prudent and determinable, and describe the need as immediate because several of the threats the species faces are growing in magnitude and immediacy. The petitioners claim that critical habitat must be revised because the currently designated habitat omits an area that is now known to contain the largest and most biologically important populations of the species. Further, they say that the current designation is inadequate for ensuring recovery of the species. The petitioners made recommendations of critical habitat locations in their petition.

We used the information provided in the petition to assess the status of *Eriogonum pelinophilum*. We also used information in our files, including the annual report we receive each January from the Colorado Natural Heritage Program (CNHP 2009, pp. 1–81), new *E. pelinophilum* locations from BIO-Logic Environmental (TriState 2004, map; Boyle *in litt.* 2009, map), and geospatial layers. Geospatial layers included land ownership, locations of conservation easements, and locations of BLM Areas of Critical Environmental Concern.

Population Status

According to CNHP, 20 *Eriogonum pelinophilum* EOs currently exist (CNHP 2009, pp. 1–81; USFWS 2009, Table 1). Of these 20 EOs, 7 have not been located again in over 20 years and are considered historical. A survey was conducted at an additional EO (015), where no plants were found (CNHP 2009, pp. 1–81; USFWS 2009, Table 1). The petitioners cite a map showing seven extirpated *E. pelinophilum* locations (Reveal 2006, p. 2). These locations are not included in the CNHP database. We have no information on how these extirpations were determined, their exact locations, if they were portions of other EOs, or how many plants were lost; therefore, they are not included in our assessments of populations.

We are aware of two additional populations of *Eriogonum pelinophilum* that are not incorporated into the CNHP database, and that, based on appropriate separation distances, would comprise two new EOs (see Table 1). One site has fewer than 100 plants and the other site has an estimated 500 plants (TriState 2004, map; Boyle *in litt.* 2009, map). Table 1 provides a comparison of populations cited by the petitioners to known EOs, and land management or ownership status.

Of the 12 EOs where *Eriogonum pelinophilum* is currently known to exist (not counting the 2 newly discovered EOs), 2 are ranked by CNHP as A, 6 are ranked as B, 3 are ranked as C, and 1 is ranked as D (CNHP 2009, pp. 1–81; USFWS 2009, Table 1). An A rank represents *E. pelinophilum* occurrences with the largest size, highest number of individuals, and the best-quality habitat; a D rank represents occurrences with the smallest size, the lowest number of

individuals, and the worst-quality habitat (CNHP 2007, pp. 1–2; 2009, pp. 1–81; USFWS 2009, Table 1).

TABLE 1. COLORADO NATURAL HERITAGE PROGRAM (CNHP) *Eriogonum pelinophilum* ELEMENT OCCURRENCES (EOS) COMPARED WITH POPULATIONS CITED IN THE PETITION. RANKS A, B, C, AND D REPRESENT THE QUALITY OF THE EO (FROM BEST- TO WORST-QUALITY, RESPECTIVELY); H INDICATES AN EO HAS NOT BEEN VISITED IN OVER 20 YEARS; AND F INDICATES AN EO THAT COULD NOT BE FOUND DURING SUBSEQUENT VISITS. INCLUDED ARE TWO NEWLY DISCOVERED EOS NOT YET NUMBERED BY CNHP, SEVEN HISTORICAL EOS, AND ONE EO IN WHICH NO PLANTS WERE RECENTLY FOUND (015).

EO Number	EO Rank	Petition Population	Land Management, with Rough Estimates of Ownership Percentage
001	B	a, Lawhead Gulch	private
003	B	d, North Selig Canal	33% BLM–66% private
004	B	g, Olathe South	private
006	B	h, North Mesa	private
011	C	i, North Fairview	50% BLM–50% private
012	B	n, Sunshine Road	5% BLM–95% private
014	A	f, Candy Lane/Peach Valley	BLM
016	C	p, Dry Cedar Creek	BLM
018	A	o, Wacker Ranch/Fairview South	70% BLM–20% Colorado State (CNAP)–10% private
024	D	j, Montrose Northeast	private
025	B	e, Selig Canal	90% BLM–10% private
041	B	new, discovered in 2007	66% BLM–33% private
none	none	new, discovered in 2004	33% BLM–66% private
none	none	new, discovered in 2008	BLM
015	F	considered extirpated in petition	private
007	H, C	b, Peach Valley	private
013	H, C	l, Cedar Creek	private
017	H, C	m, Oak Grove Road	private
019	H, C	c, Star Nelson Airport	private
021	H, C	k, Montrose East	private
022	H, C	k, Montrose East	private
023	H, C	not included in petition	unknown

The most recent rangewide population estimate for all *Eriogonum pelinophilum* EOs ranked A through D, which does not include the two newly discovered populations, is 276,000 individuals on 575 ac (233 ha) of currently occupied habitat (CNHP 2009, pp. 1–81; USFWS 2009, Table 1). Roughly 46 percent of the habitat is in private ownership, and 54 percent is managed by either the Bureau of Land Management (BLM) or Colorado Natural Areas Program (CNAP) (CNHP 2009, pp. 1–81; USFWS 2009, Table 1). Approximately 14 percent of the total currently occupied habitat is covered by conservation easements, located on privately owned land. Of the 14 known *E. pelinophilum* EOs, including the 2 newly discovered populations, 4 occur wholly on private land; 6 occur on a combination of BLM and private lands; 1 occurs on BLM Colorado State (Colorado Natural Areas), and private lands; and 3 occur wholly on BLM land (see Table 1).

We attribute the large difference between the rangewide population estimate from the 2006 petition (30,000 to 60,000 individuals; Reveal 2006, p. 2), and our 2009 estimate (276,000 individuals), to increased survey efforts that occurred in 2007 near Fairview South (EO 018), where the known locations of *Eriogonum pelinophilum* and number of individuals greatly increased (CNHP 2009, EO 18; Ferguson 2007, pp. 2, 4). Survey intensity has not been consistent in the different EOs, so plant numbers at each EO may not be representative of the true abundance. As a general rule, plant estimates that are not based on a sampling protocol tend to underestimate the number of individuals at any given location.

Critical Habitat Evaluation

The existing critical habitat for *Eriogonum pelinophilum,* as designated in 1984, encompasses 119.8 ac (48.5 ha) and one population (Lawhead Gulch, EO 001), which was then the entire known range of the species (49 FR 28565). Within that designation, only about 65 ac (26 ha) of habitat remains occupied (based on a geospatial analysis); approximately 2,000 individual plants persist. By comparing to currently known CNHP EOs, the critical habitat designation for *E. pelinophilum* includes approximately 65 of 575 ac (26 of 233 ha) of currently occupied habitat, or only 11 percent, and 2,000 of 276,000 individuals, or only 0.7 percent (USFWS 2009, Table 1).

Finding

In making this finding, we relied on information provided by the petitioners, sources cited by the petitioners, and information readily available in our files. We evaluated that information in accordance with 50 CFR 424.14(c). Our process for making this 90-day finding under section 4(b)(3)(D) of the Act and section 50 CFR 424.14(c) of our regulations is limited to a determination of whether the information in the petition meets the ''substantial scientific and commercial information'' threshold.

We have assessed information provided by the petitioners and available in our files. The critical habitat designation from 1984 includes approximately 11 percent of habitat known to be currently occupied and 0.7 percent of individual *Eriogonum pelinophilum* plants. In addition, *E. pelinophilum* has special protections in portions of only four extant EOs (on four private land sites); roughly a third of all the known areas currently occupied by the species is on private land with no protections from destruction or adverse modification of habitat.

Under section 3 of the Act, critical habitat is to include the areas essential to the conservation of the species. Conservation is intended to bring the species to the point at which the

measures provided under the Act are no longer necessary, i.e., the species is recovered. Critical habitat designations identify, to the extent known and using the best scientific and commercial data available, habitat areas containing the essential physical and biological features that provide for requisite life cycle needs of the species (areas on which are found the PCEs laid out in the appropriate quantity and spatial arrangement for the conservation of the species). The petitioners have presented substantial information to indicate that the critical habitat for *Eriogonum pelinophilum,* as designated, may not represent the entire area containing the physical and biological features essential to the conservation of the species. Only a small proportion of the currently known habitat and individuals are included, only the northernmost portion of the species' range is represented, and areas outside of the designation are only provided special protections in portions of 4 of the remaining 13 populations. Habitat is often dynamic, and a species' range may move from one area to another over time. We recognize that critical habitat designated at a particular point in time may not include all of the habitat areas we may later determine are necessary for the recovery of the species. The known habitat areas occupied by *E. pelinophilum* have changed since critical habitat designation, and identification and designation of currently known occupied habitat may be essential to the conservation of the species.

On the basis of our evaluation of new occupied sites provided in the petition and in our files, we find that the petition presents substantial information indicating that revising critical habitat for *Eriogonum pelinophilum* under the Act may be warranted. Therefore, we are initiating a status review to determine if a revision to critical habitat for *E. pelinophilum* is warranted under the Act, and if so, how we would intend to proceed with such a revision.

References Cited

A complete list of all references cited in this document is available, upon request, from the Western Colorado Ecological Services Office (see **FOR FURTHER INFORMATION CONTACT**).

Author

The primary authors of this notice are the staff members of the U.S. Fish and Wildlife Service, Western Colorado Ecological Services Office (see **FOR FURTHER INFORMATION CONTACT**).

Authority

The authority for this action is the Endangered Species Act of 1973, as amended (16 U.S.C. 1531 *et seq.*).

Dated: June 15, 2009

Rowan W. Gould

Acting Director, U.S. Fish and Wildlife Service

[FR Doc. E9–14709 Filed 6–19–09; 8:45 am]

BILLING CODE 4310–55–S

Notices

Federal Register
Vol. 74, No. 118
Monday, June 22, 2009

This section of the FEDERAL REGISTER contains documents other than rules or proposed rules that are applicable to the public. Notices of hearings and investigations, committee meetings, agency decisions and rulings, delegations of authority, filing of petitions and applications and agency statements of organization and functions are examples of documents appearing in this section.

DEPARTMENT OF AGRICULTURE

Submission for OMB Review; Comment Request

June 16, 2009.

The Department of Agriculture has submitted the following information collection requirement(s) to OMB for review and clearance under the Paperwork Reduction Act of 1995, Public Law 104–13. Comments regarding (a) Whether the collection of information is necessary for the proper performance of the functions of the agency, including whether the information will have practical utility; (b) the accuracy of the agency's estimate of burden including the validity of the methodology and assumptions used; (c) ways to enhance the quality, utility and clarity of the information to be collected; (d) ways to minimize the burden of the collection of information on those who are to respond, including through the use of appropriate automated, electronic, mechanical, or other technological collection techniques or other forms of information technology should be addressed to: Desk Officer for Agriculture, Office of Information and Regulatory Affairs, Office of Management and Budget (OMB), *OIRA_Submission @OMB.EOP.GOV* or fax (202) 395–5806 and to Departmental Clearance Office, USDA, OCIO, Mail Stop 7602, Washington, DC 20250–7602. Comments regarding these information collections are best assured of having their full effect if received within 30 days of this notification. Copies of the submission(s) may be obtained by calling (202) 720–8681.

An agency may not conduct or sponsor a collection of information unless the collection of information displays a currently valid OMB control number and the agency informs potential persons who are to respond to the collection of information that such persons are not required to respond to the collection of information unless it displays a currently valid OMB control number.

Rural Business Service

Title: 7 CFR 4287–B, ''Servicing Business and Industry Guaranteed Loans.''

OMB Control Number: 0570–0016.

Summary of Collection: The Business and Industry (B&I) program was legislated in 1972 under section 310B of the Consolidated Farm and Rural Development Act, as amended (the Act). The purpose of the B&I program, as authorized by the Act, is to improve economic and environmental climate in rural communities, including pollution abatement and control. This purpose is achieved through bolstering the existing private credit structure through the guaranteeing of quality loans, which will provide lasting community benefits. The B&I program is administered by the Rural Business Service (RBS) through Rural Development State and sub-State offices serving each State. RBS will collect information using various forms from the lender and the borrower. This information is vital for making prudent financial decisions.

Need and Use of the Information: RBS will collect information to monitor the guaranteed loan portfolio to ensure that the lenders are adequately servicing the loans. RBS through its respective Business Programs Divisions in Washington, DC and its 47 State Offices throughout the United States will be the primary users of the information collected. If the information is not collected, RBS would not be able to make prudent credit decisions nor would the Agency be able to effectively monitor the lender's servicing activities and thus minimize losses under the program.

Description of Respondents: Business or other for-profit; State, Local or Tribal Government.

Number of Respondents: 12,730.

Frequency of Responses: Reporting: On occasion; Quarterly; Annually.

Total Burden Hours: 18,223.

Rural Business Service

Title: 7 CFR 4279–A, Guaranteed Loan-making General.

OMB Control Number: 0570–0018.

Summary of Collection: The Business and Industry (B&I) program was legislated in 1972 under section 310B of the Consolidated Farm and Rural Development Act, as amended. The purpose of the program is to improve, develop, or finance businesses, industries, and employment and improve the economic and environmental climate in rural communities. This purpose is achieved through bolstering the existing private credit structure through the guaranteeing of quality loans made by lending institutions, thereby providing lasting community benefits. The B&I program is administered by the RBS through Rural Development State and sub-State offices serving each state.

Need and Use of the Information: RBS will collect information to determine eligibility and credit worthiness for a lender or borrower. The information is used by Agency loan officers and approval officials to determine lender program eligibility and for program monitoring.

Description of Respondents: Business or other for-profit; State, Local or Tribal Government.

Number of Respondents: 1,037.

Frequency of Responses: Reporting: On occasion.

Total Burden Hours: 1,494.

Charlene Parker,

Departmental Information Collection Clearance Officer.

[FR Doc. E9–14532 Filed 6–19–09; 8:45 am]

BILLING CODE 3410–XT–P

DEPARTMENT OF AGRICULTURE

Submission for OMB Review; Comment Request

June 16, 2009.

The Department of Agriculture has submitted the following information collection requirement(s) to OMB for review and clearance under the Paperwork Reduction Act of 1995, Public Law 104–13. Comments regarding (a) whether the collection of information is necessary for the proper performance of the functions of the agency, including whether the information will have practical utility; (b) the accuracy of the agency's estimate of burden including the validity of the methodology and assumptions used; (c) ways to enhance the quality, utility and clarity of the information to be collected; (d) ways to minimize the burden of the collection of information

on those who are to respond, including through the use of appropriate automated, electronic, mechanical, or other technological collection techniques or other forms of information technology should be addressed to: Desk Officer for Agriculture, Office of Information and Regulatory Affairs, Office of Management and Budget (OMB), *OIRA_Submission @OMB.EOP.GOV* or fax (202) 395–5806 and to Departmental Clearance Office, USDA, OCIO, Mail Stop 7602, Washington, DC 20250–7602. Comments regarding these information collections are best assured of having their full effect if received within 30 days of this notification. Copies of the submission(s) may be obtained by calling (202) 720–8681.

An agency may not conduct or sponsor a collection of information unless the collection of information displays a currently valid OMB control number and the agency informs potential persons who are to respond to the collection of information that such persons are not required to respond to the collection of information unless it displays a currently valid OMB control number.

National Agricultural Statistics Service

Title: Floriculture Survey.

OMB Control Number: 0535–0093.

Summary of Collection: The primary function of the National Agricultural Statistics Service (NASS) is to prepare current official state and national estimates of crop and livestock production. Since 1985 Congress has provided funds to conduct an annual Commercial Floriculture Survey which obtains data on this important and growing industry. General authority for these data collection activities is granted under U.S. Code Title 7, Section 2204. This statute specifies that ''The Secretary of Agriculture shall procure and preserve all information concerning agriculture which can be obtained by the collection of statistics * * * and shall distribute them among agriculturists''. The floriculture industry accounted for more than $8.6 billion in agricultural cash receipts at the U.S. level.

Need and Use of the Information: NASS will collect information to assess alternative agriculture opportunities. Data from the survey will provide statistics for Federal and State agencies to monitor the use of agricultural chemicals. If the information is not collected, data users could not keep abreast of changes.

Description of Respondents: Farms; Business or other for-profit.

Number of Respondents: 12,500.

Frequency of Responses: Reporting: Annually.

Total Burden Hours: 4,054.

Ruth Brown,

Departmental Information Collection Clearance Officer.

[FR Doc. E9–14533 Filed 6–19–09; 8:45 am]

BILLING CODE 3420–20–P

DEPARTMENT OF AGRICULTURE

Forest Service

Allegheny National Forest; Pennsylvania; Transition EIS

AGENCY: Forest Service, USDA.

ACTION: Notice of intent to prepare an environmental impact statement.

SUMMARY: The Forest Service is proposing to authorize reasonable access for site-specific proposals to develop reserved and outstanding mineral rights within the Allegheny National Forest, with provisions to mitigate impacts to surface resources. We are also proposing to use design criteria and a site-specific review process through this decision to authorize reasonable access for future site-specific proposals to develop reserved and outstanding mineral rights within the Allegheny National Forest, with provisions to mitigate impacts to surface resources.

DATES: Comments concerning the scope of the analysis must be received by August 21, 2009. The draft environmental impact statement is expected January 2010, and the final environmental impact statement is expected April 2010.

ADDRESSES: Send written comments to Anthony V. Scardina, Allegheny National Forest, 4 Farm Colony Drive, Warren, PA 16365. Comments may also be sent via e-mail to *comments-eastern-allegheny@fs.fed.us,* or via facsimile to 814–726–1465. Comments sent via email should use the subject line ''Transition EIS.''

Comments received in response to this solicitation, including names and addresses of those who comment, will be part of the public record for this proposed action. Comments submitted anonymously will be accepted and considered; however, anonymous comments may limit the respondents ability to participate in subsequent administrative review or judicial review.

FOR FURTHER INFORMATION CONTACT: Anthony V. Scardina, Allegheny National Forest, 4 Farm Colony Drive, Warren, PA 16365; (814) 728–6115 or *ascardina@fs.fed.us.*

Individuals who use telecommunication devices for the deaf (TDD) may call the Federal Information Relay Service (FIRS) at 1–800–877–8339 between 8 a.m. and 8 p.m., Eastern Time, Monday through Friday.

SUPPLEMENTARY INFORMATION: The Allegheny National Forest consists largely of land acquired from the private sector via purchase or donation. At the time of acquisition, ownership of oil and gas resources had often been conveyed to other private parties (''outstanding rights''), or reserved by the private seller or donor (''reserved rights''). As a result, ninety-three percent of the Forest is subject to outstanding or reserved oil and gas rights.

On April 9, 2009, the Forest Service, Forest Service Employees for Environmental Ethics (FSEEE), Allegheny Defense Project, and the Sierra Club filed a stipulation of dismissal, based upon a settlement agreement, with the U.S. District Court for the Western District of Pennsylvania (*FSEEE et al.* v. *Forest Service,* 08–323 (W.D. Pa.)). This lawsuit challenged the issuance of Notices to Proceed for development of reserved and outstanding mineral rights within the Allegheny National Forest without preparation of environmental analyses pursuant to the National Environmental Policy Act (NEPA) of 1969. The lawsuit was dismissed in May 2009.

Briefly, the settlement filed with the court included the processing of 54 oil and gas proposals for a total of 588 wells, 2 pipelines, and 1 seismic line using current review and approval procedures. Furthermore, the settlement established that the appropriate level of NEPA be conducted prior to authorization of future proposals.

The Allegheny National Forest is also in the process of preparing a supplemental environmental impact statement for the 2007 Forest Plan. This process responds to instructions in the February 15, 2008, decision by the Chief of the Forest Service on appeals of the Allegheny National Forest Revised Land and Resource Management Plan pertaining to design criteria associated with the development of reserved and outstanding mineral rights within the Allegheny National Forest. Information for this process can be found at *http://www.fs.fed.us/r9/forests/allegheny/* and by clicking on the link for the ANF 2007 Forest Plan Supplemental EIS.

Purpose and Need for Action

The purpose of this action is to authorize reasonable access for forest-

wide site-specific proposals to develop reserved and outstanding mineral rights within the Allegheny National Forest, with provisions to mitigate impacts to surface resources. The need to take such action includes:

1. To provide reasonable access to reserved and outstanding mineral rights beneath National Forest System lands of the Allegheny National Forest.

2. Mitigating impacts to surface resources of the Allegheny National Forest associated with providing reasonable access for development of reserved and outstanding mineral rights by applying Forest Plan design criteria and site-specific mitigations.

Proposed Action

The Forest Service is proposing to authorize reasonable access for site-specific proposals to develop reserved and outstanding mineral rights within the Allegheny National Forest, with provisions to mitigate impacts to surface resources.

We are also proposing to use design criteria and a site-specific review process through this decision to authorize reasonable access for future site-specific proposals to develop reserved and outstanding mineral rights within the Allegheny National Forest, with provisions to mitigate impacts to surface resources. We may approve future proposals consistent with the design criteria and review process, when and where appropriate, pursuant to 40 Code of Federal Regulations (CFR) 1506.3 and related regulations.

For purposes of scoping, this proposed action will be consistent with standards and guidelines in the 2007 Forest Plan Supplement Environmental Impact Statement proposed action.

The 2007 Forest Plan proposed action standards and guidelines, as well as site-specific information such as maps, number of wells, and approximate road mileage for the proposed action, can be found at *http://www.fs.fed.us/r9/forests/allegheny/* and by clicking on the link for the Transition EIS.

Possible Alternatives

Alternatives are likely to include authorization of reasonable access for site-specific proposals to develop reserved and outstanding mineral rights within the Allegheny National Forest, using the alternative standards and guidelines that are being considered as part of the current Allegheny National Forest Plan Supplemental Environmental Impact process and other site-specific mitigations as provisions to mitigate impacts to surface resources. Alternative standards and guidelines that are being considered can be found at *http://www.fs.fed.us/r9/forests/allegheny/* and by clicking on the link for the Transition EIS.

For the purpose of analysis and disclosure of environmental, social, and economic effects, denying reasonable access to reserved and outstanding mineral rights will serve as the No-action alternative. The No-action alternative will only serve as a baseline for comparing effects of other alternatives considered, as the Forest Service acknowledges that it lacks the legal authority to deny reasonable access to reserved and outstanding mineral rights without engaging in a taking of private property rights.

Lead and Cooperating Agencies

The lead agency for this proposal is the USDA Forest Service. The U.S. Environmental Protection Agency, U.S. Bureau of Land Management, and Pennsylvania Department of Environmental Protection will be invited to become cooperating agencies for this proposal.

Responsible Official

The Responsible Official for the decision is the Allegheny National Forest Supervisor, Leanne M. Marten.

Nature of Decision To Be Made

The decisions to be made by the Forest Supervisor are (1) what mitigations, if any, to apply in the authorization of reasonable access for site-specific proposals to develop reserved and outstanding mineral rights within the Allegheny National Forest; (2) what design criteria, review process, and mitigations, if any, to apply in the authorization of reasonable access for future site-specific proposals to develop reserved and outstanding mineral rights within the Allegheny National Forest.

Permits or Licenses Required

The Forest Service is not required to obtain any permits or licenses in order to implement this proposal.

Scoping Process

This Notice of Intent initiates the scoping process, which guides the development of the environmental impact statement. Public comment and involvement opportunities for this project can be found at *http://www.fs.fed.us/r9/forests/allegheny/*. Upon entering this Web site, there is a link for the Transition EIS that will provide information pertaining to this project.

It is important that reviewers provide their comments at such times and in such manner that they are useful to the agency's preparation of the environmental impact statement. Therefore, comments should be provided prior to the close of the comment period and should clearly articulate the reviewer's concerns and contentions. The submission of timely and specific comments can affect a reviewer's ability to participate in subsequent administrative appeal or judicial review.

Dated: June 16, 2009.

Leanne M. Marten,

Forest Supervisor.

[FR Doc. E9–14545 Filed 6–19–09; 8:45 am]

BILLING CODE 3410–11–P

DEPARTMENT OF AGRICULTURE

Rural Utilities Service

Oglethorpe Power Corporation, Inc.: Notice of Intent To Hold Public Scoping Meetings and Prepare an Environmental Impact Statement

AGENCY: Rural Utilities Service, USDA.

ACTION: Notice of intent to hold public scoping meetings and prepare two Environmental Impact Statements (EIS).

SUMMARY: The Rural Utilities Service (RUS) intends to hold public scoping meetings and prepare an Environmental Impact Statement (EIS) to meet its responsibilities under the National Environmental Policy Act (NEPA) and 7 CFR part 1794 in connection with potential impacts related to projects proposed by Oglethorpe Power Corporation (Oglethorpe) of Tucker, Georgia. The proposal consists of the construction of a 100-MW biomass power plant in Appling County near Baxley, Georgia. Oglethorpe is requesting RUS to provide financial assistance for the proposed action.

DATES: RUS will conduct a public scoping meeting in an open house format in order to provide information and solicit comments for the preparation of the EIS. The public meeting will be held on Wednesday, July 8, 2009 from 5:30–7:30 p.m. at Courthouse Annex at 69 Tippins Street, Baxley, Georgia 31513; telephone (912) 367–8100 in Baxley, Georgia. All written questions and comments must be received by RUS by July 22, 2009.

ADDRESSES: To send comments or for further information, contact Stephanie Strength, Environmental Protection Specialist, USDA Rural Development Utilities Programs, at 1400 Independence Avenue, SW., Stop 1571, Washington, DC 20250–1571, or e-mail *stephanie.strength@wdc.usda.gov*.

An Alternatives Report (AR) prepared by Oglethorpe will be available at the

public scoping meeting, at the Agency's address provided in this notice, at the Agency's Web site: *http://www.usda.gov/rus/water/ees/eis.htm* at Oglethorpe Power Corporation, 2100 East Exchange Place, Tucker, Georgia, and at the following locations:

Appling County Public Library, 244 E. Parker Street, Baxley, GA 31513, Phone: (912) 367–8103.

Warren County Public Library, 10 Warren Street, Warrenton, GA 30828, Phone: (706) 465–2656.

SUPPLEMENTARY INFORMATION: Oglethorpe proposes to construct a new 100-MW biomass power plant in Appling County near Baxley, Georgia. The proposal is to meet, in part, the future demand of Oglethorpe's Members to provide a reliable, long-term supply of renewable and sustainable energy. Oglethorpe is seeking financing from RUS for its investment. The proposal is classified in 7 CFR 1794.25 as requiring an EIS.

Prior to making a financial decision about whether to provide financial assistance for a proposal, RUS is required to conduct an environmental review under the NEPA in accordance with the Agency policies and procedures codified in 7 CFR part 1794. These regulations require the Agency to consider engineering alternatives including no action, load management, conservation measures, and reactive power supply.

Government agencies, private organizations, and the public, are invited to participate in the planning and analysis of the proposed projects. Representatives from the Agency and Oglethorpe will be available at the scoping meetings to discuss the environmental review process, describe the proposals, discuss the scope of environmental issues to be considered, answer questions, and accept comments. As part of its broad environmental review process, the Agency must take into account the effect of the proposal on historic properties in accordance with Section 106 of the National Historic Preservation Act and its implementing regulation, ''Protection of Historic Properties'' (36 CFR part 800). Pursuant to 36 CFR 800.2(d)(3), the Agency is using its procedures for public involvement under NEPA to meet its responsibilities to solicit and consider the views of the public during Section 106 review. Accordingly, comments submitted in response to scoping will inform Agency decision making in Section 106 review. Any party wishing to participate more directly with the Agency as a ''consulting party'' in Section 106 review may submit a written request to do so to the Agency contact at the above address.

Using information from the Alternatives Report and considering input provided by government agencies, private organizations, and the public, RUS and Oglethorpe, in consultation with the cooperating agencies, will determine the scope of the EIS. Notices announcing the availability of the Draft EIS will be published in the **Federal Register** and local newspapers.

Any final action by the Agency related to the proposal will be subject to, contingent upon, and in compliance with environmental review requirements and will be conducted as prescribed by the Agency's environmental policies and procedures (7 CFR part 1794).

Dated: June 12, 2009.

Mark S. Plank,

Director, Engineering and Environmental Staff, USDA Rural Utilities Service.

[FR Doc. E9–14561 Filed 6–19–09; 8:45 am]

BILLING CODE P

DEPARTMENT OF AGRICULTURE

Rural Utilities Service

Oglethorpe Power Corporation, Inc.: Notice of Intent To Hold Public Scoping Meetings and Prepare an Environmental Impact Statement

AGENCY: Rural Utilities Service, USDA.

ACTION: Notice of intent to hold public scoping meetings and prepare two Environmental Impact Statements (EIS).

SUMMARY: The Rural Utilities Service (RUS) intends to hold public scoping meetings and prepare an Environmental Impact Statement (EIS) to meet its responsibilities under the National Environmental Policy Act (NEPA) and 7 CFR part 1794 in connection with potential impacts related to projects proposed by Oglethorpe Power Corporation (Oglethorpe) of Tucker, Georgia. The proposal consists of the construction of a 100-MW biomass power plant in Appling County near Baxley, Georgia. Oglethorpe is requesting RUS to provide financial assistance for the proposed action.

DATES: RUS will conduct a public scoping meeting in an open house format in order to provide information and solicit comments for the preparation of the EIS. The public meeting will be held on Wednesday, July 8, 2009 from 5:30–7:30 p.m. at (Courthouse Annex at 69 Tippins Street, Baxley, Georgia 31513; telephone (912) 367–8100) in Baxley, Georgia. All written questions and comments must be received by RUS by July 22, 2009.

ADDRESSES: To send comments or for further information, contact Stephanie Strength, Environmental Protection Specialist, USDA Rural Development Utilities Programs, at 1400 Independence Avenue, SW., Stop 1571, Washington, DC 20250–1571, or e-mail *stephanie.strength@wdc.usda.gov.*

An Alternatives Report (AR) prepared by Oglethorpe will be available at the public scoping meeting, at the Agency's address provided in this notice, at the Agency's Web site: *http://www.usda.gov/rus/water/ees/eis.htm*, at Oglethorpe Power Corporation, 2100 East Exchange Place, Tucker, Georgia, and at the following locations:

Appling County Public Library, 244 E. Parker Street, Baxley, GA 31513, Phone: (912) 367–8103.

Warren County Public Library, 10 Warren Street, Warrenton, GA 30828, Phone: (706) 465–2656.

SUPPLEMENTARY INFORMATION: Oglethorpe proposes to construct a new 100-MW biomass power plant in Appling County near Baxley, Georgia. The proposal is to meet, in part, the future demand of Oglethorpe's Members to provide a reliable, long-term supply of renewable and sustainable energy. Oglethorpe is seeking financing from RUS for its investment. The proposal is classified in 7 CFR 1794.25 as requiring an EIS.

Prior to making a financial decision about whether to provide financial assistance for a proposal, RUS is required to conduct an environmental review under the NEPA in accordance with the Agency policies and procedures codified in 7 CFR part 1794. These regulations require the Agency to consider engineering alternatives including no action, load management, conservation measures, and reactive power supply.

Government agencies, private organizations, and the public, are invited to participate in the planning and analysis of the proposed projects. Representatives from the Agency and Oglethorpe will be available at the scoping meetings to discuss the environmental review process, describe the proposals, discuss the scope of environmental issues to be considered, answer questions, and accept comments. As part of its broad environmental review process, the Agency must take into account the effect of the proposal on historic properties in accordance with Section 106 of the National Historic Preservation Act and its implementing regulation, ''Protection of Historic Properties'' (36 CFR part

800). Pursuant to 36 CFR 800.2(d)(3), the Agency is using its procedures for public involvement under NEPA to meet its responsibilities to solicit and consider the views of the public during Section 106 review. Accordingly, comments submitted in response to scoping will inform Agency decision making in Section 106 review. Any party wishing to participate more directly with the Agency as a ''consulting party'' in Section 106 review may submit a written request to do so to the Agency contact at the above address.

Using information from the Alternatives Report and considering input provided by government agencies, private organizations, and the public, RUS and Oglethorpe, in consultation with the cooperating agencies, will determine the scope of the EIS. Notices announcing the availability of the Draft EIS will be published in the **Federal Register** and local newspapers.

Any final action by the Agency related to the proposal will be subject to, contingent upon, and in compliance with environmental review requirements will be conducted as prescribed by the Agency's environmental policies and procedures (7 CFR part 1794).

Dated: June 12, 2009.

Mark S. Plank,

Director, Engineering and Environmental Staff, USDA Rural Utilities Service.

[FR Doc. E9–14563 Filed 6–19–09; 8:45 am]

BILLING CODE 3510–15–P

DEPARTMENT OF AGRICULTURE

Forest Service

Ketchikan Resource Advisory Committee

AGENCY: Forest Service, USDA.

ACTION: Notice of meeting.

SUMMARY: The Ketchikan Resource Advisory Committee will meet in Ketchikan, Alaska, July 23, 2009. The purpose of this meeting is to discuss potential projects under the Secure Rural Schools and Community Self-Determination Act of 2008.

DATES: The meeting will be held July 23, 2009 at 6 p.m.

ADDRESSES: The meeting will be held at the Southeast Alaska Discovery Center Learning Room (back entrance), 50 Main Street, Ketchikan, Alaska. Send written comments to Ketchikan Resource Advisory Committee, c/o District Ranger, USDA Forest Service, 3031 Tongass Ave., Ketchikan, AK 99901, or electronically to Diane Daniels, RAC Coordinator at *ddaniels@fs.fed.us.*

FOR FURTHER INFORMATION CONTACT: Diane Daniels, RAC Coordinator Ketchikan-Misty Fiords Ranger District, Tongass National Forest, (907) 228–4105.

SUPPLEMENTARY INFORMATION: The meeting is open to the public. Committee discussion is limited to Forest Service staff and Committee members. However, public input opportunity will be provided and individuals will have the opportunity to address the Committee at that time.

Dated: June 3, 2009.

Forrest Cole,

Forest Supervisor.

[FR Doc. E9–14311 Filed 6–19–09; 8:45 am]

BILLING CODE 3410–11–M

DEPARTMENT OF AGRICULTURE

Forest Service

AGENCY: Notice of Resource Advisory Committee, Custer, South Dakota, USDA Forest Service.

ACTION: Notice of meeting.

SUMMARY: Pursuant to authorities in the Federal Advisory Committee Act (Law 92–463) and Public Law 110–343, enacted on October 3, 2008, reauthorizing and amending the Secure Rural Schools and Community Self Determination Act of 2000 (Pub. L. 106–393), the Black Hills National Forest Custer County Resource Advisory Committee will meet on Wednesday, June 24, 2009 in Custer, South Dakota. The meeting is open to the public.

SUPPLEMENTARY INFORMATION: The meeting on June 24, 2009 will begin at 5:30 p.m. at the Black Hills National Forest Supervisor's Office at 25041 North Highway 16, Custer, South Dakota. Agenda topics will be Project status update and general business.

FOR FURTHER INFORMATION CONTACT: Lynn Kolund, Hell Canyon District Ranger and Designated Federal Official, at 605–673–4853.

Lynn Kolund,

District Ranger.

[FR Doc. E9–14619 Filed 6–19–09; 8:45 am]

BILLING CODE M

DEPARTMENT OF AGRICULTURE

Forest Service

Plan Revision for the Kooentai National Forest, Montana and the Idaho Panhandle National Forests, Idaho

AGENCY: Forest Service, USDA.

ACTION: Notice of adjustment for resuming the land management plan revision process.

SUMMARY: The USDA, Forest Service is resuming preparation of the Kootenai and Idaho Panhandle National Forests revised land management plans as directed by the National Forest Management Act (NFMA). The Kootenai and Idaho Panhandle National Forests comprise the Kootenai and Idaho Panhandle Planning Zone (KIPZ). Preparation of the revised plan was halted when the 2005 Forest Service planning rule was enjoined. A new planning rule (36 CFR part 219) took effect on April 21, 2008, allowing the planning process to be resumed. This notice marks the resumption of the Kootenai and Idaho Panhandle National Forests plan revision process under the new planning rule.

ADDRESSES: Information on this revision is available at Kootenai and Idaho Panhandle National Forests revision Web site *http://www.fs.fed.us/kipz.*

FOR FURTHER INFORMATION CONTACT: Linda Clark, Interdisciplinary Team Leader, Kootenai and Idaho Panhandle Planning Zone (KIPZ), 83815 Schreiber Way, Coeur d'Alene, Idaho 83815, (208) 765–7417 or *laclark@fs.fed.us.* Individuals who use telecommunication devices for the deaf (TDD) may call the Federal Information Relay Service (FIRS) at 1–800–877–8339 between 8 a.m. and 8 p.m., Eastern Time, Monday through Friday.

SUPPLEMENTARY INFORMATION: Notification of adjustment of plan revision process for the Kootenai and Idaho Panhandle National Forests planning zone (KIPZ) land management plan was provided in the **Federal Register**, 70 FR 28901, May 19, 2005. The plan revision was initiated under the planning procedures contained in the 2005 Forest Service planning rule (36 CFR part 219 (2005)). On March 30, 2007, the Federal district court for the Northern District of California enjoined the Department from implementing and using the 2005 planning rule until the Agency complied with the court's order regarding the National Environmental Policy Act, the Endangered Species Act, and the Administrative Procedure Act (*Citizens for Better Forestry* v. *USDA,*

481 F. Supp 2d 1059 (N.D. Cal. 2007)). Revision of the Kootenai and Idaho Panhandle National Forests land management plans under the (36 CFR part 219 (2005)) rule was suspended in response to the injunction. On April 21, 2008, following a notice and comment opportunity, completion of an environmental impact statement and consultation under the Endangered Species Act, the Department of Agriculture promulgated a new planning rule (36 CFR part 219 (2008)). This new planning rule explicitly allows the resumption of plan revisions started under the 2005 rule based on a finding that the revision process conforms to the new planning rule (36 CFR 219.14(b)(3)(ii)).

In May 2006, the Kootenai and Idaho Panhandle National Forests prepared and released a Proposed Land Management Plan with maps for a 90-day comment period (extended to 120 days). Supporting documentation such as a draft Comprehensive Evaluation Report and Analysis of Management Situation were also made available to the public. The development and content of those documents and plan components are consistent with the 2008 planning rule. Beginning in May 2005, and prior to injunction of the 2005 planning rule, the Kootenai and Idaho Panhandle National Forests implemented four major phases of public involvement: (1) Scoping; (2) collaborative workgroup meetings to develop desired conditions and other components of the Plan; (3) collaborative workgroup meetings to discuss Starting Option maps; and (4) the release of the Proposed Plan maps. Since release of the Proposed Land Management Plan and the conclusion of the public comment period, the Analysis of Public Comment report was produced in March 2007, and posted on the KIPZ Web site. This report is a synthesis and summary of the comments and concerns that were brought up during the comment period on the Proposed Land Management Plans. Results from collaboration will be used as the revision process resumes. The remainder of the revision process will be conducted in accordance with all Forest Service directives applicable to the 2008 planning rule.

Based on the discussions above, we find that the planning actions taken prior to April 21, 2008, the effective date of the new planning rule, conform to the planning process of the 2008 planning rule and for that reason the plan revision process does not need to be restarted. Therefore, the Kootenai and Idaho Panhandle National Forests are resuming their plan revision process where we left off in March 2007, by using information received during the public comment period and collaborative efforts on the Proposed Land Management Plan to develop our final plans.

Dated: June 11, 2009.

Paul Bradford,

Forest Supervisor.

[FR Doc. E9–14417 Filed 6–19–09; 8:45 am]

BILLING CODE 3410–11–P

DEPARTMENT OF AGRICULTURE

Forest Service

Coronado National Forest; Arizona; Revised Land and Resource Management Plan

AGENCY: Forest Service, USDA.

ACTION: Notice of initiation to revise the Coronado National Forest's Land and Resource Management Plan.

SUMMARY: The Forest Service is revising the Coronado National Forest's Land and Resource Management Plan (hereafter referred to as the Forest Plan). This notice describes the documents available for review and how to obtain them; summarizes the need to change the Forest Plan; provides information concerning public participation and collaboration, including the process for submitting comments; provides an estimated schedule for the planning process, including the time available for comments; and includes names and addresses for agency officials who can provide additional information.

DATES: Revision formally begins with the publication of this notice in the **Federal Register**. To be most beneficial to the planning process, your comments on the need for change should be submitted by August 31, 2009.

ADDRESSES: Send written comments to: Coronado National Forest, Attention: Forest Plan Revision Team, 300 W Congress, Tucson, Arizona 85701. E-mail: *coronado-plan@fs.fed.us.*

FOR FURTHER INFORMATION CONTACT: Jennifer Ruyle at (520) 388–8300 or e-mail the plan revision team at: *coronado-plan@fs.fed.us.*

SUPPLEMENTARY INFORMATION:

Documents Available for Review

The Comprehensive Evaluation Report, the Ecological Sustainability Report, and the Social and Economic Sustainability Report are the Forest Plan revision analysis documents that provide evaluations of social, economic, and ecological conditions and trends in and around the Coronado National Forest. The information outlined in the Comprehensive Evaluation Report identifies the need to change or revise the 1986 Forest Plan. These documents are available for review and are located on the Forest's Web site at *http://www.fs.fed.us/r3/coronado/plan-revision/plan-revision-documents.shtml* or by request.

Need for Change

The need for change has been organized into five revision topics: 1. Ecosystem Restoration, 2. Safety and Information, 3. Public Access and Travel Patterns, 4. Preservation of Open Space, and 5. Collaboration and Partnerships. For each of the revision topics, there is a need for the revised Forest Plan to make changes in plan components and management approaches, as described below:

1. Ecosystem Restoration

Needed changes in plan components:

- Desired condition statements and objectives need to be developed that provide adequate guidance for sustaining and restoring ecosystems.
- Plan components should be changed to reflect new scientific knowledge and updated language.
- The Forest Plan components for ecological attributes should be integrative, where possible, to reflect the interconnectedness between physical and biological resources.
- The Forest Plan needs to be changed to include objectives and guidelines that reflect systematic observation and analysis of treatment results, and adaptation of treatment methods based on those results.
- As Forest Plan components are developed, they will need to reflect the uncertainties associated with changing climate.
- Plan components for reducing the threat of invasive species and for conserving native species will need to be developed.
- Plan components will need to be developed for sustaining aquatic habitats that are at risk.
- Place-based geographic area plan components should be developed where it makes sense to do so. This will help to facilitate understanding of the management needs for each mountain range.

2. Safety and Information

Needed changes in plan components:

- The Forest Plan needs to be changed to identify new strategies for sustaining the forest resources and experiences in the face of changes in population, behavior, and increased development.
- Place-based geographic area plan components should be developed where it makes sense to do so.

3. Public Access and Travel Patterns

Needed changes in plan components:

• The Forest Plan needs to be changed to include desired conditions and objectives that emphasize and prioritize Forest-wide public and administrative access needs.

Needed changes in management approaches:

Management approaches should be identified that facilitate comprehensive, coordinated and flexible collaborative solutions for resolving public access needs.

4. Preservation of Open Space

Needed changes in plan components:

• Desired condition statements should be developed that reflect the role of the Coronado National Forest in preserving open space.

• Guidelines, based on the Scenery Management System, should be developed to protect scenic natural landscapes.

Needed changes in management approaches:

• Management approaches for the Coronado National Forest will need to be developed for participating in county and community land use planning efforts.

5. Collaboration and Partnerships

Needed changes in plan components:

• The Forest Plan should include desired conditions that reflect, where possible, outcomes that are based on collaborative processes.

Needed changes in management approaches:

• Management approaches that emphasize collaboration should be described.

• The plan needs to be changed to reflect an integrated approach to management of traditional uses and cultural resources.

(Reference: Comprehensive Evaluation Report.)

Public Participation and Opportunity To Comment

The revision process is designed to provide continued opportunities for public collaboration and open participation in the development of the revised Forest Plan. Additional information on the process, the documents being produced, and public participation opportunities can be found on the Coronado National Forest's plan revision Web site at: *http://www.fs.fed.us/r3/coronado/plan-revision/index.shtml.* The Forest Service is seeking public comments on the need for change identified in the comprehensive Evaluation Report. Substantive comments received by August 31, 2009 will be of the most value in evaluating public response to the adequacy of the need for change topics outlined in the report.

It is important to participate in the plan revision process as only those parties who participate following the publication of this notice through the submission of written comments can submit an objection later in the proposed plan development process pursuant to 36 CFR 219.13(a).

Comments received during the planning process, including the names and addresses of those who commented will be part of the public record available for public inspection. The Responsible Official shall accept and consider comments submitted anonymously. Submit written comments to the address noted above.

Estimated Planning Process Schedule

The revision process for the Coronado National Forest officially begins with the publication of this notice in the **Federal Register**. A draft proposed Forest Plan is currently scheduled to be issued for pre-decisional review in May 2010 and final plan approval in December 2010.

Responsible Official

The Forest Supervisor, Coronado National Forest, is the Responsible Official (36 CFR 219.2(b)(1)). (Authority: 36 CFR 219.9(b)(2)(i), 73 FR 21509, April 21, 2008).

Dated: June 11, 2009.

Jeanine Derby,

Forest Supervisor, Coronado National Forest.

[FR Doc. E9–14537 Filed 6–19–09; 8:45 am]

BILLING CODE 3410–11–M

DEPARTMENT OF AGRICULTURE

Forest Service

Southern Recreation Resource Advisory Committee

AGENCY: Forest Service, USDA.

ACTION: Notice of request for nominations for the Southern Region Recreation Resource Advisory Committee.

SUMMARY: Nominations are being sought for certain positions to serve on the Recreation Resource Advisory Committee (Recreation RAC) operating in the Southern Region of the Forest Service. New members will be appointed by the Secretary of Agriculture (Secretary) and serve three-year terms. Appointments will begin in February 2010 when current member appointments expire.

One member is being sought to represent each of the following interests: (1) Wildlife Viewing/Visiting Interpretive Sites; (2) Non-motorized Recreation; (3) Local Environmental Groups; and (4) State Tourism Official Representing the State.

The public is invited to submit nominations for membership on the Recreation RAC. Current members who have only served one term may also apply. Application packets for Recreation RACs can be obtained on the Web at *http://www.fs.fed.us/passespermits/rrac-application.shtml* or by e-mailing: *r8_rrac@fs.fed.us.* Interested parties may also contact Caroline Mitchell, U.S. Forest Service, PO Box 1270, Hot Springs, AR 71902 (501–321–5318).

All nominations must consist of a completed application packet that includes background information and other information that addresses a nomine's qualifications.

DATES: All applications must be received by the appropriate office listed below on or before July 31, 2009. This timeframe may be extended if officials do not receive applications for needed positions.

ADDRESSES: Interested persons may submit nominations to the Southern Region Recreation RAC by U.S. Mail: C. Mitchell, Ouachita National Forest, PO Box 1270, Hot Springs, AR 71902, or Express Delivery: C. Mitchell, Ouachita National Forest, 100 Reserve Street, Hot Springs, AR 71901.

FOR FURTHER INFORMATION CONTACT: Anyone wanting further information regarding this request for nominations may contact the designated federal official: Cheryl Chatham, Recreation RAC DFO, PO Box 1270, Hot Springs, AR 71902 (501–321–5277).

SUPPLEMENTARY INFORMATION:

Background

The Federal Lands Recreation Enhancement Act (REA), signed December 2004, requires that the Forest Service and the Bureau of Land Management (BLM) provide Recreation RACs with an opportunity to make recommendations to the two agencies on certain types of proposed recreation fee changes.

REA allows the agencies to use existing advisory councils, such as BLM Resource Advisory Councils (RACs), or to establish new committees as appropriate. The Forest Service and BLM elected to jointly use existing BLM RACs in the states of Arizona, Idaho, the Dakotas, Montana, Nevada, New Mexico, and Utah. In 2006, the Forest Service chartered new Recreation RACs for the states of California and Colorado, and for the Forest Service Pacific

Northwest, Eastern and Southern Regions. The Forest Service is using an existing advisory board for the Black Hills National Forest in South Dakota. In addition, the Governors of three states—Alaska, Nebraska and Wyoming—requested that their State be exempt from the REA–R/RAC requirement, and the two Departments concurred with the exemptions.

Members were appointed to the Southern Recreation RAC in February 2007 for either two-year or three-year terms. The terms for the three-year members will expire February 2010.

The Recreation RACs provide recreation fee recommendations to both the Forest Service and the Bureau of Land Management (BLM). These committees make recreation fee program recommendations on implementing or eliminating standard amenity fees; expanded amenity fees; and noncommercial, individual special recreation permit fees; expanding or limiting the recreation fee program; and fee-level changes.

Recreation RAC Composition

Each Recreation RAC consists of 11 members appointed by the Secretary. REA provided flexibility to modify the specified membership of the RAC ''as appropriate'' to ensure a fair and balanced representation of recreation interests. Due to climate conditions in the Southern Region, the Region does not have a winter sports program. Therefore, the categories of winter motorized recreation and winter non-motorized recreation were replaced with (1) camping and (2) wildlife viewing/visiting interpretive sites. In addition, as the region has very few motorized outfitters and guides, they have two positions representing non-motorized outfitters and guides. The positions are as follows:

(1) Five persons who represent recreation users and that include, as appropriate, the following:

a. Camping interests;

b. Day-use interests, such as wildlife viewing and interpretive centers;

c. Summer motorized recreation, such as motorcycles, boats, and off-highway vehicles;

d. Summer non-motorized recreation, such as backpacking, horseback riding, mountain biking, canoeing, and rafting; and

e. Hunting and fishing;

(2) Three persons who represent interest groups that include, as appropriate, the following:

a. Non-motorized outfitters and guides—position one;

b. Non-motorized outfitters and guides—position two; and

c. Local environmental groups.

(3) Three persons, as follows:

a. State tourism official to represent the state;

b. A person who represents affected Indian tribes; and

c. A person who represents affected local government interests.

Nomination Information

Any individual or organization may nominate one or more qualified persons to represent the interests listed above to serve on the Recreation RAC. To be considered for membership, nominees must:

- Identify what interest group they would represent and how they are qualified to represent that group;
- State why they want to serve on the committee and what they can contribute;
- Show their past experience in working successfully as part of a collaborative group; and
- Complete Form AD–755, Advisory Committee or Research and Promotion Background Information.

Letters of recommendation are welcome, but not required. Individuals may also nominate themselves. Nominees do not need to live in a state within a particular Recreation RAC's area of jurisdiction nor live in a state in which Forest Service-managed lands are located.

Application packets, including evaluation criteria and the AD–755 form, are available at *http://www.fs.fed.us/passespermits/rrac-application.shtml* or by contacting the Southern Region as identified in this notice. Nominees must submit all documents to the appropriate regional contact. Additional information about recreation fees and REA is available at *http://www.fs.fed.us/passespermits/about-rec-fees.shtml.*

The Forest Service will also work with Governors and county officials to identify potential nominees. The Forest Service will review the applications and prepare a list of qualified applicants from which the Secretary shall appoint both members and alternates. An alternate will become a participating member of the Recreation RACs only if the member for whom the alternate is appointed to replace leaves the committee permanently.

Recreation RAC members serve without pay but are reimbursed for travel and per diem expenses for regularly scheduled committee meetings. All Recreation RAC meetings are open to the public and an open public forum is part of each meeting. Meeting dates and times will be determined by agency officials in consultation with the Recreation RAC members.

Dated: June 12, 2009.

Cheryl Chatham,

Designated Federal Official.

[FR Doc. E9–14434 Filed 6–19–09; 8:45 am]

BILLING CODE 3410–11–M

DEPARTMENT OF AGRICULTURE

Grain Inspection, Packers and Stockyards Administration

United States Standards for Whole Dry Peas and Split Peas

AGENCY: Grain Inspection, Packers and Stockyards Administration, USDA.

ACTION: Final notice.

SUMMARY: The Department of Agriculture's (USDA) Grain Inspection, Packers and Stockyards Administration (GIPSA) is revising the US Standards for Whole Dry Peas and Split Peas to amend the general definitions, ''Whole Dry Peas'' and ''Split Peas,'' and the following specific definitions: ''Smooth Green Dry Peas,'' ''Smooth Yellow Dry Peas,'' ''Wrinkled Dry Peas,'' ''Green Split Peas'' and ''Yellow Split Peas.'' In addition, GIPSA is modifying the classification term and associated definitions, ''Winter Dry Peas'' and ''Winter Split Peas.'' These changes will help facilitate the marketing of new winter pea variety releases and help ensure the purity of class for ''Whole Dry Peas'' and ''Split Peas.''

DATES: *Effective Date:* July 15, 2009.

FOR FURTHER INFORMATION CONTACT: Beverly A. Whalen at USDA, GIPSA, FGIS, Market and Program Analysis Staff, Beacon Facility, STOP 1404, P.O. Box 419205, Kansas City, Missouri, 64141; Telephone (816) 823–4648; Fax Number (816) 823–4644; e-mail *Beverly.A.Whalen@usda.gov.*

SUPPLEMENTARY INFORMATION:

Background

Section 203(c) of the Agricultural Marketing Act of 1946, as amended, (AMA) (7 U.S.C. 1622(c)), directs and authorizes the Secretary of Agriculture ''to develop and improve standards of quality, condition, quantity, grade, and packaging, and recommend and demonstrate such standards in order to encourage uniformity and consistency in commercial practices.'' GIPSA is committed to carrying out this authority in a manner that facilitates the marketing of agricultural commodities.

GIPSA establishes and maintains a variety of quality and grade standards for agricultural commodities that serve

as the fundamental starting point to define commodity quality in the domestic and global marketplace. GIPSA provides official procedures for how inspectors determine the various grading factors in supporting handbooks, such as the Pea and Lentil Handbook, which is available on the GIPSA Web site at *http://www.gipsa.usda.gov/GIPSA/webapp?area=home&subject=lr&topic=hb-pl.*

The AMA standards and supporting procedures are voluntary and used widely in private contracts, government procurement and marketing communication. Standards developed under the AMA include those for rice, whole dry peas, split peas, feed peas, lentils and beans. The U.S. standards for whole dry peas, split peas, feed peas, lentils and beans no longer appear in the Code of Federal Regulations, but are now maintained by USDA–GIPSA. The process for developing or reviewing these standards is specified in the AMA regulations (7 CFR 868.102, Procedures for establishing and revising grade standards). The U.S. Standards for Whole Dry Peas and Split Peas are available from the GIPSA Web site at *http://www.gipsa.usda.gov*, or by phone, fax or e-mail from the contact listed above.

GIPSA representatives maintain an ongoing working relationship with the USA Dry Pea and Lentil Council (USADPLC), a national organization of producers, processors, and exporters of U.S. dry peas, lentils, and chickpeas; the US Dry Pea and Lentil Trade Association (USPLTA), a national association representing processors, traders, and transporters in the pea and lentil industry, as well as handlers and merchandisers to ensure the effectiveness of the U.S. Standards for whole dry peas, split peas, and lentils in today's marketing environment. USADPLC and USPLTA maintain that the release of and the market's acceptance of new winter pea varieties necessitate several changes in the grading standards for winter dry peas and split peas. As a result, GIPSA is revising the whole dry and split pea standards to enable new and future winter pea variety releases to be classified and marketed on the basis of cotyledon color and desired usage, not on the basis of growth habit. GIPSA is also modifying classification terms and broadening associated working definitions that permit physically and visually similar peas to be included in a common class to help ensure purity.

Comment Review

GIPSA published a notice in the **Federal Register** on April 20, 2009 (74 FR 17948), inviting interested parties to comment on the proposed revisions to the U.S. Standards for Whole Dry Peas and Split Peas. GIPSA received one comment that supported the proposed changes from a company that markets both spring and winter planted types of dry peas.

Final Action

GIPSA is revising select descriptive classification terms and definitions to allow new and future winter dry pea releases to be marketed as smooth green or smooth yellow dry peas and preserve purity of class by grouping colored or distinctively mottled peas (*e.g.,* traditional winter dry and maple peas), regardless of planting date. The definitions are revised as follows:

1. ''Whole Dry Peas.'' Threshed seeds of the garden type pea plant (*Pisum sativum L.* and *Pisum sativum var. arvense (L.) Poir.*), which after the removal of dockage, contain 50.0 percent or more of whole peas and not more than 10.0 percent of foreign material.

2. ''Smooth Yellow Dry Peas.'' Dry peas which have smooth seed coats and yellow cotyledons and contain not more than 1.5 percent of other classes.

3. ''Smooth Green Dry Peas.'' Dry peas which have smooth seed coats and green cotyledons and contain not more than 1.5 percent of other classes.

4. ''Wrinkled Dry Peas.'' Dry peas which have wrinkled seed coats and contain not more than 1.5 percent of other classes.

5. ''Split Peas.'' Threshed seeds of the garden type pea plant (*Pisum sativum L.* and *Pisum sativum var. arvense (L.) Poir.*), which have 50.0 percent or more of the peas split into halves or smaller pieces and contain not more than 10.0 percent of foreign material.

6. ''Green Split Peas.'' Split peas from smooth green dry pea varieties.

7. ''Yellow Split Peas.'' Split peas from smooth yellow dry pea varieties.

In addition, GIPSA is replacing the classification terms and definitions of ''Winter Dry Peas'' and ''Winter Split Peas'' with ''Mottled Dry Peas'' and ''Miscellaneous Split Peas,'' respectively. The changes are as follows:

1. ''Mottled Dry Peas.'' Dry peas of the Austrian winter pea type and other peas which have colored or distinctively mottled seed coats which contain not more than 1.5 percent of other classes.

2. ''Miscellaneous Split Peas.'' Split peas from classes of whole peas other than smooth green or smooth yellow dry pea varieties.

These changes will facilitate use of the standards and better reflect current marketing practices.

The changes to the standards are effective July 15, 2009, the beginning of the harvest season.

Authority: 7 U.S.C. 1621–1627.

J. Dudley Butler,

Administrator, Grain Inspection, Packers and Stockyards Administration.

[FR Doc. E9–14565 Filed 6–19–09; 8:45 am]

BILLING CODE 3410–KD–P

COMMITTEE FOR THE IMPLEMENTATION OF TEXTILE AGREEMENTS

Cancellation of Electronic Visa Information System (ELVIS) and Quota Reporting Requirements for Textiles and Textile Products Produced or Manufactured in the People's Republic of China and Exported prior to January 1, 2009

June 16, 2009.

AGENCY: Committee for the Implementation of Textile Agreements (CITA).

ACTION: Issuing a directive to the Commissioner, U.S. Customs and Border Protection canceling all previous directives concerning ELVIS and quota reporting requirements for China.

EFFECTIVE DATE: July 1, 2009.

FOR FURTHER INFORMATION CONTACT: Maria D'Andrea, Office of Textiles and Apparel, U.S. Department of Commerce, (202) 482-4058.

SUPPLEMENTARY INFORMATION:

Authority: Executive Order 11651 of March 3, 1972, as amended; Section 204 of the Agricultural Act of 1956, as amended (7 U.S.C. 1854).

Effective on July 1, 2009, the United States is terminating the ELVIS transmission requirement and quota reporting requirements for goods exported from China prior to January 1, 2009. In a notice and letter published in the Federal Register on December 10, 2008 (see 73 FR 75085), the United States canceled all previous directives concerning requirements for ELVIS transmissions effective for goods exported from China prior to January 1, 2009. This action is consistent with the terms of the bilateral agreement on textiles and apparel between the Governments of the United States of America and the People's Republic of China that was signed on November 8, 2005 (see 70 FR 74777).

In the letter below, CITA instructs U.S. Customs and Border Protection to

cancel all requirements for ELVIS transmission and quota reporting for goods exported from China prior to January 1, 2009.

Maria D'Andrea,

Acting Chairman, Committee for the Implementation of Textile Agreements.

Committee for the Implementation of Textile Agreements

June 16, 2009.

Commissioner,
U.S. Customs and Border Protection, Washington, DC 20229.

Dear Commissioner: Effective on July 1, 2009, you are directed to cancel all requirements for ELVIS transmissions and quota reporting for goods exported from China prior to January 1, 2009.

The Committee for the Implementation of Textile Agreements has determined that this action falls within the foreign affairs exception to the rulemaking provisions of 5 U.S.C. 553(a)(1).

Sincerely,
Maria D'Andrea,
Acting Chairman, Committee for the Implementation of Textile Agreements.

[FR Doc. E9–14623 Filed 6–19–09; 8:45 am]

BILLING CODE 3510–DS

COMMITTEE FOR THE IMPLEMENTATION OF TEXTILE AGREEMENTS

Termination of Textile Visa Requirement for Women's and Girls' Wool Coats Manufactured in the Russian Federation Effective July 1, 2009

June 16, 2009.

AGENCY: Committee for the Implementation of Textile Agreements (CITA).

ACTION: Issuing a directive to the Commissioner, U.S. Customs and Border Protection, terminating the textile visa arrangement with Russia for Category 435, women's and girls' wool coats.

EFFECTIVE DATE: July 1, 2009.

FOR FURTHER INFORMATION CONTACT: Maria D'Andrea, Office of Textiles and Apparel, U.S. Department of Commerce, (202) 482-4058.

SUPPLEMENTARY INFORMATION:

Authority: Executive Order 11651 of March 3, 1972, as amended; Section 204 of the Agricultural Act of 1956, as amended (7 U.S.C. 1854).

In a notice and letter published in the **Federal Register** on January 31, 1997 (see 62 FR 4729), the United States established visa requirements for women's and girls' wool coats in Category 435 manufactured in the Russian Federation and exported from Russia on and after March 1, 1997. Because textile and apparel imports into the United States of America from the Russian Federation are no longer subject to quota restrictions, there is no need to maintain the visa requirements. Accordingly, pursuant to the Visa Arrangement between the Governments of the United States of America and the Russian Federation that was signed on October 22, 1996 and December 31, 1996, CITA has notified the Russian Federation that it is terminating visa requirements for women's and girls' wool coats in Category 435.

In the letter below, CITA is directing U.S. Customs and Border Protection to terminate the visa requirement for women's and girls' wool coats in Category 435 exported from Russia effective July 1, 2009.

Maria D'Andrea,

Acting Chairman, Committee for the Implementation of Textile Agreements.

Committee for the Implementation of Textile Agreements

June 16, 2009.

Commissioner,
U.S. Customs and Border Protection, Washington, DC 20229.

Dear Commissioner: You are directed to terminate all visa requirements for women's and girls' wool coats in Category 435 exported from Russia effective July 1, 2009.

The Committee for the Implementation of Textile Agreements has determined that this action falls within the foreign affairs exception to the rulemaking provisions of 5 U.S.C. 553(a)(1).

Sincerely,
Maria D'Andrea,
Acting Chairman, Committee for the Implementation of Textile Agreements.

[FR Doc. E9–14631 Filed 6–19–09; 8:45 am]

BILLING CODE 3510–DS

DEPARTMENT OF COMMERCE

Submission for OMB Review; Comment Request

The Department of Commerce will submit to the Office of Management and Budget (OMB) for clearance the following proposal for collection of information under the provisions of the Paperwork Reduction Act (44 U.S.C. Chapter 35).

Agency: National Oceanic and Atmospheric Administration (NOAA).

Title: Capital Construction Fund—Deposit/Withdrawal Report.

OMB Control Number: 0648–0041.

Form Number(s): NOAA Form 34–82.

Type of Request: Regular submission.

Number of Respondents: 1,200.

Average Hours per Response: 20 minutes.

Burden Hours: 3,600.

Needs and Uses: Respondents are fishermen holding Fishing Vessel Capital Construction Fund (FVCCF) agreements. The FVCCF is a tax-deferral program for fishing vessel construction, acquisition, or reconstruction. Information collected on the NOAA Form 34–82 is used in checking for respondents' compliance with program requirements and for inconsistencies in their reporting of program-related adjustments to their income. The deposit and withdrawal information is also required, by the Merchant Marine Act of 1936, to be annually reported to the Secretary of Treasury.

Affected Public: Business or other for-profit organizations.

Frequency: Annually.

Respondent's Obligation: Mandatory.

OMB Desk Officer: David Rostker, (202) 395–3897.

Copies of the above information collection proposal can be obtained by calling or writing Diana Hynek, Departmental Paperwork Clearance Officer, (202) 482–0266, Department of Commerce, Room 7845, 14th and Constitution Avenue, NW., Washington, DC 20230 (or via the Internet at *dHynek@doc.gov*).

Written comments and recommendations for the proposed information collection should be sent within 30 days of publication of this notice to David Rostker, OMB Desk Officer, FAX number (202) 395–7285, or *David_Rostker@omb.eop.gov.*

Dated: June 16, 2009.

Gwellnar Banks,

Management Analyst, Office of the Chief Information Officer.

[FR Doc. E9–14539 Filed 6–19–09; 8:45 am]

BILLING CODE 3510–22–P

DEPARTMENT OF COMMERCE

Submission for OMB Review; Comment Request

The Department of Commerce will submit to the Office of Management and Budget (OMB) for clearance the following proposal for collection of information under the provisions of the Paperwork Reduction Act (44 U.S.C. Chapter 35).

Agency: National Oceanic and Atmospheric Administration (NOAA).

Title: Application for Appointment in the NOAA Commissioned Officer Corps.

OMB Control Number: 0648–0047.

Form Number(s): NOAA Forms 56–42; 56–42D.

Type of Request: Regular submission.

Number of Respondents: 1,800.

Average Hours per Response: Application, 2 hours; reference, 15

minutes; and applicant interview, 5 hours.

Burden Hours: 2,475.

Needs and Uses: The NOAA Commissioned Officer Corps is the uniformed service of the National Oceanic and Atmospheric Administration, a bureau of the United States Department of Commerce. The NOAA Corps provides a cadre of professionals trained in engineering, earth sciences, oceanography, meteorology, fisheries science, and other related disciplines who serve their country by supporting NOAA's mission of surveying the Earth's oceans, coasts, and atmosphere to ensure the economic and physical well-being of the Nation. NOAA Corps officers operate vessels and aircraft engaged in scientific missions and serve in leadership positions throughout NOAA. Persons wishing to apply for an appointment in the NOAA Commissioned Officer Corps must complete an application package.

Affected Public: Individuals or households.

Frequency: On occasion.

Respondent's Obligation: Voluntary.

OMB Desk Officer: David Rostker, (202) 395–3897.

Copies of the above information collection proposal can be obtained by calling or writing Diana Hynek, Departmental Paperwork Clearance Officer, (202) 482–0266, Department of Commerce, Room 7845, 14th and Constitution Avenue, NW., Washington, DC 20230 (or via the Internet at *dHynek@doc.gov*).

Written comments and recommendations for the proposed information collection should be sent within 30 days of publication of this notice to David Rostker, OMB Desk Officer, FAX number (202) 395–7285, or *David_Rostker@omb.eop.gov.*

Dated: June 16, 2009.

Gwellnar Banks,

Management Analyst, Office of the Chief Information Officer.

[FR Doc. E9–14540 Filed 6–19–09; 8:45 am]

BILLING CODE 3510–12–P

DEPARTMENT OF COMMERCE

Foreign-Trade Zones Board

[Order No. 1624]

Approval for Expanded Manufacturing Authority, Foreign-Trade Subzone 82D, Sony Electronics Inc. (Digital Print Media Products), Dothan, Alabama

Pursuant to its authority under the Foreign-Trade Zones Act of June 18, 1934, as amended (19 U.S.C. 81a–81u), the Foreign-Trade Zones Board (the Board) adopts the following Order:

Whereas, Sony Electronics Inc., operator of Subone 82D, has requested an expansion of the scope of manufacturing authority approved within Subzone 82D in Dothan, Alabama, (FTZ Docket 68–2008, filed December 11, 2008);

Whereas, notice inviting public comment has been given in the **Federal Register** (73 FR 78290, 12/22/2008) and the application has been processed pursuant to the FTZ Act and the Board's regulations; and,

Whereas, the Board adopts the findings and recommendations of the examiner's report, and finds that the requirements of the FTZ Act and Board's regulations are satisfied, and that the proposal is in the public interest;

Now, therefore, the Board hereby orders:

The application to expand the scope of manufacturing authority under zone procedures within Subzone 82D, as described in the application and **Federal Register** notice, is approved, subject to the FTZ Act and the Board's regulations, including Section 400.28.

Signed at Washington, DC, this 12th day of June 2009.

Ronald K. Lorentzen,

Acting Assistant Secretary of Commerce for Import Administration, Alternate Chairman, Foreign-Trade Zones Board.

Attest:

Andrew McGilvray,

Executive Secretary.

[FR Doc. E9–14630 Filed 6–19–09; 8:45 am]

BILLING CODE 3510–DS–S

DEPARTMENT OF COMMERCE

National Oceanic and Atmospheric Administration

RIN 0648–XO22

Endangered Species; File No. 1506

AGENCY: National Marine Fisheries Service (NMFS), National Oceanic and Atmospheric Administration (NOAA), Commerce.

ACTION: Notice; issuance of permit modification.

SUMMARY: Notice is hereby given that Blair E. Witherington, Ph.D., Florida Fish and Wildlife Conservation Commission, Fish and Wildlife Research Institute, Melbourne Beach Field Laboratory, 9700 South A1A, Melbourne Beach, FL 32951, has been issued a modification to scientific research Permit No. 1506–01.

ADDRESSES: The modification and related documents are available for review upon written request or by appointment in the following offices:

Permits, Conservation and Education Division, Office of Protected Resources, NMFS, 1315 East–West Highway, Room 13705, Silver Spring, MD 20910; phone (301)713–2289; fax (301)427–2521; and

Southeast Region, NMFS, 263 13th Ave South, St. Petersburg, FL 33701; phone (727)824–5312; fax (727)824–5309.

FOR FURTHER INFORMATION CONTACT: Amy Hapeman or Patrick Opay, (301)713–2289.

SUPPLEMENTARY INFORMATION: On November 26, 2008, notice was published in the **Federal Register** (73 FR 72027) that a modification of Permit No. 1506–01, issued June 1, 2006 (71 FR 31165), had been requested by the above–named individual. The requested modification has been granted under the authority of the Endangered Species Act of 1973, as amended (ESA; 16 U.S.C. 1531 *et seq.*) and the regulations governing the taking, importing, and exporting of endangered and threatened species (50 CFR parts 222–226).

Permit No. 1506–01 authorizes the permit holder to study neonate and juvenile loggerhead (*Caretta caretta*), green (*Chelonia mydas*), Kemp's ridley (*Lepidochelys kempii*), hawksbill (*Eretmochelys imbricata*) and leatherback (*Dermochelys coriacea*) sea turtles in the waters of the Gulf of Mexico and the Atlantic Ocean off the coast of Florida. The purpose of the research is to identify developmental habitat, evaluate the extent of ingestion of marine debris, and provide insight into juvenile sea turtle movements and dive patterns. Dr. Witherington may capture up to 250 loggerhead, 100 green, 50 hawksbill, 50 Kemp's ridley, and 10 leatherback sea turtles by handheld dip nets annually. All turtles are measured and released. A subset of green and loggerhead turtles may be transported to a lab and examined with high resolution magnetic resonance interferometry or computerized tomography, held for 3–4 days and released to determine their level of anthropogenic debris ingestion. Annually, four of each species of green, hawksbill, and Kemp's ridley sea turtles may have sonic transmitters and data loggers attached to measure movements and dive patterns, be recaptured after 24 hours to remove the transmitter and released.

The modification authorizes researchers to conduct the following activities annually on turtles authorized for capture: flipper and passive integrated transponder tag all animals,

biopsy sample up to 100 loggerhead, 100 green, and 50 hawksbill sea turtles, and lavage up to 50 loggerhead, 50 green, 50 hawksbill, 50 Kemp's ridley, and 10 leatherback sea turtles. Imaging activities and attachment of sonic transmitters and data loggers are no longer authorized for any species. No increase in the total number of turtles taken is authorized. These additional activities will provide information on the genetic origin, diet, and movement of sea turtles in this area. The amendment is valid until the permit expires on March 31, 2010.

Issuance of this modification, as required by the ESA was based on a finding that such permit (1) was applied for in good faith, (2) will not operate to the disadvantage of such endangered or threatened species, and (3) is consistent with the purposes and policies set forth in section 2 of the ESA.

Dated: June 16, 2009.

P. Michael Payne,

Chief, Permits, Conservation and Education Division, Office of Protected Resources, National Marine Fisheries Service.

[FR Doc. E9–14608 Filed 6–19–09; 8:45 am]

BILLING CODE 3510–22–S

DEPARTMENT OF COMMERCE

International Trade Administration

[A–552–801]

Certain Frozen Fish Fillets from the Socialist Republic of Vietnam: Final Results of the Third New Shipper Reviews

AGENCY: Import Administration, International Trade Administration, Department of Commerce.

SUMMARY: The Department of Commerce (''Department'') is conducting two new shipper reviews of the antidumping duty order on certain frozen fish fillets from the Socialist Republic of Vietnam (''Vietnam''). See Notice of Antidumping Duty Order: Certain Frozen Fish Fillets from the Socialist Republic of Vietnam, 68 FR 47909 (August 12, 2003) (''Order''). These new shipper reviews include Hiep Thanh Seafood Joint Stock Company (''Hiep Thanh'') and Asia Commerce Fisheries Joint Stock Company (''Acomfish'') (collectively, ''Respondents''). Based upon our analysis of the comments and information received, we made changes to the dumping margin calculations for the final results. See Memorandum to the File from Alan Ray, Case Analyst, through Alex Villanueva, Program Manager, Final Results Analysis for Hiep Thanh Seafood Joint Stock Company (''Hiep Thanh'') (June 15, 2009); and Memorandum to the File from Emeka Chukwudebe, Case Analyst, through Alex Villanueva, Program Manager, Final Results Analysis for Asia Commerce Fisheries Joint Stock Company (''Acomfish'') (June 15, 2009). The final dumping margins are listed below in the section entitled ''Final Results of the Reviews.''

EFFECTIVE DATE: June 22, 2009.

FOR FURTHER INFORMATION CONTACT: Alan Ray or Emeka Chukwudebe, AD/CVD Operations, Office 9, Import Administration, International Trade Administration, U.S. Department of Commerce, 14th Street and Constitution Avenue, NW, Washington, DC 20230; telephone: (202) 482–5403 and (202) 482–0219, respectively.

SUPPLEMENTARY INFORMATION:

Case History

On January 28, 2009, the Department published in the **Federal Register** the preliminary results of these new shipper reviews of the antidumping duty order on certain frozen fish fillets from Vietnam. *See Certain Frozen Fish Fillets From the Socialist Republic of Vietnam: Notice of Preliminary Results of the Third New Shipper Reviews* 74 FR 4920 (January 28, 2009) (''*Preliminary Results*''). Since the *Preliminary Results*, the following events have occurred.

On April 21, 2009, the Department published the extension of the time limit for completion of the final results of these new shipper reviews by 60 days. *See Certain Frozen Fish Fillets from the Socialist Republic of Vietnam: Extension of Time Limit for Final Results of the Third New Shipper Reviews*, 74 FR 18199, (April 21, 2009).

On March 11, 2009, the Department placed additional information on the record. Catfish Farmers of America and individual U.S. catfish processors (''Petitioners'') and Respondents submitted comments and rebuttal comments regarding this additional information on March 25, 2009 and April 6, 2009, respectively. On April 20, 2009, Petitioners and Respondents submitted case briefs, and on April 27, 2009, Petitioners and Respondents submitted rebuttal briefs. On June 2, 2009, the Department allowed Respondents to comment on a revised fish size calculation placed on the record by Petitioners. On June 4, 2009, Respondents submitted comments. On June 10, 2009, Petitioners requested that the Respondents' June 4, 2009, comments be removed from the record.

Scope of the Order

The product covered by the order is frozen fish fillets, including regular, shank, and strip fillets and portions thereof, whether or not breaded or marinated, of the species P*angasius Bocourti, Pangasius Hypophthalmus* (also known as *Pangasius Pangasius*), and *Pangasius Micronemus*. Frozen fish fillets are lengthwise cuts of whole fish. The fillet products covered by the scope include boneless fillets with the belly flap intact (''regular'' fillets), boneless fillets with the belly flap removed (''shank'' fillets), boneless shank fillets cut into strips (''fillet strips/finger''), which include fillets cut into strips, chunks, blocks, skewers, or any other shape. Specifically excluded from the scope are frozen whole fish (whether or not dressed), frozen steaks, and frozen belly–flap nuggets. Frozen whole dressed fish are deheaded, skinned, and eviscerated. Steaks are bone-in, cross-section cuts of dressed fish. Nuggets are the belly–flaps.

The subject merchandise will be hereinafter referred to as frozen ''basa'' and ''tra'' fillets, which are the Vietnamese common names for these species of fish. These products are classifiable under tariff article codes 1604.19.4000, 1604.19.5000, 0305.59.4000, 0304.29.6033 (Frozen Fish Fillets of the species Pangasius including basa and tra) of the Harmonized Tariff Schedule of the United States (''HTSUS'').[1] The order covers all frozen fish fillets meeting the above specification, regardless of tariff classification. Although the HTSUS subheading is provided for convenience and customs purposes, our written description of the scope of the order is dispositive.

Analysis of Comments Received

All issues raised in the case and rebuttal briefs by parties to this proceeding and to which we have responded are listed in the Appendix to this notice and addressed in the Issues and Decision Memorandum (''Final Decision Memo''), which is hereby adopted by this notice. Parties can find a complete discussion of the issues raised in these new shipper reviews and the corresponding recommendations in this public memorandum which is on file in the Central Records Unit

[1] Until July, 2004, these products were classifiable under tariff article codes 0304.20.60.30 (Frozen Catfish Fillets), 0304.20.60.96 (Frozen Fish Fillets, NESOI), 0304.20.60.43 (Frozen Freshwater Fish Fillets) and 0304.20.60.57 (Frozen Sole Fillets) of the HTSUS. Until February 1, 2007, these products were classifiable under tariff article code 0304.20.60.33 (Frozen Fish Fillets of the species Pangasius including basa and tra) of the HTSUS.

(''CRU''), room 1117 of the main Department of Commerce building. In addition, a copy of the Final Decision Memo can be accessed directly on our website at http://ia.ita.doc.gov/. The paper copy and electronic version of the Final Decision Memo are identical in content.

Changes Since the Preliminary Results

Based on a review of the record as well as comments received from parties regarding our *Preliminary Results*, we have made revisions to the margin calculation for Hiep Thanh and Acomfish in the final results. For all changes to the calculations of Hiep Thanh and Acomfish, *see* the Final Decision Memo and company specific analysis memoranda. For changes to the surrogate values *see* Memorandum to the File, through Alex Villanueva, Program Manager, AC/CVD Operations, Office 9, from Alan Ray, case analyst, AD/CVD Operations, Office 9, and Fourth Antidumping Duty Third New Shipper Review of Certain Frozen Fish Fillets from the Socialist Republic of Vietnam: Surrogate Values for the Final Results.

Final Results of the Reviews

The weighted-average dumping margins for the POR are as follows:

CERTAIN FROZEN FISH FILLETS FROM VIETNAM

Manufacturer/Exporter	Weighted-Average Margin
Hiep Thanh	6.68
Acomfish	0.00

Assessment

The Department will determine, and U.S. Customs and Border Protection (''CBP'') shall assess, antidumping duties on all appropriate entries, pursuant to 19 CFR 351.212(b). We have calculated importer–specific duty assessment rates on a per-unit basis. Specifically, we divided the total dumping margins (calculated as the difference between normal value and export price or constructed export price) for each importer by the total quantity of subject merchandise sold to that importer during the POR to calculate a per-unit assessment amount. In this and future reviews, we will direct CBP to assess importer–specific assessment rates based on the resulting per-unit (*i.e.*, per–kilogram) rates by the weight in kilograms of each entry of the subject merchandise during the POR. The Department intends to issue appropriate assessment instructions directly to CBP 15 days after publication of the final results of these new shipper reviews.

Cash Deposit Requirements

The following cash deposit requirements will be effective upon publication of these final results of these new shipper reviews for all shipments of subject merchandise by Hiep Thanh and Acomfish, entered, or withdrawn from warehouse, for consumption on or after the publication date, as provided by section 751(a)(2)(C) of the Tariff Act of 1930, as amended (''Act''): (1) for subject merchandise produced and exported by Hiep Thanh, the cash deposit rate will be the percent listed above, or the equivalent per–unit rate, for subject merchandise produced and exported by Acomfish, the cash deposit rate will be zero; (2) for subject merchandise exported by Hiep Thanh or Acomfish, but not manufactured by Hiep Thanh or Acomfish, the cash deposit rate will continue to be the Vietnam-wide rate of 63.88 percent; and (3) for subject merchandise manufactured by Hiep Thanh or Acomfish, but exported by any party other than Hiep Thanh or Acomfish, the cash deposit rate will be the rate applicable to the exporter. These cash deposit requirements will remain in effect until further notice.

Reimbursement of Duties

This notice also serves as a final reminder to importers of their responsibility under 19 CFR 351.402(f) to file a certificate regarding the reimbursement of antidumping duties prior to liquidation of the relevant entries during this POR. Failure to comply with this requirement could result in the Department's presumption that reimbursement of antidumping duties has occurred and the subsequent assessment of doubled antidumping duties.

Administrative Protective Orders

This notice also serves as a reminder to parties subject to administrative protective orders (''APO'') of their responsibility concerning the return or destruction of proprietary information disclosed under APO in accordance with 19 CFR 351.305, which continues to govern business proprietary information in this segment of the proceeding. Timely written notification of the return/destruction of APO materials or conversion to judicial protective order is hereby requested. Failure to comply with the regulations and terms of an APO is a violation which is subject to sanction.

We are issuing and publishing this determination in accordance with sections 751(a)(2)(B) and 777(i) of the Act, and 19 CFR 351.214(h) and 351.221(b)(5).

Dated: June 15, 2009.

Ronald K. Lorentzen,

Acting Assistant Secretary for Import Administration.

Appendix I Decision Memorandum

COMMENT 1: SURROGATE FINANCIAL RATIOS
A. Apex[2] and Bionic[3]
B. Gemini[4]
COMMENT 2: SURROGATE VALUE FOR WHOLE LIVE FISH
COMMENT 3: RESCISSION OF ACOMFISH
COMMENT 4: HIEP THANH'S SALES TO COMPANY 1
COMMENT 5: HIEP THAN'S SALES TO COMPANY 2
COMMENT 6: ASSESSMENT OF DUTIES FOR HIEP THANH

[FR Doc. E9–14607 Filed 6–19–09; 8:45 am]

BILLING CODE 3510–DS–S

DEPARTMENT OF COMMERCE

Foreign-Trade Zones Board

[Order No. 1625]

Grant of Authority for Subzone Status, Thor Industries, Inc. (Recreational Vehicle Manufacturing), Jackson Center, Ohio

Pursuant to its authority under the Foreign-Trade Zones Act of June 18, 1934, as amended (19 U.S.C. 81a–81u), the Foreign-Trade Zones Board (the Board) adopts the following Order:

Whereas, the Foreign-Trade Zones Act provides for ''...the establishment... of foreign-trade zones in ports of entry of the United States, to expedite and encourage foreign commerce, and for other purposes,'' and authorizes the Foreign-Trade Zones Board to grant qualified corporations the privilege of establishing foreign-trade zones in or adjacent to U.S. Customs and Border Protection ports of entry;

Whereas, the Board's regulations (15 CFR Part 400) provide for the establishment of special-purpose subzones when existing zone facilities cannot serve the specific use involved, and when the activity results in a significant public benefit and is in the public interest;

Whereas, the Greater Dayton Foreign-Trade Zone Inc., grantee of Foreign-Trade Zone 100, has made application to the Board for authority to establish a

[2] Apex Foods Ltd. (''Apex'').
[3] Bionic Sea Food (''Bionic'').
[4] Gemini Sea Food Ltd. (''Gemini'').

special-purpose subzone at the recreational vehicle manufacturing facilities of Thor Industries, Inc., located in Jackson Center, Ohio (FTZ Docket 66–2008, filed 12/4/08);

Whereas, notice inviting public comment was given in the **Federal Register** (73 FR 76611–76612, 12/17/08); and,

Whereas, the Board adopts the findings and recommendations of the examiner's report, and finds the requirements of the FTZ Act and the Board's regulations are satisfied, and that approval of the application is in the public interest;

Now, therefore, the Board hereby grants authority for subzone status for activity related to recreational vehicle manufacturing at the facilities of Thor Industries, Inc., located in Jackson Center, Ohio (Subzone 100D), as described in the application and **Federal Register** notice, and subject to the FTZ Act and the Board's regulations, including Section 400.28.

Signed at Washington, D.C., this 12th day of June 2009.

Ronald K. Lorentzen,

Acting Assistant Secretary of Commerce for Import Administration, Alternate Chairman, Foreign-Trade Zones Board.

Attest:

Andrew McGilvray,

Executive Secretary.

[FR Doc. E9–14629 Filed 6–19–09; 8:45 am]

BILLING CODE 3510–DS–S

DEPARTMENT OF COMMERCE

Foreign-Trade Zones Board

[Order No. 1626]

Grant of Authority for Subzone Status, Thor Industries, Inc. (Recreational Vehicle and Commercial Bus Manufacturing), Goshen, Elkhart, Topeka, Bristol, Middlebury, Syracuse, Nappanee and Howe, Indiana

Pursuant to its authority under the Foreign-Trade Zones Act of June 18, 1934, as amended (19 U.S.C. 81a–81u), the Foreign-Trade Zones Board (the Board) adopts the following Order:

Whereas, the Foreign-Trade Zones Act provides for ''...the establishment... of foreign-trade zones in ports of entry of the United States, to expedite and encourage foreign commerce, and for other purposes,'' and authorizes the Foreign-Trade Zones Board to grant qualified corporations the privilege of establishing foreign-trade zones in or adjacent to U.S. Customs and Border Protection ports of entry;

Whereas, the Board's regulations (15 CFR Part 400) provide for the establishment of special-purpose subzones when existing zone facilities cannot serve the specific use involved, and when the activity results in a significant public benefit and is in the public interest;

Whereas, the St. Joseph County Airport Authority, grantee of Foreign-Trade Zone 125, has made application to the Board for authority to establish a special-purpose subzone at the recreational vehicle and commercial bus manufacturing facilities of Thor Industries, Inc., located in Goshen, Elkhart, Topeka, Bristol, Middlebury, Syracuse, Nappanee and Howe, Indiana (FTZ Docket 67–2008, filed 12/4/08);

Whereas, notice inviting public comment was given in the **Federal Register** (73 FR 76612–76613, 12/17/08); and,

Whereas, the Board adopts the findings and recommendations of the examiner's report, and finds the requirements of the FTZ Act and the Board's regulations are satisfied, and that approval of the application is in the public interest;

Now, therefore, the Board hereby grants authority for subzone status for activity related to recreational vehicle and commercial bus manufacturing at the facilities of Thor Industries, Inc., located in Goshen, Elkhart, Topeka, Bristol, Middlebury, Syracuse, Nappanee and Howe, Indiana (Subzone 125E), as described in the application and **Federal Register** notice, and subject to the FTZ Act and the Board's regulations, including Section 400.28.

Signed at Washington, D.C., this 12th day of June 2009.

Ronald K. Lorentzen,

Acting Assistant Secretary of Commerce, for Import Administration, Alternate Chairman, Foreign-Trade Zones Board.

Attest:

Andrew McGilvray,

Executive Secretary.

[FR Doc. E9–14627 Filed 6–19–09; 8:45 am]

BILLING CODE 3510–DS–S

DEPARTMENT OF COMMERCE

International Trade Administration

Manufacturing and Services' Sustainable Manufacturing Initiative; Update

ACTION: Notice of second round of regional showcase tours in support of Commerce's Sustainable Manufacturing Initiative; notice of event in Seattle; request for suggestions of other cities and regions to be considered for future tours; request for volunteer hosts to be considered for future tours.

SUMMARY: As part of its Sustainable Manufacturing Initiative, the International Trade Administration's Manufacturing & Services Unit is planning a second round of regional facility tours across the United States that will showcase sustainable business practices at manufacturing firms and service providers. This round of tours will use the past round of Sustainable Manufacturing American Regional Tours (SMARTs) as a template by traveling to a number of cities and regions in order to demonstrate the feasibility and viability of sustainable business practices for U.S. firms. While the previous round of tours focused on manufacturers, this round will look at supply chains in various regions and sustainability issues affecting the competitiveness of firms in those supply chains.

DATES: Submit comments no later than 30 days after the date of this notice.

ADDRESSES: Address all comments concerning this notice to the Sustainable Manufacturing Initiative, U.S. Department of Commerce, Room 2213, 1401 Constitution Ave., NW., Washington, DC 20230 (or via the Internet at *susmanuf@mail.doc.gov*).

FOR FURTHER INFORMATION CONTACT: Matthew Howard in Manufacturing & Services' Office of Trade Policy Analysis, 202–482–3703.

SUPPLEMENTARY INFORMATION:

Regional facility tours like the SMARTs are one of the main project areas of the Manufacturing and Services (MAS) Sustainable Manufacturing Initiative (SMI) and Public-Private Dialogue (for more information visit *http://www.manufacturing.gov/sustainability*). In order to provide effective and continued support to U.S. companies in their sustainable manufacturing efforts, MAS launched the SMI which (a) identifies U.S. industry's most pressing sustainability challenges and (b) facilitates public and private sector efforts to address these challenges.

As referenced in a July 2008 **Federal Register** notice (FR 42328, July 21, 2008), MAS held a series of SMARTs in 2008: St. Louis, MO (July 28, 2008), Grand Rapids, MI (September 3, 2008), and Rochester, NY (September 23, 2008). This first round of regional facility tours focused on U.S. manufacturers and showcased efforts at implementing and benefiting from cost-effective sustainable manufacturing practices. As company supply chains become the critical component to a

firm's competitiveness, working with manufacturers and service providers on their sustainability practices will take on increasing importance. U.S. companies are concerned with cutting costs, meeting new regulatory challenges, the lack of visibility that sustainable business practices receive nationwide, and the lack of information U.S. manufacturers and service providers possess in this field. In order to continue spreading awareness of the cost-effectiveness of implementing sustainable business practices, especially the importance of sustainable supply chains, both to U.S. global competitiveness and the environment, MAS will begin its second round of regional facility tours in Seattle, Washington in July 2009 and will aim to visit at least two additional regions by the end of 2009.

The goal of these tours is to demonstrate to other similarly situated firms in the area that incorporating sustainable business techniques into the production and distribution cycle is not cost-prohibitive and, in fact, can help the long-term economic viability of American firms.

The event in Seattle will most likely be held in mid-July and will likely include tours of four facilities engaged in sustainable business practices at various points in a supply chain. Environmental managers, plant managers and other relevant company decision-makers from local small and medium-sized manufacturers and service providers who are interested in attending this event should contact the sustainable manufacturing team through the email address listed above. The team, in consultation with the local U.S. Export Assistance Center and Washington Manufacturing Services, will make a determination on attendance on a first-come-first-served basis, taking into account the criteria named above as well as the U.S. Export Assistance Center and Washington Manufacturing Services' knowledge of the local economy and the relevance of the event to individual firms in the Seattle area and to strive for the tour participants to reflect the diversity of the local business community within the manufacturing industry sector. Only one representative from each company will be invited to attend.

Each of the future events will most likely include tours of local manufacturing and service provider facilities that showcase firms that are incorporating sustainable business techniques into their business operations or have facilities that are otherwise sustainable. Manufacturing and Services seeks public input on possible cities and/or regions that would benefit from hosting a sustainable supply chain event or firms that would be willing to demonstrate and showcase their sustainable business capabilities and practices as part of a possible regional facility tour in their region. Responses to this notice should include a brief rationale as to why a particular firm, city or region would be a strong candidate for one of these events. Participants will not be paid.

Dated: June 16, 2009.

Matthew Howard,

Office of Trade Policy Analysis.

[FR Doc. E9–14485 Filed 6–19–09; 8:45 am]

BILLING CODE 3510–DR–P

DEPARTMENT OF COMMERCE

National Oceanic and Atmospheric Administration

RIN 0648–XP89

Fisheries of the South Atlantic and Gulf of Mexico; Southeastern Data, Assessment, and Review (SEDAR); SEDAR 18 Atlantic Red Drum Assessment Panel; Public Meeting

AGENCY: National Marine Fisheries Service (NMFS), National Oceanic and Atmospheric Administration (NOAA), Commerce.

ACTION: Notice of SEDAR 18 Atlantic Red Drum Post-Assessment Workshop Conference Call.

SUMMARY: The SEDAR 18 Assessment Panel will meet via conference call to review preliminary assessment model results, select a preferred assessment model, and discuss future analytical needs. See **SUPPLEMENTARY INFORMATION.**

DATES: The SEDAR 18 Assessment Workshop Panel will meet on Wednesday, July 15, 2009, from 1 p.m. to 3 p.m. (EDST).

ADDRESSES: The meeting will be held via conference call. A listening station is available at the following location: South Atlantic Fishery Management Council, 4055 Faber Place Drive #201, North Charleston, SC 29405.

FOR FURTHER INFORMATION CONTACT: Dale L. Theiling, SEDAR Coordinator, SAFMC, 4055 Faber Place, Suite 201, North Charleston, SC 29405; telephone: (843) 571–4366 or toll free: (866) SAFMC–10; fax: (843) 769–4520.

SUPPLEMENTARY INFORMATION: The South Atlantic, Gulf of Mexico, and Caribbean Fishery Management Councils; in conjunction with NOAA Fisheries, the Atlantic States Marine Fisheries Commission, and the Gulf States Marine Fisheries Commission; implemented the Southeast Data, Assessment and Review (SEDAR) process, a multi-step method for determining the status of fish stocks. SEDAR 18 is developing an assessment of the Atlantic red drum stock.

During this conference call the SEDAR 18 Red Drum Assessment Panel will follow-up on activities from its June 1–5, 2009 meeting by reviewing preliminary assessment model results, selecting a preferred assessment model, and discussing future analytical needs.

Although non-emergency issues not contained in this agenda may come before this group for discussion, those issues may not be the subject of formal action during this meeting. Action will be restricted to those issues specifically listed in this notice and any issues arising after publication of this notice that require emergency action under section 305(c) of the Magnuson-Stevens Fishery Conservation and Management Act, provided the public has been notified of the Council's intent to take final action to address the emergency.

Special Accommodations

The listening station is physically accessible to people with disabilities. Requests for sign language interpretation or other auxiliary aids should be directed to the South Atlantic Fishery Management Council office at the address listed above at least 10 business days prior to the meeting.

Dated: June 17, 2009.

Tracey L. Thompson,

Acting Director, Office of Sustainable Fisheries, National Marine Fisheries Service.

[FR Doc. E9–14570 Filed 6–19–09; 8:45 am]

BILLING CODE 3510–22–S

DEPARTMENT OF COMMERCE

National Oceanic and Atmospheric Administration

RIN 0648–XP87

Mid-Atlantic Fishery Management Council; Public Meeting

AGENCY: National Marine Fisheries Service (NMFS), National Oceanic and Atmospheric Administration (NOAA), Commerce.

ACTION: Notice of public meetings.

SUMMARY: The Mid-Atlantic Fishery Management Council (MAFMC) will hold a public meeting on July 14, 2009. The MAFMC's Scientific and Statistical Committee (SSC) will hold a public meeting on July 15–16, 2009. The MAFMC's Summer Flounder, Scup, Black Sea Bass, and Bluefish Monitoring Committee's (MC) will hold a meeting on July 17, 2009.

DATES: Tuesday, July 14, 2009, from 8:30 a.m. to 4:30 p.m. (MAFMC Meeting); Wednesday and Thursday, July 15–16, 2009, from 8 a.m. to 5 p.m. (SSC Meeting); Friday, July 17, 2009, from 9 a.m. to 4 p.m. (MC Meetings)

ADDRESSES: The meeting will be held at the Hilton Philadelphia Airport, 4509 Island Avenue, Philadelphia, PA 19153; telephone: (215) 365–4150.

Council address: Mid-Atlantic Fishery Management Council, 300 S. New Street, Room 2115, Dover, DE 19904; telephone: (302) 674–2331.

FOR FURTHER INFORMATION CONTACT: Daniel T. Furlong, Executive Director, Mid-Atlantic Fishery Management Council, 300 S. New Street, Room 2115, Dover, DE 19904; telephone: (302) 674–2331, extension 19.

SUPPLEMENTARY INFORMATION: On July 14, the MAFMC will be meeting to discuss annual catch limits (ACLs) and accountability measures (AMs). Specifically, to determine how ACLs and AMs could be developed and applied to the MAFMC managed stocks. On July 15, the SSC will meet to discuss scientific uncertainty and the development of control rules for acceptable biological catch (ABC), as well as the issues relating to the development of a MAFMC risk policy. On July 16, the SSC will meet for a second day to review stock status and specify overfishing level and ABC for summer flounder, scup, black sea bass, and bluefish for 2010, and review and comment on proposed 2010 quota specifications and management measures for summer flounder, scup, black sea bass, and bluefish. On July 17, the Summer Flounder, Scup, Black Sea Bass, and Bluefish Monitoring Committee's will be meeting to recommend the 2010 commercial management measures, commercial quotas, and recreational harvest limits for summer flounder, scup, and black sea bass. The Bluefish Monitoring Committee will meet to recommend commercial management measures, recreational management measures, and a commercial quota for bluefish for 2010.

Although non-emergency issues not contained in this agenda may come before these groups for discussion, those issues may not be the subject of formal action during these meetings. Action will be restricted to those issues specifically listed in this notice and any issues arising after publication of this notice that require emergency action under section 305(c) of the Magnuson-Stevens Fishery Conservation and Management Act, provided the public has been notified of the Council's intent to take final action to address the emergency.

Special Accommodations

The meeting is physically accessible to people with disabilities. Requests for sign language interpretation or other auxiliary aids should be directed to M. Jan Bryan at the Mid-Atlantic Council Office, (302) 674–2331 extension 18, at least 5 days prior to the meeting date.

Dated: June 17, 2009.

Tracey L. Thompson,

Acting Director, Office of Sustainable Fisheries, National Marine Fisheries Service.

[FR Doc. E9–14571 Filed 6–19–09; 8:45 am]

BILLING CODE 3510–22–S

COMMODITY FUTURES TRADING COMMISSION

Meetings; Sunshine Act

AGENCY HOLDING THE MEETING: Commodity Futures Trading Commission.

TIME AND DATE: 2 p.m., July 15, 2009.

PLACE: 1155 21st St., NW., Washington, DC, 9th Floor Commission Conference Room.

STATUS: Closed.

MATTERS TO BE CONSIDERED: Enforcement Matters.

CONTACT PERSON FOR MORE INFORMATION: Sauntia S. Warfield, 202–418–5084.

Sauntia S. Warfield,

Assistant Secretary of the Commission.

[FR Doc. E9–14646 Filed 6–18–09; 11:15 am]

BILLING CODE 6351–01–P

DEPARTMENT OF DEFENSE

GENERAL SERVICES ADMINISTRATION

NATIONAL AERONAUTICS AND SPACE ADMINISTRATION

[OMB Control No. 9000–0079]

Federal Acquisition Regulation; Submission for OMB Review; Corporate Aircraft Costs

AGENCY: Department of Defense (DOD), General Services Administration (GSA), and National Aeronautics and Space Administration (NASA).

ACTION: Notice of request for comments regarding an extension to an existing OMB clearance.

SUMMARY: Under the provisions of the Paperwork Reduction Act of 1995 (44 U.S.C. Chapter 35), the Federal Acquisition Regulation (FAR) Regulatory Secretariat will be submitting to the Office of Management and Budget (OMB) a request to review and approve an extension of a currently approved information collection requirement concerning Corporate Aircraft Costs. A request for public comments was published in the **Federal Register** at 74 FR 17866, April 17, 2009.

Public comments are particularly invited on: Whether this collection of information is necessary; whether it will have practical utility; whether our estimate of the public burden of this collection of information is accurate, and based on valid assumptions and methodology; ways to enhance the quality, utility, and clarity of the information to be collected; and ways in which we can minimize the burden of the collection of information on those who are to respond, through the use of appropriate technological collection techniques or other forms of information technology.

DATES: Submit comments on or before July 22, 2009.

ADDRESSES: Submit comments regarding this burden estimate or any other aspect of this collection of information, including suggestions for reducing this burden to: General Services Administration (GSA), OMB Desk Officer, Room 10236, NEOB, Washington, DC 20503, and send a copy to the Regulatory Secretariat (VPR), 1800 F Street, NW., Room 4041, Washington, DC 20405. Please cite OMB Control No. 9000–0079, Corporate Aircraft Costs, in all correspondence.

FOR FURTHER INFORMATION CONTACT: Mr. Edward Chambers, Procurement Analyst, Contract Policy Division, GSA, (202) 501–3221.

A. Purpose

Government contractors that use company aircraft must maintain logs of flights containing specified information to ensure that costs are properly charged against Government contracts and that directly associated costs of unallowable activities are not charged to such contracts.

B. Annual Reporting Burden

Number of Respondents: 3,000.
Responses per Respondent: 1.
Total Responses: 3,000.
Hours per Response: 6.
Total Burden Hours: 18,000.

Obtaining Copies of Proposals: Requesters may obtain a copy of the information collection documents from the General Services Administration, Regulatory Secretariat (VPR), 1800 F Street, NW., Room 4041, Washington, DC 20405, telephone (202) 501–4755.

Please cite OMB Control No. 9000–0079, Corporate Aircraft Costs, in all correspondence.

Dated: June 16, 2009.

Al Matera,

Director, Office of Acquisition Policy.

[FR Doc. E9–14534 Filed 6–19–09; 8:45 am]

BILLING CODE 6820–EP–P

DEPARTMENT OF DEFENSE

Office of the Secretary

Reserve Forces Policy Board (RFPB)

AGENCY: Department of Defense; Office of the Secretary of Defense Reserve Forces Policy Board.

ACTION: Notice of meeting.

SUMMARY: Under the provisions of the Federal Advisory Committee Act of 1972 (5 U.S.C., Appendix, as amended), the Government in the Sunshine Act of 1976 (5 U.S.C. 552b, as amended), and 41 CFR 102–3.150, the Department of Defense announces that the following Federal advisory committee meeting of the Reserve Forces Policy Board (RFPB) will take place.

Due to scheduling difficulties the Reserve Forces Policy Board was unable to finalize its agenda in time to publish notice of its meeting in the **Federal Register** for the 15-calendar days required by 41 CFR 102–3.150(a). Accordingly, the Committee Management Officer for the Department of Defense, pursuant to 41 CFR 102–3.150(b), waives the 15-calendar day notification requirement.

DATES: June 24, 2009 from 8 a.m.–4 p.m. and June 25, 2009 from 8:30 a.m.–3 p.m.

ADDRESSES: Meeting address is the Pentagon, Conference Room 3E863, Arlington, VA. Mailing address is Reserve Forces Policy Board, 7300 Defense Pentagon, Washington, DC 20301–7300.

FOR FURTHER INFORMATION CONTACT: Col. Marjorie Davis, Designated Federal Officer, (703) 697–4486 (Voice), (703) 614–0504 (Facsimile), *marjorie.davis@osd.mil.* Mailing address is Reserve Forces Policy Board, 7300 Defense Pentagon, Washington, DC 20301–7300.

SUPPLEMENTARY INFORMATION:

Purpose of the Meeting: A quarterly meeting of the Reserve Forces Policy Board.

Agenda: Discussion of readiness and other issues relevant to the Reserve Components.

Public's Accessibility to the Meeting: Pursuant to 5 U.S.C. 552b(c)1, as amended, the meeting will be closed.

Written Statements: Pursuant to 41 CFR 102–3.105(j) and 102–3.140, the public or interested organizations may submit written statements to the membership of the Reserve Forces Policy Board at any time or in response to the stated agenda of a planned meeting. Written statements should be submitted to the Reserve Forces Policy Board's Designated Federal Officer. The Designated Federal Officer's contact information can be obtained from the GSA's FACA Database—*https://www.fido.gov/facadatabase/public.asp.*

Written statements that do not pertain to a scheduled meeting of the Reserve Forces Policy Board may be submitted at any time. However, if individual comments pertain to a specific topic being discussed at a planned meeting then these statements must be submitted within five business days of the meeting in question. The Designated Federal Officer will review all submitted written statements and provide copies to all the committee members.

Dated: June 12, 2009.

Patricia L. Toppings,

OSD Federal Register Liaison Officer, Department of Defense.

[FR Doc. E9–14488 Filed 6–19–09; 8:45 am]

BILLING CODE 5001–06–P

DEPARTMENT OF EDUCATION

Submission for OMB Review; Comment Request

AGENCY: Department of Education.

SUMMARY: The Director, Information Collection Clearance Division, Regulatory Information Management Services, Office of Management invites comments on the submission for OMB review as required by the Paperwork Reduction Act of 1995.

DATES: Interested persons are invited to submit comments on or before July 22, 2009.

ADDRESSES: Written comments should be addressed to the Office of Information and Regulatory Affairs, *Attention:* Education Desk Officer, Office of Management and Budget, 725 17th Street, NW., Room 10222, New Executive Office Building, Washington, DC 20503, be faxed to (202) 395–5806 or send e-mail to *oira_submission@omb.eop.gov.*

SUPPLEMENTARY INFORMATION: Section 3506 of the Paperwork Reduction Act of 1995 (44 U.S.C. Chapter 35) requires that the Office of Management and Budget (OMB) provide interested Federal agencies and the public an early opportunity to comment on information collection requests. OMB may amend or waive the requirement for public consultation to the extent that public participation in the approval process would defeat the purpose of the information collection, violate State or Federal law, or substantially interfere with any agency's ability to perform its statutory obligations. The Director, Regulatory Information Management Services, Office of Management, publishes that notice containing proposed information collection requests prior to submission of these requests to OMB. Each proposed information collection, grouped by office, contains the following: (1) Type of review requested, e.g., new, revision, extension, existing or reinstatement; (2) Title; (3) Summary of the collection; (4) Description of the need for, and proposed use of, the information; (5) Respondents and frequency of collection; and (6) Reporting and/or Recordkeeping burden. OMB invites public comment.

Dated: June 16, 2009.

Angela C. Arrington,

Director, Information Clearance Collection Division, Regulatory Information Management Services, Office of Management.

Office of Planning, Evaluation and Policy Development

Type of Review: New.

Title: Evaluation of State and Local Implementation of Title III Standards, Assessments, and Accountability Systems.

Frequency: One time.

Affected Public: State, Local, or Tribal Gov't, SEAs or LEAs.

Reporting and Recordkeeping Hour Burden:

Responses: 1,940.

Burden Hours: 1,600.

Abstract: The study will serve to update state-level information about Title III implementation and will also provide an important opportunity to go beyond the mechanics of implementation to answer a series of key evaluation questions that will deepen understanding of the extent to which Title III is achieving its underlying goals. The study has four interrelated objectives: (1) To describe the progress in implementation of Title III provisions, and variation in implementation across states; (2) To examine how localities are implementing their programs for limited English proficient (LEP) students and how these relate to state policies and contexts; (3) To determine how LEP students are faring in the development of their English language proficiency (ELP) and mastery of academic content; and (4) To maintain a focus on the

diversity among LEP students—for example, in their concentrations, languages, ages, length of residence in the U.S.—and the educational implications of this diversity. Data will be collected through a thorough review of standards and assessments; a complete set of interviews of state Title III and assessment directors; a nationally representative survey of districts receiving Title III funds; in depth case studies in 5 states, including 2 districts within each state; and analyses of student achievement data. Respondents will include 51 state Title III directors, 1,300 District Title III administrators, 96 other district administrators, 192 elementary and secondary school principals and resource staff, 192 elementary and secondary teachers, and 96 parent liaisons. The study will produce several policy-relevant reports and presentations including briefings, evaluation briefs, fact sheets, reports, and nontechnical executive summaries that will provide policymakers, educators, media, researchers, and the public with a comprehensive view of state and local implementation of Title III across the nation as of 2009–10.

Requests for copies of the information collection submission for OMB review may be accessed from *http://edicsweb.ed.gov,* by selecting the ''Browse Pending Collections'' link and by clicking on link number 3992. When you access the information collection, click on ''Download Attachments'' to view. Written requests for information should be addressed to U.S. Department of Education, 400 Maryland Avenue, SW., LBJ, Washington, DC 20202–4537. Requests may also be electronically mailed to the Internet address *ICDocketMgr@ed.gov* or faxed to 202–401–0920. Please specify the complete title of the information collection when making your request.

Comments regarding burden and/or the collection activity requirements should be electronically mailed to *ICDocketMgr@ed.gov.* Individuals who use a telecommunications device for the deaf (TDD) may call the Federal Information Relay Service (FIRS) at 1–800–877–8339.

[FR Doc. E9–14535 Filed 6–19–09; 8:45 am]

BILLING CODE 4000–01–P

DEPARTMENT OF EDUCATION

National Advisory Committee on Institutional Quality and Integrity; Notice of Members

AGENCY: National Advisory Committee on Institutional Quality and Integrity (NACIQI or the Committee), Department of Education.

ACTION: Request for nominations of individuals to serve on NACIQI.

SUMMARY: Section 106 of the Higher Education Opportunity Act 2008 (HEOA) suspended the activities of NACIQI and terminated the existing membership on August 14, 2008. The law also stated that the appointment of any new members could not take place until after January 31, 2009. In addition, section 106 restructured the NACIQI's membership to provide for 18 members, six of whom shall be appointed by the Secretary of Education (Secretary). At this time, the Secretary invites interested parties to submit nominations for the six positions to be filled by the Secretary. Nomination Process: Any interested person or organization may nominate one or more qualified individuals for membership. If you would like to nominate an individual or yourself for appointment to NACIQI, submit the following information to the U.S. Department of Education's (the Department's) White House Liaison Office.

- A copy of the nominee's resume;
- A cover letter that provides your reason(s) for nominating the individual; and
- Contact information for the nominee (name, title, business address, business phone, fax number and business e-mail address).

In addition, the cover letter must state that the nominee (if nominating someone other than yourself) has agreed to be nominated and is willing to serve on NACIQI for a three-year term.

DATES: Nominations for the six members to be appointed by the Secretary must be submitted (postmarked, if sending by mail; submitted electronically; or received, if hand delivered) by July 22, 2009.

ADDRESSES: You may submit nominations, including attachments, by any of the following methods:

- *Electronically:* Send to *WhiteHouseLiaison@ed.gov.*
- *Mail, express delivery, hand delivery, messenger or courier service:* Submit three copies of your documents listed above to the following address: U.S. Department of Education, White House Liaison Office, 400 Maryland Avenue, SW., Room 7C109, Washington, DC 20202 Attn: Karen Akins.

The initial term of service for each Secretarial appointee will be for a period of three years. If a member vacancy occurs prior to the term's expiration date, the Secretary will appoint a new member to serve the remainder of the term. A member may be appointed, at the Secretary's discretion, to serve more than one term. Succeeding terms will be for six years.

Individuals shall be appointed members of the Committee:

- From among individuals who are representatives of, or knowledgeable concerning, education and training beyond secondary education, representing all sectors and types of institutions of higher education; and
- On the basis of the individuals' technical qualifications, professional standing, and demonstrated knowledge in the fields of accreditation and administration of higher education;
- On the basis of the individuals' experience, integrity, impartiality, and good judgment.

The NACIQI'S Functions: The NACIQI meets at least twice a year and provides recommendations to the Secretary of Education pertaining to:

- The establishment and enforcement of criteria for recognition of accrediting agencies subpart 2 of part H of Title IV, HEA;
- The recognition of specific accrediting agencies and State approval agencies;
- The preparation and publication of the list of nationally recognized accrediting agencies and State approval agencies;
- The eligibility and certification process for institutions of higher education under Title IV, HEA;
- The relationship between (1) Accreditation of institutions of higher education and the certification and eligibility of such institutions, and (2) State licensing responsibilities with respect to such institutions; and
- Any other advisory functions relating to accreditation and institutional eligibility that the Secretary may prescribe.

Additional Information About NACIQI: Refer to the NACIQI's Web site (*http://www.ed.gov/about/bdscomm/list/naciqi.html*) for further information. If you have specific questions about the nomination process, please contact Karen Akins, White House Liaison Office, telephone: (202) 401–3677, fax: (202) 205–0723, e-mail: *WhiteHouseLiaison@ed.gov.*

Authority: 20 U.S.C. 1011c.

Dated: June 16, 2009.

Arne Duncan,

Secretary, U.S. Department of Education.

[FR Doc. E9–14612 Filed 6–19–09; 8:45 am]

BILLING CODE 4000–01–P

DEPARTMENT OF ENERGY

DOE/NSF Nuclear Science Advisory Committee

AGENCY: Department of Energy, Office of Science.

ACTION: Notice of open meeting.

SUMMARY: This notice announces a meeting of the DOE/NSF Nuclear Science Advisory Committee (NSAC). Federal Advisory Committee Act (Pub. L. 92–463, 86 Stat. 770) requires that public notice of these meetings be announced in the **Federal Register**.

DATES: Monday, July 27, 2009, 8 a.m. to 5 p.m.

ADDRESSES: Marriott Crystal City at Reagan National Airport, 1999 Jefferson Davis Highway, Arlington, Virginia 22202.

FOR FURTHER INFORMATION CONTACT: Brenda L. May, U.S. Department of Energy; SC–26/Germantown Building, 1000 Independence Avenue, SW., Washington, DC 20585–1290; Telephone: 301–903–0536.

SUPPLEMENTARY INFORMATION:

Purpose of Meeting: To provide advice and guidance on a continuing basis to the Department of Energy and the National Science Foundation on scientific priorities within the field of basic nuclear science research.

Tentative Agenda: Agenda will include discussions of the following:

Monday, July 27, 2009

- Perspectives from Department of Energy and National Science Foundation.
- Presentation and Discussion of the Interim Report II from the Isotope Subcommittee.
- Discussion of the FY 2010 Budget.
- Discussion of the Committee of Visitors Charge.
- Public Comment (10-minute rule).

Public Participation: The meeting is open to the public. If you would like to file a written statement with the Committee, you may do so either before or after the meeting. If you would like to make oral statements regarding any of these items on the agenda, you should contact Brenda L. May, 301–903–0536 or *Brenda.May@science.doe.gov* (e-mail). You must make your request for an oral statement at least 5 business days before the meeting. Reasonable provision will be made to include the scheduled oral statements on the agenda. The Chairperson of the Committee will conduct the meeting to facilitate the orderly conduct of business. Public comment will follow the 10-minute rule.

Minutes: The minutes of the meeting will be available on the U.S. Department of Energy's *Office of Nuclear Physics* Web site for viewing.

Dated: Issued in Washington, DC on June 17, 2009.

Rachel Samuel,

Deputy Committee Management Officer.

[FR Doc. E9–14635 Filed 6–19–09; 8:45 am]

BILLING CODE 6450–01–P

DEPARTMENT OF ENERGY

Environmental Management Site-Specific Advisory Board, Oak Ridge Reservation

AGENCY: Department of Energy.

ACTION: Notice of open meeting.

SUMMARY: This notice announces a meeting of the Environmental Management Site-Specific Advisory Board (EM SSAB), Oak Ridge Reservation. The Federal Advisory Committee Act (Pub. L. 92–463, 86 Stat. 770) requires that public notice of this meeting be announced in the **Federal Register**.

DATES: Wednesday, July 8, 2009, 6 p.m.

ADDRESSES: DOE Information Center, 475 Oak Ridge Turnpike, Oak Ridge, Tennessee.

FOR FURTHER INFORMATION CONTACT: Pat Halsey, Federal Coordinator, Department of Energy Oak Ridge Operations Office, P.O. Box 2001, EM–90, Oak Ridge, TN 37831. Phone (865) 576–4025; Fax (865) 576–2347 or e-mail: *halseypj@oro.doe.gov* or check the Web site at *http://www.oakridge.doe.gov/em/ssab.*

SUPPLEMENTARY INFORMATION:

Purpose of the Board: The purpose of the Board is to make recommendations to DOE in the areas of environmental restoration, waste management, and related activities.

Tentative Agenda: The main meeting presentation will be on DOE's CERCLA and Other Waste Landfills.

Public Participation: The EM SSAB, Oak Ridge, welcomes the attendance of the public at its advisory committee meetings and will make every effort to accommodate persons with physical disabilities or special needs. If you require special accommodations due to a disability, please contact Pat Halsey at least seven days in advance of the meeting at the phone number listed above. Written statements may be filed with the Board either before or after the meeting. Individuals who wish to make oral statements pertaining to the agenda item should contact Pat Halsey at the address or telephone number listed above. Requests must be received five days prior to the meeting and reasonable provision will be made to include the presentation in the agenda. The Deputy Designated Federal Officer is empowered to conduct the meeting in a fashion that will facilitate the orderly conduct of business. Individuals wishing to make public comment will be provided a maximum of five minutes to present their comments.

Minutes: Minutes will be available by writing or calling Pat Halsey at the address and phone number listed above. Minutes will also be available at the following Web site: *http://www.oakridge.doe.gov/em/ssab/minutes.htm.*

Issued at Washington, DC on June 17, 2009.

Rachel Samuel,

Deputy Committee Management Officer.

[FR Doc. E9–14636 Filed 6–19–09; 8:45 am]

BILLING CODE 6450–01–P

ENVIRONMENTAL PROTECTION AGENCY

[Docket ID Number EPA–HQ–OECA–2008–0804; FRL–8920–4]

Clean Water Act Class II: Proposed Administrative Settlement, Penalty Assessment and Opportunity To Comment Regarding Cellco Partnership Doing Business as Verizon Wireless

AGENCY: Environmental Protection Agency (EPA).

ACTION: Notice.

SUMMARY: EPA has entered into a consent agreement with Cellco Partnership doing business as Verizon Wireless (Verizon or Respondent) to resolve violations of the Clean Water Act (CWA), the Emergency Planning and Community Right-to-Know Act (EPCRA), and the Clean Air Act (CAA) and their implementing regulations.

The Administrator is hereby providing public notice of this Consent Agreement and proposed Final Order, and providing an opportunity for interested persons to comment on the CWA portions of this Consent Agreement, in accordance with CWA Section 311(b)(6)(C). Additionally, notice is being provided on the EPCRA and CAA portions of this Consent Agreement.

DATES: Comments are due on or before July 22, 2009.

ADDRESSES: Comments may be submitted electronically, by mail, or through hand delivery/courier. Follow the detailed instructions as provided in

Section I.B of the **SUPPLEMENTARY INFORMATION** section.

FOR FURTHER INFORMATION CONTACT: Beth Cavalier, Special Litigation and Projects Division (2248–A), U.S. Environmental Protection Agency, 1200 Pennsylvania Avenue, NW., Washington, DC 20460; telephone (202) 564–3271; fax: (202) 564–9001; e-mail: *cavalier.beth@epa.gov*.

SUPPLEMENTARY INFORMATION:

I. General Information

A. How Can I Get Copies of This Document and Other Related Information?

1. *Docket.* EPA has established an official public docket for this action under Docket ID No. EPA–HQ–OECA–2008–0804.

The official public docket consists of the Consent Agreement, proposed Final Order, and any public comments received. Although a part of the official docket, the public docket does not include Confidential Business Information (CBI) or other information whose disclosure is restricted by statute. The official public docket is the collection of materials that is available for public viewing at the Enforcement and Compliance Docket Information Center (ECDIC) in the EPA Docket Center (EPA/DC), EPA West, Room B102, 1301 Constitution Ave., NW., Washington, DC. The EPA Docket Center Public Reading Room is open from 8:30 a.m. to 4:30 p.m., Monday through Friday, excluding legal holidays. The telephone number for the Public Reading Room is (202) 566–1744, and the telephone number for the ECDIC is (202) 566–1752. A reasonable fee may be charged by EPA for copying docket materials.

2. *Electronic Access.* You may access this **Federal Register** document electronically through the EPA Internet under the ''Federal Register'' listings at *http://www.epa.gov/fedrgstr/.*

An electronic version of the public docket is available through EPA's electronic public docket and comment system (EPA Dockets). You may use EPA Dockets at *http://www.regulations.gov/* to submit or view public comments, access the index listing of the contents of the official public docket, and to access those documents in the public docket that are available electronically. Once in the system, select ''search,'' then key in Docket ID No. EPA–HQ–OECA–2008–0804.

Certain types of information will not be placed in the EPA Dockets. Information claimed as CBI and other information whose disclosure is restricted by statute, which is not included in the official public docket, will not be available for public viewing in EPA's electronic public docket. EPA's policy is that copyrighted material will not be placed in EPA's electronic public docket but will be available only in printed, paper form in the official public docket. To the extent feasible, publicly available docket materials will be made available in EPA's electronic public docket. When a document is selected from the index list in EPA Dockets, the system will identify whether the document is available for viewing in EPA's electronic public docket. Although not all docket materials may be available electronically, you may still access any of the publicly available docket materials through the docket facility identified in Section I.A.1.

For public commenters, it is important to note that EPA's policy is that public comments, whether submitted electronically or in paper, will be made available for public viewing in EPA's electronic public docket as EPA receives them and without change, unless the comment contains copyrighted material, CBI, or other information whose disclosure is restricted by statute. When EPA identifies a comment containing copyrighted material, EPA will provide a reference to that material in the version of the comment that is placed in EPA's electronic public docket. The entire printed comment, including the copyrighted material, will be available in the public docket.

Public comments submitted on computer disks that are mailed or delivered to the docket will be transferred to EPA's electronic public docket. Public comments that are mailed or delivered to the docket will be scanned and placed in EPA's electronic public docket. Where practical, physical objects will be photographed, and the photograph will be placed in EPA's electronic public docket along with a brief description written by the docket staff.

B. How and To Whom Do I Submit Comments?

You may submit comments electronically, by mail, or through hand delivery/courier. To ensure proper receipt by EPA, identify the appropriate docket identification number in the subject line on the first page of your comment. Please ensure that your comments are submitted within the specified comment period. Comments received after the close of the comment period will be marked ''late.'' EPA is not required to consider these late comments.

1. *Electronically.* If you submit an electronic comment as prescribed below, EPA recommends that you include your name, mailing address, and an e-mail address or other contact information in the body of your comment. Also include this contact information on the outside of any disk or CD ROM you submit, and in any cover letter accompanying the disk or CD ROM. This ensures that you can be identified as the submitter of the comment and allows EPA to contact you in case EPA cannot read your comment due to technical difficulties or needs further information on the substance of your comment. EPA's policy is that EPA will not edit your comment, and any identifying or contact information provided in the body of a comment will be included as part of the comment that is placed in the official public docket, and made available in EPA's electronic public docket. If EPA cannot read your comment due to technical difficulties and cannot contact you for clarification, EPA may not be able to consider your comment.

i. *EPA Dockets.* Your use of EPA's electronic public docket to submit comments to EPA electronically is EPA's preferred method for receiving comments. Go directly to EPA Dockets at *http://www.regulations.gov,* and follow the online instructions for submitting comments. Once in the system, select ''search,'' and then key in Docket ID No. EPA–HQ–OECA–2008–0804. The system is an ''anonymous access'' system, which means EPA will not know your identity, e-mail address, or other contact information unless you provide it in the body of your comment.

ii. *E-mail.* Comments may be sent by electronic mail (e-mail) to *docket.oeca@epa.gov,* Attention Docket ID No. EPA–HQ–OECA–2008–0804. In contrast to EPA's electronic public docket, EPA's e-mail system is not an ''anonymous access'' system. If you send an e-mail comment directly to the Docket without going through EPA's electronic public docket, EPA's e-mail system automatically captures your e-mail address. E-mail addresses that are automatically captured by EPA's e-mail system are included as part of the comment that is placed in the official public docket, and made available in EPA's electronic public docket.

iii. *Disk or CD ROM.* You may submit comments on a disk or CD ROM that you mail to the mailing address identified in Section I.A.1. These electronic submissions will be accepted in WordPerfect or ASCII file format. Avoid the use of special characters and any form of encryption.

2. *By Mail.* Send your comments to: Enforcement and Compliance Docket Information Center, Environmental Protection Agency, Mailcode: 2201T, 1200 Pennsylvania Ave., NW., Washington, DC, 20460, Attention Docket ID No. EPA–HQ–OECA–2008–0804.

3. *By Hand Delivery or Courier.* Deliver your comments to the address provided in Section I.A.1., Attention Docket ID No. EPA–HQ–OECA–2008–0804. Such deliveries are only accepted during the Docket's normal hours of operation as identified in Section I.A.1.

C. How Should I Submit CBI to the Agency?

Do not submit information that you consider to be CBI electronically through EPA's electronic public docket or by e-mail. You may claim information that you submit to EPA as CBI by marking any part or all of that information as CBI (if you submit CBI on disk or CD ROM, mark the outside of the disk or CD ROM as CBI and then identify electronically within the disk or CD ROM the specific information that is CBI). Information so marked will not be disclosed except in accordance with procedures set forth in 40 CFR part 2.

In addition to one complete version of the comment that includes any information claimed as CBI, a copy of the comment that does not contain the information claimed as CBI must be submitted for inclusion in the public docket and EPA's electronic public docket. If you submit the copy that does not contain CBI on disk or CD ROM, mark the outside of the disk or CD ROM clearly that it does not contain CBI. Information not marked as CBI will be included in the public docket and EPA's electronic public docket without prior notice. If you have any questions about CBI or the procedures for claiming CBI, please consult the person identified in the **FOR FURTHER INFORMATION CONTACT** section.

II. Background

Respondent is a telecommunications company located at One Verizon Way, Basking Ridge, New Jersey 07920, and Respondent is a partnership organized under the laws of the State of Delaware.

On November 3, 2006, Respondent entered into a Compliance Audit Agreement with EPA, in which Respondent agreed to conduct a systematic, documented, periodic, and objective review of its compliance with applicable provisions of the CAA, EPCRA, and CWA. Respondent further agreed to submit bi-annual progress reports detailing the status of the compliance audit, specific facilities reviewed, and detailed information setting forth violations discovered and corrective actions taken. Further, Respondent agreed, in entering into the Compliance Audit Agreement, to specific civil penalties for certain violations of the CWA, EPCRA, and the CAA. As agreed upon with EPA, Respondent submitted periodic progress reports and submitted a final audit report to EPA on April 18, 2008.

Specifically, Respondent disclosed that it failed to prepare and implement a Spill Prevention, Control, and Countermeasure (SPCC) plan and/or failed to have adequate secondary containment in violation of CWA Section 311(j), 33 U.S.C.1321(j), and 40 CFR part 112 for sixteen facilities located in the following States: Alabama, California, Colorado, Idaho, Louisiana, Maryland, Montana, North Carolina, Ohio, Texas, and Utah.

EPA, as authorized by CWA Section 311(b)(6), 33 U.S.C. 1321(b)(6), has assessed a civil penalty for these violations.

Respondent disclosed that it had failed to comply with EPCRA Section 302, 42 U.S.C. 11002, and the regulations found at 40 CFR 355.30, when it failed to notify the State Emergency Response Committee (SERC) for thirteen facilities located in the following States: California, Georgia, Illinois, Indiana, Massachusetts, Maryland, Michigan, New York, and Texas. EPA, as authorized by EPCRA Section 325, 42 U.S.C. 11045, has assessed a civil penalty for these violations.

In addition, Respondent disclosed that it had failed to comply with EPCRA Section 311, 42 U.S.C. 11021, and the regulations found at 40 CFR 370.21, when it failed to submit a Material Safety Data Sheet (MSDS) for a hazardous chemical(s) or, in the alternative, a list of such chemicals, at three hundred thirty-one facilities located in the following States: Arizona, California, Colorado, Connecticut, District of Columbia, Florida, Georgia, Hawaii, Illinois, Indiana, Iowa, Kansas, Kentucky, Louisiana, Maine, Maryland, Massachusetts, Michigan, Minnesota, Missouri, Montana, Nevada, New Hampshire, New Jersey, New Mexico, New York, Ohio, Pennsylvania, Rhode Island, South Carolina, Tennessee, Texas, Utah, Virginia, Washington, and Wyoming.

Respondent disclosed that it had failed to comply with EPCRA Section 312, 42 U.S.C. 11022, and the regulations found at 40 CFR 370.25, when it failed to prepare and submit emergency and chemical inventory forms to the Local Emergency Planning Committee (LEPC), the SERC and the fire department with jurisdiction over each facility, at three hundred and thirty-two facilities located in the following States: Arizona, California, Colorado, Connecticut, District of Columbia, Florida, Georgia, Hawaii, Illinois, Indiana, Iowa, Kansas, Kentucky, Louisiana, Maine, Maryland, Massachusetts, Michigan, Minnesota, Missouri, Montana, Nevada, New Hampshire, New Jersey, New Mexico, New York, Ohio, Pennsylvania, Rhode Island, South Carolina, Tennessee, Texas, Utah, Virginia, Washington, and Wyoming. EPA, as authorized by EPCRA Section 325, 42 U.S.C. 11045, has assessed a civil penalty for these violations.

Respondent further disclosed that it had failed to comply with EPCRA Section 312, 42 U.S.C. 11022, and the regulations found at 40 CFR 370.25, when it failed to prepare and submit emergency and chemical inventory forms to the LEPC, the SERC and the fire department with jurisdiction over each facility, at two hundred and forty-eight facilities located in the following States: Arizona, California, Florida, Georgia, Indiana, Iowa, Kansas, Kentucky, Maine, Maryland, Massachusetts, Minnesota, Missouri, Montana, New Hampshire, New York, North Dakota, Ohio, Rhode Island, South Dakota, Tennessee, Virginia, Washington, and Wisconsin. However, as Respondent made a good faith effort to comply and relied on information from the manufacturer as to the amount of sulfuric acid present in the batteries to make its reporting determination, that information was later found to be inaccurate by Respondent, and Respondent notified EPA of the potential violations, EPA is not proposing to assess a penalty for these violations.

Respondent disclosed that it had failed to comply with CAA Section 110, 42 U.S.C. 7410, and requirements adopted as part of State Implementation Plans (SIPs) for sixty-one facilities located in the following States: California, District of Columbia, Georgia, Maryland, and New Mexico.

EPA, as authorized by CAA Section 113, 42 U.S.C. 7413, has assessed a civil penalty for these violations.

EPA determined that Respondent satisfactorily completed its audit and has met all conditions of the Compliance Audit Agreement. EPA proposed a settlement penalty amount of four hundred sixty-eight thousand and six hundred dollars ($468,600). This amount is based on the penalty amounts agreed upon in the Compliance Audit Agreement for certain violations

and reflects consideration of potential economic benefit gained by Respondent, attributable to its delayed compliance with the CWA, EPCRA, and CAA regulations, and the potential for harm that could have resulted from the violations.

The total civil penalty assessed for settlement purposes is four hundred sixty-eight thousand and six hundred dollars ($468,600). Respondent has agreed to pay this amount. EPA and Respondent negotiated and signed an administrative consent agreement, following the Consolidated Rules of Practice, 40 CFR 22.13(b), on May 14, 2009 (*In Re: Cellco Partnership doing business as Verizon Wireless.* Docket Nos. CWA–HQ–2008–8002, EPCRA–HQ–2008–8002, CAA–HQ–2008–8002). This consent agreement is subject to public notice and comment under CWA Section 311(b)(6), 33 U.S.C. 1321(b)(6). The full consent agreement is available for public review and comment at *http://www.regulations.gov*, Docket ID No. EPA–HQ–OECA–2008–0804.

Under CWA Section 311(b)(6)(A), 33 U.S.C. 1321(b)(6)(A), any owner, operator, or person in charge of a vessel, onshore facility, or offshore facility from which oil is discharged in violation of CWA Section 311(b)(3), 33 U.S.C. 1321(b)(3), or who fails or refuses to comply with any regulations that have been issued under CWA Section 311(j), 33 U.S.C. 1321(j), may be assessed an administrative civil penalty of up to $177,500 by EPA. Class II proceedings under CWA Section 311(b)(6), 33 U.S.C. 1321(b)(6), are conducted in accordance with 40 CFR Part 22.

Under EPCRA Section 325, 42 U.S.C. 11045, the Administrator may issue an administrative order assessing a civil penalty against any person who has violated applicable emergency planning or right-to-know requirements, or any other requirement of EPCRA. Proceedings under EPCRA Section 325, 42 U.S.C. 11045, are conducted in accordance with 40 CFR part 22.

Under CAA Section 113, 42 U.S.C. 7413, the Administrator may issue an administrative penalty order to any person who has violated or is in violation of any requirement or prohibition of an applicable implementation plan or permit. Proceedings under CAA Section 113, 42 U.S.C. 7413, are conducted in accordance with 40 CFR part 22.

The procedures by which the public may comment on a proposed Class II penalty order, or participate in a CWA Class II penalty proceeding, are set forth in 40 CFR 22.45. The deadline for submitting public comment on this proposed final order July 22, 2009. All comments will be transferred to the Environmental Appeals Board (EAB) of EPA for consideration. The powers and duties of the EAB are outlined in 40 CFR 22.4(a).

Pursuant to CWA Section 311(b)(6)(C), 33 U.S.C. 1321(b)(6), EPA will not issue an order in this proceeding prior to the close of the public comment period.

Dated: June 10, 2009.

Bernadette Rappold,

Director, Special Litigation and Projects Division, Office of Enforcement and Compliance Assurance.

[FR Doc. E9–14599 Filed 6–19–09; 8:45 am]

BILLING CODE 6560–50–P

ENVIRONMENTAL PROTECTION AGENCY

[FRL–8921–1]

Notice of a Project Waiver of Section 1605 (Buy American Requirement) of the American Recovery and Reinvestment Act of 2009 (ARRA) to the Auburn, ME Sewerage District

AGENCY: Environmental Protection Agency (EPA).

ACTION: Notice.

SUMMARY: The EPA is hereby granting a project waiver of the Buy American requirements of ARRA Section 1605 under the authority of Section 1605(b)(2) [manufactured goods are not produced in the United States in sufficient and reasonably available quantities and of a satisfactory quality] to the Auburn, Maine Sewerage District for the purchase of specialized ductile iron spring loaded hinged 24″ diameter sanitary manhole covers and frames (*i.e.,* ''REXUS #62114 24S or equal''). These manhole covers and frames are manufactured outside of the United States by Saint-Gobain, a company based in France, and meet the District's technical specifications, which have been in use for at least the past five years. The Acting Regional Administrator is making this determination based on the review and recommendations of the Municipal Assistance Unit. The Auburn, Maine Sewerage District has provided sufficient documentation to support its request. The Assistant Administrator of the Office of Administration and Resources Management has concurred on this decision to make an exception to Section 1605 of ARRA. This action permits the purchase of specific ductile iron manhole covers and frames for the proposed project being implemented by the Auburn, Maine Sewerage District.

DATES: *Effective Date:* May 13, 2009.

FOR FURTHER INFORMATION CONTACT: Katie Connors, Environmental Engineer, (617) 918–1658, or David Chin, Environmental Engineer, (617) 918–1764, Municipal Assistance Unit (CMU), Office of Ecosystem Protection (OEP), U.S. EPA, One Congress Street, CMU, Boston, MA 02114.

SUPPLEMENTARY INFORMATION:

In accordance with ARRA Section 1605(c) and pursuant to Section 1605(b)(2) of Public Law 111–5, Buy American requirements, EPA hereby provides notice that it is granting a project waiver to the Auburn, Maine Sewerage District for the acquisition of specialized ductile iron spring loaded hinged 24″ diameter sanitary manhole covers and frames (*i.e.,* ''REXUS #62114 24S or equal'') manufactured outside of the United States by Saint-Gobain, a company based in France.

Section 1605 of the ARRA requires that none of the appropriated funds may be used for the construction, alteration, maintenance, or repair of a public building or public work unless all of the iron, steel, and manufactured goods used in the project are produced in the United States unless a waiver is provided to the recipient by EPA. A waiver may be provided if EPA determines that (1) applying these requirements would be inconsistent with public interest; (2) iron, steel, and the relevant manufactured goods are not produced in the United States in sufficient and reasonably available quantities and of a satisfactory quality; or (3) inclusion of iron, steel, and the relevant manufactured goods produced in the United States will increase the cost of the overall project by more than 25 percent.

The Auburn, Maine Sewerage District has stated that for at least the past five years it has standardized its manhole cover procurement on ductile iron covers and integrated frames. The District has utilized specialized 24″ diameter spring loaded hinged ductile iron sanitary manhole covers and frames (*i.e.,* ''REXUS #62114 24S or equal'') within its collection system. The reasons for the District's standard include:

(1) The product is more durable in a colder climate than comparable cast iron products; and (2) a spring loaded hinged and locking cover is much more secure and safer (*e.g.* the cover will not flip off when hit by a larger vehicle and will automatically lock in the vertical position to avoid inadvertent closure).

The District's submission clearly articulates entirely functional reasons for its technical specifications, and has

provided sufficient documentation that the relevant manufactured goods are not produced in the United States in sufficient and reasonably available quantity and of a satisfactory quality to meet its technical specifications.

The April 28, 2009 EPA HQ Memorandum, ''Implementation of Buy American provisions of Public Law 111–5, the 'American Recovery and Reinvestment Act of 2009' '', defines *reasonably available quantity* as ''the quantity of iron, steel, or relevant manufactured good is available or will be available at the time needed and place needed, and in the proper form or specification as specified in the project plans and design''. Based on conversations with the District, the technical design specifications for the manhole cover and frame were provided separately to all of the interested contractors prior to bid to ensure that materials would meet the District's standard specifications.

The District has provided information to the EPA representing that there are currently no ductile iron manhole frames and covers manufactured in the United States that have the exact same product specifications in place. The District has also provided certification from its supplier representing that there are no other ductile iron manhole covers and frames from a domestic manufacturer to meet the District's exact specifications.

Based on additional research (*i.e.* Internet product literature search and follow-up telephone calls) conducted by the Municipal Assistance Unit and to the best of the Region's knowledge at the time of the review, there do not appear to be other manhole covers and frames available to meet the District's exact technical specifications. There is one domestic manufacturer that has a product that appears to have most of the same attributes (*e.g.* ductile iron cover and frame, hinged cover, and a locking capability). However, based on information provided to the EPA at the time of the review, it did not have the spring loaded feature for its 24″ diameter manhole cover.

Furthermore, the purpose of the ARRA is to stimulate economic recovery in part by funding current infrastructure construction, not to delay projects that are ''shovel ready'' by requiring utilities, such as the Auburn, Maine Sewerage District, to revise their standards and specifications and to start the bidding process again. The imposition of ARRA Buy American requirements on such projects otherwise eligible for State Revolving Fund assistance would result in unreasonable delay and thus displace the ''shovel ready'' status for this project. To further delay construction is in direct conflict with a fundamental economic purpose of the ARRA, which is to create or retain jobs.

The Municipal Assistance Unit (CMU) has reviewed this waiver request and has determined that the supporting documentation provided by the Auburn, Maine Sewerage District is sufficient to meet the criteria listed under Section 1605(b) and in the April 28, 2009, ''Implementation of Buy American provisions of Public Law 111–5, the 'American Recovery and Reinvestment Act of 2009' Memorandum'': Iron, steel, and the manufactured goods are not produced in the United States in sufficient and reasonably available quantities and of a satisfactory quality.

The basis for this project waiver is the authorization provided in Section 1605(b)(2). Due to the lack of production of this product in the United States in sufficient and reasonably available quantities and of a satisfactory quality in order to meet the District's technical specifications, a waiver from the Buy American requirement is justified.

The March 31, 2009 Delegation of Authority Memorandum provided Regional Administrators with the authority to issue exceptions to Section 1605 of ARRA within the geographic boundaries of their respective regions and with respect to requests by individual grant recipients. Having established both a proper basis to specify the particular good required for this project, and that this manufactured good was not available from a producer in the United States, the Auburn, Maine Sewerage District is hereby granted a waiver from the Buy American requirements of Section 1605(a) of Public Law 111–5 for the purchase of ductile iron manhole covers and frames using ARRA funds as specified in the District's request of April 6, 2009. This supplementary information constitutes the detailed written justification required by Section 1605(c) for waivers ''based on a finding under subsection (b).''

Authority: Public Law 111–5, Section 1605.

June 8, 2009.

Ira W. Leighton,

Acting Regional Administrator, Region I, New England.

[FR Doc. E9–14600 Filed 6–19–09; 8:45 am]

BILLING CODE 6560–50–P

EXPORT-IMPORT BANK OF THE U.S.

[Public Notice 119]

Agency Information Collection Activities: Final Collection; Comment Request

AGENCY: Export-Import Bank of the U.S.

ACTION: Submission for OMB review and comments request.

Form Title: Payment Default Report (EIB 09–01).

SUMMARY: The Export-Import Bank of the United States (Ex-Im Bank), as a part of its continuing effort to reduce paperwork and respondent burden, invites the general public and other Federal Agencies to comment on the proposed information collection, as required by the Paperwork Reduction Act of 1995.

This collection allows insured/guaranteed parties and insurance brokers to report overdue payments from the borrower and/or guarantor. Ex-Im Bank customers will submit this form electronically through Ex-Im Online, replacing paper reporting. Ex-Im Bank has simplified reporting of payment defaults in this form by including checkboxes and providing for many fields to be self-populated. Ex-Im Bank provides insurance, loads, and guarantees for the financing of exports of goods and services.

DATES: Comments should be received on or before July 22, 2009 to be assured of consideration.

ADDRESSES: Direct all comments to Office of Management and Budget, Office of Information and Regulatory Affairs, 725 17th Street, NW., Washington, DC 20038.

SUPPLEMENTARY INFORMATION:

Titles and Form Number: EIB 09–01 Payment Default Report.

OMB Number: None.

Type of Review: Regular.

Need and Use: The information requested enables insured/guaranteed parties and insurance brokers to report overdue payments from the borrower and/or guarantor.

Affected Public: Insured/guaranteed parties and brokers.

Annual Number of Respondents: 200.

Estimated Time per Respondent: 15 minutes.

Government Annual Burden Hours: 16.67.

Sharon A. Whitt,

Agency Clearance Officer.

[FR Doc. E9–14529 Filed 6–19–09; 8:45 am]

BILLING CODE 6690–01–M

FEDERAL COMMUNICATIONS COMMISSION

[MB Docket Nos. 07–294; 06–121; 02–277; 04–228; MM Docket Nos. 01–235; 01–317; 00–244; DA 09–1221]

Promoting Diversification of Ownership in the Broadcasting Services

AGENCY: Federal Communications Commission.

ACTION: Notice.

SUMMARY: The Media Bureau Order suspends the biennial filing requirement for the existing Form 323 for licensees who would otherwise be required to file their biennial ownership report between May 29, 2009 and November 1, 2009. There are three filing dates between May 29, 2009 and November 1, 2009: June 1, August 1, and October 1.

FOR FURTHER INFORMATION CONTACT: Mania Baghdadi, (202) 418–2330; Amy Brett (202) 418–2330.

SUPPLEMENTARY INFORMATION: On May 5, 2009, the Commission released a *Report and Order and Fourth Further Notice of Proposed Rulemaking* in its Diversification of Ownership proceeding (''Order''). In pertinent part, the Order revised certain requirements for filing FCC Form 323, which provides ownership information about broadcast facilities. The Order enlarged the class of broadcast licensees required to file FCC Form 323 biennially, and it substituted a uniform biennial filing deadline for the current system of rolling filing deadlines that are tied to a station's renewal anniversary. Pursuant to these new requirements, all commercial full power AM, FM, and TV stations; LPTV and Class A stations; and entities with attributable or reportable interests in them, are required to file the revised FCC Form 323 on or before November 1, 2009, with information current as of October 1, 2009, and to file biennially thereafter. For purposes of the biennial filing requirement, the Order provided that certain nonattributable interests would be reportable: (1) Minority voting stock interests in a corporation with a single majority shareholder, and (2) interests in an eligible entity that would otherwise be attributable under the Equity/Debt Plus attribution rule.

On its own motion, the Commission's Media Bureau is suspending the filing requirement for the existing Form 323 for licensees that would otherwise be required to file from May 29, 2009, the date the Media Bureau Order was released, through November 1, 2009. The Media Bureau believes that it is in the public interest to relieve filers from the burden of filing the existing Form 323 within the six months prior to the new November 1 filing requirement. On balance, the burden of requiring licensees and other entities to file twice within a six-month period outweighs the benefit of receiving the ownership information. In addition, a suspension of the filing requirement will not impair the ability to assess the state of minority or female ownership. In the event that the OMB approval for the new Form 323 has not been received by the November 1, 2009 filing deadline, all filers who would have been required to file Form 323 between May 29, 2009 and November 1, 2009, will be required to file the existing Form 323 by November 1, 2009.

Accordingly, it is ordered, that pursuant to authority under sections 4(i) and 303(r) of the Communications Act of 1934, as amended, 47 U.S.C. 154 and 303(r) and pursuant to authority delegated to the Media Bureau pursuant to §§ 0.204 and 0.283 of the Commission's rules, 47 CFR 0.204 and 0.283, a suspension of the filing requirements as described in the Media Bureau Order is granted, sua sponte.

Federal Communications Commission.

Robert H. Ratcliffe,

Acting Chief, Media Bureau.

[FR Doc. E9–14597 Filed 6–19–09; 8:45 am]

BILLING CODE 6712–01–P

FEDERAL ELECTION COMMISSION

Sunshine Act Notices

AGENCY: Federal Election Commission.

DATE AND TIME: Wednesday, June 24, 2009, 11 a.m.

PLACE: 999 E Street, NW., Washington, DC (Ninth Floor).

STATUS: This meeting will be closed to the public.

Items To Be Discussed

Compliance matters pursuant to 2 U.S.C. 437g;

Audits conducted pursuant to 2 U.S.C. 437g, § 438(b), and Title 26, U.S.C.;

Matters concerning participation in civil actions or proceedings or arbitration; and

Internal personnel rules and procedures or matters affecting a particular employee.

* * * * *

DATE AND TIME: Thursday, June 25, 2009, at 10 a.m.

PLACE: 999 E Street, NW., Washington, DC (Ninth Floor).

STATUS: This meeting will be open to the public.

Items To Be Discussed

Correction and Approval of Minutes;

Draft Advisory Opinion 2009–07: Representative Randy Neugebauer, by Benjamin L. Ginsberg, and Kathryn Biber Chen;

Draft Advisory Opinion 2009–12: Senator Norm Coleman, by Benjamin Ginsberg, William McGinley, and Kathryn Biber Chen; and

Final Rule on Civil Penalty Inflation Adjustments. Management and Administrative Matters.

Individuals who plan to attend and require special assistance, such as sign language interpretation or other reasonable accommodations, should contact Mary Dove, Commission Secretary, at (202) 694–1040, at least 72 hours prior to the hearing date.

PERSON TO CONTACT FOR INFORMATION: Judith Ingram, Press Officer Telephone: (202) 694–1220.

Mary W. Dove,

Secretary of the Commission.

[FR Doc. E9–14640 Filed 6–18–09; 4:15 pm]

BILLING CODE 6715–01–M

FEDERAL RESERVE SYSTEM

Change in Bank Control Notices; Acquisition of Shares of Bank or Bank Holding Companies

The notificants listed below have applied under the Change in Bank Control Act (12 U.S.C. 1817(j)) and § 225.41 of the Board's Regulation Y (12 CFR 225.41) to acquire a bank or bank holding company. The factors that are considered in acting on the notices are set forth in paragraph 7 of the Act (12 U.S.C. 1817(j)(7)).

The notices are available for immediate inspection at the Federal Reserve Bank indicated. The notices also will be available for inspection at the office of the Board of Governors. Interested persons may express their views in writing to the Reserve Bank indicated for that notice or to the offices of the Board of Governors. Comments must be received not later than July 7, 2009.

A. Federal Reserve Bank of Kansas City (Todd Offenbacker, Assistant Vice President) 1 Memorial Drive, Kansas City, Missouri 64198–0001:

1. B. Dirk Bagenstos and Lesley D. Bagenstos, both of Cherokee, Oklahoma; to acquire voting shares of First Keyes Bancshares, Inc., and thereby indirectly acquire voting shares of The First State Bank, both of Keyes, Oklahoma.

Board of Governors of the Federal Reserve System, June 17, 2009.

Jennifer J. Johnson,

Secretary of the Board.

[FR Doc. E9–14582 Filed 6–19–09; 8:45 am]

BILLING CODE 6210–01–S

FEDERAL RESERVE SYSTEM

Consumer Advisory Council; Solicitation of Nominations for Membership

AGENCY: Board of Governors of the Federal Reserve System.

ACTION: Notice.

SUMMARY: The Board is inviting the public to nominate qualified individuals for appointment to its Consumer Advisory Council, whose membership represents interests of consumers, communities, and the financial services industry. New members will be selected for three-year terms that begin in January 2010. The Board expects to announce the selection of new members in early January.

DATES: Nominations must be received by August 28, 2009. Nominations not received by August 28 may not be considered.

ADDRESSES: Nominations must include a résumé for each nominee. Electronic nominations are preferred. The appropriate form can be accessed at: *https://www.federalreserve.gov/secure/forms/cacnominationform.cfm*.

If electronic submission is not feasible, the nominations can be mailed (not sent by facsimile) to Joseph Firschein, Assistant Director and Community Affairs Officer, Division of Consumer and Community Affairs, Board of Governors of the Federal Reserve System, Washington, DC 20551.

FOR FURTHER INFORMATION CONTACT: Jennifer Kerslake, Secretary of the Council, Division of Consumer and Community Affairs, (202) 452–6470, Board of Governors of the Federal Reserve System, Washington, DC 20551.

SUPPLEMENTARY INFORMATION: The Consumer Advisory Council was established in 1976 at the direction of the Congress to advise the Federal Reserve Board on the exercise of its duties under the Consumer Credit Protection Act and on other consumer-related matters. The Council by law represents the interests both of consumers and of the financial services industry (15 U.S.C. 1691(b)). Under the Rules of Organization and Procedure of the Consumer Advisory Council (12 CFR 267.3), members serve three-year terms that are staggered to provide the Council with continuity.

New members will be selected for terms beginning January 1, 2010, to replace members whose terms expire in December 2009. The Board expects to announce its appointment of new members in early January.

Nomination letters should include:

- A résumé for each nominee;
- nominee's full name, organizational affiliation, title, address, phone and fax numbers, and email address;
- nominee organization's name, brief description of organization, address, and phone and fax numbers;
- information about past and present positions held by the nominee, dates, and description of responsibilities;
- a description of the nominee's special knowledge, interests, or experience related to community development and reinvestment, consumer protection regulations, consumer credit, or other consumer financial services issues;
- positions held in community organizations and on councils and boards; and
- nominator's full name, organizational affiliation, title, address, phone and fax numbers, and e-mail address.

Individuals may nominate themselves.

The Board is interested in candidates who have familiarity with consumer financial services, community development and reinvestment, and consumer protection regulations, and who are willing to express their views. Candidates do not have to be experts on all levels of consumer financial services or community reinvestment, but they should possess some basic knowledge of the issues. They must be able and willing to make the necessary time commitment to participate in conference calls, and prepare for and attend meetings three times a year (usually for two days, including committee meetings). The meetings are held at the Board's offices in Washington, DC. The Board pays travel expenses, lodging, and a nominal honorarium.

In making the appointments, the Board will seek to complement the background of continuing Council members in terms of affiliation and geographic representation and to ensure the representation of women and minority groups. The Board may consider prior years' nominees and does not limit consideration to individuals nominated by the public when making its selection.

Council members whose terms end as of December 31, 2009, are:

Jason Engel, Vice President and Chief Regulatory Counsel, Experian, Costa Mesa, California.

Joseph L. Falk, Consultant, Akerman Senterfitt, Miami, Florida.

Louise J. Gissendaner, Senior Vice President, Director of Community Development, Fifth Third Bank, Cleveland, Ohio.

Patricia A. Hasson, President, Consumer Credit Counseling Service of Delaware Valley, Inc., Philadelphia, Pennsylvania.

Thomas P. James, Senior Assistant Attorney General, Consumer Counsel, Consumer Fraud Bureau, Office of the Illinois Attorney General, Chicago, Illinois.

Edna Sawady, Economic Inclusion Consultant, New York, New York.

H. Cooke Sunoo, Director, Asian Pacific Islander Small Business Program, Los Angeles, California.

Stergios ''Terry'' Theologides, Executive Vice President, General Counsel, Saxon Mortgage, Irving, Texas.

Linda Tinney, Vice President, Community Development, West Metro Region Manager, U.S. Bank, Denver, Colorado.

Luz L. Urrutia, Chief Executive Officer and President, El Banco de Nuestra Comunidad, Roswell, Georgia.

Council members whose terms continue through 2010 and 2011 are:

Paula Bryant-Ellis, Senior Vice President, Community Development Banking Group, BOK Financial Corporation, Tulsa, Oklahoma.

Michael Calhoun, President, Center for Responsible Lending, Durham, North Carolina.

Alan Cameron, President and Chief Executive Officer, Idaho Credit Union League, Boise, Idaho.

John Carey, Executive Vice President and Chief Administrative Officer, Citi Cards, Long Island City, New York.

Patricia Garcia Duarte, President and Chief Executive Officer, Neighborhood Housing Services of Phoenix, Inc., Phoenix, Arizona.

Kathleen Engel, Associate Professor of Law, Cleveland-Marshall College of Law, Cleveland, Ohio.

Betsy E. Flynn, President and Vice Chairman, Community Financial Services Bank, Benton, Kentucky.

Ira Goldstein, Director, Policy and Information Services, The Reinvestment Fund, North Philadelphia, Pennsylvania.

Greta Harris, Vice President—Southeast Region, Local Initiatives Support Corporation, Richmond, Virginia.

Kirsten Keefe, Senior Staff Attorney, Empire Justice Center, Albany, New York.

Lorenzo Littles, Dallas Director, Enterprise Community Partners, Inc., Dallas, Texas.
Larry Litton, Jr., President and Chief Executive Officer, Litton Loan Servicing, LP, Houston, Texas.
Saurabh Narain, Chief Fund Advisor, National Community Investment Fund, Chicago, Illinois.
Andres Navarrete, Senior Vice President, Chief Counsel—National Lending, Capital One Financial Corporation, McLean, Virginia.
Jim Park, President and Chief Executive Officer, New Vista Asset Management, San Diego, California.
Ronald Phillips, President, Coastal Enterprises, Inc., Wiscasset, Maine.
Kevin Rhein, Division President, Wells Fargo Card Services, Minneapolis, Minnesota.
Shanna Smith, President and Chief Executive Officer, National Fair Housing Alliance, Washington, District of Columbia.
Jennifer Tescher, Director, Center for Financial Services Innovation, Chicago, Illinois.
Mary Tingerthal, President, Capital Markets Companies, Housing Partnership Network, St. Paul, Minnesota.

Board of Governors of the Federal Reserve System, June 17, 2009.

Jennifer J. Johnson,

Secretary of the Board.

[FR Doc. E9–14606 Filed 6–19–09; 8:45 am]

BILLING CODE 6210–01–P

FEDERAL RESERVE SYSTEM

Formations of, Acquisitions by, and Mergers of Bank Holding Companies

The companies listed in this notice have applied to the Board for approval, pursuant to the Bank Holding Company Act of 1956 (12 U.S.C. 1841 *et seq.*) (BHC Act), Regulation Y (12 CFR Part 225), and all other applicable statutes and regulations to become a bank holding company and/or to acquire the assets or the ownership of, control of, or the power to vote shares of a bank or bank holding company and all of the banks and nonbanking companies owned by the bank holding company, including the companies listed below.

The applications listed below, as well as other related filings required by the Board, are available for immediate inspection at the Federal Reserve Bank indicated. The applications also will be available for inspection at the offices of the Board of Governors. Interested persons may express their views in writing on the standards enumerated in the BHC Act (12 U.S.C. 1842(c)). If the proposal also involves the acquisition of a nonbanking company, the review also includes whether the acquisition of the nonbanking company complies with the standards in section 4 of the BHC Act (12 U.S.C. 1843). Unless otherwise noted, nonbanking activities will be conducted throughout the United States. Additional information on all bank holding companies may be obtained from the National Information Center website at *www.ffiec.gov/nic/*.

Unless otherwise noted, comments regarding each of these applications must be received at the Reserve Bank indicated or the offices of the Board of Governors not later than July 17, 2009.

A. Federal Reserve Bank of Chicago (Colette A. Fried, Assistant Vice President) 230 South LaSalle Street, Chicago, Illinois 60690–1414:

1. Prairieland Bancorp Employee Stock Ownership Plan and Trust, Bushnell, Illinois; to acquire additional voting shares, for a total of 44.62 percent of the voting shares, of Prairieland Bancorp, Inc., and thereby indirectly acquire additional voting shares of Merchants and Farmers State Bank of Bushnell, both of Bushnell, Illinois.

Board of Governors of the Federal Reserve System, June 17, 2009.

Jennifer J. Johnson,

Secretary of the Board.

[FR Doc. E9–14583 Filed 6–19–09; 8:45 am]

BILLING CODE 6210–01–S

DEPARTMENT OF HEALTH AND HUMAN SERVICES

Substance Abuse and Mental Health Services Administration

Agency Information Collection Activities: Proposed Collection; Comment Request

In compliance with Section 3506(c)(2)(A) of the Paperwork Reduction Act of 1995 concerning opportunity for public comment on proposed collections of information, the Substance Abuse and Mental Health Services Administration (SAMHSA) will publish periodic summaries of proposed projects. To request more information on the proposed projects or to obtain a copy of the information collection plans, call the SAMHSA Reports Clearance Officer on (240) 276–1243.

Comments are invited on: (a) Whether the proposed collections of information are necessary for the proper performance of the functions of the agency, including whether the information shall have practical utility; (b) the accuracy of the agency's estimate of the burden of the proposed collection of information; (c) ways to enhance the quality, utility, and clarity of the information to be collected; and (d) ways to minimize the burden of the collection of information on respondents, including through the use of automated collection techniques or other forms of information technology.

Proposed Project: Opioid Drugs in Maintenance and Detoxification Treatment of Opioid Dependence—42 CFR Part 8 (OMB No. 0930–0206) and Opioid Treatment Programs (OTPs) Mortality Reporting Form—Revision

42 CFR part 8 establishes a certification program managed by SAMHSA's Center for Substance Abuse Treatment (CSAT). The regulation requires that Opioid Treatment Programs (OTPs) be certified. ''Certification'' is the process by which SAMHSA determines that an OTP is qualified to provide opioid treatment under the Federal opioid treatment standards established by the Secretary of Health and Human Services. To become certified, an OTP must be accredited by a SAMHSA-approved accreditation body. The regulation also provides standards for such services as individualized treatment planning, increased medical supervision, and assessment of patient outcomes. This submission seeks continued approval of the information collection requirements in the regulation and of the forms used in implementing the regulation.

SAMHSA currently has approval for the Application for Certification to Use Opioid Drugs in a Treatment Program Under 42 CFR 8.11 (Form SMA–162); the Application for Approval as Accreditation Body Under 42 CFR 8.3(b) (Form SMA–163); and the Exception Request and Record of Justification Under 42 CFR 8.12 (Form SMA–168), which may be used on a voluntary basis by physicians when there is a patient care situation in which the physician must make a treatment decision that differs from the treatment regimen required by the regulation. Form SMA–168 is a simplified, standardized form to facilitate the documentation, request, and approval process for exceptions.

SAMHSA developed an OTP mortality report form to be utilized by OTPs in response to the increasing methadone associated mortality around the country. This form also assists SAMHSA with regulatory oversight of methadone for use in opioid addiction treatment because it is not clear whether and to what extent the increase in methadone-associated deaths may be related to treatment in OTPs. A system within SAMHSA to gather information

directly relevant to the agency's mission of overseeing and ensuring safe and effective treatment for patients with opioid dependence provides an additional layer of oversight.

SAMHSA currently has approval for the Opioid Treatment Programs (OTPs) Mortality Reporting Form. The data collected from the form is used by SAMHSA to increase understanding of the factors contributing to these deaths, identify preventable causes of deaths, and ultimately, take appropriate action to minimize risk and help improve the quality of care. SAMHSA recently received OMB approval for the voluntary collection of data regarding OTP mortality, which expires October 2011. The consolidation of the OMB packages for the mortality form with the regulatory forms SMA–162, SMA–163, and SMA–168 reduces agency and staff burden.

The tables that follow summarize the annual reporting burden associated with the regulation, including burden associated with the forms.

ESTIMATED ANNUAL REPORTING REQUIREMENT BURDEN FOR ACCREDITATION BODIES

42 CFR citation	Purpose	No. of respondents	Responses/ respondent	Hours/ response	Total hours
8.3(b)(1–11)	Initial approval (SMA–163)	1	1	6.0	6
8.3(c)	Renewal of approval (SMA–163)	2	1	1.0	2
8.3(e)	Relinquishment notification	1	1	0.5	0.5
8.3(f)(2)	Non-renewal notification to accredited OTPs.	1	90	0.1	9
8.4(b)(1)(ii)	Notification to SAMHSA for seriously noncompliant OTPs.	2	2	1.0	4
8.4(b)(1)(iii)	Notification to OTP for serious non-compliance.	2	10	1.0	20
8.4(d)(1)	General documents and information to SAMHSA upon request.	6	5	0.5	15
8.4(d)(2)	Accreditation survey to SAMHSA upon request.	6	75	0.02	9
8.4(d)(3)	List of surveys, surveyors to SAMHSA upon request.	6	6	0.2	7.2
8.4(d)(4)	Report of less than full accreditation to SAMHSA.	6	5	0.5	15
8.4(d)(5)	Summaries of Inspections	6	50	0.5	150
8.4(e)	Notifications of Complaints	12	6	0.5	3.6
8.6(a)(2) and (b)(3)	Revocation notification to Accredited OTPs.	1	185	0.3	55.5
8.6(b)	Submission of 90-day corrective plan to SAMHSA.	1	1	10	10.0
8.6(b)(1)	Notification to accredited OTPs of Probationary Status.	1	185	0.3	55.0
TOTAL		6			361.80

ESTIMATED ANNUAL REPORTING REQUIREMENT BURDEN FOR OPIOID TREATMENT PROGRAMS

42 CFR citation	Purpose	No. of respondents	Responses/ respondent	Hours/ response	Total hours
8.11(b)	Renewal of approval (SMA–162)	386	1	0.15	57.9
8.11(b)	Relocation of Program (SMA–162)	35	1	1.17	40.95
8.11(e)(1)	Application for provisional certification	42	1	1	42.00
8.11(e)(2)	Application for extension of provisional certification.	30	1	0.25	7.50
8.11(f)(5)	Notification of sponsor or medical director change (SMA–162).	60	1	0.1	6.00
8.11(g)(2)	Documentation to SAMHSA for interim maintenance.	1	1	1	1.00
8.11(h)	Request to SAMHSA for Exemption from 8.11 and 8.12 (including SMA–168).	1,200	25	0.7	2135.0
8.11(i)(1)	Notification to SAMHSA Before Establishing Medication Units (SMA–162).	10	1	0.25	2.5
8.12(j)(2)	Notification to State Health Officer When Patient Begins Interim Maintenance.	1	20	0.33	6.6
8.24	Contents of Appellant Request for Review of Suspension.	2	1	0.25	.50
8.25(a)	Informal Review Request	2	1	1.00	2.00
8.26(a)	Appellant's Review File and Written Statement.	2	1	5.00	10.00
8.28(a)	Appellant's Request for Expedited Review	2	1	1.00	2.00
8.28(c)	Appellant Review File and Written Statement.	2	1	5.00	10.00
TOTAL		1,200			2323.95

ESTIMATED ANNUAL REPORTING REQUIREMENT BURDEN FOR OTPS

Form name	Number of facilities (OTPs)	Responses per facility	Burden/ response (hours) to OTP	Annual burden (hours) to OTPs
SAMHSA OTP Mortality Form	1,200	2 per year	0.5	1200.00

ESTIMATED ANNUAL REPORTING REQUIREMENT BURDEN FOR MEDICAL EXAMINER (ME)

Form name	Number of ME follow-ups	Responses per ME	Burden/ response (hours) for ME	Annual burden (hours) for ME
SAMHSA OTP mortality form	230	1 per year	0.1	2.3

SAMHSA believes that the recordkeeping requirements in the regulation are customary and usual practices within the medical and rehabilitative communities and has not calculated a response burden for them. The recordkeeping requirements set forth in 42 CFR 8.4, 8.11 and 8.12 include maintenance of the following: 5-year retention by accreditation bodies of certain records pertaining to accreditation; documentation by an OTP of the following: a patient's medical examination when admitted to treatment, A patient's history, a treatment plan, any prenatal support provided the patient, justification of unusually large initial doses, changes in a patient's dosage schedule, justification of unusually large daily doses, the rationale for decreasing a patient's clinic attendance, and documentation of physiologic dependence.

The rule also includes requirements that OTPs and accreditation organizations disclose information. For example, 42 CFR 8.12(e)(1) requires that a physician explain the facts concerning the use of opioid drug treatment to each patient. This type of disclosure is considered to be consistent with the common medical practice and is not considered an additional burden. Further, the rule requires, under Sec. 8.4(i)(1) that accreditation organizations shall make public their fee structure; this type of disclosure is standard business practice and is not considered a burden.

The information requested from OTPs on mortality report form should be readily available to any OTP that has met accreditation standards. The OTP should not find any need to otherwise analyze or synthesize new data in order to complete this form.

Send comments to Summer King, SAMHSA Reports Clearance Officer, Room 7–1044, One Choke Cherry Road, Rockville, MD 20857 and e-mail her a copy at *summer.king@samhsa.hhs.gov.* Written comments should be received within 60 days of this notice.

Dated: June 15, 2009.

Elaine Parry,

Director, Office of Program Services.

[FR Doc. E9–14554 Filed 6–19–09; 8:45 am]

BILLING CODE 4162–20–P

DEPARTMENT OF HEALTH AND HUMAN SERVICES

Centers for Disease Control and Prevention

[30Day–09–0278]

Agency Forms Undergoing Paperwork Reduction Act Review

The Centers for Disease Control and Prevention (CDC) publishes a list of information collection requests under review by the Office of Management and Budget (OMB) in compliance with the requirement of Section 3506(c)(2)(A) of the Paperwork Reduction Act of 1995. To request a copy of these requests, call the CDC Reports Clearance Officer at (404) 639–5960 or send an e-mail to *omb@cdc.gov.* Send written comments to CDC Desk Officer, Office of Management and Budget, Washington, DC or by fax to (202) 395–6974. Written comments should be received within 30 days of this notice.

Proposed Project

National Hospital Ambulatory Medical Care Survey [OMB No. 0920–0278]—Revision—National Center for Health Statistics (NCHS), Centers for Disease Control and Prevention (CDC).

Background and Brief Description

Section 306 of the Public Health Service (PHS) Act (42 U.S.C. 242k), as amended, authorizes that the Secretary of Health and Human Services (DHHS), acting through NCHS, shall collect statistics on ''utilization of health care'' in the United States. The National Hospital Ambulatory Medical Care Survey (NHAMCS) has been conducted annually since 1992. This revision seeks approval to collect data for an additional three years and to expand the survey to include free-standing ambulatory surgical centers. The purpose of NHAMCS is to meet the needs and demands for statistical information about the provision of ambulatory medical care services in the United States. Ambulatory services are rendered in a wide variety of settings, including physicians' offices and hospital outpatient and emergency departments.

The target universe of NHAMCS is in-person visits made to emergency departments (EDs) and outpatient departments (OPDs) of non-Federal, short-stay hospitals (hospitals with an average length of stay of fewer than 30 days) or those whose specialty is general (medical or surgical) or children's general. In 2009, NHAMCS was expanded to include visits to hospital-based ambulatory surgery centers (ASCs). NCHS seeks OMB approval to expand NHAMCS to include free-standing ASCs in 2010. The objective of this new collection will be to collect data about free-standing ambulatory surgery centers, the patients they serve, and the services they deliver. The intent is for NHAMCS to become the principal source of data on ASC services in the United States. The data to be collected include patient characteristics, diagnoses, surgical and nonsurgical procedures, provider and type of anesthesia, time in and out of surgery and postoperative care, and discharge disposition.

Users of NHAMCS data include, but are not limited to, congressional offices, Federal agencies, State and local governments, schools of public health, colleges and universities, private industry, nonprofit foundations, professional associations, clinicians, researchers, administrators, and health planners. There are no costs to the respondents other than their time. The

total estimated annualized burden hours are 10,832.

ESTIMATED ANNUALIZED BURDEN TABLE

Type of respondent	Form name	No. of respondents	No. of responses per respondent	Average burden per response (in hours)
Hospital Chief Executive Officer	Hospital Induction (NHAMCS–101)	482	1	1
Ancillary Service Executive	Freestanding ASC Induction (NHAMCS–101FS).	200	1	1.5
Ancillary Service Executive	Ambulatory Unit Induction (NHAMCS–101U)	1,779	1	1
Physician/Registered Nurse/Medical Record Clerk.	ED Patient Record form NHAMCS–100 (ED)	225	100	7/60
Physician/Registered Nurse/Medical Record Clerk.	OPD Patient Record form NHAMCS–100 (OPD).	128	200	6/60
Physician/Registered Nurse/Medical Record Clerk.	ASC Patient Record Form NHAMCS–100 (ASC).	208	100	6/60
Medical Record Clerk	Pulling and re-filing Patient Records (ED, OPD, and ASC).	425	133	1/60
Physician/Physician Assistant/Nurse Practitioner/Nurse Midwife.	Cervical Cancer Screening Supplement (CCSS) (NHAMCS–906).	255	1	15/60

Dated: June 15, 2009.

Maryam I. Daneshvar,

Acting Reports Clearance Officer, Office of the Chief Science Officer, Centers for Disease Control and Prevention.

[FR Doc. E9–14553 Filed 6–19–09; 8:45 am]

BILLING CODE 4163–18–P

DEPARTMENT OF HEALTH AND HUMAN SERVICES

Food and Drug Administration

[Docket No. FDA–2009–N–0263]

Agency Information Collection Activities; Proposed Collection; Comment Request; Experimental Study of Presentation of Quantitative Effectiveness Information to Consumers in Direct-to-Consumer Television and Print Advertisements for Prescription Drugs

AGENCY: Food and Drug Administration, HHS.

ACTION: Notice.

SUMMARY: The Food and Drug Administration (FDA) is announcing an opportunity for public comment on the proposed collection of certain information by the agency. Under the Paperwork Reduction Act of 1995 (the PRA), Federal agencies are required to publish notice in the **Federal Register** concerning each proposed collection of information and to allow 60 days for public comment in response to the notice. This notice solicits comments on the Experimental Study of Presentation of Quantitative Effectiveness Information to Consumers in Direct-to-Consumer (DTC) Television and Print Advertisements for Prescription Drugs. This study is designed to communicate quantitative information about product benefits in DTC print and television ads.

DATES: Submit written or electronic comments on the collection of information by [*August 21, 2009*

ADDRESSES: Submit electronic comments on the collection of information to *http://www.regulations.gov*. Submit written comments on the collection of information to the Division of Dockets Management (HFA–305), Food and Drug Administration, 5630 Fishers Lane, rm. 1061, Rockville, MD 20852. All comments should be identified with the docket number found in brackets in the heading of this document.

FOR FURTHER INFORMATION CONTACT: Liz Berbakos, Office of Information Management (HFA–710), Food and Drug Administration, 5600 Fishers Lane, Rockville, MD 20857, 301–796–3792.

SUPPLEMENTARY INFORMATION: Under the PRA (44 U.S.C. 3501–3520), Federal agencies must obtain approval from the Office of Management and Budget (OMB) for each collection of information they conduct or sponsor. ''Collection of information'' is defined in 44 U.S.C. 3502(3) and 5 CFR 1320.3(c) and includes agency requests or requirements that members of the public submit reports, keep records, or provide information to a third party. Section 3506(c)(2)(A) of the PRA (44 U.S.C. 3506(c)(2)(A)) requires Federal agencies to provide a 60-day notice in the **Federal Register** concerning each proposed collection of information before submitting the collection to OMB for approval. To comply with this requirement, FDA is publishing notice of the proposed collection of information set forth in this document.

With respect to the following collection of information, FDA invites comments on these topics: (1) Whether the proposed collection of information is necessary for the proper performance of FDA's functions, including whether the information will have practical utility; (2) the accuracy of FDA's estimate of the burden of the proposed collection of information, including the validity of the methodology and assumptions used; (3) ways to enhance the quality, utility, and clarity of the information to be collected; and (4) ways to minimize the burden of the collection of information on respondents, including through the use of automated collection techniques, when appropriate, and other forms of information technology.

Experimental Study of Presentation of Quantitative Effectiveness Information to Consumers in Direct-to-Consumer (DTC) Television and Print Advertisements for Prescription Drugs—New

The Federal Food, Drug, and Cosmetic Act (the act) requires that manufacturers, packers, and distributors (sponsors) who advertise prescription human and animal drugs, including biological products for humans, disclose in advertisements certain information about the advertised product's uses and risks.[1] By its nature, the presentation of

[1] For prescription drugs and biologics, section 502 of the act requires advertisements to contain ''information in brief summary relating to side effects, contraindications, and effectiveness'' (21 U.S.C. 352(n)).

[2] See Swartz, L., S. Woloshin, W. Black, et al., The Role of Numeracy in Understanding the Benefit of

this information is likely to evoke active trade-offs by consumers, i.e., comparisons with the perceived risks of not taking treatment, and comparisons with the perceived benefits of taking a treatment.[2] FDA has an interest in fostering safe and proper use of prescription drugs, an activity that engages both risks and benefits. Therefore, an examination of ways to improve consumers' understanding of this information is central to this regulatory task.

Under the act, FDA engages in a variety of communication activities to ensure that patients and health care providers have the information they need to make informed decisions about treatment options, including the use of prescription drugs. FDA regulations (21 CFR 201.57) describe the content of required product labeling, and FDA reviewers ensure that labeling contains accurate and complete information about the known risks and benefits of each drug.

FDA regulations require that prescription drug advertisements that make (promotional) claims about a product also include risk information in a ''balanced'' manner (21 CFR 202.1(e)(5)(ii)), both in terms of the content and presentation of the information. This balance applies to both the front, display page of an advertisement, as well as including the brief summary page. However, beyond the ''balance'' requirement there is limited guidance and research to direct or encourage sponsors to present benefit claims that are informative, specific, and reflect clinical effectiveness data.

Research and guidance to sponsors on how to present benefit and efficacy information in prescription drug advertisements is limited. For example, ''benefit claims,'' broadly defined, appearing in advertisements are often presented in general language that does not inform patients of the likelihood of efficacy and are often simply variants of an ''intended use'' statement. One content analysis of DTC advertising by Woloshin and Schwartz (2001)[3] found that information about product benefits and risks is often presented in an unbalanced fashion. The researchers classified the ''promotional techniques'' used in the advertisements. Emotional appeals were observed in 67 percent of the ads while vague and qualitative benefit terminology was found in 87 percent of the ads. Only 9 percent contained data. However, for risk information, half the advertisements used data to describe side-effects, typically with lists of side-effects that generally occurred infrequently. Similarly, a content analysis by Frosch et al. (2007)[4] found that only a small proportion of product-claim ads gave specific information about the population prevalence of the medical condition being advertised. The authors criticize DTC for presenting ''best-case scenarios that can distort and inflate consumers' expectations about what prescription drugs can accomplish'' (Froch et al., 2007, p. 12) without disclosing how many consumers are likely to experience that benefit.

Some research has proposed that providing quantitative information about product efficacy enables consumers to make better choices about potential therapy. One possible format (termed the ''drug facts'' box by its creators) for this information has recently received attention.[5] In these studies, the drug facts box format contained information about the product's efficacy and safety in terms of rate (how many people in the clinical trial experienced a benefit or side effect compared to placebo). As expected, this study showed that consumers who were provided efficacy information used it. Participants receiving efficacy information (without other potentially valuable information about the drug) were more likely to correctly choose the product with the higher efficacy than consumers who saw the brief summary that did not contain this information.

Although these results are intriguing, additional research is necessary to uncover important information about how consumers understand effectiveness information about prescription drug products from DTC advertisements. For example, the research to date does not address whether simply adding efficacy rate information and qualitative summations to a consumer-friendly brief summary would enable consumers to find and report the correct answer, or if the presentation of information in a chart format itself increases comprehension.

Further, these data cannot address the best way in which to convey numerical information; percents were used but another format, such as frequencies, may be more effective at communicating quantitative information. Previous research shows that individuals have great difficulty processing numerical concepts (e.g., Beyth-Marom, 1982; Bowman, 2002; Cohen, Ferrell, and Johnson, 2002).[6] A few studies have attempted to determine what different formats make these concepts least troublesome (e.g., Fagerlin, Wang, and Ubel, 2005; Lipkus, 2007),[7] however, most research into the communication of numerical concepts concentrates on risk information. We are not aware of research looking into the integration of quantitative information about effectiveness or benefits into the body of the advertisement itself. The addition of this information may help consumers make better healthcare decisions, provided they can understand it.

It is also not known if ways of communicating product efficacy work equally well across print and television DTC media. To our knowledge, research on presenting quantitative information in risk communication has been conducted exclusively with static modalities. The ideal format for presenting quantitative information may vary as a function of presentation. The amount of mental processing capacity each individual can devote to understanding a message varies depending on how long individuals have to look at the material and whether the material is self-paced or presented at an uncontrollable speed. As a result, some forms of quantitative information may lend themselves to print, rather than broadcast. This particular understanding is crucial to the risk-benefit tradeoff that patients must make with the consultation of a health care professional in order to achieve the best health outcomes.

The proposed study will examine: (1) Various ways of communicating

Screening Mammography, *Annals of Internal Medicine*, 127(11), 966–72, 1997.

[3] Woloshin, S. and L. Schwartz, Direct to Consumer Advertisements for Prescription Drugs: What Are Americans Being Told, *Lancet*, 358, 1141–46, 2001.

[4] Frosch, D.L., P.M. Krueger, R.C. Hornik, et al., Creating Demand for Prescription Drugs: A Content Analysis of Television Direct-to-Consumer Advertising, *Annals of Family Medicine*, 5(1), 6–13, 2007.

[5] Schwartz, L.M., S. Woloshin, H.G. Welch, The Drug Facts Box: Providing Consumers With Simple Tabular Data on Drug Benefit and Harm, *Medical Decision Making*, 27, 655–692, 2007; Schwartz, L.M., S. Woloshin, H.G. Welch, Communicating Drug Benefits and Harms With a Drug Facts Box: Two Randomized Trials, *Annals of Internal Medicine*, 150, 516–527, 2009; Woloshin, S., L.M. Schwartz, H.G. Welch, The Value of Benefit Data in Direct-to-Consumer Drug Ads, *Health Affairs, Suppl Web Exclusives*, W4–234–245, 2004.

[6] Beyth-Marom, R., How Probable is Probable? A Numerical Translation of Verbal Probability Expressions, *Journal of Forecasting*, 1, 257–269, 1982; Bowman, M.L., The Perfidity of Percentiles, *Archives of Clinical Neuropsychology*, 17, 295–303, 2002; Cohen, D.J., J.M. Ferrell, N. Johnson, What Very Small Numbers Mean, *Journal of Experimental Psychology: General*, 131, 424–442, 2002.

[7] Fagerlin, A., C. Wang, P.A. Ubel, Reducing the Influence of Anecdotal Reasoning on People's Health Care Decisions: Is a Picture Worth a Thousand Statistics? *Medical Decision Making*, 25, 398–405, 2005; Lipkus, I., Numeric, Verbal, and Visual Formats of Conveying Health Risks: Suggested Best Practices and Future Recommendations, *Medical Decision Making*, 27, 697–713, 2007.

quantitative efficacy in DTC print ads and (2) whether the findings translate to DTC television ads.

Design Overview: This study will be conducted in two concurrent parts; one examining quantitative information in DTC print advertisements and the other examining such information in DTC television advertisements. Three factors will be examined: Drug efficacy, visual format, and type of statistic. Drug efficacy (low versus high) is defined by a quantifiable, objective metric that can be conveyed in graphical representations of the drug versus the comparator reference drug (in this case, placebo). ''High'' efficacy is noticeably better than the placebo, whereas ''low'' efficacy is minimally better than the placebo. Visual format is defined as various methods through which efficacy can be visually represented. We have chosen to investigate three different formats: Bar graph, pictograph, and pie chart. Type of statistic is defined as the type of statistical information conveyed: Frequency, relative frequency, or percentage. These factors will be combined in a partially crossed factorial design as follows:

TABLE 1.—TYPE OF VISUAL FORMAT X TYPE OF STATISTIC CONVEYED X EFFICACY LEVEL

		Type of Visual Format			
Type of Statistic	Efficacy Level	None	Pie Chart	Bar Chart	Pictograph
Frequency	High Efficacy	✓	✓	✓	✓
	Low Efficacy	✓	✓	✓	✓
Percentage	High Efficacy	✓	✓	✓	N/A
	Low Efficacy	✓	✓	✓	N/A
Combination Frequency + Percentage	High Efficacy	✓	N/A	N/A	N/A
	Low Efficacy	✓	N/A	N/A	N/A
Relative Frequency	High Efficacy	✓	N/A	N/A	N/A
	Low Efficacy	✓	N/A	N/A	N/A
Relative Frequency + Absolute Rate	High Efficacy	✓	N/A	N/A	N/A
	Low Efficacy	✓	N/A	N/A	N/A
None	N/A	✓	N/A	N/A	N/A

The test product will be for the treatment of high cholesterol and modeled on an actual drug used to treat that condition (such as Lipitor©). The product labeling will be used as the reference for defining the high- and low-efficacy levels and the objective metrics for clinical performances. Because both parts of the study will run concurrently, experimental conditions will be identical in both the print and television portions.

Participants will read or view one ad version. After reading the ad, participants will make a series of judgments about the drug. The mean difference between the low- and high-efficacy condition will serve as the baseline for testing whether this difference varies across various graphical presentations, with the exception of the No Information (control) condition. In other words, our analyses will involve two steps. In step 1, within each format, we will test whether participants were able to distinguish between low- and high-efficacy drugs. In step 2, within each efficacy level, we will test whether participants' estimates of efficacy differ across formats and examine the accuracy of these estimates.

Interviews are expected to last no more than 20 minutes. A total of 4,500 participants will be involved in the 2 parts of the study. This will be a one time (rather than annual) collection of information.

FDA estimates the burden of this collection of information as follows:

The total respondent sample for this data collection is 4,500 (2,225 in each part). We estimate the response burden to be 20 minutes, for a burden of 1,485 hours.

The response burden chart is listed in table 2 of this document.

TABLE 2.—ESTIMATED ANNUAL REPORTING BURDEN[1]

21 CFR Section	No. of Respondents	Annual Frequency per Response	Total Annual Responses	Hours per Response	Total Hours
	4,500	1	4,500	.33	1,485
Total	4,500	1	4,500	.33	1,485

[1]There are no capital costs or operating and maintenance costs associated with this collection of information.

Dated: June 15, 2009.

Jeffrey Shuren,

Associate Commissioner for Policy and Planning.

[FR Doc. E9–14501 Filed 6–19–09; 8:45 am]

BILLING CODE 4160–01–S

DEPARTMENT OF HEALTH AND HUMAN SERVICES

Administration for Children and Families

Submission for OMB Review; Comment Request

Title: Cross-Site Evaluation of the Infant Adoption Awareness Training Program for Projects Initially Funded in Fiscal Year 2006–NEW.

OMB No.: New Collection.

Description: The Administration for Children and Families (ACF), Childrens Bureau (CB), will conduct the Cross-Site Evaluation of the Infant Adoption Awareness Training Program (IAATP). Title XII, subtitle A, of the Childrens Health Act of 2000 (CHA) authorizes the Department of Health and Human Services to make Infant Adoption Awareness Training grants available to national, regional, and local adoption organizations for the purposes of developing and implementing programs that train the staff of public and non-profit private health service organizations to provide adoption information and referrals to pregnant women on an equal basis with all other courses of action included in non-directive counseling of pregnant women. Participants in the training include individuals who provide pregnancy or adoption information and those who will provide such services after receiving the training, with Title X (relating to voluntary family planning projects), section 330 (relating to community health centers, migrant health centers, and centers serving homeless individuals and residents of public housing), and CHA-funded school-based health centers, receiving priority to receive the training. A total of six organizations were awarded IAATP funding in 2006.

Section 1201(a)(2)(A) of the IAATP legislation requires grantees to develop and deliver trainings that are consistent with the Best Practice Guidelines for Infant Adoption Awareness Training. The IAATP guidelines address training goals, basic skills, curriculum and training structure. A complete description of the guidelines is available at *http://www.acf.hhs.gov/programs/cb/programs_fund/discretionary/iaatp.htm.*

In addition, grantees are required to conduct local evaluation of program outcomes and participate in the national evaluation of the extent to which IAATP training objectives are met. The Infant Adoption Awareness Training Program: Trainee Survey is the primary data collection instrument for the national cross-site evaluation. Respondents will complete the survey prior to receiving training and approximately 90 days after the training to assess the extent to which trainees demonstrate sustained gains in their knowledge about adoption, and to determine the impact of the training on their subsequent work with pregnant women.

1. Do health care workers who participate in the IAATP training: Demonstrate enhanced knowledge, attitudes, skills, and behaviors with respect to adoption counseling following completion of the program? Provide adoption information to pregnant women on an equal basis with other pregnancy planning options? Demonstrate enhanced awareness of community adoption-related resources and refer expectant mothers to them as needed?

2. Are trainees more confident about discussing all three pregnancy planning options (parenting, abortion, and adoption) in a non-directive counseling style than they were prior to participating in the training? Cross-site evaluation data will be collected on an annual basis throughout the five-year funding period. Pre-test and follow-up versions of the survey are expected to require approximately 10 to 15 minutes to complete. Estimated response time for the follow-up survey includes time for respondents to access the Web-based survey, complete the survey online, and electronically submit the survey. Respondents will not need to implement a recordkeeping system or compile source data in order to complete the survey. Where possible, fields in the follow-up version of the survey will be pre-filled with static data from the respondents pre-test (*e.g.,* demographics, agency type) in order to further expedite completion of the survey and minimize respondent burden.

Respondents: Infant Adoption Awareness Program Trainees.

ANNUAL BURDEN ESTIMATES

Instrument	Number of respondents	Number of responses per respondent	Average burden hours per response	Total burden hours
IAATP: Trainee Survey Pre-Test Administration	1,200	1	0.15	180
IAATP: Trainee Survey Follow-Up Administration	1,200	1	0.10	120

Estimated Total Annual Burden Hours: 300.

Additional Information

Copies of the proposed collection may be obtained by writing to the Administration for Children and Families, Office of Administration, Office of Information Services, 370 L'Enfant Promenade, SW., Washington, DC 20447, Attn: ACF Reports Clearance Officer. All requests should be identified by the title of the information collection. E-mail address: *infocollection@acf.hhs.gov.*

OMB Comment

OMB is required to make a decision concerning the collection of information between 30 and 60 days after publication of this document in the **Federal Register**. Therefore, a comment is best assured of having its full effect if OMB receives it within 30 days of publication. Written comments and recommendations for the proposed information collection should be sent directly to the following:

Office of Management and Budget, Paperwork Reduction Project, Fax: 202–395–6974, Attn: Desk Officer for the Administration for Children and Families.

Dated: October 1, 2008.

Janean Chambers,

Reports Clearance Officer.

Editorial Note: This document was received in the Office of the **Federal Register** on June 17, 2009.

[FR Doc. E9–14543 Filed 6–19–09; 8:45 am]

BILLING CODE 4184–01–P

DEPARTMENT OF HEALTH AND HUMAN SERVICES

Substance Abuse and Mental Health Services Administration

Agency Information Collection Activities: Submission for OMB Review; Comment Request

Periodically, the Substance Abuse and Mental Health Services Administration (SAMHSA) will publish a summary of information collection requests under OMB review, in compliance with the Paperwork Reduction Act (44 U.S.C. Chapter 35). To request a copy of these documents, call the SAMHSA Reports Clearance Officer on (240) 276–1243.

Proposed Project: Rapid HIV Testing Clinical Information Form for the Minority AIDS Initiative (MAI) for Ethnic and Racial Minorities at Risk for Substance Use and HIV/AIDS—Reinstatement

The Substance Abuse and Mental Health Services Administration's (SAMHSA) Center for Substance Abuse Treatment (CSAT), is requesting an OMB review and approval of the Minority AIDS Initiative (MAI) Rapid HIV Testing Clinical Information Form that will be utilized for ethnic and racial minority groups at risk for substance use and HIV/AIDS that are served by CSAT's TCE–HIV grantees. The MAI Rapid HIV Testing Clinical Information Form would allow SAMHSA/CSAT to collect essential clinical information that will be used for quality assurance, quality performance, and product monitoring on approximately 30,000 rapid HIV test kits to be provided to ethnic and racial minority communities at no cost to the recipient provider organizations. The MAI Rapid HIV Testing Clinical Information Form would support quality of care, provide adequate clinical and product monitoring, and provide appropriate safeguards against fraud, waste and abuse of Federal funds. SAMHSA's approach would avoid unnecessary delay in informing any person potentially adversely affected by a test kit recall or public health advisory. This program is authorized under section 509 of the Public Health Service (PHS) Act [42 U.S.C. 290bb–2].

The goals of SAMHSA's MAI initiative are to: (1) Increase the access by racial and ethnic minority communities to HIV testing, prevention, care, and treatment services; (2) implement strategies and activities specifically targeted to the highest risk and hardest-to-serve populations; (3) reduce the stigma associated with HIV/AIDS screening through outreach and education, and (4) establish collaborations or opportunities for programs and/or activities to be integrated.

The target populations for the initiative are African Americans, Hispanic/Latinos, and other racial and ethnic minorities that are disproportionately impacted by the twin epidemics of HIV/AIDS and substance abuse. Since 1981 approximately 1.7 million people are estimated to have been infected with HIV in the U.S., and more than 1.1 million are estimated to be living with HIV/AIDS today. Racial and ethnic minorities have been disproportionately affected by HIV/AIDS, and represent the majority of new AIDS cases (70%), new HIV infections (54%), prevalent HIV/AIDS cases (65%), and AIDS deaths (72%) (CDC, 2006). African Americans have been especially affected by HIV/AIDS. More than half of all new HIV infections and half of new AIDS diagnoses occur in African Americans despite their accounting for approximately 12% of the U.S. population. A similar impact exists among Latinos, who represent 14% of the U.S. population but account for 20% of estimated AIDS diagnoses. Together, Asian/Pacific Islanders and American Indian/Alaska Natives represent 1%–2% of new AIDS diagnoses.

The spread of HIV disease in the United States has been partly fueled by the use of illicit drugs. Injection drug use (IDU) is directly related to HIV transmission through the sharing of drug equipment. According to CDC's latest report on 2006 rates, IDUs accounted for 12 percent of estimated new HIV infections. CDC's historical trend analysis indicates that new infections have declined dramatically in this population over time and confirm the substantial evidence to date of success in reducing HIV infections among IDUs. Despite these declines, rates of HIV and AIDS continue to rise among certain groups including men who have sex with men, high risk heterosexual women and ethnic and racial minority groups due to non-IDU drugs and alcohol that interfere with judgment about sexual and other types of behaviors.

The estimated hour burden is presented in the following table:

Form	Number of respondents	Responses/ respondent	Hours/ response	Total hour burden	Hourly wage cost ($)	Total hour cost $)
MAI Rapid HIV Testing Clinical Information Form (at Entry)	20,000	1	.133	2,660	30.00	79,800
MAI Rapid HIV Testing Clinical Information Form (second test)	4,000	1	.133	532	30.00	15,960
Total	20,000			3,192		95,760

Written comments and recommendations concerning the proposed information collection should be sent by July 22, 2009 to: SAMHSA Desk Officer, Human Resources and Housing Branch, Office of Management and Budget, New Executive Office Building, Room 10235, Washington, DC 20503; due to potential delays in OMB's receipt and processing of mail sent through the U.S. Postal Service, respondents are encouraged to submit comments by fax to: 202–395–6974.

Dated: June 15, 2009.

Elaine Parry,

Director, Office of Program Services.

[FR Doc. E9–14556 Filed 6–19–09; 8:45 am]

BILLING CODE 4162–20–P

DEPARTMENT OF HEALTH AND HUMAN SERVICES

National Institutes of Health

Eunice Kennedy Shriver National Institute of Child Health & Human Development; Notice of Closed Meeting

Pursuant to section 10(d) of the Federal Advisory Committee Act, as amended (5 U.S.C. App.), notice is hereby given of the following meeting.

The meeting will be closed to the public in accordance with the provisions set forth in sections 552b(c)(4) and 552b(c)(6), Title 5 U.S.C., as amended. The grant applications and the discussions could disclose confidential trade secrets or commercial property such as patentable material, and personal information concerning individuals associated with the grant applications, the disclosure of which would constitute a clearly unwarranted invasion of personal privacy.

Name of Committee: National Institute of Child Health and Human Development Special Emphasis Panel. Attention Trajectories from 5 to 7 Years.

Date: June 25, 2009.

Time: 2 p.m. to 3 p.m.

Agenda: To review and evaluate grant applications.

Place: National Institutes of Health, 6100 Executive Boulevard Room 5B01, Rockville, MD 20852. (Telephone Conference Call).

Contact Person: Carla T. Walls, PhD, Scientific Review Administrator, Division of Scientific Review, National Institute of Child Health and Human Development, NIH, 6100 Executive Blvd., Room 5B01, Bethesda, MD 20892. (301) 435–6898. *wallsc@mail.nih.gov.*

This notice is being published less than 15 days prior to the meeting due to the timing limitations imposed by the review and funding cycle.

(Catalogue of Federal Domestic Assistance Program Nos. 93.864, Population Research; 93.865, Research for Mothers and Children; 93.929, Center for Medical Rehabilitation Research; 93.209, Contraception and Infertility Loan Repayment Program, National Institutes of Health, HHS)

Dated: June 12, 2009.

Jennifer Spaeth,

Director, Office of Federal Advisory Committee Policy.

[FR Doc. E9–14497 Filed 6–19–09; 8:45 am]

BILLING CODE 4140–01–M

DEPARTMENT OF HEALTH AND HUMAN SERVICES

National Institutes of Health

Center for Scientific Review; Notice of Closed Meetings

Pursuant to section 10(d) of the Federal Advisory Committee Act, as amended (5 U.S.C. App.), notice is hereby given of the following meetings.

The meetings will be closed to the public in accordance with the provisions set forth in sections 552b(c)(4) and 552b(c)(6), Title 5 U.S.C., as amended. The grant applications and the discussions could disclose confidential trade secrets or commercial property such as patentable material, and personal information concerning individuals associated with the grant applications, the disclosure of which would constitute a clearly unwarranted invasion of personal privacy.

Name of Committee: Center for Scientific Review Special Emphasis Panel; Diabetes, Obesity and Endocrine Disorders.

Date: July 7–8, 2009.

Time: 8 a.m. to 5 p.m.

Agenda: To review and evaluate grant applications.

Place: National Institutes of Health, 6701 Rockledge Drive, Bethesda, MD 20892, (Virtual Meeting).

Contact Person: Nancy Sheard, SCD, Scientific Review Officer, Center for Scientific Review, National Institutes of Health, 6701 Rockledge Drive, Room 6046–E, MSC 7892, Bethesda, MD 20892, 301–435–1154, *sheardn@csr.nih.gov.*

This notice is being published less than 15 days prior to the meeting due to the timing limitations imposed by the review and funding cycle.

Name of Committee: Center for Scientific Review Special Emphasis Panel; Tumor Immunology and Genetic Pathways in Cancer.

Date: July 9, 2009.

Time: 10 a.m. to 12 p.m.

Agenda: To review and evaluate grant applications.

Place: National Institutes of Health, 6701 Rockledge Drive, Bethesda, MD 20892, (Telephone Conference Call).

Contact Person: Malaya Chatterjee, PhD, Scientific Review Officer, Center for Scientific Review, National Institutes of Health, 6701 Rockledge Drive, Room 6192, MSC 7804, Bethesda, MD 20892, 301–451–0131, *chatterm@csr.nih.gov.*

Name of Committee: Center for Scientific Review Special Emphasis Panel; Gametes, Stem Cells, and Regeneration.

Date: July 13, 2009.

Time: 11 a.m. to 1:30 p.m.

Agenda: To review and evaluate grant applications.

Place: National Institutes of Health, 6701 Rockledge Drive, Bethesda, MD 20892, (Telephone Conference Call).

Contact Person: Cathy Wedeen, PhD, Scientific Review Officer, Center for Scientific Review, National Institutes of Health, 6701 Rockledge Drive, Room 3213, MSC 7808, Bethesda, MD 20892, 301–435–1191, *wedeenc@csr.nih.gov.*

Name of Committee: Center for Scientific Review Special Emphasis Panel; Special Topics in Aging and Development.

Date: July 16, 2009.

Time: 1 p.m. to 5 p.m.

Agenda: To review and evaluate grant applications.

Place: National Institutes of Health, 6701 Rockledge Drive, Bethesda, MD 20892, (Telephone Conference Call).

Contact Person: John Burch, PhD, Scientific Review Officer, National Institute of Health, Center for Scientific Review, 6701 Rockledge Drive, Room 3213, MSC 7808, Bethesda, MD 20892, 301–435–1019, *burchjb@csr.nih.gov.*

Name of Committee: Center for Scientific Review Special Emphasis Panel; RFA–OD–09–003 Challenge Grant Panel 11.

Date: July 20–21, 2009.

Time: 8 a.m. to 5 p.m.

Agenda: To review and evaluate grant applications.

Place: Palomar Hotel, 2121 P Street, NW., Washington, DC 20037.

Contact Person: Jerry L. Taylor, PhD, Scientific Review Officer, Center for Scientific Review, National Institutes of Health, 6701 Rockledge Drive, Room 5202, MSC 7846, Bethesda, MD 20892, 301–435–1175, *taylorje@csr.nih.gov.*

Name of Committee: Center for Scientific Review Special Emphasis Panel; RFA OD–09–003: Challenge Grants Panel

Date: July 20–21, 2009.

Time: 8 a.m. to 5 p.m.

Agenda: To review and evaluate grant applications.

Place: Mandarin Oriental, 1330 Maryland Avenue, SW., Washington, DC 20024.

Contact Person: Valerie Durrant, PhD, Scientific Review Officer, Center for Scientific Review, National Institutes of Health, 6701 Rockledge Drive, Room 3148, MSC 7770, Bethesda, MD 20892, (301) 435–3554, *durrantv@csr.nih.gov.*

(Catalogue of Federal Domestic Assistance Program Nos. 93.306, Comparative Medicine; 93.333, Clinical Research, 93.306, 93.333, 93.337, 93.393–93.396, 93.837–93.844, 93.846–93.878, 93.892, 93.893, National Institutes of Health, HHS)

Dated: June 15, 2009.

Jennifer Spaeth,

Director, Office of Federal Advisory Committee Policy.

[FR Doc. E9–14504 Filed 6–19–09; 8:45 am]

BILLING CODE 4140–01–P

DEPARTMENT OF HEALTH AND HUMAN SERVICES

National Institutes of Health

National Institute of Mental Health; Notice of Closed Meetings

Pursuant to section 10(d) of the Federal Advisory Committee Act, as amended (5 U.S.C. App.), notice is hereby given of the following meetings.

The meetings will be closed to the public in accordance with the provisions set forth in sections 552b(c)(4) and 552b(c)(6), Title 5 U.S.C., as amended. The grant applications and the discussions could disclose confidential trade secrets or commercial property such as patentable material, and personal information concerning individuals associated with the grant applications, the disclosure of which would constitute a clearly unwarranted invasion of personal privacy.

Name of Committee: National Institute of Mental Health Special Emphasis Panel; New Drug Developments.

Date: July 6–7, 2009.

Time: 8 a.m. to 5 p.m.

Agenda: To review and evaluate grant applications.

Place: Embassy Suites at the Chevy Chase Pavilion, 4300 Military Road, NW., Washington, DC 20015.

Contact Person: Francois Boller, MD, PhD, Scientific Review Officer, Division of Extramural Activities, National Institute of Mental Health, NIH, Neuroscience Center, 6001 Executive Blvd., Room 6142, MSC 9606, Bethesda, MD 20892–9606, 301–443–1513, *bollerf@mail.nih.gov.*

Name of Committee: National Institute of Mental Health Special Emphasis Panel, ARRA: Supporting New Faculty Recruitment To Enhance Research Resources.

Date: July 7, 2009.

Time: 8 a.m. to 5 p.m.

Agenda: To review and evaluate grant applications.

Place: Melrose Hotel, 2430 Pennsylvania Ave., NW., Washington, DC 20037.

Contact Person: David M. Armstrong, PhD, Scientific Review Officer, Division of Extramural Activities, National Institute of Mental Health, NIH, Neuroscience Center/ Room 6138/MSC 9608, 6001 Executive Boulevard, Bethesda, MD 20892–9608, 301–443–3534, *armstrda@mail.nih.gov.*

(Catalogue of Federal Domestic Assistance Program Nos. 93.242, Mental Health Research Grants; 93.281, Scientist Development Award, Scientist Development Award for Clinicians, and Research Scientist Award; 93.282, Mental Health National Research Service Awards for Research Training; 93.701, ARRA Related Biomedical Research and Research Support Awards, National Institutes of Health, HHS)

Dated: June 15, 2009.

Jennifer Spaeth,

Director, Office of Federal Advisory Committee Policy.

[FR Doc. E9–14508 Filed 6–19–09; 8:45 am]

BILLING CODE 4140–01–P

DEPARTMENT OF HEALTH AND HUMAN SERVICES

National Institutes of Health

National Institute of Allergy and Infectious Diseases; Notice of Closed Meetings

Pursuant to section 10(d) of the Federal Advisory Committee Act, as amended (5 U.S.C. App.), notice is hereby given of the following meetings.

The meetings will be closed to the public in accordance with the provisions set forth in sections 552b(c)(4) and 552b(c)(6), Title 5 U.S.C., as amended. The grant applications and the discussions could disclose confidential trade secrets or commercial property such as patentable material, and personal information concerning individuals associated with the grant applications, the disclosure of which would constitute a clearly unwarranted invasion of personal privacy.

Name of Committee: National Institute of Allergy and Infectious Diseases Special Emphasis Panel; ''NIAID/Division of AIDS: Clinical Site and Study Monitoring''.

Date: July 8, 2009.

Time: 8 a.m. to 5 p.m.

Agenda: To review and evaluate contract proposals.

Place: Hilton Washington DC/Rockville Hotel & Executive, 1750 Rockville Pike, Lincoln Room, Rockville, MD 20852.

Contact Person: Clayton C Huntley, PhD, Scientific Review Officer, Scientific Review Program, Division of Extramural Activities, National Institutes of Health/NIAID/DHHS, 6700B Rockledge Drive, MSC 7616, Bethesda, MD 20892–7616, 301–451–2570, *chuntley@niaid.nih.gov.*

Name of Committee: National Institute of Allergy and Infectious Diseases Special Emphasis Panel; R13 Conference Grants.

Date: July 16, 2009.

Time: 1 p.m. to 4 p.m.

Agenda: To review and evaluate grant applications.

Place: National Institutes of Health, 6700B Rockledge Drive, Bethesda, MD 20817 (Telephone Conference Call).

Contact Person: Michelle M Timmerman, PhD, Scientific Review Officer, Scientific Review Program, NIH/NIAID/DHHS, Room 3147, 6700B Rockledge Drive, MSC–7616, Bethesda, MD 20892–7616, 301–451–4573, *timmermanm@niaid.nih.gov.*

(Catalogue of Federal Domestic Assistance Program Nos. 93.855, Allergy, Immunology, and Transplantation Research; 93.856, Microbiology and Infectious Diseases Research, National Institutes of Health, HHS)

Dated: June 11, 2009.

Jennifer Spaeth,

Director, Office of Federal Advisory Committee Policy.

[FR Doc. E9–14514 Filed 6–19–09; 8:45 am]

BILLING CODE 4140–01–P

DEPARTMENT OF HEALTH AND HUMAN SERVICES

National Institutes of Health

National Institute of Mental Health; Notice of Closed Meetings

Pursuant to section 10(d) of the Federal Advisory Committee Act, as amended (5 U.S.C. App.), notice is hereby given of the following meetings.

The meetings will be closed to the public in accordance with the provisions set forth in sections 552b(c)(4) and 552b(c)(6), Title 5 U.S.C., as amended. The grant applications and the discussions could disclose confidential trade secrets or commercial property such as patentable material, and personal information concerning individuals associated with the grant applications, the disclosure of which would constitute a clearly unwarranted invasion of personal privacy.

Name of Committee: National Institute of Mental Health Special Emphasis Panel, New Drug Developments.

Date: July 6–7, 2009.

Time: 8 a.m. to 5 p.m.

Agenda: To review and evaluate grant applications.

Place: Embassy Suites at the Chevy Chase Pavilion, 4300 Military Road, NW., Washington, DC 20015.

Contact Person: Francois Boller, MD, PhD., Scientific Review Officer, Division of Extramural Activities, National Institute of Mental Health, NIH, Neuroscience Center, 6001 Executive Blvd., Room 6142, MSC 9606, Bethesda, MD 20892–9606, 301–443–1513, *bollerf@mail.nih.gov.*

Name of Committee: National Institute of Mental Health Special Emphasis Panel, ARRA: Supporting New Faculty Recruitment to Enhance Research Resources.

Date: July 7, 2009.

Time: 8 a.m. to 5 p.m.

Agenda: To review and evaluate grant applications.

Place: Melrose Hotel, 2430 Pennsylvania Ave., NW., Washington, DC 20037.

Contact Person: David M. Armstrong, Ph.D., Scientific Review Officer, Division of Extramural Activities, National Institute of Mental Health, NIH, Neuroscience Center/ Room 6138/MSC 9608, 6001 Executive Boulevard, Bethesda, MD 20892–9608, 301–443–3534, *armstrda@mail.nih.gov.*

(Catalogue of Federal Domestic Assistance Program Nos. 93.242, Mental Health Research Grants; 93.281, Scientist Development Award, Scientist Development Award for Clinicians, and Research Scientist Award; 93.282, Mental Health National Research Service Awards for Research Training; 93.701, ARRA Related Biomedical Research and Research Support Awards, National Institutes of Health, HHS)

Dated: June 10, 2009.

Jennifer Spaeth,

Director, Office of Federal Advisory Committee Policy.

[FR Doc. E9–14510 Filed 6–19–09; 8:45 am]

BILLING CODE 4140–01–P

DEPARTMENT OF HEALTH AND HUMAN SERVICES

National Institutes of Health

National Institute of Biomedical Imaging and Bioengineering; Notice of Closed Meeting

Pursuant to section 10(d) of the Federal Advisory Committee Act, as amended (5 U.S.C. App.), notice is hereby given of the following meeting.

The meeting will be closed to the public in accordance with the provisions set forth in sections 552b(c)(4) and 552b(c)(6), Title 5 U.S.C., as amended. The grant applications and the discussions could disclose confidential trade secrets or commercial property such as patentable material, and personal information concerning individuals associated with the grant applications, the disclosure of which would constitute a clearly unwarranted invasion of personal privacy.

Name of Committee: National Institute of Biomedical Imaging and Bioengineering Special Emphasis Panel; ARRA NIBIB P30 Enhancing Research Capacity.

Date: July 23, 2009.

Time: 8 p.m. to 5:30 p.m.

Agenda: To review and evaluate grant applications.

Place: Hyatt Regency Bethesda, One Bethesda Metro Center, 7400 Wisconsin Avenue, Bethesda, MD 20814.

Contact Person: Ruixia Zhou, PhD, Scientific Review Officer, 6707 Democracy Boulevard, Democracy Two Building, Suite 957, Bethesda, MD 20892, 301–496–4773, *zhour@mail.nih.gov.*

(Catalogue of Federal Domestic Assistance Program Nos. 93.701, ARRA Related Biomedical Research and Research Support Awards. National Institutes of Health, HHS)

Dated: June 10, 2009.

Jennifer Spaeth,

Director, Office of Federal Advisory Committee Policy.

[FR Doc. E9–14524 Filed 6–19–09; 8:45 am]

BILLING CODE 4140–01–P

DEPARTMENT OF HEALTH AND HUMAN SERVICES

National Institutes of Health

National Cancer Institute; Amended Notice of Meeting

Notice is hereby given of a change in the meeting of the National Cancer Institute Special Emphasis Panel, July 20, 2009, 8 a.m. to July 21, 2009, 8 p.m., Bethesda Marriott, 5151 Pooks Hill Road, Bethesda, MD 20814 which was published in the **Federal Register** on May 18, 2009, 74 FR 23193.

This amendment is to cancel NCI SEP: IRG Subcommittee H—Clinical Cooperative Group. This meeting is being held as a regular Initial Review Group meeting and not a Special Emphasis Panel. Please see FR page 24859. The meeting is closed to the public.

Dated: June 10, 2009.

Jennifer Spaeth,

Director, Office of Federal Advisory Committee Policy.

[FR Doc. E9–14523 Filed 6–19–09; 8:45 am]

BILLING CODE 4140–01–P

DEPARTMENT OF HEALTH AND HUMAN SERVICES

National Institutes of Health

National Cancer Institute; Notice of Closed Meeting

Pursuant to section 10(d) of the Federal Advisory Committee Act, as amended (5 U.S.C. App.), notice is hereby given of the following meeting.

The meeting will be closed to the public in accordance with the provisions set forth in sections 552b(c)(4) and 552b(c)(6), Title 5 U.S.C., as amended. The grant applications and the discussions could disclose confidential trade secrets or commercial property such as patentable material, and personal information concerning individuals associated with the grant applications, the disclosure of which would constitute a clearly unwarranted invasion of personal privacy.

Name of Committee: National Cancer Institute Special Emphasis Panel, P30 Competitive Revisions I.

Date: August 6, 2009.

Time: 8 a.m. to 11:30 a.m.

Agenda: To review and evaluate grant applications.

Place: Hyatt Regency Bethesda, One Bethesda Metro Center, 7400 Wisconsin Avenue, Bethesda, MD 20814.

Contact Person: Gail J. Bryant, Medical Officer, Resources and Training Review Branch, Division of Extramural Activities, National Cancer Institute, National Institutes of Health, 6116 Executive Boulevard, Room 8111, MSC 8328, Bethesda, MD 20852–8328, (301) 402–0801, *gb30t@nih.gov.*

(Catalogue of Federal Domestic Assistance Program Nos. 93.392, Cancer Construction; 93.393, Cancer Cause and Prevention Research; 93.394, Cancer Detection and Diagnosis Research; 93.395, Cancer Treatment Research; 93.396, Cancer Biology Research; 93.397, Cancer Centers Support; 93.398, Cancer Research Manpower; 93.399, Cancer Control; 93.701, ARRA Related Biomedical Research and Research Support Awards, National Institutes of Health, HHS)

Dated: June 10, 2009.

Jennifer Spaeth,

Director, Office of Federal Advisory Committee Policy.

[FR Doc. E9–14521 Filed 6–19–09; 8:45 am]

BILLING CODE 4140–01–P

DEPARTMENT OF HEALTH AND HUMAN SERVICES

National Institutes of Health

National Cancer Institute; Notice of Closed Meeting

Pursuant to section 10(d) of the Federal Advisory Committee Act, as amended (5 U.S.C. App.), notice is hereby given of the following meeting.

The meeting will be closed to the public in accordance with the provisions set forth in sections 552b(c)(4) and 552b(c)(6), Title 5 U.S.C., as amended. The grant applications and the discussions could disclose confidential trade secrets or commercial property such as patentable material, and personal information concerning individuals associated with the grant applications, the disclosure of which would constitute a clearly unwarranted invasion of personal privacy.

Name of Committee: National Cancer Institute Special Emphasis Panel; P30 Competitive Revisions II.

Date: August 6, 2009.

Time: 11:31 a.m. to 3:15 p.m.

Agenda: To review and evaluate grant applications.

Place: Hyatt Regency Bethesda, One Bethesda Metro Center, 7400 Wisconsin Avenue, Bethesda, MD 20814.

Contact Person: Sonya Roberson, PhD, Scientific Review Officer, Resources and Training Review Branch, Division of Extramural Activities, National Cancer Institute, NIH, 6116 Executive Blvd., Room 8109, Bethesda, MD 20892, 301–594–1182, *robersos@mail.nih.gov.*

(Catalogue of Federal Domestic Assistance Program Nos. 93.392, Cancer Construction; 93.393, Cancer Cause and Prevention Research; 93.394, Cancer Detection and Diagnosis Research; 93.395, Cancer Treatment Research; 93.396, Cancer Biology Research; 93.397, Cancer Centers Support; 93.398, Cancer Research Manpower; 93.399,

Cancer Control; 93.701, ARRA Related Biomedical Research and Research Support Awards, National Institutes of Health, HHS)

Dated: June 10, 2009.

Jennifer Spaeth,

Director, Office of Federal Advisory Committee Policy.

[FR Doc. E9–14520 Filed 6–19–09; 8:45 am]

BILLING CODE 4140–01–P

DEPARTMENT OF HEALTH AND HUMAN SERVICES

National Institutes of Health

National Institute of Environmental Health Sciences; Notice of Closed Meeting

Pursuant to section 10(d) of the Federal Advisory Committee Act, as amended (5 U.S.C. App.), notice is hereby given of the following meeting.

The meeting will be closed to the public in accordance with the provisions set forth in sections 552b(c)(4) and 552b(c)(6), Title 5 U.S.C., as amended. The grant applications and the discussions could disclose confidential trade secrets or commercial property such as patentable material, and personal information concerning individuals associated with the grant applications, the disclosure of which would constitute a clearly unwarranted invasion of personal privacy.

Name of Committee: National Institute of Environmental Health Sciences Special Emphasis Panel; Environmental Sensors for Personal Exposure Assessment.

Date: July 9, 2009.

Time: 8:30 a.m. to 6 p.m.

Agenda: To review and evaluate grant applications.

Place: Hilton Garden Inn Southpoint, Hilton Garden Inn Durham Southpoint, 7007 Fayetteville Road, Durham, NC 27713.

Contact Person: RoseAnne M McGee, Associate Scientific Review Officer, Scientific Review Branch, Division of Extramural Research and Training, Nat. Institute of Environmental Health Sciences, P.O. Box 12233, MD EC–30, Research Triangle Park, NC 27709, (919) 541–0752, *mcgee1@niehs.nih.gov.*

(Catalogue of Federal Domestic Assistance Program Nos. 93.115, Biometry and Risk Estimation—Health Risks from Environmental Exposures; 93.142, NIEHS Hazardous Waste Worker Health and Safety Training; 93.143, NIEHS Superfund Hazardous Substances—Basic Research and Education; 93.894, Resources and Manpower Development in the Environmental Health Sciences; 93.113, Biological Response to Environmental Health Hazards; 93.114, Applied Toxicological Research and Testing, National Institutes of Health, HHS)

Dated: June 10, 2009.

Jennifer Spaeth,

Director, Office of Federal Advisory Committee Policy.

[FR Doc. E9–14515 Filed 6–19–09; 8:45 am]

BILLING CODE 4140–01–P

DEPARTMENT OF HEALTH AND HUMAN SERVICES

National Institutes of Health

National Institute of Allergy and Infectious Diseases; Notice of Closed Meeting

Pursuant to section 10(d) of the Federal Advisory Committee Act, as amended (5 U.S.C. App.), notice is hereby given of the following meeting.

The meeting will be closed to the public in accordance with the provisions set forth in sections 552b(c)(4) and 552b(c)(6), Title 5 U.S.C., as amended. The grant applications and the discussions could disclose confidential trade secrets or commercial property such as patentable material, and personal information concerning individuals associated with the grant applications, the disclosure of which would constitute a clearly unwarranted invasion of personal privacy.

Name of Committee: National Institute of Allergy and Infectious Diseases Special Emphasis Panel; Ancillary Studies in Immunomodulation Clinical Trials.

Date: July 13, 2009.

Time: 4 p.m. to 7 p.m.

Agenda: To review and evaluate grant applications.

Place: National Institutes of Health, 6700B Rockledge Drive, Bethesda, MD 20817 (Telephone Conference Call).

Contact Person: Paul A. Amstad, PhD, Scientific Review Officer, Scientific Review Program, Division of Extramural Activities, NIAID/NIH/DHHS, 6700B Rockledge Drive, MSC 7616, Bethesda, MD 20892–7616, 301–402–7098, *pamstad@niaid.nih.gov.*

(Catalogue of Federal Domestic Assistance Program Nos. 93.855, Allergy, Immunology, and Transplantation Research; 93.856, Microbiology and Infectious Diseases Research, National Institutes of Health, HHS)

Dated: June 12, 2009.

Jennifer Spaeth,

Director, Office of Federal Advisory Committee Policy.

[FR Doc. E9–14513 Filed 6–19–09; 8:45 am]

BILLING CODE 4140–01–P

DEPARTMENT OF HEALTH AND HUMAN SERVICES

National Institutes of Health

National Institute of Dental & Craniofacial Research; Notice of Closed Meeting

Pursuant to section 10(d) of the Federal Advisory Committee Act, as amended (5 U.S.C. App.), notice is hereby given of the following meeting.

The meeting will be closed to the public in accordance with the provisions set forth in sections 552b(c)(4) and 552b(c)(6), Title 5 U.S.C., as amended. The grant applications and the discussions could disclose confidential trade secrets or commercial property such as patentable material and personal information concerning individuals associated with the grant applications, the disclosure of which would constitute a clearly unwarranted invasion of personal privacy.

Name of Committee: National Institute of Dental and Craniofacial Research Special Emphasis Panel;

Date: July 22, 2009.

Time: 1 p.m. to 4 p.m.

Agenda: To review and evaluate grant applications.

Place: National Institutes of Health, Bethesda, MD 20895 (Telephone Conference Call).

Contact Person: Marilyn Moore-Hoon, PhD, Scientific Review Officer, Scientific Review Branch, National Institute of Dental and Craniofacial Research, 6701 Democracy Blvd., Rm. 676, Bethesda, MD 20892–4878, 301–594–4861, *mooremar@nidcr.nih.gov.*

(Catalogue of Federal Domestic Assistance Program Nos. 93.121, Oral Diseases and Disorders Research, National Institutes of Health, HHS)

Dated: June 12, 2009.

Jennifer Spaeth,

Director, Office of Federal Advisory Committee Policy.

[FR Doc. E9–14511 Filed 6–19–09; 8:45 am]

BILLING CODE 4140–01–P

DEPARTMENT OF HEALTH AND HUMAN SERVICES

National Institutes of Health

Eunice Kennedy Shriver National Institute of Child Health & Human Development; Notice of Closed Meeting

Pursuant to section 10(d) of the Federal Advisory Committee Act, as amended (5 U.S.C. App.), notice is hereby given of the following meeting.

The meeting will be closed to the public in accordance with the provisions set forth in sections

552b(c)(4) and 552b(c)(6), Title 5 U.S.C., as amended. The grant applications and the discussions could disclose confidential trade secrets or commercial property such as patentable material, and personal information concerning individuals associated with the grant applications, the disclosure of which would constitute a clearly unwarranted invasion of personal privacy.

Name of Committee: National Institute of Child Health and Human Development Special Emphasis Panel, Community Conference.

Date: July 16–17, 2009.

Time: 8 a.m. to 5 p.m.

Agenda: To review and evaluate grant applications.

Place: Embassy Suites at the Chevy Chase Pavilion, 4300 Military Road, NW., Washington, DC 20015.

Contact Person: Michele C. Hindi-Alexander, PhD, Division of Scientific Review, National Institutes of Health, Eunice Kennedy Shriver National Institute of Child Health and Human Development, 6100 Executive Boulevard, Rm. 5B01, Bethesda, MD 20892. (301) 435–8382. *hindialm@mail.nih.gov.*

(Catalogue of Federal Domestic Assistance Program Nos. 93.864, Population Research; 93.865, Research for Mothers and Children; 93.929, Center for Medical Rehabilitation Research; 93.209, Contraception and Infertility Loan Repayment Program, National Institutes of Health, HHS)

Dated: June 12, 2009.

Jennifer Spaeth,

Director, Office of Federal Advisory Committee Policy.

[FR Doc. E9–14509 Filed 6–19–09; 8:45 am]

BILLING CODE 4140–01–P

DEPARTMENT OF HEALTH AND HUMAN SERVICES

National Institutes of Health

National Cancer Institute; Notice of Closed Meeting

Pursuant to section 10(d) of the Federal Advisory Committee Act, as amended (5 U.S.C. App.), notice is hereby given of the following meeting.

The meeting will be closed to the public in accordance with the provisions set forth in sections 552b(c)(4) and 552b(c)(6), Title 5 U.S.C., as amended. The grant applications and the discussions could disclose confidential trade secrets or commercial property such as patentable material, and personal information concerning individuals associated with the grant applications, the disclosure of which would constitute a clearly unwarranted invasion of personal privacy.

Name of Committee: National Cancer Institute Special Emphasis Panel; Grand Opportunities (GO) Grants in Human Cancer Proteomics.

Date: July 21–22, 2009.

Time: 12 p.m. to 5 p.m.

Agenda: To review and evaluate grant applications.

Place: Hilton at Old Town Alexandria, 1767 King Street, Alexandria, VA 22314.

Contact Person: Marvin L. Salin, PhD, Scientific Review Officer, Special Review and Logistics Branch, Division of Extramural Activities, National Cancer Institute, NIH, 6116 Executive Boulevard, Room 7073, Bethesda, MD 20892–8329, 301–496–0694, *msalin@mail.nih.gov*.

(Catalogue of Federal Domestic Assistance Program Nos. 93.392, Cancer Construction; 93.393, Cancer Cause and Prevention Research; 93.394, Cancer Detection and Diagnosis Research; 93.395, Cancer Treatment Research; 93.396, Cancer Biology Research; 93.397, Cancer Centers Support; 93.398, Cancer Research Manpower; 93.399, Cancer Control; 93.701, ARRA Related Biomedical Research and Research Support Awards, National Institutes of Health, HHS)

Dated: June 12, 2009.

Jennifer Spaeth,

Director, Office of Federal Advisory Committee Policy.

[FR Doc. E9–14507 Filed 6–19–09; 8:45 am]

BILLING CODE 4140–01–P

DEPARTMENT OF HEALTH AND HUMAN SERVICES

National Institutes of Health

Eunice Kennedy Shriver National Institute of Child Health & Human Development; Notice of Closed Meeting

Pursuant to section 10(d) of the Federal Advisory Committee Act, as amended (5 U.S.C. App.), notice is hereby given of the following meeting.

The meeting will be closed to the public in accordance with the provisions set forth in sections 552b(c)(4) and 552b(c)(6), Title 5 U.S.C., as amended. The grant applications and the discussions could disclose confidential trade secrets or commercial property such as patentable material, and personal information concerning individuals associated with the grant applications, the disclosure of which would constitute a clearly unwarranted invasion of personal privacy.

Name of Committee: National Institute of Child Health and Human Development Special Emphasis Panel; Women's Reproductive Health.

Date: July 13, 2009.

Time: 8 a.m. to 6 p.m.

Agenda: To review and evaluate grant applications.

Place: The Legacy Hotel, 1775 Rockville Pike, Rockville, MD 20852.

Contact Person: Dennis E. Leszczynski, PhD, Scientific Review Administrator, Division of Scientific Review, National Institute of Child Health and Human Development, NIH, 6100 Executive Blvd., Rm. 5b01, Bethesda, MD 20892, (301) 435–6884, *leszczyd@mail.nih.gov*.

(Catalogue of Federal Domestic Assistance Program Nos. 93.864, Population Research; 93.865, Research for Mothers and Children; 93.929, Center for Medical Rehabilitation Research; 93.209, Contraception and Infertility Loan Repayment Program, National Institutes of Health, HHS)

Dated: June 12, 2009.

Jennifer Spaeth,

Director, Office of Federal Advisory Committee Policy.

[FR Doc. E9–14505 Filed 6–19–09; 8:45 am]

BILLING CODE 4140–01–P

DEPARTMENT OF HEALTH AND HUMAN SERVICES

National Institutes of Health

Eunice Kennedy Shriver National Institute of Child Health & Human Development; Notice of Closed Meetings

Pursuant to section 10(d) of the Federal Advisory Committee Act, as amended (5 U.S.C. App.), notice is hereby given of the following meetings.

The meetings will be closed to the public in accordance with the provisions set forth in sections 552b(c)(4) and 552b(c)(6), Title 5 U.S.C., as amended. The grant applications and the discussions could disclose confidential trade secrets or commercial property such as patentable material, and personal information concerning individuals associated with the grant applications, the disclosure of which would constitute a clearly unwarranted invasion of personal privacy.

Name of Committee: National Institute of Child Health and Human Development Special Emphasis Panel. Arousal and Attention in High Risk Children.

Date: July 14, 2009.

Time: 1 p.m. to 4:30 p.m.

Agenda: To review and evaluate grant applications.

Place: National Institutes of Health, 6100 Executive Boulevard, Rockville, MD 20852. (Telephone Conference Call).

Contact Person: Marita R. Hopmann, PhD, Scientific Review Administrator, Division of Scientific Review, National Institute of Child Health and Human Development, 6100 Executive Boulevard, Room 5B01, Bethesda, MD 20892. (301) 435–6911. *hopmannm@mail.nih.gov.*

Name of Committee: National Institute of Child Health and Human Development Special Emphasis Panel. Biobehavioral Foundations and Development of Cognitive Competence.

Date: July 15, 2009.

Time: 1 p.m. to 4:30 p.m.

Agenda: To review and evaluate grant applications.

Place: National Institutes of Health, 6100 Executive Boulevard, Rockville, MD 20852. (Telephone Conference Call).

Contact Person: Marita R. Hopmann, PhD, Scientific Review Administrator, Division of Scientific Review, National Institute of Child Health and Human Development, 6100 Executive Boulevard, Room 5B01, Bethesda, MD 20892. (301) 435–6911. *hopmannm@mail.nih.gov.*

(Catalogue of Federal Domestic Assistance Program Nos. 93.864, Population Research; 93.865, Research for Mothers and Children; 93.929, Center for Medical Rehabilitation Research; 93.209, Contraception and Infertility Loan Repayment Program, National Institutes of Health, HHS)

Dated: June 12, 2009.

Jennifer Spaeth,

Director, Office of Federal Advisory Committee Policy.

[FR Doc. E9–14503 Filed 6–19–09; 8:45 am]

BILLING CODE 4140–01–P

DEPARTMENT OF HEALTH AND HUMAN SERVICES

Agency for Healthcare Research and Quality

Meeting of the National Advisory Council for Healthcare Research and Quality

AGENCY: Agency for Healthcare Research and Quality (AHRQ), Department of Health and Human Services.

ACTION: Notice of public meeting.

SUMMARY: In accordance with section 10(a) of the Federal Advisory Committee Act, 5 U.S.C. app. 2, this notice announces a meeting of the National Advisory Council for Healthcare Research and Quality.

DATES: The meeting will be held on Friday, July 24, 2009, from 9 a.m. to 3 p.m.

ADDRESSES: The meeting will be held in Room 800, Hubert H. Humphrey Building, 200 Independence Avenue, SW., Washington, DC 20201.

FOR FURTHER INFORMATION CONTACT: Deborah Queenan, Coordinator of the Advisory Council, at the Agency for Healthcare Research and Quality, 540 Gaither Road, Rockville, Maryland 20850, (301) 427–1330. For press-related information, please contact Karen Migdail at (301) 427–1855.

If sign language interpretation or other reasonable accommodation for a disability is needed, please contact Mr. Michael Chew, Director, Office of Equal Employment Opportunity Program, Program Support Center, on (301) 443–1144, no later than July 3, 2009. The agenda, roster, and minutes are available from Ms. Bonnie Campbell, Committee Management Officer, Agency for Healthcare Research and Quality, 540 Gaither Road, Rockville, Maryland 20850. Ms. Campbell's phone number is (301) 427–1554.

SUPPLEMENTARY INFORMATION:

I. Purpose

The National Advisory Council for Healthcare Research and Quality was established in accordance with section 921 (now section 931) of the Public Health Service Act, 42 U.S.C. 299c. In accordance with its statutory mandate, the Council is to advise the Secretary of the Department of Health and Human Services and the Director, Agency for Healthcare Research and Quality (AHRQ), on matters related to actions of AHRQ to enhance the quality, improve the outcomes, and reduce the costs of health care services; improve access to such services through scientific research; and promote improvements in clinical practice and in the organization, financing, and delivery of health care services.

The Council is composed of members of the public, appointed by the Secretary, and Federal ex-officio members.

II. Agenda

On Friday, July 24, the Council meeting will convene at 9 a.m., with the call to order by the Council Chair and approval of previous Council summary notes. The AHRQ director will present her update on current research, programs, and initiatives. The agenda will include a report from the subcommittee of Child Health Insurance Program Reauthorization Act (CHIPRA) Quality Provisions, a report on the National Quality and Disparities Reports (NHQR/NHDR) and a report on the recent Comparative Effectiveness Research Methods Symposium.

The final agenda will be available on the AHRQ Web site at *http://www.ahrq.gov* no later than July 20, 2009.

Dated: June 12, 2009.

Carolyn M. Clancy,

Director.

[FR Doc. E9–14499 Filed 6–19–09; 8:45 am]

BILLING CODE 4160–90–P

DEPARTMENT OF HEALTH AND HUMAN SERVICES

Centers for Disease Control and Prevention

Board of Scientific Counselors, Coordinating Center for Health Promotion (BSC, CCHP)

Place: CDC, Tom Harkins Global Communication Center, Auditorium B, Building 19, 1600 Clifton Road, NE., Atlanta, Georgia 30333.

Correction: This notice was published in the **Federal Register** on June 11, 2009, Volume 74, Number 111, Page 27805. The location of the meeting has been changed.

Late Statement: This notice is being published less than 15 days prior to the meeting due to programmatic issues that had to be resolved.

Contact Person for More Information: Karen Steinberg, PhD, Senior Science Officer, Coordinating Center for Health Promotion, CDC, 4770 Buford Highway, NE., Mailstop E–70, Atlanta, Georgia 30341; telephone (404) 498–6700; fax (404) 498–6880; e-mail *karen.steinberg@cdc.gov.*

The Director, Management Analysis and Services Office has been delegated the authority to sign **Federal Register** notices pertaining to announcements of meetings and other committee management activities for both CDC and the Agency for Toxic Substances and Disease Registry.

Dated: June 16, 2009.

Elaine L. Baker,

Director, Management Analysis and Services Office, Centers for Disease Control and Prevention.

[FR Doc. E9–14544 Filed 6–19–09; 8:45 am]

BILLING CODE 4163–18–P

DEPARTMENT OF HEALTH AND HUMAN SERVICES

National Institutes of Health

Center for Scientific Review; Notice of Closed Meetings

Pursuant to section 10(d) of the Federal Advisory Committee Act, as amended (5 U.S.C. App.), notice is hereby given of the following meetings.

The meetings will be closed to the public in accordance with the provisions set forth in sections 552b(c)(4) and 552b(c)(6), Title 5 U.S.C., as amended. The grant applications and the discussions could disclose confidential trade secrets or commercial property such as patentable material, and personal information concerning individuals associated with the grant

applications, the disclosure of which would constitute a clearly unwarranted invasion of personal privacy.

Name of Committee: Center for Scientific Review Special Emphasis Panel; Review of Competing Supplement Applications.
Date: July 6, 2009.
Time: 8 a.m. to 6 p.m.
Agenda: To review and evaluate grant applications.
Place: The Ritz-Carlton Hotel, 1150 22nd Street, NW., Washington, DC 20037.
Contact Person: Kenneth A. Roebuck, PhD, Scientific Review Officer, Center for Scientific Review, National Institutes of Health, 6701 Rockledge Drive, Room 5106, MSC 7852, Bethesda, MD 20892, (301) 435–1166, *roebuckk@csr.nih.gov*.

Name of Committee: Center for Scientific Review Special Emphasis Panel; CVS Supplemental Applications.
Date: July 8–9, 2009.
Time: 9 a.m. to 6 p.m.
Agenda: To review and evaluate grant applications.
Place: National Institutes of Health, 6701 Rockledge Drive, Bethesda, MD 20892 (Virtual Meeting).
Contact Person: Anshumali Chaudhari, PhD, Scientific Review Officer, Center for Scientific Review, National Institutes of Health, 6701 Rockledge Drive, Room 4124, MSC 7802, Bethesda, MD 20892, (301) 435–1210, *chaudhaa@csr.nih.gov*.

Name of Committee: AIDS and Related Research Integrated Review Group; AIDS Clinical Studies and Epidemiology Study Section.
Date: July 9–10, 2009.
Time: 8 a.m. to 6 p.m.
Agenda: To review and evaluate grant applications.
Place: Renaissance M Street Hotel, 1143 New Hampshire Avenue, NW., Washington, DC 20037.
Contact Person: Hilary D. Sigmon, PhD, Scientific Review Officer, Center for Scientific Review, National Institutes of Health, 6701 Rockledge Drive, Room 5222, MSC 7852, Bethesda, MD 20892, (301) 594–6377, *sigmonh@csr.nih.gov*.

Name of Committee: Center for Scientific Review Special Emphasis Panel; Clinical Neurophysiology, Devices, Auditory Devices and Neuroprosthesis Small Business.
Date: July 9–10, 2009.
Time: 8 a.m. to 5 p.m.
Agenda: To review and evaluate grant applications.
Place: The Ritz-Carlton Hotel, 1150 22nd Street, NW., Washington, DC 20037.
Contact Person: Keith Crutcher, PhD, Scientific Review Officer, Center for Scientific Review, National Institutes of Health, 6701 Rockledge Drive, Room 5207, MSC 7846, Bethesda, MD 20892–7846, (301) 435–1278, *crutcherka@csr.nih.gov*.

Name of Committee: Center for Scientific Review Special Emphasis Panel; DKUS Revisions.
Date: July 9, 2009.
Time: 11 a.m. to 5 p.m.
Agenda: To review and evaluate grant applications.
Place: National Institutes of Health, 6701 Rockledge Drive, Bethesda, MD 20892 (Telephone Conference Call).
Contact Person: Mushtaq A. Khan, DVM, PhD, Scientific Review Officer, Center for Scientific Review, National Institutes of Health, 6701 Rockledge Drive, Room 2176, MSC 7818, Bethesda, MD 20892, (301) 435–1778, *khanm@csr.nih.gov*.

Name of Committee: Center for Scientific Review Special Emphasis Panel; EPIC Member Conflict.
Date: July 9, 2009.
Time: 11 a.m. to 4 p.m.
Agenda: To review and evaluate grant applications.
Place: National Institutes of Health, 6701 Rockledge Drive, Bethesda, MD 20892 (Virtual Meeting).
Contact Person: Jose Fernando Arena, PhD, MD, Scientific Review Officer, Center for Scientific Review, National Institutes of Health, 6701 Rockledge Drive, Room 3135, MSC 7770, Bethesda, MD 20892, (301) 435–1735, *arenaj@mail.nih.gov*.

Name of Committee: Center for Scientific Review Special Emphasis Panel; Advanced Neural Prosthetics Research and Development.
Date: July 10, 2009.
Time: 8 a.m. to 5 p.m.
Agenda: To review and evaluate grant applications
Place: The Ritz-Carlton Hotel, 1150 22nd Street, NW., Washington, DC 20037.
Contact Person: Keith Crutcher, PhD, Scientific Review Officer, Center for Scientific Review, National Institutes of Health, 6701 Rockledge Drive, Room 5207, MSC 7846, Bethesda, MD 20892–7846, (301) 435–1278, *crutcherka@csr.nih.gov*.

Name of Committee: Center for Scientific Review Special Emphasis Panel; Competitive Revisions: Clinical Neurophysiology, Devices, Auditory Devices and Neuroprosthesis Small Business.
Date: July 10, 2009
Time: 8 a.m. to 5 p.m.
Agenda: To review and evaluate grant applications.
Place: The Ritz-Carlton Hotel, 1150 22nd Street, NW., Washington, DC 20037.
Contact Person: Keith Crutcher, PhD, Scientific Review Officer, Center for Scientific Review, National Institutes of Health, 6701 Rockledge Drive, Room 5207 MSC 7846, Bethesda, MD 20892–7846, 301–435–1278, *crutcherka@csr.nih.gov*.

Name of Committee: AIDS and Related Research Integrated Review Group; Behavioral and Social Science Approaches to Preventing HIV/AIDS Study Section.
Date: July 13–14, 2009.
Time: 8 a.m. to 6 p.m.
Agenda: To review and evaluate grant applications.
Place: The Westin St. Francis, 335 Powell Street, San Francisco, CA 94102.
Contact Person: Jose H. Guerrier, PhD, Scientific Review Officer, Center for Scientific Review, National Institutes of Health, 6701 Rockledge Drive, Room 5222, MSC 7852, Bethesda, MD 20892, 301–435–1137, *guerriej@csr.nih.gov*.

Name of Committee: Center for Scientific Review Special Emphasis Panel; Biological Chemistry, Biophysics and Cell Biology Small Business Panel.
Date: July 13–14, 2009.
Time: 8 a.m. to 5 p.m.
Agenda: To review and evaluate grant applications.
Place: Hyatt Regency Bethesda, One Bethesda Metro Center, 7400 Wisconsin Avenue, Bethesda, MD 20814.
Contact Person: Sergei Ruvinov, PhD, Scientific Review Officer, Center for Scientific Review, National Institutes of Health, 6701 Rockledge Drive, Room 4158, MSC 7806, Bethesda, MD 20892, 301–435–1180, *ruvinser@csr.nih.gov*.

Name of Committee: Center for Scientific Review Special Emphasis Panel; Biophysical and Biochemical Sciences Fellowships.
Date: July 16–17, 2009.
Time: 8:30 a.m. to 5 p.m.
Agenda: To review and evaluate grant applications.
Place: Hyatt Regency Bethesda, One Bethesda Metro Center, 7400 Wisconsin Avenue, Bethesda, MD 20814.
Contact Person: Denise Beusen, PhD, Scientific Review Officer, Center for Scientific Review, National Institutes of Health, 6701 Rockledge Drive, Room 4142, MSC 7806, Bethesda, MD 20892, (301) 435–1267, *beusend@csr.nih.gov*.

Name of Committee: Center for Scientific Review Special Emphasis Panel; DKUS Competitive Revisions.
Date: July 16, 2009.
Time: 1 p.m. to 4 p.m.
Agenda: To review and evaluate grant applications.
Place: National Institutes of Health, 6701 Rockledge Drive, Bethesda, MD 20892 (Telephone Conference Call).
Contact Person: Peter J. Perrin, PhD, Scientific Review Officer, Center for Scientific Review, National Institutes of Health, 6701 Rockledge Drive, Room 2180, MSC 7818, Bethesda, MD 20892, (301) 435–0682, *perrinp@csr.nih.gov*.

Name of Committee: Center for Scientific Review Special Emphasis Panel, Small Business: Biomaterials, Delivery Systems, and Nanotechnology.
Date: July 20–21, 2009.
Time: 8 a.m. to 4 p.m.
Agenda: To review and evaluate grant applications.
Place: DoubleTree Hotel Bethesda, 8120 Wisconsin Avenue, Bethesda, MD 20814.
Contact Person: Alexander Gubin, PhD, Scientific Review Officer, Center for Scientific Review, National Institutes of Health, 6701 Rockledge Drive, Room 4196, MSC 7812, Bethesda, MD 20892, 301–435–2902, *gubina@csr.nih.gov*.

Name of Committee: Center for Scientific Review Special Emphasis Panel; Member Conflict: Memory, Sleep, and Addiction Revisions.
Date: July 29–30, 2009.
Time: 8 a.m. to 5 p.m.
Agenda: To review and evaluate grant applications.
Place: National Institutes of Health, 6701 Rockledge Drive, Bethesda, MD 20892 (Virtual Meeting).
Contact Person: Edwin C. Clayton, PhD, Scientific Review Officer, Center for

Scientific Review, National Institutes of Health, 6701 Rockledge Drive, Room 5095C, MSC 7844, Bethesda, MD 20892, (301) 402–1304, *claytone@csr.nih.gov*.

(Catalogue of Federal Domestic Assistance Program Nos. 93.306, Comparative Medicine; 93.333, Clinical Research, 93.306, 93.333, 93.337, 93.393–93.396, 93.837–93.844, 93.846–93.878, 93.892, 93.893, National Institutes of Health, HHS)

Dated: June 11, 2009

Jennifer Spaeth,

Director, Office of Federal Advisory Committee Policy.

[FR Doc. E9–14525 Filed 6–19–09; 8:45 am]

BILLING CODE 4140–01–P

DEPARTMENT OF HEALTH AND HUMAN SERVICES

National Institutes of Health

Center for Scientific Review; Notice of Closed Meeting

Pursuant to section 10(d) of the Federal Advisory Committee Act, as amended (5 U.S.C. App.), notice is hereby given of the following meeting.

The meeting will be closed to the public in accordance with the provisions set forth in sections 552b(c)(4) and 552b(c)(6), Title 5 U.S.C., as amended. The grant applications and the discussions could disclose confidential trade secrets or commercial property such as patentable material, and personal information concerning individuals associated with the grant applications, the disclosure of which would constitute a clearly unwarranted invasion of personal privacy.

Name of Committee: Center for Scientific Review Special Emphasis Panel. CMBK Conflicts.

Date: June 24, 2009.

Time: 11 a.m. to 12 p.m.

Agenda: To review and evaluate grant applications.

Place: National Institutes of Health, 6701 Rockledge Drive, Bethesda, MD 20892. (Telephone Conference Call).

Contact Person: Ryan G. Morris, PhD, Scientific Review Officer, Center for Scientific Review, National Institutes of Health, 6701 Rockledge Drive, Room 4205, MSC 7814, Bethesda, MD 20892. 301–435–1501. *morrisr@csr.nih.gov*.

This notice is being published less than 15 days prior to the meeting due to the timing limitations imposed by the review and funding cycle.

(Catalogue of Federal Domestic Assistance Program Nos. 93.306, Comparative Medicine; 93.333, Clinical Research, 93.306, 93.333, 93.337, 93.393–93.396, 93.837–93.844, 93.846–93.878, 93.892, 93.893, National Institutes of Health, HHS)

Dated: June 10, 2009.

Jennifer Spaeth,

Director, Office of Federal Advisory Committee Policy.

[FR Doc. E9–14522 Filed 6–19–09; 8:45 am]

BILLING CODE 4140–01–P

DEPARTMENT OF HEALTH AND HUMAN SERVICES

National Institutes of Health

National Institute of Mental Health; Notice of Closed Meetings

Pursuant to section 10(d) of the Federal Advisory Committee Act, as amended (5 U.S.C. App.), notice is hereby given of the following meetings.

The meetings will be closed to the public in accordance with the provisions set forth in sections 552b(c)(4) and 552b(c)(6), Title 5 U.S.C., as amended. The grant applications and the discussions could disclose confidential trade secrets or commercial property such as patentable material, and personal information concerning individuals associated with the grant applications, the disclosure of which would constitute a clearly unwarranted invasion of personal privacy.

Name of Committee: National Institute of Mental Health Special Emphasis Panel. New Drug Developments.

Date: July 6–7, 2009.

Time: 8 a.m. to 5 p.m.

Agenda: To review and evaluate grant applications.

Place: Embassy Suites at the Chevy Chase Pavilion, 4300 Military Road, NW., Washington, DC 20015.

Contact Person: Francois Boller, MD, PhD, Scientific Review Officer, Division of Extramural Activities, National Institute of Mental Health, NIH, Neuroscience Center, 6001 Executive Blvd., Room 6142, MSC 9606, Bethesda, MD 20892–9606. 301–443–1513. *bollerf@mail.nih.gov*.

Name of Committee: National Institute of Mental Health Special Emphasis Panel. ARRA: Supporting New Faculty Recruitment to Enhance Research Resources.

Date: July 7, 2009.

Time: 8 a.m. to 5 p.m.

Agenda: To review and evaluate grant applications.

Place: Melrose Hotel, 2430 Pennsylvania Ave., NW., Washington, DC 20037.

Contact Person: David M. Armstrong, PhD, Scientific Review Officer, Division of Extramural Activities, National Institute of Mental Health, NIH, Neuroscience Center/Room 6138/MSC 9608, 6001 Executive Boulevard, Bethesda, MD 20892–9608. 301–443–3534. *armstrda@mail.nih.gov*.

(Catalogue of Federal Domestic Assistance Program Nos. 93.242, Mental Health Research Grants; 93.281, Scientist Development Award, Scientist Development Award for Clinicians, and Research Scientist Award; 93.282, Mental Health National Research Service Awards for Research Training; 93.701, ARRA Related Biomedical Research and Research Support Awards, National Institutes of Health, HHS)

Dated: June 15, 2009.

Jennifer Spaeth,

Director, Office of Federal Advisory Committee Policy.

[FR Doc. E9–14506 Filed 6–19–09; 8:45 am]

BILLING CODE 4140–01–P

DEPARTMENT OF HEALTH AND HUMAN SERVICES

National Institutes of Health

Eunice Kennedy Shriver National Institute of Child Health & Human Development; Notice of Closed Meeting

Pursuant to section 10(d) of the Federal Advisory Committee Act, as amended (5 U.S.C. App.), notice is hereby given of the following meeting.

The meeting will be closed to the public in accordance with the provisions set forth in sections 552b(c)(4) and 552b(c)(6), Title 5 U.S.C., as amended. The grant applications and the discussions could disclose confidential trade secrets or commercial property such as patentable material, and personal information concerning individuals associated with the grant applications, the disclosure of which would constitute a clearly unwarranted invasion of personal privacy.

Name of Committee: National Institute of Child Health and Human Development Special Emphasis Panel. Gene Therapy for Metabolic Disorders.

Date: July 10, 2009.

Time: 12 p.m. to 4 p.m.

Agenda: To review and evaluate grant applications.

Place: National Institutes of Health, 6100 Executive Boulevard, Room 5B01, Rockville, MD 20852. (Telephone Conference Call).

Contact Person: Peter Zelazowski, PhD, Scientific Review Officer, Division of Scientific Review, Eunice Kennedy Shriver National Institute of Child Health and Human Development, NIH, 6100 Executive Boulevard, Rm. 5B01, Bethesda, MD 20892–7510. 301–435–6902. *peter.zelazowski@nih.gov*.

(Catalogue of Federal Domestic Assistance Program Nos. 93.864, Population Research; 93.865, Research for Mothers and Children; 93.929, Center for Medical Rehabilitation Research; 93.209, Contraception and Infertility Loan Repayment Program, National Institutes of Health, HHS)

Dated: June 11, 2009.

Jennifer Spaeth,

Director, Office of Federal Advisory Committee Policy.

[FR Doc. E9–14500 Filed 6–19–09; 8:45 am]

BILLING CODE 4140–01–P

DEPARTMENT OF HEALTH AND HUMAN SERVICES

National Institutes of Health

National Institute on Drug Abuse; Notice of Closed Meetings

Pursuant to section 10(d) of the Federal Advisory Committee Act, as amended (5 U.S.C. App.), notice is hereby given of the following meetings.

The meetings will be closed to the public in accordance with the provisions set forth in sections 552b(c)(4) and 552b(c)(6), Title 5 U.S.C., as amended. The grant applications and the discussions could disclose confidential trade secrets or commercial property such as patentable material, and personal information concerning individuals associated with the grant applications, the disclosure of which would constitute a clearly unwarranted invasion of personal privacy.

Name of Committee: National Institute on Drug Abuse, Special Emphasis Panel NIDA Statistical and Computational Genetics R25.
Date: June 29, 2009.
Time: 10 a.m. to 11:30 a.m.
Agenda: To review and evaluate grant applications.
Place: National Institutes of Health, Executive Blvd, Rockville, MD 20852 (Telephone Conference Call).
Contact Person: Mark Swieter, PhD. Chief, Training and Special Projects Review Branch, Office of Extramural Affairs, National Institute on Drug Abuse, NIH, DHHS, 6101 Executive Boulevard, Suite 220, Bethesda, MD 20892–8401. (301) 435–1389. *ms80x@nih.gov.*

Name of Committee: National Institute on Drug Abuse, Special Emphasis Panel Program Project (P01) Applications.
Date: July 1, 2009.
Time: 1 p.m. to 5 p.m.
Agenda: To review and evaluate grant applications.
Place: National Institutes of Health, 6101 Executive Boulevard, Rockville, MD 20852 (Telephone Conference Call).
Contact Person: Jose F Ruiz, PhD., Scientific Review Administrator, Office of Extramural Affairs, National Institute on Drug Abuse, NIH, 6101 Executive Blvd., Rm. 213, MSC 8401, Bethesda, MD 20892. 301–451–3086. *ruizjf@nida.nih.gov.*

Name of Committee: National Institute on Drug Abuse, Special Emphasis Panel I/START Review Panel.
Date: July 2, 2009.
Time: 8:30 a.m. to 11:30 a.m.
Agenda: To review and evaluate grant applications.
Place: National Institutes of Health, 6101 Executive Boulevard, Rockville, MD 20852 (Virtual Meeting).
Contact Person: Gerald L. McLaughlin, PhD., Scientific Review Administrator, Office of Extramural Affairs, National Institute on Drug Abuse, NIH, DHHS, Room 220, MSC 8401, 6101 Executive Blvd., Bethesda, MD 20892–8401. 301–402–6626. *gm145a@nih.gov.*

Name of Committee: National Institute on Drug Abuse, Special Emphasis Panel NIDA Avant-Garde Award.
Date: July 14–15, 2009.
Time: 8 a.m. to 5 p.m.
Agenda: To review and evaluate grant applications.
Place: Westin Grand, 2350 M Street, NW., Washington, DC 20037.
Contact Person: Nadine Rogers, PhD., Scientific Review Administrator, Office of Extramural Affairs, National Institute on Drug Abuse, NIH, DHHS, Room 220, MSC 8401, 6101 Executive Boulevard, Bethesda, MD 20892–8401. 301–402–2105. *rogersn2@nida.nih.gov.*

(Catalogue of Federal Domestic Assistance Program Nos. 93.279, Drug Abuse and Addiction Research Programs, National Institutes of Health, HHS)

Dated: June 10, 2009.

Jennifer Spaeth,

Director, Office of Federal Advisory Committee Policy.

[FR Doc. E9–14498 Filed 6–19–09; 8:45 am]

BILLING CODE 4140–01–M

DEPARTMENT OF HOUSING AND URBAN DEVELOPMENT

[Docket No. FR–5300–N–03]

Notice of Availability: Notice of Funding Availability (NOFA) for HUD's Fiscal Year (FY) 2009 Housing Counseling Training Program

AGENCY: Office of the Assistant Secretary for Housing—Federal Housing Commissioner, HUD.

ACTION: Notice.

SUMMARY: HUD announces the availability on its Web site of the applicant information, submission deadlines, funding criteria and other requirements for HUD's Housing Counseling Training Program NOFA for FY2009. Approximately $5 million is made available through this NOFA under the Department of Housing and Urban Development Appropriations Act, 2009 (Pub. L. 111–8, approved March 11, 2009) for HUD's Housing Counseling Training Program. Applicants for HUD's Housing Counseling Training Program must address the requirements established by HUD's Fiscal Year 2009 Notice of Funding Availability (NOFA) Policy Requirements and General Section to HUD's FY2009 NOFAs for Discretionary Programs (General Section) published on December 29, 2008 (73 FR 79548), as amended April 16, 2009 (74 FR 17685). Applicants should take particular note that they must follow the application instructions contained in the FY2009 Housing Counseling Training Program NOFA and not use those in the General Section. The notice providing information regarding the application process, funding criteria and eligibility requirements is available on the HUD Web site at *http://www.hud.gov/offices/adm/grants/fundsavail.cfm.*

FOR FURTHER INFORMATION CONTACT: Questions regarding specific program requirements should be directed to the agency contact identified in the program NOFA. Questions regarding the 2009 General Section should be directed to the Office of Departmental Grants Management and Oversight at 202–708–0667 (this is not a toll-free number) or the NOFA Information Center at 1–800–HUD–8929 (toll-free). Persons with hearing or speech impairments may access these numbers via TTY by calling the Federal Information Relay Service at 1–800–877–8339.

Dated: June 12, 2009.

Brian D. Montgomery,

Assistant Secretary for Housing—Federal Housing Commissioner.

[FR Doc. E9–14626 Filed 6–19–09; 8:45 am]

BILLING CODE 4210–67–P

DEPARTMENT OF HOUSING AND URBAN DEVELOPMENT

[Docket No. FR–5300–N–12]

Notice of Availability: Notice of Funding Availability (NOFA) for Fiscal Year (FY) 2009 Capacity Building for Community Development and Affordable Housing Grants

AGENCY: Office of the Assistant Secretary for Community Planning and Development, HUD.

ACTION: Notice.

SUMMARY: Through this notice, HUD announces the availability on its Web site of the application information, submission deadlines, funding criteria, and other requirements for the FY2009 Capacity Building for Community Development and Affordable Housing (Capacity Building) NOFA. The FY2009 Capacity Building NOFA makes $34 million in assistance to carry out the eligible activities related to affordable housing and community development for the section 4 capacity building program, of which at least $5 million shall be made available for rural capacity building activities. Applicants for assistance under the Capacity Building NOFA must address applicable requirements found in the Notice of HUD's Fiscal Year 2009 Notice of Funding Availability (NOFA) Policy Requirements and General section to the

HUD's FY2009 NOFAs for Discretionary Programs published on December 29, 2008 (73 FR 79548), as amended on April 16, 2009 (74 FR 17685). Applicants should take particular note that they should follow the application submission instructions contained in this NOFA and not use those in the General section. The notice providing information regarding the application process, funding criteria and eligibility requirements is available on the HUD Web site at *http://www.hud.gov/offices/adm/grants/fundsavail.cfm.*

FOR FURTHER INFORMATION CONTACT: For information concerning the Capacity Building NOFA program, a Community Planning and Development Specialist, Office of Rural Housing and Economic Development, Office of Community Planning and Development, Department Housing and Urban Development, 451 Seventh Street, SW., Room 7137, Washington, DC 20410–7000; telephone (202) 708–2290 (this is not a toll-free number) or 1–877–787–2526 (this is a toll-free number). Persons with speech or hearing impairments may access this telephone number via TTY by calling the toll-free Federal Information Relay Service during working hours at 800–877–8339.

Dated: May 20, 2009.

Nelson R. Bregòn,

General Deputy Assistant Secretary for Community Planning and Development.

[FR Doc. E9–14632 Filed 6–19–09; 8:45 am]

BILLING CODE 4210–67–P

DEPARTMENT OF HOUSING AND URBAN DEVELOPMENT

[Docket No. FR–5332–N–01]

Proposed Notice of Funding Availability (NOFA) for HUD's Fiscal Year (FY) 2009 Rental Assistance for Non-Elderly Persons With Disabilities; Request for Comments

AGENCY: Office of the Assistant Secretary for Public and Indian Housing, HUD.

ACTION: Proposed notice of HUD's Fiscal Year 2009 Notice of Funding Availability (NOFA) for Rental Assistance for Non-Elderly Persons with Disabilities and request for comments.

SUMMARY: The Omnibus Appropriations Act, 2009 (Pub. L. 111–8) makes available $30 million for incremental Section 8 Housing Choice Vouchers (HCV) for non-elderly disabled families served by entities (which this NOFA will limit to public housing agencies (PHAs)) with demonstrated experience and resources for supportive services). This money should fund approximately 4,000 HCVs. Approximately 25 percent ($7,500,000 and 1,000 HCVs) will be made available for non-elderly families transitioning out of nursing homes and other institutions into the community. To permit the Department to better design the distribution of this assistance, particularly as it relates to transitioning non-elderly disabled families out of nursing homes and other institutions and the NOFA's tie-in to the Money Follows the Person (MFP) Demonstration administered by the Department of Health and Human Services, HUD is soliciting public comment. Comments addressing the threshold factors used to distribute this assistance and whether HUD should establish a more performance-based method for distributing vouchers, and how the State institutional transition programs such as the MFP Demonstration can work effectively with the PHAs that are awarded vouchers for this purpose are also welcome. All comments will be considered during the development of the final NOFA published by HUD.

DATES: *Comment Due Date:* July 13, 2009.

ADDRESSES: Interested persons are invited to submit comments to the U.S. Department of Housing and Urban Development, Office of Public and Indian Housing, Housing Voucher Management and Operations Division, 451 7th Street, SW., Room 4210, Washington, DC 20410, ATTN: Phyllis Smelkinson. Individuals interested in submitting comments electronically may forward them by e-mail to *NEDVoucherNOFA@hud.gov*. All comments must refer to the above docket number and title. Facsimile (FAX) comments will not be accepted.

FOR FURTHER INFORMATION CONTACT: Questions regarding specific HCV program requirements should be directed to Phyllis Smelkinson by phone at (202) 402–4138 or by e-mail at *Phyllis.A.Smelkinson@hud.gov* or the NOFA Information Center at (800) HUD–8929 (toll-free). Persons with hearing or speech impairments may access these numbers via TTY by calling the Federal Information Relay Service at (800) 877–8339. The NOFA Information Center is open between the hours of 10 a.m. and 6:30 p.m. eastern time, Monday through Friday, except Federal holidays.

Overview Information

A. *Federal Agency Name:* Department of Housing and Urban Development, Office of Public and Indian Housing.

B. *Funding Opportunity Title:* Rental Assistance for Non-Elderly Persons With Disabilities.

C. *Announcement Type:* Initial announcement.

D. *Funding Opportunity Number:* OMB Approval Numbers applicable to this NOFA are 2577–0169 and 2577–0083

E. *Catalog of Federal Domestic Assistance (CFDA) Number(s):* 14.871, Section 8 Housing Choice Vouchers.

F. *Dates:*

1. *Application Receipt Requirements and Date:* HUD is not currently accepting applications for this assistance. HUD will require applicants to submit applications electronically through Grants.gov. Please see the Notice of HUD's Fiscal Year (FY) 2009 Notice of Funding Availability (NOFA); Policy Requirements and General Section to HUD's FY 2009 NOFAs for Discretionary Programs (General Section) published in the **Federal Register** on December 29, 2008 (73 FR 79548), for information on the Grants.gov registration process. All applicants must have a DUN and Bradstreet Universal Numbering System (DUNS) number, have a current registration in the Central Contractor Registration (CCR), and be registered with Grants.gov to submit an application electronically. All applicants regardless of submission through Grants.gov or in paper format must have a DUNS number and be registered in CCR to receive an award of funds from HUD. See the General Section for further details.

2. *Estimated Grant Award Date.* The estimated award date will be included in the final NOFA published by HUD.

G. *Additional Important Overview Information:*

1. Approximately $22,500,000 that will support about 3,000 HCVs under this NOFA will enable non-elderly disabled families on a PHA's waiting list to access affordable housing (Category 1). Approximately $7,500,000 that will support about 1,000 HCVs under this NOFA will enable non-elderly persons with disabilities to transition from nursing homes and other health care institutions into the community (Category 2). Individuals in Category 2 must be admitted from the PHA's waiting list and assisted through a preference as stated in the PHA's Administrative Plan for transitioning persons from institutions. Any non-elderly disabled family or individual on the PHA waiting list is eligible for a Category 1 voucher, however, HUD encourages PHAs to consider establishing a selection preference to make some or all of its Category 1

allocation available to disabled families or individuals that without housing assistance, are at risk of institutionalization.

2. *Application materials.* The FY2009 General Section and Notice of Funding Availability (NOFA) and application materials will be available for download via the Federal portal *http://www.grants.gov* at *http://www.grants.gov/applicants/apply_for_grants.jsp.*

Full Text of Announcement

I. Funding Opportunity Description

A. Available Funds

This NOFA announces the availability of $30 million in one-year budget authority for HCVs for non-elderly disabled families which should fund approximately 4,000 vouchers. Of that amount, $22,500,000 will be allocated for non-elderly disabled families on the PHA's waiting list and up to $7,500,000 will be allocated for non-elderly disabled families transitioning from nursing homes and other institutions into the community. Any funds remaining unobligated under HUD's FY 2008 NOFAs entitled ''Rental Assistance for Non-Elderly Persons with Disabilities in Support of Designated Housing Plans (Designated Housing)'' (November 28, 2008, 73 FR 72513) or ''Rental Assistance for Non-Elderly Persons with Disabilities Related to Certain Types of Section 8 Project-Based Developments and Sections 202, 221(d)(3), and 236 Developments (Certain Developments)'' (November 28, 2008, 73 FR 72507) will also be made available under this NOFA under Category 1. (Pursuant to the Consolidated Appropriations Act, 2008, any funds still remaining unobligated under the aforementioned NOFAs will be available for other non-elderly disabled families through a subsequent NOFA. Based on that authority, if there are any funds still remaining unobligated under those NOFAs, that funding will be assigned to Category 1 under this NOFA.)

B. Purpose of This Program

HCVs under this NOFA will enable non-elderly disabled families to access affordable housing.

C. Legal Authority

See **SUMMARY** section above.

D. Definitions of Terms

The following definitions apply to funding available under this NOFA.

1. Elderly Family

A family whose head, spouse, or sole member is 62 years or older. It may include two or more elderly persons living together, or one or more elderly persons living with one or more persons determined under the public housing agency plan to be essential to their care or well being.

2. Non-elderly Disabled Family

A family that does not meet the definition of an elderly family whose head, spouse, or sole member is a person with disabilities.

3. Person With Disabilities

See definition under 24 CFR 5.403.

4. Nursing Homes and/or Other Institutions

This definition includes intermediate care facilities and specialized institutions that care for the mentally retarded, developmentally disabled or mentally ill, but excludes board and care facilities (*e.g.* adult homes, adult day care, adult congregate living). For full definitions of these eligible facilities, please reference Chapter 2 of Handbook 4600.1 REV–1: *Section 232 Mortgage Insurance for Residential Care Facilities.*

II. Award Information

A. HCV Funding Process

For each category, HUD will only fund one application per PHA under this announcement. This one-application-per-PHA limit under each category applies regardless of whether or not the PHA is a State or regional PHA. A PHA may submit an application for funding under Category 1 and an application for funding under Category 2.

1. Maximum Voucher Request

A PHA may apply for a total of 10 percent of its HCV authorized baseline units or 200 vouchers, whichever is less. The PHA may apply for both categories under this NOFA, but may not exceed the maximum voucher request. A separate application must be submitted for each category. For Category 2, the number of vouchers requested by the PHA may not exceed the number of vouchers that the partnering resource agency is projecting will be needed to assist transitioning individuals over a 12-month period (*see* section IV.B.2.f. of this NOFA).

2. Determination of Funding Amount for the Applicant's Requested Number of Vouchers

HUD's Housing Voucher Financial Management Division will determine the amount of one-year budget authority that an applicant will be awarded under this NOFA based on the PHA's per unit cost for 2009 renewal funding or 2010 renewal funding, depending on the most recently available data. Administrative fees are not included in this funding and will be determined in accordance with section 10 of Public and Indian Housing (PIH) Notice 2008–15 (HA) or a subsequent administrative fee notice (a copy of all PIH notices referenced in this NOFA may be downloaded at *http://www.hudclips.org*). PIH Moving to Work (MTW) agencies will be funded under this NOFA in accordance with their MTW agreements.

3. Unfunded Approvable Applications

PHAs with approvable applications that are not funded in whole or in part due to insufficient funds available under this NOFA will not be funded.

III. Eligibility Information

A. Eligible Applicants

PHAs that currently administer a HCV program are eligible to apply for funding under this NOFA.

B. Cost Sharing or Matching

None required.

C. Other Requirements

1. Eligible Activities

HCVs awarded under this NOFA will be subject to all of the requirements of 24 CFR part 982. MTW agencies may administer these vouchers in accordance with their MTW agreements unless they are inconsistent with Appropriations Act requirements or the requirements of this NOFA. The Omnibus Appropriations Act of 2009 states that assistance made available under this section of the Act shall continue to remain available for non-elderly families upon turnover. Therefore, upon turnover, these vouchers (both Category 1 and Category 2, as defined below, must be made available only to non-elderly disabled families on the PHA's waiting list. Note that a Category 2 voucher does not necessarily have to be issued to another Category 2 family upon turnover, but must be re-issued to a non-elderly disabled family.

2. Threshold Requirements

a. All applicants must meet all threshold requirements provided in Section III.C of the General Section except for Section III.C.2.d and Section III.C.4.b., where the requirements under this NOFA are applicable as follows:

(1) Section III.C.2.d. (Conducting Business in Accordance with Core

Values and Ethical Standards). To reflect core values, all applicant PHAs awarded under this NOFA shall develop and maintain a written code of conduct in the PHA's administrative plan that: (a) Requires compliance with the conflict of interest requirements of the HCV program cited in 24 CFR 982.161; and (b) Prohibits the solicitation or acceptance of gifts or gratuities in excess of a nominal value by an officer or employee of the HA or any contractor, subcontractor, or agent of the PHA. The PHA's administrative plan shall state the PHA policies concerning PHA administrative and disciplinary remedies for violation of the PHA code of conduct. The PHA shall inform all officers, employees and agents of its organization of the PHA's code of conduct.

(2). Section III.C.4.b. (Affirmatively Furthering Fair Housing). Prior to the application due date under this NOFA, each applicant must submit to the public housing director in the applicant's local HUD field office an addendum to the applicant's HCV administrative plan that outlines reasonable steps the applicant will take to affirmatively further fair housing in regard to the vouchers awarded under this NOFA. Reasonable steps must include informing affected applicants on how to file a fair housing complaint including the provision of the toll free number for the Housing Discrimination Hotline: 1–800–669–9777 and the Federal Information Relay Service at (800) 887–8339.

Further, an applicant must comply with the affirmatively furthering fair housing requirements of 24 CFR Section 903.7(o) by: (a) Examining its programs or proposed programs; (b) identifying any impediments to fair housing choice within those programs; (c) addressing those impediments in a reasonable fashion in view of the resources available; (d) working with local jurisdictions to implement any of the jurisdiction's initiatives to affirmatively further fair housing that require the PHA's involvement; and (e) maintaining records reflecting these analyses and actions. Further, applicant PHAs are encouraged to take the following proactive steps in addressing accessibility problems for persons with disabilities: (f) Where requested by an individual, assist program applicants and participants gain access to supportive services available within the community, but not require eligible applicants or participants to accept supportive services as a condition of continued participation in the program; (g) Identify public and private funding sources to assist participants with disabilities in covering the costs of structural alterations and other accessibility features that are needed as accommodations for their disabilities; (h) Not deny persons who qualify for a HCV under this program other housing opportunities, or otherwise restrict access to PHA programs to eligible applicants who choose not to participate; (i) Provide housing search assistance; (j) In accordance with rent reasonableness requirements, approve higher rents to owners that provide accessible units with structural modifications for persons with disabilities; and (k) Provide technical assistance, through referrals to local fair housing and equal opportunity offices, to owners interested in making reasonable accommodations or units accessible to persons with disabilities.

b. Applications under this NOFA must also meet the following threshold requirements to be eligible for funding under this NOFA.

(1) Each applicant must meet the PIC reporting requirements of 95 percent under PIH Notice 2007–29(HA) that will be assessed for the month immediately preceding the month in which the applications under this NOFA are due. MTW agencies must meet a reporting requirement of 85 percent, consistent with existing MTW reporting requirements.

(2) Each applicant must have achieved points (15 or 20) under the Section 8 Management Assessment Program (SEMAP) leasing indicator (24 CFR 985.3(n)) and not be designated as troubled for its most recent assessed fiscal year. MTW agencies that are not required to report under SEMAP shall be held to the 95 percent lease-up and budget authority utilization requirements referenced above. These MTW agencies are required to submit a certification with their application certifying that they are not required to report under SEMAP, and that they meet the 95 percent lease-up or budget authority utilization requirements.

(3) The PHA applicant must not have any major unresolved program management findings from an Inspector General audit, HUD management review or Independent Public Accountant (IPA) audit for the PHA's HCV program or other significant program compliance problems (such as fair housing and/or civil rights violations or findings) that were not resolved or in the process of being resolved (as determined by the local field office) prior to this NOFA's application deadline. Major program management findings, or significant program compliance problems, are those that would cast doubt on the capacity of the applicant to effectively administer any new HCV funding in accordance with applicable HUD regulatory and statutory requirements.

(4) The PHA must not be involved in litigation where HUD determines that the litigation may seriously impede the ability of the applicant to administer the vouchers.

(5) The PHA must demonstrate experience and resources for supportive services (*See* Section IV.B.e. and Section IV.B.f.).

3. Eligible Participants

Non-elderly disabled families that are income eligible under 24 CFR 982.201(b)(1).

4. Environmental Review

In accordance with 24 CFR 50.19(b)(11) and 58.35(b)(1) of the HUD regulations, tenant-based rental activities under this program are categorically excluded from the requirements of the National Environmental Policy Act of 1969 (NEPA) and are not subject to environmental review under the related laws and authorities. Activities under the homeownership option for existing units and for units under construction at the time the family enters into the contract for sale are categorically excluded from NEPA requirements and excluded from other environmental requirements under 24 CFR Section 58.5 in accordance with 24 CFR Section 58.35(b)(5), but PHAs are responsible for the environmental requirements in 24 CFR Section 982.626(c). With regard to activities under the homeownership option for units not yet under construction at the time the family enters into the contract for sale, the additional environmental review requirements referenced in 24 CFR Sections 982.628(e), 982.631(c)(3) and 982.637(b) also apply in addition to Section 982.626(c), and the PHA shall submit all relevant environmental information to the responsible entity or to HUD to assist in the completion of those requirements.

IV. Application and Timely Receipt Information

HUD is not currently accepting applications. The information presented in this Section IV is offered to provide individuals interested in submitting public comment to consider HUD's proposed application procedures.

A. Addresses to Request Application Package

This section describes how the applicant may obtain application forms, additional information about the

General Section, and how to obtain technical assistance.

1. Copies of this published NOFA and related application forms may be downloaded from the Grants.gov Web site at *http://www07.grants.gov/applicants/apply_for_grants.jsp.* If the applicant has difficulty accessing the information, it may receive customer support from Grants.gov by calling the help line at (800) 518–GRANTS ((800) 518–4726) or by sending an e-mail to *support@grants.gov.* The operators will assist the applicant in accessing the information. If the applicant does not have Internet access and need to obtain a copy of this NOFA, it can contact HUD's NOFA Information Center toll-free at (800) HUD–8929. Persons with hearing or speech impairments may call the Federal Information Relay Service at (800) 877–8339.

B. Content of Application Under This NOFA

Each PHA must complete the following forms:

1. Form SF–424, *Application for Federal Assistance.* Every application must contain a SF–424 as the cover page to the application. When completing this form, the Federal Identifier requested in section 5a is the PHA's five digit number (*e.g.,* MD035 or AK002). PHA applicants should estimate proposed start date and end date in section 17. In Section 18 (Estimated Funding), complete only 18.a and 18.g. The amount entered in both fields should be the total number of vouchers requested in Section B of the form HUD–52515 times the housing assistance payments per unit cost for 2009 HCV renewal funding or 2010 HCV renewal funding, depending on the most recent available data.

2. Form HUD–52515, *Funding Application, Section 8 Tenant-Based Assistance, Rental Certificate Program, Rental Voucher Program.* A separate application must be submitted for Category 1 and Category 2 if the PHA wants to request HCVs under both categories. When completing this form, only complete the box for total dwelling units under vouchers in section B. Do not complete sections A or C. In section D of the form, the PHA applicant must provide the following information:

a. The category of funding (Category 1 or Category 2).

b. The number of authorized baseline HCV units.

c. The number of HCVs requested.

d. The minimum number of vouchers the PHA is willing to accept under this category if selected under a lottery system.

e. To demonstrate PHA experience:

(1) At least 20 percent of the PHA's HCVs are used by non-elderly disabled families as reflected in PIC for the end of the month prior to the submission date; or

(2) The PHA has a preference on its waiting list for non-elderly disabled families as recorded in its administrative plan as documented by that section of the administrative plan attached to the application; or

(3) The PHA has been previously funded for one of the following special purpose voucher allocations: Rental Assistance for Non-Elderly Persons with Disabilities in Support of Designated Housing Plans; Rental Assistance for Non-Elderly Persons with Disabilities Related to Certain Types of Section 8 Project-Based Developments; Mainstream Housing Opportunities for Persons with Disabilities and the Project Access Pilot Program.

f. To demonstrate that the applicant PHA has resources for supportive services for non-elderly disabled families, the applicant PHA must describe those resources in full detail in this section. In addition, for Category 2, the PHA must identify the partnering resource agency and describe the provision of supportive services for a transitioned person. The PHA must also specify the number of vouchers that the partnering resource agency is projecting will be needed to assist transitioning individuals over a 12-month period. The number of vouchers requested by the PHA under Category 2 may not exceed this number.

Supportive services for Category 2 vouchers must include the provision of care/case management, in addition to the needed health and social services. These services are usually funded through the State Medicaid program and provided by local home care agencies. In 29 States and the District of Columbia, the Medicaid programs have been awarded demonstration funds from the U.S. Department of Health and Human Services (HHS) to provide the needed supportive services a transitioned person needs to live safely and as independently as possible in the community (the Money follows the Person (MFP) demonstration). For a person who is transitioning under this demonstration, the contact partnering resource agency is the MFP program within the State Medicaid program. More information on MFP can be found at *http://www.cms.hhs.gov/DeficitReductionAct/20_MFP.asp.* All persons that are transitioning as a MFP participant are guaranteed to receive the needed health and social services. Therefore, the only resource documentation that is needed in these instances is evidence of MFP participation by the partnering resource agency.

For PHAs located in States not participating in the MFP demonstration, the PHA should contact the State Medicaid Program to determine if similar supportive services and individual referrals will be made available for these Category 2 vouchers. A PHA that is not located in a State participating in the MFP demonstration must describe the resources that will be made available to the transitioning individual by the partnering resource agency if the PHA is applying for voucher funding under Category 2.

During the 60-day preparation period for submission of this NOFA, HUD in collaboration with the U.S. Department of Health and Human Services will provide information, outreach and technical assistance to PHAs interested in applying for Category 2 vouchers.

3. Form HUD–2880, *Applicant/Recipient Disclosure/Update Report;*

4. Form HUD–2993, *Acknowledgment of Application Receipt only required if paper application;*

5. Form HUD–2991, *Certification of Consistency with the Consolidated Plan,* or a copy of the signed PHA Certification of Compliance for its current Annual PHA Plan; and

6. SF–LLL, *Disclosure of Lobbying Activities,* if applicable.

7. You Are Our Client Grant Application Survey (HUD–2994–A) (Optional); and

8. HUD Facsimile Transmittal (HUD–96011, Third Party Documentation Facsimile Transmittal).

C. Receipt Instructions

Applications under this NOFA must be received electronically through the Federal Web site Grants.gov, unless a waiver of this requirement is granted in accordance with the instructions below. The procedures for electronic submission of applications published in HUD's General Section on December 29, 2008 (73 FR 79548) including the provisions at Section IV.C., entitled ''Receipt Dates and Times,'' removed by HUD's Amendment to the General Section published on April 16, 2009 (74 FR 17685) are reinstated and apply to this NOFA. Applicants must follow the instructions on the December 29, 2008 General Section, unless a waiver for cause in accordance with HUD's waiver policy of 24 CFR 5.1005, to the electronic application requirements is approved by HUD. Applicants requesting a waiver should submit their waiver requests in writing using e-mail or fax. Waiver requests must be submitted no later than 15 days prior to

the application deadline date and must be submitted in writing or by e-mail to Phyllis A. Smelkinson, Housing Program Specialist, Housing Voucher Management, Office of Public and Indian Housing, U.S. Department of Housing and Urban Development, 451 7th Street, SW., Washington, DC 20410. You can e-mail requests to Ms. Smelkinson at *Phyllis.A.Smelkinson@hud.gov*. The subject line of the e-mail message should be (insert applicant name) FY09 Rental Assistance for Non-Elderly Persons with Disabilities Waiver Request. If an applicant is granted a waiver, then the approval will provide instructions for submitting paper copies to the appropriate HUD office. All paper applications must be received by the application deadline date to meet the requirements for timely receipt.

Paper applications will not be accepted from applicants that have not been granted a waiver. If an applicant is granted a waiver, the approval notice will provide instructions for submission. All applications in paper format must have received a waiver to the electronic application requirement and the application must be received by HUD on or before the application deadline date.

1. The application deadline for receipt of HUD applications via Grants.gov is 11:59:59 p.m. on XXXX, 2009. Applications must be received by Grants.gov by the deadline in order to meet the program deadline. Received means that the application has been successfully uploaded to the Grants.gov server and the applicant has received confirmation of successful submission to Grants.gov. Applicants should be aware that hitting the ''sign and submit'' button to transmit the application does not mean the application has been successfully uploaded to Grants.gov. Only when the upload is complete is the application date and time stamped by the Grants.gov system. An application that has been rejected by Grants.gov is not deemed to have been received by Grants.gov. (Please see Section D.1. of the General Section for a detailed explanation of Timely Receipt Requirements and Proof of Timely Receipt.) As in the past, HUD encourages applicants to submit their applications early and with sufficient time to address any issues that might affect the applicant's ability to have an application successfully uploaded and received by Grants.gov.

In FY 2009, HUD is establishing a one-day grace period from the date of notification of a rejection from Grants.gov, to allow applicants that successfully upload an application to Grants.gov prior to the deadline date and time, but receive a rejection notice after the deadline date and time, to cure the reason for rejection and re-upload the application to Grants.gov. The paragraphs below describe HUD's Grace Period Policy for FY2009.

a. Applicants that have successfully uploaded their application to Grants.gov prior to the deadline, and subsequently receive a rejection notice from Grants.gov after the deadline date and time, will have a one-day grace period from the date stamp on the first Grants.gov rejection notice after the deadline, to cure the basis for the rejection and upload an application that corrects the problems cited in the rejection notice. Applicants can upload the application as many times as needed to cure noted deficiencies within the one-day grace period. The Grants.gov rejection notice identifies the reasons why the application was rejected. Applicants that do not understand the error messages received in the rejection notice should immediately contact the Grants.gov Help Desk so they can get assistance in clearing the problem. Generally, Grants.gov will reject an application because it contains an incorrect DUNS number or a DUNS number that does not match the AOR's registration, the application was submitted by an individual without proper authorization as the AOR, and/or the application contains file names that trigger a ''VirusDetect'' message. The grace period ends one day after the date stamp on the first rejection notice received after the deadline date.

Warning: Applications that contain file names which are longer than 50 characters (HUD recommends using file names with 32 characters or less), or contain spaces or special characters, will result in the file being detected as a virus by the Grants.gov system and the application will be rejected with a ''VirusDetect'' message. In FY2008, the use of spaces and special characters in file names, and the use of file names which were longer than fifty characters, resulted in the most instances of an applicant receiving a ''VirusDetect'' rejection. Applicants should also scan files for viruses because the Grants.gov system will also reject files with viruses.

Applications received by Grants.gov, including those received during the grace period, must be validated by Grants.gov to be rated or ranked or receive funding consideration by HUD. HUD will use the date and time stamp on the Grants.gov system to determine dates when the grace period begins and ends.

b. Applications uploaded to Grants.gov after the deadline date under the following circumstances do not qualify for the grace period and will not be considered for funding:

(1) Applications uploaded and received by Grants.gov after the deadline date and time for which there is no prior rejection notice in the Grants.gov system logs will be considered late and will not be rated and ranked or receive funding consideration. Failure to successfully upload the application to Grants.gov by the deadline date and time does not qualify for the grace period as described above.

(2) Applications receiving a rejection notice due to the funding opportunity being closed will not be provided the one day grace period to correct the ''opportunity closed'' deficiency or any other basis for rejection because the applicant missed the deadline date and time and therefore does not qualify for the grace period as described above.

(3) If an application is uploaded during the grace period and is subsequently rejected after the grace period ends, the applicant will not be afforded additional time to correct the deficiency(ies) noted in the rejection notice.

c. The grace period ends at 11:59:59 p.m. one day from the date stamp on the first rejection notice issued by the Grants.gov system to the e-mail address provided in the Grants.gov registration. Applicants must ensure that their e-mail notification address contained in the Grants.gov registration is up-to-date. Neither HUD nor Grants.gov will be responsible if e-mail messages are not received at the address listed in the registration process. Applicants must also ensure that their e-mail systems will accept messages from Grants.gov. Applicants are responsible for monitoring their e-mail messages. Messages from Grants.gov come from *Support@grants.gov*.

d. The only exceptions to HUD's grace period policy are:

(1) The Grants.gov system is down and not available to applicants for at least 24 hours prior to the deadline date, or the system is down for 24 hours or longer, impacting the ability of applicants to cure a submission deficiency within the grace period; and/or

(2) There is a presidentially declared disaster in the applicant's area. In the event of either or both of these events, HUD will publish a notice extending the deadline or cure period, for applicants affected, as appropriate.

e. Busy servers or slow processing are not the basis for HUD to extend the deadline dates or the grace period.

Applicants are advised to monitor the Grants.gov system using the Grants.gov blog at *http://grants-gov.blogspot.com/*. The Grants.gov blog provides information on server capacity, traffic on the Grants.gov site, and other Federal grant closings each day. Applicants should monitor the site and take into account the amount of traffic on the site when applying.

2. An applicant will not be provided additional opportunities to correct rejection errors if an application is rejected after the one-day grace period has expired.

As with any electronic system, applicants may experience issues when attempting to submit their application which does not permit the uploading of the application to Grants.gov. Such issues can be due to firewall and virus protection software that the applicant has placed on their system or network; proxy and cache settings; Internet traffic; limitation on the size of the files attempting to be transmitted established at the applicant's site or by the applicant's Internet provider; Grants.gov servers experiencing busy traffic; or any number of issues. Therefore, HUD strongly advises applicants to submit their applications at least 48 hours prior to the deadline and when the Grants.gov Help Desk is open so that assistance can be provided. Assistance may require diagnosing an applicant's particular issues. An applicant that does not follow HUD's advice increases the applicant's risk of not being able to meet the timely receipt requirements. A submission attempt less than the recommended 48 hours before the deadline does not allow the time needed to research the reason for the problem or to work with the applicant in overcoming the uploading difficulty. Similarly, attempting to submit within 24 hours of the deadline or when the Grants.gov Help Desk is closed does not allow the time needed for Grants.gov or HUD to provide the needed assistance. In addition, HUD staff cannot provide assistance or contact Grants.gov on your behalf after the Help Desk is closed. HUD strongly encourages applicants to carefully read the December 29, 2008 General Section for additional information regarding the Grants.gov registration process, submitting an application through Grants.gov, and timely receipt instructions. HUD also encourages applicants to submit their applications early with sufficient time to address issues that might prevent their applications from being received by Grants.gov.

Applicants should also note that Adobe has put out new versions of Adobe Reader compatible with Grants.gov. These versions are 8.1.5 and 9.1.1. Applicants must use the latest versions of the Adobe Reader compatible with Grants.gov, which are Adobe Reader 8.1.5 or 9.1.1.

D. Intergovernmental Review

This NOFA is not subject to Executive Order 12372, Intergovernmental Review of Federal Programs.

E. Funding Restrictions

Funds under this NOFA may only be used for housing assistance for eligible participants and may not be used for performance of routine HCV program functions that are reimbursed through HCV administrative fees.

V. Application Review Information

A. Criteria

1. Factors Used to Evaluate and Rate Applications

None.

B. Review and Selection Process

1. Technically Acceptable Applications

All technically acceptable applications that meet the threshold criteria of section III.C.2. above will be funded to the extent funds are available.

a. Funding Priority Categories

None.

b. Order of Funding

If funding under this NOFA is not available to fund all applications received by the NOFA deadline in each category, a lottery will be used until all funding is exhausted. If funding remains in either category, it will be used to fund the other category in lottery order.

c. Insufficient Funds

Not applicable.

2. Corrections to Deficient Applications

The Grants Management Center (GMC) may contact an applicant to clarify an item in its application or to correct a curable technical deficiency. Please note that clarifications or corrections of technical deficiencies in accordance with the information provided by HUD to the applicant must be submitted within 14 calendar days of the date of receipt of the HUD notification.

3. Unacceptable Applications

After the technical deficiency correction period (as provided in the General Section), the HUD GMC will disapprove PHA applications that it determines are not acceptable for processing. Applications from PHAs that fall into any of the following categories are ineligible for funding under this NOFA and will not be processed:

a. Any PHA that does not meet the threshold requirements of the General Section.

b. Any PHA that does not meet the threshold requirements of Section III.C.2. of this NOFA.

c. A PHA whose application does not comply with the requirements of this NOFA after the expiration of the 14-calendar day technical deficiency correction period;

d. A PHA whose application was received at grants.gov after the application deadline date; or

e. A PHA whose paper application that was approved for a waiver of the electronic application requirement was not received at the official place of receipt.

VI. Award Administration Information

A. Award Notices

Successful applicants in each category will receive an award letter from HUD. Funding will be provided to successful applicants as an amendment to the Annual Contributions Contract (ACC) of the applicant PHA.

Unsuccessful applicants will receive a notification of rejection letter from the GMC that will state the basis for the decision. The applicant may request an applicant debriefing. Beginning not less than 30 days after the awards for assistance are announced publicly, upon receiving a written request, HUD will provide a debriefing to the requesting applicant. See the General Section for additional information regarding a debriefing. Applicants requesting to be debriefed must send a written request to: Keia Neal, Acting Director, Grants Management Center at the e-mail address in Overview, Section F.

B. Administrative and National Policy Requirements

1. HUD's Strategic Goals

HUD is committed to ensuring that programs result in the achievement of HUD's strategic mission. HCVs awarded under this NOFA support the Department's strategic goals of: (1) Increasing homeownership opportunities, and (2) promoting decent, affordable housing by expanding access to these opportunities for non-elderly persons with disabilities. For more information about HUD's Strategic Plan and Annual Performance Plan, you may visit HUD's Web site at *http://www.hud.gov/offices/cfo/reports/cforept.cfm*.

C. Reporting

Successful applicants (including MTW agencies) must report the usage of

voucher funds under this NOFA through required submissions of the form HUD–50058, *Family Report.* PHAs must enter the program code ''NED'' on line 2n of the HUD–50058 for non-elderly families served under this NOFA and ''NHT'' for those non-elderly families transitioning from nursing homes and other institutions into the community. PHAs must maintain these codes for the duration of the family's participation in the HCV program. HUD's assessment of PHA compliance under this NOFA will be based on PIC system data.

VII. Agency Contacts

A. For Technical Assistance

See **FOR FURTHER INFORMATION CONTACT** above or you may contact the Public and Indian Housing Resource Center at 1–800–955–2232. Persons with hearing or speech impairments may access this number via TTY (text telephone) by calling the Federal Information Relay Service at 1–800–877–8339. (These are toll-free numbers). Prior to the application deadline, staff at the numbers given above, will be available to provide general guidance, but not guidance in actually preparing the application. Following selection, but prior to award, HUD staff will be available to assist in clarifying or confirming information that is a prerequisite to the offer of an award by HUD.

B. Technical Corrections to the NOFA

Technical corrections to this NOFA will be published in the **Federal Register** which the applicant is responsible for monitoring.

VIII. Other Information

A. References

The following are hereby incorporated by reference:

1. Executive Order 13132, Federalism;
2. Public Access, Documentation, and Disclosure;
3. Section 103 of the HUD Reform Act.

B. Paperwork Reduction Act

The information collection requirements contained in this document have been approved by the Office of Management and Budget (OMB) under the Paperwork Reduction Act (PRA) of 1995 (44 U.S.C. 3501–3520) and assigned OMB control numbers 2577–0169 and 2577–0083. In accordance with the PRA, HUD may not conduct or sponsor, and a person is not required to respond to, a collection of information unless the collection displays a currently valid OMB control number.

C. Environmental Impact

This NOFA provides funding under, and does not alter the environmental requirements of 24 CFR part 982. Accordingly, under 24 CFR Section 50.19(c)(5), the NOFA is categorically excluded from environmental review under the National Environmental Policy Act of 1969 (42 U.S.C. 4321). For environmental review of activities funded under this NOFA, *see* requirements described in section III.C.4 above.

Dated: June 17, 2009.

Paula O. Blunt,

General Deputy Assistant, Secretary for Public and Indian Housing.

[FR Doc. E9–14651 Filed 6–19–09; 8:45 am]

BILLING CODE 4210–67–P

DEPARTMENT OF HOUSING AND URBAN DEVELOPMENT

[Docket No. FR–5300–N–09]

Notice of Availability: Notice of Funding Availability (NOFA) for HUD's Fiscal Year (FY) 2009 Public and Indian Housing Family Self-Sufficiency Program under the Resident Opportunity and Self-Sufficiency (ROSS) Program

AGENCY: Office of the Assistant Secretary for Public and Indian Housing, HUD.

ACTION: Notice.

SUMMARY: HUD announces the availability on its Web site of the application information, submission deadlines, funding criteria, and other requirements for the FY2009 Public and Indian Housing Family Self-Sufficiency Program under the Resident Opportunity and Self-Sufficiency (ROSS) Program. The NOFA makes approximately $12 million available under the Department of Housing and Urban Development Appropriations Act 2009 (Pub. L. 111–8, approved March 11, 2009). Applicants for assistance under this NOFA must address applicable requirements in the Notice of HUD's Fiscal Year 2009 Notice of Funding Availability (NOFA) Policy Requirements and General Section to the HUD's FY2009 NOFAs for Discretionary Programs (General Section) published on December 29, 2008 (73 FR 79548), as amended on April 16, 2009 (74 FR 17685). Applicants should take particular note that they should follow the application submission instructions contained in this NOFA and not use those in the General Section. The notice providing information regarding the application process, funding criteria and eligibility requirements is available on the HUD Web site at *http://www.hud.gov/offices/adm/grants/fundsavail.cfm.*

FOR FURTHER INFORMATION CONTACT: For information concerning the Public and Indian Housing Family Self-Sufficiency Program under the Resident Opportunity and Self-Sufficiency (ROSS) Program, contact Anice Schervish, Urban Revitalization Division, Office of Public and Indian Housing, Department of Housing and Urban Development, 451 Seventh Street, SW., Room 3236, Washington DC 20410; telephone number 202–402–2341 (this is not a toll-free number). Persons with speech or hearing impairments may access this telephone number via TTY by calling the toll-free Federal Information Relay Service during working hours at 800–877–8339.

Dated: June 8, 2009.

Paula O. Blunt,

General Deputy Assistant Secretary for Public and Indian Housing.

[FR Doc. E9–14633 Filed 6–19–09; 8:45 am]

BILLING CODE 4210–67–P

DEPARTMENT OF HOUSING AND URBAN DEVELOPMENT

[Docket No. FR–5300–N–02]

Notice of Availability: Notice of Funding Availability (NOFA) for HUD's Fiscal Year (FY) 2009 Housing Counseling Program

AGENCY: Office of the Assistant Secretary for Housing—Federal Housing Commissioner, HUD.

ACTION: Notice.

SUMMARY: HUD announces the availability on its Web site of the applicant information, submission deadlines, funding criteria and other requirements for HUD's Housing Counseling Program NOFA for FY2009. Approximately $58 million appropriated under the Department of Housing and Urban Development Appropriations Act, 2009 (Pub. L. 111–8, approved March 11, 2009) for HUD's Housing Counseling Program is available through this NOFA. Applicants for HUD's Housing Counseling Program must address the requirements established by HUD's Fiscal Year 2009 Notice of Funding Availability (NOFA) Policy Requirements and General Section to HUD's FY2009 NOFAs for Discretionary Programs (General Section) published

on December 29, 2008 (73 FR 79548), as amended April 16, 2009 (74 FR 17685). Applicants should take particular note that they must follow the application instructions contained in the FY2009 Housing Counseling NOFA and not use those in the General Section. The notice providing information regarding the application process, funding criteria and eligibility requirements is available on the HUD Web site at *http://www.hud.gov/offices/adm/grants/fundsavail.cfm.*

FOR FURTHER INFORMATION CONTACT: Questions regarding specific program requirements should be directed to the agency contact identified in the program NOFA. Questions regarding the 2009 General Section should be directed to the Office of Departmental Grants Management and Oversight at 202–708–0667 (this is not a toll-free number) or the NOFA Information Center at 1–800–HUD–8929 (toll-free). Persons with hearing or speech impairments may access these numbers via TTY by calling the Federal Information Relay Service at 1–800–877–8339.

Dated: June 12, 2009.

Brian D. Montgomery,

Assistant Secretary for Housing—Federal Housing Commissioner.

[FR Doc. E9–14628 Filed 6–19–09; 8:45 am]

BILLING CODE 4210–67–P

DEPARTMENT OF THE INTERIOR

Office of Surface Mining Reclamation and Enforcement

Notice of Proposed Information Collection for 1029–0094

AGENCY: Office of Surface Mining Reclamation and Enforcement.

ACTION: Notice and request for comments.

SUMMARY: In compliance with the Paperwork Reduction Act of 1995, the Office of Surface Mining Reclamation and Enforcement (OSM) is announcing its intention to seek the Office of Management and Budget (OMB) approval to continue the collection of information for 30 CFR part 700—General. This information collection activity was previously approved by OMB and assigned clearance number 1029–0094. We may not conduct or sponsor, and a person is not required to respond to, a collection of information unless it displays a currently valid OMB control number.

DATES: Comments on the proposed information collection must be received by August 21, 2009, to be assured of consideration.

ADDRESSES: Comments may be mailed to John Trelease, Office of Surface Mining Reclamation and Enforcement, 1951 Constitution Ave, NW., Room 202—SIB, Washington, DC 20240. Comments may also be submitted electronically to *jtrelease@osmre.gov.*

FOR FURTHER INFORMATION CONTACT: To request additional information about this collection of information, contact John Trelease, at (202) 208–2783 or by e-mail listed previously.

SUPPLEMENTARY INFORMATION: OMB regulations at 5 CFR part 1320, implementing provisions of the Paperwork Reduction Act of 1995 (Pub. L. 104–13), require that interested members of the public and affected agencies have an opportunity to comment on information collection and recordkeeping activities [see 5 CFR 1320.8 (d)]. This notice identifies an information collection that OSM will be submitting to OMB for approval, the collection contained in 30 CFR part 700, General (1029–0094). OSM will seek a 3-year term of approval for this information collection activity.

Comments are invited on: (1) The need for the collection of information for the performance of the functions of the agency; (2) the accuracy of the agency's burden estimates; (3) ways to enhance the quality, utility and clarity of the information collection; and (4) ways to minimize the information collection burden on respondents, such as use of automated means of collection of the information. A summary of the public comments will accompany OSMs submission of the information collection requests to OMB.

Before including your address, phone number, e-mail address, or other personal identifying information in your comment, you should be aware that your entire comment-including your personal identifying information-may be made publicly available at any time. While you can ask us in your comment to withhold your personal identifying information from public review, we cannot guarantee that we will be able to do so.

The following information is provided for the information collection: (1) title of the information collection; (2) OMB control number; (3) summary of the information collection activity; and (4) frequency of collection, description of the respondents, estimated total annual responses, and the total annual reporting and recordkeeping burden for the collection of information.

Title: 30 CFR Part 700—General.

OMB Control Number: 1029–0094.

Summary: This Part establishes procedures and requirements for terminating jurisdiction of surface coal mining and reclamation operations, petitions for rulemaking, and citizen suits filed under the Surface Mining Control and Reclamation Act of 1977.

Bureau Form Number: None.

Frequency of Collection: Once.

Description of Respondents: State and tribal regulatory authorities, private citizens and citizen groups, and surface coal mining companies.

Total Annual Responses: 3.

Total Annual Burden Hours: 24.

Dated: June 16, 2009.

Alfred E. Whitehouse,

Acting Chief, Division of Regulatory Support.

[FR Doc. E9–14461 Filed 6–19–09; 8:45 am]

BILLING CODE 4310–05–M

DEPARTMENT OF THE INTERIOR

Fish and Wildlife Service

[FWS–R4–R–2009–N0094; 40136–1265–0000–S3]

Bond Swamp National Wildlife Refuge, Bibb and Twiggs Counties, GA

AGENCY: Fish and Wildlife Service, Interior.

ACTION: Notice of availability: draft comprehensive conservation plan and environmental assessment; request for comments.

SUMMARY: We, the U.S. Fish and Wildlife Service (Service), announce the availability of a draft comprehensive conservation plan and environmental assessment (Draft CCP/EA) for Bond Swamp National Wildlife Refuge (NWR) for public review and comment. In this Draft CCP/EA, we describe the alternative we propose to use to manage this refuge for the 15 years following approval of the final CCP.

DATES: To ensure consideration, we must receive your written comments by July 22, 2009.

ADDRESSES: Send comments, questions, and requests for information to: Ms. Carolyn Johnson, Assistant Refuge Manager, Piedmont and Bond Swamp NWRs, 718 Juliette Road, Hillsboro, GA 31038. The Draft CCP/EA is available on compact disk or in hard copy. The Draft CCP/EA may also be accessed and downloaded from the Service's Internet Site: *http://southeast.fws.gov/planning.*

FOR FURTHER INFORMATION CONTACT: Ms. Carolyn Johnson; telephone: 478/986–5441; e-mail: *Piedmont@fws.gov.*

SUPPLEMENTARY INFORMATION:

Introduction

With this notice, we continue the CCP process for Bond Swamp NWR. We started the process through a notice in the **Federal Register** on May 16, 2007 (72 FR 27586).

Background

The National Wildlife Refuge System Improvement Act of 1997 (16 U.S.C. 668dd–668ee) (Improvement Act), which amended the National Wildlife Refuge System Administration Act of 1966, requires us to develop a CCP for each national wildlife refuge. The purpose for developing a CCP is to provide refuge managers with a 15-year strategy for achieving refuge purposes and contributing toward the mission of the National Wildlife Refuge System, consistent with sound principles of fish and wildlife management, conservation, legal mandates, and our policies. In addition to outlining broad management direction on conserving wildlife and their habitats, CCPs identify wildlife-dependent recreational opportunities available to the public, including opportunities for hunting, fishing, wildlife observation, wildlife photography, and environmental education and interpretation. We will review and update the CCP at least every 15 years in accordance with the Improvement Act.

Bond Swamp NWR was established on October 16, 1989 to protect, maintain, and enhance the ecosystem of the Ocmulgee River floodplain. The refuge did not open for public use until 1999. The original land was purchased through cooperative efforts of the Service and The Nature Conservancy. Currently, Bond Swamp NWR consists of approximately 7,348 acres. We own 6,276 acres in fee title, and we manage an additional 1,072 acres through an agreement with the State of Georgia. Within this agreement, we also manage Brown's Mount, a historic/cultural site that encompasses 165 acres of upland forest. An expansion proposal in 1999 established the present acquisition boundary, extending from the current refuge boundaries to the north, west, and especially south. The approved acquisition area includes portions of Bibb and Twiggs Counties, Georgia, and encompasses approximately 18,000 acres of bottomland and adjacent upland habitats along the Ocmulgee River, representative of those already managed.

Significant issues addressed in the Draft CCP/EA include: wildlife management, habitat management, feral hog removal, land acquisition, public access, hunting, staffing, and funding.

CCP Alternatives, Including Our Proposed Alternative

We developed three alternatives for managing the refuge and chose Alternative C as the proposed alternative. A full description of each alternative is in the Draft CCP/EA. We summarize each alternative below.

Alternative A—No Action Alternative

Bond Swamp NWR would continue to be managed as it is at present—there would be no change to refuge management. We would continue to provide a minimum of 4,000 acres of winter flooded bottomland forest habitat for wintering waterfowl. There would be no active effort to inventory wintering waterfowl populations. Wood ducks would not be banded. Wetlands would not be managed for waterfowl habitat enhancement. There would be no management of forest-dependent landbirds. Active colonial nesting waterbird rookeries would continue to be protected from human disturbance. No active management of amphibians and reptiles would occur. Neither black bear nor bat surveys would be conducted. With regard to managing species of concern, we would continue to provide a buffer zone around the existing bald eagle nest on Stone Creek. To control invasive animals, there would be limited feral hog hunting, with a harvest of 50–200 hogs per year.

There would be no active forest management. We would continue to implement the current Fire Management Plan that calls for suppression as the only appropriate management response. There would be no active management of open water or wetlands. Invasive plant species would not be actively controlled. No active management of roadsides and rights-of-way would occur.

We would continue to comply with Section 106 of the National Historic Preservation Act, but there would be no additional active cultural resources management. Cooperation with the Muscogee Creek Nation in management and protection of Traditional Cultural Properties would continue.

Under Alternative A, we would continue to share law enforcement officers with Piedmont NWR, with approximately 700 hours annually dedicated to Bond Swamp NWR for patrols, trespass and cultural resources enforcement, and hunting/fishing compliance checks. With regard to managing environmental contamination, we would continue to cooperate with State and Federal authorities in periodic surveys of water quality and contaminant levels in water, sediments, and fish tissues. With regard to hydrologic function, input to the Ecological Services Office in Athens, Georgia, on Section 404 permit applications would continue to be provided. We would also continue to pursue opportunities for land acquisition as they occur within the approved acquisition boundary, but at a low rate.

Under Alternative A, we would continue to serve the public with a Hunt Plan and Law Enforcement Plan, but without a Visitor Services Plan. We would continue to operate with current levels of contact facilities and information, such as signage, parking lots, kiosks, and trails. Existing vehicular access would be maintained via State and county roads on the east side of the refuge; there would be no public access on the west side of the refuge. Public access by boat would continue to be limited.

The priority public recreational uses of the National Wildlife Refuge System (e.g., hunting, fishing, wildlife observation, wildlife photography, and environmental education and interpretation) would continue at Bond Swamp NWR under Alternative A. A non-quota, 23-day archery deer and hog hunt, and a 36-day hog-only firearm hunt would continue to be provided every fall. Limited bank fishing on the east side of the refuge would continue from March 15–October 15. Wildlife observation and photography along the Beaver Swamp and Longleaf Pine Trails would be allowed. Brown's Mount would remain closed to all public access. Very limited environmental education and interpretation would continue on- and off-refuge. We would continue to provide news releases about refuge events and phenomena as appropriate.

The refuge operations specialist position assigned to Bond Swamp NWR, based out of Piedmont NWR, would be abolished. We would continue to partner with the Georgia Department of Natural Resources, the Georgia Forestry Commission, and the Muscogee Creek Nation on refuge and cultural management questions. No volunteers would be used. Bond Swamp NWR would continue to be administered from Piedmont NWR. Limited facilities would be maintained and maintenance would be conducted, using Piedmont NWR's equipment.

Alternative B—Custodian Management

The focus of Alternative B would be custodial management in which we would cease all active management of upland and wetland habitats at Bond Swamp NWR, employing ''passive

management'' instead. Management of fish and wildlife populations would be identical to Alternative A. We would continue to provide a minimum of 4,000 acres of winter flooded bottomland forest habitat for wintering waterfowl. There would be no active effort to inventory or census wintering waterfowl populations. Wood ducks would not be banded. Wetlands would not be managed for waterfowl habitat enhancement. There would be no management of forest-dependent landbirds. Active colonial nesting waterbird rookeries would continue to be protected from human disturbance. No active management of amphibians and reptiles would occur. Neither black bear nor bat surveys would be conducted. With regard to managing species of concern, we would continue to provide a buffer zone around the existing bald eagle nest on Stone Creek. With regard to controlling invasive animals, there would be continued limited feral hog hunting with a harvest of 50–200 hogs per year.

Habitat management would be identical as under Alternative A. There would be no active forest management. We would continue implementing the current Fire Management Plan, which calls for suppression as the only appropriate management response. There would be no active management of open water or wetlands. Invasive plant species would not be actively controlled. No active management of clearings and rights-of-way would occur.

As under Alternative A, we would continue to comply with Section 106 of the National Historic Preservation Act, but there would be no additional active cultural resources management. Cooperation with the Muscogee Creek Nation in management and protection of Traditional Cultural Properties would continue.

Alternative B would reduce the hours of the law enforcement officer from Alternative A, and focus would be on trespass and cultural resources enforcement. Managing environmental contamination would be identical to Alternative A; we would continue to cooperate with State and Federal authorities in periodic surveys of water quality and contaminant levels in water, sediments, and fish tissues. With regard to hydrologic function, we would continue to provide input to Ecological Services, but at a reduced level. There would be no additional land acquisition over the life of the CCP.

We would continue to operate with only a Law Enforcement Plan and a Hunt Plan, but no Visitor Services Plan. The refuge would continue to be open to the public, with no maintained facilities. With regard to access, foot travel would be invited but no trails, trailheads, or roads would be maintained.

The priority public recreational uses of the National Wildlife Refuge System would continue in a limited way or be eliminated altogether at Bond Swamp NWR under Alternative B. Hunting would be the same as in Alternative A—non-quota, 23-day archery deer and hog hunts, and a 36-day hog-only firearm hunt would continue to be provided every fall—or administration of hunts would be offered to the Georgia Department of Natural Resources. Fishing would be the same as under Alternative A—limited bank fishing on the east side of the refuge would continue from March 15–October 15. Trails would cease to be maintained, but visitors could still view and photograph wildlife opportunistically throughout the refuge. Environmental/cultural education and interpretive programs would be eliminated, and there would be no outreach.

With regard to staffing, there would be no dedicated full-time positions for Bond Swamp NWR. As under Alternative A, we would continue to partner with the Georgia Department of Natural Resources, the Georgia Forestry Commission, and the Muscogee Creek Nation on refuge and cultural management questions. No volunteers would be used. Bond Swamp NWR would continue to be administered from Piedmont NWR.

Alternative C—Enhanced Biological/Visitor Service (Proposed Alternative)

Alternative C would emphasize enhanced biological programs and visitor services. Alternative C would increase our contribution to the Atlantic Coast Joint Venture (ACJV) of the North American Waterfowl Management Plan by adding 1,000 acres of winter flooded bottomland forest habitat through acquisition for management of wintering waterfowl. The mid-winter waterfowl survey would be reinstated in cooperation with the Georgia Department of Natural Resources. Fifty wood ducks would be annually banded between July 1 and September 20. Within 5 years of CCP approval, sites within the ACJV focus areas conducive to waterfowl habitat enhancement and feasible types of manipulation would be identified. For the duration of the CCP, within the context of forest planning, priority landbirds (e.g., species of concern from Partners in Flight) would be considered when implementing silvicultural treatments. Colonial nesting waterbirds would be managed the same as under Alternative A—active rookeries would continue to be protected from human disturbance. In addition, rookery sites would be incorporated in forest management planning to protect active nesting areas during forestry operations. Rookeries would be actively improved by providing platforms and/or natural structures.

Within 10 years of CCP approval, baseline surveys of reptiles and amphibians would be conducted, using a variety of techniques. Alligator surveys would be conducted in conjunction with the State. Within 5 years of CCP approval, we would cooperate with the Georgia Department of Natural Resources to conduct annual surveys of black bears on the refuge, contributing to our knowledge of central Georgia bear population. Within 5 years of CCP approval, the diversity and relative occurrence of bats would be documented through use of proper inventory and survey methods. Within 5 years of CCP approval, and on a regular basis subsequently, periodic targeted surveys for listed species of plants and animals would be conducted in cooperation with partners. We would implement a feral hog management plan within 1 year of CCP approval, resulting in increased hog harvest.

Within 10 years of CCP approval, the desired future conditions for habitats of Bond Swamp NWR would be defined and a Forest Management Plan would be developed. This would include appropriate forest inventory and silvicultural treatments deemed necessary for attaining desired future conditions and improving forest habitats for migratory birds, threatened and endangered species, and other trust resources. A new Fire Management Plan would be developed within 10 years of CCP approval that may allow for prescribed fire for habitat improvement.

Within 10 years of CCP approval, we would inventory and identify potential sites for establishment of greentree reservoirs to benefit wintering waterfowl in open water/wetland areas. Within 5 years of CCP approval, an Integrated Pest Management Plan would be prepared that would identify, inventory, prioritize, and suggest appropriate control methods. We would collaborate with the Georgia Power Company to maintain open habitats within rights-of-way to benefit butterflies and certain bird species (e.g., indigo buntings and blue grosbeaks). Opening the forest canopy beside some road segments in the refuge road system to increase understory structure would be considered.

As under Alternative A, we would continue to comply with Section 106 of the National Historic Preservation Act, but there would be no additional active cultural resources management. Cooperation with the Muscogee Creek Nation in management and protection of Traditional Cultural Properties would continue. Additionally, within 10 years of CCP approval, a Phase I cultural resources survey of the refuge would be implemented, and within 15 years of CCP approval, the refuge would develop and begin to implement an Integrated Cultural Resources Management Plan.

A law enforcement officer would be added for Bond Swamp NWR, working 2,080 hours per year in boundary work, public safety, and cultural resources identification and protection. This would be in addition to the same tasks as identified under Alternative A—patrols, trespass and cultural resources enforcement, and hunting/fishing compliance checks.

For the duration of the CCP, we would cooperate with State and local government agencies and non-governmental organizations to characterize status of refuge waters and fish species with regard to environmental contamination issues, such as presence and levels of toxins. Fish consumption advisories would be posted as appropriate. With regard to hydrologic function, as under Alternative A, input to the Service's Ecological Services Office in Athens, Georgia, on Section 404 permit applications would continue to be provided. Additionally, communication with the Ecological Services Office would be improved to provide more effective input and to safeguard the refuge's interests. Partnerships and funding would be pursued to obtain a North American Wetland Conservation Act grant through the ACJV to increase land acquisition within the refuge boundary.

Within 3 years of CCP approval, a Visitor Services Plan would be prepared and implemented to provide overall management guidance for public use on the refuge. We would work with State and county partners to improve directional signage, kiosks, and parking lots. Within the 15-year life of the CCP, access on the east side would be improved by working with the Georgia Department of Transportation and the Federal Highway Administration to install turning lanes at entrances, improve Stone Creek Road, and provide boat and canoe/kayak access to Stone Creek. Vehicular access on the west side of the refuge would be opened by locating a right-of-way. We also would work with the Georgia Department of Natural Resources to locate a boat ramp along the Ocmulgee River.

The priority public recreational uses of the National Wildlife Refuge System would continue at Bond Swamp NWR under Alternative C. Within 5 years of settlement of a lawsuit against the Service, which is now being litigated, we would maintain or expand existing hunts and add small game, wild turkey, and waterfowl hunts. The west side of the refuge would be opened to hunting, once access is provided.

Within 3–5 years of CCP approval, fishing opportunities would be improved through increased access on the east and west sides of the refuge. At primary parking and boat launch areas, health advisories related to consuming fish would be posted. We would work with the Georgia Department of Natural Resources to consider methods for controlling flathead catfish.

Within 10 years of CCP approval, a canoe trail on Stone Creek would be developed, the viewshed at the Brown's Mount overlook would be improved, and a boardwalk along Stone Creek would be developed.

In cooperation with partners, an educational program would be developed and implemented that would provide an understanding and appreciation of the refuge's ecology and historic and present human influence on the region's ecosystems. A full-time park ranger would be added to manage the program. We would identify potential outreach events and decide which could provide the greatest return on investment, limiting participation to those events only. As time allows, programs would be presented to local groups (e.g., civic, library, garden clubs, and schools).

The refuge operations specialist and park ranger would be reinstated; a law enforcement officer, a forestry technician, and an engineering equipment operator would be added. In addition to partnerships with the Georgia Department of Natural Resources, the Georgia Forestry Commission, and the Muscogee Creek Nation, as under Alternative A, we would actively participate with local partnerships in resource conservation and land planning, such as Ocmulgee Heritage Greenway, and cooperate with non-governmental organizations and other organizations. Within 15 years of CCP approval, we would plan and construct an office and maintenance yard east of State Route 23. Equipment, such as a tractor, backhoe, 5 trucks, a johnboat with motor, 1 four-wheeler, and trailer, would be acquired.

Next Step

After the comment period ends, we will analyze the comments and address them.

Public Availability of Comments

Before including your address, phone number, e-mail address, or other personal identifying information in your comment, you should be aware that your entire comment—including your personal identifying information—may be made publicly available at any time. While you can ask us in your comment to withhold your personal identifying information from public review, we cannot guarantee that we will be able to do so.

Authority

This notice is published under the authority of the National Wildlife Refuge System Improvement Act of 1997, Public Law 105–57.

Dated: May 17,2009.

Cynthia K. Dohner,

Acting Regional Director.

[FR Doc. E9–14567 Filed 6–19–09; 8:45 am]

BILLING CODE 4310–55–P

DEPARTMENT OF THE INTERIOR

Bureau of Land Management

[LLAK910000 L13100000.DB0000 LXSINSSI0000]

Notice of Public Meeting, North Slope Science Initiative, Science Technical Advisory Panel, Alaska

AGENCY: Bureau of Land Management, North Slope Science Initiative, Interior.

ACTION: Notice of public meeting.

SUMMARY: In accordance with the Federal Land Policy and Management Act (FLPMA) and the Federal Advisory Committee Act of 1972 (FACA), the U.S. Department of the Interior, North Slope Science Initiative (NSSI) Science Technical Advisory Panel (STAP) will meet as indicated below:

DATES: The meeting will be held July 9 and 10, 2009, in Prudhoe Bay, Alaska. On July 9, 2009, the meeting will begin at 1 p.m. in the Arctic Caribou Inn, Ltd. Public comments will begin at 4 p.m. On July 10, 2009, the meeting will begin at 8:30 a.m. at the same location, and will adjourn at 11:45 a.m.

FOR FURTHER INFORMATION CONTACT: John F. Payne, Executive Director, North Slope Science Initiative; c/o Bureau of Land Management, AK–910; 222 W. Seventh Avenue, #13; Anchorage, AK 99513; phone 907–271–3431 or e-mail *john_f_payne@blm.gov.*

SUPPLEMENTARY INFORMATION: The NSSI STAP provides advice and recommendations to the NSSI Oversight Group regarding priority needs for management decisions across the North Slope of Alaska. These priority needs may include recommendations on inventory, monitoring, and research activities that lead to informed land management decisions. The topics to be discussed at the meeting include:

- Emerging issues summary from the STAP;
- Update on the project tracking system;
- Update on the project database;
- NSSI priority issues and projects;
- Other topics the Oversight Group or STAP may raise.

All meetings are open to the public. The public may present written comments to the Science Technical Advisory Panel through the Executive Director, North Slope Science Initiative. Each formal meeting will also have time allotted for hearing public comments. Depending on the number of persons wishing to comment and time available, the time for individual oral comments may be limited. Individuals who plan to attend and need special assistance, such as sign language interpretation, transportation, or other reasonable accommodations, should contact the Executive Director, North Slope Science Initiative.

Before including your address, phone number, e-mail address, or other personal identifying information in your comment, you should be aware that your entire comment—including your personal identifying information—may be made publicly available at any time. While you can ask us in your comment to withhold your personal identifying information from public review, we cannot guarantee that we will be able to do so.

Dated: June 15, 2009.

Thomas P. Lonnie,

Alaska State Director.

[FR Doc. E9–14560 Filed 6–19–09; 8:45 am]

BILLING CODE 1310–JA–P

DEPARTMENT OF THE INTERIOR

National Park Service

Flight 93 National Memorial Advisory Commission

AGENCY: National Park Service, Interior.

ACTION: Notice of August 1, 2009 Meeting.

SUMMARY: This notice sets forth the date of the August 1, 2009 meeting of the Flight 93 Advisory Commission.

DATES: The public meeting of the Advisory Commission will be held on Saturday, August 1, 2009 from 10 a.m. to 1 p.m. (Eastern). The Commission will meet jointly with the Flight 93 Memorial Task Force.

Location: The meeting will be held at the Somerset County Courthouse, Court Room #1, located at 111 E. Union Street, Somerset, PA 15501.

Agenda

The August 1, 2009 joint Commission and Task Force meeting will consist of:

1. Opening of Meeting and Pledge of Allegiance.
2. Review and Approval of Commission Minutes from February 7, 2009.
3. Reports from the Flight 93 Memorial Task Force and National Park Service.
4. Old Business.
5. New Business.
6. Public Comments.
7. Closing Remarks.

FOR FURTHER INFORMATION CONTACT: Joanne M. Hanley, Superintendent, Flight 93 National Memorial, 109 West Main Street, Somerset, PA 15501. 814.443.4557.

SUPPLEMENTARY INFORMATION:

The meeting will be open to the public. Any member of the public may file with the Commission a written statement concerning agenda items. Address all statements to: Flight 93 Advisory Commission, 109 West Main Street, Somerset, PA 15501.

Dated: June 2, 2009.

Joanne M. Hanley,

Superintendent, Flight 93 National Memorial.

[FR Doc. E9–13882 Filed 6–19–09; 8:45 am]

BILLING CODE 4312–25–M

DEPARTMENT OF THE INTERIOR

National Park Service

National Register of Historic Places; Notification of Pending

Nominations and Related Actions Nominations for the following properties being considered for listing or related actions in the National Register were received by the National Park Service before June 6, 2009. Pursuant to section 60.13 of 36 CFR part 60 written comments concerning the significance of these properties under the National Register criteria for evaluation may be forwarded by United States Postal Service, to the National Register of Historic Places, National Park Service, 1849 C St., NW., 2280, Washington, DC 20240; by all other carriers, National Register of Historic Places, National Park Service, 1201 Eye St., NW., 8th floor, Washington, DC 20005; or by fax, 202–371–6447. Written or faxed comments should be submitted by July 7, 2009.

J. Paul Loether,

Chief, National Register of Historic Places/National Historic Landmarks Program.

ARIZONA

Maricopa County

Arizona State Hospital Building, 2500 E. Van Buren St., Phoenix, 09000510

Southern Pacific Railroad Locomotive No. SP 2562 and Tender No. 8365, 330 E. Ryan Rd., Chandler, 09000511

Mohave County

John Osterman Gas Station, 888 US 66, Peach Springs, 09000543

Peach Springs Trading Post (Boundary Increase), 865 US 66, Peach Springs, 09000542

ARKANSAS

Fulton County

Mammoth Spring Dam and Lake, 17 US 63 N., Mammoth Spring, 09000512

Pulaski County

Federal Reserve Bank Building (Boundary Increase), (Thompson, Charles L., Design Collection TR) 123 W. 3rd St., Little Rock, 09000513

Sebastian County

Hartford Commercial Historic District, Buildings on the E. side of Broadway St. from 12 N. Broadway to 106 S. Broadway, Hartford, 09000514

CALIFORNIA

Los Angeles County

Killingsworth, Brady, & Smith, 3827–3837 Long Beach Blvd., Long Beach, 09000515

IOWA

Winneshiek County

Big Stone Mills, (Flour Milling in Iowa MPS) 113 N. Main St., Spillville, 09000516

LOUISIANA

Lafourche Parish Vives House, 923 Jackson St., Thibodaux, 09000517

St. Tammany Parish Haaswood Store, 62011 US 1091, Pearl River, 09000518

MARYLAND

Carroll County

Taylor-Manning-Leppo House, 2600 Patapsco Rd., Finksburg, 09000519

MICHIGAN

Allegan County

Leiendecker's Inn—Coral Gables, 220 Water St., Saugatuck, 09000520

Berrien County

Lakeside Inn, 15251 Lakeshore Rd., Lakeside, 09000521

Houghton County

Lake Linden Historic District, Calumet St. between 1st and 8th plus parts of Hecla and Schoolcraft Sts., Lake Linden, 09000522

Van Buren County

Bangor Elevator, 142 W. Monroe St., Bangor, 09000523

Wayne County

Eberts, John and Emma Lacey, House, 109 Vinewood Ave., Wyandotte, 09000524

Wyandotte Odd Fellows Temple, 81 Chestnut St., Wyandotte, 09000527

NEBRASKA

Buffalo County

Kearney National Guard, 1600 Central Ave., Kearney, 09000525

Douglas County

Northwestern Bell Telephone Company Regional Headquarters, 100 S. 19th St., Omaha, 09000526

Fillmore County

Maple Grove Sales Pavilion and Farrowing Barn, 2408 Rd. W, Tobias, 09000528

NORTH CAROLINA

Greene County

Neoheroka Fort Site, Address Restricted, Snow Hill, 09000529

NORTH DAKOTA

Grant County

Evangelisch Lutheraner Dreieinigkeit Gemeinde (Evangelical Lutheran Trinity Church), 63rd St., SW section 15 Township 135 Range 90, New Leipzig, 09000530

OREGON

Clackamas County

Iron Workers' Cottage, 40 Wilbur St., Lake Oswego, 09000531

Deschutes County

Pictograph Site, Address Restricted, Brothers, 09000532

TENNESSEE

Carter County

Shelving Rock Encampment, TN 143 and Smith Branch Rd., Roan Mountain, 09000533

Hardin County

Savannah Historic District (Boundary Increase), Roughly bounded by College St., Main St., Tennessee St., and Williams St., Savannah, 09000534

Jackson County

Jackson County High School, 707 School Dr., Gainesboro, 09000535

Knox County

Stratford, (Knoxville and Knox County MPS) 809 Dry Gap Pike, Knoxville, 09000536

McMinn County

Trinity United Methodist Church, 100 E. College St., Athens, 09000537

Putnam County

White Plains, 2700 Old Walton Rd., Cookeville, 09000538

Shelby County

Idlewild Presbyterian Church, (Memphis MPS) 1750 Union Ave., Memphis, 09000539

VIRGINIA

Prince William County

Commanding General's Quarters, Quantico Marine Base, 100 Block of Neville Rd., Quantico Marine Base, Quantico, 09000540

WASHINGTON

Kittitas County

Thorp Grade School, (Rural Public Schools of Washington State MPS) 10831 N. Thorp Hwy., Thorp, 09000541

Request for REMOVAL has been made for the following resources:

ARIZONA

Maricopa County

Archeological Site No. AZ U:10:65 (ASM) (Hohokam and Euroamerican Land Use and Settlement Along the Northern Queen Creek Delta MPS), Address Restricted, Mesa, 95000754

Archeological Site No. AZ U:10:66 (ASM) (Hohokam and Euroamerican Land Use and Settlement Along the Northern Queen Creek Delta MPS), Address Restricted, Mesa, 95999754

SOUTH DAKOTA

Spink County

Ashton Methodist Church NE corner of 2nd Ave. and 2nd St., Ashton, 82003939

[FR Doc. E9–14536 Filed 6–19–09; 8:45 am]

BILLING CODE P

DEPARTMENT OF THE INTERIOR

National Park Service

Policy on Special Park Uses, Draft Directors Order 53

AGENCY: National Park Service, Interior.

ACTION: Notice of Availability and Request for Comments.

SUMMARY: The National Park Service (NPS) is requesting comments on its revision of its policy governing the issuance of permits for special park uses. This policy will apply to all units of the national park system, and will replace the previous policy which was issued in April 2000.

DATES: Comments must be received by July 22, 2009.

ADDRESSES: The Draft Director's Order 53 is available on the internet at *http://www.nps.gov/policy/DO-53draft.htm.* Requests for printed copies and written comments should be sent to Lee Dickinson, NPS Special Park Program Manager, 1849 C Street, NW. (2460), Washington, DC 20240 or to the internet address: *lee_dickinson@nps.gov.* Please include ''Comments on Director's Order 53'' in the e-mail subject line.

FOR FURTHER INFORMATION CONTACT: Lee Dickinson at (202) 513–7092.

SUPPLEMENTARY INFORMATION: Director's Order 53 (DO–53) is a policy intended to govern the internal management of the NPS. It will cover topic associated with the special park uses program such as legal authorities for permit issuance, permitting considerations, permit provisions, and the various categories of special park uses. Categories of use will include, but be limited to special events, first amendment demonstrations, commercial filming and still photography, agriculture, and grazing. This new revision of Director's Order 53 will replace the existing one, which was published in April 2000. The reference manual (RM–53) will be revised to outline procedures for implementation of the new version of DO–53.

Commenters should be aware that we may make their entire comment—including personal identifying information—publicly available at any time. While you can ask us to withhold your personal identifying information from public review, we cannot guarantee that we will be able to do so. We will always make submissions from organizations or businesses and from individuals identifying themselves as representatives or officials of organizations or businesses available in their entirety.

Karen Taylor-Goodrich,

Associate Director, Visitor and Resource Protection.

[FR Doc. E9–14588 Filed 6–19–09; 8:45 am]

BILLING CODE 4310–70–P

DEPARTMENT OF THE INTERIOR

National Park Service

Preservation Technology and Training Board Charter Renewal

AGENCY: National Park Service, Interior.

ACTION: Notice of Committee Renewal.

SUMMARY: This notice is published in accordance with Section 9(a) of the Federal Advisory Committee Act of 1972 (5 U.S.C. Appendix). Following consultation with the General Services Administration, notice is hereby given that the Secretary of the Interior has formally renewed the Preservation Technology and Training Board to provide advice and professional oversight to the Secretary and the National Center for Preservation

Technology and Training, as authorized by Title IV, Section 404 of Public Law 102–575, October 30, 1992. The specific duties of the Board are to (1) provide leadership, policy advice, and professional oversight to the Center; (2) advise the Secretary on priorities and the allocation of grants among the activities of the Center; and (3) submit an annual report to the President and the Congress.

FOR FURTHER INFORMATION CONTACT: Kirk Cordell, Executive Director, National Center for Preservation Technology and Training, National Park Service, 645 College Avenue, Natchitoches, Louisiana 71457, (318) 356–7444.

Dated: June 3, 2009.

Ken Salazar,

Secretary of the Interior.

[FR Doc. E9–14590 Filed 6–19–09; 8:45 am]

BILLING CODE P

DEPARTMENT OF LABOR

Occupational Safety and Health Administration

[Docket No. OSHA–2009–0015]

The Hexavalent Chromium Standard; Extension of the Office of Management and Budget's (OMB) Approval of Information Collection (Paperwork) Requirements

AGENCY: Occupational Safety and Health Administration (OSHA), Labor.

ACTION: Request for public comment.

SUMMARY: OSHA solicits comments concerning its proposal to extend OMB approval of the information collection requirements contained in the Hexavalent Chromium (VI) (29 CFR 1910.1026) Standard, and on a potential change to burden hour and cost estimates to the Standard's employee exposure notification requirement in response to a court remand.

DATES: Comments must be submitted (postmarked, sent, or received) by August 21, 2009.

ADDRESSES: *Electronically:* You may submit comments and attachments electronically at *http://www.regulations.gov,* which is the Federal eRulemaking Portal. Follow the instructions online for submitting comments.

Facsimile: If your comments, including attachments, are not longer than 10 pages, you may fax them to the OSHA Docket Office at (202) 693–1648.

Mail, hand delivery, express mail, messenger, or courier service: When using this method, you must submit three copies of your comments and attachments to the OSHA Docket Office, Docket No. OSHA–2009–0015, U.S. Department of Labor, Occupational Safety and Health Administration, Room N–2625, 200 Constitution Avenue, NW., Washington, DC 20210. Deliveries (hand, express mail, messenger, and courier service) are accepted during the Department of Labor's and Docket Office's normal business hours, 8:15 a.m. to 4:45 p.m., e.t.

Instructions: All submissions must include the Agency name and OSHA docket number for the Information Collection Request (ICR) (OSHA–2009–0015). All comments, including any personal information you provide, are placed in the public docket without change, and may be made available online at *http://www.regulations.gov*. For further information on submitting comments see the ''Public Participation'' heading in the section of this notice titled ''**SUPPLEMENTARY INFORMATION**.''

Docket: To read or download comments or other material in the docket, go to *http://www.regulations.gov* or the OSHA Docket Office at the address above. All documents in the docket (including this **Federal Register** notice) are listed in the *http://www.regulations.gov* index; however, some information (e.g., copyrighted material) is not publicly available to read or download through the Web site. All submissions, including copyrighted material, are available for inspection and copying at the OSHA Docket Office. You may contact Jamaa Hill at the address below to obtain a copy of the ICR.

FOR FURTHER INFORMATION CONTACT: Jamaa N. Hill or Todd Owen, Directorate of Standards and Guidance, OSHA, U.S. Department of Labor, Room N–3609, 200 Constitution Avenue, NW., Washington, DC 20210; telephone (202) 693–2222.

SUPPLEMENTARY INFORMATION:

I. Background

The Department of Labor, as part of its continuing effort to reduce paperwork and respondent (i.e., employer) burden, conducts a preclearance consultation program to provide the public with an opportunity to comment on proposed and continuing information collection requirements in accordance with the Paperwork Reduction Act of 1995 (PRA–95) (44 U.S.C. 3506(c)(2)(A)).

This program ensures that information is in the desired format, reporting burden (time and costs) is minimal, collection instruments are clearly understood, and OSHA's estimate of the information collection burden is accurate. The Occupational Safety and Health Act of 1970 (the Act) (29 U.S.C. 651 *et seq.*) authorizes information collection by employers as necessary or appropriate for enforcement of the Act or for developing information regarding the causes and prevention of occupational injuries, illnesses, and accidents (29 U.S.C. 657).

OSHA published the final rule governing occupational exposure to hexavalent chromium on February 28, 2006. The information collection requirements specified in the Chromium (VI) standard protect employees from the adverse health effects that may result from occupational exposure to hexavalent chromium. The major information collection requirements in the Standard include conducting employee exposure monitoring, notifying employees of their chromium (VI) exposures, implementing medical surveillance of employees, providing examining physicians with specific information, implementing a respiratory protection program, demarcating regulated areas, implementing employee information and training programs, notifying laundry personnel of chromium (VI) hazards, and maintaining employees' exposure monitoring and medical surveillance records for specific periods.

A number of parties subsequently challenged several provisions of the final CR(VI) standards in the United States Court of Appeals for the Third Circuit (*see Public Citizen and Edison Electric Institute* v. *U.S. Department of Labor,* XX F.3d XXXX (3d Cir. 2009)). In its decision, the court found that OSHA failed to explain why the Cr(VI) standards require employee notification only of chromium exposures exceeding the permissible exposure limit, noting that prior health standards required notification of all exposure monitoring results. The court remanded the standards, and ordered OSHA to provide an explanation for not including notification of all exposure monitoring results, or to revise the standards appropriately. OSHA currently is considering how to respond to the court's remand order.

II. Special Issues for Comment

OSHA has a particular interest in comments on the following issues:

- Whether the proposed information collection requirements are necessary for the proper performance of the Agency's functions, including whether the information is useful;
- The accuracy of OSHA's estimate of the burden (time and costs) of the

information collection requirements, including the validity of the methodology and assumptions used;

- The quality, utility, and clarity of the information collected; and
- Ways to minimize the burden on employers who must comply, for example, by using automated or other technological information collection and transmission techniques.

III. Proposed Actions

OSHA is requesting that OMB extend its approval of the information collection requirements contained in the Chromium (VI) Standard (29 CFR 1910.1026).

The Agency will summarize the comments submitted in response to this notice and will include this summary in the request to OMB.

Type of Review: Extension of a currently approved collection.

Title: Hexavalent Chromium Standard (29 CFR 1910.1026).

OMB Number: 1218–0252.

Affected Public: Business or other for-profits; Federal Government; State, Local, or Tribal Government.

Number of Respondents: 78,126.

Frequency of Response: On occasion.

Average Time per Response: Time per response ranges from 15 minutes (.25 hour) to notify employees of exposure monitoring results to 20 hours to conduct exposure monitoring.

Estimated Total Burden Hours: 725,319 hours.

Estimated Cost (Operation and Maintenance): $47,751,607.

IV. Public Participation—Submission of Comments on this Notice and Internet Access to Comments and Submissions

You may submit comments in response to this document as follows: (1) Electronically at *http://www.regulations.gov,* which is the Federal eRulemaking Portal; (2) by facsimile (FAX); or (3) by hard copy. All comments, attachments, and other material must identify the Agency name and the OSHA docket number for the ICR (Docket No. OSHA–2009–0015). You may supplement electronic submissions by uploading document files electronically. If you wish to mail additional materials in reference to an electronic or facsimile submission, you must submit them to the OSHA Docket Office (*see* the section of this notice titled **ADDRESSES**). The additional materials must clearly identify your electronic comments by your name, date, and the docket number so the Agency can attach them to your comments.

Because of security procedures, the use of regular mail may cause a significant delay in the receipt of comments. For information about security procedures concerning the delivery of materials by hand, express delivery, messenger, or courier service, please contact the OSHA Docket Office at (202) 693–2350 (TTY (877) 889–5627).

Comments and submissions are posted without change at *http://www.regulations.gov.* Therefore, OSHA cautions commenters about submitting personal information such as social security numbers and date of birth. Although all submissions are listed in the *http://www.regulations.gov* index, some information (e.g., copyrighted material) is not publicly available to read or download through this Web site. All submissions, including copyrighted material, are available for inspection and copying at the OSHA Docket Office. Information on using the *http://www.regulations.gov* Web site to submit comments and access the docket is available at the Web site's ''User Tips'' link. Contact the OSHA Docket Office for information about materials not available through the Web site, and for assistance in using the Internet to locate docket submissions.

V. Authority and Signature

Jordan Barab, Acting Assistant Secretary of Labor for Occupational Safety and Health, directed the preparation of this notice. The authority for this notice is the Paperwork Reduction Act of 1995 (44 U.S.C. 3506 *et seq.*) and Secretary of Labor's Order No. 5–2007 (72 FR 31160).

Signed at Washington, DC, this 17th day of June 2009.

Jordan Barab,

Acting Assistant Secretary of Labor for Occupational Safety and Health.

[FR Doc. E9–14578 Filed 6–19–09; 8:45 am]

BILLING CODE 4510–26–P

DEPARTMENT OF LABOR

Occupational Safety and Health Administration

[Docket No. OSHA–2009–0012]

National Advisory Committee on Occupational Safety and Health (NACOSH); Announcement of Meeting

AGENCY: Occupational Safety and Health Administration (OSHA), Labor.

ACTION: Announcement of meeting.

SUMMARY: The National Advisory Committee on Occupational Safety and Health (NACOSH) will meet July 15, 2009, in Washington, DC.

DATES: *NACOSH meeting:* NACOSH will meet from 9 a.m. to 4 p.m., Wednesday, July 15, 2009.

Submission of comments, requests to speak, and requests for special accommodations: Comments, requests to speak at the NACOSH meeting, and requests for special accommodations for the NACOSH meeting must be submitted (postmarked, sent, transmitted) by July 3, 2009.

ADDRESSES: *NACOSH meeting:* NACOSH will meet in Room N–3437 A/B/C, U.S. Department of Labor, 200 Constitution Avenue, NW., Washington, DC 20210.

Submission of comments and requests to speak: You may submit comments and requests to speak at the NACOSH meeting, identified by docket number for this **Federal Register** notice (Docket No. OSHA–2009–0012), by any one of the following methods:

Electronically: You may submit materials, including attachments, electronically at: *http://www.regulations.gov,* the Federal eRulemaking Portal. Follow the online instructions for making submissions.

Facsimile: If your submission, including attachments, does not exceed 10 pages, you may fax it to the OSHA Docket Office at (202) 693–1648.

Mail, express delivery, hand delivery, messenger or courier service: Submit three copies of your submissions to the OSHA Docket Office, Room N–2625, U.S. Department of Labor, 200 Constitution Avenue, NW., Washington, DC 20210, telephone: (202) 693–2550 (TTY (877) 889–5627). Deliveries (hand, express mail, messenger and courier service) are accepted during the Department of Labor's and OSHA Docket Office's normal business hours, 8:15 a.m. to 4:45 p.m., e.t.

Requests for special accommodations: Submit requests for special accommodations for the NACOSH meeting by hard copy, telephone, or e-mail to Ms. Veneta Chatmon, OSHA, Office of Communications, Room N3647, U.S. Department of Labor, 200 Constitution Avenue, NW., Washington, DC 20210; telephone (202) 693–1999; e-mail *chatmon.veneta@dol.gov.*

Instructions: All submissions must include the Agency name and docket number for this **Federal Register** notice (Docket No. OSHA–2009–0012). Because of security-related procedures, submission by regular mail may result in significant delay in their receipt. In addition, please contact the OSHA Docket Office for information about security procedures for making submissions by hand delivery, express delivery, and messenger or courier

service. For additional information about submitting comments and requests to speak, see the **SUPPLEMENTARY INFORMATION** section of this notice.

Comments and requests to speak, including personal information provided, will be posted without change at *http://www.regulations.gov.* Therefore, OSHA cautions interested parties about submitting personal information such as social security numbers and birth dates.

Docket: To read or download submissions in response to this notice, go to *http://www.regulations.gov.* Although listed in the index, some documents (e.g., copyrighted material) are not publicly available to read or download through *http://www.regulations.gov.* All submissions, including copyrighted material, are available for inspection and copying at the OSHA Docket Office at the address above.

FOR FURTHER INFORMATION: *For press inquiries:* Ms. Jennifer Ashley, OSHA, Office of Communications, U.S. Department of Labor, Room N–3647, 200 Constitution Avenue, NW., Washington, DC 20210; telephone (202) 693–1999.

For general information: Ms. Deborah Crawford, OSHA, Directorate of Evaluation and Analysis, U.S. Department of Labor, Room N–3641, 200 Constitution Avenue, NW., Washington, DC 20210; telephone (202) 693–1932; e-mail *crawford.deborah@dol.gov.*

For special accommodations for the NACOSH meeting: Ms. Veneta Chatmon, OSHA, Office of Communications, Room N–3647, U.S. Department of Labor, 200 Constitution Avenue, NW., Washington, DC 20210; telephone (202) 693–1999; e-mail *chatmon.veneta@dol.gov.*

SUPPLEMENTARY INFORMATION:

NACOSH will meet Wednesday, July 15, 2009, in Washington, DC. All NACOSH meetings are open to the public.

NACOSH is authorized by section 7(a) of the Occupational Safety and Health Act of 1970 (OSH Act) (29 U.S.C. 651, 656) to advise the Secretary of Labor and the Secretary of Health and Human Services on matters relating to the administration of the OSH Act. NACOSH is a continuing advisory body and operates in compliance with provisions in the OSH Act, the Federal Advisory Committee Act (5 U.S.C. App.2), and regulations issued pursuant to those laws (29 CFR 1912a, 41 CFR part 101–6 and 102–3).

The tentative agenda for the NACOSH meeting will include: updates on activities of the Occupational Safety and Health Administration (OSHA) and the National Institute for Occupational Safety and Health (NIOSH); OSHA's recordkeeping initiative; a presentation on the Small Business Regulatory Fairness Act (SBREFA) report on occupational exposure to diacetyl; a legislative update; and a briefing on ethics rules.

NACOSH meetings are transcribed and detailed minutes of the meetings are prepared. Meeting transcripts and minutes are included in the public record of this NACOSH meeting (Docket No. 2009–0012).

Public Participation

Interested parties may submit a request to make an oral presentation to NACOSH by any one of the methods listed in the **ADDRESSES** section above. The request must state the amount of time requested to speak, the interest represented (e.g., organization name), of any and a brief outline of the presentation. Requests to address NACOSH may be granted as time permits and at the discretion of the NACOSH chair.

Interested parties also may submit comments, including data and other information using any one of the methods listed in the **ADDRESSES** section above. OSHA will provide all submission to NACOSH member prior to the meeting.

Individuals who need special accommodations to attend the NACOSH meeting should contact Ms. Chatmon by any one of the methods listed in the **ADDRESSES** section.

Submissions and Access to Meeting Record

You may submit comments and requests to speak (1) Electronically, (2) by facsimile, or (3) by hard copy. All submissions, including attachments and other materials, must identify the Agency name and the docket number for this notice (Docket No. OSHA–2009–0012). You also may supplement electronic submissions by uploading documents electronically. If, instead, you wish to submit hard copies of supplementary documents, you must submit three copies to the OSHA Docket Office using the instructions in the **ADDRESSES** section above. The additional materials must clearly identify your electronic submission by name, date and docket number.

Because of security-related procedures, the use of regular mail may cause a significant delay in the receipt of submissions. For information about security procedures concerning submissions by hand, express delivery, messenger or courier service, please contact the OSHA Docket Office at (202) 693–2350 (TTY (877) 889–5627).

Meeting transcripts and minutes as well as comments and requests to speak at the NACOSH meeting are included in the public record of the NACOSH meeting (Docket No. OSHA–2009–0012). Comments and requests to speak are posted without change at *http://www.regulations.gov.* Therefore, OSHA cautions interested parties about submitting personal information such as social security numbers and birth dates. Although all submissions are listed in the *http://www.regulations.gov* index, some documents (e.g., copyrighted materials) are not publicly available to read or download through *http://www.regulations.gov.* All submissions, including copyrighted material, are available for inspection and copying at the OSHA Docket Office.

Information on using the *http://www.regulations.gov* Web site to make submissions and to access the docket and exhibits is available at the Web site's ''How to Use This Site'' link. Contact the OSHA Docket Office for information about materials not available through the Web site and for assistance in using the Internet to locate submissions and other documents in the docket. Electronic copies of this Federal Register notice are available at *http://www.regulations.gov.* This notice, as well as news releases and other relevant information, is also available on OSHA Webpage at *http://www.osha.gov.*

Authority and Signature

Jordan Barab, Acting Assistant Secretary of Labor for Occupational Safety and Health, directed the preparation of this notice under the authority granted by section 7 of the Occupational Safety and Health Act of 1970 (29 U.S.C. 656), 29 CFR part 1912a, the Federal Advisory Committee Act (5 U.S.C. App. 2), and the Secretary of Labor's Order No. 5–2007 (72 FR 31160).

Signed at Washington, DC this 17th day of June 2009.

Jordan Barab,

Acting Assistant Secretary of Labor for Occupational Safety and Health.

[FR Doc. E9–14576 Filed 6–19–09; 8:45 am]

BILLING CODE 4510–26–P

NATIONAL AERONAUTICS AND SPACE ADMINISTRATION

[Notice (09–055)]

NASA Advisory Council; Meeting

AGENCY: National Aeronautics and Space Administration.

ACTION: Notice of meeting.

SUMMARY: In accordance with the Federal Advisory Committee Act, Public Law 92–463, as amended, the National Aeronautics and Space Administration announces a meeting of the NASA Advisory Council. The agenda for the meeting includes updates from each of the Council committees, including discussion and deliberation of potential recommendations. The Council Committees address NASA's work in the following areas: Aeronautics, Audit and Finance, Space Exploration, Human Capital, Science, and Space Operations.

DATES: Thursday, July 16, 2009, 8 a.m.–4:30 p.m.

ADDRESSES: Columbia Ballroom, The Holiday Inn Capitol, 550 C Street, SW., Washington, DC 20024.

FOR FURTHER INFORMATION CONTACT: Ms. Marguerite Broadwell, Designated Federal Official, National Aeronautics and Space Administration, Washington, DC, 20546, 202/358–1894.

SUPPLEMENTARY INFORMATION: The meeting will be open to the public up to the seating capacity of the room. It is imperative that the meeting be held on this date to accommodate the scheduling priorities of the key participants.

Dated: June 16, 2009.

P. Diane Rausch,

Advisory Committee Management Officer, National Aeronautics and Space Administration.

[FR Doc. E9–14605 Filed 6–19–09; 8:45 am]

BILLING CODE 7510–13–P

NATIONAL COUNCIL ON DISABILITY

Sunshine Act Meetings

TYPE: Quarterly Meeting.

DATES AND TIMES:
July 20, 2009, 8:30 a.m.–4:30 p.m.
July 21, 2009, 9 a.m.–5 p.m.
July 22, 2009, 8:30 a.m.–11 a.m.

LOCATION: Minneapolis Marriott City Center, 30 South 7th Street, Minneapolis, MN 55402.

STATUS:
July 20, 2009, 8:30 a.m.–4:30 p.m.—Open.
July 21, 2009, 9 a.m.–5 p.m.—Open.
July 22, 2009, 8 a.m.–8:30 a.m.—Closed Executive Session.
July 22, 2009, 8:30 a.m.–11 a.m.—Open.

AGENDA: Public Comment Sessions; Emergency Preparedness; Housing; Developmental Disabilities and Bill of Rights Act, Workforce Infrastructure, International Development, 2010 National Summit on Disability Policy, United States Marine Corps Research Project, 2011 Strategic Planning, Reports from the Chairperson, Council Members, and the Executive Director; Unfinished Business; New Business; Announcements; Adjournment.

SUNSHINE ACT MEETING CONTACT: Mark S. Quigley, Director of External Affairs, NCD, 1331 F Street, NW., Suite 850, Washington, DC 20004; 202–272–2004 (voice), 202–272–2074 (TTY), 202–272–2022 (fax).

AGENCY MISSION: NCD is an independent federal agency, composed of 15 members appointed by the President, by and with the consent of the U.S. Senate. The purpose of the NCD is to promote policies, programs, practices, and procedures that guarantee equal opportunity for all individuals with disabilities, and that empower individuals with disabilities to achieve economic self-sufficiency, independent living, and inclusion and integration into all aspects of society. To carry out this mandate we gather public and stakeholder input, including that received at our public meetings held around the country; review and evaluate Federal programs and legislation; and provide the President, Congress and federal agencies with advice and recommendations.

ACCOMMODATIONS: Those needing reasonable accommodations should notify NCD immediately.

Dated: June 9, 2009.

Michael C. Collins,

Executive Director.

[FR Doc. E9–14649 Filed 6–18–09; 11:15 am]

BILLING CODE 6820–MA–P

NUCLEAR REGULATORY COMMISSION

[Docket No. 030–36482; NRC–2009–0253]

Notice of Environmental Assessment Related to the Issuance of a License Amendment to Byproduct Material License No. 24–32439–01, for the Unrestricted Release of a Pharmacia Corporation Building in St. Louis, MO

AGENCY: Nuclear Regulatory Commission.

ACTION: Issuance of environmental assessment and finding of no significant impact for license amendment.

FOR FURTHER INFORMATION CONTACT: Katie Streit, Health Physicist, Materials Control, ISFSI, and Decommissioning Branch, Division of Nuclear Materials and Safety, Region III, U.S. Nuclear Regulatory Commission, 2443 Warrenville Road, Lisle, Illinois 60532; telephone: (630) 829–9621; fax number: (630) 515–1259; or by email at *Katherine.Streit@nrc.gov.*

SUPPLEMENTARY INFORMATION:

I. Introduction

The U.S. Nuclear Regulatory Commission (NRC) is considering the issuance of an amendment to NRC Byproduct Materials License No. 24–32439–01, which is held by The Pharmacia Corporation (the licensee), a wholly owned subsidiary of Pfizer, Inc. The issuance of the amendment would approve the licensee's April 1, 2009, request (ML090920862) to release for unrestricted use its building located at 645 South Newstead Avenue, St. Louis, Missouri (the Facility).

The NRC has prepared an Environmental Assessment (EA) in support of this proposed action in accordance with the requirements of Title 10, Code of Federal Regulations (CFR), Part 51 (10 CFR part 51). Based on the EA, the NRC has concluded that a Finding of No Significant Impact (FONSI) is appropriate with respect to the proposed action. The amendment will be issued to the licensee following the publication of this FONSI and EA in the **Federal Register**.

II. Environmental Assessment

Identification of Proposed Action

The proposed action would approve the licensee's April 1, 2009, license amendment request, resulting in the release of the Facility for unrestricted use consistent with the provisions of 10 CFR Part 20, Subpart E. The licensee was issued License No. 24–32439–01 on April 08, 2004, pursuant to 10 CFR Part 30, and the license has been amended periodically since that time. The license authorized the use of unsealed and sealed byproduct materials for conducting research and development activities, which included animal studies, gas chromatographs, and an irradiator. The Facility is a two story-building with an annex that contained research laboratories, offices, vivarium space, and other mechanical support areas.

The licensee ceased licensed activities at the Facility during March 2009 and initiated a survey and decontamination activities there. Based on the licensee's historical knowledge of the site and the Facility, the licensee determined that

only routine decontamination activities, in accordance with their NRC approved, operating radiation safety procedures, were required. The licensee was not required to submit a decommissioning plan to the NRC because worker cleanup activities and procedures are consistent with those approved for routine operations. The licensee conducted surveys of the Facility and provided information to the NRC to demonstrate that it meets the criteria in Subpart E of 10 CFR Part 20 for unrestricted release. The licensee will continue licensed operations at two other locations authorized by License No. 24–32439–01.

Need for the Proposed Action

The licensee has ceased conducting licensed activities at the Facility, and seeks its unrestricted use.

Environmental Impacts of the Proposed Actions

The licensee's historical review, determined that hydrogen-3 and carbon-14 were the only radionuclides with half-lives greater than 120 days used in the Facility. Prior to performing the final status survey, the licensee conducted decontamination activities, as necessary, in the areas of the Facility where by hydrogen-3 and carbon-14 was used.

The final status survey of the Facility was performed during March 2009. The final status survey report was attached to the Licensee's amendment request dated April 1, 2009 (ML090920862). The licensee elected to demonstrate compliance with the radiological criteria for unrestricted release as specified in 10 CFR 20.1402 by using the screening approach described in NUREG–1757, ''Consolidated Decommissioning Guidance, Decommissioning Process for Material Licensees'' Volume 1 (ML063000243). The licensee used the radionuclide-specific derived concentration guideline levels (DCGLs) developed by the NRC, which conservatively comply with the dose criterion in 10 CFR 20.1402. These DCGLs define the maximum amount of residual radioactivity on building surfaces, equipment, and materials that will satisfy the NRC requirement in Subpart E of 10 CFR Part 20 for unrestricted release. The licensee's final status survey results were below these DCGLs and are in compliance with the As Low As Reasonably Achievable (ALARA) requirement of 10 CFR 20.1402. The NRC thus finds that the licensee's final status survey results are acceptable.

Based on its review, the staff has determined that the affected environment and any environmental impacts associated with the proposed action are bounded by the impacts evaluated by the ''Generic Environmental Impact Statement in Support of Rulemaking on Radiological Criteria for License Termination of NRC–Licensed Nuclear Facilities'' (NUREG–1496) Volumes 1–3 (ML042310492, ML042320379, and ML042330385). The staff finds there were no significant environmental impacts from the use of radioactive material at the Facility. The NRC staff reviewed the docket file records and the final status survey report to identify any non-radiological hazards that may have impacted the environment surrounding the Facility. No such hazards or impacts to the environment were identified. The NRC has identified no other radiological or non-radiological activities in the area that could result in cumulative environmental impacts.

The NRC staff finds that the proposed release of the Facility for unrestricted use is in compliance with 10 CFR 20.1402. Based on its review, the staff considered the impact of the residual radioactivity at the Facility and concluded that the proposed action will not have a significant effect on the quality of the environment.

Environmental Impacts of the Alternatives to the Proposed Action

Due to the largely administrative nature of the proposed action, its environmental impacts are small. Therefore, the only alternative the staff considered is the no-action alternative, under which the staff would leave things as they are by simply denying the amendment request. This no-action alternative is not feasible because it conflicts with 10 CFR 30.36(d) requiring that decommissioning of byproduct material facilities be completed and approved by the NRC after licensed activities cease. The NRC's analysis of the licensee's final status survey data confirmed that the Facility meets the requirements of 10 CFR 20.1402 for unrestricted release. Additionally, denying the amendment request would result in no change in current environmental impacts. The environmental impacts of the proposed action and the no-action alternative are therefore similar, and the no-action alternative is accordingly not further considered.

Agencies and Persons Consulted

NRC provided a draft of this Environmental Assessment to the Missouri Department of Health and Senior Services for review on June 1, 2009. The State responded by email on June 1, 2009, and agreed with the conclusions of the EA, and otherwise had no comments.

The NRC staff has determined that the proposed action is of a procedural nature, and will not affect listed species or critical habitat. Therefore, no further consultation is required under Section 7 of the Endangered Species Act. The NRC staff also determined that the proposed action is not the type of activity that has the potential to cause effects on historic properties. Therefore, no further consultation is required under Section 106 of the National Historic Preservation Act.

Conclusion

The NRC staff has concluded that the proposed action is consistent with the NRC's unrestricted release criteria specified in 10 CFR 20.1402. Because the proposed action will not significantly impact the quality of the human environment, the NRC staff concludes that the proposed action is the preferred alternative.

III. Finding of No Significant Impact

The NRC staff has prepared this EA in support of the proposed action. On the basis of this EA, the NRC finds that there are no significant environmental impacts from the proposed action, and that preparation of an environmental impact statement is not warranted. Accordingly, the NRC has determined that a Finding of No Significant Impact is appropriate.

IV. Further Information

Documents related to this action, including the application for license amendment and supporting documentation, are available electronically at the NRC's Electronic Reading Room at *http://www.nrc.gov/reading-rm/adams.html.* From this site, you can access the NRC's image files of NRC's public documents. If you do not have access to ADAMS, or if there are problems in accessing the documents located in ADAMS, contact the NRC Public Document Room (PDR) Reference staff at 1–800–397–4209, 301–415–4737, or by e-mail to *pdr@nrc.gov.* The documents related to this action are listed below, along with their ADAMS accession numbers.

1. Newstead Avenue Site Decommissioning Final Status Report by Chase Environmental Group, dated March 24, 2009 (ADAMS Accession No. ML090920862)

2. Title 10 Code of Federal Regulations, Part 20, Subpart E, ''Radiological Criteria for License Termination.''

3. Title 10 Code of Federal Regulations, Part 51, ''Environmental

Protection Regulations for Domestic licensing and Related Regulatory Function.''

4. NUREG–1757, Consolidated NMSS Decommissioning Guidance.

These documents may also be viewed electronically on the public computers located at the NRC's PDR, O1F21, One White Flint North, 11555 Rockville Pike, Rockville, MD 20852. The PDR reproduction contractor will copy documents for a fee.

Dated at Lisle, Illinois, this 12th June 2009.

For the Nuclear Regulatory Commission,

George M. McCann,

Acting Branch Chief, Materials Control, ISFSI, and Decommissioning Branch, Division of Nuclear Materials Safety Region III.

[FR Doc. E9–14573 Filed 6–19–09; 8:45 am]

BILLING CODE 7590–01–P

POSTAL SERVICE

International Product Change—Direct Entry Parcels Contracts, International Return Service, and Harmonization Service

AGENCY: Postal Service™.

ACTION: Notice.

SUMMARY: The Postal Service gives notice of filing a request with the Postal Regulatory Commission to add International Direct Entry Parcels Contracts, International Return Service, and Harmonization Service to the Competitive Products List pursuant to 39 U.S.C. 3642.

DATES: June 22, 2009.

FOR FURTHER INFORMATION CONTACT: Margaret M. Falwell, 703–292–3576.

SUPPLEMENTARY INFORMATION: The United States Postal Service® hereby gives notice that it has filed with the Postal Regulatory Commission a Request of United States Postal Service to Add Direct Entry Parcels Contracts, International Return Service, and Harmonization Service to the Competitive Products List, and Notice of Filing (Under Seal) of Contract and Enabling Governors' Decision. Documents are available at *http://www.prc.gov,* Docket Nos. MC2009–26 and CP2009–36.

Neva R. Watson,

Attorney, Legislative.

[FR Doc. E9–14391 Filed 6–19–09; 8:45 am]

BILLING CODE 7710–12–P

RAILROAD RETIREMENT BOARD

Agency Forms Submitted for OMB Review, Request for Comments

Summary: In accordance with the Paperwork Reduction Act of 1995 (44 U.S.C. Chapter 35), the Railroad Retirement Board (RRB) is forwarding an Information Collection Request (ICR) to the Office of Information and Regulatory Affairs (OIRA), Office of Management and Budget (OMB) to request a revision to a currently approved collection of information. Our ICR describes the information we seek to collect from the public. Review and approval by OIRA ensures that we impose appropriate paperwork burdens.

The RRB invites comments on the proposed collections of information to determine (1) the practical utility of the collections; (2) the accuracy of the estimated burden of the collections; (3) ways to enhance the quality, utility and clarity of the information that is the subject of collection; and (4) ways to minimize the burden of collections on respondents, including the use of automated collection techniques or other forms of information technology. Comments to RRB or OIRA must contain the OMB control number of the ICR. For proper consideration of your comments, it is best if RRB and OIRA receive them within 30 days of publication date.

Application for Survivor Death Benefits; OMB 3220–0032

Under Section 6 of the Railroad Retirement Act (RRA), benefits that may be due on the death of a railroad employee *or* a survivor annuitant include (1) a lump-sum death benefit, (2) a residual lump-sum payment, (3) accrued annuities due but unpaid at death, and (4) monthly survivor insurance payments. The requirements for determining the entitlement of possible beneficiaries to these benefits are prescribed in 20 CFR part 234.

When the RRB receives notification of the death of a railroad employee or survivor annuitant, an RRB field office utilizes Form RL–94–F, Survivor Questionnaire, to secure additional information from surviving relatives needed to determine if any further benefits are payable under the RRA. Completion is voluntary. One response is requested of each respondent. The completion time for the RL–94–F is estimated at between 5 to 11 minutes.

Previous Requests for Comments: The RRB has already published the initial 60-day notice (74 FR 10971 on March 13, 2009) required by 44 U.S.C. 3506(c)(2). That request elicited no comments.

Information Collection Request (ICR)

Title: Survivor Questionnaire.

OMB Control Number: OMB 3220–0032.

Form(s) submitted: RL–94–F.

Expiration date of current OMB clearance: 6/30/2009.

Type of request: Revision of a currently approved collection.

Affected public: Individuals or households.

Abstract: Under Section 6 of the Railroad Retirement Act, benefits are payable to the survivors or the estates of deceased railroad employees. The collection obtains information about the survivors if any, the payment of burial expenses and administration of estate when unknown to the Railroad Retirement Board. The information is used to determine whether and to whom benefits are payable.

Changes Proposed: The RRB proposes non-burden impacting editorial changes to Form RL–94–F.

The total burden estimate for the ICR is as follows:

Estimated annual number of respondents: 8,000.

Total annual responses: 8,000.

Total annual reporting hours: 1,391.

Additional Information or Comments: Copies of the form and supporting documents can be obtained from Charles Mierzwa, the agency clearance officer, at (312–751–3363) or *Charles.Mierzwa@rrb.gov.*

Comments regarding the information collection should be addressed to Ronald J. Hodapp, Railroad Retirement Board, 844 North Rush Street, Chicago, Illinois 60611–2092 or *Ronald.Hodapp@rrb.gov* and to the OMB Desk Officer for the RRB, at the Office of Management and Budget, Room 10230, New Executive Office Building, Washington, DC 20503.

Charles Mierzwa,

Clearance Officer.

[FR Doc. E9–14527 Filed 6–19–09; 8:45 am]

BILLING CODE 7905–01–P

SMALL BUSINESS ADMINISTRATION

[Disaster Declaration # 11763 and # 11764]

Florida Disaster Number FL–00042

AGENCY: U.S. Small Business Administration.

ACTION: Amendment 1.

SUMMARY: This is an amendment of the Presidential declaration of a major disaster for the State of Florida (FEMA–1840–DR), dated 05/27/2009.

Incident: Severe Storms, Flooding, Tornadoes, and Straight-line Winds.

Incident Period: 05/17/2009 and continuing through 05/28/2009.

Effective Date: 05/28/2009.

Physical Loan Application Deadline Date: 07/27/2009.

EIDL Loan Application Deadline Date: 03/01/2010.

ADDRESSES: Submit completed loan applications to: U.S. Small Business Administration, Processing and Disbursement Center, 14925 Kingsport Road, Fort Worth, TX 76155.

FOR FURTHER INFORMATION CONTACT: A. Escobar, Office of Disaster Assistance, U.S. Small Business Administration, 409 3rd Street, SW., Suite 6050, Washington, DC 20416.

SUPPLEMENTARY INFORMATION: The notice of the President's major disaster declaration for the State of Florida, dated 05/27/2009 is hereby amended to establish the incident period for this disaster as beginning 05/17/2009 and continuing through 05/28/2009.

All other information in the original declaration remains unchanged.

(Catalog of Federal Domestic Assistance Numbers 59002 and 59008)

James E. Rivera,

Acting Associate Administrator for Disaster Assistance.

[FR Doc. E9–14564 Filed 6–19–09; 8:45 am]

BILLING CODE 8025–01–P

SMALL BUSINESS ADMINISTRATION

[Disaster Declaration # 11778 and # 11779]

Alaska Disaster # AK–00016

AGENCY: U.S. Small Business Administration.

ACTION: Notice.

SUMMARY: This is a Notice of the Presidential declaration of a major disaster for Public Assistance Only for the State of ALASKA (FEMA–1843–DR), dated 06/11/2009.

Incident: Flooding and Ice Jams.

Incident Period: 04/28/2009 and continuing.

Effective Date: 06/11/2009.

Physical Loan Application Deadline Date: 08/10/2009.

Economic Injury (EIDL) Loan Application Deadline Date: 03/11/2010.

ADDRESSES: Submit completed loan applications to: U.S. Small Business Administration, Processing and Disbursement Center, 14925 Kingsport Road, Fort Worth, TX 76155.

FOR FURTHER INFORMATION CONTACT: A. Escobar, Office of Disaster Assistance, U.S. Small Business Administration, 409 3rd Street, SW., Suite 6050, Washington, DC 20416.

SUPPLEMENTARY INFORMATION: Notice is hereby given that as a result of the President's major disaster declaration on 06/11/2009, Private Non-Profit organizations that provide essential services of governmental nature may file disaster loan applications at the address listed above or other locally announced locations.

The following areas have been determined to be adversely affected by the disaster:

Primary Counties: Alaska Gateway Reaa (03); Kuspuk Reaa (29); Lower Kuskokwim Reaa (31); Matanuska-Susitna Borough; Yukon Flats Reaa (51); Yupiit Reaa (54).

The Interest Rates are:

	Percent
Other (Including Non-Profit Organizations) with Credit Available Elsewhere	4.500
Businesses and Non-Profit Organizations without Credit Available Elsewhere	4.000

The number assigned to this disaster for physical damage is 117786 and for economic injury is 117796.

(Catalog of Federal Domestic Assistance Numbers 59002 and 59008)

James E. Rivera,

Acting Associate Administrator for Disaster Assistance.

[FR Doc. E9–14572 Filed 6–19–09; 8:45 am]

BILLING CODE 8025–01–P

SMALL BUSINESS ADMINISTRATION

[Disaster Declaration # 11772 and # 11773]

Florida Disaster Number FL–00043

AGENCY: U.S. Small Business Administration.

ACTION: Amendment 1.

SUMMARY: This is an amendment of the Presidential declaration of a major disaster for Public Assistance Only for the State of Florida (FEMA–1840–DR), dated 06/04/2009.

Incident: Severe Storms, Flooding, Tornadoes, and Straight-line Winds.

Incident Period: 05/17/2009 through 05/28/2009.

Effective Date: 05/28/2009.

Physical Loan Application Deadline Date: 08/03/2009.

Economic Injury (EIDL) Loan Application Deadline Date: 03/04/2010.

ADDRESSES: Submit completed loan applications to: U.S. Small Business Administration, Processing and Disbursement Center, 14925 Kingsport Road, Fort Worth, TX 76155.

FOR FURTHER INFORMATION CONTACT: A. Escobar, Office of Disaster Assistance, U.S. Small Business Administration, 409 3rd Street, SW., Suite 6050, Washington, DC 20416.

SUPPLEMENTARY INFORMATION: The notice of the President's major disaster declaration for Private Non-Profit organizations in the State of Florida, dated 06/04/2009, is hereby amended to establish the incident period for this disaster as beginning 05/17/2009 and continuing through 05/28/2009.

All other information in the original declaration remains unchanged.

(Catalog of Federal Domestic Assistance Numbers 59002 and 59008)

James E. Rivera,

Acting Associate Administrator for Disaster Assistance.

[FR Doc. E9–14568 Filed 6–19–09; 8:45 am]

BILLING CODE 8025–01–P

OFFICE OF SCIENCE AND TECHNOLOGY POLICY

Joint Subcommittee on Ocean Science and Technology, Committee on Environment and Natural Resources, National Science and Technology Council; Update of Charting the Course for Ocean Science in the United States for the Next Decade: An Ocean Research Priorities Plan and Implementation Strategy (aka ''Charting the Course''): Request for Public Input

ACTION: Request for Public Input to an update of the January 2007 *Charting the Course*

SUMMARY: In January 2007, *Charting the Course for Ocean Science in the United States for the Next Decade: An Ocean Research Priorities Plan and Implementation Strategy* (*Charting the Course*) was published. *Charting the Course* was based on input gathered from public and private sources over a period of several months, and it has provided a basis for coordinated ocean science and technology investments. In view of scientific advancements and recognition of new ocean management challenges, the Joint Subcommittee on Ocean Science and Technology (JSOST) is embarking upon an effort to update and refresh *Charting the Course.* This notice solicits public input to inform the drafting of an updated *Charting the Course.*

DATES: Public comments must be received by July 17, 2009.

ADDRESSES: Only electronic (e-mail) comments will be accepted. Comments should be sent to: *comments@jsost.org.*

Please note that all submissions may be posted without change to *http://ocean.ceq.gov/about/jsost.html,* including any personal information provided.

The public comment period will close on July 17, 2009 at 5:00 p.m. EDT. Any comments received after the close of the comment period will not be considered.

The full text of the January 2007 *Charting the Course* is posted at *http://ocean.ceq.gov/about/sup_jsost_prioritiesplan.html*).

FOR FURTHER INFORMATION CONTACT: For information regarding this Notice, please contact *comments@jsost.org.*

SUPPLEMENTARY INFORMATION:

This national plan, released in January of 2007, is intended to present ocean research priorities that focus on the most compelling issues in key areas of interaction between society and the ocean. The goal of *Charting the Course* is to formulate priorities for ocean science and technology initiatives across the wide scope of societal interests and to define the fundamental principles for guiding actions and programs in support of the research priorities. This document also provides guidance on how the various ocean science sectors (government, academia, industry, and non-governmental entities) can and should be engaged, individually or through partnerships, to address the areas of greatest research priority and opportunity.

Charting the Course was developed through a collaborative effort involving academia, industry, non-governmental organizations, state and local governments, and anyone with an interest in ocean issues. The JSOST also developed a series of public and conference information sessions to provide updates on the development of the national ocean research priorities.

Charting the Course concisely gathers together and lays out in a single document the issues and priorities agreed to across the ocean sciences community. It has supported the creation of programs and projects where there were none, and it has guided priorities in federal agency budget submissions beginning in Fiscal Year 2008 and continuing through the latest budget submission, Fiscal Year 2010. The JSOST recognizes the need to harness momentum and magnify this progress.

In the two and a half years since *Charting the Course* was released, much has changed in the understanding of the ocean, its processes and its role in the Earth system as a whole. Much has also changed in our ability to access, explore, observe, and model the ocean and its communities. In light of these changes, and based on encouragement and input from the federal ocean community's external advisory body—the Ocean Research and Resources Advisory Panel (ORRAP)—and the Office of Science and Technology Policy, the JSOST is building a way forward to refresh *Charting the Course* and revisit the priorities it sets forth.

The first and most critical step in this way forward is reaching out to all interested parties for comments on how the current priorities should be revised for the refreshed *Charting the Course.* For example, are there issues that should be listed as priorities under the current six societal themes? Are there important areas that the original *Charting the Course* did not capture? As with developing *Charting the Course,* the JSOST considers community input and involvement in updating the national ocean research priorities a vital component in the process. JSOST is also working with ORRAP to additionally ensure proper community input and communication. All input received will be compiled, cataloged and thoroughly considered by the federal agency writing teams tasked with crafting a refreshed look at our nation's ocean research priorities.

The JSOST is requesting input in this community effort to revise, update and focus *Charting the Course.* Please provide complete contact information (name, affiliation, physical address, phone, e-mail) and note which of the following *Charting the Course* themes your comments address:

- Stewardship of our natural and cultural ocean resources
- Increasing resilience to natural hazards
- Enabling marine operations
- The ocean's role in climate
- Improving ecosystem health
- Enhancing human health
- Other

You may also elect to provide comments on the following *Charting the Course* cross-cutting areas:

- Observations and Infrastructure
- Ocean Education
- Enhancing Basic Understanding

The input obtained through this process will be fully considered as the JSOST drafts the updated *Charting the Course.*

M. David Hodge,

Operations Manager, OSTP.

[FR Doc. E9–14592 Filed 6–19–09; 8:45 am]

BILLING CODE 3170–W9–P

SECURITIES AND EXCHANGE COMMISSION

Sunshine Act Meeting

Notice is hereby given, pursuant to the provisions of the Government in the Sunshine Act, Public Law 94–409, that the Securities and Exchange Commission will hold an Open Meeting on Wednesday, June 24, 2009 at 10 a.m., in the Auditorium, Room L–002.

The subject matter of the Open Meeting will be: The Commission will consider whether to propose amendments governing the operations of money market funds.

At times, changes in Commission priorities require alterations in the scheduling of meeting items.

For further information and to ascertain what, if any, matters have been added, deleted or postponed, please contact: The Office of the Secretary at (202) 551–5400.

Dated: June 17, 2009.

Elizabeth M. Murphy,

Secretary.

[FR Doc. E9–14657 Filed 6–18–09; 11:15 am]

BILLING CODE 8010–01–P

SECURITIES AND EXCHANGE COMMISSION

[File No. 500–1]

In the Matter of Petro America Corp.; Order of Suspension of Trading

June 18, 2009.

It appears to the Securities and Exchange Commission that there is a lack of current and accurate information concerning the securities of Petro America Corp. (''Petro America'') (trading symbol: PTRZ) because of questions regarding the accuracy and adequacy of assertions by Petro America concerning, among other things: The company's business operations and assets, including regarding its purported oil trading and storage business and holdings, its purported millions of dollars in assets, and its securities issued and outstanding.

The Commission is of the opinion that the public interest and the protection of investors require a suspension of trading in securities related to the above company.

Therefore, it is ordered, pursuant to Section 12(k) of the Securities Exchange Act of 1934, that trading in the securities of the above-listed company is suspended for the period from 9:30 a.m. EDT, June 18, 2009 through 11:59 p.m. EDT, on July 1, 2009.

By the Commission.

Elizabeth M. Murphy,

Secretary.

[FR Doc. E9–14673 Filed 6–18–09; 11:15 am]

BILLING CODE 8010–01–P

SECURITIES AND EXCHANGE COMMISSION

[Release No. 34–60106; File No. SR–CBOE–2009–033]

Self-Regulatory Organizations; Chicago Board Options Exchange, Incorporated; Notice of Filing of Proposed Rule Change Regarding Statutory Disqualification Procedures

June 12, 2009.

Pursuant to Section 19(b)(1)[1] of the Securities Exchange Act of 1934 (the ''Exchange Act''),[2] and Rule 19b–4 thereunder,[3] notice is hereby given that on May 26, 2009, the Chicago Board Options Exchange, Incorporated (''CBOE'' or the ''Exchange'') filed with the Securities and Exchange Commission (the ''SEC'' or ''Commission'') the proposed rule change as described in Items I, II, and III below, which Items have been substantially prepared by the Exchange. The Commission is publishing this notice to solicit comments on the proposed rule change from interested persons.

I. Self-Regulatory Organization's Statement of the Terms of Substance of the Proposed Rule Change

The Exchange is proposing to amend its rule regarding members and associated persons who are or become subject to a statutory disqualification. The text of the proposed rule change is available on the Exchange's Web site (*http://www.cboe.org/legal*), at the Exchange's Office of the Secretary, and at the Commission's Public Reference Room.

II. Self-Regulatory Organization's Statement of the Purpose of, and Statutory Basis for, the Proposed Rule Change

In its filing with the Commission, the Exchange included statements concerning the purpose of and basis for the proposed rule change and discussed any comments it received on the proposed rule change. The text of those statements may be examined at the places specified in Item IV below. The Exchange has prepared summaries, set forth in sections A, B, and C below, of the most significant parts of such statements.

A. Self-Regulatory Organization's Statement of the Purpose of, and the Statutory Basis for, the Proposed Rule Change

1. Purpose

Exchange Rule 3.18(a) provides that the Exchange may determine not to permit a member or an associated person of a member who is or becomes subject to a statutory disqualification under the Exchange Act,[4] to continue in membership or in association with a member. Under Rule 3.18(b), a member or an associated person who is or becomes subject to a statutory disqualification and wishes to continue in membership or in association with a member must submit an application to the Exchange to do so. When the Exchange receives such an application, or otherwise becomes aware that a member or an associated person is subject to a statutory disqualification, the Exchange is required to appoint a panel to conduct a hearing under the procedures set forth in Rule 3.18 to determine whether to allow the member or associated person to continue in membership or in association with a member. The purpose of this rule filing is to expand the ability of the Exchange to waive the requirement to conduct a hearing under Rule 3.18 if the Exchange intends to grant a member's application for continued membership or an associated person's application for continued association with a member.

Exchange Act Rule 19h–1[5] prescribes the form and content of, and establishes the mechanism by which the Commission reviews, proposals submitted by self-regulatory organizations (''SROs''), such as the Exchange, to allow a member or associated person subject to a statutory disqualification to become or remain a member or associated with a member. Among other things, Exchange Act Rule 19h–1 provides for Commission review of notices filed by SROs proposing to admit any person to, or continue any person in, membership or association with a member, notwithstanding a statutory disqualification. However, Exchange Act Rule 19h–1(a)(2)[6] and Exchange Act Rule 19h–1(a)(3)[7] provide that for certain persons, and in limited circumstances, a notice does not need to be filed.

Interpretation and Policy .03 to Rule 3.18 currently permits the Exchange to waive the hearing provisions of Rule 3.18 when the Exchange intends to grant an associated person's application for continued association and the Exchange is not required to make a notice filing with the Commission under Exchange Act Rule 19h–1(a)(2).[8] The Exchange is proposing to expand its ability to waive the hearing provisions of Rule 3.18 to when the Exchange intends to grant a member's or associated person's application for continued membership or association and the Exchange is not required to make a notice filing with the Commission under Exchange Act Rule 19h–1(a)(3).

The Exchange is also proposing to waive the hearing provisions of Rule 3.18 when the Exchange determines to allow a member to continue in membership, or an associated person to continue in association with a member, and the Exchange determines that it is otherwise appropriate to waive the hearing provisions of Rule 3.18 under the circumstances. For example, a settlement agreement for a disciplinary matter involving CBOE and multiple regulators or SROs could fully address statutory disqualification issues, obviating the need for a CBOE hearing on those same issues. The Exchange might also choose to exercise this waiver authority when no regulatory purpose would be served by conducting a hearing under Rule 3.18, such as when the Commission initiated the proceeding regarding the underlying conduct that resulted in the statutory disqualification and the sanction imposed in the matter does not inhibit the applicable party's ability to continue as an Exchange member or associated person.

Interpretation and Policy .01 to Rule 3.18 (''Rule 3.18.01'') provides that the Exchange may waive the provisions of Rule 3.18 when a proceeding is pending before another SRO to determine whether to permit a member or an associated person to continue in membership or association with the

[1] 15 U.S.C. 78s(b)(1).

[2] 15 U.S.C. 78a.

[3] 17 CFR 240.19b–4.

[4] 15 U.S.C. 78a *et seq.*

[5] 17 CFR 240.19h–1.

[6] Exchange Act Rule 19h–1(a)(2), 17 CFR 240.19h–1(a)(2), provides that a notice need not be filed with the Commission, pursuant to Exchange Act Rule 19h–1, regarding an associated person subject to a statutory disqualification if the person's activities with respect to the member are solely clerical or ministerial in nature and such person does not have access to funds, securities, or books and records.

[7] Exchange Act Rule 19h–1(a)(3), 17 CFR 240.19h–1(a)(3), provides that a notice need not be filed with the Commission, pursuant to Exchange Act Rule 19h–1, regarding a person or member subject to a statutory disqualification if the person or member proposed for continued association or membership, respectively, satisfies the requirements of Exchange Act Rule 19h–1(a)(3)(i)–(vi).

[8] *See* Securities Exchange Act Release No. 56614 (October 4, 2007), 72 FR 58132 (October 12, 2007) (SR–CBOE–2007–14).

member notwithstanding a statutory disqualification. When the Exchange exercises this waiver authority, Rule 3.18.01 currently provides that the Exchange Department of Financial and Sales Practice Compliance shall determine whether the Exchange will concur in any the Exchange Act Rule 19h–1 filing made by another SRO. The Exchange is proposing to make two clarifying changes to this provision. First, the Exchange proposes to replace the reference to the ''Department of Financial and Sales Practice Compliance'' with the ''Exchange'' because the Exchange no longer has a department by that name. The Exchange is also proposing to include the words ''member or'' in the last sentence of Rule 3.18.01 to clarify that the Exchange may concur in any Exchange Act Rule 19h–1 filing made by another SRO with respect to a member or an associated person. This change is consistent with the rest of Rule 3.18.01.

2. Statutory Basis

The Exchange believes the proposed rule change is consistent with Section 6(b) of the Exchange Act,[9] in general, and furthers the objectives of Section 6(b)(5) of the Exchange Act,[10] which requires, among other things, that the Exchange's rules be designed to remove impediments to and perfect the mechanism of a free and open market and a national market system, and protect investors and the public interest. The Exchange believes that the proposed rule change would better enable the Exchange to streamline the administration of its statutory disqualification program and better protect investors and the public interest by focusing Exchange resources on circumstances sufficient to warrant a statutory disqualification hearing.

B. Self-Regulatory Organization's Statement on Burden on Competition

CBOE does not believe that the proposed rule change will impose any burden on competition that is not necessary or appropriate in furtherance of the purposes of the Exchange Act.

C. Self-Regulatory Organization's Statement on Comments on the Proposed Rule Change Received From Members, Participants, or Others

No written comments were solicited or received with respect to the proposed rule change.

[9] 15 U.S.C. 78f(b).

[10] 15 U.S.C. 78f(b)(5).

III. Date of Effectiveness of the Proposed Rule Change and Timing for Commission Action

Within 35 days of the date of publication of this notice in the **Federal Register** or within such longer period (i) as the Commission may designate up to 90 days of such date if it finds such longer period to be appropriate and publishes its reasons for so finding or (ii) as to which the self-regulatory organization consents, the Commission will:

(A) By order approve such proposed rule change, or

(B) institute proceedings to determine whether the proposed rule change should be disapproved.

IV. Solicitation of Comments

Interested persons are invited to submit written data, views, and arguments concerning the foregoing, including whether the proposed rule change is consistent with the Exchange Act. Comments may be submitted by any of the following methods:

Electronic Comments

- Use the Commission's Internet comment form (*http://www.sec.gov/rules/sro.shtml*); or
- Send an e-mail to *rule-comments@sec.gov.* Please include File Number SR–CBOE–2009–033 on the subject line.

Paper Comments

- Send paper comments in triplicate to Elizabeth M. Murphy, Secretary, Securities and Exchange Commission, 100 F Street, NE., Washington, DC 20549–1090.

All submissions should refer to File Number SR–CBOE–2009–033. This file number should be included on the subject line if e-mail is used. To help the Commission process and review your comments more efficiently, please use only one method. The Commission will post all comments on the Commission's Internet Web site (*http://www.sec.gov/rules/sro.shtml*). Copies of the submission, all subsequent amendments, all written statements with respect to the proposed rule change that are filed with the Commission, and all written communications relating to the proposed rule change between the Commission and any person, other than those that may be withheld from the public in accordance with the provisions of 5 U.S.C. 552, will be available for inspection and copying in the Commission's Public Reference Room, 100 F Street, NE., Washington, DC 20549, on official business days between the hours of 10 a.m. and 3 p.m. Copies of the filing will also be available for inspection and copying at the principal office of CBOE. All comments received will be posted without change; the Commission does not edit personal identifying information from submissions. You should submit only information that you wish to make available publicly. All submissions should refer to File Number SR–CBOE–2009–033 and should be submitted on or before July 13, 2009.

For the Commission, by the Division of Trading and Markets, pursuant to delegated authority.[11]

Florence E. Harmon,

Deputy Secretary.

[FR Doc. E9–14530 Filed 6–19–09; 8:45 am]

BILLING CODE 8010–01–P

[11] 17 CFR 200.30–3(a)(12).

SECURITIES AND EXCHANGE COMMISSION

[Release No. 34–60121, File No. SR–MSRB–2009–05]

Self-Regulatory Organizations; Municipal Securities Rulemaking Board; Order Granting Approval of Proposed Rule Change Relating to the Subscription Service for Continuing Disclosure Documents Through the Electronic Municipal Market Access System (EMMA®)

June 16, 2009.

On April 22, 2009, the Municipal Securities Rulemaking Board (''MSRB''), filed with the Securities and Exchange Commission (''Commission''), pursuant to Section 19(b)(1) of the Securities Exchange Act of 1934 (''Act''),[1] and Rule 19b–4 thereunder,[2] a proposed rule change to establish a real-time subscription to the document collection of the continuing disclosure service of the MSRB's Electronic Municipal Market Access system (''EMMA''). The proposed rule change was published for comment in the **Federal Register** on May 13, 2009.[3] The Commission received no comment letters about the proposal. This order approves the proposed rule change.

The Commission has previously approved the establishment of the continuing disclosure service of EMMA, which will commence operation on July 1, 2009.[4] The proposed rule change

[1] 15 U.S.C. 78s(b)(1).

[2] 17 CFR 240.19b–4.

[3] *See* Securities Exchange Act Release No. 59881 (May 7, 2009), 74 FR 22615 (May 13, 2009) (''Commission's Notice'').

[4] *See* Securities Exchange Act Release No. 59061 (December 5, 2008), 73 FR 75778 (December 12,

consists of a proposal to establish a real-time subscription to the continuing disclosure document collection. The real-time data stream subscription to the EMMA continuing disclosure service to be provided through a Web service would be made available for an annual fee of $45,000.[5] The continuing disclosure subscription service would make available to subscribers all continuing disclosure documents and related information provided by submitters through the EMMA submission process that is posted on the EMMA portal. Such documents and information would be made available to subscribers simultaneously with the posting thereof on the EMMA portal.

The MSRB would make the continuing disclosure subscription service available on an equal and non-discriminatory basis. In addition, the MSRB would not impose any limitations on or additional charges for redistribution of such documents by subscribers to their customers, clients or other end-users. Subscribers would be subject to all of the terms of the subscription agreement to be entered into between the MSRB and each subscriber, including proprietary rights of third parties in information provided by such third parties that is made available through the subscription. The MSRB would not be responsible for the content of the information or documents submitted by submitters distributed to subscribers through the continuing disclosure subscription service. The MSRB has requested approval of the proposed rule change on or prior to July 1, 2009. A full description of the proposal is contained in the Commission's Notice.

The Commission has carefully considered the proposed rule change and finds that the proposed rule change is consistent with the requirements of the Act and the rules and regulations thereunder applicable to the MSRB[6] and, in particular, the requirements of Section 15B(b)(2)(C) of the Act[7] and the rules and regulations thereunder. Section 15B(b)(2)(C) of the Act requires, among other things, that the MSRB's rules be designed to prevent fraudulent and manipulative acts and practices, to promote just and equitable principles of trade, to foster cooperation and coordination with persons engaged in regulating, clearing, settling, processing information with respect to, and facilitating transactions in municipal securities, to remove impediments to and perfect the mechanism of a free and open market in municipal securities, and, in general, to protect investors and the public interest.[8] In particular, the Commission finds that the EMMA continuing disclosure subscription service would serve as a mechanism by which the MSRB works toward removing impediments to and helping to perfect the mechanisms of a free and open market in municipal securities. The subscription service would make the indexed comprehensive collection of continuing disclosure documents of the EMMA continuing disclosure service available to marketplace participants for re-dissemination and for use in creating value-added products and services. Such re-dissemination and third-party use would provide market participants, including investors and the general public, additional avenues for obtaining these key disclosures and would make additional tools available in making well-informed investment decisions. Broad access to continuing disclosure documents through the subscription service, in addition to the public access available through the EMMA Web portal, should further assist in preventing fraudulent and manipulative acts and practices by improving the opportunity for public investors to access material information about issuers, their securities and the prices at which such securities trade.

Furthermore, broader re-dissemination and third-party use of continuing disclosure documents should promote a more fair and efficient municipal securities market in which transactions are effected on the basis of material information available to all parties to such transactions, which should allow for fairer pricing of transactions based on a more complete understanding of the terms of the securities (including any changes thereto), changes in circumstances of issuers and obligated persons, and the potential investment risks arising therefrom.

It is therefore ordered, pursuant to Section 19(b)(2) of the Act,[9] that the proposed rule change (SR–MSRB–2009–05), be, and it hereby is, approved.

For the Commission, by the Division of Trading and Markets, pursuant to delegated authority.[10]

Florence E. Harmon,

Deputy Secretary.

[FR Doc. E9–14593 Filed 6–19–09; 8:45 am]

BILLING CODE 8010–01–P

2008) (File No. SR–MSRB–2008–05) (approving the continuing disclosure service of EMMA with an effective date of July 1, 2009).

[5] The proposed subscription price would cover a portion of the administrative, technical and operating costs of the EMMA continuing disclosure subscription service but would not cover all costs of such subscription service or of the EMMA continuing disclosure service. The MSRB has proposed establishing the subscription price at a fair and reasonable level consistent with the MSRB's objective that subscriptions be made available on terms that promote the broad dissemination of documents and data throughout the marketplace.

[6] In approving this proposed rule change, the Commission notes that it has considered the proposed rule's impact on efficiency, competition and capital formation. 15 U.S.C. 78c(f).

[7] 15 U.S.C. 78o–4(b)(2)(C).

[8] *Id.*

[9] 15 U.S.C. 78s(b)(2).

[10] 17 CFR 200.30–3(a)(12).

SECURITIES AND EXCHANGE COMMISSION

[Release No. 34–60112; File No. SR–FINRA–2009–039]

Self-Regulatory Organizations; Financial Industry Regulatory Authority, Inc.; Notice of Filing of Proposed Rule Change To Adopt FINRA Rule 3310 (Anti-Money Laundering Compliance Program) in the Consolidated FINRA Rulebook

June 15, 2009.

Pursuant to Section 19(b)(1) of the Securities Exchange Act of 1934 (''Act'')[1] and Rule 19b–4 thereunder,[2] notice is hereby given that on June 1, 2009, Financial Industry Regulatory Authority, Inc. (''FINRA'') (f/k/a National Association of Securities Dealers, Inc. (''NASD'')) filed with the Securities and Exchange Commission (''SEC'' or ''Commission'') the proposed rule change as described in Items I, II, and III below, which Items have been substantially prepared by FINRA. The Commission is publishing this notice to solicit comments on the proposed rule change from interested persons.

I. Self-Regulatory Organization's Statement of the Terms of Substance of the Proposed Rule Change

FINRA is proposing to adopt: (1) NASD Rule 3011 (Anti-Money Laundering Compliance Program) as FINRA Rule 3310 (Anti-Money Laundering Compliance Program), without substantive change; (2) NASD IM–3011–1 (Independent Testing Requirements) as supplementary material to proposed FINRA Rule 3310, subject to certain amendments; and (3) NASD IM–3011–2 (Review of Anti-Money Laundering Compliance Person Information) as supplementary material to proposed FINRA Rule 3310, without substantive change. The proposed rule change would delete Incorporated NYSE Rule 445 (Anti-Money Laundering

[1] 15 U.S.C. 78s(b)(1).

[2] 17 CFR 240.19b–4.

Compliance Program) in its entirety as duplicative.

The text of the proposed rule change is available on FINRA's Web site at *http://www.finra.org,* at the principal office of FINRA, and at the Commission's Public Reference Room.

II. Self-Regulatory Organization's Statement of the Purpose of, and Statutory Basis for, the Proposed Rule Change

In its filing with the Commission, FINRA included statements concerning the purpose of and basis for the proposed rule change and discussed any comments it received on the proposed rule change. The text of these statements may be examined at the places specified in Item IV below. FINRA has prepared summaries, set forth in sections A, B, and C below, of the most significant aspects of such statements.

A. Self-Regulatory Organization's Statement of the Purpose of, and Statutory Basis for, the Proposed Rule Change

1. Purpose

As part of the process of developing a new consolidated rulebook (''Consolidated FINRA Rulebook''),[3] FINRA is proposing to adopt: (1) NASD Rule 3011 (Anti-Money Laundering Compliance Program) as FINRA Rule 3310 (Anti-Money Laundering Compliance Program), without substantive change; (2) NASD IM–3011–1 (Independent Testing Requirements) as supplementary material to proposed FINRA Rule 3310, subject to certain amendments; and (3) NASD IM–3011–2 (Review of Anti-Money Laundering Compliance Person Information) as supplementary material to proposed FINRA Rule 3310, without substantive change. The proposed rule change would delete Incorporated NYSE Rule 445 in its entirety (Anti-Money Laundering Compliance Program) as duplicative. The proposed rule change is discussed in further detail below.

Background

NASD Rule 3011 (Anti-Money Laundering Compliance Program) and Incorporated NYSE Rule 445 (Anti-Money Laundering Compliance Program) are substantially similar rules requiring members to develop and implement a written anti-money laundering (''AML'') program reasonably designed to achieve and monitor compliance with the requirements of the Bank Secrecy Act (''BSA'')[4] and the implementing regulations promulgated by the Department of the Treasury. Each member's AML compliance program must be approved, in writing, by a member of senior management.

The rules require that each AML compliance program, must, at a minimum: (1) Establish and implement policies and procedures that can be reasonably expected to detect and cause the reporting of suspicious transactions; (2) establish and implement policies, procedures, and internal controls reasonably designed to achieve compliance with the BSA and its implementing regulations; (3) provide for annual (on a calendar-year basis) independent testing for compliance to be conducted by member personnel or a qualified outside party;[5] (4) designate and identify to FINRA an individual or individuals (*i.e.,* AML compliance person(s)) who will be responsible for implementing and monitoring the day-to-day operations and internal controls of the AML compliance program and provide prompt notification to FINRA of any changes to the designation; and (5) provide ongoing training for appropriate persons.

NASD IM–3011–1 (Independent Testing Requirements) and the supplementary material to Incorporated NYSE Rule 445 also contain substantially similar provisions clarifying that: (1) Members should undertake more frequent testing than required if circumstances warrant; (2) the person conducting the independent test must have a working knowledge of applicable requirements under the BSA and its implementing regulations; and (3) the testing cannot be conducted by the AML compliance person(s), by any person who performs the functions being tested, or by any person who reports to any of these persons.

NASD IM–3011–1, however, permits the AML compliance program testing to be conducted by persons who report to either the AML compliance person or persons performing the functions being tested if: (1) The member has no other qualified internal personnel to conduct the test; (2) the member establishes written policies and procedures to address conflicts that may arise from allowing the test to be conducted by a person who reports to the person(s) whose activities he or she is testing (*e.g.,* anti-retaliation procedures); (3) to the extent possible, the person conducting the test reports the results of the test to someone who is senior to the AML compliance person or persons performing the functions being tested; and (4) the member documents its rationale, which must be reasonable, for determining there is no other alternative than to comply in this manner. In addition, if the person does not report the results consistent with (3) above, the member must document a reasonable explanation for not doing so. Incorporated NYSE Rule 445 does not have a comparable provision.

Finally, NASD IM–3011–2 (Review of Anti-Money Laundering Compliance Person Information) requires each member to identify, review, and if necessary, update the information regarding its AML compliance person in the manner prescribed in NASD Rule 1160.[6] This provision is comparable to SM .03 of NYSE Rule 445.

Proposed FINRA Rule 3310 and Related Supplementary Material

The proposed rule change would adopt NASD Rule 3011 without substantive change into the Consolidated FINRA Rulebook as FINRA Rule 3310 (Anti-Money Laundering Compliance Program). In addition, the proposed rule change would adopt NASD IM–3011–2, without substantive change, as supplementary material to proposed FINRA Rule 3310.

With respect to NASD IM–3011–1, the proposed rule change would adopt its provisions as supplementary material to proposed FINRA Rule 3310, but would eliminate the provision that currently allows, subject to specified conditions, the AML compliance program testing to be conducted by persons who report to either the AML compliance person or persons performing the functions being tested (referred to as the ''independent

[3] The current FINRA rulebook consists of: (1) FINRA Rules; (2) NASD Rules; and (3) rules incorporated from NYSE (''Incorporated NYSE Rules'') (together, the NASD Rules and Incorporated NYSE Rules are referred to as the ''Transitional Rulebook''). While the NASD Rules generally apply to all FINRA members, the Incorporated NYSE Rules apply only to those members of FINRA that are also members of the NYSE (''Dual Members''). The FINRA Rules apply to all FINRA members, unless such rules have a more limited application by their terms. For more information about the rulebook consolidation process, *see* FINRA *Information Notice,* March 12, 2008 (Rulebook Consolidation Process).

[4] *See* 31 U.S.C. 5311, *et seq.*

[5] Both rules permit a member to conduct the independent testing every two years (on a calendar-year basis) if it does not execute transactions for customers or otherwise hold customer accounts or act as an introducing broker with respect to customer accounts (*e.g.,* engages solely in proprietary trading, or conducts business only with other broker-dealers). Incorporated NYSE Rule 445 uses slightly different terminology to achieve the same result, specifically providing that a member may conduct independent testing every two years (on a calendar-year basis) if it ''does not engage in a public business (*e.g.,* engages solely in proprietary trading, or conducts business only with other broker-dealers).''

[6] FINRA is proposing to replace NASD Rule 1160 with FINRA Rule 4540 (Member Information and Data Reporting and Filing Requirements). *See Regulatory Notice* 09–02 (January 2009).

testing exception''). The Financial Crimes Enforcement Network (''FinCEN''), which is responsible for administering the BSA and its implementing regulations, has stated that the independent testing provision of the BSA precludes AML program testing by personnel with an interest in the outcome of the testing and that an independent testing exception, such as the one in NASD IM–3011–1, is inconsistent with this BSA provision and FinCEN's interpretive guidance on the BSA's independent testing requirement.[7] Accordingly, consistent with FinCEN's guidance, FINRA is proposing to eliminate the independent testing exception in connection with its adoption of proposed FINRA Rule 3310.

Finally, as stated previously, the proposed rule change would delete Incorporated NYSE Rule 445 and its related supplementary material in their entirety as duplicative. FINRA will announce the implementation date of the proposed rule change in a *Regulatory Notice* to be published no later than 90 days following Commission approval.

2. Statutory Basis

FINRA believes that the proposed rule change is consistent with the provisions of Section 15A(b)(6) of the Act,[8] which requires, among other things, that FINRA rules must be designed to prevent fraudulent and manipulative acts and practices, to promote just and equitable principles of trade, and, in general, to protect investors and the public interest. FINRA believes that the proposed rule change would continue to assist members in identifying and preventing money laundering abuses that can affect the integrity of the U.S. capital markets.

B. Self-Regulatory Organization's Statement on Burden on Competition

FINRA does not believe that the proposed rule change will result in any burden on competition that is not necessary or appropriate in furtherance of the purposes of the Act.

[7] *See* Letter from Jamal El-Hindi, Associate Director, Regulatory Policy & Programs Division, FinCEN, to Nancy M. Morris, Secretary, SEC (August 22, 2007). FinCEN submitted the letter to the SEC in response to the NYSE's ''omnibus filing,'' a rule filing that sought to achieve greater harmonization between the NYSE and NASD rules, including the AML compliance program rules (SR–NYSE–2007–22). *See* Exchange Act Release No. 56142 (July 16, 2007), 72 FR 42195 (August 1, 2007).

[8] 15 U.S.C. 78*o*–3(b)(6).

C. Self-Regulatory Organization's Statement on Comments on the Proposed Rule Change Received From Members, Participants, or Others

Written comments were neither solicited nor received.

III. Date of Effectiveness of the Proposed Rule Change and Timing for Commission Action

Within 35 days of the date of publication of this notice in the **Federal Register** or within such longer period (i) as the Commission may designate up to 90 days of such date if it finds such longer period to be appropriate and publishes its reasons for so finding or (ii) as to which the self-regulatory organization consents, the Commission will:

(A) By order approve such proposed rule change, or

(B) Institute proceedings to determine whether the proposed rule change should be disapproved.

IV. Solicitation of Comments

Interested persons are invited to submit written data, views and arguments concerning the foregoing, including whether the proposed rule change is consistent with the Act. Comments may be submitted by any of the following methods:

Electronic Comments

- Use the Commission's Internet comment form (*http://www.sec.gov/rules/sro.shtml*); or
- Send an e-mail to *rule-comments@sec.gov*. Please include File Number SR–FINRA–2009–039 on the subject line.

Paper Comments

- Send paper comments in triplicate to Elizabeth M. Murphy, Secretary, Securities and Exchange Commission, 100 F Street, NE., Washington, DC 20549–1090.

All submissions should refer to File Number SR–FINRA–2009–039. This file number should be included on the subject line if e-mail is used. To help the Commission process and review your comments more efficiently, please use only one method. The Commission will post all comments on the Commission's Internet Web site (*http://www.sec.gov/rules/sro.shtml*). Copies of the submission, all subsequent amendments, all written statements with respect to the proposed rule change that are filed with the Commission, and all written communications relating to the proposed rule change between the Commission and any person, other than those that may be withheld from the public in accordance with the provisions of 5 U.S.C. 552, will be available for inspection and copying in the Commission's Public Reference Room, 100 F Street, NE., Washington, DC 20549, on official business days between the hours of 10 a.m. and 3 p.m. Copies of such filing also will be available for inspection and copying at the principal office of FINRA. All comments received will be posted without change; the Commission does not edit personal identifying information from submissions. You should submit only information that you wish to make available publicly. All submissions should refer to File Number insert SR–FINRA–2009–039 and should be submitted on or before July 13, 2009.

For the Commission, by the Division of Trading and Markets, pursuant to delegated authority.[9]

Florence E. Harmon,

Deputy Secretary.

[FR Doc. E9–14531 Filed 6–19–09; 8:45 am]

BILLING CODE 8010–01–P

DEPARTMENT OF STATE

[Public Notice 6635]

Announcement of a Meeting of the International Telecommunication Advisory Committee

Summary: This notice announces a meeting of the International Telecommunication Advisory Committee (ITAC) to prepare for the International Telecommunication Union (ITU) Regional Preparatory Meeting for the World Telecommunication Development Conference.

The ITAC will meet to begin preparation of advice for the U.S. government for the ITU Regional Preparatory Meeting for the World Telecommunication Development Conference, which will be held from August 13–25, 2009 in Lima, Peru. There will also be reports on recent developments in the ITU, OECD, and CITEL.

The ITAC will meet on July 7,2009 at 1120 20th Street, NW., 10th floor, Washington, DC 20036. This meeting is open to the public as seating capacity allows. The public will have an opportunity to provide comments at this meeting. Those desiring further information on these meeting may contact the Secretariat at *jillsonad@state.gov* or at 202–647–7847.

[9] 17 CFR 200.30–3(a)(12).

Dated: June 15, 2009.

Cecily C. Holiday,

International Communications & Information Policy, Department of State.

[FR Doc. E9–14611 Filed 6–19–09; 8:45 am]

BILLING CODE 4710–07–P

DEPARTMENT OF TRANSPORTATION

Federal Aviation Administration

[Docket No. FAA–2009–0546]

Notice of Proposed Airport Access Restriction and Opportunity for Public Comment

AGENCY: Federal Aviation Administration (FAA), Department of Transportation (DOT).

ACTION: Notice; Request for comment.

SUMMARY: The Airport Noise and Capacity Act of 1990 (hereinafter referred to as ''the Act'' or ''ANCA'') provides notice, review, and approval requirements for airports seeking to impose noise or access restrictions on Stage 3 aircraft operations that become effective after October 1, 1990. 49 U.S.C. 47521 *et seq.*

The Federal Aviation Administration (FAA) announces that it has determined the application for an airport noise and access restriction submitted by the Burbank Glendale Pasadena Airport Authority (BGPAA) for Bob Hope Airport (BUR) under the provisions of 49 U.S.C. 47524 of the ANCA, and 14 CFR part 161, to be complete. The BGPAA application seeks approval to implement a mandatory nighttime curfew at Bob Hope Airport. While the determination of completeness is not an approval or disapproval of the proposed airport access restriction, the determination of completeness does trigger the start of FAA's 180-day review period. The FAA will approve or disapprove the proposed noise and access restriction on or before November 1, 2009.

DATES: *Effective Date:* The effective date of the start of FAA's review of the application for a mandatory noise and access restriction at BUR is May 5, 2009. The public comment period ends 30 days from date published in the **Federal Register**.

FOR FURTHER INFORMATION CONTACT: Victoria L. Catlett, Planning and Environmental Division, APP–400, 800 Independence Avenue, SW., Washington, DC 20591. *E-mail address: vicki.catlett@faa.gov.* Telephone number 202–267–8770.

ADDRESSES: You may submit written comments, identified by docket number FAA–2009–0546, by any of the following methods:

Federal eRulemaking Portal: Go to *http://regulations.gov* and follow the online instructions for sending your comments electronically.

Mail: Send comments by mail to Docket Operations, U.S. Department of Transportation, M–30, Room W12–140, 1200 New Jersey Avenue, SE., Washington, DC 20590–0001. Persons wishing to receive confirmation of receipt of their written submission should include a self-addressed stamped postcard.

Hand Delivery: Deliver comments to Docket Operations in Room W12–140 on the ground floor of the West Building at 1200 New Jersey Avenue, SE., Washington, DC, between 9 a.m. and 5 p.m., Monday through Friday, except Federal holidays.

Facsimile: Fax comments to the docket operations personnel at 202–493–2251.

Reviewing the docket: To read background documents or comments received, go to *http://www.regulations.gov* at any time and follow the online instructions for accessing the docket; or go to Docket Operations in Room W12–140 on the ground floor of the West Building at 1200 New Jersey Avenue, SE., Washington, DC, between 9 a.m. and 5 p.m., Monday through Friday, except Federal holidays.

SUPPLEMENTARY INFORMATION: On February 3, 2009, FAA received BGPAA's initial request for approval of a full, mandatory night-time curfew at Bob Hope Airport as described in the attached application. The application states ''Pursuant to FAR Part 161.311(d) the Authority is seeking a full, mandatory night-time curfew as described in the attached application. The Authority is not seeking any other alternative restriction.''

On March 5, 2009, FAA determined that the application was complete except for the environmental documentation provided in support of a categorical exclusion under the National Environmental Policy Act (NEPA). By letter dated March 9, 2009, BGPAA stated its intent to supplement and resubmit the application. On May 5, 2009, FAA received BGPAA's supplemented application. On May 29, 2009, FAA determined BGPAA's application to be complete. Pursuant to 14 CFR 161.313(c)(4)(ii), the FAA's 180-day review period starts on the date of receipt of the last supplement to the application (May 5, 2009).

Pursuant to 14 CFR 161.317, the FAA may approve or disapprove, in whole or in part, the proposed restriction or any alternative restriction, submitted by the BGPAA for FAA approval or disapproval. This notice also announces the availability of the proposed airport access restriction for public review and comment directly to the FAA for 30 days from the date this notice is published in the **Federal Register**.

FAA Action Under Part 161 Subpart D. The FAA will review and render a decision on the restriction as a whole, including its impacts on aircraft operations that are not classified as Stage 3, at the time it issues its decision to approve or disapprove the application for a full nighttime curfew submitted under Subpart D of part 161. This review will include a determination on how the restriction proposal addresses other applicable Federal law and BUR's grant assurances.

The FAA's detailed evaluation will be conducted under the provisions of 14 CFR part 161, § 161.317. The FAA may only approve a restriction that demonstrates by substantial evidence supporting each of the six statutory conditions for approval, contained in the Act and published in 14 CFR part 161, section 161.305. These six statutory conditions of approval are: *Condition 1:* The restriction is reasonable, nonarbitrary, and nondiscriminatory; *Condition 2:* The restriction does not create an undue burden or interstate or foreign commerce; *Condition 3:* The proposed restriction maintains safe and efficient use of the navigable airspace; *Condition 4:* The proposed restriction does not conflict with any existing Federal statute or regulation; *Condition 5:* The applicant has provided adequate opportunity for public comment on the proposed restriction; and *Condition 6:* The proposed restriction does not create an undue burden on the national aviation system.

Interested persons are invited to comment directly to the FAA on the proposed restriction application. The Authority's application is available on the BGPAA Web site at: *http://www.burbankairport.com/*. Your comments should relate to the factors that Part 161 requires an airport sponsor to address in its application for restriction approval. All relevant comments received within the public comment period will be considered by the FAA to the extent practicable before FAA makes its final decision on the application.

Questions may be directed to the individual named above under the heading, **FOR FURTHER INFORMATION CONTACT**.

Issued in Washington, DC, on June 5, 2009.

Catherine M. Lang,

Acting Associate Administrator for Airports.

[FR Doc. E9–14551 Filed 6–19–09; 8:45 am]

BILLING CODE 4910–13–P

DEPARTMENT OF TRANSPORTATION

Surface Transportation Board

[STB Finance Docket No. 35238 (Sub-No. 1)]

BNSF Railway Company—Temporary Trackage Rights Exemption—Union Pacific Railroad Company

AGENCY: Surface Transportation Board.

ACTION: Partial Revocation of Exemption.

SUMMARY: Under 49 U.S.C. 10502, the Board revokes the class exemption as it pertains to the trackage rights described in STB Finance Docket No. 35238 [1] to permit the trackage rights to expire at midnight on December 31, 2009, in accordance with the agreement of the parties, subject to the employee protective conditions set forth in *Oregon Short Line R. Co.—Abandonment—Goshen,* 360 I.C.C. 91 (1979).

DATES: This exemption will be effective on July 22, 2009. Petitions to stay must be filed by July 2, 2009. Petitions for reconsideration must be filed by July 13, 2009.

ADDRESSES: Send an original and 10 copies of all pleadings, referring to STB Finance Docket No. 35238 (Sub-No. 1) to: Surface Transportation Board, 395 E Street, SW., Washington, DC 20423–0001. In addition, a copy of each pleading must be served on BNSF's representative: Karl Morell, of Counsel, Ball Janik LLP, Suite 225, 1455 F Street, NW., Washington, DC 20005.

FOR FURTHER INFORMATION CONTACT: Joseph H. Dettmar, (202) 245–0395. [Assistance for the hearing impaired is available through the Federal Information Relay Service (FIRS) at 1–800–877–8339.]

SUPPLEMENTARY INFORMATION: Additional information is contained in the Board's decision. Board decisions and notices are available on our Web site at *http://www.stb.dot.gov.*

Decided: June 16, 2009.

By the Board, Acting Chairman Mulvey, and Vice Chairman Nottingham.

Kulunie L. Cannon,

Clearance Clerk.

[FR Doc. E9–14547 Filed 6–19–09; 8:45 am]

BILLING CODE 4915–01–P

[1] On April 9, 2009, the BNSF Railway Company (BNSF) concurrently filed a verified notice of exemption under the Board's class exemption procedures at 49 CFR 1180.2(d)(7). The notice covered the agreement by Union Pacific Railroad Company (UP) to grant temporary local trackage rights to BNSF over UP's lines extending between: (1) UP milepost 93.2 at Stockton, CA, on UP's Oakland Subdivision, and UP milepost 219.4 at Elsey, CA, on UP's Canyon Subdivision, a distance of approximately 126.2 miles, and (2) UP milepost 219.4 at Elsey, CA, and UP milepost 280.7 at Keddie, CA, on UP's Canyon Subdivision, a distance of 61.3 miles. BNSF submits that the trackage rights are only temporary rights, but, because they are ''local'' rather than ''overhead'' rights, they do not qualify for the Board's class exemption for temporary trackage rights at 49 CFR 1180.2(d)(8). *See BNSF Railway Company—Temporary Trackage Rights Exemption—Union Pacific Railroad Company*, STB Finance Docket No. 35238 (STB served Apr. 24, 2009).

DEPARTMENT OF THE TREASURY

Submission for OMB Review; Comment Request

June 16, 2009.

The Department of Treasury will submit the following public information collection requirement(s) to OMB for review and clearance under the Paperwork Reduction Act of 1995, Public Law 104–13 on or after the date of publication of this notice. Copies of the submission(s) may be obtained by calling the Treasury Bureau Clearance Officer listed. Comments regarding this information collection should be addressed to the OMB reviewer listed and to the Treasury Department Clearance Officer, Department of the Treasury, Room 11000, 1750 Pennsylvania Avenue, NW., Washington, DC 20220.

DATES: Written comments should be received on or before July 22, 2009 to be assured of consideration.

Financial Management Service (FMS)

OMB Number: 1510–0067.

Type of Review: Revision.

Form: FMS 5903, FMS 5902.

Title: Resolution Authorizing Execution of Depositary, Financial Agency and Collateral Agreement, ''and'' Depositary, Financial Agency.

Description: Financial Institutions are required to complete an Agreement and Resolution to become a depositary of the Government. The approved application designates the depositary as an authorized recipient of deposits of public money and to perform other.

Respondents: Businesses or other for-profits.

Estimated Total Burden Hours: 8 hours.

Clearance Officer: Wesley Powe, (202) 874–7662, Financial Management Service, Room 135, 3700 East West Highway, Hyattsville, MD 20782.

OMB Reviewer: Shagufta Ahmed, (202) 395–7873, Office of Management and Budget, Room 10235, New Executive Office Building, Washington, DC 20503.

Celina Elphage,

Treasury PRA Clearance Officer.

[FR Doc. E9–14577 Filed 6–19–09; 8:45 am]

BILLING CODE 4810–35–P

DEPARTMENT OF THE TREASURY

Submission for OMB Review; Comment Request

June 16, 2009.

The Department of Treasury will submit the following public information collection requirement(s) to OMB for review and clearance under the Paperwork Reduction Act of 1995, Public Law 104–13 on or after the date of publication of this notice. Copies of the submission(s) may be obtained by calling the Treasury Bureau Clearance Officer listed. Comments regarding this information collection should be addressed to the OMB reviewer listed and to the Treasury Department Clearance Officer, Department of the Treasury, Room 11000, 1750 Pennsylvania Avenue, NW., Washington, DC 20220.

DATES: Written comments should be received on or before July 22, 2009 to be assured of consideration.

Alcohol and Tobacco Tax and Trade Bureau (ttb)

OMB Number: 1513–0116.

Type of Review: Extension.

Form: TTB F 5154.3.

Title: Bond for Drawback Under 26 U.S.C. 5131.

Description: Business that use taxpaid alcohol to manufacture nonbeverage products may file a claim for drawback (refund or remittance). Claims may be filed monthly or quarterly. Monthly claimants must file a bond on TTB F 5154.3 to protect the Government's interest.

Respondents: Businesses or other for-profits.

Estimated Total Burden Hours: 10 hours.

OMB Number: 1513–0121.

Type of Review: Extension.

Title: Labeling of major food allergens.

Description: The collection of information involves voluntary labeling of major food allergens used in the production of alcohol beverages and also involves petitions for exemption from full allergen labeling. The collection corresponds to the recent amendments to the FD&C Act in Title II of Public Law 108–282, 118 Stat.905.

Respondents: Businesses or other for-profits.

Estimated Total Burden Hours: 730 hours.

OMB Number: 1513–0115.

Type of Review: Extension.

Title: Usual and Customary Business Records Relating to Wine TTB REC 5120/1.

Description: TTB routinely inspects wineries' usual and customary business records to ensure the proper payment of wine excise taxes due to the Federal government.

Respondents: Businesses or other for-profits.

Estimated Total Burden Hours: 468 hours.

OMB Number: 1513–0114.

Type of Review: Extension.

Form: TTB F 5130.12.

Title: Beer for Exportation.

Description: Unpaid beer may be removed from a brewery for exportation without payment of the excise tax normally due on removal. In order to ensure that exportation took place as claimed and that untaxpaid beer does not reach domestic market TTB requires certification on Form 5130.12.

Respondents: Businesses or other for-profits.

Estimated Total Burden Hours: 5,940 hours.

Clearance Officer: Frank Foote, (202) 927–9347, Alcohol and Tobacco Tax and Trade Bureau, Room 200 East, 1310 G Street, NW., Washington, DC 20005.

OMB Reviewer: Shagufta Ahmed, (202) 395–7873, Office of Management and Budget, Room 10235, New Executive Office Building, Washington, DC 20503.

Celina Elphage,

Treasury PRA Clearance Officer.

[FR Doc. E9–14589 Filed 6–19–09; 8:45 am]

BILLING CODE 4810–31–P

DEPARTMENT OF THE TREASURY

Submission for OMB Review; Comment Request

June 16, 2009.

The Department of Treasury will submit the following public information collection requirement(s) to OMB for review and clearance under the Paperwork Reduction Act of 1995, Public Law 104–13 on or after the date of publication of this notice. Copies of the submission(s) may be obtained by calling the Treasury Bureau Clearance Officer listed. Comments regarding this information collection should be addressed to the OMB reviewer listed and to the Treasury Department Clearance Officer, Department of the Treasury, Room 11000, and 1750 Pennsylvania Avenue, NW. Washington, DC 20220.

DATES: Written comments should be received on or before July 22, 2009 to be assured of consideration.

Internal Revenue Service (IRS)

OMB Number: 1545–1254.

Type of Review: Extension.

Title: Conclusive Presumption of Wothlessness of Debts Held by Banks (FI–34–91) (Final).

Description: Paragraph (d)(3) of section 1.166–2 of the regulations allows banks and thrifts to elect to conform their tax accounting for bad debts with their regulatory accounting. An election, or revocation thereof, is a change in method of accounting. The collection of information required in section 1.166–2(d)(3) is necessary to monitor the elections.

Respondents: Businesses or other for-profits.

Estimated Total Burden Hours: 50 hours.

Clearance Officer: R. Joseph Durbala (202) 622–3634, Internal Revenue Service, Room 6516, 1111 Constitution Avenue, NW., Washington, DC 20224.

OMB Reviewer: Shagufta Ahmed (202) 395–7873, Office of Management and Budget, Room 10235, New Executive Office Building, Washington, DC 20503.

Celina Elphage,

Treasury PRA Clearance Officer.

[FR Doc. E9–14587 Filed 6–19–09; 8:45 am]

BILLING CODE 4830–01–P

DEPARTMENT OF THE TREASURY

Departmental Offices; Privacy Act of 1974, as Amended

AGENCY: Departmental Offices, Treasury.

ACTION: Notice of Proposed Alterations of a Privacy Act System of Records.

SUMMARY: In accordance with the requirements of the Privacy Act of 1974, and the Office of Management and Budget (OMB) Circular A–130 and Memorandum M–07–16, the Department of the Treasury (Department), Office of D.C. Pensions gives notice of a proposed altered system of records entitled, ''D.C. Pensions Retirement Records—Treasury/DO .214.''

DATES: Comments must be received no later than July 22, 2009. The proposed alteration to the system of records will be effective August 3, 2009 unless the Office of D.C. Pensions receives comments which would result in a contrary determination.

ADDRESSES: Comments should be sent to Nancy Ostrowski, Director, Office of D.C. Pensions, Department of the Treasury, 1500 Pennsylvania Avenue, NW., Washington, DC 20220. The Department will make such comments available for public inspection and copying in the Department's Library, Room 1428, Main Treasury Building, 1500 Pennsylvania Avenue, NW., Washington, DC 20220, on official business days between the hours of 10 a.m. and 5 p.m. Eastern Time. You can make an appointment to inspect comments by telephoning (202) 622–0990. All comments, including attachments and other supporting materials, received are part of the public record and subject to public disclosure. You should submit only information that you wish to make available publicly.

FOR FURTHER INFORMATION CONTACT: Nancy Ostrowski, Director, Office of D.C. Pensions, Department of the Treasury, 1500 Pennsylvania Avenue, NW., Washington, DC 20220, at 202–622–2214 or via electronic mail at *nancy.ostrowski@do.treas.gov.*

SUPPLEMENTARY INFORMATION: Pursuant to the Privacy Act of 1974, and the Office of Management and Budget (OMB) Circular A–130 and Memorandum M–07–16, the Office of D.C. Pensions conducted a complete review of its August 9, 2005, published Privacy Act system of records notice and identified changes that more accurately describe its records. The changes throughout the document update the list of records utilized in the Office of D.C. Pensions as of September 2009.

Under provisions in Title XI of the Balanced Budget Act of 1997, as amended (the Act), the Secretary of the Treasury (Secretary) assumed certain responsibilities for a specific population of annuitants under the following District of Columbia (District) retirement plans: The Police Officers' and Firefighters' Retirement Plan; the Teachers' Retirement Plan; and the Judges' Retirement Plan. Specifically, the Secretary is responsible for administering the retirement benefits earned by District police officers, firefighters, and teachers based upon service accrued prior to July 1, 1997; and, retirement benefits earned by District judges, regardless of when service accrued. These benefits are described as Federal benefits. The retirement benefits of District police officers, firefighters, and teachers based upon service accrued starting July 1, 1997 and going forward, are described as District benefits.

With regard to the administration of Federal and District benefits, the

Department of the Treasury (Department) and the District operate under a Memorandum of Understanding (MOU). Under the MOU, the District is responsible for Federal benefits administration duties for current and former District police officers, firefighters, and teachers, including their survivors and beneficiaries. The same MOU stipulates that the Department will provide pension payroll system services to the District for Federal and District benefit payments. The benefits administration responsibilities for current and former D.C. Judges, including survivors and beneficiaries, covered under the District's Judges' Retirement Plan are performed by the Department's Office of D.C. Pensions.

For purposes of this Notice—

a. The term ''current police officers, firefighters, teachers and/or judges'' refers to individuals who are (1) presently working for (not separated or retired from) the District, and performing service subject to the Police Officers' and Firefighters', and Teachers' Retirement Plans; or (2) presently working for (not separated or retired from) the D.C. Courts, and performing service subject to the Judges' Retirement Plan entitling them to benefit payments.

b. The term ''former police officers, firefighters, teachers and/or judges'' refers to individuals who are separated or retired (1) from the District, and who performed service subject to the Police Officers' and Firefighters', or Teachers' Retirement Plans; or (2) from the D.C. Courts, and who performed service subject to the Judges' Retirement Plan entitling them to benefit payments.

c. The term ''benefit payment(s)'' refers to a/an (1) annuity that is paid monthly; (2) lump-sum payment of retirement contributions; and/or (3) lump-sum payment due to a death, made to an eligible recipient.

On May 22, 2007, the Office of Management and Budget (OMB) issued Memorandum M–07–16 entitled, ''Safeguarding Against and Responding to the Breach of Personally Identifiable Information.'' It required agencies to publish the routine use recommended by the President's Identity Theft Task Force. As part of that effort, the Department published the notice of the proposed routine use on October 3, 2007, at 72 FR 56434, and it was effective on November 13, 2007. The new routine use is added as routine use (27).

In addition, two new routine uses are proposed as follows:

(29) To disclose to a surviving spouse, surviving child, dependent parent, and/or legal guardian information necessary to explain how his/her survivor benefit was computed; and,

(30) To disclose to a spouse or dependent child (or court-appointed guardian thereof) of an individual covered by the system, upon request, whether the individual (a) changed his/her election from a self-and-family to a self-only health and/or life insurance benefit enrollment; (b) changed his/her additional survivor benefit election; and/or, (c) received a lump-sum refund of his/her retirement contributions.

Routine use (7) was changed to include auditors and actuaries; and, (9) was changed to reference coordination with contract carriers that provide benefits.

Two routine uses from the August 2005 publication were deleted (specifically, [11] and [27]) because they were redundant and/or the practice is no longer applicable.

The report of an altered system of records, as required by 5 U.S.C. 552a(r) of the Privacy Act, has been submitted to the Committee on Oversight and Government Reform of the House of Representatives; the Committee on Homeland Security and Governmental Affairs of the Senate; and the Office of Management and Budget, pursuant to Appendix I to OMB Circular A–130, ''Federal Agency Responsibilities for Maintaining Records About Individuals,'' dated November 30, 2000.

The proposed altered system of records entitled, ''D.C. Pensions Retirement Records—Treasury/DO .214'' is published in its entirety below.

Dated: June 12, 2009.

Elizabeth Cuffe,

Deputy Assistant Secretary for Privacy and Treasury Records.

Treasury/DO .214

SYSTEM NAME:

D.C. Pensions Retirement Records.

SYSTEM LOCATION:

Office of D.C. Pensions, Department of the Treasury, 1500 Pennsylvania Avenue, NW., Washington, DC 20220. Electronic and paper records are also located at the District and bureaus of the Department, including the Bureau of the Public Debt in Parkersburg, WV. In addition, certain records are located with contractors engaged by the Department.

CATEGORIES OF INDIVIDUALS COVERED BY THE SYSTEM:

a. Current and former police officers, firefighters, teachers, and judges.

b. Surviving spouses, children, and/or dependent parents of current and former police officers, firefighters, teachers, or judges.

c. Former spouses of current and former police officers, firefighters, teachers, or judges.

CATEGORIES OF RECORDS IN THE SYSTEM:

The categories of records include, but is not limited to, identifying information such as: Name(s); contact information; Social Security number; employee identification number; service beginning and end dates; annuity beginning and end dates; date of birth; sex; retirement plan; base pay; average base pay; final salary; type(s) of service and dates used to compute length of service; military base pay amount; purchase of service calculation and amount; and/or benefit payment amount(s).

The types of records in the system may be:

a. Documentation comprised of service history/credit, personnel data, retirement contributions, and/or a refund claim upon which a benefit payment(s) may be based.

b. Medical records and supporting evidence for disability retirement applications and continued eligibility, and documentation regarding the acceptance or rejection.

c. Records submitted by a surviving spouse and/or a child(ren) in support of claims to a benefit payment(s).

d. Consent forms and other records related to the withholding of income tax from a benefit payment(s).

e. Retirement applications, including supporting documentation, and acceptance or denial of such applications.

f. Death claim, including supporting documentation, submitted by a surviving spouse, child(ren), former spouse, and/or beneficiary, that is required to determine eligibility for and receipt of a benefit payment(s), or denial of such claims.

g. Documentation of enrollment and/or change in enrollment for health and life insurance benefits/eligibility.

h. Designation(s) of a beneficiary(ies) for a life insurance benefit and/or an unpaid benefit payment.

i. Court orders submitted by former spouses in support of claims to a benefit payment(s).

j. Records relating to under- and/or over-payments of benefit payments and other debts arising from the responsibility to administer the retirement plans for District police officers, firefighters, teachers, and judges; and, records relating to other Federal debts owed by recipients of Federal benefit payments.

k. Records relating to bankruptcies, tax levies, and garnishments.

l. Records used to determine a total benefit payment and/or if the benefit payment is a District or Federal liability.

m. Correspondence received from current and former police officers, firefighters, teachers, and judges; including their surviving spouses, children, former spouses, dependent parents, and/or beneficiaries.

n. Records relating to time served on behalf of a recognized labor organization.

o. Records relating to benefit payment enrollment and/or change to enrollment for direct deposit to an individual's financial institution.

AUTHORITY FOR MAINTENANCE OF THE SYSTEM:

Title XI, Subtitle A, Chapters 1 through 9, and Subtitle C, Chapter 4, Subchapter B of the Balanced Budget Act of 1997 (as amended), Public Law 105–33.

PURPOSE(S):

These records may provide information on which to base determinations of (1) eligibility for, and computation of, benefit payments; (2) direct deposit elections into a financial institution; (3) eligibility and premiums for health insurance and group life insurance; (4) withholding of income taxes; (5) under- or over-payments to recipients of a benefit payment, and for overpayments, the recipient's ability to repay the overpayment; (6) Federal payment made from the General Fund to the District of Columbia Pension Fund and the District of Columbia Judicial Retirement and Survivors Annuity Fund; (7) impact to the Funds due to proposed Federal and/or District legislative changes; and (8) District or Federal liability for benefit payments to former District police officers, firefighters, and teachers, including survivors and dependents, who are receiving a Federal and/or District benefit.

ROUTINE USES OF RECORDS MAINTAINED IN THE SYSTEM, INCLUDING CATEGORIES OF USERS AND THE PURPOSES OF SUCH USES:

These records and the information in these records may be used:

1. To disclose pertinent information to the appropriate Federal, State, or local agency responsible for investigating, prosecuting, enforcing, or implementing a statute, rule, regulation, or order, where the Department becomes aware of an indication of a violation or potential violation of civil or criminal law or regulation.

2. To disclose information to a Federal agency, in response to its request in connection with the hiring or retention of an employee, the issuance of a security clearance, the conducting of a suitability or security investigation of an individual, the classifying of jobs, the letting of a contract, or the issuance of a license, grant, or other benefit by the requesting agency, to the extent that the information is relevant and necessary to the requesting agency's decision on the matter.

3. To provide information to a congressional office from the record of an individual in response to an inquiry from that congressional office made at the request of that individual.

4. To disclose information to another Federal agency, to a court, or a party in litigation before a court or in an administrative proceeding being conducted by a Federal agency, when the Federal Government is a party to the judicial or administrative proceeding. In those cases where the Federal Government is not a party to the proceeding, records may be disclosed if a subpoena has been signed by a judge.

5. To disclose information to the National Archives and Records Administration for use in records management inspections and its role as an Archivist.

6. To disclose information to the Department of Justice, or in a proceeding before a court, adjudicative body, or other administrative body before which the Department is authorized to appear, when:

(A) The Department or any component thereof;

(B) Any employee of the Department in his or her official capacity;

(C) Any employee of the Department in his or her individual capacity where the Department of Justice or the Department has agreed to represent the employee;

(D) The United States, when the Department determines that litigation is likely to affect the Department or any of its components; or

(E) The Federal funds established by the Act to pay benefit payments is a party to litigation or has an interest in such litigation, and the use of such records by the Department of Justice or the Department is deemed by the Department of Justice or the Department to be relevant and necessary to the litigation provided that the disclosure is compatible with the purpose for which records were collected.

7. To disclose information to contractors, subcontractors, financial agents, grantees, auditors, actuaries, or volunteers performing or working on a contract, service, grant, cooperative agreement, or job for the Department, including the District.

8. To disclose information needed to adjudicate a claim for benefit payments or information needed to conduct an analytical study of benefits being paid under such programs as: Social Security Administration's Old Age, Survivor, and Disability Insurance and Medical Programs; military retired pay programs; and Federal civilian employee retirement programs (Civil Service Retirement System, Federal Employees Retirement System, and other Federal retirement systems).

9. To disclose to the U.S. Office of Personnel Management (OPM) and to the District, information necessary to verify the election, declination, or waiver of regular and/or optional life insurance coverage, or coordinate with contract carriers the benefit provisions of such coverage.

10. To disclose to health insurance carriers contracting with OPM to provide a health benefits plan under the Federal Employees Health Benefits Program or health insurance carriers contracting with the District to provide a health benefits plan under the health benefits program for District employees, Social Security numbers and other information necessary to identify enrollment in a plan, to verify eligibility for payment of a claim for health benefits, or to carry out the coordination for benefits provisions of such contracts.

11. To disclose to any person possibly entitled to a benefit payment in accordance with the applicable order of precedence or to an executor of a deceased person's estate, information that is contained in the record of a deceased current or former police officer, firefighter, teacher, or judge to assist in properly determining the eligibility and amount of a benefit payment to a surviving recipient, or information that results from such determination.

12. To disclose to any person who is legally responsible for the care of an individual to whom a record pertains, or who otherwise has an existing, facially-valid Power of Attorney, including care of an individual who is mentally incompetent or under other legal disability, information necessary to assure application or payment of benefits to which the individual may be entitled.

13. To disclose to the Parent Locator Service of the Department of Health and Human Services, upon its request, the present address of an individual covered by the system needed for enforcing child support obligations of such individual.

14. In connection with an examination ordered by the District or the Department under:

(A) Medical examination procedures; or

(B) Involuntary disability retirement procedures to disclose to the representative of an employee, notices,

decisions, other written communications, or any other pertinent medical evidence other than medical evidence about which a prudent physician would hesitate to inform the individual; such medical evidence will be disclosed only to a licensed physician, designated in writing for that purpose by the individual or his or her representative. The physician must be capable of explaining the contents of the medical record(s) to the individual and be willing to provide the entire record(s) to the individual.

15. To disclose information to any source from which the Department seeks additional information that is relevant to a determination of an individual's eligibility for, or entitlement to, coverage under the applicable retirement, life insurance, and health benefits program, to the extent necessary to obtain the information requested.

16. To disclose information to the Office of Management and Budget at any stage of the legislative coordination and clearance process in connection with private relief legislation as set forth in OMB Circular No. A–19.

17. To disclose to an agency responsible for the collection of income taxes the information required by an agreement authorized by law to implement voluntary income tax withholdings from benefit payments.

18. To disclose to the Social Security Administration the names and Social Security numbers of individuals covered by the system when necessary to determine: (1) Their vital status as shown in the Social Security Master Records; and (2) whether retirees receiving benefit payments under the District's retirement plan for police officers and firefighters with post-1956 military service credit are eligible for or are receiving old age or survivors benefits under section 202 of the Social Security Act based upon their wages and self-employment income.

19. To disclose to Federal, State, and local government agencies information to help eliminate fraud and abuse in a benefits program administered by a requesting Federal, State, or local government agency; to ensure compliance with Federal, State, and local government tax obligations by persons receiving benefits payments; and/or to collect debts and overpayments owed to the requesting Federal, State, or local government agency.

20. To disclose to a Federal agency, or a person or an organization under contract with a Federal agency to render collection services for a Federal agency as permitted by law, in response to a written request from the head of the agency or his designee, or from the debt collection contractor, data concerning an individual owing a debt to the Federal Government.

21. To disclose, as permitted by law, information to a State court or administrative agency in connection with a garnishment, attachment, or similar proceeding to enforce alimony or a child support obligation.

22. To disclose information necessary to locate individuals who are owed money or property by a Federal, State or local government agency, or by a financial institution or similar institution, to the government agency owing or otherwise responsible for the money or property (or its agent).

23. To disclose information necessary in connection with the review of a disputed claim for health benefits to a health plan provider participating in the Federal Employees Health Benefits Program or the health benefits program for employees of the District, and to a program enrollee or covered family member or an enrollee or covered family member's authorized representative.

24. To disclose information to another Federal agency for the purpose of effecting administrative or salary offset against a person employed by that agency, or who is receiving or eligible to receive benefit payments from the agency when the Department as a creditor has a claim against that person relating to benefit payments.

25. To disclose information concerning delinquent debts relating to benefit payments to other Federal agencies for the purpose of barring delinquent debtors from obtaining Federal loans or loan insurance guarantees pursuant to 31 U.S.C. 3720B.

26. To disclose to State and local governments information used for collecting delinquent debts relating to benefit payments.

27. To appropriate agencies, entities, and persons when (a) the Department suspects or has confirmed that the security or confidentiality of information in the system of records has been compromised; (b) the Department has determined that as a result of the suspected or confirmed compromise there is a risk of harm to economic or property interests, identity theft or fraud, or harm to the security or integrity of this system or other systems or programs (whether maintained by the Department or another agency or entity) that rely upon the compromised information; and (c) the disclosure made to such agencies, entities, and persons is reasonably necessary to assist in connection with the Department's efforts to respond to the suspected or confirmed compromise and prevent, minimize, or remedy such harm.

28. To disclose to a former spouse information necessary to explain how his/her former spouse's benefit was computed.

29. To disclose to a surviving spouse, surviving child, dependent parent, and/or legal guardian information necessary to explain how his/her survivor benefit was computed.

30. To disclose to a spouse or dependent child (or court-appointed guardian thereof) of an individual covered by the system, upon request, whether the individual a) changed his/her election from a self-and-family to a self-only health and/or life insurance benefit enrollment, b) changed his/her additional survivor benefit election, and/or c) received a lump-sum refund of his/her retirement contributions.

DISCLOSURES TO CONSUMER REPORTING AGENCIES:

Pursuant to 5 U.S.C. 552a(b)(12), disclosures may be made from this system to consumer reporting agencies in accordance with 31 U.S.C. 3711(e).

POLICIES AND PRACTICES FOR STORING, RETRIEVING, SAFEGUARDING, RETAINING AND DISPOSING OF RECORDS IN THE SYSTEM: STORAGE:

These records are maintained in hard copy and in an electronic format, including (but not limited to) on magnetic tapes, disks, microfiche.

RETRIEVABILITY:

These records are retrieved by various combinations of name; date-of-birth; Social Security number; and/or an automatically assigned, system generated number of the individual to whom they pertain.

SAFEGUARDS:

Paper records are kept in lockable metal file cabinets or in a secured facility with access limited to those persons whose official duties require access. Data in electronic format is encrypted or password protected. Personnel screening and training are employed to prevent unauthorized disclosure.

RETENTION AND DISPOSAL:

Records on a claim for retirement, including salary and service history, survivor annuity elections, and tax and other withholdings are destroyed after 115 years from the date of the former police officer's, firefighter's, teacher's or judge's birth; or 30 years after the date of his/her death, if no application for benefits is received. If a survivor or former spouse receives a benefit payment, such record is destroyed after

his/her death. All other records covered by this system may be destroyed in accordance with approved District and Department guidelines. Paper records are destroyed by shredding or burning. Records in electronic media are electronically erased using accepted techniques.

SYSTEM MANAGER(S) AND ADDRESS:

Director, Office of D.C. Pensions, U.S. Department of the Treasury, Washington, DC 20220.

NOTIFICATION PROCEDURE:

Individuals seeking notification and access to any record contained in the system of records, or seeking to contest its contents, should contact the system manager. Individuals must furnish the following information for their records to be located and identified:

a. Name, including all former names.
b. Date of birth.
c. Social Security number.
d. Signature.
e. Contact information.

Individuals requesting amendment of their records must also follow the Department's Privacy Act regulations regarding verification of identity and amendment of records (31 CFR part 1 subpart C, appendix A).

RECORD ACCESS PROCEDURE:

See ''Notification procedure,'' above.

CONTESTING RECORD PROCEDURE:

See ''Notification procedure,'' above.

RECORD SOURCE CATEGORIES:

The information in this system is obtained from:

a. The individual to whom the information pertains.
b. District pay, leave, and allowance records.
c. Health benefits and life insurance plan systems records maintained by the Office of Personnel Management, the District, and health and life insurance carriers.
d. Federal civilian retirement systems.
e. Military retired pay system records.
f. Social Security Old Age, Survivor, and Disability Insurance and Medicare Programs.
g. Official personnel folders.
h. The individual's co-workers and supervisors.
i. Physicians who have examined or treated the individual.
j. Surviving spouse, child(ren), former spouse(s), and/or dependent parent of the individual to whom the information pertains.
k. State courts or support enforcement agencies.
l. Credit bureaus and financial institutions.
m. Government Offices of the District of Columbia, including the D.C. Retirement Board.
n. The General Services Administration National Payroll Center.
o. Educational institutions.

EXEMPTIONS CLAIMED FOR THE SYSTEM:

None.

[FR Doc. E9–14579 Filed 6–19–09; 8:45 am]
BILLING CODE 4810–94–P

U.S.-CHINA ECONOMIC AND SECURITY REVIEW COMMISSION

Notice of Open Public Hearing

AGENCY: U.S.-China Economic and Security Review Commission.

ACTION: Notice of open public hearing—July 23, 2009, Rochester, NY

SUMMARY: Notice is hereby given of the following hearing of the U.S.-China Economic and Security Review Commission.

Name: Carolyn Bartholomew, Chairman of the U.S.-China Economic and Security Review Commission.

The Commission is mandated by Congress to investigate, assess, evaluate and report to Congress annually on the national security implications and impact of the bilateral trade and economic relationship between the United States and the People's Republic of China, and to provide recommendations, where appropriate, to Congress for legislative and administrative action.

Pursuant to this mandate, the Commission will hold a public hearing in Rochester, New York.

Background

This event is the seventh in a series of public hearings the Commission will hold during its 2009 report cycle to collect input from leading experts in government, business, industry, academia and the public on the impact of the economic and national security implications of the U.S. growing bilateral trade and economic relationship with China. The July 23 hearing is being conducted to obtain commentary on the impact of globalization and trade with China on New York State companies and communities. This hearing will address the perspectives of local government representatives, academics, and entrepreneurs, and will be co-chaired by Commissioners Dennis Shea and Patrick Mulloy.

Information on upcoming hearings, as well as transcripts of past Commission hearings, can be obtained from the USCC Web site *http//www.uscc.gov*.

Purpose of Hearing

The hearing is designed to assist the Commission in fulfilling its mandate by examining the impact of globalization on New York State. The hearing will also highlight the consequences for local business of competition with Chinese companies, the relocation of production to China, and the current efforts by both the New York State government, industry leaders and other institutions to promote economic growth in the region.

Copies of the hearing agenda will be made available on the Commission's Web Site *http://www.uscc.gov*. Any interested party may file a written statement by July 23, 2009, by mailing to the contact below.

The full day hearing will be held in two sessions, one in the morning and one in the afternoon where Commissioners will take testimony from invited witnesses. There will be a question and answer period between the Commissioners and the witnesses. Public participation is invited during an open-microphone session for public comment at the conclusion of the afternoon session. Sign-up for open-microphone session will take place in the morning of July 23 beginning at 8:45 a.m. and will be on first come, first served basis. Each individual or group making an oral presentation will be limited to a total of 5 minutes. Because of time constraints, parties with common interests are encouraged to designate a single speaker to represent their views.

Date and Time: Thursday, July 23, 2009 at 8:45 a.m. to 4:30 p.m. Eastern Daylight Time. A detailed agenda for the hearing will be posted to the Commission's Web Site *http://www.uscc.gov* in the near future.

ADDRESSES: The hearing will be held at the Center for Integrated Manufacturing Studies, Rochester Institute of Technology, Rochester, New York. Public seating is on a first come, first serve basis. Advance reservations are not required.

FOR FURTHER INFORMATION CONTACT: Any member of the public wishing further information concerning the hearing should contact Kathy Michels, Associate Director for the U.S.-China Economic and Security Review Commission, 444 North Capitol Street, NW., Suite 602, Washington, DC 20001; phone: 202–624–1409, or via e-mail at *kmichels@uscc.gov*.

Authority: Congress created the U.S.-China Economic and Security Review Commission in 2000 in the National Defense Authorization Act (Pub. L. 106–398), as amended by Division P of the

Consolidated Appropriations Resolution, 2003 (Pub. L. 108–7), as amended by Pub. L. 109–108 (November 22, 2005), and Public Law 110–161 (December 26, 2007).

Dated: June 17, 2009.

Kathleen J. Michels,

Associate Director, U.S.-China Economic and Security Review Commission.

[FR Doc. E9–14562 Filed 6–19–09; 8:45 am]

BILLING CODE 1137–00–P

DEPARTMENT OF VETERANS AFFAIRS

[OMB Control No. 2900–0113]

Agency Information Collection (Application for Fee or Personnel Designation) Activity Under OMB Review

AGENCY: Veterans Benefits Administration, Department of Veterans Affairs.

ACTION: Notice.

SUMMARY: In compliance with the Paperwork Reduction Act (PRA) of 1995 (44 U.S.C. 3501–3521), this notice announces that the Veterans Benefits Administration, Department of Veterans Affairs, has submitted the collection of information abstracted below to the Office of Management and Budget (OMB) for review and comment. The PRA submission describes the nature of the information collection and its expected cost and burden and includes the actual data collection instrument.

DATE: Comments must be submitted on or before July 22, 2009.

ADDRESSES: Submit written comments on the collection of information through *http://www.Regulations.gov;* or to VA's OMB Desk Officer, OMB Human Resources and Housing Branch, New Executive Office Building, Room 10235, Washington, DC 20503, (202) 395–7316. Please refer to ''OMB Control No. 2900–0113'' in any correspondence.

FOR FURTHER INFORMATION CONTACT: Denise McLamb, Enterprise Records Service (005R1B), Department of Veterans Affairs, 810 Vermont Avenue, NW., Washington, DC 20420, (202) 461–7485, fax (202) 273–0443 or e-mail *denise.mclamb@mail.va.gov.* Please refer to ''OMB Control No. 2900–0113.''

SUPPLEMENTARY INFORMATION:

Title: Application for Fee or Personnel Designation, VA Form 26–6681.

OMB Control Number: 2900–0113.

Type of Review: Extension of a currently approved collection.

Abstract: Applicants complete VA form 26–6681 to apply for a position as a designate fee appraiser or compliance inspector. VA will use the data collected to determine the applicant's experience in the real estate valuation field.

An agency may not conduct or sponsor, and a person is not required to respond to a collection of information unless it displays a currently valid OMB control number. The **Federal Register** Notice with a 60-day comment period soliciting comments on this collection of information was published on April 15, 2009 at page 17553.

Affected Public: Individuals or households.

Estimated Annual Burden: 3,100 hours.

Estimated Average Burden per Respondent: 30 minutes.

Frequency of Response: One-time.

Estimated Number of Respondents: 6,200.

Dated: June 16, 2009.

By direction of the Secretary.

Denise McLamb,

Program Analyst, Enterprise Records Service.

[FR Doc. E9–14516 Filed 6–19–09; 8:45 am]

BILLING CODE 8320–01–P

DEPARTMENT OF VETERANS AFFAIRS

[OMB Control No. 2900–0554]

Proposed Information Collection (Homeless Providers Grant and Per Diem Program) Activity; Comment Request

AGENCY: Veterans Health Administration, Department of Veterans Affairs.

ACTION: Notice.

SUMMARY: The Veterans Health Administration (VHA), Department of Veterans Affairs (VA), is announcing an opportunity for public comment on the proposed collection of certain information by the agency. Under the Paperwork Reduction Act (PRA) of 1995, Federal agencies are required to publish notice in the **Federal Register** concerning each proposed collection of information, including each proposed extension of a currently approved collection, and allow 60 days for public comment in response to the notice. This notice solicits comments on the information needed to determine an applicant's eligibility to receive a grant and/or per diem for programs to assist homeless veterans' transition to independent living.

DATES: Written comments and recommendations on the proposed collection of information should be received on or before August 21, 2009.

ADDRESSES: Submit written comments on the collection of information through *http://www.Regulations.gov;* or to Mary Stout, Veterans Health Administration (193E1), Department of Veterans Affairs, 810 Vermont Avenue, NW., Washington, DC 20420 or e-mail: *mary.stout@va.gov.* Please refer to ''OMB Control No. 2900–0554'' in any correspondence. During the comment period, comments may be viewed online through the Federal Docket Management System (FDMS) at *http://www.Regulations.gov.*

FOR FURTHER INFORMATION CONTACT: Mary Stout (202) 461–5867 or FAX (202) 273–9381.

SUPPLEMENTARY INFORMATION: Under the PRA of 1995 (Pub. L. 104–13; 44 U.S.C. 3501–3521), Federal agencies must obtain approval from the Office of Management and Budget (OMB) for each collection of information they conduct or sponsor. This request for comment is being made pursuant to Section 3506(c)(2)(A) of the PRA.

With respect to the following collection of information, VHA invites comments on: (1) Whether the proposed collection of information is necessary for the proper performance of VHA's functions, including whether the information will have practical utility; (2) the accuracy of VHA's estimate of the burden of the proposed collection of information; (3) ways to enhance the quality, utility, and clarity of the information to be collected; and (4) ways to minimize the burden of the collection of information on respondents, including through the use of automated collection techniques or the use of other forms of information technology.

Titles

a. Homeless Providers Grant and Per Diem Program, Capital Grant Application, VA Form 10–0361–CG.

b. Homeless Providers Grant and Per Diem Program, Life Safety Code Application, VA Form 10–0361–LSC.

c. Homeless Providers Grant and Per Diem Program, Per Diem Only Application, VA Form 10–0361–PDO.

d. Homeless Providers Grant and Per Diem Program, Special Needs Application, VA Form 10–0361–SN.

e. Compliance Reports for Per Diem and Special Needs Grants. No form needed. May be reported to VA in standard business narrative.

f. Homeless Providers Grant and Per Diem Program, Technical Assistance Application, VA Form 10–0361–TA.

g. Compliance Reports for Technical Assistance Grants. No form needed. May be reported to VA in standard business narrative.

OMB Control Number: 2900–0554.

Type of Review: Extension of a currently approved collection.

Abstract: VA Form 10–0361 series, Homeless Providers Grant and Per Diem Program, will be used to evaluate applicants eligibility to receive a grant and/or per diem payments which provide supportive housing and services to assist homeless veterans transition to independent living. VA will use the data to apply specific criteria to rate and evaluate each application; and to obtain information necessary to ensure that Federal funds are awarded to applicants who are financially stable and who will conduct the program for which a grant and/or per diem award was made.

Affected Public: Not-for-profit institutions.

Estimated Annual Burden

a. Homeless Providers Grant and Per Diem Program, Capital Grant Application, VA Form 10–0361–CG—3,500 hours.

b. Homeless Providers Grant and Per Diem Program, Life Safety Code Application, VA Form 10–0361–LSC—2,000 hours.

c. Homeless Providers Grant and Per Diem Program, Per Diem Only Application, VA Form 10–0361–PDO—3,000 hours.

d. Homeless Providers Grant and Per Diem Program, Special Needs Application, VA Form 10–0361–SN—4,000 hours.

e. Compliance Reports for Per Diem and Special Needs Grants—1,500 hours.

f. Homeless Providers Grant and Per Diem Program, Technical Assistance Application, VA Form 10–0361–TA—250 hours.

g. Compliance Reports for Technical Assistance Grants—90 hours.

Estimated Average Burden per Respondent

a. Homeless Providers Grant and Per Diem Program, Capital Grant Application, VA Form 10–0361–CG—35 hours.

b. Homeless Providers Grant and Per Diem Program, Life Safety Code Application, VA Form 10–0361–LSC—10 hours.

c. Homeless Providers Grant and Per Diem Program, Per Diem Only Application, VA Form 10–0361–PDO—20 hours.

d. Homeless Providers Grant and Per Diem Program, Special Needs Application, VA Form 10–0361–SN—20 hours.

e. Compliance Reports for Per Diem and Special Needs Grants—5 hours.

f. Homeless Providers Grant and Per Diem Program, Technical Assistance Application, VA Form 10–0361–TA—10 hours.

g. Compliance Reports for Technical Assistance Grants—2.25 hours.

Frequency of Response: On occasion.

Estimated Number of Respondents

a. Homeless Providers Grant and Per Diem Program, Capital Grant Application, VA Form 10–0361–CG—100.

b. Homeless Providers Grant and Per Diem Program, Life Safety Code Application, VA Form 10–0361–LSC—200.

c. Homeless Providers Grant and Per Diem Program, Per Diem Only Application, VA Form 10–0361–PDO—150.

d. Homeless Providers Grant and Per Diem Program, Special Needs Application, VA Form 10–0361–SN—200.

e. Compliance Reports for Per Diem and Special Needs Grants—300.

f. Homeless Providers Grant and Per Diem Program, Technical Assistance Application, VA Form 10–0361–TA—25.

g. Compliance Reports for Technical Assistance Grants—40.

Dated: June 16, 2009.

By direction of the Secretary.

Denise McLamb,

Program Analyst, Enterprise Records Service.

[FR Doc. E9–14517 Filed 6–19–09; 8:45 am]

BILLING CODE 8320–01–P

DEPARTMENT OF VETERANS AFFAIRS

[OMB Control No. 2900–New 10–21093a–c]

Agency Information Collection (A Veteran's Faith: Spirituality Influences Coping With Cancer) Under OMB Review

AGENCY: Veterans Health Administration, Department of Veterans Affairs.

ACTION: Notice.

SUMMARY: In compliance with the Paperwork Reduction Act (PRA) of 1995 (44 U.S.C. 3501–21), this notice announces that the Veterans Health Administration (VHA), Department of Veterans Affairs, will submit the collection of information abstracted below to the Office of Management and Budget (OMB) for review and comment. The PRA submission describes the nature of the information collection and its expected cost and burden and includes the actual data collection instrument.

DATES: Comments must be submitted on or before July 22, 2009.

ADDRESSES: Submit written comments on the collection of information through *http://www.Regulations.gov;* or to VA's OMB Desk Officer, Office of Information and Regulatory Affairs, New Executive Office Building, Room 10235, Washington, DC 20503, (202) 395–7316. Please refer to ''OMB Control No. 2900—New 10–21093a–c'' in any correspondence.

FOR FURTHER INFORMATION OR A COPY OF THE SUBMISSION CONTACT: Denise McLamb, Enterprise Records Service (005R1B), Department of Veterans Affairs, 810 Vermont Avenue, NW., Washington, DC 20420, (202) 461–7485, FAX (202) 273–0443 or e-mail: *denise.mclamb@mail.va.gov*. Please refer to ''OMB Control No. 2900–New 10–21093a–c.''

SUPPLEMENTARY INFORMATION:

Title: A Veteran's Faith: Spirituality Influences Coping With Cancer, VA Forms 10–21093a–c.

OMB Control Number: 2900—New 10–21093a–c.

Type of Review: New collection.

Abstract: VA will use the data collected to measure whether cancer patients' spiritual beliefs give them the ability to cope with the illness.

An agency may not conduct or sponsor, and a person is not required to respond to a collection of information unless it displays a currently valid OMB control number. The **Federal Register** Notice with a 60-day comment period soliciting comments on this collection of information was published on April 15, 2009 at pages 17553–17554.

Affected Public: Individuals or Households.

Estimated Annual Burden: 10 hours.

Estimated Average Burden per Respondent: 40.

Frequency of Response: Annually.

Dated: June 16, 2009.

By direction of the Secretary.

Denise McLamb,

Program Analyst, Enterprise Records Service.

[FR Doc. E9–14518 Filed 6–19–09; 8:45 am]

BILLING CODE 8320–01–P

DEPARTMENT OF VETERANS AFFAIRS

[OMB Control No. 2900–0724]

Agency Information Collection (FVECF) Activities Under OMB Review

AGENCY: Veterans Benefits Administration, Department of Veterans Affairs.

ACTION: Notice.

SUMMARY: In compliance with the Paperwork Reduction Act (PRA) of 1995

(44 U.S.C. 3501–3521), this notice announces that the Veterans Benefits Administration (VBA), Department of Veterans Affairs, will submit the collection of information abstracted below to the Office of Management and Budget (OMB) for review and comment. The PRA submission describes the nature of the information collection and its expected cost and burden; it includes the actual data collection instrument.

DATE: Comments must be submitted on or before July 22, 2009.

ADDRESSES: Submit written comments on the collection of information through *http://www.Regulations.gov* or to VA's OMB Desk Officer, Office of Information and Regulatory Affairs, New Executive Office Building, Room 10235, Washington, DC 20503, (202) 395–7316. Please refer to ''OMB Control No. 2900–0724'' in any correspondence.

FOR FURTHER INFORMATION CONTACT: Denise McLamb, Enterprise Records Service (005R1B), Department of Veterans Affairs, 810 Vermont Avenue, NW., Washington, DC 20420, (202) 461–7485, FAX (202) 273–0443 or e-mail *denise.mclamb@va.gov.* Please refer to ''OMB Control No. 2900–0724.''

SUPPLEMENTARY INFORMATION:

Title: Statement in Support of Claim (Filipino Veterans Equity Compensation Fund), VA Form 21–4138(CF).

OMB Control Number: 2900–0724.

Type of Review: Extension of a currently approved collection.

Abstract: Veterans who served in the organized military forces of the Government of the Commonwealth of the Philippines, including certain service in the Philippine Scouts or in organized guerrilla forces recognized by the United States Army, while such forces were in the service of the Armed Forces of the United States, are entitled to a one-time payment from the Filipino Veterans Equity Compensation Fund. The veteran must be honorably discharged and served before July 1, 1946 to receive the one-time payment. Applicants seeking this one-time payment must complete VA Form 21–4138(CF) to determine eligibility and file their claim on or before February 16, 2010.

An agency may not conduct or sponsor, and a person is not required to respond to a collection of information unless it displays a currently valid OMB control number. The **Federal Register** Notice with a 60-day comment period soliciting comments on this collection of information was published on April 15, 2009, at page 17554.

Affected Public: Individuals or households.

Estimated Annual Burden: 1,500 hours.

Estimated Average Burden per Respondent: 5 minutes.

Frequency of Response: One time.

Estimated Number of Respondents: 18,000.

Dated: June 16, 2009.

By direction of the Secretary.

Denise McLamb,

Program Analyst, Enterprise Records Service.

[FR Doc. E9–14519 Filed 6–19–09; 8:45 am]

BILLING CODE 8320–01–P

Federal Register

Monday,
June 22, 2009

Part II

Department of Transportation

National Highway Traffic Safety Administration

49 CFR Part 575

Tire Fuel Efficiency Consumer Information Program; Proposed Rule

DEPARTMENT OF TRANSPORTATION

National Highway Traffic Safety Administration

49 CFR Part 575

[Docket No. NHTSA–2008–0121]

RIN 2127–AK45

Tire Fuel Efficiency Consumer Information Program

AGENCY: National Highway Traffic Safety Administration, Department of Transportation (NHTSA).

ACTION: Notice of proposed rulemaking (NPRM).

SUMMARY: This document proposes a broad new consumer information program for replacement tires to inform consumers about the effect of tires on fuel efficiency, safety, and durability. This consumer information program would implement a national tire fuel efficiency rating system for replacement tires, with the information provided to consumers at the point of sale and online. Fuel efficiency ratings are expected to inform consumers so that they will be better informed about replacement tire performance. This consumer information program seeks to enhance energy security and reduce costs by improving fuel economy. Information would also be provided about safety and durability.

DATES: Comments to this proposal must be received on or before August 21, 2009. In compliance with the Paperwork Reduction Act, NHTSA is also seeking comment on a new information collection. *See* the Paperwork Reduction Act section under Regulatory Notices and Analyses below. Please submit all comments relating to new information collection requirements on or before August 21, 2009.

ADDRESSES: You may submit comments, identified by the docket number in the heading of this document, by any of the following methods:

- *Federal eRulemaking Portal:* Go to *http://www.regulations.gov*. Follow the instructions for submitting comments on the electronic docket site by clicking on ''Help'' or ''FAQ.''
- *Mail:* Docket Management Facility, M–30, U.S. Department of Transportation, 1200 New Jersey Avenue, SE., West Building, Ground Floor, Room W12–140, Washington, DC 20590.
- *Hand Delivery:* 1200 New Jersey Avenue, SE., West Building Ground Floor, Room W12–140, between 9 a.m. and 5 p.m. Eastern Time, Monday through Friday, except Federal holidays.
- *Fax:* 202–493–2251.

Regardless of how you submit comments, you should mention the docket number of this document.

You may call the Docket Management Facility at 202–366–9826.

Instructions: For detailed instructions on submitting comments and additional information on the rulemaking process, *see* the Public Participation heading of the **SUPPLEMENTARY INFORMATION** section of this document. Note that all comments received will be posted without change to *http://www.regulations.gov,* including any personal information provided.

Privacy Act: Anyone is able to search the electronic form of all comments received into any of our dockets by the name of the individual submitting the comment (or signing the comment, if submitted on behalf of an association, business, labor union, *etc.*). You may review DOT's complete Privacy Act Statement in the **Federal Register** published on April 11, 2000 (65 FR 19477–78) or you may visit *http://www.dot.gov/privacy.html*.

Docket: For access to the docket to read background documents or comments received, go to *http://www.regulations.gov,* or the street address listed above. Follow the online instructions for accessing the dockets.

FOR FURTHER INFORMATION CONTACT:

For policy and technical issues: Ms. Julie Abraham or Ms. Mary Versailles, Office of Rulemaking, National Highway Traffic Safety Administration, 1200 New Jersey Avenue, SE., Washington, DC 20590. Telephone: (202) 366–0846.

For legal issues: Mr. Stephen Wood or Ms. Sarah Alves, Office of the Chief Counsel, National Highway Traffic Safety Administration, 1200 New Jersey Avenue, SE., Washington, DC 20590. Telephone: (202) 366–2992.

SUPPLEMENTARY INFORMATION:

Table of Contents

I. Executive Overview
A. Summary
B. Energy Independence and Security Act of 2007
C. Proposal
1. Test Procedures
2. Proposed Rolling Resistance Rating Metric
3. Proposed Label
4. Proposed Information Dissemination and Reporting Requirements for Tire Manufacturers and Tire Retailers
5. Consumer Education Program
D. Costs and Benefits
E. Lead Time
II. Background
A. Contribution of Tire Maintenance and Tire Fuel Efficiency to Addressing Energy Independence and Security
1. Tire Fuel Efficiency and Rolling Resistance
2. Relationship Between Tire Maintenance and Tire Fuel Efficiency and Vehicle Fuel Economy
3. 2006 National Academy of Sciences Report
4. California
5. European Union
6. Japan
B. Energy Independence and Security Act of 2007 Mandated Consumer Tire Information Program
1. Tires Subject to the Consumer Information Program
2. Mandate To Create a National Tire Fuel Efficiency Rating System
3. Communicating Information to Consumers
4. Specification of Test Methods
5. Creating a National Consumer Education Program on Tire Maintenance
6. Consultation in Setting Standards
7. Application With State and Local Laws and Regulations
8. Compliance and Enforcement
9. Reporting to Congress
III. Which Tires Must Be Rated?
A. Passenger Car Tires
B. Replacement Tires
C. Tires within a Tire Model
D. Tires Excluded
IV. Rolling Resistance Test Procedure
A. Rolling Resistance
B. Possible Test Procedures Available to Measure Rolling Resistance
C. NHTSA Research Results
D. Why Select a Single-Point Test Instead of Multi-Point?
E. Why Select ISO 28580 Instead of Other Tests?
V. Proposed Rolling Resistance Rating Metric
VI. Proposed Rating System
A. What Should We Convey to Consumers in a Rating System?
1. Fuel Efficiency
2. Safety
i. Potential Safety Consequences
ii. Test Procedure
3. Durability
4. Overall Rating
B. How Should We Convey the Information to Consumers in a Rating System?
1. Proposed Rating Formulas
i. Fuel Efficiency
ii. Safety
iii. Durability
2. Proposed Label Style
VII. Proposed Information Dissemination and Reporting Requirements for Tire Manufacturers and Tire Retailers
A. The Replacement Passenger Car Tire Market
B. Assumptions about the Average Tire Purchaser and the Average Tire Purchasing Process
C. What Are We Proposing To Require of Tire Retailers?
D. What Are We Proposing To Require of Tire Manufacturers?
1. Data Reporting
2. Tire Labels
E. Requirements for Tire Retailers and Tire Manufacturers With an Internet Presence
F. Uniform Tire Quality Grading Standards
VIII. NHTSA's Consumer Education Program
A. Previous Tire Consumer Education Efforts

B. Potential Future Consumer Education Efforts
1. What Information Should NHTSA Convey?
2. Point of Sale
3. Interactive Mediums
4. Web Site Development
5. Paper Brochure Materials
6. Partnership Development
7. Exhibits and Conferencing
8. Local Education Programs
IX. Costs and Benefits
A. Costs
B. Benefits
X. Lead Time
XI. Compliance Tolerances
A. Fuel Efficiency
B. Safety
C. Durability
XII. Regulatory Alternatives
XIII. Public Participation
XIV. Regulatory Notices and Analyses
A. Executive Order 12866 and DOT Regulatory Policies and Procedures
B National Environmental Policy Act
C. Regulatory Flexibility Act
D. Executive Order 13132 (Federalism)
E. Executive Order 12988 (Civil Justice Reform)
F. Unfunded Mandates Reform Act
G. Paperwork Reduction Act
H. Executive Order 13045
I. National Technology Transfer and Advancement Act
J. Executive Order 13211
K. Regulation Identifier Number (RIN)
L. Plain Language
M. Privacy Act

I. Executive Overview

A. Summary

This document is being issued pursuant to the Energy Independence and Security Act of 2007 (EISA),[1] which was enacted in December 2007. EISA included a requirement that NHTSA develop a national tire fuel efficiency consumer information program to educate consumers about the effect of tires on automobile fuel efficiency, safety, and durability. Consumers currently have little, if any, convenient way of determining how tire choices can affect vehicle fuel economy.

The collective effects of the choices consumers make when they buy tires are matters of public interest. The 240 million passenger cars and light trucks in the United States consume about 135 billion gallons of motor fuel annually.[2] Finding ways to reduce this energy consumption is a national goal for reasons ranging from ensuring economic and national security to improving local air quality and reducing greenhouse gas emissions. Rolling resistance, or the force required to make the tires roll, differs from tire to tire and is a characteristic that indicates a tire's fuel efficiency. Consumers, if sufficiently informed and interested, could bring about a reduction in average rolling resistance of replacement tires by adjusting their tire purchases, and as a consequence, significantly reduce the amount of fuel consumed annually. While the handling, traction, and other operating characteristics of tires are of particular interest to tire buyers, they are also matters of even broader public interest in as much as they may influence the safety performance of vehicles on the nation's highways.

Congress required NHTSA to establish a tire fuel efficiency consumer information program, including a replacement tire fuel efficiency rating system. This requirement is evidently a response to a market failure in the form of imperfectly informed decisions on the part of consumers; the program attempts to respond to the market failure. In the same vein, EISA requires that NHTSA develop requirements for providing this information to consumers, and a national tire maintenance consumer education program. All tires require proper inflation and maintenance to achieve their intended levels of efficiency, safety, wear, and operating performance. NHTSA has previously addressed the importance of proper tire inflation to safety and fuel efficiency in various public service campaigns. NHTSA has also mandated that tire pressure monitoring systems (TPMSs) be installed on new motor vehicles,[3] but TPMS is not a substitute for proper tire maintenance. Motorists must be alerted to the fact that even small losses in inflation pressure can reduce tire treadwear life, fuel efficiency, and operating performance.[4]

This document proposes to require tire manufacturers to label their replacement tires for fuel efficiency, safety, and durability based on test procedures specified by the agency. These tests address three aspects of tire performance: rolling resistance, traction and treadwear life. As noted above and described in further detail below, rolling resistance is a measurement of fuel efficiency. A measurement of traction is intended to indicate a tire's ability to stop on wet pavement. Thus, traction is one metric that corresponds to safety. A treadwear rating measures a tire's wear rate compared with that of control tires. Treadwear life, therefore, corresponds to a measure of durability.

Comparing this new proposed label across potential replacement tires would enable consumers to see how different replacement tires can affect the fuel economy they are getting from their vehicle. The label would also allow consumers to see the tradeoff they may be facing between fuel efficiency, safety (*i.e.,* traction), and durability (*i.e.,* treadwear life), and how the balance of these factors may differ from tire to tire. NHTSA's research has found that while tire construction need not sacrifice traction or treadwear for improved fuel efficiency, maintaining the same traction and treadwear while increasing the fuel efficiency of a given tire often entails higher costs.[5] Thus, if a manufacturer seeks to improve the fuel efficiency of a given replacement tire construction while keeping cost constant, there is a substantial chance that the construction will sacrifice either traction or treadwear.

The agency is proposing to require that tire retailers display a tire fuel efficiency consumer information program poster that NHTSA will print and provide to retailers. The poster would communicate the importance of comparing replacement tire ratings as well as the importance of proper tire maintenance. The agency is also proposing to require tire retailers and tire manufacturers that maintain Web sites to link to NHTSA's comprehensive tire Web site it will be developing as part of a national tire maintenance consumer education program. The agency seeks comments on any other information dissemination requirements that would ensure that easy-to-understand information is conveyed in a way that is most likely to impact consumers' decisions and, thus, affect their behavior and save them and our nation fuel and money.

In developing the proposal, the agency conducted tire testing research to determine which test procedure would best standardize a fuel efficiency rating and provide accurate discrimination among replacement tires. The agency is proposing the specific test procedure by which manufacturers are to measure rolling resistance for the rating system. NHTSA also conducted consumer focus group research to improve understanding of the typical tire purchaser and the tire purchasing

[1] Public Law 110–140, 121 Stat. 1492 (Dec. 18, 2007).

[2] Transportation Energy Data Book, Edition 27, Tables 4–1 and 4–2, available at *http://cta.ornl.gov/data/index.shtml* (last accessed Mar. 5, 2009).

[3] *See* 70 FR 18136 (April 8, 2005).

[4] Transportation Research Board Special Report 286, Tires and Passenger Vehicle Fuel Economy, National Research Council of the National Academies, 5 (2006) (hereinafter ''2006 NAS Report'').

[5] *See* National Highway Traffic Safety Administration, NHTSA Tire Rolling Resistance Rating System Test Development Project: Phase 2—Effects of Tire Rolling Resistance Levels on Traction, Treadwear, and Vehicle Fuel Economy (February 2009). This Phase 2 research report will be placed in the docket.

process for the average consumer. NHTSA's preliminary consumer research explored the type of label (including forms of rating, scales, and graphic) that best communicates the information to consumers. In this notice, we are proposing a label based on the rating scale and presentation that tested best with consumers and that promises to improve the operation of the market in terms of three factors (fuel economy, safety, and durability) that matter to consumers. We are aware that by itself, the rating scale may not make the relevant information fully meaningful to consumers; from the label alone, it is not entirely clear what a high rating, rather than a low one, will mean in terms of what matters to consumer choices. The agency is planning to do additional consumer testing, including additional types of testing such as quantitative and experimental techniques, to make the label as meaningful as possible. At this point, the agency cannot project the expected consumer reaction to this program, and it will engage in continued testing to provide such projections. The agency requests comment on the proposed rating systems, the proposed label, and potential future consumer research.

NHTSA is also publishing a companion Preliminary Regulatory Impact Analysis (PRIA) that provides an analysis on the potential economic impacts of this consumer information program. The agency seeks comment on this preliminary analysis.

B. Energy Independence and Security Act of 2007

The provision of EISA that mandates the consumer tire information program built on a legislative proposal originally introduced in 2006 after a NAS report was issued suggesting that a tire fuel efficiency consumer information program could increase vehicle fuel economy by an average of 1 to 2 percent.[6] Many factors affect a vehicle's fuel economy, including the tire's rolling resistance, or force required to make the tires roll. The 2006 NAS report estimated that 4 percent (urban) to 7 percent (highway) of the energy available from the vehicle's fuel usage is used to overcome the rolling resistance of the tires. Therefore, reducing rolling resistance can reduce a vehicle's fuel consumption. As one of many strategies to meet the Federal corporate average fuel economy (CAFE) standards for new passenger cars and light trucks, automobile manufacturers often equip vehicles with low rolling resistance tires. However, consumers often unknowingly purchase higher rolling resistance tires when replacing their vehicle tires, because information on the comparative rolling resistance of tires and its impact on vehicle fuel economy is not readily available.

One of the most significant of the EISA mandates is the setting of separate maximum feasible standards for passenger cars and for light trucks at levels sufficient to ensure that the average fuel economy of the combined fleet of all passenger cars and light trucks sold by all manufacturers in the U.S. in model year (MY) 2020 equals or exceeds 35 miles per gallon. In the near future, per the President's announcement, NHTSA and the Environmental Protection Agency (EPA) intend to initiate a joint rulemaking with NHTSA proposing CAFE standards under the Energy Policy and Conservation Act (EPCA), as amended by EISA, and EPA proposing greenhouse gas emissions standards under the Clean Air Act.[7] It is intended that this joint rulemaking proposal will reflect a carefully coordinated and harmonized approach to implementing these two statutes.[8] The new standards will propose a significant increase in fuel economy by 2016.[9] This consumer tire information program is one of the actions that will contribute towards the larger goals of energy independence and security.

Section 111 of EISA added section 32304A to Chapter 323 of title 49, United States Code. This chapter codifies consumer information requirements initially established by the Motor Vehicle Information and Cost Savings Act of 1972 (Pub. L. 92–513). The new section 32304A is entitled ''Consumer tire information'' and specifies as follows:

- Within 24 months of the enactment of EISA, NHTSA is to promulgate rules establishing a national tire fuel efficiency consumer information program for replacement tires to educate consumers about the effect of tires on fuel efficiency, safety, and durability.
- The program must include a national tire fuel efficiency rating system for replacement tires to assist consumers in making more educated tire purchasing decisions.
- NHTSA must specify requirements for providing information to consumers, including information at the point of sale and other potential dissemination methods, including the Internet.
- NHTSA must also specify the test methods that manufacturers are to use in assessing and rating tires to avoid variation among test equipment and manufacturers.
- As a part of the consumer information program, NHTSA must develop a national tire maintenance consumer education program, which must include information on tire inflation pressure, alignment, rotation, and treadwear to maximize fuel efficiency, safety and durability of replacement tires.

C. Proposal

We solicit comment on all aspects of this proposal, including the rolling resistance test procedure, the rating system and label graphic, and the requirements for tire manufacturers and tire retailers for reporting and disseminating information. Specific areas where we request comments are identified elsewhere in this preamble and in the PRIA. Based on public comments and other information, including new data and analysis, the requirements and specifications in the final rule could differ from the specific ones proposed in this document.

1. Test Procedures

This document proposes to require tire manufacturers to rate the fuel efficiency of their tires using a test procedure currently under development by the International Organization for Standardization (ISO), ISO 28580: *Tyre Rolling Resistance measurement method—Single point test and measurement result correlation—Designed to facilitate international cooperation and, possibly, regulation building.* The ISO standard is currently in Final Draft International Standard (FDIS) stage, and is expected to be balloted and finalized by October 2009. Based on this timeline, the agency expects this test procedure to be finalized before publication of the final rule.[10] NHTSA is proposing to specify the use of the finalized ISO 28580 test procedure. The agency is also seeking

[6] Previous attempts to establish a national tire fuel efficiency program can be found in proposed amendments to various energy bills in prior years. *See e.g.,* S. Amdt. 3083, 108th Cong., 150 Cong. Rec. S4710 (2004) (proposing to amend S. 150); S. Amdt. 1470, 108th Cong., 149 Cong. Rep. S10707 (2003) (proposing to amend S. 14). These amendments proposed regulating the fuel efficiency of tires in addition to a tire fuel efficiency grading system and consumer information program, and were not adopted.

[7] Notice of Upcoming Joint Rulemaking To Establish Vehicle GHG Emissions and CAFE Standards; Notice of Intent To Conduct a Joint Rulemaking, 74 FR 24007 (May 22, 2009).

[8] *Id.* at 24008.

[9] *Id.* at 24009.

[10] If the ISO 28580 test procedure is not a finalized by the time of publication of this notice, interested parties may obtain a copy of the draft by contacting Mr. Joe Pacuit, U.S. Technical Advisory Group (TAG) Secretariat to Technical Committee (TC) 31, *Tyres, rims and valves.* Mr. Pacuit can be reached by telephone at (303) 666–8121.

comment on the use of other test procedures as described in section IV of this notice.

The choice of which test procedure to specify for measuring rolling resistance is important because measuring rolling resistance requires precise instrumentation, calibration, speed control and equipment alignment for repeatable results. As explained in more detail in this notice, agency research shows that all of the available test procedures could meet these requirements. However, the ISO 28580 test method is unique in that it specifies a procedure to correlate results between laboratories and test equipment, which our research shows is a significant source of variation. Because other established test methods lack such a procedure, NHTSA would have to develop a new procedure to address this variation before any of those test methods could be considered. Further, the ISO 28580 test procedure is the specified test method in the proposed European Union Directive, allowing manufacturers to do one test to determine ratings for both proposed regulations.

As for the safety and durability ratings, due to the statutory timeline within which this rulemaking must be completed, NHTSA is proposing to use traction and treadwear test procedures that are already specified under another tire rating system, the uniform tire quality grading standards (UTQGS).[11] The agency has been examining other metrics for safety and durability, as well as possible correlations between tire fuel efficiency and wet and dry traction, indoor and outdoor treadwear, and vehicle fuel economy.[12]

2. Proposed Rolling Resistance Rating Metric

We are proposing to base a tire's fuel efficiency rating on rolling resistance force (RRF) as measured by the ISO 28580 test procedure. This is in contrast to basing a fuel efficiency rating on rolling resistance coefficient (RRC), or RRF divided by load. The agency is aware that the proposed European tire fuel efficiency rating system specifies tire ratings based on RRC.

NHTSA is proposing to base the rolling resistance rating on the RRF metric because such a rating would provide more discrimination among different tires throughout the system, and thus more information to consumers, than a rating based on RRC. RRF translates more directly to the fuel required to move a tire, and based on the goals of EISA, appears to be a more appropriate metric.

3. Proposed Label

To convey information to consumers, this document proposes a label, which contains an individual tire's ratings for fuel efficiency (*i.e.,* rolling resistance), safety (*i.e.,* traction), and durability (*i.e.,* treadwear), and which is similar to a ratings label that tested well in consumer research conducted by NHTSA. NHTSA conducted focus group studies in which it presented several labels using different graphics and scales to relay the ratings. Figure 1 shows the ratings label that NHTSA is proposing in today's notice. The graphic shows all the ratings on a scale of 0 to 100, with 100 being the best rating. Consumers expressed an understanding of this 0 to 100 scale, and reacted positively to the red and green shading, with red indicating lower/worse ratings and green indicating higher/better ratings.[13] Other graphics presented in NHTSA's consumer research are discussed in section VI.B.3 of this notice.

NHTSA is seeking comment on an alternative graphic for the traction rating scale because consumers expressed some confusion with the graphic as presented. The cloud in the symbol for traction (representing the source of the rain drops) was confusing for some consumers who could not make out what it was or thought it was a cowboy hat. NHTSA is aware that the consumers may not fully understand the meaning of certain points on the ratings scale and is taking steps, with this rule, to help to increase understanding. NHTSA is seeking comment on how that task might best be accomplished, including with changes to the label itself.

For the purposes of the final rule, the agency is also considering the concept of a combined rating of some sort, which would convert all three benefit metrics into one overall rating. The advantage of such a system for tire performance ratings would be that it would simplify the ratings, potentially relieving consumers of the task of weighing the ratings for three different metrics for one tire against the three ratings for another tire. At the same time, if the single combined rating were presented to the exclusion of individual ratings for each metric, it would obscure the relative performance of individual components that might carry different priorities with different consumers. As discussed in detail below in section VI.A.4, an example of such a system might be expressed as average overall cost per mile. As explained in greater detail later in this notice, the agency seeks comments as to whether such a combined rating could be developed and, if so, should be adopted in the final rule and implemented. The agency seeks comments on the relative advantages and disadvantages of a single combined rating, the three rating system in our proposal, and a third approach combining the first two approaches.

[11] *See* 49 CFR 575.104 (2008).

[12] NHTSA's Phase 2 research tested 15 models of replacement tires, as well as the original equipment tires on a fuel economy test vehicle, to examine possible correlations between tire rolling resistance levels and vehicle fuel economy as measured on a dynometer, wet and dry traction, and indoor and outdoor treadwear. *See* National Highway Traffic Safety Administration, NHTSA Tire Rolling Resistance Rating System Test Development Project: Phase 2—Effects of Tire Rolling Resistance Levels on Traction, Treadwear, and Vehicle Fuel Economy (February 2009). This Phase 2 research report will be placed in the docket.

[13] Today's proposed regulation specifies the colors on the far ends of the ratings scales as ''primary red'' (for lowest/worst rating box) and ''primary green'' (for the highest/best rating box). An example of the proposed label in color can be found in the docket for this rulemaking and on NHTSA's Web site, *http://www.nhtsa.gov*. Click on the link to this notice, which will appear under ''What's New, Latest Updates, and Features on Our Site'' (towards the bottom of the main page).

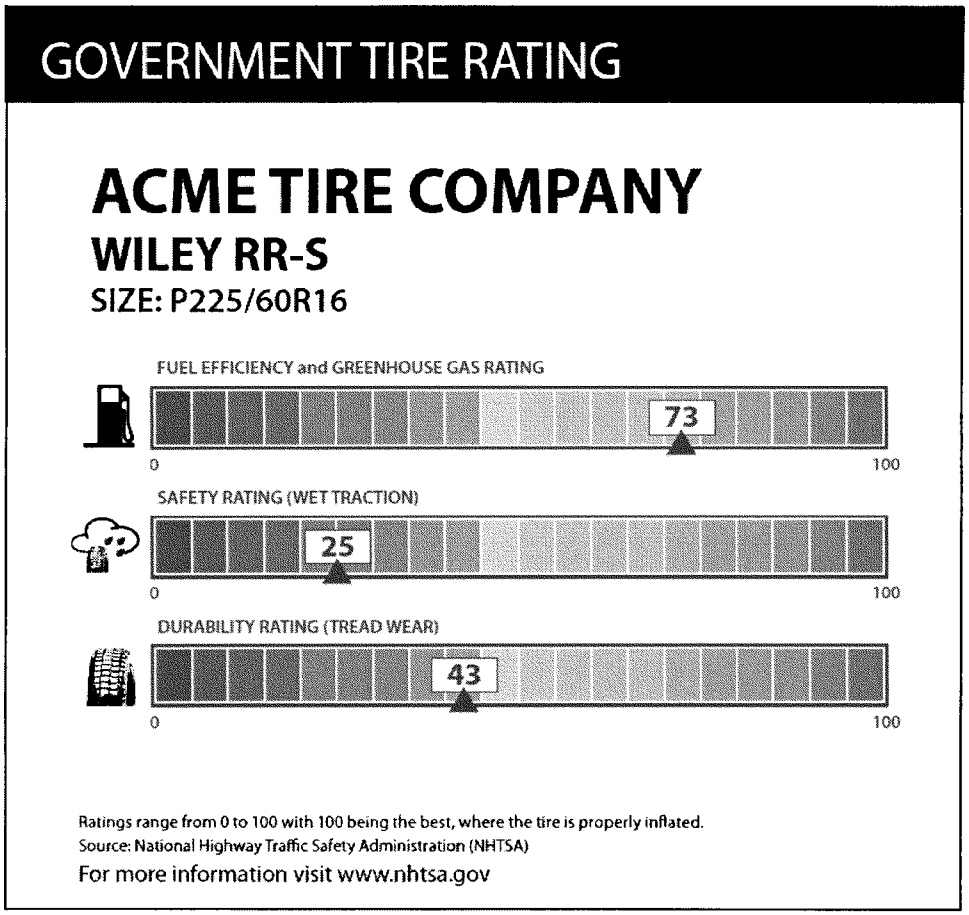

Figure 1. Proposed Rating System Label

4. Proposed Information Dissemination and Reporting Requirements for Tire Manufacturers and Tire Retailers

For tire manufacturers, NHTSA is proposing that manufacturers be required to report various data to the agency. This is necessary both for enforcement of the rating system, and for development of NHTSA's tire fuel efficiency Web site, which will contain a database of tire information with a calculator tool that allows easy comparison of fuel savings between various replacement tires.

Regarding labeling, we are proposing to require tire manufacturers to print the tire fuel efficiency graphic (Figure 1) in color along with any other information manufacturers include on an existing paper label on the tire.[14] At the manufacturer's option they could also meet the labeling requirement by displaying the tire fuel efficiency rating graphic as a separate label in full color.

As for requirements for tire retailers, we are proposing a requirement that the paper label containing the new rating information must remain on the tire until the sale of the tire. The label refers consumers to the agency's Web site for further information about the ratings. We are further proposing a requirement that tire retailers must display a poster that NHTSA would print and distribute to them which would explain the rating system and encourage consumers to compare ratings across tires.

In addition, for tire manufacturers and retailers that maintain a Web site, the agency is proposing to require those Web sites to link to NHTSA's comprehensive tire Web site we will be developing as part of the national tire maintenance consumer education program. The agency also seeks comments on any other information dissemination requirements that would ensure that easy-to-understand information is conveyed in a way that is most likely to impact consumers' decisions and, thus, affect their behavior and save them and our nation fuel and money.

5. Consumer Education Program

This document identifies and seeks comment on various ways that NHTSA plans to implement a consumer education program to inform consumers about the effect of tire properties and tire maintenance on vehicle fuel efficiency, safety, and durability. All tires require proper inflation and maintenance to achieve their intended levels of energy efficiency, safety, wear, and operating performance. NHTSA has previously addressed the importance of proper tire inflation to fuel efficiency, treadwear, and safety in various public service campaigns. Although NHTSA has mandated tire pressure monitoring systems (TPMSs) be installed on new motor vehicles,[15] a TPMS is not a substitute for proper tire maintenance. Motorists must be alerted to the fact that even small losses in inflation pressure

[14] Manufacturers are required to print UTQGS information on a paper label pursuant to 49 CFR 575.104(d)(1)(B). Many manufacturers include other information on this paper label as well. Note that NHTSA uses the term "paper label" in the colloquial sense; many labels on tires are actually made of plastic.

[15] *See* 70 FR 18136 (April 5, 2005); Docket No. NHTSA–2005–20586–1.

can reduce tire treadwear life, fuel efficiency, and operating performance.[16]

Some of NHTSA's ideas for consumer education include informational posters or brochures that NHTSA would distribute at trade shows and other events, and which tire retailers could display at the point of sale and a centralized, expansive government Web site on tires containing a database of all tire rating information. NHTSA is also planning to develop a comparative calculator that would show the amount of money a consumer would save annually or over the estimated lifetime of the tires of varying fuel efficiency ratings. Using the calculator, a consumer could select tires to compare, enter the fuel economy of their vehicle (miles per gallon or mpg) and the average number of miles they drive each year and even the dollar amount they are paying for fuel and get a calculation of differences in fuel usage and/or money saved for the tires under comparison.

Finally, NHTSA plans to develop and form new partnerships to distribute educational messages about tire fuel efficiency and tire maintenance. NHTSA will seek to partner with any interested tire retailers, State or local governments, as well as manufacturers who share NHTSA's goal of promoting the importance of proper tire maintenance. NHTSA will also seek to partner with universities and high schools that may wish to educate students regarding tire fuel efficiency or proper tire maintenance. These various innovative tools and education measures will assist consumers in making better-informed tire purchasing and maintenance decisions.

D. Costs and Benefits

The annual cost of NHTSA's proposal is estimated to be between $18.9 and $52.8 million. This includes testing costs of $22,500, reporting costs of around $113,000, labeling costs of around $9 million, costs to the Federal government of $1.28 million, and costs of between $8.4 and $42 million to improve tires. In addition, NHTSA anticipates one-time costs of around $4 million, including initial testing costs of $3.7 million and reporting start-up costs of $280,000.

It is hoped that the proposed rule will have benefits in terms of fuel economy, safety, and durability. At the very least, the proposed rule should enable consumers to make more informed decisions about these variables, thus increasing benefits along dimensions that most matter to them. It is possible that the rule will help promote innovation that will benefit consumers along all three dimensions. Because the agency cannot foresee precisely how much today's proposed consumer information program would affect consumer tire purchasing behavior and cannot foresee the reduction in rolling resistance among improved tires, the PRIA estimates benefits using a range of hypothetical assumptions regarding the extent to which the tire fuel efficiency consumer information program affects the replacement tire market. Specifically, the PRIA develops estimates assuming that between 2% and 10% of targeted tires are improved and that the average reduction in rolling resistance among improved tires is between 5% and 10%. Under these hypothetical assumptions, the proposal is estimated to save 7.9–78 million gallons of fuel and prevent the emission of 76,000–757,000 metric tons of CO_2 annually. The values of the fuel savings are between $22 and $220 million at a 3 percent discount rate and between $20 and $203 million at a 7 percent discount rate.

E. Lead Time

Recognizing that the deadlines imposed by EISA indicate a desire to have information available to consumers as quickly as possible, NHTSA is proposing to require tire manufacturers to meet applicable requirements for all existing replacement tires within 12 months of the issuance of a final regulation. That is, within 12 months of the issuance of a final regulation tire manufacturers must submit required data to NHTSA on all existing replacement tires, and all replacement tires sold by the manufacturer or transferred to tire retailers must be labeled. For new tires introduced after the effective date of this rule, NHTSA is proposing to require reporting of information at least 30 days prior to introducing the tire for sale, as is currently required for UTQGS information.

Regarding the poster NHTSA is proposing to require in retailers that have a display room, the agency is proposing to make this poster available within 12 months of the issuance of a final regulation. At that time NHTSA will publish a **Federal Register** notice announcing the availability of the poster. The agency is proposing that a tire retailer must have the poster on display within 60 days of the issuance of the notice of availability in the **Federal Register**. We are proposing that a tire retailer will be able to comply with the requirement of displaying the poster either by downloading and printing it, in color and with the specifications from NHTSA's Web site, or by contacting the agency and requesting that we send the retailer a copy of the poster.

For tire retailers and tire manufacturers with an Internet presence, NHTSA is proposing that those Web sites link to NHTSA's tire Web site within 12 months of the issuance of a final regulation. NHTSA will provide the direct link to the comprehensive tire Web site in that final regulation.

II. Background

A. Contribution of Tire Maintenance and Tire Fuel Efficiency to Addressing Energy Independence and Security

1. Tire Fuel Efficiency and Rolling Resistance

Without the continual addition of energy, a vehicle will slow down. This effect is due to many forces, including aerodynamic drag, driveline losses, brake drag, and tire rolling resistance. The first three of these are vehicle properties; they will not be discussed further. Rolling resistance is the effort required to keep a given tire rolling. That is, rolling resistance is the energy loss during the continuation of rotational movement of the tire. As such, it always opposes the vehicle's longitudinal, or forward/backward, movement. Since this rolling resistance force (RRF) opposes the direction of travel of the rotating tire, it directly reduces the efficiency of a vehicle in converting the chemical energy in the fuel to motion of the vehicle. Therefore, tire rolling resistance is the most effective metric for rating the ''fuel efficiency'' of a tire.

In general, vehicle efficiency affects the conversion of chemical energy in motor fuel into mechanical energy and the transmission of energy to the axles to drive the wheels. Figure 2 illustrates the energy uses and losses for a midsize passenger car. Part of the energy supplied to the wheels of the vehicle is lost due to energy converted to heat within the structure of the tire as well as friction between the tire and the road,

[16] When a tire is under-inflated, the shape of its footprint and the pressure it exerts on the road surface are both altered. One consequence of this alteration can be a reduction in the tire's ability to transmit (or generate) braking force to the road surface. Thus, under-inflated tires may increase a vehicle's stopping distance on wet surfaces. 66 FR 38982, 38986 (July 26, 2001). Under-inflated tires also increase the rolling resistance of vehicles and, correspondingly, decrease their fuel economy. *Id.*

which creates resistance, decreasing fuel efficiency.

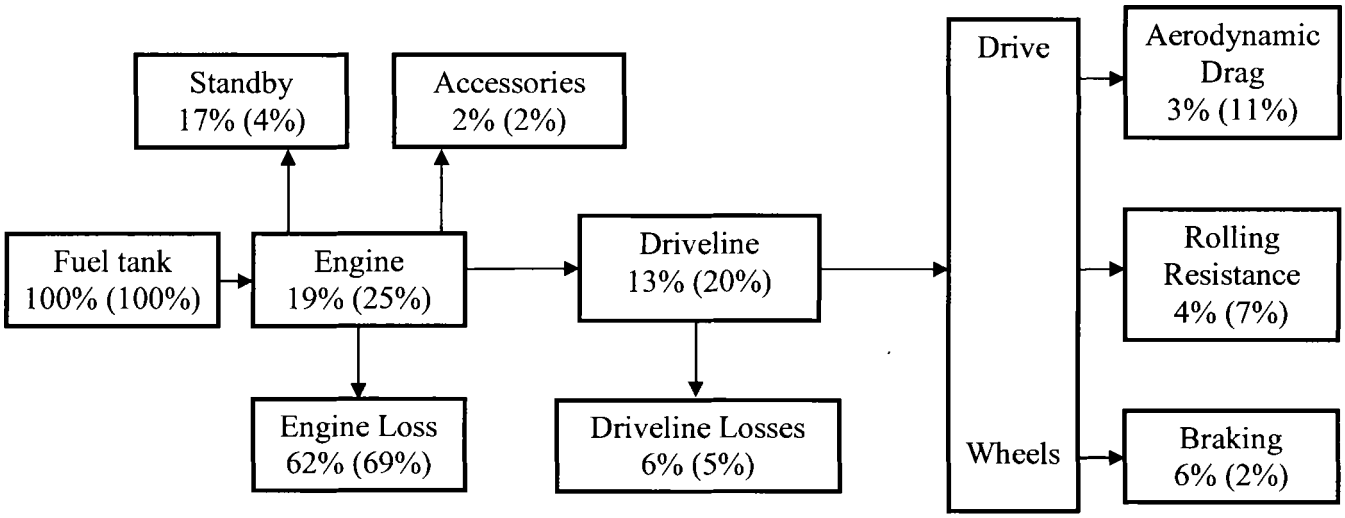

Figure 2. Uses and Losses of Fuel Energy in a Vehicle – Estimates of City and Highway Usage (Highway Figures Appear in Parentheses)[17]

A tire's rolling resistance is the energy consumed by a rolling tire, or the mechanical energy converted into heat by a tire, moving a unit distance on the roadway.[18] The magnitude of rolling resistance depends on the tire used, the nature of the surface on which it rolls, and the operating conditions—inflation pressure, load, and speed.[19]

2. Relationship Between Tire Maintenance and Tire Fuel Efficiency and Vehicle Fuel Economy

Tires with reduced inflation pressure exhibit more sidewall bending and tread shearing. This increased deformation causes increased energy loss by the flexing of the rubber. Further, tires with less than optimal inflation pressure have a larger footprint of the tire on the road, creating more contact between the tire and the road, thereby increasing rolling resistance. Therefore, properly inflated tires achieve less rolling resistance and higher fuel efficiency than under-inflated tires. Moreover, all tires require proper inflation and proper maintenance to achieve their intended levels of efficiency, safety, wear, and operating performance. Thus, a strong message urging vigilant maintenance of inflation must be a central part of communicating information on the fuel efficiency performance of tires to motorists.[20]

In addition to proper tire inflation pressure, combinations of differences in tire dimensions, design, materials, and construction features will cause tires to differ in rolling resistance as well as in many other attributes such as traction, handling, noise, wear resistance, and appearance.[21] Thus, when choosing among replacement tires, consumers choose among tires varying in price, style, and many aspects of performance, including rolling resistance, treadwear life, and traction. Every year Americans spend approximately $20 billion replacing about 200 million passenger car tires.[22] Thus, the tires consumers purchase will not only affect the handling, traction, ride comfort, and appearance of their cars, but also the fuel economy.[23]

Fuel economy improvements are a large part of ensuring a secure energy future.[24] EISA will help reduce America's dependence on oil by reducing U.S. demand for oil by setting a national fuel economy standard of at least 35 miles per gallon by 2020—which will increase fuel economy standards by 40 percent and save billions of gallons of fuel. In the near future, per the President's announcement, NHTSA and EPA intend to initiate a joint rulemaking, with NHTSA proposing CAFE standards under EPCA, as amended by EISA, and EPA proposing greenhouse gas emissions standards under the Clean Air Act.[25] This notice proposes a tire fuel efficiency rating system and consumer education program that will contribute to increases in actual on-road fuel economy achieved, even for vehicles currently in service.

Further, improving fuel economy reduces the amount of tailpipe emissions of CO_2. CO_2 emissions are directly linked to fuel consumption because CO_2 is an ultimate end product of burning gasoline. The more fuel a vehicle burns, the more CO_2 it emits. Since the CO_2 emissions are essentially constant per gallon of fuel combusted, the amount of fuel consumption per mile is directly related to the amount of CO_2 emissions per mile. Thus, improvements in fuel economy necessarily reduce tailpipe emissions of CO_2.[26] The need to take action to reduce greenhouse gas emissions, *e.g.,* motor vehicle tailpipe emissions of CO_2, in order to forestall and even mitigate climate change is well recognized.[27]

[17] *See http://www.fueleconomy.gov/feg/atv.shtml*; 2006 NAS Report, *supra* note 4, at 29.

[18] Rolling resistance is, thus, defined as energy per unit distance, which is the same units as force (Joules/meter = Newtons). However, unlike force, rolling resistance is a scalar quantity with no direction associated with it. National Highway Traffic Safety Administration, The Pneumatic Tire, DOT HS 810 561, at 477 (February 2006).

[19] *Id.*

[20] 2006 NAS Report, *supra* note 4, at 5, 97.

[21] *Id.* at 1.

[22] H.R. Rep. No. 109–537, at 3 (June 28, 2006); 2006 NAS Report, *supra* note 4, at 1.

[23] Most passenger tires are replaced every 3 to 5 years because of wear. *Id.*

[24] *See* 73 FR 24352, 24360 (May 2, 2008).

[25] Notice of Upcoming Joint Rulemaking To Establish Vehicle GHG Emissions and CAFE Standards; Notice of Intent to Conduct a Joint Rulemaking, 74 FR 24007 (May 22, 2009).

[26] *Id.* at 24356.

[27] IPCC (2007): *Climate Change 2007: Mitigation of Climate Change. Contribution of Working Group*

3. 2006 National Academy of Sciences Report

In the Consolidated Appropriations Act of 2004,[28] Congress provided funding through the USDOT/NHTSA to the National Academy of Sciences (NAS) to develop and perform a national tire fuel efficiency study and literature review.[29] The NAS was to assess the feasibility of reducing rolling resistance in replacement tires and the effects of doing so on vehicle fuel consumption, tire wear life and scrap tire generation, and tire operating performance as it relates to motor vehicle safety. Congress asked that the assessment include estimates of the effects of reductions in rolling resistance on consumer spending on fuel and tire replacement.

In April 2006, the Transportation Research Board and the Board on Energy and Environmental Systems, part of the National Academies' Division on Engineering and Physical Sciences, released Special Report 286, Tires and Passenger Vehicle Fuel Economy: Informing Consumers and Improving Performance (2006 NAS Report).[30] The 2006 NAS Report concluded that reduction of average rolling resistance of replacement tires by 10 percent was technically and economically feasible, and that such a reduction would increase the fuel economy of passenger vehicles by 1 to 2 percent, saving about 1 to 2 billion gallons of fuel per year nationwide.[31]

A reduction in the average rolling resistance of replacement tires in the vehicle fleet can occur through various means. Consumers could purchase more tires that are now available with lower rolling resistance, tire designs could be modified, and new tire technologies that offer reduced rolling resistance could be introduced. More vigilant maintenance of tire inflation pressure may further this outcome as well.[32] The 2006 NAS Report concluded that consumers, if sufficiently informed and interested, could bring about a reduction in average rolling resistance by adjusting their tire purchases and by taking proper care of their tires once in service, especially by maintaining recommended inflation pressure.[33]

The 2006 NAS Report observed that consumers currently have little, if any, practical way of assessing how tire choices can affect vehicle fuel economy. Recognizing this market failure, the Report recommended that Congress authorize and make sufficient resources available for NHTSA to prompt and work with the tire industry in gathering and reporting information on the influence of passenger tires on vehicle fuel consumption.[34] The 2006 NAS Report recognized the challenge of changing consumer preference and behavior, but recommended Congressional action nonetheless because of the potential societal benefits associated with increasing effective on-road fuel economy by even 1 to 2 percent.[35] This ambitious undertaking must begin with information concerning the tire's influence on fuel efficiency being made widely and readily available to tire buyers and sellers. The consumer tire information program mandated by EISA and proposed in today's notice begins this undertaking.

Other countries have also begun working towards increasing on-road fuel economy by reducing average rolling resistance. These countries include those of the European Union and Japan. In addition, the State of California has also initiated a program to increase vehicle fuel economy using tire efficiency ratings.

4. California

In 2001, California Senate Bill 1170 authorized the California Energy Commission (CEC) to conduct a study to investigate opportunities for increasing usage of low rolling resistance tires in California.[36] The study concluded that there was a potential for substantial vehicle fuel savings from an increase in the use of properly inflated, low rolling resistance tires. As a result of this study, in October 2003, the California State legislature adopted Assembly Bill No. 844 (AB 844),[37] which required the CEC to develop a comprehensive fuel efficient tire program.[38]

The program would consist of three phases. In the first phase, the CEC will develop a database with information on the fuel efficiency of replacement tires sold in California, develop a rating system for the energy efficiency of replacement tires, and develop a manufacturer reporting requirement for the energy efficiency of replacement tires.[39] In the second phase, the CEC will consider whether to adopt standards for replacement tires to ensure that replacement tires sold in the State are at least as energy efficient, on average, as original equipment tires.[40] In deciding whether to adopt standards, the CEC must ensure that a standard:

- Is technically feasible and cost effective;
- Does not adversely affect tire safety;
- Does not adversely affect the average life of replacement tires; and
- Does not adversely affect the State effort to manage scrap tires.[41]

If standards are adopted, the CEC will also develop consumer information requirements for replacement tires for which standards apply. In the third phase, the CEC must review and revise the program at least every three years.[42]

On June 10, 2009, the Transportation Policy Committee of the CEC conducted a workshop regarding the Energy Commission Fuel Efficient Tire Program. As part of that workshop, the CEC staff draft regulation was made public.[43] The draft regulation specifies testing and reporting requirements for manufacturers, and describes the database the CEC will maintain. The draft regulation defines a ''fuel efficient tire'' as a tire with ''a declared fuel efficiency rating value no higher than 1.15 times the lowest declared fuel efficiency rating value for all tires in its

III to the Fourth Assessment Report of the Intergovernmental Panel on Climate Change [B. Metz, O. Davidson, P. Bosch, R. Dave, and L. Meyer (eds.)]. Cambridge University Press, Cambridge, United Kingdom and New York, NY, USA.

[28] H.R. Rep. No. 108–401, at 971 (Nov. 25, 2003) (Conf. Rep.).

[29] Ultimately the task was given to the Committee for the National Tire Efficiency Study of the Transportation Research Board, a division of the National Research Council that is jointly administered by the National Academy of Sciences, the National Academy of Engineering, and the Institute of Medicine.

[30] Transportation Research Board Special Report 286, Tires and Passenger Vehicle Fuel Economy, National Research Council of the National Academies (2006). A copy of this report will be placed in the docket.

[31] *Id.* at 2–3.

[32] *Id.* at 3.

[33] *Id.*

[34] *Id.* at 2, 4.

[35] *Id.*

[36] *See* Cal. Pub. Res. Code §§ 25000.5, 25722–25723 (2009); 2001 Cal. Legis. Serv. Ch. 912 (S.B. 1170) (West).

[37] *See* Cal. Pub Res. Code §§ 25770–25773; 2003 Cal. Legis. Serv. Ch. 645 (A.B. 844) (West).

[38] Specifically, AB 844 required the State Energy Resources Conservation Board ''to adopt, on or before July 1, 2007, and implement, no later than July 1, 2008, a replacement tire fuel efficiency program of statewide applicability for replacement tires for passenger cars and light-duty trucks, that is designed to ensure that replacement tires sold in the State are at least as energy efficient, on average, as the tires sold in the State as original equipment on those vehicles.'' Cal. Pub. Res. Code § 25772.

[39] *See id.* at § 25771.

[40] *See id.* at § 25772. EISA does not provide NHTSA with the authority to directly regulate the fuel efficiency of tires. EISA's mandates to NHTSA regarding replacement tire fuel efficiency relate only to developing ratings and disseminating information to consumers.

[41] *See id.* at § 25773.

[42] *Id.*

[43] *See http://www.energy.ca.gov/transportation/tire_efficiency/documents/index.html#061009* (last accessed June 15, 2009).

combined tire size designation and load index.'' [44]

5. European Union

Europe is approaching the issue of tire fuel efficiency from two directions. On March 10, 2009, the European Parliament and the Council of the European Union adopted the European Commission Proposal for a regulation concerning new type-approval requirements for the general safety of motor vehicles.[45] One of the new requirements in this regulation will gradually prohibit original equipment and replacement tires with a rolling resistance coefficient (RRC) above certain levels beginning November 1, 2012.

On April 22, 2009, the European Parliament adopted another Commission proposal, ''Fuel Efficiency: Labeling of Tyres.'' The new regulation will require original equipment and replacement tires to be rated for rolling resistance, wet grip and noise.[46] The rolling resistance rating is determined using the same test procedure as in ISO 28580: *Tyre Rolling Resistance measurement method—Single point test and measurement result correlation—Designed to facilitate international cooperation and, possibly, regulation building.* The ratings must be provided to consumers in a label on the tire, and also in technical promotional literature, while the measured value for RRC as determined for the type-approval regulation must be molded onto the tire sidewall.

The label design is the same A to G scale as that used to rate the energy efficiency of household appliances in Europe.[47] It will apply to tires fitted to passenger cars as well as light and heavy duty vehicles. Tire manufacturers are required to have a ''fuel savings calculator'' on their Web sites, while the European Commission is required to establish a ''EU tyre labeling Web site'' by September 2010. The new regulation will go into effect in 2012, but tire manufacturers are encouraged to comply earlier.

6. Japan

In late 2008 the Ministry of Economy, Trade and Industry (METI) and the Ministry of Land, Infrastructure, Transport and Tourism (MLIT) announced a decision to establish a fuel efficient tire program.[48] The stated objectives are to include standards for measuring rolling resistance, providing information to consumers, and consideration of ways to ensure proper tire pressure management (either through tire pressure monitoring systems or consumer education). Japan has been participating in the development of ISO 28580.

B. Energy Independence and Security Act of 2007 Mandated Consumer Tire Information Program

The legislation that eventually became section 111 of EISA mandating the tire fuel efficiency consumer education program was originally introduced by itself in the U.S. House of Representatives as H.R. 5632 [49] following the recommendations in the 2006 NAS Report.[50] The bill was introduced on June 16, 2006, and on June 28, 2006, the House Committee on Energy and Commerce reported on a slightly amended version of the bill.[51] It was never acted upon by the 109th Congress, but it was inserted into a comprehensive energy bill as the 110th Congress began to develop it in May 2007.

The Motor Vehicle Information and Cost Savings Act, which was enacted in 1972, mandated a Federal program to provide consumers with accurate information about the comparative safety and damageability of passenger cars. These requirements were codified in Chapter 323 of title 49 of the United States Code (U.S.C.). EISA added section 32304A to title 49 U.S.C., Chapter 323, which gives authority to the Department of Transportation (DOT) to establish a new consumer tire information program to educate consumers about the effect of tires on automobile fuel efficiency, safety, and durability. The DOT has delegated authority to NHTSA at 49 CFR 1.50.

We have summarized below the requirements of title 49 U.S.C. 32304A, the consumer tire information program provision enacted by EISA. We request comment on how effectively our proposal is likely to be in achieving the goals of EISA. For example, what methodologies and assumptions should be used in establishing and implementing the new rating system? What is the most effective way to engage and educate consumers regarding the proposed rating system?

1. Tires Subject to the Consumer Information Program

The national tire fuel efficiency consumer information program mandated by EISA and proposed in this notice is applicable ''only to replacement tires covered under section 575.104(c) of title 49, Code of Federal Regulations'' (CFR), as that regulation existed on the date of EISA's enactment.[52] Section 575.104 of title 49 CFR is the Federal regulation that requires motor vehicle and tire manufacturers and tire brand name owners to provide information indicating the relative performance of passenger car tires in the areas of treadwear, traction, and temperature resistance. This section of NHTSA's regulations specifies the test procedures to determine uniform tire quality grading standards (UTQGS), and mandates that these standards be molded onto tire sidewalls.

Title 49 CFR, section 575.104 applies only to ''new pneumatic tires for use on passenger cars * * * [but] * * * does not apply to deep tread, winter-type snow tires, space-saver or temporary use spare tires, tires with nominal rim diameters of 12 inches or less, or to limited production tires as defined in [49 CFR 575.104(c)(2)].'' [53] Accordingly, today's proposed tire fuel efficiency consumer information program applies only to replacement passenger car tires with the same exclusions as the UTQGS regulation.

2. Mandate To Create a National Tire Fuel Efficiency Rating System

EISA requires NHTSA to ''promulgate rules establishing a national tire fuel efficiency consumer information program for replacement tires designed for use on motor vehicles to educate consumers about the effect of tires on automobile fuel efficiency, safety, and

[44] Publication #CEC–600–2009–010–SD (posted May 29, 2009), available at *http://www.energy.ca.gov/2009publications/CEC-600-2009-010/CEC-600-2009-010-SD.PDF* (last accessed June 15, 2009).

[45] *See http://www.europarl.europa.eu/sides/getDoc.do?pubRef=-//EP//TEXT+TA+P6-TA-2009-0092+0+DOC+XML+V0//EN&language=EN#top* (last accessed Mar. 11, 2009).

[46] *See http://www.europarl.europa.eu/oeil/FindByProcnum.do?lang=2&procnum=COD/2008/0221* (last accessed Mar. 4, 2009). Mandatory requirements are also proposed to begin in October 2010 for wet grip and external rolling noise.

[47] *See* Council Directive 1992/75/EEC, 1992 O.J. (L 297) 16–19 (on the indication by labeling and standard product information of the consumption of energy and other resources by household appliances).

[48] *See http://www.meti.go.jp/english/press/data/20081226_01.html* (last accessed Mar. 10, 2009).

[49] H.R. 5632, 109th Cong. (2d Sess. 2006).

[50] Previous attempts to establish a national tire fuel efficiency program can be found in proposed amendments to various energy bills in prior years. *See e.g.,* S. Amdt. 3083, 108th Cong., 150 Cong. Rec. S4710 (2004) (proposing to amend S. 150); S. Amdt. 1470, 108th Cong., 149 Cong. Rep. S10707 (2003) (proposing to amend S. 14). These amendments proposed regulating the fuel efficiency of tires in addition to a tire fuel efficiency grading system and consumer information program, and were not adopted.

[51] *See* H.R. Rep. No. 109–537 (2006).

[52] 49 U.S.C. 32304A(a)(3).

[53] 49 CFR 575.104(c)(1).

durability.'' [54] EISA specifies that the regulations establishing the program are to be promulgated not later than December 19, 2009.[55]

Section 111 of EISA specifically mandates ''a national tire fuel efficiency rating system for motor vehicle replacement tires to assist consumers in making more educated tire purchasing decisions.'' [56] However, NHTSA may ''not require permanent labeling of any kind on a tire for the purpose of tire fuel efficiency information.'' [57]

The only Committee Report commenting on the legislation that eventually became section 111 of EISA explained that need for this program was established by the 2006 NAS Report, which concluded that if consumers were sufficiently informed and interested, they could bring about a reduction in average rolling resistance (and thus an increase in average on-road fuel economy) by adjusting their tire purchases and by taking proper care of their tires once in service.[58] Thus, NHTSA reviewed conclusions and recommendations in the 2006 NAS Report regarding how best to inform consumers using a tire fuel efficiency rating system.

Specifically, the 2006 NAS Report concluded that rolling resistance measurement of new tires can be informative to consumers, especially if they are accompanied by reliable information on other tire characteristics such as treadwear rate and traction.[59] The 2006 NAS Report further stated that consumers benefit from the ready availability of easy-to-understand information on all major attributes of their purchases, and that tires are no exception. A tire's influence on vehicle fuel is an attribute that is likely to be of interest to many tire buyers.[60] NHTSA has attempted to keep these key observations in mind in the development of this proposal.

3. Communicating Information to Consumers

EISA specifies that this rulemaking to establish a national tire fuel efficiency consumer information program must include ''requirements for providing information to consumers, including information at the point of sale and other potential information dissemination methods, including the Internet.'' [61] While there is little to no legislative history of EISA itself, the legislation that eventually became section 111 of EISA was originally introduced in June 2006 with this identical requirement.[62]

On June 28, 2006, the House Committee on Energy and Commerce reported on a slightly amended version of the bill and noted that ''[t]he bill [ ] would require tire retailers to provide consumers with information on the tire fuel efficiency rating of motor vehicle tires at the point of sale.'' [63] Thus, NHTSA believes that the suggestion of point of sale requirements indicates that Congress intended NHTSA's authority to establish information dissemination requirements to be broad enough to include requirements for both tire manufacturers, which by statute includes importers,[64] and tire dealers/retailers and distributors.

4. Specification of Test Methods

Section 111 of EISA also mandates that this rulemaking to establish a national tire fuel efficiency consumer information program include ''specifications for test methods for manufacturers to use in assessing and rating tires to avoid variation among test equipment and manufacturers.'' [65] *See* section IV of this notice for a discussion of NHTSA's research and rationale regarding today's proposal of ISO 28580.

We note that the 2006 NAS Report, the recommendations from which formed the basis for the legislation that became section 111 of EISA, indicated that ''[a]dvice on specific procedures for measuring and rating the influence of individual passenger tires on fuel economy and methods of conveying this information to consumers [was] outside the scope of this study.'' [66] Accordingly, after publication of the 2006 NAS Report and in anticipation of Congressional legislation based off its recommendations, NHTSA embarked on a large-scale research project in July 2006 to evaluate existing tire rolling resistance test methods.[67]

5. Creating a National Consumer Education Program on Tire Maintenance

Section 111 of EISA further directs NHTSA to establish in this rulemaking ''a national tire maintenance consumer education program including, information on tire inflation pressure, alignment, rotation, and treadwear to maximize fuel efficiency, safety, and durability.'' [68] NHTSA already has some information regarding tire maintenance on its *http://safercar.gov* Web site.[69]

The 2006 NAS Report, the recommendations from which formed the basis for the legislation that became section 111 of EISA, noted that consumers benefit from the ready availability of easy-to-understand information on all major attributes of their purchases, and that replacement tires' influence on vehicle fuel economy is an attribute that is likely to be of interest to many tire buyers.[70] NHTSA has focused on these principles in developing today's proposal and seeks comment on the best way to make the information in this program both of interest to consumers and easy to understand. The 2006 NAS Report further noted that ''industry cooperation is essential in gathering and conveying tire performance information that consumers can use in making tire purchases.'' [71] NHTSA agrees that cooperation with the tire manufacturer and tire retailer industries, as well as other interested parties will be vital to the success of this program. The agency has held initial consultations with various groups of industry and the environmental community, as well at

[54] 49 U.S.C. 32304A(a)(1).

[55] EISA was signed into law on December 19, 2007. EISA specifies that ''[n]ot later than 24 months after the date of enactment * * * [NHTSA] shall, after notice and opportunity for comment, promulgate rules establishing a national tire fuel efficiency consumer information program for replacement tires designed for use on motor vehicles to educate consumers about the effect of tires on automobile fuel efficiency, safety, and durability.'' 49 U.S.C. 32304A(a)(1).

[56] 49 U.S.C. 32304A(a)(2)(A).

[57] *Id.* at § 32304A(d).

[58] H.R. Rep. No. 109–537, at 3 (2006).

[59] 2006 NAS Report, *supra* note 4, at 4. The 2006 NAS Report specifically noted that ''[i]deally, consumers would have access to information that reflects a tire's effect on fuel economy averaged over its anticipated lifetime of use, as opposed to a measurement taken during a single point in the tire's lifetime, usually when it is new.'' *Id.* However, ''[n]o standard measure of lifetime tire energy consumption is currently available, and the development of one deserves consideration. Until such a practical measure is developed, rolling resistance measurements of new tires can be informative to consumers * * *'' *Id.*

[60] 2006 NAS Report, *supra* note 4, at 4.

[61] 49 U.S.C. 32304A(a)(2)(B).

[62] *See* H.R. 5632, 109th Cong. (2d Sess. 2006).

[63] *See* H.R. Rep. No. 109–537, at 5 (2006).

[64] *See* 49 U.S.C. 32101(5) (defining manufacturer as ''a person (A) manufacturing or assembling passenger motor vehicles or passenger motor vehicle equipment; or (B) importing motor vehicles or motor vehicle equipment for resale.''). For purposes of the statute, the importer of any tire is a manufacturer. An importer is responsible for every tire it imports and is subject to civil penalties in the event of any violations. The U.S. Customs and Border Protection may deny entry at the port to items that do not conform to applicable requirements.

[65] 49 U.S.C. 32304A(a)(2)(C).

[66] 2006 NAS Report, *supra* note 4, at 4.

[67] *See* NHTSA Tire Rolling Resistance Rating System Test Development Project: Phase 1—Evaluation of Laboratory Test Protocols (October 2008). The research reports from this Phase 1 research will be placed in the docket.

[68] 49 U.S.C. 32304A(a)(2)(D).

[69] *See generally http://www.safercar.gov/portal/site/safercar/menuitem.13dd5c887c7e1358fefe0a2f35a67789/?vgnextoid=0e0aaa8c16e35110VgnVCM1000002fd17898RCRD.*

[70] 2006 NAS Report, *supra* note 4, at 96.

[71] *Id.*

other Government agencies, to seek their views.

6. Consultation in Setting Standards

Section 111 of EISA provides that NHTSA is to consult with the Department of Energy (DOE) and Environmental Protection Agency (EPA) ''on the means of conveying tire fuel efficiency consumer information.'' [72] One of the recommendations of the 2006 NAS Report, which formed the basis for the legislation that became section 111 of EISA, stated that NHTSA should consult with the EPA ''on means of conveying the information and ensure that the information is made widely available in a timely manner and is easily understood by both buyers and sellers.'' [73] NHTSA and EPA will fulfill the statutory consultation requirement in a way that best serves the goals of EISA.

NHTSA consulted with representatives of DOE, EPA, and the Federal Trade Commission [74] who work in consumer information and rating programs. These agencies provided feedback on NHTSA's draft proposal which included valuable comments and insight based on their experiences communicating information on the energy efficiency of consumer products.

7. Application With State and Local Laws and Regulations

Section 111 of EISA contains both an express preemption provision and a savings provision that address the relationship of the national tire fuel efficiency consumer information program to be established under that section with State and local tire fuel efficiency consumer information programs. Section 111 provides:

> Nothing in this section prohibits a State or political subdivision thereof from enforcing a law or regulation on tire fuel efficiency consumer information that was in effect on January 1, 2006. After a requirement promulgated under this section is in effect, a State or political subdivision thereof may adopt or enforce a law or regulation on tire fuel efficiency consumer information enacted or promulgated after January 1, 2006, if the requirements of that law or regulation are identical to the requirement promulgated under this section. Nothing in this section shall be construed to preempt a State or political subdivision thereof from regulating the fuel efficiency of tires (including establishing testing methods for determining compliance with such standards) not otherwise preempted under this chapter.[75]

NHTSA seeks public comment on the scope of Section 111 generally, and in particular on whether, and to what extent, Section 111 would or would not preempt tire fuel consumer information regulations that the administrative agencies of the State of California may promulgate in the future pursuant to California's Assembly Bill 844.

8. Compliance and Enforcement

Section 111 of EISA added a new sub-provision to 49 U.S.C. 32308 (General prohibitions, civil penalty, and enforcement) which reads as follows:

> Any person who fails to comply with the national tire fuel efficiency information program under section 32304A is liable to the United States Government for a civil penalty of not more than $50,000 for each violation.

9. Reporting to Congress

EISA also requires that NHTSA conduct periodic assessments of the rules promulgated under this program ''to determine the utility of such rules to consumers, the level of cooperation by industry, and the contribution to national goals pertaining to energy consumption.'' [76] NHTSA must ''transmit periodic reports detailing the findings of such assessments to the Senate Committee on Commerce, Science, and Transportation and the House of Representatives Committee on Energy and Commerce.'' [77]

III. Which Tires Must Be Rated?

A. Passenger Car Tires

As explained above in section II.B.1 of this notice, EISA specifies that the tire fuel efficiency requirements are to ''apply only to replacement tires covered under [NHTSA's UTQGS regulation].'' [78] Title 49 CFR, section 575.104 applies only to ''new pneumatic tires [79] for use on passenger cars'' with some exclusions of particular types of tires.[80] All terms in 49 CFR part 575 are as defined by statute or in 49 CFR part 571, *Federal Motor Vehicle Safety Standards* (FMVSS).[81] Section 571.139 of title 49 CFR (or FMVSS No. 139, *New Pneumatic Radial Tires for Light Vehicles*) defines ''passenger car tire'' as ''a tire intended for use on passenger cars, multipurpose passenger vehicles, and trucks, that have a gross vehicle weight rating (GVWR) of 10,000 pounds or less.''

Accordingly, today's proposed tire fuel efficiency consumer information program applies only to replacement passenger car tires, or tires intended for use on passenger cars, multipurpose passenger vehicles, and trucks, that have a GVWR of 10,000 pounds or less. These tires often have a tire size designation beginning with a ''P,'' indicating that they are for use on passenger cars. However, they may be designated without the P, sometimes referred to as ''hard metric'' sizes. Note that even though they are classified as light trucks by NHTSA, many smaller sport utility vehicles (SUVs), pickups, and vans are equipped with passenger car tires.[82] The kinds of light- and medium-duty trucks used in commercial service, including full-size pickups and vans, have a GVWR of more than 6,000 pounds. These vehicles are usually equipped with tires having the letters ''LT'' molded into the sidewall.[83] EISA excludes replacement LT tires from the tire fuel efficiency consumer information program.[84]

NHTSA's research included testing of LT tires even though we are not authorized to regulate them through this tire fuel efficiency consumer information program because NHTSA's Phase 1 research was initiated in July 2006, subsequent to the release of the 2006 NAS Report.[85] LT tires represented approximately 16.7 percent of the U.S.

---

[72] 49 U.S.C. 32304A(b). In addition, Executive Order No. 13432 provides that a Federal agency undertaking a regulatory action that can reasonably be expected to directly regulate emissions, or to substantially and predictably affect emissions, of greenhouse gasses from motor vehicles, shall act jointly and consistently with other agencies to the extent possible and to consider the views of other agencies regarding such action.

[73] 2006 NAS Report, *supra* note 4, at 4.

[74] The Federal Trade Commission (FTC) developed the EnergyGuide label to enable consumers to compare the energy use of different models as consumers shop for an appliance. *See http://www.ftc.gov/bcp/edu/pubs/consumer/homes/rea14.shtm* (last accessed June 3, 2009). Section 321(b) of EISA directs the FTC to consider the effectiveness of current lamp disclosures and to consider whether alternative labeling disclosures would be more effective in helping consumers make purchasing decisions.

[75] 49 U.S.C. 32304A(e).

[76] 49 U.S.C. 32304A(c).

[77] *Id.*

[78] 49 U.S.C. 32304A(a)(3).

[79] The term pneumatic tires is a broad one that essentially means air-filled tires. Section 571.139 of title 49 CFR (or FMVSS No. 109, *New Pneumatic Radial Tires for Light Vehicles*) defines pneumatic tire broadly as ''a mechanical device made of rubber, chemicals, fabric and steel or other materials, which, when mounted on an automotive wheel, provides the traction and contains the gas or fluid that sustains the load.'' By contrast, a non-pneumatic tire is a ''mechanical device which transmits * * * the vertical load and tractive forces from the roadway to the vehicle, generates the tractive forces that provide the directional control of the vehicle and does not rely on the containment of any gas or fluid for providing those functions.'' 49 CFR 571.129, *New Non-pneumatic Tires for Passenger Cars.*

[80] 49 CFR 575.104(c)(1).

[81] 49 CFR 575.2, *Definitions.*

[82] 2006 NAS Report, *supra* note 4, at 14.

[83] *Id.*

[84] 49 U.S.C. 32304A(a)(3).

[85] Specifically, of the 25 different models of tires tested in NHTSA's Phase 1 research, 16 tire models were passenger, 9 were light truck tire models; one of the passenger car tires was the ASTM F2493–06 P225/60R16 97S Standard Reference Test Tire (SRTT).

replacement tire market in 2007,[86] and the LT tires studied had nearly twice the rolling resistance as the group of passenger car tires studied.[87] NHTSA notes that it expects test data to be available for many LT tires, as these tires are covered by the Europe and California programs. Nothing in this regulation would prohibit manufacturers from voluntarily rating or reporting data for LT or other excluded tires, as required for covered tires.

B. Replacement Tires

Another issue is how to define ''replacement tire'' for purposes of this program. While most UTQGS requirements apply to all passenger car tires, whether sold as original equipment with a new automobile (OE tires) or as a replacement tire, some apply only to replacement tires. For example, the requirement for a paper label on the tire tread excludes tires ''sold as original equipment on a new vehicle.'' [88] NHTSA is proposing a definition of replacement tires for the purposes of the tire fuel efficiency consumer information program using this language. The agency believes the definition needs to be in terms of the actual sale of the tire, not the intention when manufactured. NHTSA understands that some tires that are manufactured for the OE tire market could be sold as replacement tires, either because the vehicle manufacturer does not purchase all that are manufactured for that purpose, or because the vehicle manufacturer sells excess stock.

C. Tires Within a Tire Model

Tire manufacturers may have different brands, and within each brand different tire models (or tire lines),[89] and tire models are often available in different sizes. For example, Michelin is the manufacturer for the Michelin, BFGoodrich and Uniroyal brands. A popular Michelin brand model is the Pilot, but other models include the Energy or the HydroEdge. And each of these brands is available in different tire sizes, for example a 185/65R14 or a 215/70R15. *See* Figure 3. The model of tire (Pilot) then may be available in several performance levels. In the case in Figure 3 there are 3 different speed ratings for the Pilot model. Performance ratings may also include All-Season, Competition, Touring, Grand Touring, *etc.* Each of these tires may also have different treadwear, traction, temperature and warranty ratings. These models are then available in different tire sizes, for example an Exalto A/S is available in 185/60R14 to 235/40R17. Whereas a Pilot Sport A/S Plus is available in sizes 205/55R16 to 245/45R20, and the Pilot Sport PS2 is available in sizes 225/55R16 to 295/25R22.

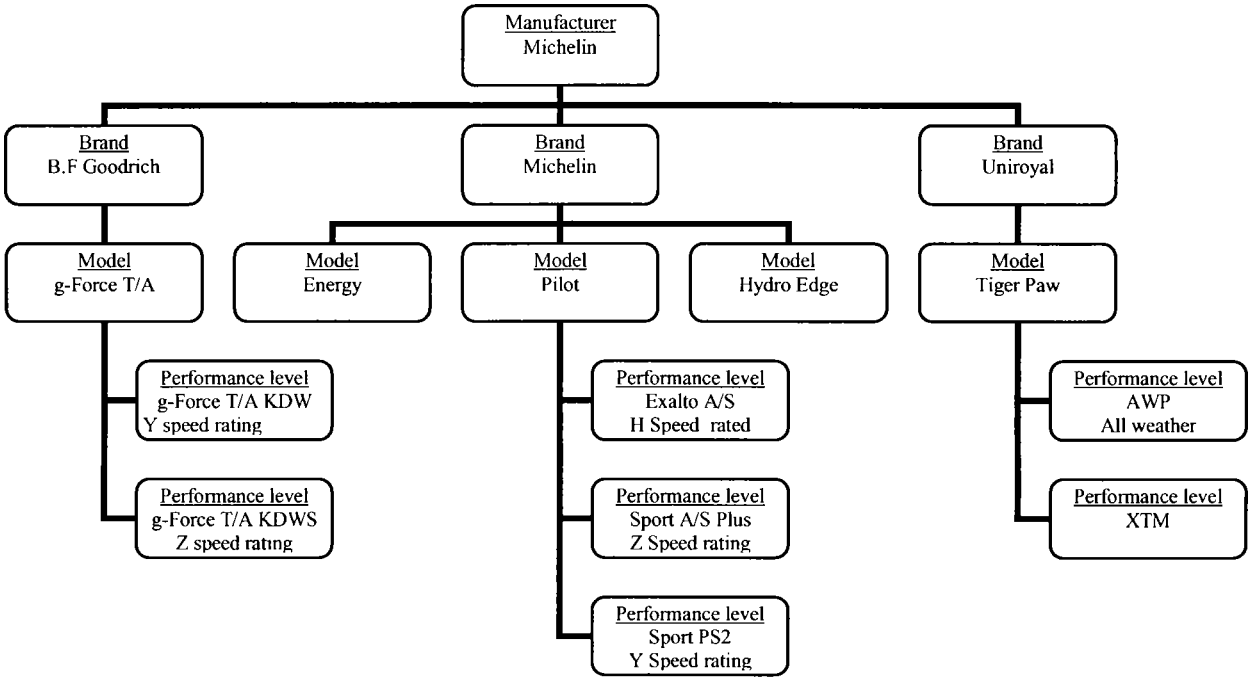

Figure 3. Example of Tire Terminology

In passenger car tire sizes (*e.g.,* 185/65R14), the first three numbers indicate the nominal width of the tire, *i.e.,* width in millimeters from sidewall edge to sidewall edge (185). In general, the larger the nominal width, the wider the tire. The second two numbers in the size designation indicate the ratio of tire height to tire width, or the aspect ratio (65). For aspect ratio, numbers of 70 or lower indicate a short sidewall for improved steering response and better overall handling on dry pavement. The ''R'' indicates that this particular tire is a radial tire, as opposed to bias ply construction, which is indicated by a ''D'' in the size specification. Radial ply construction of tires has been the

[86] Rubber Manufacturers Association, Preliminary 2008 Factbook, *see https://www.rma.org/publications/market_information/index.cfm?CFID=23483353&CFTOKEN=70640000.*

[87] *See* NHTSA Rolling Resistance Rating System Test Development Project: Phase 1—Evaluation of Laboratory Test Protocols (October 2008). A copy of this report and other research reports relied on in this proposal will be placed in the docket.

[88] 49 CFR 575.104(d)(1)(i)(B).

[89] For purposes of the tire fuel efficiency consumer information program, the phrase ''tire line'' and ''tire model'' can be used interchangeably. The agency will generally use the word ''model'' to refer to a particular line of tires.

industry standard for the past 20 years. The last two numbers in the size designation indicate the rim diameter code (14), or the wheel or rim diameter in inches. A change in any of these three numbers indicates a different size specification for a replacement tire.

Research done for the California Energy Commission (CEC) to evaluate test facility capacity to conduct rolling resistance testing indicated that there are well over 20,000 different brand/model/size combinations (or SKUs) [90] of replacement passenger car tires sold in the United States.[91] The CEC research also indicated that it could take up to 2.7 years to test one tire of each SKU once.[92] Additionally, a tire manufacturer has the ability to estimate with relative accuracy the rolling resistance test value of a tire with a given size specification if it knows the rolling resistance test value of a tire in the same model line (*i.e.,* the ability to extrapolate test values for certain SKUs from knowing the actual test values of other SKUs). Tire manufacturers have this same ability to extrapolate for UTQGS traction test values and UTQGS treadwear test values by having actually traction and treadwear test values of other, similar tires of different SKUs. For these reasons, NHTSA tentatively concludes that it is not reasonable or necessary to require a physically-tested value of rolling resistance, traction, or treadwear test value for every combination of tire model, construction, and size (SKU).

However, consumers researching tires should be able to compare tire models and sizes with some reliability. In NHTSA's testing, tires of a size 225/60R16, but manufactured by different companies, and having various performance ratings (*e.g.,* speed rating, all-season specification) had rolling resistance values ranging from 9.8 to 15.2 pounds.[93] Rolling resistance can also vary widely across different sized tires in a brand. In data reported by the CEC, passenger car tires of the same brand and model with different sizes ranged in rolling resistance from 7.5 to 22.8 pounds.[94]

For these reasons, NHTSA is proposing to require each SKU, or each size within each model of each brand, to be *rated* separately for fuel efficiency (using a rolling resistance test value), safety (using a UTQGS traction test value), and durability (using a UTQGS treadwear test value). Tire manufacturers may use their judgment to determine how many and which tires they must test to be able to accurately report rolling resistance ratings. A tire manufacturer will be responsible for the accuracy of the ratings they place upon the tire label and otherwise communicate to consumers. That is, for compliance purposes, NHTSA will test any rated tire according to the test procedures specified in the regulation (regardless of whether or not the tire manufacturer has tested this tire), and if the rolling resistance, traction, or treadwear test value falls outside of NHTSA's specified tolerance range, the agency will consider that rating a noncompliance. *See* discussion of tolerances in section XI of this notice.

For data reporting purposes, a manufacturer must calculate a test procedure value for rolling resistance, traction, and treadwear, although it is not required to conduct the specific test in the regulation. The proposed specified test procedures merely indicate the procedures NHTSA will use to test and rate a replacement tire for compliance purposes. A tire manufacturer is free to reasonably estimate the test values it reports. NHTSA requests comment on the appropriateness of using interpolated values (for instance a rating for a P215/60R16 value calculated from tested values for a P205/60R16 and a 225/60R16) and extrapolated values (for instance the effect of changes in tread pattern for a specific tire construction of known rating) to provide tire ratings.

D. Tires Excluded

NHTSA's UTQGS regulation excludes ''deep tread, winter-type snow tires, space-saver or temporary use spare tires, tires with a nominal rim diameter of 12 inches or less, [and] limited production tires.'' [95] 49 CFR 575.104(c)(1). Since EISA specifies that the tire fuel efficiency requirements are to ''apply only to replacement tires covered under [NHTSA's UTQGS regulation],'' these exclusions are included in today's proposed regulation.[96]

NHTSA's research included testing of two different snow tire models.[97] The two snow tire models tested were within the range of rolling resistance force values of all-season and summer-only passenger tires of the same size. Therefore the specific exclusion of winter-type tires, which represented 4.5 percent of the U.S. replacement tire market in 2007 [98] should not impede the effectiveness of the rating system in reducing U.S. passenger vehicle fuel consumption.

NHTSA requests comments on whether it should include in the manufacturer reporting requirement (*see*

[90] An SKU, or stock keeping unit, is a specific market brand and tire design and size combination. A different SKU can also be indicated by a different specified load rating or speed rating for a particular tire. Specifically, NHTSA is proposing to define stock keeping unit as ''the alpha-numeric designation assigned by a manufacturer to uniquely identify a tire product. This term is sometimes referred to as a product code, a product ID, or a part number.'' *See* section XIII (Regulatory Text) of this notice.

[91] The CEC research estimated 20,708 different replacement passenger car tire SKUs and 3,296 replacement LT tire SKUs. This research was done by Smithers Scientific Services, Inc. (Smithers) and was presented at a CEC staff workshop on February 5, 2009. This presentation is available through the CEC's Web site and also will be available in this docket. *See http://www.energy.ca.gov/transportation/tire_efficiency/documents/index.html* (last accessed Feb. 11, 2009).

[92] The Smithers' research conducted for CEC was estimating various scenarios for testing three of each different replacement passenger *and* LT tire SKU (because California's tire fuel efficiency program covers passenger car and LT replacement tires). The eight different scenarios varied workdays per year, percent capacity available, and hours per day of test operation. Based on estimates of test capacities, the CEC research estimated average test years required to test three tires of each SKU to be between 0.7 and 8.2 years. Thus, for the purposes of testing one of each different replacement passenger car tire SKU, we estimate this would take a maximum of 8.2/3 years, or 2.7 years.

[93] *See* NHTSA Rolling Resistance Rating System Test Development Project: Phase 1—Evaluation of Laboratory Test Protocols (October 2008). A copy of this report and other research reports relied on in this proposal will be placed in the docket.

[94] To examine California's rolling resistance test data, please contact Ray Tuvell of the California Energy Commission. *See http://www.energy.ca.gov/transportation/tire_efficiency/index.html* (last accessed Feb. 13, 2009).

[95] For UTQGS, a limited production tire is defined as ''a tire meeting all of the following criteria, as applicable:

(i) The annual domestic production or importation into the United States by the tire's manufacturer of tires of the same design and size as the tire does not exceed 15,000 tires;

(ii) In the case of a tire marketed under a brand name, the annual domestic purchase or importation into the United States by a brand name owner of tires of the same design and size as the tire does not exceed 15,000 tires;

(iii) The tire's size was not listed as a vehicle manufacturer's recommended tire size designation for a new motor vehicle produced in or imported into the United States in quantities greater than 10,000 during the calendar year preceding the year of the tire's manufacture; and

(iv) The total annual domestic production or importation into the United States by the tire's manufacturer, and in the case of a tire marketed under a brand name, the total annual domestic purchase or purchase for importation into the United States by the tire's brand name owner, of tires meeting the criteria of paragraphs (c)(2)(i), (ii), and (iii) of this section, does not exceed 35,000 tires.'' 49 CFR § 575.104(c)(2).

[96] 49 U.S.C. 32304A(a)(3).

[97] *See* NHTSA Rolling Resistance Rating System Test Development Project: Phase 1—Evaluation of Laboratory Test Protocols (October 2008). A copy of this report and other research reports relied on in this proposal will be placed in the docket.

[98] Rubber Manufacturers Association, Preliminary 2008 Factbook, *see https://www.rma.org/publications/market_information/index.cfm?CFID=23483353&CFTOKEN=70640000.*

section VII.D.1) a requirement that each manufacturer include with its reports a list of all tire models and sizes that it is claiming are excluded from today's proposed requirements (49 CFR 575.106). In particular, the limited production exclusion is not obvious just by examining the tire, and this would allow NHTSA to quickly verify whether or not the lack of a label was an enforcement concern. The agency may include such a reporting requirement in the final regulation.

IV. Rolling Resistance Test Procedure

A. Rolling Resistance

As explained above, rolling resistance is simply the manifestation of all of the energy losses associated with the rolling of a tire under load.[99] Accordingly, in a laboratory, rolling resistance is measured by running a tire under load on a test wheel (referred to as ''roadwheel''). The energy consumed in driving the tire is measured and the energy recovered from the tire is measured by the test equipment. The difference is the heat energy lost which is the measure of rolling resistance. The smaller the difference, the more fuel efficient the tire. NHTSA is only interested in the force required to maintain a steady state of movement, *i.e.,* speed. Therefore the steady state, or constant, speed test methods are the only ones considered by NHTSA.

B. Possible Test Procedures Available To Measure Rolling Resistance

As mentioned previously, subsequent to the recommendations for Congressional action issued in the 2006 NAS Report, NHTSA began a research program to evaluate five existing or proposed test methods to measure the rolling resistance of light vehicle tires, and to examine correlations between tire rolling resistance levels and tire safety performance (Phase 1 Research).[100] The five test methods examined in NHTSA's Phase 1 Research included four established and one draft tire rolling resistance test procedure. The five test methods were as follows:

- Society of Automotive Engineers (SAE) J1269—Sep 2006–09; *Rolling Resistance Measurement Procedure for Passenger Car, Light Truck and Highway Truck and Bus Tires* (Multi Point).
- SAE J1269—Sep 2006–09; *Rolling Resistance Measurement Procedure for Passenger Car, Light Truck and Highway Truck and Bus Tires* (Single Point).
- SAE J2452—Jun 1999; *Stepwise Coastdown Methodology for Measuring Tire Rolling Resistance* (Multi Point).
- ISO 18164:2005(E); *Passenger car, truck, bus and motorcycle tyres—Methods of measuring rolling resistance* (Multi Point).
- ISO 28580; *Tyre Rolling Resistance measurement method—Single point test and measurement result correlation—Designed to facilitate international cooperation and, possibly, regulation building* (Single Point).

The SAE is an international standards organization providing voluntary industry standards.[101] The ISO is a worldwide federation of national standards bodies that prepares standards through technical committees comprised of international organizations, governmental and non-governmental, in liaison with ISO.[102] The standards and test methods published by these bodies are proprietary and protected under U.S. copyright law. Parties who need to or wish to conduct the actual tests themselves may obtain a copy of the standards by contacting either SAE or ISO.

NHTSA's Phase 1 Research used 600 tires of 25 different model/size combinations to evaluate the five rolling resistance test methods at two different laboratories.[103] Tires of each model were purchased with identical or similar build dates and were tested multiple times in each test method, and multiple times at each laboratory.

Figure 4 shows a typical laboratory test machine (used for all five test methods evaluated) for measuring rolling resistance. In this test a tire and rim are mounted on the machine. The tire is held against the roadwheel by an actuating cylinder aligned with the center of the roadwheel. A drive motor coupled to the roadwheel rotates the roadwheel. Consequently, the roadwheel drives the tire through friction at the contact patch. The tire's rolling resistance retards the roadwheel's rotation speed. This effect is then measured using any combination of the forces, torques, speeds, or acceleration of the roadwheel. Then the rolling resistance is calculated from the measured quantities.[104]

A tire's rolling resistance is the energy consumed by a rolling tire, or the mechanical energy converted into heat by a tire, moving a unit distance on the roadway.[105] The magnitude of rolling resistance depends on the tire used, the nature of the surface on which it rolls, and the operating conditions—inflation pressure, load, and speed.[106]

[99] National Highway Traffic Safety Administration, The Pneumatic Tire, DOT HS 810 561, at 483 (February 2006).

[100] *See* NHTSA Rolling Resistance Rating System Test Development Project: Phase 1—Evaluation of Laboratory Test Protocols (October 2008). A copy of this report and other research reports relied on in this proposal will be placed in the docket.

[101] SAE International, 400 Commonwealth Drive, Warrendale, PA 15096–0001, Tel (877) 606–7323, *http://www.sae.org.*

[102] ISO Central Secretariat, 1, ch. de la Voie-Creuse, Case postale 56, CH–1211 Geneva 20, Switzerland, Telephone +41 22 749 01 11, Fax +41 22 733 34 30, *http://www.iso.org.*

[103] This study looked at both Passenger car (P) tires and Light Truck (LT) tires. However, EISA limits the applicability of this rulemaking to P tires only.

[104] National Highway Traffic Safety Administration, The Pneumatic Tire, DOT HS 810 561, at 514–515 (February 2006).

[105] Rolling resistance is, thus, defined as energy per unit distance, which is the same units as force (Joules/meter = Newtons). However, unlike force, rolling resistance is a scalar quantity with no direction associated with it. National Highway Traffic Safety Administration, The Pneumatic Tire, DOT HS 810 561, at 477 (February 2006).

[106] *Id.*

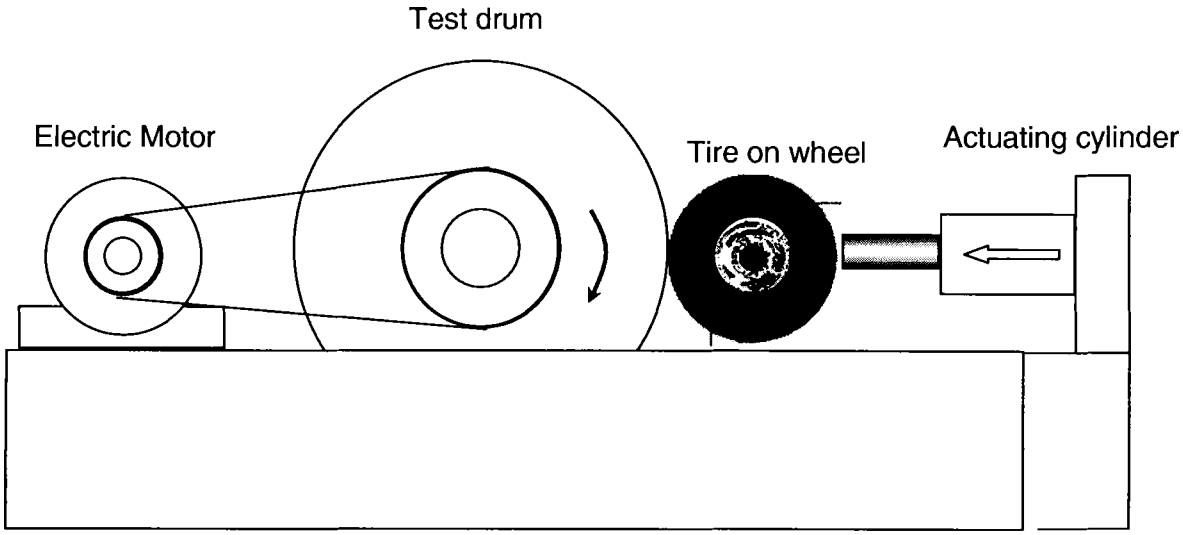

Figure 4. Typical Test Configuration for Rolling Resistance Measurements

Four measurement methods of energy loss are in common use and prescribed in test procedures, although not all of the methods are included in every standard.[107] The methods described in the test standards include the following: measurement of the resistive force at the tire spindle while rolling at constant speed (force method), measurement of the resistive torque on the roadwheel hub at constant speed (torque method), measurement of the electrical power used by the motor to keep the roadwheel rotating at a constant speed (power method), and measurement of deceleration when the driving force at the roadwheel is discontinued (deceleration method).[108] The two methods evaluated in NHTSA research were the force and torque methods. Therefore deceleration and power methods are not discussed further in this notice.

Force Method

The force method measures the force at the tire spindle. *See* Figure 5. The roadwheel is brought up to the specified test speed and the tire is warmed up (warm-up) to an equilibrium temperature. The tire is then lightly loaded [109] to measure the losses caused by the spindle holding the tire and aerodynamic losses from the tire spinning. This force measurement is referred to as the skim load value. The tire is then loaded to the test load and successive readings of the resistive force at the tire spindle while rolling at constant speed are taken until consistent force values are obtained.[110]

[107] The proposed test procedure, ISO 28580, has provisions to use all four methods to measure the energy loss.

[108] National Highway Traffic Safety Administration, The Pneumatic Tire, DOT HS 810 561, at 515 (February 2006).

[109] Lightly loaded is not a specific number of pounds, but just enough load to keep the tire in contact with the roadwheel, so that the speed of the tire is equal to the speed of the roadwheel surface so there is no slippage.

[110] As the machinery ramps up the tire speed to the specified test speed, the force values measured bounce around at first. An accurate measurement can only be taken when the tire is moving at a constant speed and is a constant temperature. Thus, there is a slight delay from ramping up to the specified test speed, and the measurement of an accurate and steady force reading.

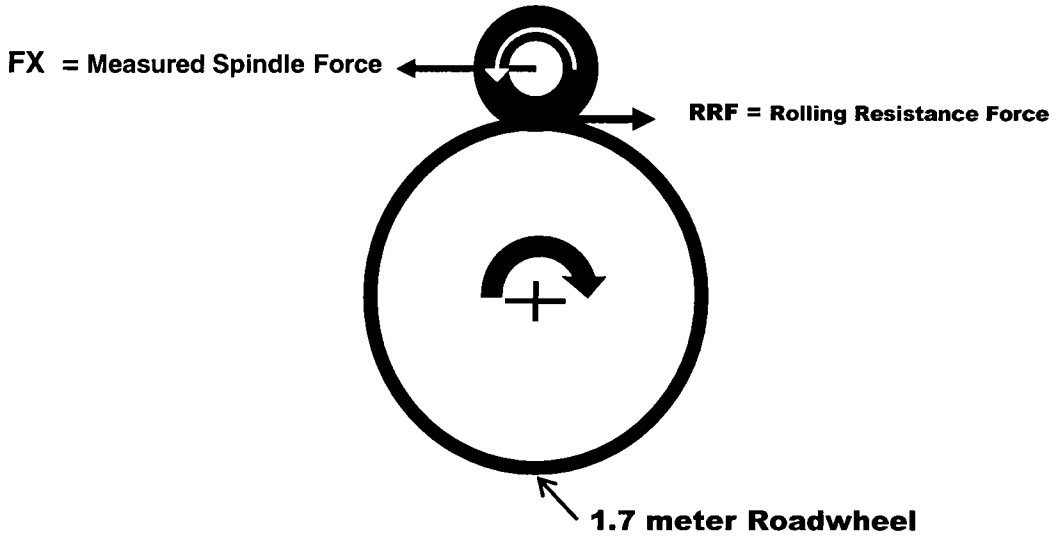

Figure 5. Force Method Rolling Resistance

The reported force value is equal to the measured force at the spindle minus the skim load value, thereby determining the actual Rolling Resistance Force (RRF) value of the tire. This force is trying to slow down the rotation or travel of the roadwheel due to the energy loss.

Torque Method

The torque method measures the energy, or torque, required to maintain the rotation of the roadwheel. The roadwheel is connected to the motor through a ''torque cell.'' *See* Figure 6.[111] The roadwheel is brought up to speed and the tire is warmed up (warm-up) to an equilibrium temperature. The tire is then lightly loaded to measure the losses caused by the spindle holding the tire and aerodynamic losses from the tire spinning (skim load value). The tire is then loaded to the test load and successive readings of the resistive torque on the roadwheel hub at constant speed are taken until consistent force values are obtained.

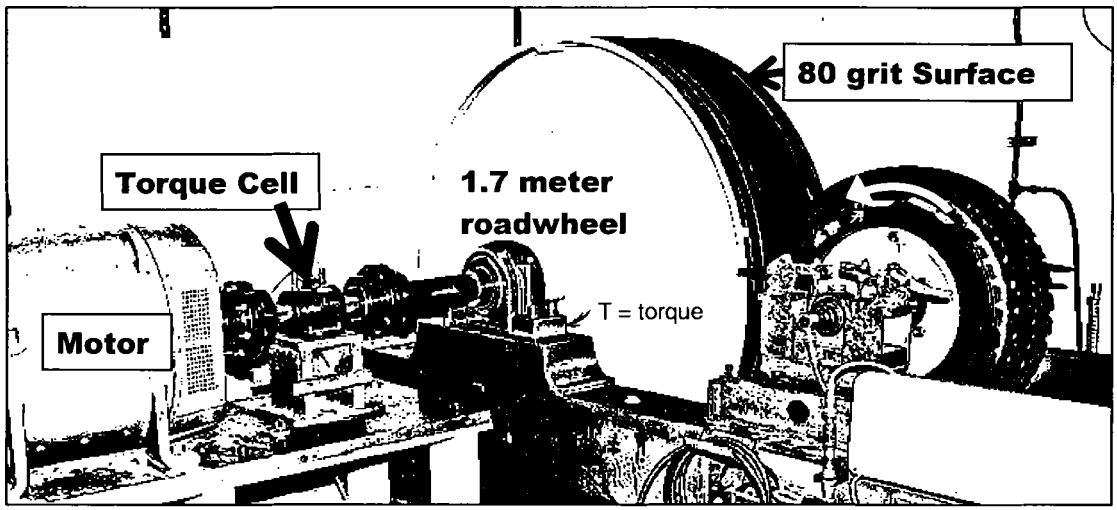

Figure 6. Torque Method Rolling Resistance

The values measured for skim and loaded torque must be processed to determine the force (RRF). The skim must be subtracted from the loaded torque value divided by the radius of the roadwheel to determine the tire's contribution to the total loss. The result is Rolling Resistance Force (RRF).

C. NHTSA Research Results

Some of the technical challenges involved in selection of a test procedure to measure rolling resistance include specifying a test method that avoids variation among laboratories/machines. NHTSA also sought to examine possible tradeoffs between improved rolling resistance and tire safety. The purposes of the NHTSA Phase 1 Research was to:

[111] A color version of Figure 6 will be placed in the docket.

• Benchmark the current rolling resistance levels in modern passenger vehicle tires in terms of actual rolling force, rolling resistance coefficient, as well as indexed against the ASTM F1493–06 Standard Reference Test Tire (SRTT).

• Analyze the effect of the input variables on the testing conditions for non-linear response.

• Select a test procedure that would be best for a regulation.

• Examine the variability of the rolling resistance results from lab to lab, machine to machine.

• Evaluate the effects of first test on a tire versus second test on the same tire.

As discussed above, there can be up to four methods specified for measurement of tire rolling resistance: force method, torque method, power method, and deceleration method. Of these, the force and torque methods are the most commonly used. One test laboratory used in NHTSA's Phase 1 Research evaluated all five rolling resistance procedures on one ''force measurement method'' test machine. The second test laboratory evaluated SAE J2452 on one ''torque measurement method'' test machine and the other four methods on a second ''force measurement method'' test machine. In NHTSA's Phase 1 Research, all work was done using machines with 1.707 meter (67.23 inch) roadwheels with grit surface, which is typical for the United States.[112]

An analysis of variance (ANOVA)[113] was carried out on the data using the General Linear Models procedure of SAS software to evaluate the effects on measured rolling resistance of tire type, lab-to-lab variability, inflation maintenance, and repeat testing on the same tire. For all of the variables analyzed, individual tire type had the most significant effect on the statistical model.

NHTSA's evaluation indicated that all five of the rolling resistance test methods had very low variability and could be cross-correlated to provide the same information about individual tire types.[114] The rank ordering of tire types was essentially the same for each of the test methods evaluated. There was a significant and consistent difference in the data generated by the two laboratories/machines used in this study. Therefore, development of a method to account for lab-to-lab variability is required, either by (1) the use of lab-to-lab correlation equation, based on a reference laboratory, or (2) the use of a Standard Reference Test Tire (SRTT), to normalize data across labs.

NHTSA also examined differences resulting from the method of inflation maintenance, specifically whether inflation pressure was capped[115] or regulated.[116] The pressure rise in the tire during testing using a capped inflation procedure reduced the rolling resistance compared to maintaining the pressure at a constant pressure during the test. Therefore, the choice of a test that uses capped inflation pressure for some or all of the test points should provide a more accurate representation of in-service behavior.

Finally, NHTSA analyzed the effect of repeating tests on the same tire and found that this had little to no effect on test results. Therefore, repeat testing of the same SRTT for lab-to-lab data alignment appears to be viable.

To minimize variability when evaluating the five test methods, tires of each model were purchased with identical or similar build dates. Therefore, the variability of an individual tire model's rolling resistance over a long duration of build dates, or for a single model built at different plants, has not been evaluated by NHTSA.

D. Why Select a Single-Point Test Instead of Multi-Point?

The term ''multi-point'' refers to a method that uses more than one set of conditions to test a tire, usually varying speed, pressure, and/or load. Passenger car and light truck tires generally have different test conditions and can have even a different number of test points in the set of conditions. The goal of multi-point testing is to allow the use of statistical techniques to reduce rolling resistance force measurement variability and to allow prediction of the effect of changes in inflation pressure, tire load and speed on rolling resistance force. The term ''single-point'' refers to a method that uses a single set of test conditions. These conditions are designed to be near the average conditions that a tire would see in its intended service.

NHTSA's evaluation showed that all of the rolling resistance test methods have very low variability and all methods can be cross-correlated to provide the same information about individual tire types. The rank ordering of tire types was essentially the same for each of the rolling resistance test methods evaluated. Equations were derived to accurately convert data from any one test to the expected data from any other test. NHTSA's research has shown that both types of tests essentially produce the same rating if results are normalized as a percentage of RRF measured at each lab for the 16-inch SRTT.[117] Single-point tests are less expensive and shorter than multi-point test methods. Additionally, with single-point tests, data from any method can be correlated to data from any other method. Accordingly, NHTSA tentatively concludes that a single-point, rather than a multi-point, test will better serve the purposes of this program. The agency seeks comments, however on the benefits or drawbacks of using single-point versus multi-point test methods.

E. Why Select ISO 28580 Instead of Other Tests?

Between the two single-point tests, NHTSA is proposing to specify the ISO 28580 test procedure. The ISO 28580 is a draft test method that is now at the final draft international standard (FDIS) stage, and is expected to be balloted and finalized by late April or early May 2009. Since the ISO test is currently being balloted for a final standard, we anticipate only editorial changes at this stage. The differences between the single-point ISO 28580 draft test procedure and the SAE 1269 single-point test procedure are detailed in documents available in the docket.[118] If

[112] Internationally some laboratories use a 2 meter (78.34 inch) roadwheel, often with a bare steel surface.

[113] The term analysis of variance refers to the method of determining if an independent variable, such as tire type, has a significant effect on the dependent variable (rolling resistance) by comparing the magnitude of the variation between the means for different groups of independent variables to the variation estimated for random error.

[114] For this program, each manufacturer will ''self-certify'' the ratings for its tires. The test procedure specified in this proposal is what NHTSA will use for compliance testing, using the proposed tolerance bands as discussed later in this notice (section XI). Even if rolling resistance test data were gathered using other test methods, NHTSA's research shows that equations can translate the data to the test procedure specified in this rule.

[115] Capped inflation is achieved by inflating the tire to the required pressure prior to testing, while the tire is at ambient temperature of the test area, and then sealing the air in the tire during testing with a valve, cap or some other seal.

[116] Regulated inflation pressure is achieved by inflating the tire to the required pressure independent of its temperature, and maintaining this inflation pressure during testing. This is usually performed by using a regulated air (gas) supply external to the spindle, or axle, and connected with a low friction rotary union.

[117] *See* NHTSA Rolling Resistance Rating System Test Development Project: Phase 1—Evaluation of Laboratory Test Protocols (October 2008). A copy of this report and other research reports relied on in this proposal will be placed in the docket.

[118] *See* National Highway Traffic Safety Administration, Tire Rolling Resistance for Light Vehicles, I: Selection of Tires and Tests for Rating

the ISO 28580 test procedure is not a finalized ISO standard by the time of publication of this notice, interested parties may obtain a copy of the draft by contacting Mr. Joe Pacuit, U.S. TAG Secretariat to TC 31, *Tyres, rims and valves.* Mr. Pacuit can be reached by telephone at (303) 666–8121.

One significant difference between the ISO and SAE single-point tests is that ISO 28580 includes a procedure which uses two reference tires to correlate any laboratory/machine to a master laboratory. NHTSA's research showed significant difference between the two laboratories used, and therefore addressing this variation is a significant advantage for the draft ISO standard. Use of the SAE J1269 single-point test would require NHTSA to develop its own procedure to address lab-to-lab variation, and there is insufficient time to complete that work before December 2009, the Congressionally-mandated deadline for this program.

While there are larger numbers of tires tested using the SAE J1269 procedure in the databases NHTSA had access to, NHTSA does not see this as an impediment to adopting the ISO test. NHTSA's research shows that the results from either method can be cross-correlated to provide the same information. Specification of the ISO 28580 single-point test may also allow manufacturers to do one test to comply with both European and U.S. regulations.

Additionally, the ISO 28580 single-point test uses capped inflation pressure, which NHTSA believes will provide a more accurate representation of in-service behavior. NHTSA seeks comment on the specification of the ISO 28580 single-point test, as opposed to the SAE single-point test and all other rolling resistance test methods.

Two optional parameters must be specified for the ISO 28580 single-point test: the method(s) of measurement, and the type of surface on the roadwheel (*i.e.,* textured or bare steel). NHTSA is proposing to allow only the force or torque method during the test procedure, as they are the only two types of machines available to NHTSA in the U.S.

The agency is proposing to specify the use of an 80-grit surface on the roadwheel, instead of a bare steel roadwheel, to avoid potential problems with slippage. The grit surface is the most common surface used in the laboratories available to NHTSA. NHTSA in its research found that the use of the 80-grit surface produced a slightly higher test measurement than using the bare steel surface. The lab correlation (alignment) procedure may account for this difference and correlate results from the two different test conditions. However, there was some evidence of potential problems for smooth steel-surfaced roadwheels in NHTSA Phase 1 testing.[119] In that testing, the rolling resistance of deep-lug tires exhibited a relatively linear behavior on grit surfaces over a range of test loads but dropped off consistently at high loads on smooth steel roadwheels. This was attributed to slippage of the deep lug tires on the smooth surface. Since the discrepancy in results between a smooth and steel roadwheel could lead to rating compliance disputes, we are proposing the grit surface since it is more repeatable.

NHTSA seeks comment as to whether the lab correlation (alignment) procedure will, in fact, account for differences between measurements made using an 80-grit surface on the roadwheel and a properly micro-textured steel-surfaced roadwheel.

V. Proposed Rolling Resistance Rating Metric

The output of the rolling resistance test machines is used to calculate the rolling resistance force (RRF) in pounds of force (lbf) or Newtons (N) at the interface of the tire and drum, or the force at the axle in the direction of travel required to make a loaded tire roll. Rolling resistance is often expressed and reported in terms of Rolling Resistance Coefficient (RRC) (N/kN, kg/tonne, lbf/kip), which is the rolling resistance force divided by the test load on the tire.[120] Since rolling resistance changes with the load on the tire, this makes direct comparisons between the tires tested at different loads difficult. The pending European rating system uses RRC as the metric for a rolling resistance rating/score. However, NHTSA is proposing to base the U.S. tire fuel efficiency rating on the RRF metric. NHTSA has tentatively concluded that a rating based on RRF is more descriptive and would provide more information to consumers, than a rating based on RRC. We request comment on the differences between basing a rolling resistance rating system on RRF versus on RRC, and which is more appropriate for the purposes of our statutory mandate under EISA.

One application of rolling resistance information is a vehicle manufacturer selecting which tires to use for original equipment (OE) fitment. This has been the primary application to date, in large part because information on rolling resistance has been less available to consumers. RRC is appropriate to this application, as a specific vehicle model will be operated with a nominal vertical load on a tire, but a range of tire sizes with varying load capacities are available for OE fitment. Another application, and the one under consideration in this proposed rule, is a consumer looking to replace the tires on their vehicle.[121] NHTSA is concerned about the use of RRC for consumers who are looking to replace tires on their vehicle.

A rating system based on either RRC or RRF would allow a consumer to rank order tires for their vehicles based on their fuel efficiency, and the relative ranking stays the same under either RRF or RRC. Since RRF is a measure of the energy consumed by the tire near the normal operating conditions of the tire in its intended use, numerical differences in RRF correlate well to amount of fuel used. By contrast, because conversion to RRC compresses the range of data, numerical differences in RRC do not correlate as well to the amount of fuel used. Since reducing fuel use is the purpose of this program, we are proposing to use the metric that best correlates to fuel use.

Specifically, when NHTSA compared some possible tire choices for three different vehicles (a Chevrolet Impala, a Chevrolet Silverado, and a Toyota Corolla), we found that a 10 point improvement in a 0 to 100 rating system based on RRF corresponds to a similar amount of fuel saved, no matter what tire size is being selected. By contrast, a 10 point improvement in a 0 to 100 rating system based on RRC results in a small amount of fuel savings for a small car and a larger amount of fuel savings for a large car. Thus, a consumer would not be able to place the same value on a specific level of improvement when purchasing tires for different vehicles in a rating system based on RRC. The details of the agency's examination of low, high, and midrange rolling resistance tires for these three vehicles

System Development, presented to California Energy Commission (Feb. 5, 2009) (also available at *http://www.energy.ca.gov/transportation/tire_efficiency/documents/2009-02-05_workshop/presentations/index.php*).

[119] We note that these wheels did not have the micro-texture required by ISO 28580 for steel-surfaced roadwheels.

[120] Most test procedures specify test load as a percentage of the maximum load rating of the tire being tested. For example, the ISO 28580 test procedure specifies a load of 80% of the maximum sidewall load.

[121] What we will be talking about is the majority of purchases, which are for the same size tire that is currently on the vehicle. This discussion does not address the situation where a consumer has decided to change the size of their tires and/or change from P metric tires to LT tires for other purposes.

is provided in Appendix A of this notice.

The goals of the tire fuel efficiency rating system may fail to be met if the overall system is not intuitive to consumers. Consumers would presumably use the system to purchase tires for their current and subsequent vehicles, and consumers may have multiple vehicles in their family for which they purchase tires. Consumers may be confused by a tire fuel efficiency rating system where differences between ratings for different tire sizes represent different quantities of fuel saved, as they would in a rating system based on RRC. NHTSA is concerned that, under a rating system based on RRC, a consumer who purchases tires for different vehicles would notice these differences in fuel savings for the same difference in ratings, and as a result, question the validity of the ratings.

In contrast a rating system based on RRF preserves the concept that differences in ratings correspond to the same amount of fuel savings across tire sizes. Thus, consumers would find a rating system based on RRF more intuitive since a given change in rating will consistently relate more closely to an amount of fuel saved. For a rating system based on RRF, the agency would be able to state a general rule of thumb that, *e.g.,* for every 10,000 miles you drive a difference of 20 on the rating scale equates to X gallons of fuel saved, which could easily be converted into dollars saved by a better rated tire. NHTSA believes that such direct expressions of money saved are likely to be more effective in informing consumer purchasing decisions. A rating system based on RRC would not be able to have such an understandable and useful rule of thumb because it would differ depending on the test load of the tire. For the foregoing reasons, the agency is proposing that the tire fuel efficiency rating be based on RRF.

VI. Proposed Rating System

A. What Should We Convey to Consumers in a Rating System?

1. Fuel Efficiency

As explained above in section II.A.1, NHTSA is proposing to communicate tire fuel efficiency information in the form of a rolling resistance rating, because rolling resistance corresponds to the amount of fuel used in the form of mechanical energy dissipated to move the tire. Tire rolling resistance is the most effective metric for rating the ''fuel efficiency'' of a tire because rolling resistance force (RRF) measures the energy loss that opposes the direction of travel of the rotating tire and, thus, it directly reduces the efficiency of a vehicle in converting the chemical energy in the fuel to motion of the vehicle.

Based on the rolling resistance force test value measured using the ISO 28580 test procedure, the fuel efficiency rating of a given replacement passenger car tire is calculated using the formula specified by NHTSA, which is discussed in section VI.B.1 below.

2. Safety

i. Potential Safety Consequences

There is a growing appreciation but still a limited understanding of how tire traction, wear resistance, and rolling resistance relate to the practical outcomes of vehicle fuel consumption, crash incidence, and tire service life. One of the past concerns about rolling resistance is that traction and/or treadwear are negatively impacted by changes made to improve rolling resistance.

As part of the research in support of this rulemaking, NHTSA performed and analyzed additional testing with the tires that were used to evaluate the rolling resistance test methods. This testing included UTQGS traction and treadwear testing, additional wet and dry traction testing on an outdoor track, indoor dry traction and treadwear testing, and EPA dynamometer fuel economy testing.[122] This research, with one exception discussed below, did not show that this tradeoff is a given and must occur. However, it may cost more to maintain traction or treadwear with an improvement in rolling resistance.

By putting information on all three parameters on a label, a consumer would factor any possible tradeoffs between rolling resistance, traction, and treadwear, and/or cost differences between tires. That is, with all three ratings on one label, a consumer could see whether they were opting for a decrease in traction and treadwear to gain improved rolling resistance.

Technical literature extensively indicates that the tradeoff between fuel economy and safety performance can be significantly reduced or eliminated with advanced compounding technologies, which are usually more expensive and proprietary. However, many aspects of the tire's construction and manufacture affect how much tradeoff remains, and the results of implementing silica tread technology will vary between manufacturers (which ranges from manufacturers who have decades of experience with the technology to manufacturers who have none). It is hoped that increased consumer awareness may help to spur technological innovation to promote simultaneous improvements along several dimensions. At least for the near future, however, the agency cannot guarantee that there will not be a tradeoff between fuel efficiency and safety.

Therefore, NHTSA is concerned about the potential negative safety consequences that may occur if consumers, motivated by potential fuel savings, begin to purchase tires with better rolling resistance ratings but are unwilling to spend additional money to also maintain wet traction levels. Despite having the wet traction rating on the same sticker, some manufacturers may defer the use of the more expensive silica tread technologies and instead optimize tires to lower rolling resistance and treadwear (another important purchase motivator) at the expense of wet traction in order to gain a price advantage. This may be especially prevalent in the lower-cost segments of the market.

A survey of the current marketplace was undertaken to estimate what information consumers currently have for choices in wet traction, price, and, where available, rolling resistance performance of tires. From the NHTSA ratings in *http://safercar.gov* and tires available at TireRack.com, approximately 20 percent of tires currently have traction ratings of AA, 70 percent have ratings of A, and 10 percent have ratings of B. There were no C-rated tires for on-road passenger vehicle use. From the NHTSA data and the data from the California Energy Commission and Consumer Reports magazine, it appears that tire makers design most tires with AA wet traction rating for flag-brand and high-performance tires with correspondingly high average selling prices. Data for rolling resistance, wet traction, and list price performance indicate that tires with both A-traction rating and low rolling resistance performance are available at all list price levels.

ii. Test Procedure

Whereas rolling resistance is a standard measurement for characterizing and comparing tire energy performance, less comprehensive data exist in the public domain for accurate characterizations of tire traction. There are different methods of evaluating traction. For example, the UTQGS rating and the European wet

[122] *See* NHTSA Tire Rolling Resistance Rating System Test Development Project: Phase 2—Effects of Tire Rolling Resistance Levels on Traction, Treadwear, and Vehicle Fuel Economy (February 2009). The research reports from this Phase 2 research will be placed in the docket.

grip rating use different test procedures which do not evaluate the same elements.

The test procedure specified in the UTQGS rating systems for traction is the only metric for which consistent data are widely available for a range of tires. Accordingly, NHTSA is currently proposing to use the traction test procedure specified in the agency's UTQGS regulation to rate tires for safety on the same scale and label as fuel efficiency via rolling resistance rating. *See* 49 CFR 575.104(f). The UTQGS traction test procedure measures a tire's coefficient of friction when it is tested on wet asphalt and concrete surfaces. The subject tire is placed on an instrumented axle of a skid trailer, which is pulled behind a truck at 40 miles per hour (mph) on wet asphalt and concrete surfaces. The trailer's brakes are momentarily locked, and sensors on the axle measure the longitudinal braking forces as it slides in a straight line. The coefficient of friction is then determined as the ratio of this sliding force to the tire load.

The UTQGS traction rating procedure specifies that the traction coefficients for asphalt and for concrete are to be calculated using the locked-wheel traction coefficient on the tire, or sliding coefficient of friction. Because it uses the sliding coefficient of friction, this test procedure indicates the traction or wet pavement behavior for a vehicle that is not equipped with anti-lock brakes (ABS) or electronic stability control (ESC). A vehicle equipped with ABS or ESC reacts to braking and sliding in a more sophisticated way. ABS prevents wheel lock-up by pumping the vehicle's brakes repeatedly during braking events. ESC may automatically perform activation of the brakes on individual wheels in an attempt to slow down a vehicle and point it in a different direction if the system senses a directional loss of control. NHTSA's tire testing research showed that for a tire with a given rolling resistance, vehicles equipped with ABS or ESC will exhibit safer behavior on wet pavement (*i.e.,* better traction) than the sliding coefficient of friction traction measurement would indicate in the UTQGS traction test procedure.

The peak coefficient of friction is a metric that would better indicate traction performance for vehicles equipped with these advanced braking and handling systems. This is because as soon as ABS causes the vehicle to reapply the brakes (and also during ESC system activation), the tires are constantly operating at or near peak coefficient of friction. Thus, since most new cars offer ABS as either standard or optional equipment, and ESC is being mandated on new light vehicles via a phase-in, NHTSA is proposing to base the traction rating for purposes of the tire fuel efficiency consumer information program on the peak coefficients of friction as measured on the asphalt and concrete surfaces specified in the UTQGS traction test procedure.[123] The machinery that conducts this test already measures peak coefficient of friction, so there is no new measurement that needs to be taken.

However, recognizing that the median age for the U.S. passenger car fleet is 9.4 years,[124] NHTSA requests comments on whether it is premature to suggest moving to an ABS–ESC focused rating based on new vehicles. Within the agency's Phase 2 data, tires of the same size had as much as 30 percent difference in wet slide numbers over the range of rolling resistance values. From the 40 mph wet slide friction numbers, a 30 percent difference in wet slide number translates into an increase of 27 feet (13 percent) in calculated wet stopping distance for a non-ABS equipped vehicle. Therefore, it may be necessary to address both peak and slide friction numbers, at least for the near term. The agency has considered a safety rating taken from the average of the four friction numbers (peak & slide on asphalt & concrete), all of which can be collected during the same test. The agency requests comments on whether it should instead consider a composite test, and if the four friction numbers should be weighted equally or differently.

The tire label mandated by Europe in ECE Regulation 117 includes the wet grip test. However, NHTSA would need to do its own evaluation of that test before specifying it in our regulation. NHTSA seeks comments on other ways to rate replacement tires for safety.

3. Durability

The rolling resistance, traction, and wear characteristics of tires are not independent of one another. The tread has a major influence on rolling resistance because it contains much of the rubber in the tire that causes energy loss. The same tread deformation contributes to the tire's traction capabilities. A loss in traction capability because of treadwear is the main reason for tire replacement.[125]

NHTSA tentatively concludes that the durability of a tire refers to how long a tire is going to last, that is, how long it is going to maintain sufficient tread depth for the safe operation and maintain the strength the tire had when it was initially purchased. A treadwear rating measures a tire's wear rate compared with that of control tires. Treadwear life, therefore, corresponds to treadwear durability of a tire. NHTSA seeks comments, however, on other potential ways to communicate durability.

The UTQGS rating systems for treadwear is the only metric for which consistent data are widely available for a range of passenger car tires. Accordingly, NHTSA is proposing to specify the UTQGS treadwear procedure to rate tires for durability on the same scale and label as fuel efficiency via rolling resistance rating. *See* 49 CFR 575.104(e). Based on the UTQGS rating for treadwear as calculated under 49 CFR 575.104(d)(2)(i), the durability rating of a given replacement passenger car tire on a scale of 0 to 100 is calculated by dividing the UTQGS treadwear rating by ten, as explained in further detail below.

NHTSA acknowledges the limits of the existing UTQGS system.[126] Very few participants in the focus groups were aware of these ratings. In a roundtable discussion sponsored by the California Energy Commission dealers uniformly dismissed the system as not providing valuable or reliable information. In fact, those dealers expressed skepticism about tire fuel efficiency ratings if they were ''just another UTQGS rating.'' However, given the statutory deadline for NHTSA to establish this program, NHTSA believes that modified UTQGS ratings for traction and treadwear are the only viable options at this time to fulfill the statutory requirement that this consumer information program educate consumers about tires' relationships to fuel efficiency, safety, and durability.

NHTSA seeks comment, however, on other test methods that could be easily used to establish metrics for safety or durability ratings. As noted above, as part of the research in support of this rulemaking, NHTSA performed and analyzed additional testing with the tires that were used to evaluate the rolling resistance test methods. NHTSA

[123] The phase-in electronic stability control (ESC) requires 100 percent of the fleet to be equipped with ESC by model year 2011, *i.e.,* by September 2010. 72 FR 17236, 17291. Since an anti-lock braking system (ABS) provides many of the components necessary for ESC, NHTSA believes that most manufacturers will likely equip vehicles with ABS as they equip them with ESC. *See id.* at 17256, n. 49.

[124] *See http://usa.polk.com/News/LatestNews/News_20080215_scrappage.htm* (last accessed Mar. 10, 2009).

[125] 2006 NAS Report, *supra* note 4, at 58.

[126] The UTQGS is discussed in more detail later in this notice.

did some indoor treadwear testing in our research program, but merely to provide some comparative information, not to substitute a different test protocol. NHTSA will, however, consider future revisions if information suggests those revisions would enhance the program.

4. Overall Rating

For the purposes of the final rule, the agency is also considering the concept of a combined rating of some sort, which would convert all three benefit metrics into one overall rating. NHTSA notes that in considering how to revise and improve its New Car Assessment Program (NCAP), it sought public comment on the roughly parallel notion of simplifying inter-vehicle comparisons and purchase decision making by consumers by combining the individual safety ratings for different crash modes into a single overall rating. Ultimately, the agency adopted plans to develop and implement such a summary rating.

The advantage of such a system for tire performance ratings would be that it would simplify the ratings, potentially relieving consumers of the task of weighing the ratings for three different metrics for one tire against the three ratings for another tire. At the same time, if the single combined rating were presented to the exclusion of individual ratings for each metric, it would obscure the relative performance of individual components that might carry different priorities with different consumers.

Ideally, the goal would be to express the combined rating in terms that are readily understandable and of practical value to the average consumer. The following example attempts to do this by combining the three ratings into a single absolute (as opposed to relative) cost per mile figure reflecting the full cost of buying and using a tire. The in-use costs of a tire would be based on each of the ratings and the useful life of the tire, reflecting the real-world significance of each of the ratings.

- The in-use cost of the fuel efficiency rating would reflect money spent on fuel consumed.
- The in-use cost of the durability rating would reflect money spent on purchasing replacement tires more or less frequently.
- The in-use cost of the safety rating would reflect money spent on traction-related crashes.

Implementing such a combined rating would face several hurdles, especially regarding the safety rating. For example, how would the safety of any particular tire be measured and what baseline would it be measured against? Further, in order to attempt to convert the safety (traction) rating into stopping distance, potentially costly and time consuming testing for the wide variety of tires would be necessary. An example of such a combined rating for tires might be one expressed in terms of average overall cost/mile.

The agency seeks comments as to whether such a combined rating could be developed and, if so, should be adopted in the final rule and implemented. The agency seeks comments on the relative advantages and disadvantages of a single combined rating, the three rating system in our proposal, and a third approach combining the first two approaches.

B. How Should We Convey Ratings Information to Consumers?

In support of this rulemaking, NHTSA contracted with a strategic communications firm to conduct consumer focus groups to review possible labels and other informational materials. Two focus groups were conducted in three locations, with a total of 54 participants. During the focus groups the participants discussed vehicle safety and fuel economy in general, their tire purchase process, their interest in information about tire fuel efficiency and how they might use it in the tire purchase decision process, and their reaction to five possible label designs.[127] NHTSA anticipates conducting additional consumer testing. The agency seeks comment on our focus group consumer testing and the scope, content, and methodology of future consumer testing.

The tested label designs consisted of different combinations of elements of existing vehicle and/or energy rating schemes. Specifically the designs were developed as different combinations of a red-to-green shaded color scheme as in the European energy labels, stars, numbers, and/or letter grades. One design had a vertical orientation of the rating scale similar to the European label. One design used a 3-axis radar chart. Based on the feedback in the focus groups, NHTSA is proposing to express ratings for tire fuel efficiency (*i.e.,* rolling resistance), safety (*i.e.,* traction), and durability (*i.e.,* treadwear) on a scale of 0 to 100, with 100 being the best rating, and zero being the worst rating.

NHTSA's proposal differs from the European tire fuel efficiency rating system. The European tire label divides the fuel efficiency rating into seven bins, or seven ranges of rolling resistance scores, each range (or bin) represented by a letter, A through G. This is the same letter rating the system used in Europe for rating the energy efficiency of household appliances,[128] and is already well known by consumers in Europe. In contrast, U.S. consumers do not have a preexisting association between letter grades and energy efficiency ratings. Thus, NHTSA is proposing the ratings scales that tested best in the agency's consumer research.

NHTSA's proposal also differs from manufacturer suggestions that NHTSA develop a rating based on five bins, similar to NHTSA's New Car Assessment Program (NCAP).[129] In the focus groups, most of the label designs showed ratings based in bins. The reason for NHTSA's proposal is that participants overwhelmingly preferred the design that showed a numerical rating on a scale of 0 to 100.

Last, NHTSA's proposal differs from the EPA's Energy Star program. In large part this is because of participants' preference for greater discrimination in the rating. In addition, NHTSA's proposal to require manufacturers to report actual test data will allow for the use of such test data to provide additional useful comparative information as discussed later in this notice when NHTSA discusses its planned consumer education program. *See* section VIII.

In consumer testing, NHTSA used both stars (as in the NCAP program) and letter grades (as in the European proposal) representing fuel efficiency grades given based on which range of rolling resistance values, or bin, the tire fell within. While both of these were understood by the participants, the numerical scale giving an individual score for a tire in each category of rating was preferred. Most consumers indicated that they preferred the greater precision of the 0 to 100 rating scale than a 5-point grading scale.[130] A specific score gives consumers a greater ability to discriminate between tires.

In NHTSA's research, consumer focus groups also expressed a clear preference to have fuel efficiency, traction, and

[127] *See* NHTSA Rolling Resistance Focus Group Report (January 2008). A copy of this report and other research reports relied on in this proposal will be placed in the docket. In reviewing these findings, it is important to remember that qualitative research, by design, is not meant to be projectable within accurate statistical ranges. Focus groups allow for the understanding and investigation of group consensus, not individual reactions. Qualitative research offers insight into the thematic and directional information of the participants.

[128] *See* Council Directive 1992/75/EC, 1992 O.J. (L 297).

[129] *See http://www.safercar.gov/*; 73 FR 40016 (July 11, 2003).

[130] NHTSA Rolling Resistance Focus Group Report, at 7–8 (January 2008).

treadwear ratings appear on identical scales, *i.e.,* they expressed distaste for the sample ratings graphic that displayed fuel efficiency on a 0 to 100 scale, traction using letter grades, and treadwear on a different scale. It is true that consumer preferences are not necessarily conclusive on appropriate design. What matters is what design is most helpful in facilitating choice, and judgments in focus groups may not be conclusive on that question. But with reference to the goal of ensuring both simplicity and transparency, NHTSA is proposing to require all three ratings be expressed on a scale of 0 to 100. As noted, NHTSA invites comments on how to ensure that these ratings are as meaningful as possible to consumers.

One of the labels tested included an overall rating, which was generally well-received. Some participants raised their concern that the overall rating was an average of the three factors (fuel efficiency, traction and tread wear), treating them as if they were equally important when in fact few consumers consider them equally important in their own purchase decision. In the end, most felt the overall rating was still useful, as long as each dimension on the label had a rating, as then consumers could separately weigh the factors that were important to them, if necessary.

As noted above, NHTSA is not proposing any regulatory text for an overall rating in today's notice; however we are considering how we might do this for the final rule. NHTSA shares the focus group participants' concern that an overall rating not just be an average, but instead somehow reflect the relative value on some common scale of the three ratings. As discussed above in section VI.A.4, an example of such a system might be expressed as average overall cost per mile. The advantage of such a system would be that it would simplify the ratings. However, at the same time, it would obscure the relative performance of individual components which might carry different priorities with different consumers.

In addition, the agency is uncertain as to whether such a combined rating would be practicable. Developing a cost-per-mile estimate would require addressing the myriad of complications expressed in the Fuel Economy, Safety, and Durability sections above. For example, how would the safety of any particular tire be measured and against which baseline would it be measured? The agency cannot identify poor tire traction as the cause of a crash, but may be able to estimate potential benefits or disbenefits from modified stopping distances that result with different traction ratings. How would potential safety impacts be valued? Should values include estimates of the value of life and degradation in quality of life, or just the economic impacts that result from death and injury and property damage? Since these estimates would represent average impacts spread across society, would they be meaningful to individual tire purchasers?

As noted above, the agency requests comments as to whether such a combined rating could be developed and, if so, should be adopted in the final rule and implemented. The agency seeks comments on the relative advantages and disadvantages of a single combined rating, the three rating system in our proposal, and a third approach combining the first two approaches. NHTSA requests comments on the concept of an overall rating, including the more detailed discussion of how to value these ratings later in this notice or other ideas of how to combine ratings for an overall rating.

1. Proposed Rating Formulas

i. Fuel Efficiency

As explained above, based on the feedback in the focus groups, NHTSA is proposing to express a tire fuel efficiency rating on a scale of 0 to 100, with 100 being the lowest rolling resistance or best rating, and zero being the highest rolling resistance or worst rating. This integer fuel efficiency rating from 0 to 100 (R_{FE}) can be calculated from an ISO 28580 test value of rolling resistance force (RRF) as follows:

$$R_{FE} = (RRF_{max} - RRF) * 100/(RRF_{max} - RRF_{min})$$

where RRF_{max} is the highest rolling resistance the agency believes should be represented on the fuel efficiency rating scale and where RRF_{min} is the lowest rolling resistance the agency believes should be represented on the fuel efficiency rating scale.

Regarding these minimum and maximum RRF values that define the bounds of the fuel efficiency scale, NHTSA's testing research combined with a RRF dataset that California shared with the agency showed RRF test values of replacement passenger car tires ranging from 7.5 to 22.8 pounds-force (lbf). We are, therefore, proposing a rolling resistance force scale ranging from 5 lbf to 25 lbf, where 25 is the highest rolling resistance and thus, the replacement tire with the worst fuel efficiency,[131] representing a zero on the fuel efficiency rating scale. The agency is proposing this range because the high end of the rolling resistance scale range should be set at close to the level of the current worst performing tires, since we should not expect tires developed subsequent to this program to get worse fuel efficiency. Allowing for the existence of some tires with higher rolling resistance test values than the selection of replacement tires tested by NHTSA and California, we moved up the estimate of highest rolling resistance force to 25 (from 22.8).

Regarding the low rolling resistance end of the rating scale, even though the combined dataset had tires with an RRF as low as 7.5 lbf, NHTSA is proposing to set this 100 end of the scale based on an RRF of 5.0 lbf, because we believe it is possible to construct tires with improved rolling resistance and the rolling resistance scale should allow sufficient room to express that improvement. NHTSA's research has found that while tire construction need not sacrifice traction or treadwear for improved rolling resistance, maintaining the same traction and treadwear while increasing the fuel efficiency of a given tire typically entails higher costs. *See* safety discussion above in section VI.A.2 of this notice. The agency wants to allow for such future technological innovation in the fuel efficiency rating scale.[132]

Based on NHTSA's proposed rolling resistance force scale of all replacement passenger car tires, a tire fuel efficiency rating would be calculated by the following formula:

$$R_{FE} = (25 - RRF) * 100/(25 - 5) = (25 - RRF) * 5$$

Using this fuel efficiency rating formula, the tires tested by NHTSA and California would fall between 11 and 88 on the 0 to 100 fuel efficiency rating scale. NHTSA seeks comments on this and other possible constructions of the fuel efficiency rating.

As mentioned above, one of the reasons the agency is basing the fuel efficiency rating on RRF rather than RRC is because it allows the program to readily provide consumers with a statement such as ''a difference of X on the fuel efficiency rating scale equates to Y gallons of fuel saved.'' We have calculated that for the proposed fuel efficiency rating scale, a general rule of thumb is that for every 10,000 miles you drive, a difference of five on the scale equates to three gallons of fuel saved when you purchase four tires and a difference of ten on the scale equates to six gallons of fuel saved.

[131] Note that higher rolling resistance force measurements indicate a greater amount of energy lost through the tires and converted to heat. This indicates a lower fuel efficiency of a tire.

[132] If future technology made improvements possible that would allow tires to exceed the range of this or the other two scales, NHTSA would consider future rulemaking to adjust the scales.

ii. Safety

As explained above, NHTSA is proposing to specify that the safety (*i.e.,* traction) rating, for purposes of the tire fuel efficiency consumer information program, be calculated using the peak coefficients of friction, which are friction coefficient numbers that are also recorded by the test equipment used in UTQGS traction rating procedure. The agency is proposing to specify the measurement of the peak coefficients of friction on both asphalt and on concrete, as opposed to the sliding coefficients of friction, as specified in the UTQGS traction test procedure. These measurements of peak coefficient of friction on asphalt and peak coefficient of friction on concrete must be ''adjusted,'' or correlated to a standard reference test tire, because asphalt and concrete surfaces can vary from day to day. Thus, there must be some standardized tire to which the test can calibrate. This is true for the sliding coefficients of friction measured as well.

For the safety (*i.e.,* traction) rating, the agency is proposing to require tire manufacturers to report the Adjusted Peak Coefficient of Friction for Asphalt (μ_{APA}) and the Adjusted Peak Coefficient of Friction for Concrete (μ_{APC}) by testing in accordance with 49 CFR 575.104(f) and recording the average peak coefficients of friction and then adjusting the measured average peak coefficients of friction for asphalt and concrete, respectively, using the following formulae:

μ_{APA} = (Measured Candidate Tire Average Peak Coefficient of Friction for Asphalt + 0.75) − (Measured Standard Tire Average Peak Coefficient of Friction for Asphalt)

μ_{APC} = (Measured Candidate Tire Average Peak Coefficient of Friction for Concrete + 0.60) − (Measured Standard Tire Average Peak Coefficient of Friction for Concrete)

The two constants, 0.75 and 0.60, are based on agency test data for the adjustment of the average peak coefficients of friction for asphalt and concrete pavements, respectively. The agency might change these two numbers if the repaving of the skid pad surfaces at the agency's San Angelo Test Facility results in a shift of these numbers on each surface. NHTSA is seeking comments and proposals on this approach, including the use or change of these constants.

In addition to the adjusted peak coefficients of friction, the agency is also proposing to require tire manufacturers to report the traction rating using the following formula:

R_{TC} = Adjusted Peak Traction Rating = $\{(\mu_{APA} + \mu_{APC})\ \{1 - [(\mu_{APA} - \mu_{APC})/(\mu_{APA} + \mu_{APC})]^2\} - 0.6\} * (100/2.0)$

The agency proposes this formula as a convenient way to obtain a single rating for both asphalt and concrete, and normalizing the expected range to a scale of 0 to 100.[133]

The ''$(\mu_{APA} + \mu_{APC})\ \{1 - [(\mu_{APA} - \mu_{APC})/(\mu_{APA} + \mu_{APC})]^2\}$'' portion of the R_{TC} formula has been developed with the intention of encouraging tire manufacturers to design tires with little disparity between μ_{APA} and μ_{APC}. That is, if $\mu_{APA} = \mu_{APC}$, ''$(\mu_{APA} + \mu_{APC})\ \{1 - [(\mu_{APA} - \mu_{APC})/(\mu_{APA} + \mu_{APC})]^2\}$'' would be equal to $(\mu_{APA} + \mu_{APC})$ and thus the highest rating possible is achieved for a given set of coefficients of friction since no deduction to the rating is assessed due to the disparity of the coefficients of friction between asphalt and concrete. This approach is consistent with the current traction rating philosophy of UTQGS which penalizes a tire's rating if either the asphalt or concrete coefficients are in a lower relative category than the other adjusted coefficient.

Based on data available to date at the agency's San Angelo Test Facility, NHTSA estimates the minimum Adjusted Peak Coefficient of Friction for Asphalt is 0.4, the maximum Adjusted Peak Coefficient of Friction for Asphalt is 1.2, the minimum Adjusted Peak Coefficient of Friction for Concrete is 0.3, and the maximum Adjusted Peak Coefficient of Friction for Concrete is 1.1, for an additive range spanning from 0.7 (*i.e.,* 0.4 + 0.3) to 2.3 (*i.e.,* 1.2 + 1.1). For the purpose of allowing future tire traction improvement, the agency is proposing to expand the estimated Adjusted Peak Coefficient of Friction range of 0.7 to 2.3 to a range of 0.6 to 2.6, where 0.6 would represent a zero on the traction rating scale and 2.6 would represent a 100 on the traction rating scale. The agency proposes this range because we believe it is technically possible to construct tires with improved traction and the traction rating scale should allow sufficient room to express that improvement.

The agency then shifts and normalizes ''$(\mu_{APA} + \mu_{APC})\ \{1 - [(\mu_{APA} - \mu_{APC})/(\mu_{APA} + \mu_{APC})]^2\}$'' from the range of 0.6 to 2.6 to a 0 to 100 rating scale and arrives at the aforementioned R_{TC} formula.[134]

Using the R_{TC} traction rating formula, NHTSA's estimated range of additive Adjusted Peak Coefficient from 0.7 to 2.3 would fall between 5 and 85 on the 0 to 100 safety (wet traction) rating scale. NHTSA is seeking comments and proposals on this approach.

As mentioned above, our safety (traction) rating formula and supporting equations were developed based on limited test data and in advance of traction test resurfacing at our San Angelo Test Facility. Consequently, it is difficult to precisely predict the probable range of adjusted peak coefficients across all replacement tires and, therefore, to calculate the resultant expected safety (wet traction) rating range for existing tires. We plan to update the formula and supporting equations in the final rule with additional data and with test data gathered after the track is resurfaced in order to bring the rating scale to a range that can be expected for state of the art tires. We also request comments on how much to amend the rating formula for the final rule to expand the rating scale at the minimum and/or maximum ends of the scale to allow for future potential wet traction improvements.

In terms of what this scale would mean to consumers, a traction rating is difficult to quantify. That is, it is not as straight forward as it is for a fuel efficiency rating to develop a rule of thumb for the safety rating scale such as ''each difference of X on the safety rating scale equates to Y percent fewer crashes and Z dollars less in resultant economic damages.'' NHTSA would have to try and correlate a rating with a set stopping distance, and then that distance with crashes. These calculations are complicated by the fact that they depend on other factors (in addition to the traction rating of the tires) such as the handling characteristics of the vehicle on which they are mounted, the force with which the brakes are applied, and the loading of the vehicle. To put a tire's safety rating information on an economic scale, all of these characteristics would have to be assumed for all tires. But in reality, there is not a single vehicle that all replacement tires can be mounted on. Therefore, we are concerned that the difference between two such tire safety ratings would not reflect the same economic difference in terms of safety, where the tires were mounted on two different types of vehicles. What we can communicate with the proposed rating

[133] This formula is an adaptation of the Fahrenheit to Centigrade (also a 0 to 100 scale) conversion formula.

[134] The agency notes that the formula for R_{TC} reduces to a simpler form than that which is specified above. For the NPRM we have not reduced the formula so that the public can see where maximum and minimum peak coefficients are used in the equation and to make it clear that it includes a ''rating penalty'' for tires with different coefficients for asphalt and concrete. We believe this is important since these values may change based on additional data and on retesting after our test track has been repaved.

is that tires with better traction ratings stop in less distance than tires with worse ratings.

iii. Durability

Existing treadwear grades in UTQGS range up to 800. Therefore, NHTSA is requiring that the UTQGS treadwear grade be divided by 10 and that number placed on the 1 to 100 scale. This treadwear rating scale will allow for the possible technological development of replacement tires with higher treadwear ratings in the future. Accordingly, if TW_{UTQGS} is the UTQGS rating for treadwear as calculated under 49 CFR 575.104(d)(2)(i), then NHTSA is proposing the treadwear rating for purposes of the tire fuel efficiency rating program (R_{TW}) be calculated according to the following formula:

$$R_{TW} = TW_{UTQGS}/10$$

In terms of what this scale would mean to consumers, the treadwear conversion is straightforward, as the treadwear rating is a relative rating compared to a control tire, which would be rated 10 on our scale. A tire rated 20 should last twice as long as a tire rated a 10. Similarly, a tire rated a 75 on the proposed traction scale would last three times longer than a tire rated 25 on the proposed traction rating scale.

2. Proposed Label Style

NHTSA is proposing to require tire manufacturers to affix a paper label with the fuel efficiency, safety, and durability ratings in the form illustrated in Figure 7.[135] This label is based upon the ratings presentation that tested best with consumers in focus groups conducted by the agency. In NHTSA's consumer focus group research the agency considered and presented consumers with five different ratings graphics containing ratings for fuel efficiency, traction, and treadwear. The ratings graphics were presented in various colors, with various picture icons, and experimented with horizontal rating scales as well as vertical rating scales. *See* Figure 8 through Figure 12.[136]

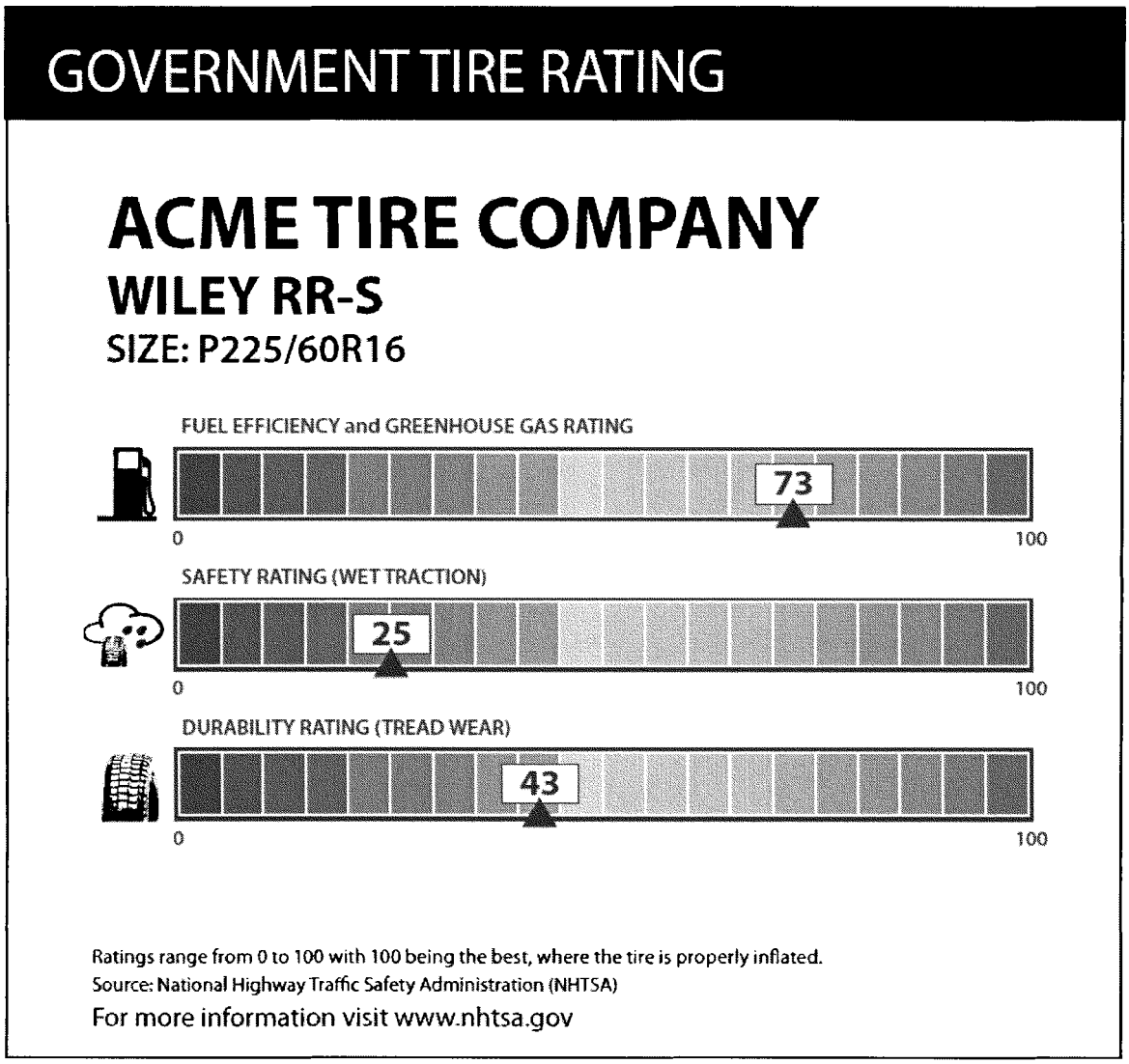

Figure 7. Proposed Label

[135] Manufacturers are required to print UTQGS information on a paper label pursuant to 49 CFR 575.104(d)(1)(B). Many manufacturers include other information on this paper label as well. Note that NHTSA uses the term ''paper label'' in the colloquial sense; many labels on tires are actually made of plastic.

[136] Color versions of Figures 8–12 will be placed in the docket and on NHTSA's Web site, *http://www.nhtsa.gov*.

ACME TIRE COMPANY

WILEY RR-S

SIZE: P225/60R16

Compare This Tire With Others Before You Buy.

Star ratings range from 1 to 5 stars (★★★★★) with 5 being the highest.
Source: National Highway Traffic Safety Administration (NHTSA)

Figure 8. Label A in NHTSA Consumer Research

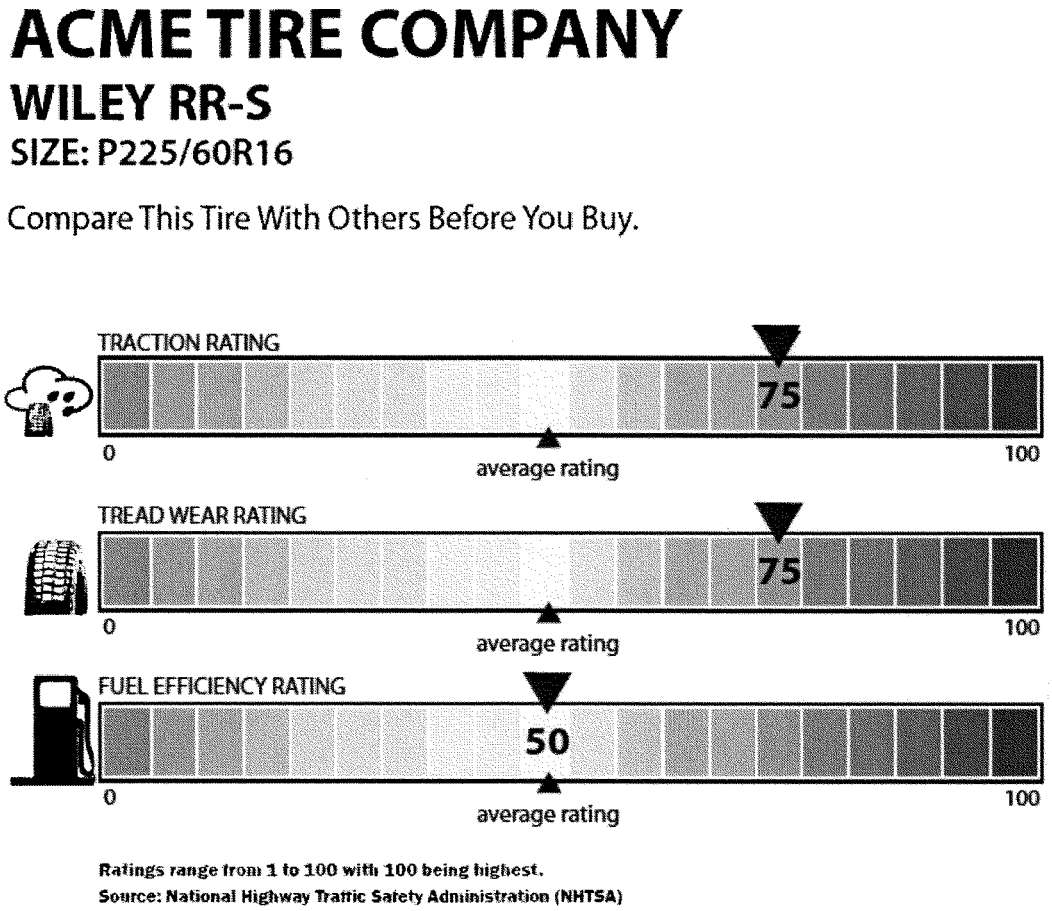

Figure 9. Label B in NHTSA's Consumer Research

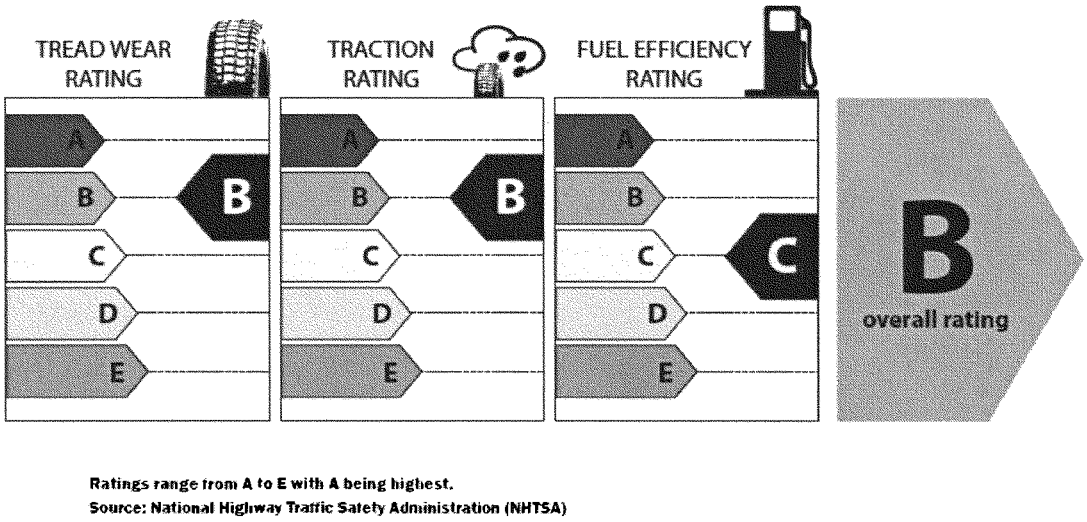

Figure 10. Label C in NHTSA's Consumer Research

ACME TIRE COMPANY

WILEY RR-S

SIZE: P225/60R16

Compare This Tire With Others Before You Buy.

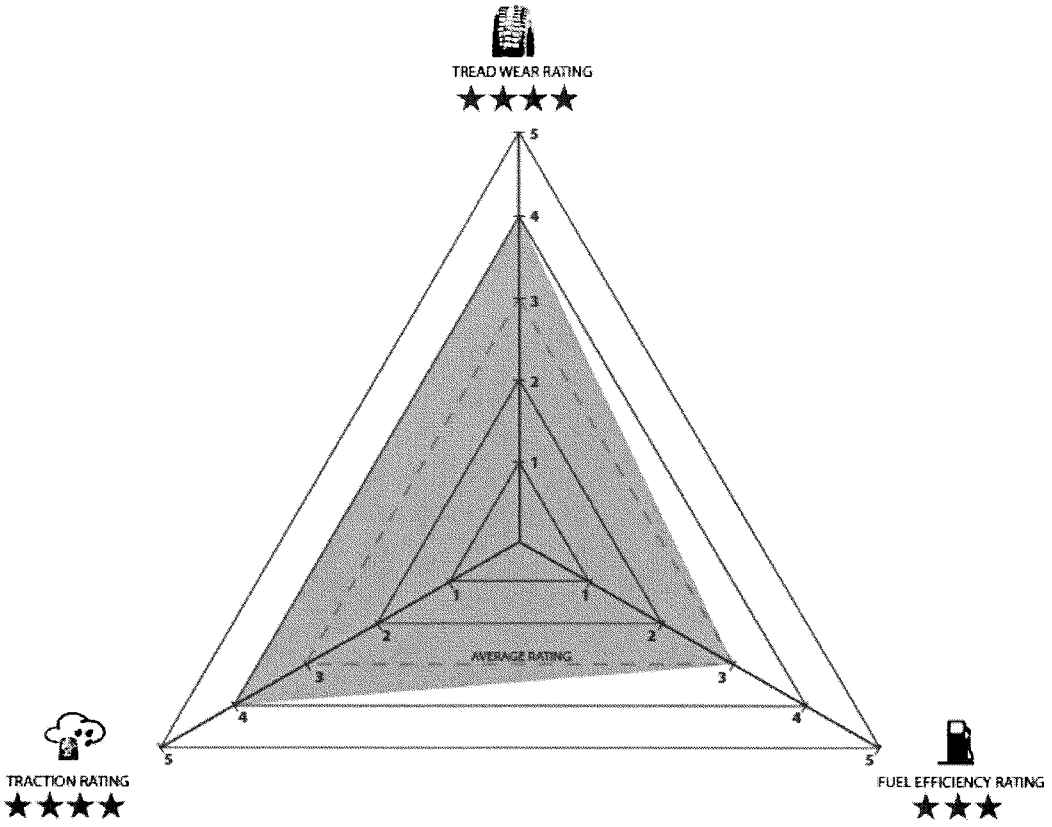

Star ratings range from 1 to 5 stars (★★★★★) with 5 being the highest.

Read the label as 1 being the lowest rating and 5 being the highest rating. The closer the shaded area is to the outside of the triangle, the higher its rating for the data point.

Source: National Highway Traffic Safety Administration (NHTSA)

Figure 11. Label D in NHTSA's Consumer Research

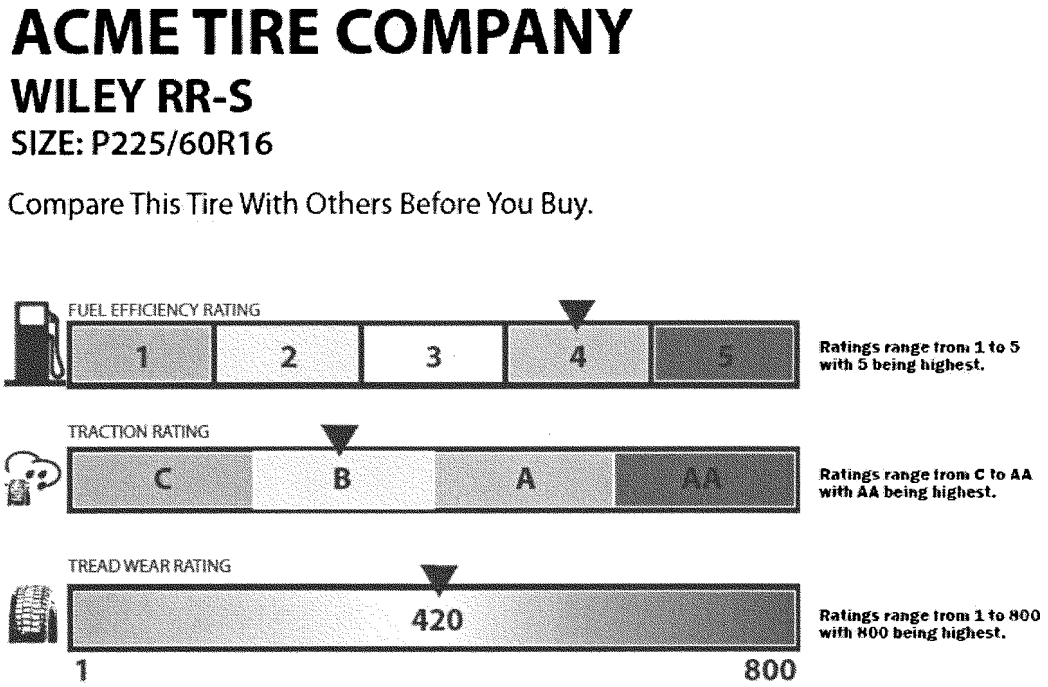

Figure 12. Label E in NHTSA's Consumer Research

NHTSA is proposing that the rating scales be oriented horizontally, that the scales be shaded red (0) to green (100), and that each scale be marked by an icon in addition to the title, similar to Label B shown to the focus groups (Figure 9). This label design was the clearly preferred concept. Participants intuitively understood that red was poor and green was good and liked this color scheme. The vertically-oriented label (Label C, illustrated in Figure 10) was difficult to understand for many participants in the focus groups.

NHTSA is proposing to modify the Label B as shown to consumers (Figure 9) as described here. *See* Figure 7. First, NHTSA is proposing to add a heading that reads, ''Government Tire Ratings,'' similar to the heading on the vehicle label that shows the new car assessment program (NCAP) ratings. The focus group participants indicated that they would prefer to know that it was a government program.

We are also proposing to have the fuel efficiency rating appear topmost on the label, followed by safety and durability. The ratings appeared in different order in the designs shown and participants did not express a preference. NHTSA has chosen to place fuel efficiency on top as that is the emphasis of EISA, however we request comment on the order of ratings. Participants did indicate that safety would be a more important consideration in their purchase decision, so the agency seeks comment on this rating appearing at the top.

Further, we are proposing to change the labels on the rating scales to read as follows: ''Fuel Efficiency and Greenhouse Gas Rating,'' ''Safety (Wet Traction),'' and ''Durability (Treadwear).'' This language more closely mirrors the language in EISA. The agency is proposing that ''Greenhouse Gas Rating'' appear on the fuel efficiency rating scale because section 105 of EISA mandates a consumer information program that will establish a rating system reflecting the fuel economy and greenhouse gas emissions over the life of automobiles.[137] For consistency across fuel economy-related consumer information programs, we are proposing that the fuel efficiency rating in the tire fuel efficiency consumer information program indicate that fuel efficiency ratings also signify relative performance in terms of greenhouse gas emissions.

As for the safety and durability rating scale labels, NHTSA is aware that safety and durability can refer to more characteristics than those rated in the program we are proposing today, and therefore has included ''wet traction'' and ''treadwear'' to clarify what is being rated on the safety and durability scales.

The agency is also proposing to change the language at the bottom of the label by replacing the word ''highest'' with the word ''best.'' This is to because the data behind the rating is not uniformly ''higher'' when the rating improves. While this would not be apparent to all consumers, some may wish to research the data behind the rating and this language would more accurately reflect the data.

NHTSA is proposing to include an additional sentence at the bottom of the label indicating where consumers should go to learn more about the information: ''For more information visit *http://www.nhtsa.gov.''* This sentence appears more prominent than the other reference sentences at the bottom of the label because the agency seeks to encourage consumers to learn about the ratings, which they can do most completely on NHTSA's Web site. The Web address could be replaced if the new tire information Web site NHTSA intends to develop has a simple domain name.

NHTSA is proposing to place the rating on each scale in a white box, as opposed to within one of the colored shaded boxes comprising the scale. This allows the rating score to be printed in slightly larger text than if it were limited to inside each box. Placing each rating in a white box also allows the rating to appear in a more accurate location on the scale, as opposed to being limited to appearing within a shaded box. NHTSA is further proposing to move the arrows pointing to the score to the bottom of each rating scale, as opposed to the top. This is to avoid potentially obscuring the rating scale titles with the arrow on

[137] *See* 49 U.S.C. 32908(g).

the top of the scale pointing to a lower rated tire.

NHTSA is also proposing a minimum font size of 14 point for the heading on the label, and 12 point for the labels on each of the rating scales. NHTSA is also proposing to require the label to be at least 4.5 inches high by 5.5 inches wide. The agency tentatively concludes that this is approximately the smallest size the label could be and still be legible. This is slightly larger than the Stars on Cars label required on vehicles. NHTSA requests comments on these size requirements for the label.

Finally, NHTSA is proposing to delete the indication of ''average rating.'' Without having a complete database of all tires, NHTSA is not sure where the ''average rating'' would be located on each scale. In addition, it is likely that these would not be in the same location on each of the three scales, and focus group participants expressed some confusion with designs like this.

Participants in the focus groups generally liked the icons used on the sample labels, however the icon used for the traction rating was found confusing by many. The cloud in the symbol for traction (representing the source of the rain drops) was confusing for some consumers who could not make out what it was or thought it was a cowboy hat. NHTSA considered other ideas, such as those shown in Figure 13. NHTSA is not currently proposing a different icon than that which was tested. However, NHTSA plans to conduct further consumer testing prior to the final rule and is seeking comment on these and any other ideas regarding possible changes to the traction icon, which indicates ''wet'' traction.

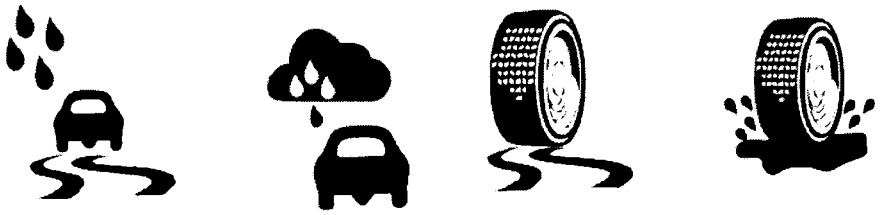

Figure 13. Alternate Traction Icons

NHTSA is further seeking comment on using some icon or mark on the labels to help consumers at a glance identify the most fuel efficient tire. NHTSA has designed the scales so that the highest rating for tires in the databases we have examined for each category would be in the 80s. A mark indicating, for example, the top 25% of ratings could let consumers know that they are already looking at a best-rated tire. The mark could be associated with just the fuel efficiency rating or the tire might only receive the mark if it also has a minimum certain safety and durability rating. This is similar to the idea behind the Energy Star program. The Energy Star program is a voluntary joint EPA and DOE program to rate the energy-efficiency of household products.[138] For each product included in the program, there are performance standards to determine whether or not the product qualifies for an Energy Star designation. As an initial matter, NHTSA is concerned that such a mark might be inaccurately perceived by the consumer as indicating an overall tire rating, which might indicate government approval of the safety of that replacement tire. We request comment on this idea.

NHTSA is also requesting comment on whether or not the ratings label should include a caution that the ratings apply only to properly inflated and/or new tires. Both of these messages would be part of the consumer education program to promote this program.

Last, NHTSA is requesting comment on including a statement like ''made in week xx of year yy,'' where the ''xx'' and ''yy'' would be the numerals from the tire identification number (TIN). NHTSA receives a lot of complaints about the TIN and consumer difficulty in understanding how to read it. Focus group participants also indicated that date of manufacture was additional information they would like to have. NHTSA requests comments on the effect of requiring this information on the paper label.

VII. Proposed Information Dissemination and Reporting Requirements for Tire Manufacturers and Tire Retailers

A. The Replacement Passenger Car Tire Market

Most replacement tires are designed to perform on the wide range of vehicles in the fleet, including vehicle models dating back many years. Thus, suppliers competing in the replacement market must offer a wide variety of tire types and sizes.[139] In addition, the spectrum of replacement tire sizes and types is continually expanding. At any one time, replacement tires from hundreds of brands and lines are for sale in the marketplace, which consists of tens of thousands of individual products, or stock-keeping units (SKUs), when size variability is taken into account. Consumers may choose among a handful to several dozen tire lines for their replacement needs.[140]

Consumers may choose from national Internet and mail order companies to tire dealers, manufacturer outlets, and retail department stores. Typically, the tires bought in the replacement market are balanced and mounted by the tire dealer or retailer.[141] NHTSA is proposing a definition of ''tire retailer'' to be ''a person or business with whom a replacement passenger car tire manufacturer or brand name owner has a contractual, proprietary, or other legal relationship, or a person or business who has such a relationship with a distributor of the replacement passenger car tire manufacturer or brand name owner concerning the tire in question.'' *See* section XIII (Regulatory Text) of this notice. NHTSA seeks comment on the appropriateness and inclusiveness of this definition.

B. Assumptions About the Average Tire Purchaser and the Average Tire Purchasing Process

NHTSA's consumer research focus groups revealed some common themes in consumers' tire purchasing processes, which are discussed in detail below. Additionally, on November 17, 2008 NHTSA participated in a roundtable discussion convened by the Energy Efficiency Center at the University of California, Davis (''UC Davis

[138] *See http://www.energystar.gov/.*

[139] 2006 NAS Report, *supra* note 4, at 21.

[140] *Id.*

[141] *Id.*

workshop'') [142] to discuss the tire purchase process. Participants included State and Federal government agencies, tire manufacturers, tire retailers and universities. Both these sources of information have enabled the agency to make some assumptions regarding the average tire purchaser and the average tire purchasing process. These assumptions have led the agency to draw tentative conclusions regarding the most effective ways to ensure consumers have access to easy-to-understand information. These assumptions form the basis of our proposals regarding requirements for information dissemination and reporting requirements for tire manufacturers and for tire retailers. NHTSA requests comment on how to best communicate information to consumers before or during the tire purchasing process.

NHTSA's consumer research and the discussions at the UC Davis workshop revealed that many consumers make their choice of tire at the location of purchase with guidance from a sales associate. NHTSA's consumer research indicated, however, that many tire consumers do conduct research to determine specifications for their vehicle, and then visit a store or go online to compare tires of different specifications. Participants in the UC Davis workshop noted that many tire purchases are unplanned, where consumers needed to take immediate action to restore their vehicle. Consumers in NHTSA's focus group research made a distinction between buying replacement tires and buying tires because of an urgent need, *e.g.,* a flat tire. These consumers agreed that in the latter scenario, many steps that they may have undertaken before a planned purchase, *e.g.,* doing comprehensive research, were bypassed with the goal of getting a new tire in their price range immediately. UC Davis workshop participants, among them many tire retailers and tire manufacturers, further agreed that while some consumers do ''defensive'' research prior to scheduled or planned tire purchases in an attempt to avoid getting taken advantage of by sales associates, very few do ''offensive'' research such that they know precisely what tires they want.

NHTSA's consumer research found that the connection between fuel efficiency and tire selection was not brought up unaided. Even when prompted, many participants in the research did not feel there was a strong connection between the two. A few participants understood that inflated tires are safe, making the causal relationship between tire inflation and vehicle safety, which is understood by most. But after discussion and probing, more participants began to understand the connection and agreed tires impact fuel efficiency. While NHTSA's consumer research indicated that consumers are interested in the prospect of a rating system that would enable them to compare fuel efficiency of different tires, participants in the UC Davis workshop, which included tire retailers, tire manufacturers, and government organizations, generally agreed that price is the largest factor in most consumers' final tire purchasing decision.

C. What Are We Proposing To Require of Tire Retailers?

Based on NHTSA's understanding of the average tire purchaser and on the tire purchasing process generally, we believe that the most successful method of encouraging consumers to consider the new ratings at the point of sale is to have a poster in each tire retailer/dealer location that would be visible to consumers, to make consumers aware that there are comparative government tire ratings available for the passenger car tires they are considering. The poster would communicate the importance of comparing replacement tire ratings as well as the importance of proper tire maintenance.

Therefore, in today's notice we are proposing to require that tire retailers who have a display room, *i.e.,* those that present sample tires offered for sale to consumers, display a tire fuel efficiency consumer information program poster that NHTSA will print and provide to retailers. Some of the principles NHTSA is proposing be conveyed by the poster are:

- Your choice of tires you buy to put on your vehicle affects:
  - The gas mileage your vehicle will get,
  - The traction and other safety characteristics your vehicle can achieve, and
  - How long you can reasonably expect it will be before you'll have to buy another new set of tires.
- There is a new government program that requires new tires for cars, vans, and SUVs to have a paper label on the tire tread to show you the tire's rating for fuel efficiency, safety, and durability.
- Ask your dealer for the ratings for the tires you are considering for your vehicle.
- More information about this ratings program and a complete listing of the ratings for all these tires is available at *http://www.nhtsa.gov.*
- Whatever tire you choose, you need to keep it properly inflated to get the best fuel efficiency, safety, and tire life that the tire can deliver.

NHTSA seeks comment on these messages and solicits suggestions for poster design and the best means to convey information about the rating system and elicit interest in the ratings, keeping in mind the ultimate goal of assisting consumers in making more educated tire purchasing decisions.

The agency is proposing to make this poster available within 12 months of the issuance of a final regulation. At that time NHTSA will publish a **Federal Register** notice announcing the availability of the poster. We are proposing that a tire retailer will be able to comply with the requirement of displaying the poster either by downloading and printing it, in color and with the specifications from NHTSA's Web site, or by contacting the agency and requesting that we send the retailer a copy of the poster.

We are also proposing to require that tire retailers leave the paper label which displays the tire fuel efficiency rating graphic on the tire until the tire is sold.[143] This requirement would maximize the chance that consumers would see the label for the tire they are purchasing. NHTSA recognizes that at many tire retailers, the tires are mounted by the retailer itself and the consumer may never actually see the tires they purchase before they are on their vehicle. We are not proposing to require that tire retailers must show consumers the label for the tire they are going to purchase, but merely that the label is kept on the tire until sale. The agency would not hold a tire retailer responsible for accidental damage or delamination of a label, or for a manufacturer's failure to provide a label.

NHTSA is aware of the small business nature of many tire retailers and is sensitive to any burdens being placed upon tire retailers and dealers. The agency considered requirements that tire retailers show consumers the ratings for each tire that is available and being compared for potential purchase. However, the agency has tentatively concluded that the burdens associated with such requirements are not needed to implement an effective program. The agency seeks comments on any other

[142] The agenda and presentations from the roundtable can be seen at *http://eec1.ucdavis.edu/programs/transportation/tire-roundtable-nov-2008/tiresroundtable* (last accessed Mar. 6, 2009).

[143] *Note* that NHTSA uses the term ''paper label'' in the colloquial sense; many labels on tires are actually made of plastic.

information dissemination requirements that would ensure that easy-to-understand information is conveyed in a way that is most likely to impact consumers' decisions and, thus, affect their behavior and save them and our nation fuel and money.

D. What Are We Proposing To Require of Tire Manufacturers?

1. Data Reporting

We are proposing to require manufacturers to report to NHTSA for each tire that is individually rated under this tire fuel efficiency consumer information program the following data:

- Rolling resistance force (RRF), as computed from the ISO 28580 test (in Newtons) and followed in parenthesis by the equivalent pounds-force, *e.g.,* 5 Newtons (1.12 lbf).[144]
- Test load, as specified in the ISO 28580 test procedure (in Newtons) and followed in parenthesis by the equivalent pounds-force, *e.g.,* 5 Newtons (1.12 lbf).
- Rolling resistance rating (0–100), based on the formula in section VI.B.1 above.
- Traction 0–100 rating, based on the formula in section VI.B.1 above.
- Average peak coefficient of friction for asphalt, as measured during the UTQGS traction test procedure (49 CFR 575.104(f)).
- Average peak coefficient of friction for concrete, as measured during the UTQGS traction test procedure (49 CFR 575.104(f)).
- Adjusted peak coefficient of friction for asphalt (μ_{APA}), based on the formula in section VI.B.1 above.
- Adjusted peak coefficient of friction for concrete (μ_{APC}), based on the formula in section VI.B.1 above.
- Treadwear 0–100 rating, based on the formula in section VI.B.1 above.
- Wear rate of tested tire, as measured during the UTQGS treadwear procedure (49 CFR 575.104(e)).

There are several reasons NHTSA is proposing that the tire manufacturer submit these various measurements to the agency. First, this makes it straightforward for the agency to ensure compliance with the rating systems developed in this tire fuel efficiency consumer information program. These reporting requirements also permit the agency to assess the adequacy and appropriateness of the tolerance bands, as described in section XI of this notice. Additionally, NHTSA can use the force measurements to develop an accurate rolling resistance database that can be used for development of a calculator that consumers can use to estimate dollars of fuel saved either annually or over the average life of the tire, as explained in section VIII of this notice. Finally, the test load can be used to calculate rolling resistance coefficient if necessary or desirable.

We are proposing to require manufacturers to report to NHTSA the treadwear rating and the traction rating for each tire, on a 0 to 100 scale as discussed above in sections VI.A.2 and VI.A.3 because these ratings represent durability and safety for purposes of the national tire fuel efficiency consumer information program required by EISA. The agency is proposing that these ratings be based on the UTQGS test procedures for traction and treadwear. However, the agency remains open to considering other tests that may better represent and communicate information about safety and durability. As mentioned above, NHTSA requests comments on other test methods and metrics on which to base ratings of safety and durability.

We request comment on what format to require tire manufacturers to submit data. NHTSA intends to require submission of data in a uniform format to ensure that all information is provided, and for ease of database entry. NHTSA is proposing that the agency will design a Microsoft Excel template for data submission and will make this template available for download from the agency Web site. However, the agency is also looking into using an online data submission system and the possibility of creating one centralized location where tire manufacturers will submit all required data submissions, including tire fuel economy data submissions. The agency seeks comment on the feasibility of using both a spreadsheet template and an online data reporting system for having tire manufactures submit data for the fuel efficiency consumer information program ratings.

2. Tire Labels

We are also proposing two alternatives for tire manufacturers to present the required rating information on a paper label affixed to each subject replacement tire. First, a tire manufacturer may place the required rating graphic somewhere on the paper labels already required to be affixed to each individual tire by UTQGS requirements.[145] Second, a tire manufacturer could fulfill the tire fuel efficiency labeling requirements by affixing a separate paper label with just the tire fuel efficiency label graphic on it.

Regardless of which alternative is chosen by the tire manufacturer, we are proposing to specify a minimum size for the tire fuel efficiency rating system graphic (4.5 inches high and 5.5 inches wide) and that the graphic must be in color on the label.

The minimum size specification is proposed to ensure that the rating graphic will be legible on the label. The reason that we are proposing the graphic appear in color is because consumers reacted positively to the red shading on the lower/left side of the scale to indicate lower ratings, and to the green shading on the higher/right side of the scale to indicate higher ratings.

NHTSA requests comments on whether the label requirement should be more specific regarding precisely when tire manufacturers must affix the label.

E. Requirements for Tire Retailers and Tire Manufacturers With an Internet Presence

There are tire retailers with virtual storefronts, as well as retailers and manufacturers that maintain Web sites that consumers can use to research tires. Because NHTSA believes that many consumers use the Internet to do at least a minimal amount of research in some situations before they need to purchase tires, we are proposing to require that tire retailers and tire manufacturers that maintain Web sites must include a link to the comprehensive tire Web site that NHTSA plans to develop (*see* section VIII.B.4 below).

NHTSA requests comments on what additional requirements, if any, should apply to such Web sites. For example, should NHTSA require the Web site to include an electronic version of the poster NHTSA is proposing to require retailers with a display room to display? The poster would be provided in an electronic format by NHTSA when printed copies are provided as discussed above.

F. Uniform Tire Quality Grading Standards

As mentioned above, NHTSA has a tire rating system that has been in place since 1975, the uniform tire quality grading standards (UTQGS).[146] NHTSA established the UTQGS to fulfill a statutory requirement established by the National Traffic and Motor Vehicle

[144] While pounds-force (lbf) have been used throughout this NPRM since they are more familiar to the average U.S. consumer, the SI units of Newtons will be the official reporting unit. All proposed limits and values will be converted accordingly.

[145] *See* 49 CFR 575.104(d)(i)(B).

[146] *See* 49 CFR 575.104 (2008).

Safety Act of 1966.[147] This statutory requirement has been codified and amended to read as follows:

> The Secretary shall prescribe through standards a uniform quality grading system for motor vehicle tires to help consumers make an informed choice when purchasing tires. The Secretary also shall cooperate with industry and the Federal Trade Commission to the greatest extent practicable to eliminate deceptive and confusing tire nomenclature and marketing practices. A tire standard or regulation prescribed under this chapter supersedes an order or administrative interpretation of the Commission.[148]

The UTQGS, applicable to passenger car tires, require motor vehicle and tire manufacturers to provide consumers with information about their tires' relative performance regarding treadwear, traction, and temperature resistance. Manufacturers are required to rate their tires based on performance in specified test procedures, to report those ratings to NHTSA, to permanently mold those ratings onto sidewalls, to attach a label containing those ratings on replacement tires, and to provide information about the UTQGS with tires and new motor vehicles. The treadwear, traction, and temperature resistance characteristics were chosen by NHTSA for rating under the UTQGS because the agency believed they provided the best balance of tire properties for meaningful evaluation by consumers. As previously discussed for the characteristics affected by today's proposals, those characteristics interact with each other such that improvement of one of them could reduce performance of one of the others.

As NHTSA is proposing to base today's proposed safety and durability ratings on them, traction and treadwear were discussed above. The UTQGS temperature rating indicates the tire's resistance to the generation of heat and its ability to dissipate heat. Sustained high temperature can cause the material of the tire to degrade and reduce tire life, and excessive temperature can lead to sudden tire failure. Tires are tested under controlled conditions on a high-speed laboratory test wheel. Tires are graded A, B, or C, with A indicating an ability to dissipate heat at higher speeds. While grade C originally corresponded to a level of performance required for passenger car tires by FMVSS No. 109, new requirements in FMVSS No. 139 mean that few, if any, new tires perform below the level of grade B.[149]

In 1995, NHTSA proposed amendments to the UTQGS.[150] At that time, NHTSA proposed, based on comments from the public,[151] to remove the temperature resistance rating and to add a fuel efficiency rating. It was believed that the temperature resistance rating was not as well understood by consumers as the treadwear and traction ratings.[152] The rulemaking was terminated [153] because Congress placed a condition in NHTSA's 1996 appropriations Act that stated ''none of the funds appropriated by this Act may be obligated or expended to plan, finalize, or implement any rulemaking to add to [the UTQGS] any requirement pertaining to a grading standard that is different from the three grading standards (treadwear, traction, and temperature resistance) already in effect.'' [154] This language has been included in every DOT Appropriations Act since 1996.

In developing today's proposal under EISA, the agency considered the need and appropriateness of continuing the current UTQGS requirements. For the reasons discussed below, we have tentatively concluded that the current UTQGS requirements should either be removed, once tires meet the new EISA requirements, or amended to conform to the approach in today's EISA proposal.

For two of the three UTQGS ratings, today's proposal would establish parallel but different ratings. Thus, consumers would be receiving the same basic information, but in two different ways. For the treadwear rating, the durability rating proposed in this notice is simply a different way of expressing the same rating. For the traction rating, the safety rating proposed in this notice is based on the same test procedure; however, the ratings are based on different measurements, both of which are recorded by the equipment used in the UTQGS test procedure.

If the agency maintained the current UTQGS ratings in these areas, there would be concerns about consumer confusion as well as unnecessary duplication. For example, with both systems in place, a consumer would see one scale (*e.g.,* letter grades for traction) on the UTQGS label and on the tire sidewall, but on the tire fuel efficiency label the consumer would see a safety (*i.e.,* traction) rating on a different scale (0 to 100). Similarly, the consumer would get a treadwear grade on the UTQGS label and on the tire sidewall, but would get the same grade expressed on a different scale (0 to 100) on the tire fuel efficiency label.

As to the third UTQGS rating, *i.e.,* temperature resistance, NHTSA notes that 80 percent of current tires are graded either A or B. As discussed previously, the new performance standards for passenger car tires will result in only grade A or B tires in the market. Therefore, the rating does not provide much comparative information. Moreover, for reasons discussed in the 1995 NPRM,[155] we believe this rating has limited relevance to consumers.

Given the above discussion, we are requesting comments on two alternatives. Under the first alternative, the current UTQGS requirements would be removed once tires meet the new EISA requirements. While the new requirements we are proposing today would be issued under the authority of EISA, we believe the ratings system proposed in this document for durability (treadwear) and safety (wet traction) serve the same purposes as the corresponding existing UTQGS ratings.

We note that, unlike the current UTQGS requirements, manufacturers would not be required to permanently mold the EISA ratings onto tire sidewalls or provide information for tires on new motor vehicles. However, we have tentatively concluded that, given the purposes of both UTQGS and the EISA ratings, *i.e.,* helping consumers make informed choices in purchasing tires, and the ways that the relevant information would be available (including the paper label on replacement tires and a government Web site), these differences would not be a reason to maintain the current UTQGS requirements.

Under the second alternative, the current UTQGS requirements would be amended to conform to the approach in today's EISA proposal. We would replace the existing UTQGS treadwear and traction ratings with the ratings proposed in today's notice for durability (treadwear) and safety (wet traction), and the rating for temperature resistance would be removed. The requirement for UTQGS information to be provided on a tire tread surface label would be

[147] *See* National Traffic and Motor Vehicle Safety Act of 1966, Public Law 89–563, § 203, 80 Stat. 718 (1966) (codified as amended at 49 U.S.C. 30123(b)).

[148] 49 U.S.C. 30123(b).

[149] UTQGS requires tires to be rated a C if they perform at the lowest level in the UTQGS test. If a tire performs at a higher level the manufacturer *may* rate the tire a B. Therefore, while there may still be grade C tires on the market, NHTSA expects that the tires could be rated a B, based on the requirements of FMVSS 139.

[150] 60 FR 27472 (May 24, 1995).

[151] *See* Request for Comments, 59 FR 19686 (Apr. 25, 1994).

[152] *Id.* at 19689.

[153] *See* 61 FR 47437 (Sept. 9, 1996).

[154] Department of Transportation and Related Agencies Appropriations Act for Fiscal Year 1996, Public Law 104–50, 109 Stat. 436 (1995).

[155] *See* 60 FR 27472, 27478–27481.

written broadly enough that if the ratings were provided on the EISA label they need not be provided on a separate UTQGS label. Under this alternative, we would also remove the requirement for the UTQGS ratings to be molded on the tire sidewalls. We believe this requirement is duplicative and results in unnecessary costs. For replacement tires, the ratings would be provided on the paper label. While we question whether there is a need to provide this information for the tires on new vehicles, we request comments on this issue. We also request comments on the most appropriate way to require the information to be provided, should we decide to continue to do so. Finally, as part of this alternative, we would make any necessary conforming changes to the other UTQGS requirements.

We note that our proposed regulatory text does not include changes with respect to removing or revising the current UTQGS requirements. If this part of the proposal is adopted as a final rule, we would make the necessary changes in the final rule's regulatory text.

In developing this aspect of our proposal, we have specifically considered 49 U.S.C. 30123(b) (the statutory requirements concerning UTQGS), 49 U.S.C. 32304A (Consumer Tire Information, *i.e.,* the relevant part of EISA), and the current DOT Appropriations Act. As to the language of the DOT Appropriations Act, discussed earlier, we construe that language to prohibit us from adding to the UTQGS program any new grading standards beyond those currently in effect (treadwear, traction, and temperature resistance), but not from removing current standards or making minor modifications in the current standards, such as those discussed above under the second alternative. We note that the fuel efficiency rating proposed by today's document would be issued solely under the authority of EISA, *i.e.,* it would not be part of the UTQGS program under any of the alternatives we are considering.

VIII. NHTSA's Consumer Education Program

As noted elsewhere in the notice, section 111 of EISA requires that the tire fuel efficiency consumer information program for replacement tires include ''a national tire maintenance consumer education program including, information on tire inflation pressure, alignment, rotation, and treadwear to maximize fuel efficiency, safety, and durability of replacement tires.'' 49 U.S.C. 32304A(a)(2)(D). In order to develop the most effective communication materials to comply with this requirement, the agency conducted consumer testing in January 2009 on informational materials and potential tire labeling.[156] The goals of this research were to (1) explore reactions to consumer expectations for a tire fuel efficiency rating program; (2) measure feedback related to the effectiveness of the communication materials used to convey the tire labeling information; and (3) gauge consumer preferences of tire label designs presented to determine how best to design a consumer friendly label for the program. Consumers have expressed interest in ways this new information should be conveyed.

NHTSA is using consumer testing research to help maximize consumer understanding of the program and to develop communication materials to assist consumers in making more educated tire purchasing decisions. NHTSA requests comments on the most effective way to establish and implement a consumer education program to fulfill the statutory requirements and purposes behind today's proposed tire fuel efficiency consumer information program.

A. Previous Tire Consumer Education Efforts

NHTSA has long recognized the importance of consumer education in the area of tire maintenance. The Uniform Tire Quality Grading Standards (UTQGS) ratings, which are molded onto passenger car tire sidewalls, allow consumers to compare tire treadwear, traction performance, and temperature resistance. UTQGS consumer information includes a booklet published annually with comparative UTGQS ratings for all passenger car tires. NHTSA's consumer based Web site, Safercar.gov, features a tire lookup database with these comparative ratings to assist consumers in purchasing new or replacement vehicle tires.[157]

The *What's Your PSI?* campaign launched in 2005 challenged consumers to learn the correct pressure for their vehicle's tires and to help them maintain proper pressure. Campaign materials included a brochure distributed by tire safety partners throughout the country and interactive online tire quiz. These materials are available online through the Safercar.gov Web site.[158]

In 2008, NHTSA revised the *Tire Safety: Everything Rides On It* brochure, published in 2001. This brochure was published as a consumer information tool to inform vehicle owners of tire pressure, load limits, and maintenance. It is also a guidebook that helps consumers make informed decisions on tire repair and maintenance procedures.[159] The agency has partnered with industry and retail partners to distribute the brochure. Additionally in 2008, NHTSA urged drivers to check their tires during hot weather via a public service announcement (PSA). The PSA was featured on NHTSA.gov and Safercar.gov, warning of potential tire failure associated with under-inflation.

B. Potential Future Consumer Education Efforts

1. What Information Should NHTSA Convey?

In addition to the information dissemination requirements for tire manufacturers and tire retailers discussed above in section VII of this notice, NHTSA intends to actively communicate the importance of tire maintenance generally, including tire inflation pressure, alignment, rotation, and other tire issues.

All tires require proper inflation and maintenance to achieve their intended levels of efficiency, safety, wear, and operating performance.[160] NHTSA has previously addressed the importance of proper tire inflation to safety and fuel economy through PSAs. Additionally, in 2005, NHTSA published a final rule mandating tire pressure monitoring systems (TPMS) for all new automobiles by the 2008 model year.[161] TPMS, however, is no substitution for proper tire maintenance. Despite the fact that all new vehicles are equipped with a TPMS, NHTSA believes that proper tire maintenance is still the most important information to convey to consumers. Smaller reductions in inflation pressure than measured by the TPMS can affect not only fuel efficiency, but also tire lifespan and vehicle handling.

While past consumer information efforts have been effective in communicating the importance of tire safety and maintenance, the agency

[156] NHTSA Rolling Resistance Focus Group Report (January 2008). This report will be posted to the docket.

[157] *See http://www.safercar.gov/portal/site/safercar/menuitem.13dd5c887c7e1358fefe0a2f35a67789/?vgnextoid=9f4baa8c16e35110VgnVCM1000002fd17898RCRD.*

[158] *See http://www.safercar.gov/portal/site/safercar/menuitem.13dd5c887c7e1358fefe0a2f35a67789/?vgnextoid=eac9aa8c16e35110VgnVCM1000002fd17898RCRD.*

[159] *See http://www.nhtsa.dot.gov/cars/rules/tiresafety/ridesonit/tires_index.html.*

[160] 2006 NAS Report, *supra* note 4, at 5.

[161] *See* 70 FR 18136 (April 8, 2005).

plans to improve on these efforts by using innovative methods of dissemination for a new national tire fuel efficiency consumer information program. According to the agency's recent research, consumers reacted positively to receiving this information in the following ways: Point of sale, interactive mediums, and via the Internet.

2. Point of Sale

While NHTSA is partially addressing the presentation of consumer education information through the requirements for manufacturers and tire retailers proposed in today's notice, tire fuel efficiency rating information may additionally be displayed at kiosks, on overhead posters, tire plaques, or in advertisements at the point of purchase (everywhere tires are sold—tire retailers, dealers, online, manufacturer Web sites). These displays would highlight key information to be aware of and useful tips to note when shopping to buy replacement tires. NHTSA plans to develop informative posters and brochures that it will make available on its Web site for tire manufacturers and tire retailers to download and make available to educate consumers.

Moreover, as noted above, the agency plans to provide specific size and design requirements for a paper label with fuel efficiency, safety, and durability ratings to accompany each tire. A template would be supplied to tire manufacturers for their inclusion of these ratings on the label. A similar agency program, *Stars On Cars,* requires manufacturers to post vehicle crash test rating information on a vehicle's window sticker.

3. Interactive Mediums

NHTSA's consumer research shows that a calculator that would show the amount of fuel and money a driver would save by buying a higher rated fuel efficiency tire annually, or over the estimated lifetime of the tire, appeals to consumers. This calculator might be available online, at a dealership, or a tire retailer. Using the calculator, a consumer could select tires to compare, enter the fuel economy of their vehicle (mpg) and the average number of miles they drive each year and even the dollar amount they are paying for fuel and get a calculation of differences in fuel usage and/or money saved for the tires under comparison. In the example shown in Figure 14, gallons saved is calculated assuming Tire A provides the input gas consumption and Tire B provides the average gas savings per pound force found in the NHTSA study (~0.085% per pound).

Miles per gallon of Your Vehicle	25	
Miles per Year You Drive	10000	
	Tire A	Tire B
Efficiency Rating	50	60
Gallons per Year You Can Save		12

Figure 14. Example Calculation for Consumer Comparison

4. Web Site Development

The agency's Safercar.gov consumer Web site currently provides information on tire safety. Due to the amount of content available on tires, NHTSA plans to consolidate all tire information into a dedicated one-stop micro-site focusing on tires. The core message of the site would be tire maintenance—information on its importance in terms of safety, fuel efficiency, tire life and vehicle handling as well as tips on how best to maintain tires. The site would then make it easier for a consumer to locate various information regarding tires.

The new site would also be the location for all of NHTSA's information about tire fuel efficiency. From its new comprehensive tire Web site, NHTSA also plans to link to other government Web sites that discuss energy efficiency and consumer products and appliances, so that upon visiting the government's comprehensive tire Web site, consumers have the opportunity to learn about fuel efficient vehicles, energy saving practices, and the energy efficiency of other consumer products, as well as fuel efficient tires. These may include, but are not limited to, EPA's Green Vehicle Guide, *http://fueleconomy.gov,* and the government's Energy Star Web site.

NHTSA plans to develop a link to Frequently Asked Questions (FAQs) about the tire fuel efficiency rating system. Similar to the UTQGS tire lookup tool on Safercar.gov, NHTSA plans to develop a Web-based tire fuel efficiency search database, which would be a useful tool for consumers to compare tires prior to visiting a retailer.

The database would also be a site for retailers to obtain information to assist their customers. A dealer could satisfy the proposed requirements to have ratings information available when presenting comparative tire information by providing a computer kiosk linked to NHTSA's Web site for customers to use while in their store.

5. Paper Brochure Materials

NHTSA intends to publish a brochure to inform consumers about the tire fuel efficiency ratings program, where to obtain the ratings, as well as other related information. NHTSA would make this brochure available on its Web site for tire retailers who wish to print it and use it in their stores. The agency will also explore other avenues of distribution to inform future tire purchasers of the availability of this new information. Promoting awareness of this tire information will allow

consumers to spend time carrying out research prior to visiting a tire retailer.

6. Partnership Development

NHTSA will work with existing partners and identify new ones to help promote tire fuel efficiency campaign messages. NHTSA will seek to partner with any interested tire retailers, State or local governments, as well as manufacturers who share NHTSA's goal of promoting the importance of proper tire maintenance. NHTSA will also seek to partner with any interested universities or high schools who may wish to educate students regarding tire fuel efficiency or proper tire maintenance. Many high school and college students have used vehicles with replacement tires and, thus, they are definitely a target audience for consumer education regarding proper tire maintenance.

These partners will help to distribute those messages to a broader audience than the agency can do alone. These third-party relationships also build credibility and awareness among the media, which in turn helps expand reach. The agency will develop a toolkit that partners can use when packaging materials for consumer education efforts.

Further, EPA's SmartWay program has experience in transportation marketing and forming partnership programs.[162] EPA has experience with general public outreach and has reached out to NHTSA seeking to integrate NHTSA's tire fuel efficiency consumer information program with EPA's similar efforts in its SmartWay Transport program. NHTSA and EPA believe that a more integrated outreach effort from the Federal government will best assist consumers in educating themselves about tire maintenance and fuel efficiency, and thus in making more informed purchasing decisions.

7. Exhibits and Conferencing

NHTSA currently exhibits at a number of auto-related shows and conferences throughout the year. These shows provide an opportunity to distribute campaign materials and interface with consumers interested in vehicle safety information. NHTSA also gives consumers a walkthrough of agency Web sites to demonstrate how to find information. NHTSA will use these conference environments to promote the tire fuel efficiency consumer education program.

The agency also plans on looking into distributing educational flyers promoting NHTSA's tire education Web site to highly congested events where large amounts of people drive their vehicles to attend, such as professional sporting events.

8. Local Education Programs

NHTSA proposes to establish a line of communication with its regional and local offices and develop a plan that reaches out to the local universities and high schools in the States to deliver presentations made available by NHTSA officials. NHTSA plans to distribute educational material such as brochures and FAQs to each student body. The reason NHTSA wishes to reach out to university and high school students, is because the agency believes that this target audience highly uses replacement tires.

IX. Costs and Benefits

A. Costs [163]

There are three sets of costs involved for manufacturer: Costs to test tires to obtain rating information, costs of the consumer information and, assuming the program drives the market to demand different tires, costs to improve tires. Costs for the first two categories are estimated to be around $10.5 million annually, with one-time costs of around $4 million.

As discussed more thoroughly below under benefits, the costs for the third category are difficult to estimate. There are many different ways that a manufacturer might choose to improve the rolling resistance rating of their tires. The agency estimates that the increased cost at the consumer level of such improvements is $2.00 to $4.00 per tire for tires subject to this regulation if all other tire properties were held constant.[164] However, total costs for this category are dependent on market demand for different tires as a result of this program. The PRIA estimates that between 2 and 10 percent of the targeted tire population will be improved as a result of the proposal. Under this assumption and using a cost of $3 to improve the rolling resistance of one tire, the costs to improve tires are estimated to be between $8.4 and $42 million. The agency requests comments on this cost estimate.

Based on a report from Smithers Scientific Services, Inc. presented at the February 5, 2009 Staff Workshop for the California Energy Commission's Fuel Efficient Tire Program, there are 20,708 tires that would need to be tested initially to provide information. If each one of these were tested once for tire rolling resistance, the initial costs to the industry would be $3,727,000. Based upon the average number of reports the agency receives under the UTQGS program, the agency estimates that 125 new/redesigned tires will need to be tested annually, for ongoing testing costs of $22,500. Since the UTQGS already requires testing for treadwear and traction, those costs are already in the baseline and are not incremental costs of this proposal.

Information program costs include manufacturer costs to report information to NHTSA and to label tires. Tire manufacturers are required to provide information to NHTSA on the rating system. We are proposing to require manufacturers to report to NHTSA for each tire that is individually rated under this tire fuel efficiency consumer information program data on each of the three ratings: fuel efficiency, traction, and treadwear. In the early warning system (EWR) there are 28 tire manufacturers that report. Each manufacturer will need to set up the software in a computer program to combine the testing information, organize it for NHTSA's use, *etc.* We estimate this cost to be a one-time charge of about $10,000 per company. In the EWR analysis, we estimated the annual cost per report per tire manufacturer to be $287. There are also computer maintenance costs of keeping the data up to date, *etc.* as tests come in throughout the year. In the EWR analysis,[165] we estimated costs of $3,755 per year per company. Thus, the total annual cost is estimated to be $4,042 per company, and $280,000 + $113,176 = $393,176 for the first year and $113,176 as an annual cost for all 28 tire manufacturers.

The proposal also requires a color label to be added to the current label that is glued onto a tire. The label will have the three scales in color and other information. We estimate the incremental cost of adding the color label to the existing label to be $0.05 per tire. We assume it will not change the way the label is attached to the tire, so

[162] *See http://www.epa.gov/smartway/index.htm* (last accessed June 4, 2009).

[163] All costs discussed below are presented in 2008 economics.

[164] This is the cost to reduce rolling resistance by 10 percent from today's average replacement tire rolling resistance, holding other tire properties constant. Using silica is a well known method. There are a variety of ways to improve rolling resistance and not hold other properties constant, with different cost implications. That is one reason that the agency feels it is important to have rolling resistance, traction, and treadwear on the same label.

[165] Preliminary Regulatory Evaluation, Tread Act Amendments to Early Warning Reporting Regulation Part 579 and Defect and Noncompliance Part 573, August 2008, (Docket No. 2008–0169–0007.1).

will not result in additional labor at the tire manufacturer plant.

There are roughly 200 million replacement tires sold per year.[166] We estimate that 5 percent (10 million) of the replacement tires are LT tires, and therefore not covered by this proposal, and 4.5 percent (9 million) of the replacement tires are snow tires or other types of tires that are exempt from the consumer information program. Thus, the cost to provide consumer information on a label is estimated to be $9.05 million ($0.05*181 million).

For tire retailers, the agency estimates that this proposal would have no cost. The only proposed requirements for retailers are to leave the label on the tire until it is sold and to display a poster. Since manufacturers will supply the label, and NHTSA will supply the poster, there should be no cost to retailers.

There are three sets of costs to the government: Enforcement costs, costs for maintaining the Web site, and costs to provide the poster to retailers. NHTSA anticipates spending $730,000 annually to do compliance testing for this program. Based on costs for the existing areas of the NHTSA Web site, NHTSA estimates that it will cost approximately $550,000 per year to set up and update the part of the Web site to include information on 20,000 tires. For the poster, NHTSA currently provides a booklet to tire dealers with the UTQGS information. That booklet is on 8.5″ x 11″ paper and is 141 pages long. The printing costs are $3,190 per year. NHTSA anticipates that providing the posters would be a similar expense. Therefore, the combined costs to the government are estimated to be $1.28 million.

B. Benefits

There are three categories of *potential* benefits (or disbenefits) from this rule: Fuel economy, safety and durability. For each of these categories a significant unknown is likely consumer behavior in response to this program, and as a result of that, likely manufacturer reaction. For example, if consumers value fuel efficiency but are unwilling to increase the price they pay for tires, tires with improved fuel efficiency but decreased safety and/or durability may enter the market. If consumers care most about safety, and if there is a tradeoff between fuel economy and safety, one effect of this rule may be to increase safety while decreasing fuel economy. NHTSA would have to quantify the value of all three categories of benefits/disbenefits under such a scenario and construct a range of likely scenarios to calculate the combined potential benefits of this rule. Other scenarios can also be imagined. NHTSA requests comments on how it might more narrowly analyze the uncertainty regarding the anticipated outcomes of this proposal.

In addition to the unknown reactions of consumers and manufacturers, calculating benefits is complicated by several additional factors. We explain these additional complications for each of the three rating systems in the remainder of this section. In each of these discussions we consider how to compute the benefit of a difference of X points on the particular rating scale.

For fuel economy, one of the reasons the agency is basing the fuel efficiency rating on RRF rather than RRC is that it allows the program to readily provide consumers with a statement such as ''a difference of X on the fuel efficiency rating scale equates to Y gallons of fuel saved.'' To calculate benefits for an individual tire purchase, if the driver knows the baseline fuel economy of the vehicle the tires will be mounted on, the fuel efficiency rating of the existing tires, the fuel efficiency rating of the replacement tires, and the number of miles driven annually, the driver can calculate the reduction (or increase) in the number of gallons of fuel the driver will need to operate the vehicle for a year. By using fuel price forecasts, you can estimate the cost of that fuel, and make an economic decision about whether or not to buy those replacement tires.

To calculate fuel savings benefits for this rule, we would need to know how many consumers are likely to purchase lower (or higher) fuel efficiency rated tires as a result of the information in this program and the average reduction (or increase) in rolling resistance of the tires they purchase. The agency is planning to do additional consumer testing or other means to help it estimate the expected consumer reaction to this program. The PRIA develops hypothetical estimates assuming that between 2% and 10% of targeted tires are improved and that the average reduction in rolling resistance among improved tires is between 5% and 10%. Under these assumptions, the proposal is estimated to save between 7.9 and 78 million gallons of fuel and prevent the emission of 76,000–757,000 metric tons of CO_2 annually. The values of the fuel savings are between $22 million and $220 million at a 3 percent discount rate and between $20 million and $203 million at a 7 percent discount rate. The agency requests any information commenters may have about how to estimate consumer reaction and fuel savings.

Benefit estimates for the safety rating are more difficult to quantify. As noted, information is lacking about likely consumer responses to the proposed label. Even if such information were available, it is not as straight forward as it is for a fuel efficiency rating to develop a rule of thumb for the safety rating scale such as ''each difference of X on the safety rating scale equates to Y percent fewer crashes and Z dollars less in resultant economic damages.'' One possible way to do this would be to try and correlate a rating with a set stopping distance, and then estimate the reduction in crash injuries and fatalities resulting from a given reduction in stopping distance. The latter could be done by developing an injury probability profile for crashes as a function of impact speed (Delta-V) and measure the change in Delta-V that would occur when braking distance is changed. The agency has used this method to measure safety impacts in 2 previous rulemakings, those for Tire Pressure Monitoring Systems (TPMSs),[167] and for truck trailer braking improvements.[168]

However, these calculations are complicated by the fact that they depend on other factors (in addition to the traction rating of the tires) such as the handling characteristics of the vehicle on which they are mounted, the force with which the brakes are applied, and the loading of the vehicle. To put a tire's safety rating information on an economic scale, all of these characteristics would have to be assumed for all tires. But in reality, there is not a single vehicle that all replacement tires can be mounted on. We invite comments on these important issues, but we are concerned that the difference between two such tire safety ratings would not reflect the same economic difference in terms of safety, where the tires were mounted on two different types of vehicles. What we can communicate with the proposed rating is that tires with better traction ratings stop in less distance than tires with worse ratings. And as noted, the societal safety impacts depend on consumer and

[166] According to Modern Tire Dealer in 2008, there were 198 million replacement tires sold. *http://www.moderntiredealer.com/FAQ/.*

[167] Final Economic Assessment, Tire Pressure Monitoring System FMVSS No. 138, Office of Regulatory Analysis and Evaluation, Plans and Policy, National Highway Traffic Safety Administration, U.S. Department of Transportation, Washington, DC. (March, 2002), Docket No. NHTSA–2002–8572–0216.

[168] Final Regulatory Impact Analysis, FMVSS No. 121, Air Brake Systems Amending Stopping Distance, Office of Regulatory Analysis and Evaluation, National Center for Statistics and Analysis (Not Yet Published).

manufacturer reactions to the program. We seek comments on all of these questions.

For durability, the rating is a relative rating compared to a control tire, which would be rated 10 on our scale. A tire rated 20 should last twice as long as a tire rated a 10 and so forth. Several assumptions would need to be made to develop a rule of thumb for the durability rating scale of the form ''each difference of X on the durability rating scale equates to equates to a reduction of $Y in tire purchases over the lifetime of the vehicle.'' Tire lifetimes are complicated by factors such as: The vehicle the tire is mounted on, driving habits, tire maintenance, weather/environment/temperature, *etc.* NHTSA could however come up with a set scenario and come up with mileage estimates if the tires are driven as in that scenario. Drivers could translate that into a reduction in tire purchase costs over the lifetime of a vehicle given the price of the tires being considered—a $50 tire that is expected to last 10,000 miles would have the same expected lifetime cost (over the life of a vehicle) as a $100 tire that is expected to last 20,000 miles.

X. Lead time

While manufacturers currently calculate the rolling resistance of at least some tires for vehicle manufacturers to use when selecting which tires to equip new vehicles with, NHTSA believes that lead time is necessary for tire manufacturers to conduct additional testing and to prepare rating information for all affected tires. In addition, time will be necessary for NHTSA to collect all reported rating information into a database and to prepare consumer information materials.

On February 5, 2009, at a CEC staff workshop on their Fuel Efficient Tire Program, Smithers Scientific Services, Inc. (Smithers) presented the results of research done for the CEC to evaluate test facility capacity to conduct rolling resistance testing. Smithers based their analysis on current availability at independent laboratories, and also an estimate of test machine availability at manufacturer-owned laboratories. Depending on the scenario evaluated, they estimated that testing all affected tires would take 0.7 to 8.2 years.

NHTSA notes that Smithers' evaluation included some factors that are different from today's proposed Federal program. First, Smithers assumed that three tests would be required for each tire, while the program we are proposing today would only require a single test. Second, the proposal was based on estimates of both passenger car and light truck tires, while today's proposal only applies to passenger car tires.[169] Adjusting for these two factors, the Smithers data would suggest that manufacturers need 0.2 to 2.4 years to test one replacement passenger car tire of each different size specification, as proposed in this notice.

NHTSA believes this number may still be an over-estimate of the time needed to test and rate all tires affected by this proposed program. Based on our research, NHTSA estimates it may be possible that less than 25 percent of the affected tires will have to be tested in accordance with the ISO 28580 procedures in order to rate them for this program. It is likely that manufacturers will be able to develop equations to calculate the effect of differences in tread pattern, *etc.,* and use those equations to compute the test results from ISO 28580 from other tires that have been tested. Tire manufacturers will be able to extrapolate estimates of the test procedure values from knowing the test procedure values of similar sized tires. In addition, manufacturers already have rolling resistance information on many, if not all tires, as this information is used by vehicle manufacturers when choosing which tires to install as original equipment. Even if these data were gathered using other test methods, NHTSA's research shows that equations can translate the data to the test procedure specified in this rule. Recognizing that the deadlines imposed by Congress in EISA indicate a desire to have information available to consumers as quickly as possible, NHTSA is therefore proposing to require manufacturers to report on all existing tires within 12 months of the issuance of a final regulation.

For new tires introduced after the effective date of this rule, NHTSA is proposing to require reporting of information at least 30 days prior to introducing the tire for sale, as is required for UTQGS information.

Regarding the poster NHTSA is proposing to require in retailers that have a display room, the agency is proposing to make this poster available within 12 months of the issuance of a final regulation. At that time NHTSA will publish a **Federal Register** notice announcing the availability of the poster. The agency is proposing that a tire retailer must have the poster on display within 60 days of the issuance of the notice of availability in the **Federal Register**. We are proposing that a tire retailer will be able to comply with the requirement of displaying the poster either by downloading and printing it, in color and with the specifications from NHTSA's Web site, or by contacting the agency and requesting that we send the retailer a copy of the poster.

For tire retailers and tire manufacturers with an Internet presence, NHTSA is proposing that those Web sites link to NHTSA's tire Web site within 12 months of the issuance of a final regulation. NHTSA will provide the direct link to the comprehensive tire Web site in that final regulation.

XI. Compliance Tolerances

The test procedure proposed in this notice is the one NHTSA will use for compliance testing. Today's notice also proposes tolerances for RRF, traction, and treadwear which indicate what NHTSA is proposing to consider a noncompliance for the reporting and rating requirements if there is a difference between NHTSA's test result and a reported rating. In establishing tolerances, at this state of the rulemaking process, the agency has considered the repeatability of a tire tested as well as the variability of machine-to-machine tests, lab-to-lab tests, and the potential for different results due to different manufacturing dates.

For UTQGS, NHTSA specifies a test procedure for each rating. For traction and temperature resistance, the regulation then sets a performance level at which the tire must be rated a C, and higher levels at which the manufacturer may rate it a B, A, or in the case of Traction AA. The regulation was written this way as an acknowledgement of some level of necessary variability in the manufacture of tires. For tires that perform near a performance level that would allow a higher traction grade, the regulation allows the manufacturer to ''underrate'' to allow for the possibility that NHTSA might select a tire for compliance testing that would perform at the lower level.

For a consumer that purchases, for example, a B-rated tire and receives a tire that actually performs better than expected, there is no concern. However, there is some concern that a consumer may choose to pay extra for a B-rated tire when a comparable tire is ''underrated'' as a ''C.'' Thus, for the UTQGS definition of compliance, there is a risk that ratings information communicated will not be accurate.

Section 111 of EISA added a new sub-provision to 49 U.S.C. 32308 (General prohibitions, civil penalty, and enforcement) which provides for civil

[169] Smithers estimated that there were 62,124 passenger car tires and 9,888 light truck tires that would need to be tested.

penalties of not more than $50,000 for each violation of the tire fuel efficiency provisions. 49 U.S.C. 32308(c). Given this, in deciding how to define what would be considered a noncompliance for the tire fuel efficiency program, NHTSA tentatively has the concern that the program not result in a situation where NHTSA would be taking enforcement action against a manufacturer for the safety and durability ratings under this program, when enforcement action would not be warranted for UTQGS ratings based on the same test procedures. For this reason, NHTSA is proposing to require the ratings reported by a manufacturer under this proposed rule must be less than or equal to the rating determined by the agency using the procedures specified in this rule.

However, as discussed previously, NHTSA's research allows the agency to quantify the range of most of the variability that can be expected when determining the RRF value for a tire. Similarly, based on NHTSA experience conducting the traction and treadwear tests for the UTQGS program, NHTSA believes it can determine the range of variation for the safety and durability ratings proposed in this rule. NHTSA is requesting comments on a requirement which would require the ratings reported by a manufacturer to be within a specified tolerance limit as explained below for each rating. Because of the concern with the accuracy of the information being reported in this program, NHTSA is also seeking comment on whether to consider a non-compliance to exist when NHTSA's test value results in rating that is outside the tolerance band, but is higher than the rating reported by tire manufacturer.

A. Fuel Efficiency

For the fuel efficiency rating, the agency is proposing a tolerance for compliance purposes of plus and minus (±)5.5 percent of the rating set by the manufacturer. The agency bases this tolerance on an analysis of in-house test data to date, while considering the machine variability specification under ISO 28580, which is 0.05 Newtons per kiloNewton (N/kN) for RRC.

The agency selected a percentage tolerance because test data revealed that the variability of testing a tire increases as the load rating of the tire increases; this was found on multiple tests of the same tires. It was found that the variability for a passenger car tire with a mid-range load index had variability around the mean of ±0.66 pounds-force (lbf) which translated to 95 percent of the data being within ±5.5 percent of the mean. A similar analysis revealed that the same ±5.5 percent was an effective tolerance for the tires of lower and of higher load ranges, as well. So, a small tire tested repeated times would reveal small RRF variations, but within ±5.5 percent of the mean, and a large load range tire revealed larger RRF variations, but also within ±5.5 percent range of its respective mean.

So for compliance purposes, the agency is proposing that the RRF rating established by the manufacturer must be between ±5.5 percent of the RRF revealed from agency testing. The agency acknowledges that any RRF will be obtained from a tire that is different from the tire or tires that the manufacturer used to establish the reported RRF. In these cases, there will be new variability introduced into the compliance testing of a production tire from such factors as from machine-to-machine tests, lab-to-lab tests, different manufacturing dates, different batches of material, and possibly at different manufacturing plants. The agency does not have sufficient data to comprehensively establish tolerances considering these factors, so the agency solicits comments and proposals for a tolerance that considers these factors, and requests that wherever possible, supporting data is provided. The manufacturer will be required to submit to the agency the RRF and the rating for each tire.

B. Safety

The calculation of the safety (*i.e.,* traction) rating is discussed in detail in section VI.B.1 of this notice. For compliance purposes, the agency is proposing that the adjusted peak coefficient of friction for asphalt (μ_{APA}) and the adjusted peak coefficient of friction for concrete (μ_{APC}) must individually be between ±0.06 of the respective peak coefficients of friction revealed from agency testing. These proposed tolerances are based on agency test data wherein peak coefficients of friction for asphalt and concrete were recorded, and the average and standard deviation calculated for each.[170] The standard deviation was doubled and assigned a plus/minus tolerance to capture 95 percent of the data for the tested tires for each surface; the tolerance for the concrete was ±0.06, and the tolerance for the asphalt was also ±0.06.

The agency acknowledges that any adjusted peak coefficient of friction result will be obtained from a tire that is different from the tire or tires that the manufacturer used to establish the reported adjusted peak coefficient of friction. In these cases, there will be new variability introduced into the compliance testing of a production tire from such factors as from machine-to-machine tests, lab-to-lab tests, different manufacturing dates, different batches of material, and possibly at different manufacturing plants. The agency does not have sufficient data to comprehensively establish tolerances considering these factors, so the agency solicits comments and proposals for a tolerance that considers these factors, and requests that wherever possible, supporting data is provided.

The agency also considered another approach to the safety (*i.e.,* traction) rating calculation, and the agency solicits comment on this approach, as well. This approach would require the manufacturer to report to the values for both the peak and sliding (or locked-wheel) coefficients of friction for both concrete and asphalt for each separately rated tire. For each testing surface, the manufacturer will report the coefficient acquired on that surface and a rating that is calculated by dividing the average peak coefficient from the test tire by the average peak coefficients from the control tires, times 100. The data would be weighted based on the sequence of the test (candidate) tires (T) and control (standard) tires (C). For example if the test order was C1–T1–T2–C2, then the value used in obtaining the rating for the first test tire would be T1/(⅔ C1 + ⅓C2) and for the other test tire T2/(⅓ C1 + ⅔C2), each multiplied by 100. This gives a value based on the relationship of the test tire and the control tires that ran with it. This rating (one for asphalt and one for concrete) would be added together and normalized on a 1 to 100 scale for the final safety rating.

C. Durability

As explained above in section VI.B.1, NHTSA is proposing calculating a durability (*i.e.,* treadwear) rating by taking the UTQGS treadwear rating (as specified in 49 CFR 575.104), and dividing by 10. For compliance testing, the agency is proposing a tolerance on the UTQGS wear rate of the tire of ±2.5 mils per 1,000 miles as defined in 49 CFR 575.104(e).

The agency proposes this compliance tolerance based on the wear rates measured on the ASTM E1136 Course Monitoring Tire (CMT) from testing as specified in 49 CFR 575.104(e). When

[170] *See* National Highway Traffic Safety Administration, NHTSA Tire Rolling Resistance Rating System Test Development Project: Phase 2—Effects of Tire Rolling Resistance Levels on Traction, Treadwear, and Vehicle Fuel Economy (February 2009). This Phase 2 research report will be placed in the docket.

analyzed, the data revealed the standard deviation to be 0.84 mils per 1,000 miles, and normally, the agency would consider ±2 standard deviations (1.6 mils per 1,000 miles) to be a suitable tolerance, which would capture 95 percent of the data around the average wear rate. However, the CMT is a limited production tire made to tightened specifications, and the agency believes that this justifies an expansion of the tolerance to ±3 standard deviations (2.5 mils per 1,000 miles) which will capture 99 percent of the data around the average wear rate. For compliance purposes, the wear rate established by the manufacturer must be between ±2.5 mils per 1,000 miles of the wear rate revealed from agency testing.

The agency acknowledges that any wear rate result will be obtained from a tire that is different from the tire or tires that the manufacturer used to establish the reported wear rate. In these cases, there will be new variability introduced into the compliance testing of a production tire from such factors as from machine-to-machine tests, lab-to-lab tests, different manufacturing dates, different batches of material, and possibly at different manufacturing plants. The agency does not have sufficient data to comprehensively establish tolerances considering these factors, so the agency solicits comments and proposals for a tolerance that considers these factors, and requests that wherever possible, supporting data is provided. The manufacturer will be required to submit to the agency the wear rate from testing and the durability rating it assigned for each tire.

XII. Regulatory Alternatives

Throughout sections specific to various portions of the tire fuel efficiency consumer information program for replacement tires, NHTSA has discussed other options considered by the agency.

XIII. Public Participation

How Do I Prepare and Submit Comments?

Your comments must be written and in English. To ensure that your comments are correctly filed in the Docket, please include the docket number of this document in your comments. Your comments must not be more than 15 pages long.[171] We established this limit to encourage you to write your primary comments in a concise fashion. However, you may attach necessary additional documents to your comments. There is no limit on the length of the attachments.

Please submit your comments by any of the following methods:

- *Federal eRulemaking Portal:* Go to *http://www.regulations.gov.* Follow the instructions for submitting comments on the electronic docket site by clicking on ''Help'' or ''FAQ.''
- *Mail:* Docket Management Facility, M–30, U.S. Department of Transportation, West Building, Ground Floor, Rm. W12–140, 1200 New Jersey Avenue, SE., Washington, DC 20590.
- *Hand Delivery or Courier:* West Building Ground Floor, Room W12–140, 1200 New Jersey Avenue, SE., between 9 a.m. and 5 p.m. Eastern Time, Monday through Friday, except Federal holidays.
- *Fax:* (202) 493–2251.

If you are submitting comments electronically as a PDF (Adobe) file, we ask that the documents submitted be scanned using Optical Character Recognition (OCR) process, thus allowing the agency to search and copy certain portions of your submissions.[172]

Please note that pursuant to the Data Quality Act, in order for substantive data to be relied upon and used by the agency, it must meet the information quality standards set forth in the OMB and DOT Data Quality Act guidelines. Accordingly, we encourage you to consult the guidelines in preparing your comments. OMB's guidelines may be accessed at *http://www.whitehouse.gov/omb/fedreg/reproducible.html.* DOT's guidelines may be accessed at *http://dmses.dot.gov/submit/DataQualityGuidelines.pdf.*

How Can I Be Sure That My Comments Were Received?

If you submit your comments by mail and wish Docket Management to notify you upon its receipt of your comments, enclose a self-addressed, stamped postcard in the envelope containing your comments. Upon receiving your comments, Docket Management will return the postcard by mail.

How Do I Submit Confidential Business Information?

If you wish to submit any information under a claim of confidentiality, you should submit three copies of your complete submission, including the information you claim to be confidential business information, to the Chief Counsel, NHTSA, at the address given above under **FOR FURTHER INFORMATION CONTACT**. When you send a comment containing information claimed to be confidential business information, you should include a cover letter setting forth the information specified in our confidential business information regulation.[173]

In addition, you should submit a copy, from which you have deleted the claimed confidential business information, to the Docket by one of the methods set forth above.

Will the Agency Consider Late Comments?

We will consider all comments received before the close of business on the comment closing date indicated above under **DATES**. To the extent possible, we will also consider comments received after that date. Therefore, if interested persons believe that any new information the agency places in the docket affects their comments, they may submit comments after the closing date concerning how the agency should consider that information for the final rule.

If a comment is received too late for us to consider in developing a final rule (assuming that one is issued), we will consider that comment as an informal suggestion for future rulemaking action.

How Can I Read the Comments Submitted by Other People?

You may read the materials placed in the docket for this document (*e.g.,* the comments submitted in response to this document by other interested persons) at any time by going to *http://www.regulations.gov.* Follow the online instructions for accessing the dockets. You may also read the materials at the Docket Management Facility by going to the street address given above under **ADDRESSES**. The Docket Management Facility is open between 9 a.m. and 5 p.m. Eastern Time, Monday through Friday, except Federal holidays.

XIV. Regulatory Notices and Analyses

A. Executive Order 12866 and DOT Regulatory Policies and Procedures

Executive Order 12866, ''Regulatory Planning and Review'' (58 FR 51735, Oct. 4, 1993), provides for making determinations whether a regulatory action is ''significant'' and therefore subject to Office of Management and Budget (OMB) review and to the requirements of the Executive Order. The Order defines a ''significant regulatory action'' as one that is likely to result in a rule that may:

(1) Have an annual effect on the economy of $100 million or more or adversely affect in a material way the economy, a sector of the economy,

[171] *See* 49 CFR 553.21.

[172] Optical character recognition (OCR) is the process of converting an image of text, such as a scanned paper document or electronic fax file, into computer-editable text.

[173] *See* 49 CFR part 512.

productivity, competition, jobs, the environment, public health or safety, or State, local or Tribal governments or communities;

(2) Create a serious inconsistency or otherwise interfere with an action taken or planned by another agency;

(3) Materially alter the budgetary impact of entitlements, grants, user fees, or loan programs or the rights and obligations of recipients thereof; or

(4) Raise novel legal or policy issues arising out of legal mandates, the President's priorities, or the principles set forth in the Executive Order.

We have considered the impact of this rulemaking action under Executive Order 12866 and the Department of Transportation's regulatory policies and procedures. The annual effect on the economy of this rulemaking depends on consumer and manufacturer responses to the program. However, this rulemaking is significant due to public interest in the issues. Therefore, this document was reviewed by the Office of Management and Budget under E.O. 12866, ''Regulatory Planning and Review.''

This document would amend 49 CFR part 575 by adding a new section for requirements pursuant to the National Tire Fuel Efficiency Consumer Information Program. The agency has prepared a Preliminary Regulatory Impact Analysis (PRIA) and placed it in the docket and on the agency's Web site. There are two sets of costs involved: Costs to set up the information program and provide consumer information and costs to improve the rolling resistance of tires. Program costs are estimated to be about $9.1 million per year. Costs per tire are estimated to range from $2 to $4 per tire and average around $3 per tire. If 10 percent of the target tire population (15 million tires) decreased their rolling resistance, the annual cost would be $45 million. Assuming 10 percent of tires improve their rolling resistance, the combined annual cost of the program would be $54.1 million. For a further explanation of the estimated costs, *see* the PRIA provided in the docket for this proposal.

B. National Environmental Policy Act

We have reviewed this proposal for the purposes of the National Environmental Policy Act and determined that it would not have a significant impact on the quality of the human environment.

C. Regulatory Flexibility Act

Pursuant to the Regulatory Flexibility Act (5 U.S.C. 601 *et seq.,* as amended by the Small Business Regulatory Enforcement Fairness Act (SBREFA) of 1996), whenever an agency is required to publish a notice of rulemaking for any proposed or final rule, it must prepare and make available for public comment a regulatory flexibility analysis that describes the effect of the rule on small entities (*i.e.,* small businesses, small organizations, and small governmental jurisdictions). The Small Business Administration's regulations at 13 CFR part 121 define a small business, in part, as a business entity ''which operates primarily within the United States.'' 13 CFR 121.105(a). No regulatory flexibility analysis is required if the head of an agency certifies the rule will not have a significant economic impact on a substantial number of small entities.

In compliance with the Regulatory Flexibility Act NHTSA has evaluated the effects of this proposed rule on small entities. The head of the agency has certified that the proposed rule would not have a significant economic impact on a substantial number of small entities. The following is NHTSA's statement providing the factual basis for the certification (5 U.S.C. 605(b)). Tire manufacturers are not small entities. Out of the 60,000 entities that sell tires, there are a substantial number of tire dealers/retailers that are small entities. However, the only part of the proposal with potential cost implications for tire dealers/retailers is that those with display rooms must display the program poster which NHTSA will provide. We do not believe that this will result in a significant economic impact on tire dealers/retailers.

D. Executive Order 13132 (Federalism)

NHTSA has examined today's proposed rule pursuant to Executive Order 13132 (64 FR 43255, August 10, 1999). Executive Order 13132 requires agencies to determine the federalism implications of a proposed rule.

The agency refers readers to section II.B.7 above, ''Application with State and local laws and regulations.'' As noted there, given the ambiguity of the statutory language regarding preemption, the agency is sending a copy of this NPRM directly to the State of California, the National Governor's Association, the National Conference of State Legislatures, the Council of State Governments, and the National Association of Attorneys General. As also noted there, NHTSA has already generally consulted with counsel for the California Energy Commission regarding various aspects of this agency's analysis of that language.

E. Executive Order 12988 (Civil Justice Reform)

Pursuant to Executive Order 12988, ''Civil Justice Reform,'' [174] NHTSA has considered whether this rulemaking would have any retroactive effect. This proposed rule does not have any retroactive effect.

F. Unfunded Mandates Reform Act

Section 202 of the Unfunded Mandates Reform Act of 1995 (UMRA) requires Federal agencies to prepare a written assessment of the costs, benefits, and other effects of a proposed or final rule that includes a Federal mandate likely to result in the expenditure by State, local, or Tribal governments, in the aggregate, or by the private sector, of more than $100 million in any one year (adjusted for inflation with base year of 1995). Adjusting this amount by the implicit gross domestic product price deflator for 2007 results in $130 million (119.816/92.106 = 1.30).

Before promulgating a rule for which a written statement is needed, section 205 of the UMRA generally requires NHTSA to identify and consider a reasonable number of regulatory alternatives and adopt the least costly, most cost-effective, or least burdensome alternative that achieves the objectives of the rule. The provisions of section 205 do not apply when they are inconsistent with applicable law. Moreover, section 205 allows NHTSA to adopt an alternative other than the least costly, most cost-effective, or least burdensome alternative if the agency publishes with the final rule an explanation why that alternative was not adopted.

This proposed rule will not result in the expenditure by State, local, or tribal governments, in the aggregate, of more than $130 million annually, and will not result in the expenditure of that magnitude by tire manufacturers and/or tire retailers. In promulgating this proposal, NHTSA considered a variety of alternative tire fuel efficiency rating systems and information dissemination requirement options. NHTSA is statutorily required to establish a national tire fuel efficiency rating program for the purpose of educating consumers about the effect of tires on fuel efficiency, safety and durability. NHTSA tentatively concludes that the proposed requirements are cost-effective and the least burdensome way to fulfill the statutory requirements of the program.

[174] 61 FR 4729 (Feb. 7, 1996).

G. Paperwork Reduction Act

Under the procedures established by the Paperwork Reduction Act of 1995 (PRA), a person is not required to respond to a collection of information by a Federal agency unless the collection displays a valid OMB control number. The proposed rule would require manufacturers of tires to provide data on tires to NHTSA and to attach labels to replacement tires.

In compliance with the PRA, we announce that NHTSA is seeking comment on a new information collection.

Agency: National Highway Traffic Safety Administration (NHTSA).

Title: 49 CFR part 575; Tire Fuel Efficiency.

OMB Control Number: Not assigned.

Form Number: The collection of this information uses no standard form.

Requested Expiration Date of Approval: Three years from the date of approval.

Summary of the Collection of Information

NHTSA is proposing a new requirement in Part 575 which would require tire manufacturers and tire brand name owners to rate all replacement passenger car tires for fuel efficiency (*i.e.,* rolling resistance), safety (*i.e.,* wet traction), and durability (*i.e.,* treadwear), and submit reports to NHTSA regarding the test values on which these ratings are based. The ratings for safety and durability are based on test procedures specified under the UTQGS traction and treadwear ratings requirements. This information would be used by consumers of replacement passenger car tires to compare tire fuel efficiency across different tires and examine any trade offs between fuel efficiency (*i.e.,* rolling resistance), safety (*i.e.,* wet traction), and durability (*i.e.,* treadwear) in making their purchase decisions.

The information would be provided in a couple different ways: (1) A paper label of specified format affixed to the tread face of the new tire; and (2) tire manufacturers would provide data to NHTSA under a reporting requirement. Tire retailers would inform consumers of the fuel efficiency rating system by displaying a poster that NHTSA would print and distribute. NHTSA would make the ratings data available to the public both in printed form and via the Internet.

Estimated Annual Burden

The label that NHTSA is proposing to require is already covered by an existing information collection (OMB Control Number 2127–0519). The agency estimates that the incremental cost of the additional information required on the label manufacturers already affix to the tire would be $.05 cents per label. Based on an estimate of 191 million replacement tires sold annually that are affected by this proposal, the cost of the label would be $9.55 million.

The next source of burden to manufacturers is the reporting costs. NHTSA estimates that there are 28 tire manufacturers that will be required to report. Each of these will need to set up the software in a computer program to combine the testing information, organize it for NHTSA's use, *etc.* We estimate this cost to be a one-time charge of about $10,000 per company. Based on the costs used in the Early Warning Reporting Regulation analysis,[175] we estimate the annual cost per report per tire manufacturer to be $287. There are also computer maintenance costs of keeping the data up to date, *etc.*, as tests come in throughout the year. In the EWR analysis, we estimated costs of $3,755 per year per company. Thus, the total annual cost is estimated to be $4,042 per company. Thus the total costs would be $280,000 + $113,176 = $393,176 for the first year and $113,176 as an annual cost for the 28 tire manufacturers.

The largest portion of the cost burden imposed by the tire fuel efficiency program arises from the testing necessary to determine the ratings that should be assigned to the tires. Two of the proposed tests are already covered by an existing information collection (OMB Control Number 2127–0519). The agency estimates that, at least initially, there are 20,708 tires that would need to be tested to provide information for the third rating. At a cost of approximately $180 per test, if each one of these were tested once for tire rolling resistance, the costs to the industry would be $3,727,000. After the first few years of this program, the number of tires manufacturers will need to test annually will probably decrease. Based upon the average number of reports the agency receives under the UTQGS program, the agency estimates that 125 new/redesigned tires will need to be tested annually, for ongoing testing costs of $22,500.

Estimated Annual Burden to the Government

The estimated annual cost to the Federal Government is $1.28 million. This cost includes $730,000 for enforcement testing, and about $550,000 annually to set up and keep up to date a Web site that includes the information reported to NHTSA.

Number of Respondents

There are approximately 28 manufacturers of replacement tires sold in the United States.

Comments Are Invited On

Whether the proposed collection of information is necessary for the proper performance of the functions of the Department, including whether the information will have practical utility; the accuracy of the Department's estimate of the burden of the proposed information collection; ways to enhance the quality, utility and clarity of the information to be collected; and ways to minimize the burden of the collection of information on respondents, including the use of automated collection techniques or other forms of information technology. Please submit any comments to the NHTSA Docket Number referenced in the heading of this document, and to Mary Versailles as referenced in the **FOR FURTHER INFORMATION CONTACT** section of this document. Comments are due by August 21, 2009.

H. Executive Order 13045

Executive Order 13045 [176] applies to any rule that: (1) Is determined to be economically significant as defined under E.O. 12866, and (2) concerns an environmental, health or safety risk that NHTSA has reason to believe may have a disproportionate effect on children. If the regulatory action meets both criteria, we must evaluate the environmental health or safety effects of the proposed rule on children, and explain why the proposed regulation is preferable to other potentially effective and reasonably feasible alternatives considered by us.

This proposed rule does not pose such a risk for children. The primary effects of this proposal are to conserve energy by educating consumers to make better informed tire purchasing decisions.

I. National Technology Transfer and Advancement Act

Section 12(d) of the National Technology Transfer and Advancement Act (NTTAA) requires NHTSA to evaluate and use existing voluntary consensus standards in its regulatory activities unless doing so would be inconsistent with applicable law (*e.g.,*

[175] Preliminary Regulatory Evaluation, Tread Act Amendments to Early Warning Reporting Regulation Part 579 and Defect and Noncompliance Part 573, August 2008 (Docket No. 2008–0169–0007.1).

[176] 62 FR 19885 (Apr. 23, 1997).

the statutory provisions regarding NHTSA's vehicle safety authority) or otherwise impractical.

Voluntary consensus standards are technical standards developed or adopted by voluntary consensus standards bodies. Technical standards are defined by the NTTAA as ''performance-based or design-specific technical specification and related management systems practices.'' They pertain to ''products and processes, such as size, strength, or technical performance of a product, process or material.''

Examples of organizations generally regarded as voluntary consensus standards bodies include the American Society for Testing and Materials (ASTM), the Society of Automotive Engineers (SAE), and the American National Standards Institute (ANSI). If NHTSA does not use available and potentially applicable voluntary consensus standards, we are required by the Act to provide Congress, through OMB, an explanation of the reasons for not using such standards.

The notice proposes a national tire fuel efficiency rating system for replacement passenger car tires to assist consumers in making more educated tire purchasing decisions. For purposes of the fuel efficiency rating determination, NHTSA proposed to base the rating determination on a rolling resistance test method nearly finalized by ISO, ISO 28580: *Tyre Rolling Resistance measurement method—Single point test and measurement result correlation—Designed to facilitate international cooperation and, possibly, regulation building.* The ISO is a worldwide federation of national standards bodies that prepares standards through technical committees comprised of international organizations, governmental and non-governmental, in liaison with ISO.[177] Standards developed by ISO are voluntary consensus standards.

J. Executive Order 13211

Executive Order 13211 [178] applies to any rule that: (1) Is determined to be economically significant as defined under E.O. 12866, and is likely to have a significant adverse effect on the supply, distribution, or use of energy; or (2) that is designated by the Administrator of the Office of Information and Regulatory Affairs as a significant energy action. If the regulatory action meets either criterion, we must evaluate the adverse energy effects of the proposed rule and explain why the proposed regulation is preferable to other potentially effective and reasonably feasible alternatives considered by NHTSA.

The proposed rule seeks to establish a national tire fuel efficiency rating program for the purpose of educating consumers about the effect of tires on fuel efficiency, safety and durability, which if successful, will likely reduce the rolling resistance of replacement passenger car tires and, thus, reduce the consumption of petroleum. Therefore, this proposed rule will not have any adverse energy effects. Accordingly, this proposed rulemaking action is not designated as a significant energy action.

K. Regulation Identifier Number (RIN)

The Department of Transportation assigns a regulation identifier number (RIN) to each regulatory action listed in the Unified Agenda of Federal Regulations. The Regulatory Information Service Center publishes the Unified Agenda in April and October of each year. You may use the RIN contained in the heading at the beginning of this document to find this action in the Unified Agenda.

L. Plain Language

Executive Order 12866 requires each agency to write all rules in plain language. Application of the principles of plain language includes consideration of the following questions:

- Have we organized the material to suit the public's needs?
- Are the requirements in the rule clearly stated?
- Does the rule contain technical language or jargon that isn't clear?
- Would a different format (grouping and order of sections, use of headings, paragraphing) make the rule easier to understand?
- Would more (but shorter) sections be better?
- Could we improve clarity by adding tables, lists, or diagrams?
- What else could we do to make the rule easier to understand?

If you have any responses to these questions, please include them in your comments on this proposal.

M. Privacy Act

Anyone is able to search the electronic form of all comments received into any of our dockets by the name of the individual submitting the comment (or signing the comment, if submitted on behalf of an organization, business, labor union, *etc.*). You may review DOT's complete Privacy Act statement in the **Federal Register** published on April 11, 2000 (Volume 65, Number 70; Pages 19477–78) or you may visit *http://www.dot.gov/privacy.html*.

List of Subjects in 49 CFR Part 575

Consumer protection, Motor vehicle safety, Reporting and recordkeeping requirements, Tires.

In consideration of the foregoing, NHTSA proposes to amend 49 CFR Part 575 as follows:

PART 575—CONSUMER INFORMATION

1. Revise the authority citation for Part 575 to read as follows:

Authority: 49 U.S.C. 32302, 32304A, 30111, 30115, 30117, 30123, 30166, and 30168, Pub. L. 104–414, 114 Stat. 1800, Pub. L. 109–59, 119 Stat. 1144, Pub. L. 110–140, 121 Stat. 1492, 15 U.S.C. 1232(g); delegation of authority at 49 CFR 1.50.

2. Add § 575.106 to subpart B to read as follows:

§ 575.106 Tire fuel efficiency consumer information program.

(a) *Scope.* This section requires tire manufacturers, tire brand name owners, and tire retailers to provide information indicating the relative performance of replacement passenger car tires in the areas of fuel efficiency, safety, and durability.

(b) *Purpose.* The purpose of this section is to aid consumers in making better educated choices in the purchase of passenger car tires.

(c) *Application.* This section applies to replacement passenger car tires. However, this section does not apply to deep tread, winter-type snow tires, space-saver or temporary use spare tires, tires with nominal rim diameters of 12 inches or less, or to limited production tires as defined in § 575.104(c)(2).

(d) *Definitions.* As used in this section:

Passenger car tire means a tire intended for use on passenger cars, multipurpose passenger vehicles, and trucks, that have a gross vehicle weight rating (GVWR) of 10,000 pounds or less.

Ratings graphic means a graphical depiction of a tire's fuel efficiency, safety, and durability ratings information, as reported to NHTSA under paragraph (e)(1)(i)(C) of this section, that conforms in content, format and sequence to the sample label depicted in Figure 1 of this section.

Replacement passenger car tire means any passenger car tire other than a passenger car tire sold as original equipment on a new vehicle.

Size designation means the alpha-numeric designation assigned by a

[177] ISO Central Secretariat, 1, ch. de la Voie-Creuse, Case postale 56, CH–1211 Geneva 20, Switzerland, Telephone +41 22 749 01 11, Fax +41 22 733 34 30, *http://www.iso.org.*

[178] 66 FR 28355 (May 18, 2001).

manufacturer that identifies a tire's size. This can include identifications of tire class, nominal width, aspect ratio, tire construction, and wheel diameter.

Tire line or *tire model* means the entire name used by a tire manufacturer to designate a tire product including all prefixes and suffixes as they appear on the sidewall of a tire.

Tire retailer means a person or business that offers a tire for sale and with whom a replacement passenger car tire manufacturer or brand name owner has a contractual, proprietary, or other legal relationship, or a person or business who has such a relationship with a distributor of the replacement passenger car tire manufacturer or brand name owner concerning the tire in question.

(e) *Requirements.*—(1) *Information.* (i) *Requirements for tire manufacturers.* Each manufacturer of tires, or in the case of tires marketed under a brand name, each brand name owner, shall provide rating information for each tire of which it is the manufacturer or brand name owner in the manner set forth in paragraphs (e)(1)(i)(A) through (D) of this section. The ratings for each tire shall be only those specified in paragraph (e)(2) of this section. For the purposes of this section, each tire of a different size designation is to be rated separately. Each tire shall be able to achieve the level of performance represented by each rating with which it is labeled. An individual tire need not, however, meet further requirements after having been subjected to the test for any one rating.

(A) *Ratings.* Each tire shall be rated with the words, letters, symbols, and figures specified in paragraph (e)(2) of this section. Each shall display this rating information using the ratings graphic illustrated in Figure 1 on either the tire label required by § 575.104(d)(1)(i)(B), or on a separate tire label, as set forth in paragraph (e)(1)(i)(B) of this section.

(B) *Tire label.* Each tire manufactured on or after the effective date of these amendments shall have affixed to its tread surface so as not to be easily removable a label containing its ratings graphic, as illustrated in Figure 1. The label shall be no less than 4.5 inches high and 5.5 inches wide. The fuel efficiency, safety and durability ratings attributed to the tire shall be either imprinted or indelibly stamped on the ratings graphic on the label in the appropriate location along each scale, as described in this paragraph (e)(1)(i)(B). For purposes of the ratings graphic required by this section, the fuel efficiency, safety and durability ratings, each an integer ranging from 0 to 100, shall appear in a white box superimposed upon the color shaded rating scale, and directly above the arrow which shall be located in the location that corresponds to where the respective rating falls, where each shaded box represents an increment of 5 on each rating scale. Namely, since the ratings graphic has 20 boxes for each rating scale, the first box would contain the arrow pointing to the white box containing the score if a tire is rated 1 through 4. An arrow indicating a rating of 5 would appear directly on the rightmost edge of the leftmost color shaded, *i.e.,* reddest, box. The 20th, or rightmost, box would contain the arrow pointing to the white box containing the rating if a tire is rated 96 through 99. An arrow indicating a rating of 95 would appear directly on the leftmost edge of the rightmost color shaded, *i.e.,* greenest, box. An arrow indicating a rating of 100 would appear directly on the rightmost edge of the rightmost color shaded, *i.e.,* greenest, box.

(*1*) *Ratings graphic text.* The text ''FUEL EFFICIENCY and GREENHOUSE GAS RATING,'' ''SAFETY RATING (WET TRACTION),'' and ''DURABILITY RATING (TREADWEAR),'' and ''For more information visit www.nhtsa.gov,'' must have a minimum font size of 12 point. The remaining text in the header area of the ratings graphic (*i.e.,* ''GOVERNMENT TIRE RATING,'' tire manufacturer or brand name owner specification, tire line specification, tire size specification), and the 0 to 100 number rating on each rating scale, must have a minimum font size of 14 point. All remaining text and numbers on the label must have a minimum font size of 10 point.

(*2*) *Ratings graphic color.* The text and numbers of the ratings graphic shall be dark in color, with a background that is light in color. The three scales on the ratings graphic shall be presented in color, where the first of 20 squares (*i.e.,* the leftmost square on each scale) shall be primary red, the 2nd of 20 squares shall be a slightly lighter shade of red than the leftmost (*i.e.,* 1st) square, the 3rd square shall be a slightly lighter shade of red than the 2nd square, and so on until the 10th of 20 squares, which should be nearly white. The last of 20 squares (*i.e.,* the rightmost square) shall be primary green, the 19th square shall be a slightly lighter shade of green than the 20th square, the 18th square shall be a shade of green slightly lighter than the 19th square, and so on until the 10th of 20 squares, which should be nearly white. Sample ratings graphics that depict the appropriate color schemes are available at *http://www.nhtsa.gov.*

(*3*) *Ratings graphic orientation.* The ratings graphic of Figure 1 shall be oriented on the tire tread surface with lines of type running perpendicular to the tread circumference. If a label bearing a tire size designation is attached to the tire tread surface and the tire size designation is oriented with lines of type running perpendicular to the tread circumference, the ratings graphic of Figure 1 shall read in the same direction as the tire size designation.

(*4*) *New ratings information.* Whenever the tire manufacturer, or in the case of tires marketed under a brand name the brand name owner, determines new or different fuel efficiency, safety, or durability ratings information for a tire, the tire manufacturer or brand name owner shall include the new ratings information on and with tires manufactured on or after the date 30 calendar days after receipt by the manufacturer of the new information.

(C) *Reporting requirements.* The information collection requirements contained in this section have been approved by the Office of Management and Budget under the provisions of the Paperwork Reduction Act (44 U.S.C. 3501 *et seq.*) and have been assigned OMB Control Number XXXX–XXXX.

(*1*) Manufacturers of tires, or in the case of tires marketed under a brand name, brand name owners of tires subject to this section shall submit to NHTSA electronically, either directly or through an agent, the following data for each rated replacement passenger car tire by one year after the effective date of these regulations:

(*i*) Rolling resistance force, in Newtons and must be followed in parenthesis by the equivalent pounds-force, *e.g.,* 5 Newtons (1.12 lbf)., as measured in paragraph (f) of this section.

(*ii*) Test load, in Newtons and must be followed in parenthesis by the equivalent pounds-force, *e.g.,* 5 Newtons (1.12 lbf), as measured in paragraph (f) of this section.

(*iii*) Rolling resistance rating (0 to 100), as determined in paragraph (e)(2)(i) of this section.

(*iv*) Traction rating (0 to 100), as determined in paragraph (e)(2)(ii) of this section.

(*v*) Treadwear rating (0 to 100), as determined in paragraph (e)(2)(iii) of this section.

(*vi*) Average peak coefficient of friction for asphalt, as measured in § 575.104(f).

(*vii*) Average peak coefficient of friction for concrete, as measured in § 575.104(f).

(*viii*) Adjusted peak coefficient of friction for asphalt (μ_{APA}), based on the formula in paragraph (e)(2)(ii) of this section.

(*ix*) Adjusted peak coefficient of friction for concrete (μ_{APC}), based on the formula in paragraph (e)(2)(ii) of this section.

(*x*) Wear rate of tested tire, as measured during the UTQGS treadwear procedure (49 CFR 575.104(e)).

(*2*) *Format of data submitted.* The information required under paragraph (e)(1)(i)(C)(*1*) of this section shall be submitted to NHTSA in electronic format.

(*3*) *New ratings information.* Whenever the tire manufacturer, or in the case of tires marketed under a brand name, the brand name owner determines new or different information required under paragraph (e)(1)(i)(C)(*1*) of this section for a tire, the tire manufacturer or brand name owner shall submit the new ratings information to NHTSA on or before the date 30 calendar days after receipt by the manufacturer of the new information.

(ii) *Requirements for tire retailers.* Each tire retailer shall provide rating information for each passenger car tire offered for sale in the manner set forth in paragraphs (e)(1)(ii)(A) and (B) of this section.

(A) A tire retailer shall not remove the label containing the ratings graphic required by paragraph (e)(1)(i)(B) of this section, until the tire has been sold.

(B) A tire retailer that has a display room, or that displays sample tires for sale to consumers, shall display a tire fuel efficiency consumer information program poster that NHTSA shall print and provide to tire retailers.

(iii) *Linking to NHTSA's tire Web site.* Tire manufacturers and tire retailers that have or maintain Web sites must link to NHTSA's tire Web site (*http://www.nhtsa.gov*) from their main (top) Web page no later than 12 months after this regulation is effective or the day the Web site is online and available to the public.

(2) *Performance.*—(i) *Fuel efficiency.* Each tire shall be rated for fuel efficiency performance on a scale of 0 to 100, as calculated using the following formula, where RRF is the NHTSA nominal rolling resistance force value obtained when the tire is tested in accordance with the conditions and procedures specified in paragraph (f) of this section. A fuel efficiency rating (R_{FE}) shall be expressed as an integer 0 to 100 (for example, 51, 64, 80) by rounding R_{FE} to the nearest whole number. The maximum rating that may be assigned to the candidate tire is R_{FE}, as calculated using this formula.

$$R_{FE} = (RRF_{max} - RRF) * 100/(RRF_{max} - RRF_{min})$$

Where RRF_{max} is equal to 25 and represents the highest rolling resistance the agency believes should be represented on the fuel efficiency rating scale and where RRF_{min} is equal to 5 and represents the lowest rolling resistance the agency believes should be represented on the fuel efficiency rating scale.

(ii) *Traction.* Each tire shall be rated for traction performance on a scale of 0 to 100, as calculated using the following formula, where μ_{APA} and μ_{APC} are the nominal peak coefficient of friction values obtained when the tire is tested in accordance with the conditions and procedures specified in paragraph (g) of this section. A traction rating (R_{TC}) shall be expressed as an integer between 0 and 100 (for example, 51, 64, 80) by rounding R_{TC} to the nearest whole number. The maximum rating that may be assigned to the candidate tire is R_{TC}, as calculated using this formula.

$$R_{TC} = \{(\mu_{APA} + \mu_{APC})\ \{1 - [(\mu_{APA} - \mu_{APC})/(\mu_{APA} + \mu_{APC})]^2\} - 0.6\} * (100/2.0)$$

Where:

μ_{APA} = adjusted peak coefficient of friction for asphalt, and

μ_{APC} = adjusted peak coefficient of friction for concrete

(iii) *Treadwear.* Each tire shall be rated for treadwear performance on a scale of 0 to 100, as calculated using the following formula, where TW_{UTQGS} is the traction grading as specified in § 575.104(d)(2)(i). A traction rating (R_{TW}) shall be expressed as an integer between 0 and 100 (for example, 51, 64, 80) by rounding R_{TW} to the nearest whole number. The maximum rating that may be assigned to the candidate tire is R_{TW}, as calculated using this formula.

$$R_{TW} = TW_{UTQGS}/10$$

(f) *Fuel efficiency rating conditions and procedures.*—(1) *Conditions.* (i) Measurement of rolling resistance force under the test procedure specified in paragraph (f)(2) of this section shall be made using either the force or the torque method.

(ii) The test procedure specified in paragraph (f)(2) of this section shall be carried out on an 80-grit roadwheel surface.

(2) *Procedure.* The test procedure shall be as specified in International Organization for Standardization (ISO), ISO 28580: *Tyre Rolling Resistance measurement method—Single point test and measurement result correlation—Designed to facilitate international cooperation and, possibly, regulation building,* except that the conditions specified in paragraph (f)(1) of this section shall be used.

(g) *Traction rating conditions and procedures.* (1) *Conditions.* Test conditions are as specified in § 575.104(f)(1).

(2) *Procedure.* (i) Prepare two standard tires as specified in § 575.104(f)(2)(i).

(ii) Mount the tires on the test apparatus described in § 575.104(f)(1)(iv) and load each tire to 1,085 pounds.

(iii) Tow the trailer on the asphalt test surface specified in § 575.104(f)(1)(i) at a speed of 40 mph, lock one trailer wheel, and record the peak coefficient of friction on the tire associated with that wheel. Peak coefficient shall be measured between 0.35 and 0.65 seconds after initiation of braking sequence.

(iv) Repeat the test on the concrete surface, locking the same wheel.

(v) Repeat the tests specified in paragraphs (g)(2)(iii) and (iv) of this section for a total of 10 measurements on each test surface.

(vi) Repeat the procedures specified in paragraphs (g)(2)(iii) through (v) of this section, locking the wheel associated with the other standard tire.

(vii) Average the 20 measurements taken on the asphalt surface to find the standard tire average peak coefficient of friction for the asphalt surface. Average the 20 measurements taken on the concrete surface to find the standard tire average peak coefficient of friction for the concrete surface. The standard tire average peak coefficient of friction so determined may be used in the computation of adjusted peak coefficient of friction coefficients for more than one candidate tire.

(viii) Prepare two candidate tires of the same construction type, manufacturer, tire line, and size designation in accordance with paragraph (g)(2)(i) of this section, mount them on the test apparatus, and test one of them according to the procedures of paragraphs (g)(2)(ii) through (v) of this section, except load each tire to 85% of the test load specified in § 575.104(h). For CT tires, the test inflation of candidate tires shall be 230 kPa. Candidate tire measurements may be taken either before or after the standard tire measurements used to compute the standard tire traction coefficient. Take all standard tire and candidate tire measurements used in computation of a candidate tire's adjusted peak coefficient of friction within a single three hour period. Average the 10 measurements taken on the asphalt

surface to find the candidate tire average peak coefficient of friction for the asphalt surface. Average the 10 measurements taken on the concrete surface to find the candidate tire average peak coefficient of friction for the concrete surface.

(ix) Repeat the procedures specified in paragraph (g)(2)(viii) of this section, using the second candidate tire as the tire being tested.

(x) Compute each candidate tire's adjusted peak coefficient of friction for asphalt (μ_{APA}) by the following formula:

μ_{APA} = (Measured Candidate Tire Average Peak Coefficient of Friction for Asphalt + 0.75) – (Measured Standard Tire Average Peak Coefficient of Friction for Asphalt)

(xi) Compute each candidate tire's adjusted peak coefficient of friction for concrete (μ_{APC}) by the following formula:

μ_{APC} = (Measured Candidate Tire Average Peak Coefficient of Friction for Concrete + 0.60) – (Measured Standard Tire Average Peak Coefficient of Friction for Concrete)

(h) *Treadwear rating conditions and procedures.*—(1) *Conditions.* Test conditions are as specified in § 575.104(e)(1).

(2) *Procedure.* Test procedure is as specified in § 575.104(e)(2).

Tables and Figures to § 575.106

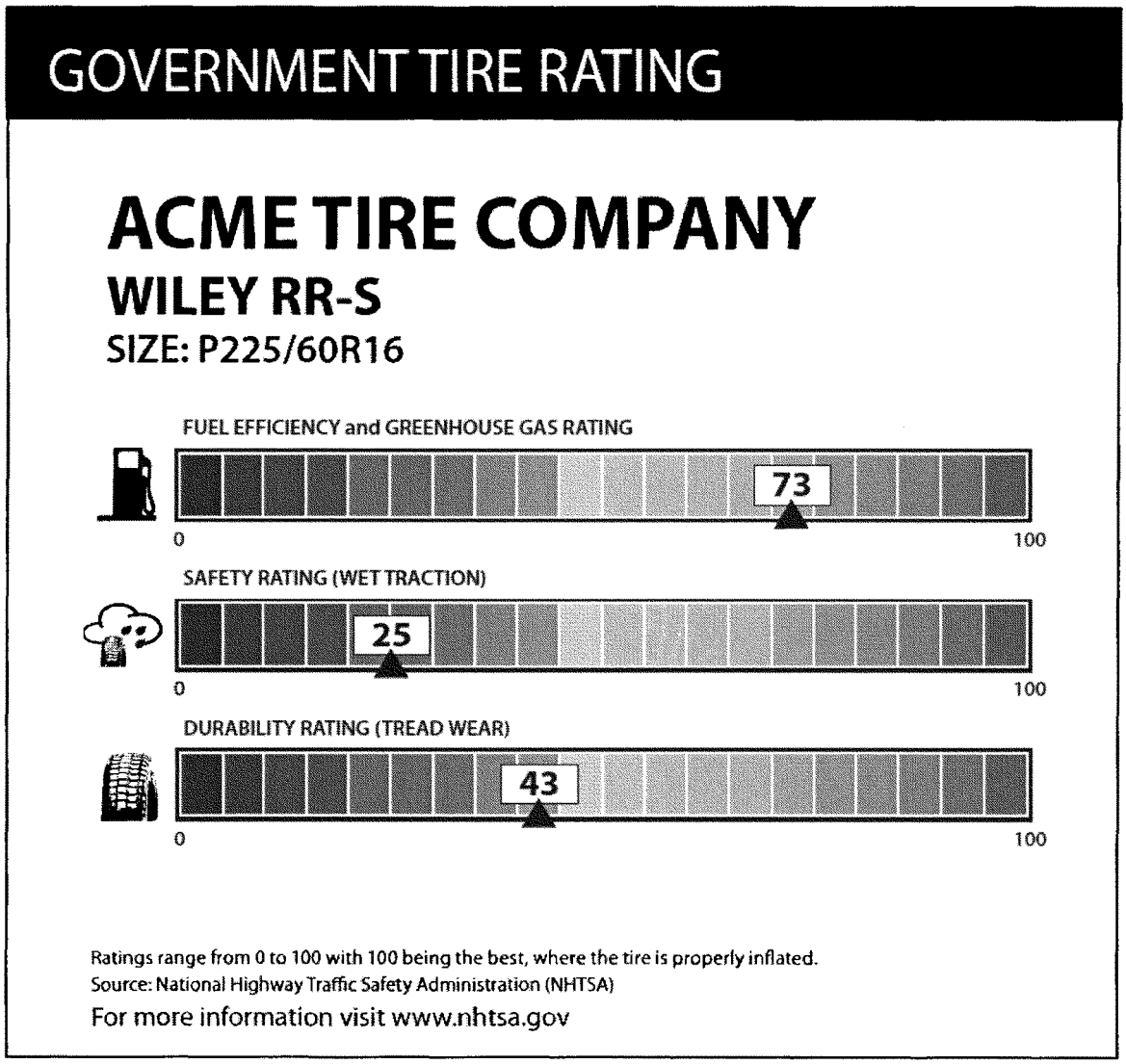

Figure 1 – Proposed Rating System Label

Issued on: June 16, 2009.

Stephen R. Kratzke,

Associate Administrator for Rulemaking.

[FR Doc. E9–14496 Filed 6–18–09; 11:15 am]

BILLING CODE P

Reader Aids

Federal Register

Vol. 74, No. 118

Monday, June 22, 2009

CUSTOMER SERVICE AND INFORMATION

Federal Register/Code of Federal Regulations	
General Information, indexes and other finding aids	**202–741–6000**
Laws	**741–6000**
Presidential Documents	
Executive orders and proclamations	**741–6000**
The United States Government Manual	**741–6000**
Other Services	
Electronic and on-line services (voice)	**741–6020**
Privacy Act Compilation	**741–6064**
Public Laws Update Service (numbers, dates, etc.)	**741–6043**
TTY for the deaf-and-hard-of-hearing	**741–6086**

ELECTRONIC RESEARCH

World Wide Web

Full text of the daily Federal Register, CFR and other publications is located at: **http://www.gpoaccess.gov/nara/index.html**

Federal Register information and research tools, including Public Inspection List, indexes, and links to GPO Access are located at: **http://www.archives.gov/federal__register**

E-mail

FEDREGTOC-L (Federal Register Table of Contents LISTSERV) is an open e-mail service that provides subscribers with a digital form of the Federal Register Table of Contents. The digital form of the Federal Register Table of Contents includes HTML and PDF links to the full text of each document.

To join or leave, go to **http://listserv.access.gpo.gov** and select *Online mailing list archives, FEDREGTOC-L, Join or leave the list (or change settings);* then follow the instructions.

PENS (Public Law Electronic Notification Service) is an e-mail service that notifies subscribers of recently enacted laws.

To subscribe, go to **http://listserv.gsa.gov/archives/publaws-l.html** and select *Join or leave the list (or change settings);* then follow the instructions.

FEDREGTOC-L and **PENS** are mailing lists only. We cannot respond to specific inquiries.

Reference questions. Send questions and comments about the Federal Register system to: **fedreg.info@nara.gov**

The Federal Register staff cannot interpret specific documents or regulations.

Reminders. Effective January 1, 2009, the Reminders, including Rules Going Into Effect and Comments Due Next Week, no longer appear in the Reader Aids section of the Federal Register. This information can be found online at **http://www.regulations.gov.**

CFR Checklist. Effective January 1, 2009, the CFR Checklist no longer appears in the Federal Register. This information can be found online at **http://bookstore.gpo.gov/.**

FEDERAL REGISTER PAGES AND DATE, JUNE

26077–26280 1
26281–26510 2
26511–26770 3
26771–26932 4
26933–27070 5
27071–27242 8
27243–27422 9
27423–27678 10
27679–27902 11
27903–28148 12
28149–28438 15
28439–28590 16
28591–28862 17
28863–29110 18
29111–29392 19
29393–29588 22

CFR PARTS AFFECTED DURING JUNE

At the end of each month, the Office of the Federal Register publishes separately a List of CFR Sections Affected (LSA), which lists parts and sections affected by documents published since the revision date of each title.

2 CFR

1 28149
182 28149

3 CFR

Proclamations:
8387 26929
8387 (Correction) 27677
8388 26931
8389 27067
8390 27069
8391 28593
8392 28595

Administrative Orders:
Memorandums:
Memo. of May 27, 2009 26277
Memo. of June 12, 2009 28591
Memo. of June 8, 2009 28863
Memo. of June 17, 2009 29393
Notices:
Notice of June 12, 2009 28437
Notice of June 18, 2009 29391
Presidential Determinations:
No. 2009-19 of June 5, 2009 27903
No. 2009-20 of June 12, 2009 28865
No. 2009-21 of June 12, 2009 28867

5 CFR

532 28597
1600 29111

Proposed Rules:
894 26302

7 CFR

28 26771
220 28154
301 ..... 26774, 27071, 27423
319 26511
457 ..... 26281, 28154
916 28869
917 28869
981 28872
1467 26281

Proposed Rules:
205 26591
319 27456
352 27456
360 27456
361 27456
920 26806
1205 26810
1209 26984
1220 27467

8 CFR

1 26933
100 26933
103 26933
204 26933
207 26933
208 26933
211 26933
212 26933
214 ..... 26514, 26933
216 26933
236 26933
244 26933
245 26933
248 26933
264 26933
274a 26514, 26933
301 26933
316 26933
320 26933
322 26933
324 26933
327 26933
328 26933
329 26933
330 26933
334 26933
392 26933

10 CFR

50 28112
52 28112
72 ..... 26285, 27423
170 27642
171 27642

Proposed Rules:
50 ..... 26303, 27724
52 27724
70 26814
72 ..... 26310, 27469
430 26816
431 26596
440 27945

11 CFR

9430 27905

12 CFR

225 ..... 26077, 26081
229 26515
337 ..... 26516, 27679, 27683
370 ..... 26521, 26941
619 28597
620 28597
621 28597
1410 28156

Proposed Rules:
34 27386
208 27386
365 27386
563 27386

610 27386
617 29143
761 27386
1212 27470
1230 26989
1233 28636
1731 28636
1770 26989

13 CFR

120 ....27243, 27426

14 CFR

23 26777
25 ....26946, 26948
34 26778
36 27076
39 ....26288, 26291, 27684, 27686, 27689, 27691, 27693, 27695, 27698, 27702, 27704, 27906, 27908, 27911, 27913, 27915, 27917, 28439, 29112, 29116, 29118, 29121, 29123, 29126
71 ....27076, 27077, 27078
95 26779
97 ....28156, 28158
Proposed Rules:
21 28449
23 26818
27 28449
39 ....26312, 26315, 26317, 26322, 26994, 27254, 27257, 27260, 27474, 27476, 27725, 27946, 29144, 29148

16 CFR

1500 27248
Proposed Rules:
321 ....26118, 26130
322 ....26118, 26130
437 29149

17 CFR

211 27427
239 26782
274 26782
Proposed Rules:
200 29024
232 29024
240 29024
249 29024
274 29024

19 CFR

101 28601
122 28601

20 CFR

Proposed Rules:
416 27727
617 27262
618 27262
665 27262
671 27262

21 CFR

510 26951
520 ....27706, 28874
522 26951
524 26782
558 27919

23 CFR

192 28441
470 28441
625 28441
634 ....28160, 28441
650 28441
655 28441
772 28441
971 28441
972 28441
973 28441
1206 28441
1208 28441
1210 28441
1215 28441

26 CFR

1 ....27079, 27080, 27868, 27920
20 ....27079, 27080
25 27080
602 27868
Proposed Rules:
1 27947
20 26597

27 CFR

9 29395
40 29401
41 29401
44 29401
45 29401
Proposed Rules:
40 29433
41 29433
44 29433
45 29433

28 CFR

0 29128
2 28602
Proposed Rules:
16 26598

29 CFR

4001 27080
4022 28161
4044 28161
4901 27080
4902 27080

30 CFR

49 28606
Proposed Rules:
74 27263
250 28639

31 CFR

30 28394
285 ....27432, 27707
356 26084
538 27433
Proposed Rules:
103 26996
285 27730

32 CFR

706 29420
Proposed Rules:
199 29435

33 CFR

1 27435
25 27435
66 27435
70 27435
72 27435
100 27435
110 27435
117 ....26087, 26293, 26294, 26295, 26296, 26952, 27249, 27442, 29422
133 27435
135 27435
136 27435
137 27435
138 27435
155 27435
157 27435
161 27435
165 ....26087, 26089, 26297, 26782, 26785, 26786, 26954, 27435, 27932, 27934, 27936, 27938, 28163, 28165, 28609, 28612, 28614, 29129, 29131, 29134, 29422, 29423, 29435, 29428
166 27435
Proposed Rules:
100 ....26138, 26326, 27478, 29436
110 ....26328, 27000, 27948
117 26820
146 29439
165 ....26138, 26823, 27481, 27953, 28199, 29151, 29447

36 CFR

223 26091
261 26091
Proposed Rules:
1253 27956

38 CFR

1 29430
3 ....26956, 26958
4 26958
9 26788
38 26092

39 CFR

20 26959
3020 26789

40 CFR

35 28443
51 26098
52 ....26098, 26099, 26103, 26525, 27442, 27708, 27711, 27714, 27716, 28444, 28447, 28616
55 28875
62 ....27444, 27718, 27720, 27722
72 27940
73 27940
74 27940
77 27940
78 27940
112 29136
180 ....26527, 26536, 26543, 27447, 28616
300 26962
Proposed Rules:
51 ....27002, 28451
52 ....26141, 26600, 27084, 27731, 27737, 27738, 27957, 27973, 28467, 29450, 29451, 29452
60 28451
61 28451
62 27444
63 ....26142, 27265, 28451
81 ....27957, 27973
93 27085
191 28468
194 28468
300 27003
799 28654

42 CFR

412 26546
Proposed Rules:
8 29153
412 26600
441 29453

44 CFR

64 ....26569, 28624
65 ....26572, 26577, 28627
67 ....28166, 28629
Proposed Rules:
67 ....26636, 26640, 28202

45 CFR

681 26793

47 CFR

73 ....26299, 26300, 26801, 26802, 27454, 27944
74 26300
90 27455
400 26965
Proposed Rules:
1 26329
64 28471
73 ....26826, 27484, 27985

48 CFR

Ch. 1 ....28426, 28434
2 26981
22 26981
25 28426
32 28430
43 28430
52 ....26981, 28426, 28430
53 28430
546 26107
552 26107
Proposed Rules:
2 26646
4 26646
12 26646
39 26646
52 26646

49 CFR

1 26981
Proposed Rules:
107 29456
387 27485
541 27493
575 29452
578 28204
581 28209

50 CFR

17 ....26488, 28776, 29344
216 26580
218 ....28328, 28349, 28370
224 29344
226 29300
622 29430
635 ....26110, 26803, 28635
648 ....26589, 27251, 27252
660 ....26983, 29431
665 27253
679 ....26804, 26805

Proposed Rules:
17 .....27004, 27266, 27271, 27588, 29456
226.....27988
229.....27739
300.....26160, 29158
622 .....26170, 26171, 26827, 26829
635.....26174
665.....29158
679.....26183, 27498

LIST OF PUBLIC LAWS

This is a continuing list of public bills from the current session of Congress which have become Federal laws. It may be used in conjunction with "P L U S" (Public Laws Update Service) on 202–741–6043. This list is also available online at *http://www.archives.gov/federal-register/laws.html*.

The text of laws is not published in the **Federal Register** but may be ordered in "slip law" (individual pamphlet) form from the Superintendent of Documents, U.S. Government Printing Office, Washington, DC 20402 (phone, 202–512–1808). The text will also be made available on the Internet from GPO Access at *http://www.gpoaccess.gov/plaws/index.html*. Some laws may not yet be available.

H.R. 131/P.L. 111–25
Ronald Reagan Centennial Commission Act (June 2, 2009; 123 Stat. 1767)

Last List May 27, 2009

Public Laws Electronic Notification Service (PENS)

PENS is a free electronic mail notification service of newly enacted public laws. To subscribe, go to *http://listserv.gsa.gov/archives/publaws-l.html*

Note: This service is strictly for E-mail notification of new laws. The text of laws is not available through this service. **PENS** cannot respond to specific inquiries sent to this address.to this address.