AUTHENTICATED
U.S. GOVERNMENT
INFORMATION
GPO

Federal Register

Tuesday,
June 23, 2009

Part III

Department of Transportation

National Highway Traffic Safety Administration

49 CFR Part 572

Anthropomorphic Test Devices; SID–IIs Side Impact Crash Test Dummy; 5th Percentile Adult Female; Final Rule

DEPARTMENT OF TRANSPORTATION

National Highway Traffic Safety Administration

49 CFR Part 572

[Docket No. NHTSA–2009–0002]

RIN 2127–AK26

Anthropomorphic Test Devices; SID–IIs Side Impact Crash Test Dummy; 5th Percentile Adult Female

AGENCY: National Highway Traffic Safety Administration (NHTSA), Department of Transportation (DOT).

ACTION: Final rule, response to petitions for reconsideration, technical amendment.

SUMMARY: This final rule responds to petitions for reconsideration of a December 14, 2006 final rule establishing a new small adult female side impact crash test dummy, called the ''SID–IIs'' test dummy. The petitions were submitted by the Alliance of Automobile Manufacturers, First Technology Safety Systems, and Denton ATD. In response to the petitions, among other things today's final rule modifies the iliac performance criteria to allow a new material formulation and design to be used for the iliac wing of the dummy's pelvis, defines a time period in which accelerations are measured in the thorax with arm and pelvis acetabulum tests, slightly modifies some of the test procedures used in the qualification tests (*e.g.,* by slightly lowering the impact speed of the impactor in two tests and by increasing the recovery time for the pelvis-iliac and pelvis-acetabulum tests), adjusts the performance corridors for the various impact tests of the dummy, and revises parts of the drawing package and the user's manual for the dummy.

DATES: This final rule is effective August 24, 2009. The incorporation by reference of certain publications listed in the regulations is approved by the Director of the Federal Register as of August 24, 2009. If you wish to petition for reconsideration of this rule, your petition must be received by August 7, 2009.

ADDRESSES: If you wish to petition for reconsideration of this rule, you should refer in your petition to the docket number of this document and submit your petition to: Administrator, National Highway Traffic Safety Administration, 1200 New Jersey Avenue, SE., Washington, DC, 20590.

The petition will be placed in the docket. Anyone is able to search the electronic form of all documents received into any docket by the name of the individual submitting the comment (or signing the comment, if submitted on behalf of an association, business, labor union, *etc.*). You may review DOT's complete Privacy Act Statement in the **Federal Register** published on April 11, 2000 (Volume 65, Number 70; Pages 19477–78).

FOR FURTHER INFORMATION CONTACT: For non-legal issues, you may call Ms. Lori Summers, NHTSA Office of Crashworthiness Standards (telephone 202–366–1740) (fax 202–493–2990). For legal issues, you may call Ms. Deirdre Fujita, NHTSA Office of Chief Counsel (telephone 202–366–2992) (fax 202–366–3820). You may send mail to these officials at the National Highway Traffic Safety Administration, 1200 New Jersey Avenue, SE., Washington, DC, 20590.

SUPPLEMENTARY INFORMATION:

Table of Contents

I. Introduction
II. Description of SID–IIs
  a. General Description
  b. Performance Characteristics
III. Petitions for Reconsideration
IV. Overview of Response to the Petitions
V. Issues Relating to the Pelvis of the Dummy
  a. Iliac Wing Material
  b. Iliac Load Cell Stand-Off Design
  c. Iliac Qualification Procedure
  1. Use of OSRP Procedure
  2. Pelvic Iliac Probe Acceleration
  3. Specification of Tape
  4. Corrections
  d. Pelvis Acetabulum Qualification Procedure
  1. Pelvic Plug Pre-Crush and Associated Variability
  2. Pelvic Plug Qualification Corridor
  3. Pelvis Acceleration Requirement
  4. Measuring Peak Pelvis Lateral Acceleration 5 ms or More After Contact
VI. Shoulder Qualification Procedures
  a. Impact Velocity
  b. Arm Position
VII. Thorax with Arm Qualification Procedures
  a. Peak Impactor Acceleration
  b. Time Zero
  c. Reported Noise in Potentiometers
VIII. Thorax Without Arm Petitioned Issues
  a. Peak Impactor Acceleration
  b. Dummy Alignment on the Test Bench
IX. Abdomen Qualification Procedure
  a. Impact Velocity
  b. Dummy Alignment on the Test Bench
X. Other Testing Issues
  a. Dummy Clothing
  b. Recovery Time Between Tests
  c. Soak Time
  d. Tolerance on the Impactor Mass
  e. Neck Cable Torque in PADI
  f. Pendulum Deceleration Pulse
  g. Neck Potentiometers
XI. Qualification Performance Corridors
  a. Shoulder Qualification Corridors
  b. Thorax with Arm Qualification Corridors
  c. Thorax without Arm Qualification Corridors
  d. Abdomen Qualification Corridors
  e. Pelvis Acetabulum Qualification Corridors
  f. Pelvis Iliac Qualification Corridors
XII. Drawing Package and PADI
  a. Issues Raised By Both FTSS and Denton
  b. Issues Raised By FTSS
  c. Issues Raised By Denton
  d. Agency Corrections and Clarifications
XIII. Regulatory Analyses and Notices

I. Introduction

This final rule responds to petitions for reconsideration of a December 14, 2006 final rule (71 FR 75342; Docket No. NHTSA–2006–25442) that amended 49 CFR part 572 to add specifications and qualification requirements for a 5th percentile adult female side impact test dummy, called the ''SID–IIs.'' The notice of proposed rulemaking (NPRM) preceding the December 14, 2006 final rule was published on December 8, 2004 (69 FR 70947; Docket NHTSA–2004–18865; reopening of comment period, March 8, 2005, 70 FR 11189). The SID–IIs is used by NHTSA and other testing organizations in side impact test programs. The use of the SID–IIs test dummy in NHTSA's enforcement program assessing vehicles' compliance with Federal Motor Vehicle Safety Standard (FMVSS) No. 214 (''Side impact protection,'' 49 CFR 571.214) was discussed in and made part of a final rule upgrading FMVSS No. 214 published on September 11, 2007.[1] In the upgrade, NHTSA added a dynamic pole test to FMVSS No. 214, to supplement the moving deformable barrier (MDB) test currently in the standard. In the dynamic pole test, a vehicle is propelled sideways into a rigid pole at an angle of 75 degrees, at any speed up to 32 km/h (20 mph). Compliance with the pole test will be determined in two test configurations, one using the SID–IIs test dummy representing small adult females and the other using an ''ES–2re'' test dummy representing mid-size adult males.[2] The final rule required vehicles to protect against head, thoracic and other injuries as measured by the two test dummies. The final rule also specified using the dummies in FMVSS No. 214's MDB test,

[1] 72 FR 51908, Docket No. NHTSA–2007–29134; response to petitions for reconsideration, June 9, 2008, 73 FR 32473; Docket No. NHTSA–2008–0104. NHTSA will be publishing a second response to petitions for reconsideration addressing other issues.

[2] NHTSA added the specifications for the ES–2re to 49 CFR part 572 (*see* final rule, December 14, 2006, 71 FR 75304, Docket No. NHTSA–2004–25441; response to petitions for reconsideration, June 16, 2008, 73 FR 33903, Docket No. NHTSA 2008–0111).

which simulates a vehicle-to-vehicle, ''T-bone'' type intersection crash.[3]

II. Description of SID–IIs

a. General Description

The December 14, 2006 final rule incorporated specifications for the SID–IIs (or SID–IIsD) consisting of: (a) A drawing package containing all of the technical details of the dummy; (b) a parts list; and (c) a user manual containing procedures for inspection, assembly, disassembly, use, and adjustments of dummy components.[4]

The anthropometry and mass of the SID–IIsD are based on the Hybrid III 5th percentile frontal female dummy and also generally match the size and weight of a 12- to 13-year-old child. The head and neck designs are based on the Hybrid III 5th percentile female dummy. The legs are Hybrid III 5th percentile female design available also with femur load cell instrumentation. At the same time, unlike the Hybrid III series of dummies, the SID–IIsD's torso construction is particularly oriented for assessing the potential for side impact injury. The dummy's upper torso is made up of a rigid metallic spine to which six spring steel bands lined with bonded polymer damping material are attached to simulate the impact performance of the human shoulder (1 rib), thorax (3 ribs) and abdomen (2 ribs). Linear potentiometers are attached from the ribs to the spine for compression measurements. Provisions are available for mounting tri-axial accelerometer packs to the spine at T_1 and T_{12} and at each rib.[5] Replaceable foam pads are secured directly to the ribs and a neoprene jacket covers the complete chest assembly. The upper torso accommodates the attachment of the neck at the upper end and the lumbar spine at the lower end.

A stub arm on the impacted side is attached to the lateral aspect of the shoulder through a three-axis load cell. Tri-axial accelerometer packs can also be installed at the shoulder and at the upper and lower parts of the stub arm for assessing injuries in upper extremities in side crashes.

The dummy's pelvis is a machined assembly with detachable hard urethane iliac wings at each side and covered by vinyl flesh. The pelvis design is shaped in a seated human-like posture and allows the attachment of the lumbar spine at its top and the legs at the left and right sides. The pelvis can be impacted from either side without any change in hardware. Foam crush plugs at the hip joint, which are replaced after each impact, are used to control the lateral pelvis response. The pelvis design allows the measurement of impact loads at the acetabulum and iliac wing as well as accelerations at the pelvis center of gravity (cg). A thin steel backer plate between the iliac wing and iliac load cell prevents the iliac wing material from deforming and offloading a portion of the iliac load cell measurement.

b. Performance Characteristics

The December 14, 2006 final rule also specified a qualification process for the SID–IIs dummy, i.e., a series of specified component and whole body-level tests, to verify that a test dummy's response measurements fall within prescribed ranges. For any test dummy to be a useful test device in a compliance or vehicle rating setting, responses to controlled inputs must be reproducible and repeatable. The tests and response ranges (or performance corridors) for the SID–IIs, specified in 49 CFR part 572 subpart V, ensure that the dummy's responses to controlled inputs are reproducible and repeatable, thus assuring full and accurate evaluation of occupant injury risk in vehicle tests. The test procedures and performance specifications for qualification of the SID–IIs as set forth in the December 14, 2006 final rule established performance levels for the dummy's head, neck assembly, shoulder, thorax with arm, thorax without arm, abdomen, pelvis acetabulum, and pelvis iliac.

III. Petitions for Reconsideration

The Alliance of Automobile Manufacturers[6] (Alliance) and test dummy manufacturers First Technology Safety Systems (FTSS) and Denton ATD (Denton) petitioned for reconsideration of the December 14, 2006 final rule.[7] The petitioners generally supported the incorporation of the SID–IIs into 49 CFR part 572, but had concerns with technical aspects of the Part 572 specifications and with the drawings incorporated by reference into the regulation. The main suggestions of each of the petitioners are briefly summarized below:

a. The Alliance suggested using a material to manufacture the iliac wing that is recommended by the Occupant Safety Research Partnership (OSRP) SID–IIs task group,[8] a material that the Alliance believes is ''more manufacturable and stable'' than the material referenced in the final rule. (The petitioners refer to the recommended material as ''Material #3.'') The Alliance also petitioned to change aspects of the test procedures of the shoulder (dummy arm orientation; probe impact velocity), of the thorax with arm (time when peak acceleration should be measured), and of the abdomen (probe impact velocity) qualification tests, and made other suggestions regarding general test procedures. The Alliance also petitioned for changes to the performance corridors for the tests of the shoulder, thorax with and without arm, abdomen, pelvis iliac wing (based on the use of Material #3, or ''M3''), and pelvis acetabulum.[9]

b. FTSS petitioned to change to M3 and a standoff design for the iliac wing, and suggested changes relating to the tests of the thorax with arm (time when peak acceleration should be measured) and pelvis acetabulum (time when peak acceleration should be measured). The

[3] The September 11, 2007 final rule fulfilled the mandate of Section 10302 of the ''Safe, Accountable, Flexible, Efficient Transportation Equity Act: A Legacy for Users,'' (SAFETEA–LU), Pub.L. 109–59 (Aug. 10, 2005; 119 Stat. 1144). Section 10302(a) of SAFETEA–LU.

[4] The drawings, parts list and user manual incorporated by reference by the December 14, 2006 final rule were placed in NHTSA Docket No. 2006–25442. Materials that have been updated by today's final rule are placed in the docket for today's document.

[5] T_1–sensor location on the dummy's thoracic spine equivalent to the first thoracic vertebra on the human spine. T_{12}–sensor location on the dummy's thoracic spine equivalent to the 12th thoracic vertebra on the human spine.

[6] Members at the time of the petition for reconsideration were: BMW Group, DaimlerChrysler, Ford Motor Company, General Motors, Mitsubishi Motors, Porsche, Toyota, and Volkswagen. DaimlerChrysler separated subsequent to the petition for reconsideration, and additional members at the time of this final rule are Mazda and Mercedes-Benz USA.

[7] Additionally, a letter in support of the Alliance and FTSS petitions was received from the Insurance Institute for Highway Safety (IIHS).

[8] OSRP is a consortium of the U.S. Council for Automotive Research (USCAR). USCAR was formed in 1992 by DaimlerChrysler, Ford and General Motors as a research and development organization. The SID–IIs was originally developed by the OSRP, in conjunction with FTSS. The dummy was extensively tested in the late 1990s and early 2000s by Transport Canada, and to a limited extent by U.S. automobile manufacturers and suppliers, and IIHS. Modification of and upgrades to the SID–IIs design ultimately lead to the development of the build level D version of the dummy. The December 14, 2006 final rule adopted the SID–IIs Build Level D test dummy into 49 CFR part 572.

[9] On December 13, 2007, the Alliance submitted additional SID–IIsD qualification data and recommended performance corridors as an appendix to their petition for reconsideration to the FMVSS No. 214 final rule published on September 11, 2007. Because the submission was received late in the rulemaking process, these data were not incorporated into the NHTSA/FTSS data set for inclusion in statistical analyses. However, the new Alliance data were considered in the formation of corridors by comparing the Alliance-recommended corridors to those derived using the NHTSA/FTSS data set, and adjusting the NHTSA corridors, if warranted.

petitioner also suggested changes to the performance corridors for the tests of the shoulder, thorax without arm, abdomen, and pelvis iliac and acetabulum. The petitioner also identified portions of the regulatory text and a number of drawings incorporated by reference into Part 572 that the petitioner believed needed correction.

c. Denton suggested that NHTSA adopt performance corridors recommended by the Society of Automotive Engineers Dummy Testing Equipment Subcommittee (SAE DTES) of the Human Biomechanics and Simulation Standards Committee. Denton also identified regulatory text and drawings that the petitioner suggested needed correction.

IV. Overview of Response to the Petitions

Today's document responds to the following issues raised in the petitions for reconsideration in the following order: issues relating to the pelvis of the dummy; shoulder qualification procedures; thorax with arm qualification procedures; thorax without arm qualification procedures; abdomen qualification procedures; other testing issues (*e.g.,* dummy clothing, recovery and soak times); qualification corridors; and changes to the drawing package and to NHTSA user's manual for the dummy (Procedures for Assembly, Disassembly and Inspection).

Among other things, today's final rule amends iliac performance criteria to allow for a new material formulation to be used for the iliac wing of the dummy's pelvis, defines a time period in which accelerations are measured in the thorax with arm and pelvis acetabulum tests, slightly modifies some of the test procedures used in the qualification tests (*e.g.,* by slightly lowering the impact speed of the impactor in several tests and by increasing the recovery time for the pelvis-iliac and pelvis-acetabulum tests), adjusts the performance corridors for the various impact tests of the dummy, and revises parts of the drawing package and the user's manual for the dummy.

V. Issues Relating to the Pelvis of the Dummy

a. Iliac Wing Material

As explained in the December 2006 final rule, during the course of NHTSA's evaluation of the repeatability and reproducibility of the SID–IIs dummy eventually adopted into part 572, the agency observed that its set of left side iliac wings had been used extensively for several years and was showing signs of wear. The agency obtained new replacement iliac wings from the dummy manufacturer (FTSS) and later observed that the replacement wings produced approximately 20 percent lower impact responses in dynamic impact tests than the previously-tested wings. NHTSA contacted FTSS and was informed that formulation of the polyurethane material for the wings changed in 2004 because the raw material previously used was no longer available due to toxicity issues.[10] The agency analyzed the post-2004 iliac wings and estimated that using them in NHTSA's FMVSS No. 214 fleet testing program [11] would have had the effect of lowering the average driver occupant pelvis force approximately 8 percent and that of the passenger about 3 percent, which would have amounted to only one instance out of 25 in which the pelvis force changed from just being above the Injury Assessment Reference Value (IARV) limit to just being below.[12] In view of those findings and because the material formulation of the iliac wings prior to 2004 (for convenience, we refer to this material formulation as ''Material #1'' or ''M1'') was no longer available, NHTSA decided to specify pendulum response data for the iliac wing that reflected the use of the softer post-2004 iliac material formulation (henceforth referred to as ''Material #2'' or ''M2''). (71 FR at 75355; December 14, 2006.)

Requested Change

In response to the final rule, all the petitioners requested that the regulation specify performance characteristics enabling the use of a new material formulation, which will be referred to as Material #3 (M3), for the iliac wing in place of M2.

FTSS stated that it began manufacturing wings composed of M3 on June 1, 2006, in response to direction from the OSRP SID–IIs task group and after finding that M3 was a suitable replacement for M1 and M2. FTSS also stated that it stopped manufacturing M2 iliac wings on May 30, 2006. According to FTSS, M3 iliac wings retain their shape better over time and are not subject to a warping found in M2 iliac wings.

In its petition, the Alliance noted that:

after extensive tests and evaluation, the OSRP SID–IIs task group recommended the use of material #3 for the following reasons: (1) it is available; (2) it is more manufacturable and stable than material #2; and (3) it has demonstrated repeatable performance. Material #3 is generally slightly stiffer than the original pre April 2004 (material #1) and may result in higher recorded loads.

Denton also supported the use of Material #3. The petitioner submitted information from SAE DTES which indicated there was no statistical means of choosing between M2 and M3, but that permanent deformation was observed in M2. The information also suggested that M3 will have less variability in manufacturing.

In its February 8, 2007 letter supporting the petitions for reconsideration from the Alliance and FTSS, IIHS stated that ''[t]he most important aspect of the petitions is the request to change the specification for the SID–IIs iliac wing to the updated design supported by the'' OSRP and FTSS.[13] IIHS stated that the updated iliac wing includes a material change to improve repeatability and durability, and integral metal standoffs to prevent interference with measurements from the iliac load cell that occurs over time due to compression of the softer material at the interface of the original design. IIHS stated that it converted all the SID–IIs dummies (Build Level C) used in its consumer information side impact test program to include the updated design. IIHS believed that it is important to harmonize the dummies used in its tests with the SID–IIs dummy (Build Level D) used in NHTSA's tests, and that adoption of the Material #3 iliac wing is critical to avoid differences in test results that could occur if organizations used different wing designs. IIHS also believed that using two different iliac wing designs would result in additional cost to laboratories that conduct both NHTSA-compliance and IIHS consumer information crash tests.

Agency Response

NHTSA is granting the petitions to adjust performance criteria so that Material #3 (M3) can be used for the iliac wings.[14] NHTSA's Vehicle Research and Test Center (VRTC) conducted quasi-static testing in the

[10] Docket No. NHTSA–2004–18865–36.

[11] Determination was made using data from the NHTSA Fleet Testing for FMVSS 214 Upgrade, MY 2004–2005, Docket No. NHTSA–2007–29134–0003.

[12] As stated in the December 2006 final rule, this estimate was based on calculated adjustments of the total force on the pelvis by taking into account lower impact responses of the softer iliac wing.

[13] IIHS stated in its letter that it also supported the request of the petitioners for NHTSA to consider data from multiple laboratories when establishing performance criteria for dummy verification tests. IIHS stated that ''This is necessary to account for normal variability among laboratories.''

[14] We note, however, that the material specification on the iliac wing drawings (Polyurethane 85–95 Shore A or equivalent) does not have to be changed to permit M3, so we are not changing it.

evaluation of the M3 iliac, which is described in the report ''SID–IIsD Iliac Wing Studies'' placed in the docket for this final rule. In these quasi-static tests, isolated iliac wings were loaded to 4,000 N over a period of several minutes. Quasi-static compression results from at least three tests on each of six new M3 iliac wings indicate that M3 is much closer in stiffness to M1 than M2. The agency used SID–IIs dummies with iliac wings made from M1 in agency vehicle and sled testing, so there is a large body of data related to the M1 wings. These data were used in part to develop the IARV referenced in FMVSS No. 214 for the pelvic load criterion measured by the SID–IIs. Because M3 is a material formulation that is very close in stiffness to the M1 iliac wings, NHTSA is adopting M3 since the agency has knowledge of and a familiarity with the properties of M1 wings, while NHTSA's experience with the M2 wings is more limited. Further, we agree with IIHS that using M3 iliac wings would better harmonize the test dummies used by NHTSA, IIHS and the industry, and would make the test results obtained by the testing components of each organization more comparable and better focused on the development of appropriate countermeasures. Also, according to the petitioners, M3 is more stable than M2, demonstrates repeatable performance, is readily available while M2 is not, and does not exhibit deformation characteristics exhibited by M2. For these reasons, the petitioners' request to specify characteristics that recognize the use of M3 in the manufacture of the iliac wing is granted.

The Alliance in its petition for reconsideration said that Material #3 is generally slightly stiffer than Material #1 and may result in higher recorded loads. We agree that in quasi-static tests, M3 wings were shown to be slightly stiffer than M1 wings, as seen in the ''SID–IIsD Iliac Wing Studies'' report, *supra.* However, the difference in stiffness between these wings is very small, so large differences in response in dynamic test environments are not expected. The similarity of response for the two different iliac wing material formulations is illustrated by the pelvis-iliac qualification test results. Table 1 shows that the average peak iliac force measured in qualification tests with M3 wings was 4588 N, while the average force in qualification tests with M1 wings was 167 N (3.6%) higher at 4755 N.[15]

TABLE 1—COMPARISON OF M1 AND M3 QUALIFICATION DATA

		Probe velocity (m/s)	Probe energy (J)	Maximum probe acceleration (g)	Maximum pelvis Y acceleration (g)	Maximum Iliac force (N)
M1	Min	4.21	126.02	38	29	3986
	Max	4.43	137.02	46	45	5448
	Average	4.35	133.51	41.36	34.99	4755.26
	SD	0.04	2.38	1.55	3.34	373.49
	CV	1.02%	1.78%	3.76%	9.55%	7.85%
M3	Min	4.21	123.67	35.55	27.24	3430
	Max	4.34	133.44	45.98	40.93	5275.53
	Average	4.29	129.55	40.84	34.03	4588.36
	SD	0.03	2.57	2.09	3.41	329.64
	CV	0.69%	1.98%	5.13%	10.03%	7.18%

In evaluating these results, we kept in mind that there were some factors that could have affected the iliac force measurements for each data set. First, when M1 was used, the design of the iliac wing did not incorporate two features that have since been added to prevent off-loading of the iliac load cell: integral metal ''standoffs'' within the wing; and a thin steel backer plate between the iliac wing and load cell (see Section V.b).

Second, deformation was observed on the left side M1 wings after extensive use, as noted in the report ''SID–IIs Iliac Certification Development,'' which was placed in the docket with the December 2006 final rule. These two issues could lead to an increased chance of the iliac wing deforming under load and shorting the iliac load cell, which would in turn result in lower measured iliac loads. This problem of iliac load cell shorting was first identified with the M2 iliac wings, which are much softer than the M1 wings. Thus, it is unknown whether this occurred with M1 wings. If load cell shorting did occur in any of the M1 qualification tests, it would have the effect of lowering the average response somewhat.

Second, although all M3 wings included the new integral metal ''standoffs,'' a number of tests in the M3 data set did not have a backer plate installed. If shorting did occur in any of these tests, the M3 average peak force may be slightly lower than it would have been without load cell shorting. However, there is no evidence that these M3 wings without a backer plate will contact the iliac load cell in qualification tests as illustrated in the ''SID–IIsD Iliac Wing Studies'' report. Thus, we do not believe the absence of a backer plate affected the load cell responses for M3 wings in qualification tests (see Section V.b).

Third, in general, the M1 tests were conducted at a slightly higher impact velocity than the M3 tests, which intuitively could result in higher force readings in M1 tests. However, when plotting a linear regression through M1 iliac force responses vs. impact velocity, there was no strong correlation with impact velocity ($R^2 = 0.21$). Therefore, we do not believe these slight differences in impact velocities had a significant effect on the average peak iliac forces.

In view of the quasi-static and dynamic test results from M1 and M3 iliac wings, we believe that their performance in the crash test environment will be very similar. Quasi-static test results show that the new M3 wings are slightly stiffer, while dynamic test results indicate slightly higher forces in M1 wings. This seeming discrepancy leads us to believe that differences between the wings are

[15] M1 qualification data and plots comparing M1 and M3 iliac force responses can be found in the memo ''M1 qualification data and comparison to M3 qualification data.''

within the natural variation of response that is seen in different types of test environments. Because of this, we believe that the wings perform very similarly, and that the use of M3 wings will not result in iliac forces that are consistently higher than M1 iliac wings. Thus, allowing a change in the wing material formulation is not likely to have a significant effect on pelvis force measurements in FMVSS No. 214.

b. Iliac Load Cell Stand-Off Design

The SID–IIsD final rule adopted an iliac wing design that was a polyurethane wing (Dwgs. 180–4320–1 and –2) with an embedded steel support plate (Dwg. 180–4321). Additionally, the final rule specified the use of a thin steel backer plate between the iliac wing and the iliac load cell to prevent the iliac material from off-loading force to the center of the load cell. Figure 1 illustrates how the backer plate is used in conjunction with the iliac wing and load cell, as specified in the December 2006 final rule.

Requested Change

In response to the final rule, FTSS noted that, in general, the iliac wing specified in the final rule has the propensity to cause a load path short due to its design. According to FTSS, the original iliac wing design resulted in ⅛-inch polyurethane material being sandwiched between the embedded iliac wing support plate and the iliac load cell. It found that the amount of loading force the iliac is able to accurately measure can vary depending upon how much torque the iliac mounting screws are under, how much the polyurethane material creeps over time, and how much the iliac maintains its original shape.

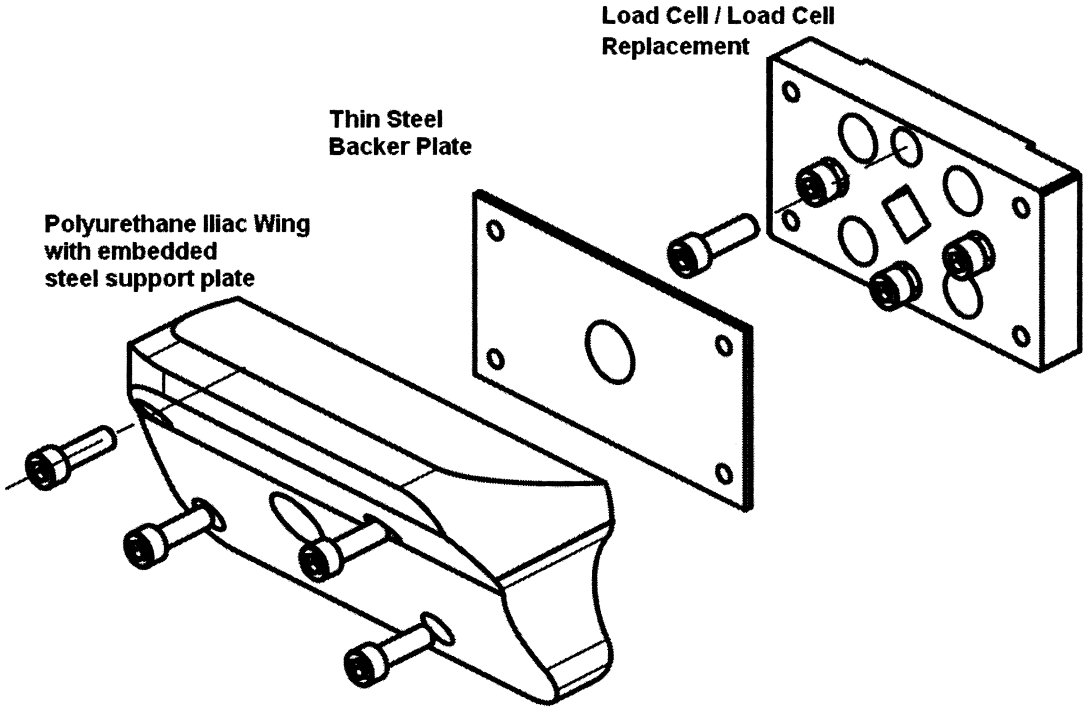

Figure 1: Alignment of iliac wing, backer plate, and load cell/replacement[16]

FTSS stated that it has designed a new iliac substructure (support plate) that has a positive bearing surface contact between the iliac wing and the load cell to create a rigid mounting surface between the iliac wing and load cell.[17] Essentially, the ⅛-inch thick polyurethane material around the mounting screw holes was replaced with ⅛-inch thick steel ''standoffs'' that extend from the embedded plate to the edge of the wing so that the mounting screws would draw the iliac wing to the load cell through a metal contact instead of through polyurethane. According to FTSS, this design eliminated the potential for load path shorting since standard fastener torque values can now be specified for the iliac wing mounting hardware without losing the torque over time, and it also eliminated the material creep found in the original iliac design. FTSS recommended that NHTSA evaluate this new design and include it in the drawing package in place of the original.

The Alliance and IIHS also recommend the use of Material #3 iliac wings with the standoff design. The Alliance ''agree[d] with the observation that the original wing design can deform and off-load the loads being transferred to the iliac load cell resulting in artificially low measurements.'' It stated, however, that while the use of the thin steel backer plate specified in the final rule (as shown in Figure 1) will reduce the likelihood of off-loading the load cell, it will not reduce deformation of the polyurethane iliac wing. It suggested that a more robust solution would be to use a rigid steel plate with standoffs that are embedded in the polyurethane iliac wing during manufacturing. The Alliance stated that ''this stronger plate with standoffs eliminates the possibility of off-axis loading.''

The Alliance petition for reconsideration also included a

[16] SID–IIsD final rule drawing package, Docket No. NHTSA–2006–25442–0012.

[17] The FTSS iliac wing design is illustrated in its petition, Docket No. NHTSA–2006–25442–0031.

presentation given by Denton to the OSRP that discussed test results supporting use of the standoff design. Although details of this presentation are not clear, it appears that when Denton loaded an iliac load cell through a simulated SID–IIs iliac wing without standoffs, it observed extrusion of the urethane when the mounting screws were tightened to 60 inch-pounds (in-lb), which it said caused ''shorting'' of the load path. Without a mounting screw preload,[18] the center of the iliac contacted the center of the load cell, shorting the load path at approximately 750 lb (3,336 N). We believe the presentation is indicating that without standoffs, the mounting screws cannot be tightened to a degree where load shorting does not occur. *I.e.,* when the screws were tightened to 60 in-lb, the load path was shorted by extrusion of urethane, and when the mounting screws were tightened to a lesser degree, the path was shorted by contact of the center of the wing to the load cell. With standoffs, apparently Denton found that shorting did not occur. With standoffs, when 1000 lb (4,448 N) of load was applied to the center and over each mounting screw, a worst-case difference of 4.3% resulted in measured versus applied load, which Denton stated is within acceptable limits. Denton did not report any shorting of the load path when the iliac plate with standoffs was tested, although they did observe extrusion of the urethane material when high loads were applied to the simulated wing outside the perimeter of the load cell. In its conclusion, Denton's presentation stated that the iliac wings without standoffs should not be used.[19]

Agency Response

After reviewing the data submitted by the petitioners, NHTSA is granting the request to have an iliac wing support plate with standoffs as part of the iliac design. The petitioners provided extensive evidence in favor of the standoffs.

At the same time, we are also specifying use of the thin steel backer plate. When the agency evaluated the standoff design, VRTC conducted qualification testing of the M3 iliac with standoffs, with and without the backer plate between the wing and load cell, as specified by the final rule (Table 2). VRTC found that qualification test results from these two iliac configurations were very similar. The average response from wings without a backer plate was always lower than that from wings with a backer plate as seen in Table 2, but was also always less than a 2.5% reduction from the response with a plate.[20] Thus, the influence of the backer plate appears to be negligible. However, the plate can act to prevent load path shorting through wing contact with the center of the load cell. Although there were no instances of load path shorting during qualification tests without a plate, two quasi-static tests without a backer plate were conducted on both the softest and stiffest M3 iliac wings with standoffs. In this set of tests, the softest iliac wing made contact with the center of the load cell at a load of about 3,700 N (831.8 lb). To prevent this from happening, we have decided to retain use of the thin steel backer plate between the iliac wing and iliac load cell.

TABLE 2—COMPARISON OF NHTSA M3 WITH STANDOFFS; ILIAC RESULTS WITH AND WITHOUT BACKER PLATE

Pelvis skin No.	Iliac wing No.	Backer plate?	Number of tests		Peak probe acceleration	Peak lateral pelvis acceleration	Peak iliac force
764	L–318	Yes	24	AVG.	40.27	30.87	4686.76
				S.D.	0.55	1.04	100.10
				%CV	1.4%	3.4%	2.1%
764	L–318	No	10	AVG.	39.44	30.43	4574.26
				S.D.	0.77	1.34	148.69
				%CV	1.9%	4.4%	3.3%
Percent Change Plate to No Plate Average Response					−2.06%	−1.43%	−2.40%
765	R–310	Yes	6	AVG.	41.79	35.32	4930.00
				S.D.	0.53	1.08	102.09
				%CV	1.3%	3.0%	2.1%
765	R–310	No	6	AVG.	41.50	34.62	4913.20
				S.D.	0.33	0.96	70.88
				%CV	0.8%	2.8%	1.4%
Percent Change Plate to No Plate Average Response					−0.69%	−1.98%	−0.34%

c. Iliac Qualification Procedure

1. Use of OSRP Procedure

The final rule established a qualification procedure for the pelvis iliac load cell, in addition to a procedure that assessed the performance of the acetabulum load cell. The pelvis iliac procedure checks the response consistency of the iliac load cell as installed in the dummy's pelvis. In the pelvis iliac test, a 13.97 kilogram (kg) impactor is accelerated to 4.3 ± 0.1 meters per second (m/s) and directed laterally into the pelvis of the dummy such that its impact surface strikes the centerline of the iliac access hole in the iliac load cell. Performance limits are set for peak impactor and pelvis lateral accelerations and peak iliac forces. The procedure was documented in the report ''SID–IIs Iliac Certification Development,'' (August 29, 2006).[21]

[18] We are unsure what is meant by ''mounting screw preload,'' however we believe that it means that the mounting screws were tightened to an amount less than 60 in-lb.

[19] The SAE/DTES material Denton enclosed with its petition recommended the standoff design rather than the backer plate design. It stated that based upon mechanical principles, the standoff design eliminates the possibility of material creep that could lead to screws loosening.

[20] Although the backer plate adds mass to the lower torso, it only adds 0.2 lb, or 0.7% of the lower torso weight. This small mass increase is not expected to appreciably increase the forces measured in qualification tests.

[21] Docket No. NHTSA–2006–25442–19.

Requested Change

In its petition for reconsideration, the Alliance requested that the iliac qualification procedure be replaced by an OSRP procedure since the petitioner's member companies had no experience with the final rule test condition and probe.

Agency Response

This request is denied. The petitioner provided no comparative analysis of how the OSRP procedure differs from that of the final rule, how Alliance members would be negatively impacted by the final rule procedure, or how the repeatability and reproducibility of the OSRP procedure compares to that of the final rule.

Among the differences between the two procedures, the OSRP procedure uses a calibration bench rather than a flat, rigid, horizontal surface; it requires the dummy to use the torso jacket and cotton underwear pants (unlike the final rule that requires removal of the clothing); it seats the dummy with the pelvis overhanging the seat surface by 78 ±2 millimeters (mm); and it uses the impactor specified for the abdominal impact test.

During NHTSA's development of the iliac qualification test procedure, various test conditions and probe faces were evaluated, including use of a calibration bench and an abdominal impactor face as suggested by the OSRP. The agency determined that use of the calibration bench caused concern since it can be difficult to hit the target impact area without the pendulum, or its guide wires, interfering with the bench. With regard to the use of the abdominal impactor face, we found that due to the geometry of the pelvis, setting the abdominal probe face such that it interacted with the iliac region in a repeatable fashion was difficult, even with careful positioning. Because of this, a new probe face and procedure were developed by the agency for the final rule that enable certification of the iliac without impacting the pelvis plug. Use of an alignment tool was also recommended to aid in a repeatable setup. Furthermore, NHTSA is satisfied that the final rule qualification procedure works well and there are no identifiable shortcomings of its use by the petitioners.

2. Pelvis Iliac Probe Acceleration

In the December 14, 2006 final rule, § 572.199 (c)(1) specifies a peak ''lateral'' acceleration of the impactor of not less than 34 g and not more than 40 g.

Requested Change

The Alliance recommended deleting the word ''lateral'' from the term ''peak lateral acceleration of the impactor * * * '' Denton believes that ''lateral'' should be replaced with ''longitudinal.''

Agency Response

The agency agrees to delete the word ''lateral'' from § 572.199(c)(1), but does not agree to add the word ''longitudinal.'' The peak impactor acceleration is measured on the long axis of the probe, so we agree that the term ''lateral'' is inappropriate. However, it is unnecessary to state that the acceleration is longitudinal.

3. Specification of Tape

In the December 14, 2006 final rule, the specification for use of tape is found in figures V9–A and V9–B of the regulatory text, which indicate the use of ''masking tape as required to hold dummy in position.'' The use of tape is also found in the supporting report, ''Certification Procedures for the SID–IIs Build Level D Side Impact Crash Test Dummy,'' (June 21, 2006), hereinafter referred to as the ''2006 certification procedures document.'' [22] This report states for the iliac qualification procedure: ''using masking tape from the top of the dummy's head to the seating surface, level the shoulder rib so that the fore/aft plane is 0°±1 relative to horizontal,'' and later states to ''adjust the masking tape as necessary'' to ensure proper dummy positioning.

Requested Change

The Alliance petitioned to request that if NHTSA retains the pelvis-iliac test as specified in the final rule, then it recommends that the width and amount of tape allowed to hold the dummy in its initial position be specified.

Agency Response

We agree to this request. We have revised the 2006 certification procedures document, now named ''Qualification Procedures for the SID–IIsD Side Impact Crash Test Dummy,'' [23] to clarify the use of tape for dummy alignment, as follows: ''Using approximately 3 feet of standard 1″ wide masking tape from the top of the dummy's head to the seating surface, level the shoulder rib so that the fore/aft plane is 0°±1° relative to horizontal.'' A footnote has been added that states, ''Alternatively, a material with maximum static breaking strength of 311 N (70 lb) may be used to support the dummy in position.'' (This specification was based on a similar specification in FMVSS No. 208, paragraph S24.4.2.4, which states, ''If necessary, material with a maximum breaking strength of 311 N (70 lb) and spacer blocks may be used to support the dummy in position.'') We have also revised Figures V9–A and V9–B of the regulatory text for the SID–IIs dummy to add the footnote, to provide information about the characteristics of the masking tape.

4. Corrections

A. Specification of Load Cell in Regulatory Text

FTSS informed NHTSA of an error in the pelvis-iliac section of the regulatory text, section 572.199(a).[24] This error was also discovered by the agency. The section specifies the use of acetabulum load cell SA572–S68. We agree with FTSS that the section should instead specify the iliac wing load cell SA572–S66.

B. Impactor Alignment in Regulatory Text

While reviewing the SID–IIsD final rule regulatory text, the agency identified an error in the iliac qualification test procedures. Section 572.199(b)(7) describes probe alignment prior to the pelvis iliac qualification test, and states that ''the 88.9 mm dimension of the probe's impact surface is aligned horizontally.'' The 88.9 mm dimension of the probe's impact surface should be aligned vertically, since the probe face is a rectangle, 50.8 × 88.9 mm, and the shorter side of the probe face is oriented horizontally, as seen in the 2008 qualification procedures document. We are making this correction in this final rule in 572.199(b)(8).

d. Pelvis Acetabulum Qualification Procedure

1. Pelvic Plug Pre-Crush and Associated Variability

In the December 14, 2006 final rule, NHTSA specified a compression force requirement that the pelvis plugs must exhibit when pre-crushed a depth of 2.5–3.5 mm. The pelvis plug crush

[22] The June 21, 2006 Certification Procedures document is available at Docket No. NHTSA–2006–25442–0018. The document provides for illustration purposes detailed descriptions of the test procedures specified for the SID–IIs in 49 CFR part 572, subpart V, and illustrates how the various tests are conducted by NHTSA.

[23] Dated July 1, 2008 and placed in the docket with this final rule. ''Certification'' was changed to ''Qualification'' for consistency of terminology in NHTSA technical reports and final rules. This 2008 report updates the 2006 document to reflect all the changes discussed in today's final rule and to make minor corrections/clarifications of the text.

[24] Docket No. NHTSA–2006–25442–0042.

development was discussed in the technical report entitled, ''SID–IIs Pelvis Plug Certification Development,'' (May 3, 2006, Docket 2006–25442–010), and the pre-crush procedures and plug qualification [25] requirements were set forth in the plug drawing 180–4450.

Requested Change

In petitions for reconsideration, Denton/SAE DTES agreed that a pre-crush depth of 3 mm should be used. However, the Alliance expressed concern about the levels of variability of the pelvic region that it said it observed in NHTSA [26] and OSRP tests. The Alliance also stated that it observed significant differences in acetabulum forces in three tests of identical vehicles where one test was conducted with a pelvis plug pre-crushed 3 mm and two tests were conducted with a pelvis plug pre-crush of 2 mm. The Alliance provided time-history plots of the acetabulum force, iliac wing force, combined pelvis force, and pelvis acceleration from three oblique pole tests conducted at three different laboratories. The petitioner stated that it is not clear whether the differences in the acetabulum response are due to the differences in the depth of pre-crush or due to other variables, and urged NHTSA to investigate this further and take the variability into consideration when developing the final rule for FMVSS No. 214.

Agency Response

We are not making any changes to the pelvis plug pre-crush procedure. The Alliance provided no discussion related to its concern about the variability of OSRP data and NHTSA data in the qualification and sled test environments. Additionally, the OSRP data was not submitted to the docket, so no comparisons could be made by the agency.

In response to the three vehicle test results, no conclusions can be drawn from the figures provided by the Alliance because two of the pelvis plugs used in the tests were pre-crushed only 2 mm. We have found that the pelvis response using plugs pre-crushed only 2 mm is unpredictable. As discussed in the ''SID–IIs Pelvis Plug Certification Development'' report released with the December 2006 final rule,[27] VRTC has found that the pelvis plug requires at least 3 (±0.5) mm of crush in order to characterize the plug response and ensure repeatable and reproducible pelvis responses in qualification, sled and vehicle tests. This is because the plug response does not become linear until after 2.5 mm of crush, as shown in Figure 5 of this report. It is necessary to reach this linear region during plug qualification so that plug behavior at higher levels of compression (*e.g.,* in qualification, sled and vehicle tests) can be predicted. At 2 mm of crush, as was used in two of the vehicle tests referred to by the Alliance, the plug response is still within a transition region, where plug behavior at higher levels of crush cannot be predicted. Thus, 2 mm of plug pre-crush is insufficient.

Based on the agency's experience with the pelvis plugs, the Alliance's finding that the acetabulum forces and other pelvis measurements were different for plugs pre-crushed 2 mm and plugs pre-crushed 3 mm is not surprising. Since the high-crush responses of plugs pre-crushed 2 mm are not predictable, the responses derived from these plugs are not comparable to those from 3 mm pre-crushed plugs. Differences between the 2 mm plug traces and the 3 mm plug trace could have occurred because these two 2 mm plugs had similar properties that did not match those of the 3 mm plug, but ultimately, there is no way of knowing what the behavior of these two 2 mm pre-crushed plugs was going to be. Furthermore, we do not know the extent by which the responses may have been affected by the variability in dummy set-up procedures and crash tests at the three different labs.

2. Pelvic Plug Qualification Corridor

In the December 14, 2006 final rule, plug qualification requirements were provided in the ''SID–IIs Pelvis Plug Certification Development'' (May 3, 2006) report and on drawing 180–4450 of the SID–IIsD drawing package.

Following the final rule, FTSS indicated that it carried out extensive testing on the pelvis plug according to the final rule procedures and corridors, testing close to one thousand pelvis plugs. Compression force at deflections of 0.5 mm, 1.0 mm, 1.5 mm, 2.0 mm, 2.5 mm and 3.0 mm were provided and plotted in their petition addendum.[28] From this data, FTSS petitioned NHTSA to alter the loading portion of the pelvis plug qualification corridor so that it has the following coordinates: Lower bound (0.5 mm, 50 N) and (1.5 mm, 915 N); upper bound (0.5 mm, 850 N) and (1.5 mm, 1715 N). The lower bound of the FTSS-proposed corridor is slightly steeper in slope, but very close to the lower bound of the final rule corridor, which has the coordinates (0.5 mm, 50 N) and (1.5 mm, 850 N). The upper bound of the FTSS proposed corridor allows for forces 250–315 N higher than the upper bound of the final rule corridor, which has the coordinates (0.5 mm, 600 N) and (0.5 mm, 1400 N). FTSS did not petition to change the requirements at the end of the plug compression, therefore, the force-deflection ''box'' at 3 ± 0.5 mm of deflection would be the same.

Agency Response

The agency is denying this request. NHTSA's concern is that it is unknown whether the loading portion of the plug force-deflection response has an effect on the dummy response in qualification, sled or vehicle tests. After receiving the petition, VRTC requested FTSS to explain its comment by providing pelvis-acetabulum qualification data that corresponded to the plug data provided in their petition. Such data could better show the agency that the dummy could still pass this qualification test using plugs that met the FTSS-suggested plug loading corridor and the force-deflection corridor at 3±0.5 mm.[29] In response to this request, FTSS provided data, but the data were unhelpful. The passing test results that were provided had either pelvis plug traces that fell within the suggested loading corridor *and* the final rule loading corridor, or did not meet the force-deflection box at 3±0.5 mm. Therefore, it could not be determined whether plugs that have traces that fell within the suggested corridor but outside the final rule corridor would still pass pelvis-acetabulum qualification tests. NHTSA is denying FTSS's petition to change the loading portion of the pelvis plug qualification corridor because it has not been demonstrated that the suggested corridor is acceptable.

3. Pelvis Acceleration Requirement

The December 14, 2006 final rule specified a pelvis acetabulum qualification procedure and set performance corridors for peak pelvis lateral acceleration (§ 572.198).

[25] NHTSA now uses the phrase ''plug qualification'' instead of ''plug certification,'' in agreement with the terminology for evaluating whether a dummy meets the criteria of Part 572.

[26] NHTSA data presented in ''Repeatability and Reproducibility Analysis of the SID–IIs Build Level D Dummy in the Certification Test Environment,'' and ''Repeatability, Reproducibility and Durability Evaluation of the SID–IIs Build Level D in the Sled Test Environment'' (Docket No. NHTSA–2006–25442).

[27] Docket No. NHTSA–2006–25442–0024.

[28] FTSS addendum to their petition for reconsideration, Docket No. NHTSA–2006–25442–0038. We note that the figure in this petition incorrectly depicts the final rule loading corridor.

[29] A memorandum describing this communication has been placed in the docket for this final rule.

Requested Change

Denton/SAE DTES recommended removing the pelvis lateral acceleration requirement from the test due to what was believed to be a large variability of response. An attachment to the petitioner's submission stated that a member of the SAE DTES presented pelvis lateral acceleration data from three different laboratories where the data looked distinctly different. It was noted in the attachment that the shape of the pelvis lateral acceleration peak varied widely, even with a single dummy in one lab. The DTES discussed possible reasons for the high variability of the first peak, but were not able to discern a definite explanation for this behavior. Although they agreed that variability was reduced when the acceleration peak was taken after 5 ms, they did not think that the measurement was necessary for qualification of the dummy and therefore recommended that the peak pelvis lateral acceleration be dropped. Alternatively (as seen in the next section), if the pelvis lateral acceleration parameter were not dropped, Denton/SAE DTES recommended to take the peak after 5 ms to eliminate the variable first peak.

Agency Response

We are denying the request to remove the peak pelvis lateral acceleration from the pelvis acetabulum qualification procedure. The petitioner's request that the pelvis lateral acceleration measurement be removed appears to have originated from the subcommittee's observation of variability in the first peak. This first peak is primarily dependent on the plug characteristics. The petitioner-referenced data was obtained from plugs pre-crushed to 2 mm. As discussed in the previous section, 2 mm of crush is not sufficient to assure consistent performance of the plug in high-crush environments. Therefore, it is likely that the variation observed by the petitioner was due to varying plug characteristics resulting from insufficient plug pre-crush. Because the petitioner based its request on pelvis plugs pre-crushed 2 mm, there is no reasonable basis for removing the measurement of peak pelvis lateral acceleration. In addition, the pelvis lateral acceleration measurement provides additional information as to the whole pelvis response which further assesses the response of the parts, and its requirement in the final rule should be maintained. (However, we are limiting the time period during which peak lateral acceleration will be measured, as discussed in the next section.)

4. Measuring Peak Pelvis Lateral Acceleration 5 ms or More After Contact

In the NPRM proposed regulatory text, S572.197(c)(2) [30] specified that the peak lateral pelvis acceleration was to be taken at 5 ms or more after the impactor contacts the dummy. The final rule did not include a time specification for this measurement.

Requested Change

FTSS requested that the peak lateral pelvis acceleration be taken 5 ms or more after the impactor contacts the dummy. FTSS believed that the variation in the data was much greater when the overall peak was taken instead of the peak after 5 ms, and noted that the first, larger peak is an inertial peak due to loading of the pelvis plug. The Alliance referenced a recommendation from the SAE DTES suggesting that this peak be taken after 5 ms.

Agency Response

We agree that there should be a time specification for the measurement of the peak pelvis lateral acceleration. The final rule preamble did not discuss why the proposed time specification was not adopted. As discussed in the previous section, the first peak of the pelvis lateral acceleration response, which occurs in the first 5–6 ms, is based primarily on the plug response. Since the pelvis-acetabulum test aims to verify the pelvis response, not the plug response, the acceleration during the first 5–6 ms should not be included. However, NHTSA examined pelvis lateral acceleration traces in 11 side impact crash tests conducted with the SID–IIs Build Level D dummy to determine if the first peak, which results from initial pelvis plug crush in qualification tests, was part of the dummy response in vehicle tests. (If the first peak were part of the dummy response, we would be disinclined to disregard this peak in dummy qualification.) Crash test results showed generally unimodal pelvis Y accelerations, indicating that in vehicle tests, the initial plug crush does not play a significant role in the results.

To determine after what point in time the peak lateral pelvis acceleration should be taken, NHTSA analyzed pelvis lateral acceleration traces for 46 pelvis-acetabulum qualification tests from four dummies and two labs. The data clearly showed multiple, distinct peaks as seen in Figure 2. As mentioned previously, the first main peak and second small ''bump'' in the data are due to the pendulum impacting the pelvis plug and (most likely) the pelvis flesh, respectively. The second major peak (called the ''second peak'' henceforth) represents the response of the dummy after the leg mass comes into play, and is the measure of interest for qualification of the dummy. As the petitioners claimed, the first peak was consistently higher than the second peak. In order to prevent measuring this first, less meaningful peak for qualification, the petitioners recommended that the peak pelvis acceleration value be taken after 5 ms after probe contact with the dummy.

[30] 69 FR at 70961, December 8, 2004.

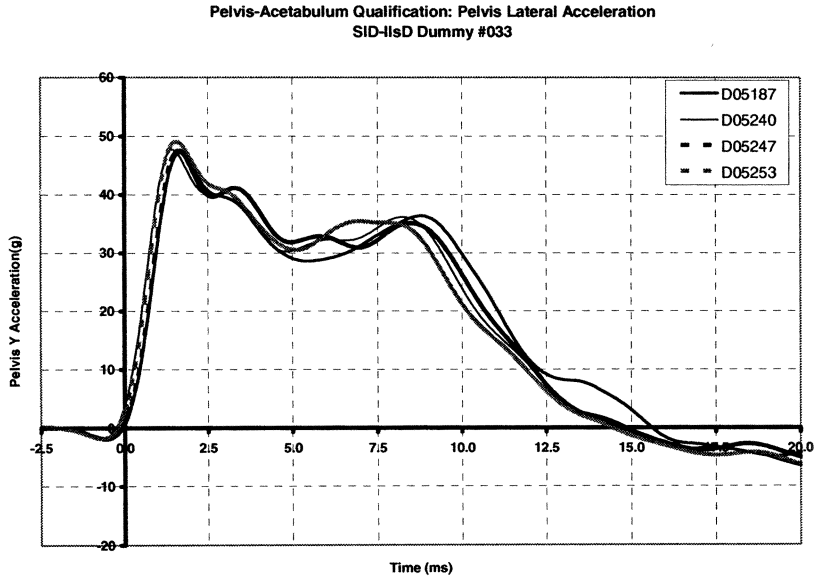

Figure 2: Examples of pelvis-acetabulum, pelvis Y acceleration response traces

It was not clear from the data that 5 ms was the most appropriate time to begin measuring a peak value. For each of these 46 traces, the peak values after 5 ms, 6 ms and 7 ms were obtained in order to determine how much time after probe impact should be disregarded to prevent the first peak from being measured. It was found that in five of the 46 tests, the maximum value after 5 ms was higher than that after 6 or 7 ms, because the value of the decreasing ''first peak'' response at 5 ms was higher than the main dummy response peak value. Four of these 5 instances occurred in Dummy S/N 20, and are seen in Figure 3 below. These cases led the agency to determine that the peak should be taken after 6 ms. However, in two tests, the peak of the main dummy response occurred just before 6 ms (*see* Figure 4), causing the peak after 6 ms to be slightly less than the actual peak. This occurrence was rare, though, and only resulted in an error of approximately 0.1 g for both tests. As a result of this evaluation, this final rule specifies that the peak pelvis lateral acceleration be taken after 6 ms.

Currently, there is no definition for ''time zero'' in the pelvis-acetabulum qualification test procedures (section 572.198(b)). Because of this, the time point ''6 ms'' cannot be defined. Therefore, to implement measuring the pelvis lateral acceleration after 6 ms, the agency is adding a provision to § 572.198(b) that defines time zero. Time zero was defined in the 2006 certification procedures document that was released concurrently with the December 2006 final rule, but there was not a need then to include the definition in the regulatory text of the final rule. Time zero was defined in the 2006 certification procedures document as follows: ''Time zero is defined as the time of contact between the impact probe and the pelvis plug. All channels are at a zero level at this point.'' Since defining time zero is now needed, this final rule adds a section 572.198(b)(11) to the regulatory text that specifies that time zero is defined as the time of contact between the impact probe and the pelvis plug.

BILLING CODE 4910–59–P

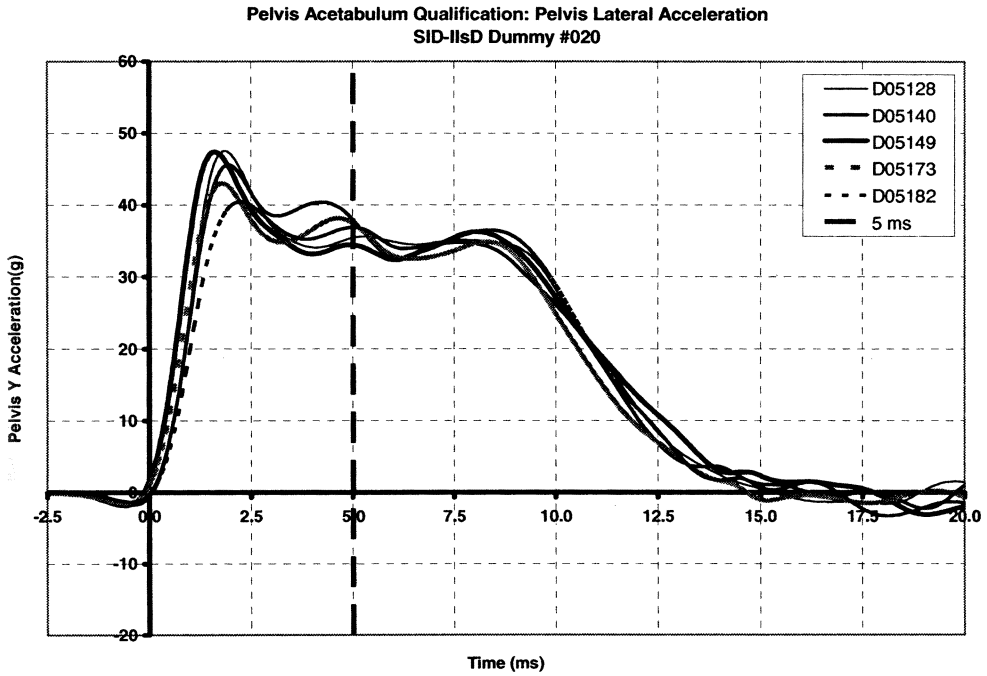

Figure 3: Pelvis Y acceleration traces (with the exception of D05149) with main response peak values lower than the acceleration at 5 ms

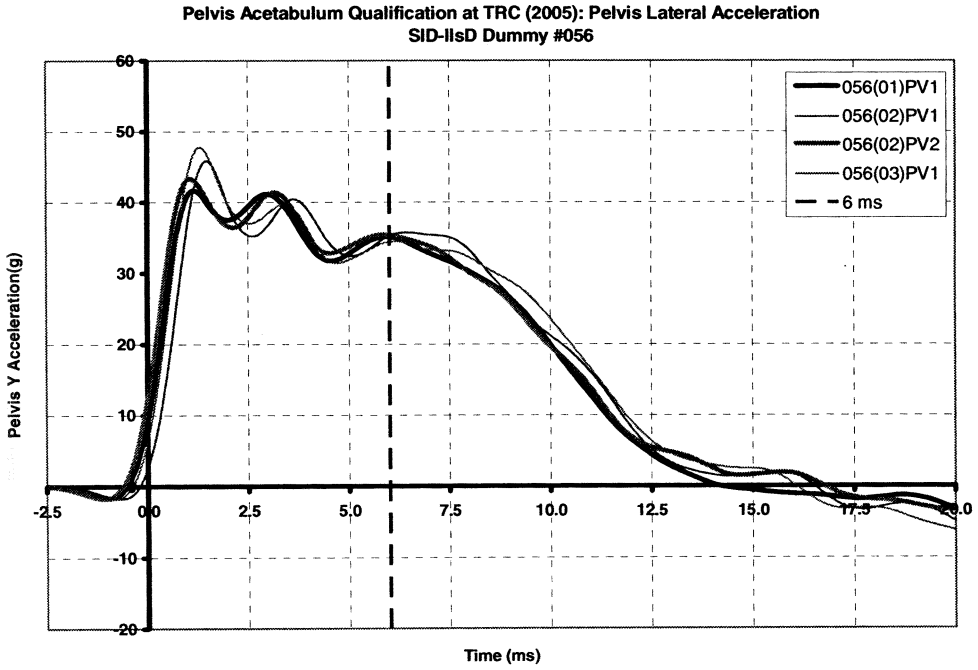

Figure 4: Tests 056(01)PV1 and 056(02)PV2 have main response peaks occurring slightly before 6 ms

VI. Shoulder Qualification Procedures

a. Impact Velocity

The December 14, 2006 final rule specified an impact velocity of 4.4 ±0.1 m/s for the shoulder and abdomen qualification test procedures. The thorax without arm and pelvis iliac tests use an impact velocity of 4.3 ±0.1 m/s.

Requested Change

The Alliance and Denton/SAE DTES recommended that the impact velocity of the shoulder and abdomen qualification procedures be consistent with the thorax without arm and pelvis iliac tests. The Alliance specifically recommended that all the subject tests use an impact velocity of 4.3 ±0.1 m/s to minimize setup errors in conducting qualification tests. It further suggested that the lower speed was more consistent with shoulder rib deflection measurements from NHTSA's FMVSS No. 214 fleet testing program. It found the following average shoulder rib deflections in NHTSA's testing: 32.4 mm for driver in pole tests; 19.3 mm for driver in MDB tests; and 27.9 mm for rear passenger in MDB tests. It also found that the average deflection for qualification tests conducted between 4.2 and 4.4 m/s from FTSS and NHTSA is 33.7 mm, which is greater than average shoulder deflections in the fleet tests and which, the petitioners believed, further supported a reduction in impact velocity for the shoulder qualification test.

Agency Response

We are granting this request. We agree that having the same impact speed for all subject qualification tests would be more convenient than having different speeds. However, because the tests used to support the December 2006 final rule were conducted at 4.4±0.1 m/s, and data submitted in petitions for reconsideration contained tests conducted at 4.4±0.1 m/s, little data existed between 4.2–4.3 m/s. Therefore, to evaluate the petitioners' request, VRTC conducted six shoulder qualification tests, with two tests on each of three dummies, at velocities ranging from 4.20–4.23 m/s. These tests were included with the existing shoulder qualification data, which was then analyzed as two separate data sets: one with tests conducted at impact velocities from 4.2–4.4 m/s and one with tests conducted at 4.3–4.5 m/s. The mean responses in each data set are very similar, as shown in Table 3. However, it is important to note that in looking at Figure 5, the average of the entire 4.4±0.1 m/s data set is close to the average of the responses between only 4.3–4.4 m/s, which make up the majority of the 4.3±0.1 m/s data set. Thus, similarity of means between the 4.4±0.1 m/s and 4.3±0.1 m/s data sets may be partially due to the majority of points in the 4.3±0.1 m/s data set being between 4.3–4.4 m/s.

TABLE 3—STATISTICAL SUMMARY OF SHOULDER QUALIFICATION TEST RESULTS AT 4.3 VS. 4.4 M/S IMPACT VELOCITIES

		Peak probe acceleration	Peak T1 acceleration	Peak shoulder deflection
4.3±0.1 m/s impact velocity	N	67	50	67
	Mean	15.53	19.26	33.33
	SD	0.99	1.19	2.05
	CV	6.40%	6.19%	6.16%
4.4±0.1 m/s impact velocity	N	120	69	120
	Mean	15.79	19.43	33.50
	SD	0.93	1.10	1.61
	CV	5.90%	5.67%	4.81%

Figure 5 shows the peak shoulder deflection responses with respect to the impact speed of the pendulum. It is observed that the peak deflections are noticeably lower at impact speeds of approximately 4.2 m/s. Because of this observation, the qualification performance corridors have been formed with the mindset that the statistical corridor (which is centered at the mean of the data set) may have to be adjusted to accommodate low deflections at the low impact velocities, since the mean of the 4.2–4.4 m/s data set may be slightly high due to the majority of tests being conducted between 4.3–4.4 m/s. The revised corridors are discussed in ''Analysis and Development of SID–IIsD Qualification Specifications in Response to Petitions for Reconsideration (July 1, 2008),'' [31] and in section XI.a of this preamble. We believe that by adjusting the performance corridor to reflect deflection responses at lower impact velocities, the new performance corridor will satisfactorily represent dummy responses over the full range of the revised specified impact velocities.

[31] The document has been placed in the docket for this final rule.

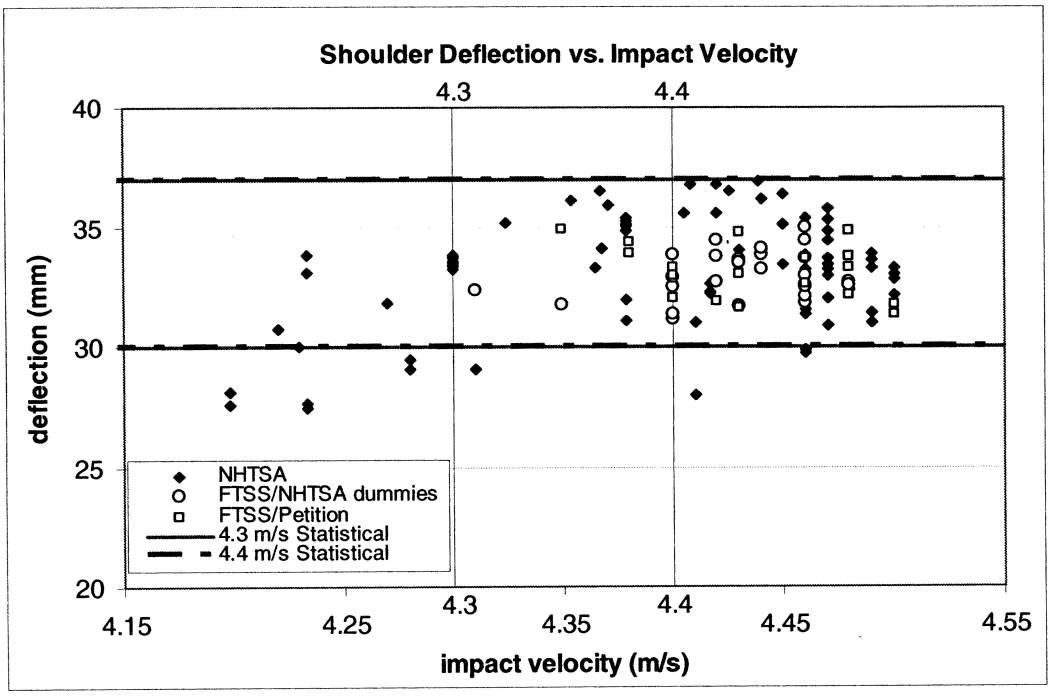

Figure 5: Peak shoulder deflections generated at probe impact velocities of 4.2 – 4.5 m/s

To support its petition, the Alliance also made the argument that the impact velocity should be reduced to 4.3 ±0.1 m/s because the average shoulder deflections in agency crash tests are lower than those resulting from qualification tests. This is true; the average shoulder deflections in agency crash tests were somewhat lower than the average deflections in qualification tests (shown in Table 3). However, we do not agree that it is necessary for the average shoulder deflections in qualification tests to align precisely with the average deflection in crash tests. This is due to the large variations in crash test shoulder deflection measurements [32] as compared to the relative closeness of shoulder deflection responses at a 4.3±0.1 m/s vs. 4.4±0.1 m/s impact velocity. Additionally, the agency usually establishes qualification tests to exercise dummy components at the level of the IARV, not at the level of the average recorded measurement in a crash test. Here, however, since there are no proposed shoulder injury criteria with which to establish a ''target'' deflection for qualification tests, we believe that the deflections obtained at either the 4.3 ±0.1 m/s or 4.4 ±0.1 m/s test speeds are acceptable, given that compared to the variation in shoulder deflections in crash tests, the deflections at 4.3 ±0.1 m/s versus 4.4 ±0.1 m/s are relatively close. Therefore, we are agreeable to reducing the test's impact velocity to 4.3 ±0.1 m/s.

b. Arm Position

The December 14, 2006 final rule (§ 572.194(b)(7)) states, ''Orient the arm to point forward at 90 degrees relative to the interior-superior orientation of the upper torso spine box incline.'' [33]

Requested Change

The Alliance recommended replacing the sentence with, ''Orient the arm forward into the 90 degree detent position.''

Agency Response

This request is denied. It is important for this test that the arm be oriented at the angle as described in the final rule regulatory text. We recognize that the arm would likely be in the same physical location when it is ''in the 90 degree detent position'' as when it is oriented ''to point forward at 90 degrees relative to the inferior-superior orientation of the upper torso spine box incline.'' However, it is possible that the detent could become worn over time, resulting in an arm position that is somewhat off of 90 degrees. Therefore, the arm angle specification will remain as stated in the final rule. Additionally, to make the agency's intent clearer, Figure V4–A is amended such that ''ARM IN 90° DETENT'' is replaced with ''ARM 90° ± 2° RELATIVE TO UPPER TORSO'' and a dashed line indicating the reference line of the upper torso is added. The qualification procedures document is also amended by adding the ±2° tolerance to the specified angle.

Relatedly, we note that the thorax with arm, pelvis acetabulum, and pelvis iliac tests specify that the SID–IIs arm should be oriented so it is in the ''lowest detent.'' We believe this wording could cause confusion, as it may be unclear whether the ''lowest detent'' should place the arm pointing downward or in a direction parallel to the orientation of the upper torso. For this reason, and for consistency with the wording used in the shoulder test, we have made the following changes to the regulatory text. In the thorax with arm test procedure, section 572.195(b)(7), ''Orient the arm downward to the lowest detent'' is changed to ''Orient the arm downward to the lowest detent such that the longitudinal centerline of the arm is

[32] Shoulder deflections in NHTSA crash tests ranged from 4.7–40.7 mm and 15.9–40.4 mm for the driver and passenger (respectively) in MDB tests, and from 8.6–51.2 mm for the driver in FMVSS No. 214 pole tests (NHTSA Fleet Testing for FMVSS 214 Upgrade, MY 2004–2005; test data memorandum in NHTSA Docket No. 2007–29134–003). Additional 32 km/h (20 mph) pole tests conducted on six 2006 and 2007 MY vehicles produced shoulder rib deflections ranging from 18.9–58.4 mm, with an average of 38.0 mm (tests are summarized in Table 1, 73 FR at 32477, and data are available in the NHTSA vehicle crash test database).

[33] There is a typographical error in the final rule regulatory text: the arm position should be measured relative to the ''inferior-superior'' orientation of the upper torso spine box incline. We are correcting this error in this final rule.

parallel to the inferior-superior orientation of the spine box.'' Similarly, in the pelvis-acetabulum test procedure, section 572.198(b)(7), ''Rotate the arm downward to the lowest detent'' is changed to ''Rotate the arm downward to the lowest detent such that the longitudinal centerline of the arm is parallel to the inferior-superior orientation of the spine box.'' In the pelvis-iliac test, section 572.199 does not include arm positioning procedures, but Figure V9–A referenced in this section shows the arm pointing downward and notes that it is in the ''lowest detent.'' For consistency with other test procedures and to clarify arm position, we have added in section 572.199 the following text: ''Orient the arm downward to the lowest detent such that the longitudinal centerline of the arm is parallel to the inferior-superior orientation of the spine box.''

VII. Thorax With Arm Qualification Procedures

a. Peak Impactor Acceleration

The December 14, 2006 final rule (§ 572.195(c)(3)) specified a corridor for the peak acceleration of the impactor.

Requested Change

Petitioners FTSS, the Alliance, and Denton requested that the criterion for peak acceleration of the impactor be limited to all values after 5 ms after time zero. FTSS stated that a review of recent FTSS qualification data shows that 20% of 200 Thorax with Arm impact tests fail if the initial spike (within the first 5 ms) is measured, but only 4% of these same tests fail if the initial acceleration spike is disregarded and the peak acceleration is measured after 5 ms. The petitioner concluded that the initial spike is a result of the initial contact of the probe with the arm and is not a factor when assessing the performance of the ribs. The Alliance also stated that the first peak of the impactor acceleration is due to the inertial response of the arm, which, the petitioner stated, is demonstrated to have greater variability than the response of the thorax (later peak). The Alliance thus recommended a time requirement be added to the performance criteria for the peak impactor acceleration. The Alliance also provided example traces where the inertial peak was both larger and smaller than the peak response of the thorax.

Agency Response

The agency agrees that the peak impactor acceleration should be taken after 5 ms. Data traces from 12 tests at the Transportation Research Center (TRC) were analyzed in the same manner as the pelvis lateral acceleration traces discussed above in this preamble. Unlike the peak pelvis lateral acceleration, however, the first peak of the thorax with arm impactor acceleration is almost always lower than the main response. In fact, in all of these 12 tests, as well as in an additional 11 tests conducted at TRC, 19 at MGA,[34] and in the 25 tests from FTSS that were included in the SAE DTES meeting minutes attached to the Denton petition,[35] the overall peak was after 5 ms. However, given that the petitioners provided evidence that the first peak can be larger than the second, taking the peak impactor acceleration after 5 ms would provide a safeguard against measuring the inertial response. Therefore, the request is granted.

b. Time Zero

As previously discussed for the peak pelvis lateral acceleration in pelvis acetabulum tests, it is necessary to define time zero in the regulatory text for the thorax with arm test. Time zero will be defined as the time of contact between the impact probe and the arm, similar to how the agency has defined time zero elsewhere in this regulation. This definition will be incorporated into section 572.195(b)(11) of the regulatory text.

c. Reported Noise in Potentiometers

The Alliance stated that it observed noise in the data from the half-inch servo potentiometers in the shoulder and thorax-with-arm qualification tests. The SAE DTES meeting minutes reported that drop testing showed clean signals with the potentiometers, so it was not known whether the noise was an electrical problem or a potentiometer problem. The Alliance stated that in some cases, the magnitude of the noise exceeded the magnitude of the primary response and may inadvertently be used as the peak value for comparison to the performance criteria. Data were provided by Denton in Attachments 4 and 5 of the SAE DTES minutes dated January 19, 2007. The petitioners did not recommend a rulemaking action to be taken. The agency analyzed the provided data traces, as well as agency data from thorax-with-arm and shoulder qualification tests, and does not believe there to be a problem with the dummy design. This issue is discussed more fully in the memorandum, ''Analysis of Reported Noise in Potentiometers,'' docketed with this final rule.

VIII. Thorax Without Arm Petitioned Issues

a. Peak Impactor Acceleration

In the December 14, 2006 final rule, § 572.196(c)(3) reads, ''Peak lateral impactor acceleration shall not be less than 14 g and not more than 18 g.''

Requested Change

The Alliance recommended deleting the word ''lateral'' from the term ''peak lateral impactor acceleration.''

Agency Response

This request is granted. The peak impactor acceleration is measured on the long axis of the probe, thus the term ''lateral'' is inappropriate. Section 572.196(c)(3) is changed to state: ''Peak impactor acceleration shall not be * * *,'' as petitioned.

b. Dummy Alignment on the Test Bench

While reviewing the Part 572 regulatory text for the SID–IIsD, the agency found two slight errors in section 572.196(b)(3). The final rule stated: ''Align the outermost portion of the pelvis flesh of the impacted side of the seated dummy tangent to a vertical plane located within 25 mm of the side edge of the bench as shown in Figure V4–A * * *.'' However, as seen in the figures at the end of the subpart, the figure corresponding to the thorax without arm test is Figure V6–A, not V4–A, and the vertical plane for dummy alignment is located within 10 (not 25) mm of the side edge of the bench. The regulatory text is corrected to refer to Figure V6–A and to the 10 mm value.

IX. Abdomen Qualification Procedure

a. Impact Velocity

As previously discussed, the December 14, 2006 final rule specifies an impact velocity of 4.4 ±0.1 m/s for the shoulder and abdomen qualification test procedures. The thorax without arm and pelvis iliac tests use an impact velocity of 4.3 ±0.1 m/s.

Requested Change

The Alliance and Denton/SAE DTES recommended that the impact velocity of the shoulder and abdomen

[34] Overall and ''after 5 ms'' peak accelerations collected at TRC and MGA are included in an agency memo with SID–IIs qualification data (NHTSA–2006–25442–0043) and in the appendix to the report ''Analysis and Development of SID–IIsD Qualification Specifications in Response to Petitions for Reconsideration, (July 1, 2008).'' Additionally, data traces for MGA data are available in crash test reports for pole and MDB crash tests conducted at MGA in support of the FMVSS No. 214 upgrade. Reports are available in NHTSA's vehicle crash database, and test numbers are provided in Docket No. NHTSA–2007–29134–0003.

[35] FTSS was contacted to determine whether the peak probe accelerations were taken after 5 ms. *See* ex parte memorandum, Docket No. NHTSA–2006–25442–0039.

qualification procedures be consistent with the thorax without arm and pelvis iliac tests. The Alliance specifically recommended that all the subject tests use an impact velocity of 4.3 ±0.1 m/s to minimize setup errors in conducting qualification tests. The petitioner also stated that the NPRM proposed an impact velocity of 4.3 ±0.1 m/s and the final rule gave no reason for the increase. The Alliance further stated that NHTSA indicated that the agency will be monitoring the deflections measured by the abdominal ribs and considering for future rulemaking an Injury Assessment Reference Value (IARV) of 45 mm for the ribs. The petitioner stated that in NHTSA's abdominal qualification tests conducted at 4.5 m/s, half of the specimens exceeded 45 mm of deflection in one or both of the abdominal ribs. The Alliance believed that by lowering the impact velocity from 4.4 ±0.1 m/s to 4.3 ±0.1 m/s, the goal of selecting an appropriate impact speed near the magnitude of the research limit is better achieved.

Agency Response

We agree to the petitioners' request. To evaluate the request, we examined the results of the few abdomen tests conducted between 4.2–4.3 m/s prior to the final rule, and the results of new data from VRTC.[36] Using the entire data set, NHTSA re-evaluated the impact velocity responses both at the 4.3±0.1 m/s and 4.4±0.1 m/s impact velocity ranges. A summary of the 4.3 m/s and 4.4 m/s data sets is provided in Table 4. (We must note again, however, that only 13 tests were conducted at impact velocities that produced input energies less than those allowed for the 4.4 ± 0.1 m/s data set. Therefore, the majority of the data in the 4.3 m/s data set is also included in the 4.4 m/s data set.)

TABLE 4—STATISTICAL COMPARISON OF ABDOMINAL QUALIFICATION RESULTS FROM TESTS CONDUCTED AT 4.3±0.1 M/S VS. 4.4±0.1 M/S IMPACT VELOCITY

		Peak probe acceleration (g)	Peak upper rib deflection (mm)	Peak lower rib deflection (mm)	Peak T12 lateral acceleration (g)
4.3 m/s impact velocity	N	64	64	64	64
	Mean	13.97	41.99	39.78	11.71
	SD	0.93	3.00	3.47	1.07
	CV	6.64%	7.15%	8.72%	9.17%
4.4 m/s impact velocity	N	115	115	115	115
	Mean	13.78	43.62	42.10	11.78
	SD	0.90	2.53	2.92	1.07
	CV	6.57%	5.80%	6.95%	9.09%

As shown in Table 4, the mean responses were somewhat lower and more variable at 4.3 ± 0.1 m/s for rib deflection measurements. However, we have accounted for this by lowering and slightly expanding the qualification corridor bounds, as discussed in Section XI.d.

While we have reduced the test's impact velocity, we do not agree with the petitioner's argument that the impact velocity should be reduced because the 4.4 ±0.1 m/s test speed is too severe. We reduced the velocity because the deflections obtained in the 4.3 ±0.1 m/s data set are also close to the proposed IARV, and because we do not anticipate any problems from conducting the test at a slightly lower speed. When looking at abdomen qualification tests with input energies corresponding to impact velocities of 4.4 ±0.1 m/s, approximately 20% of abdominal rib deflections are greater than 45 mm. This percentage drops to about 10.5% for the 4.3 ±0.1 m/s data set. Based on these percentages, we believe that either impact speed would be acceptable in terms of the test's severity compared to the IARV. But, because the test was proposed to be conducted at 4.3 ±0.1 m/s in the NPRM, and because we do not anticipate any problems with reducing the test speed, we are granting the petitioner's request. Details about the qualification data and performance corridors are provided in the report ''Analysis and Development of SID–IIsD Qualification Specifications in Response to Petitions for Reconsideration,'' *supra*, and in section XI of this preamble.

b. Dummy Alignment on the Test Bench

In section 572.197(b)(3), the December 14, 2006 final rule stated: ''Align the outermost portion of the pelvis flesh of the impacted side of the seated dummy tangent to a vertical plane located within 25 mm of the side edge of the bench as shown in Figure V7–A * * *.'' However, as seen in the figure at the end of the subpart, the vertical plane for dummy alignment is located within 10 (not 25) mm of the side edge of the bench. The regulatory text is corrected to refer to the 10 mm value.

X. Other Testing Issues

a. Dummy Clothing

The December 14, 2006 final rule specified that the shoulder, thorax with arm, thorax without arm and abdomen qualification tests be conducted with the dummy wearing its torso jacket (180–3450) and cotton underwear pants. The pelvis-acetabulum and pelvis-iliac tests, however, were to be conducted without the torso jacket and without the cotton underwear pants. The dummy was not to wear shoes for any of the above qualification tests.

Requested Change

The Alliance petitioned that all full-body qualification impact tests be conducted with the torso jacket, cotton underwear pants and shoes installed due to time and effort involved in removing and replacing the dummy's clothes and shoes.

Agency Response

The request is denied. The clothing specifications were put in place to better ensure that accurate and repeatable test measurements could be obtained during dummy qualification. For the pelvis-

[36] Results of tests conducted by VRTC between 4.2 and 4.3 m/s can be found in an agency memorandum providing the revised SID–IIs qualification data set (NHTSA–2006–25442–0043), and in the report ''Analysis and Development of SID–IIsD Qualification Specifications in Response to Petitions for Reconsideration,'' July 1, 2008. Seven additional tests conducted after this memorandum was placed in the docket are included in the appendix of the previously mentioned qualification report.

iliac and pelvis-acetabulum tests, the cotton underwear pants are removed to eliminate the effect that the clothing could have on the measured response. Additionally, removal of the pants simplifies alignment of the probe and better ensures that probe interaction with the dummy is consistent from test to test. The chest jacket must be removed because the ''crotch strip'' (drawing 180–3450, sheet 2 of 3), which is guided through the dummy's legs to attach the front of the jacket to the back of the jacket, can cause the dummy to rock slightly on the test surface. This ''rocking'' can also lead to problems with misalignment of the probe or inconsistent probe interaction with the dummy. Further, removal of the chest jacket is very easy and not burdensome.

The agency considered whether removing or adjusting the crotch strip, while keeping the chest jacket on the dummy, would simplify the test procedure. The agency determined that although it would be possible to conduct the pelvis tests with only the crotch strip removed or adjusted, keeping the jacket on the dummy for the pelvis acetabulum test would make positioning the dummy against the seat back more difficult.

Accordingly, for the reasons provided, the dummy clothing specifications will remain as specified in the final rule.

b. Recovery Time Between Tests

The December 14, 2006 final rule specified a minimum recovery time of 30 minutes between repeat tests of the same qualification test for the neck qualification test. A recovery time of 30 minutes is also given for the shoulder, thorax, abdomen and pelvis-acetabulum qualification tests in the 2006 certification procedures document. The head, which references the procedure given in 49 CFR 572.112(a), is given a recovery time of 2 hours between repeat tests in the December 2006 final rule. The pelvis-iliac test procedure provided in the 2006 certification procedures document specifies a recovery time of 1 hour.

Requested Change

The Alliance petitioned for a minimum recovery time of 30 minutes between repeat tests of the same qualification test for all tests, except for the lateral head drop test, which the petitioner recommended should have a recovery time of 2 hours between repeats of the same qualification test.

Agency Response

The petitioner suggested a change to the final rule's specification of the pelvis-iliac recovery time but did not provide any data or rationale in support of its request. VRTC first conducted quasi-static tests to determine if a 30 minute recovery time, which is common in Hybrid III dummy qualification test procedures, would be sufficient for full recovery of the iliac wing. Because these tests are more controlled than dynamic tests, it is easier to determine if variability in iliac wing response is due to the recovery time, rather than some other factor.

As shown in the report ''SID–IIsD Iliac Wing Studies'' docketed with this final rule, results from quasi-static tests indicated that reducing the iliac recovery time to 30 minutes from 1 hour did not affect the iliac wing responses. However, because quasi-static tests only account for the response of the iliac wing and not the entire pelvis assembly, VRTC also conducted dynamic tests to determine if the pelvis assembly will perform consistently with a recovery time of only 30 minutes. VRTC performed a series of ten iliac qualification tests (using the Material #3 with standoffs wing and a backer plate), where one test was performed on a fully recovered pelvis to serve as a baseline, four tests were conducted after a recovery time of 30 minutes, and five tests were conducted after a recovery time of one hour.

Results from the iliac qualification tests are shown in the ''SID–IIsD Iliac Wing Studies'' report. The results indicated that after successive impacts with 30 minutes or one hour recovery time, the iliac responses from each recovery time showed a trend of slight increase in magnitude. In addition, tests performed with 30 minutes of recovery time between tests showed overall larger magnitude responses than tests with one hour recovery time. Because the iliac wing did not require more than 30 minutes of recovery time according to the quasi-static data, NHTSA determined that this rise in response is probably attributable to the pelvis flesh needing more time for recovery, as the flesh part is a major component of the pelvis that is directly impacted. Since a major element of the pelvis flesh is foam, it appears that the foam needs more than one hour to fully recover from impact. To determine what recovery time would be appropriate, the agency conducted six additional pelvis-iliac qualification tests, with one test conducted as another baseline response from a fully recovered pelvis, and five tests performed with two hours of recovery time between each test. The results of this series did not show a trend of increase in response with successive tests, as shown in the ''SID–IIsD Iliac Wing Studies'' report. Additionally, when comparing the average responses of tests for all recovery times, the responses after two hour recovery times were most similar to those of fully recovered dummy pelves, indicating that after two hours, the pelves have returned to a fully-recovered state (Table 5).

Since the dynamic test results indicate that a 30 minute recovery time is not long enough to ensure full recovery of the dummy's pelvis, and no supporting data were provided by the petitioner, we are denying the Alliance petition. Furthermore, since investigation of this issue revealed that two hours between tests is necessary to ensure the dummy pelvis is fully recovered, we are implementing a two hour recovery time for the pelvis-iliac test. Also, given that the pelvis flesh is also impacted in the pelvis-acetabulum test, the agency believes it is logical to assign a recovery time of two hours for the pelvis-acetabulum test as well.[37] These recovery times, as well as 30 minute recovery times for the shoulder, thorax with arm, thorax without arm and abdomen qualification tests are added to their respective sections in the Part 572 regulatory text.

[37] Qualification corridors for the pelvis iliac and acetabulum tests were determined with data collected after 30 minute recovery times. However, we do not expect this to have an effect on the placement of the corridors for the following reasons. In the pelvis-iliac test, peak impactor acceleration and peak iliac force data from FTSS were generally lower than NHTSA data, resulting in corridors that would easily include lower NHTSA responses, if a longer recovery period would have produced somewhat lower measurements. For the pelvis acceleration performance criterion, some of the NHTSA data is on the low side of corridor; however, the established corridor is already very wide to account for the wide range of responses from NHTSA and FTSS, and it would not be desirable to widen it any further, even if some NHTSA responses would fall slightly below the corridor if a two hour recovery time was implemented. In the pelvis acetabulum test, many of the data came from tests where dummies were impacted once or twice per day, meaning that any rise in response due to repeat tests would probably have a minimal impact on the data set as a whole (and therefore, have a minimal impact on the corridor placement).

TABLE 5—AVERAGE PELVIS-ILIAC QUALIFICATION MEASUREMENTS FOR FULLY, 30 MINUTES, 1 HOUR, AND 2 HOUR RECOVERED DUMMY PELVES

	Average peak probe acceleration (g)	Average peak pelvis Y acceleration (g)	Average peak iliac force (N)
Fully Recovered	43	38	4942
½ hr recovery	45	40	5163
1 hr recovery	44	39	5044
2 hr recovery	43	37	4934

c. Soak Time

The December 14, 2006 final rule (572.200) provides the requirements for instrumentation and test conditions and states at 572.200(j) that ''Performance tests are conducted unless specified otherwise, at any temperature from 20.6 to 22.2 degrees C (69 to 72 degrees F) and at any relative humidity from 10% to 70% after exposure of the dummy to those conditions for a period of 3 hours.''

Requested Change

Denton ATD/SAE DTES stated that the final rule requires a 3 hour soak time instead of the normal 4 hour soak time for all other dummies. It noted that prior temperature studies have shown that even 4 hours might be insufficient. It recommended that NHTSA make the soak time 4 hours to match all other dummies.

Agency Response

This request is granted. This final rule amends 572.200(j) to require a 4 hour soak time to match the requirements of other dummies. We do not believe that requiring an additional hour of soak time will have any negative effect on the dummy's responses. Further, a 4 hour soak time for all test components was specified in the FTSS SID–IIs User Manual (December 4, 2003). The revised qualification procedures document has also been updated to reflect this change.

d. Tolerance on the Impactor Mass

The impactor mass tolerance for the SID–IIsD shoulder, thorax with arm, thorax without arm, abdomen, pelvis acetabulum and pelvis iliac qualification tests is specified in § 572.137(a) in Subpart O of 49 CFR part 572, which sets forth specifications for the Hybrid III 5th percentile adult female test dummy (HIII5F). The impactor mass is specified as ''13.97 ± 0.23 kg (30.8 ±0.05 lbs).'' [38]

Requested Change

The Alliance recommended that the tolerance on the impactor mass for shoulder, thorax with arm, thorax without arm, abdomen, pelvis acetabulum and pelvis iliac qualification tests for the SID–IIs be changed to ±0.023 kg, rather than ±0.23 kg. The SAE DTES supported this requested change.

Agency Response

The request is denied. The agency has evaluated the probe mass tolerances specified for other Part 572 crash test dummies. Table 6 displays the results of this evaluation.

TABLE 6—IMPACT PROBE MASSES AND TOLERANCES FOR DUMMIES SPECIFIED IN 49 CFR PART 572

Part 572 subpart & dummy name	Probe type	Probe metric/english specification and tolerance	Tolerance percentage of specified probe mass/weight
Subpart N, Six-year-old Child Test Dummy, Beta Version.	Thorax	2.86±0.02 kg (6.3±0.05 lb)	0.70 (.79)
Subpart N, Six-year-old Child Test Dummy, Beta Version.	Knee	0.82±0.02 kg (1.8±0.05 lb)	2.44 (2.78)
Subpart P, HIII 3-Year-Old Child Crash Test Dummy, Alpha Version.	Thorax	1.70±0.02 kg (3.75±0.05 lb)	1.18 (1.33)
Subpart V, SID–IIs Side Impact Crash Test Dummy (refers to Subpart O, HIII5F).	Thorax/Abdomen/Iliac (for HIII5F, Thorax).	13.97±0.23 kg (30.8±0.05 lb) *tolerances not equivalent	1.65 (0.162)
Petitioned SID–IIs/HIII5F probe mass tolerance.	Thorax/Abdomen/Iliac (for HIII5F, Thorax).	13.97±0.023 kg	0.164

The petitioner's request to change the mass tolerance to 0.023 kg would result in a tolerance that is similar to the 3-year-old and 6-year-old dummy probe tolerances (0.02 kg). However, 0.02 kg is 0.70% to 2.44% of the mass of the child dummy probes. Because the SID–IIs/HIII5F probe mass is larger than those for the child dummies, the requested 0.023 kg tolerance is only 0.16% of the probe mass for the 5th percentile adult female dummies, which is a very tight tolerance for the larger probe. The current mass tolerance of 0.23 kg is more consistent with child dummy probe mass tolerances in terms of the *percentage* of the probe mass (0.23 kg is 1.65% of the SID–IIs/HIII5F probe mass). Further, although it is possible for the probes to be produced to a tight tolerance of 0.16%, several labs, including those at VRTC, TRC, MGA and GM, would not meet the mass specification with this lower tolerance for all probes (Table 7). Under a 0.23 kg tolerance, the VRTC and TRC probe masses would meet specifications and

[38] There was an incorrect conversion in § 572.137(a) between the metric and English tolerance. The ''0.05 lbs'' should read ''0.5 lbs.'' This error is corrected by today's final rule. We have also corrected the tolerance for the HIII–5F knee probe in 572.137(b) to be 2.99±0.23 kg (6.6±0.5 lbs).

the MGA probes would be only slightly outside the allowable range. Because data showing a need to change the tolerance of 0.23 kg to 0.023 kg has not been shown, the agency is denying the request.

TABLE 7—SID–IIsD IMPACT PROBE MASSES AT VARIOUS LABORATORIES

Lab	Probe mass	Meets 0.23 kg tolerance?	Meets 0.023 kg tolerance?
MGA	14.22 kg (all)	NO	NO.
TRC (before 5/4/07)	13.97 kg (all)	YES	YES.
TRC (5/4/07–present)	13.94 kg (sh/thx/acet)	YES	NO.
	13.96 kg (abd and iliac)	YES	YES.
VRTC	14.1195 kg (sh/thx/acet); 14.1014 kg (abd); 14.1558 kg (iliac).	YES	NO.
FTSS	13.950 kg (sh/thx/acet); 13.972 kg (abd); 13.955 kg (iliac).	YES	YES.
GM	14.302 kg (abdomen)	NO	NO.

e. Neck Cable Torque in PADI

In the ''Procedures for Assembly, Disassembly, and Inspection (PADI) of the SID–IIsD Side Impact Crash Test Dummy'' [39] incorporated by reference by the December 14, 2006 final rule, a torque of 10–12 in-lb is required for the neck cable jam nut.

Requested Change

Denton/SAE DTES suggested that since the SID–IIs neck is the same as that of the HIII5F, the neck cable jam nut torque specification should be changed to 12±2 in-lb to match the HIII5F.

Agency Response

This request is denied. The petitioner did not provide any neck qualification data to support its recommendation. To evaluate the request, VRTC conducted neck qualification tests with neck cable torques of 12 and 14 in-lb to determine the effect of increased cable torque on neck response. The results of these tests are presented and explained in a memorandum entitled, ''Results of Neck Cable Torque Investigation,'' which has been placed in the agency's docket for today's final rule. The results indicated that one out of three tests on one neck and two out of three tests on a second neck tested with a cable torque of 14 in-lb failed the neck qualification test (specifically, the peak OC moment was higher than allowed by the performance criteria). In contrast, all six tests with a neck cable torque of 12 in-lb and meeting pendulum deceleration requirements passed the neck qualification test. Data from the forward and headform potentiometers indicated that the tests conducted with a cable torque of 14 in-lb produced a lower peak rotation than those conducted at 12 in-lb., i.e., the higher cable torque appears to cause a slightly stiffer neck response. Although the difference in response is small, at this higher torque laboratories may experience difficulty in passing the neck qualification test performance criteria, especially if the neck is somewhat stiff, as the performance corridors were formed using necks with cable torques of 10–12 in-lb. Accordingly, the agency has decided against changing the neck cable torque specification in the PADI.

f. Pendulum Deceleration Pulse

The December 14, 2006 final rule (572.193(c)) specifies that the pendulum deceleration pulse is characterized in terms of decrease in velocity as obtained by integrating the pendulum acceleration output from time zero. In an interpretation request received by NHTSA on May 21, 2008, FTSS asked about the time measurement at >25.0 and <100 milliseconds (ms). FTSS asked whether the requirement is to record the singular peak value of the Pendulum Delta-V, or whether the Pendulum Delta-V must fall between −5.50 to −6.20 meters per second throughout the time period.

Agency Response

We have clarified the table in 572.193(c)(1) such that the specified pendulum delta V for 25–100 ms applies to the peak velocity in that time period. We believe that there is no need to record the pendulum Delta-V over the range, as once the pendulum acceleration stops, the pendulum Delta-V becomes relatively constant, reaching an overall peak just after 25 ms and slightly decreasing in magnitude after that. Further, the peak may be easier to tune than the whole range.

g. Neck Potentiometers

The December 14, 2006 final rule (572.193) specifies the neck assembly qualification tests. The test procedure calls for the attachment of the neck-headform assembly in accordance with Figure V2–A or V2–B (depending on the direction of impact) of the Appendix of the subpart. These figures show the use of three angle potentiometer assemblies for measuring the maximum translation-rotation of the midsagittal plane of the headform disk.

Requested Change

Since only two potentiometers (''pots'') are used for the measurement requirements of the neck qualification test, Denton/SAE DTES inquired about either eliminating the third pot (the aft/inner angle pot assembly shown in Figures V2–A, –B, –C) or making it optional, and including a spacer mass in its place.

Agency Response

We do not agree to this change. Denton/SAE DTES is correct that only the fore/outer angle potentiometer assembly and the headform angle potentiometer assembly are used to calculate the maximum translation/rotation of the headform. However, the aft/inner potentiometer assembly has been installed throughout the development of the dummy and neck performance corridors, as use of this assembly was originally specified in the FTSS SID–IIs user's manual. The agency has not conducted any tests without this potentiometer assembly, and no data of this kind were provided to support removing the third pot. Therefore, it is unknown how removal of this assembly will affect the overall response characteristics of the neck during this test. In order to obtain neck qualification results consistent with those that have been derived using all three potentiometers, the aft/inner angle pot assembly cannot be eliminated without compensating for the absent part. The petitioner has not provided a replacement part that can achieve this end result.

[39] NHTSA Docket NHTSA–2006–25442–14, page 19.

XI. Qualification Performance Corridors

In response to the final rule, the petitioners provided additional qualification data and recommendations for revised performance corridors. To the extent possible, NHTSA incorporated the data that had been acquired in tests conducted according to the final rule test procedures, or to the procedures amended today, as appropriate, into the NHTSA data set.[40] To provide as extensive and variable a data set as possible, the agency also added to this data set tests performed at TRC that had been overlooked at the time of the final rule, tests conducted at TRC following the publication of the final rule, and shoulder, abdomen, and pelvis iliac qualification tests conducted at VRTC in support of the agency's evaluation of the petitions for reconsideration. Additionally, the ''time-of-purchase'' qualification test results performed at FTSS on dummies purchased by the agency for research or compliance purposes were added.

However, some data from these sources were not used because the agency was not confident that the tests were conducted under the appropriate test procedures and conditions. The details of test removal are described in the report, ''Analysis and Development of SID–IIsD Qualification Specifications in Response to Petitions for Reconsideration,'' *supra.* As discussed in that document, qualification tests were removed for the following reasons: Impact energy did not fall within the allowable range (see discussion below); the time history trace showed unusual behavior; or the test was improperly conducted.

With regard to impact energy, during NHTSA's examination of the December 2006 final rule data set, the agency found that many of the probe acceleration values were calculated from probe force values using an assumed probe mass of 13.97 kg. To obtain more precise acceleration values with which to form performance corridors, the agency requested information about probe masses from the test labs that had provided probe force rather than acceleration data. We found that the probe masses used at some test laboratories were greater than allowed by the probe mass tolerance specified in 572.137(a). To account for these higher probe masses, we calculated the allowable impact energy range using the specified tolerances for mass and velocity and the impact energy of each individual test (where Energy = $\frac{1}{2}mv^2$). We removed from the data set tests with impact energies that did not meet the allowable range. This process of ''filtering'' tests by impact energy rather than impact velocity was performed only for the purpose of evaluating the performance criteria. When a test lab conducts the Part 572 tests specified in subpart V, we expect them to ensure that the probe mass and impact velocity requirements specified in subpart V are met.

We considered several other factors in responding to the petitions pertaining to the revision of the performance corridors. Performance corridors are generally based on the mean, standard deviation (SD), and coefficient of variation (CV) of the data set. Bounds are preliminarily set at a certain distance from the mean value, depending on the CV. Corridor bounds are initially set based on the CV of the data set as follows: for CV less than 3%, the bounds are set at ±3 standard deviations (SD) from the mean; for CV between 3% and 5%, ±2 SD from the mean; for CV greater than 5%, ±10% from the mean. After setting a preliminary corridor based on the CV, the bounds are rounded to the next whole number away from the mean to obtain the ''statistically-derived'' corridor. Either bound could then be adjusted slightly to account for outside data points, if warranted (71 FR at 75360). In its petition for reconsideration, Denton/SAE DTES recommended that ±3 standard deviations (such that ~99% of the available data would be included) be used to create corridors instead of ±2 standard deviations (which includes only ~95% of the available data) because, the petitioner believed, there was limited data accounting for lab-to-lab and technician-to-technician variability to create acceptable corridors that would accommodate this expected level of variation.

We have considered Denton's request but have decided against its recommendation. Use of the NHTSA guidelines for setting performance corridors better ensures that the corridor width is appropriate for the variation in the data set, because the width of each corridor is based on the CV of the data. Forming corridors according to ±3 standard deviations from the mean can result in corridors that provide an unnecessary ''buffer zone'' around the data, and allow for too large a range of responses. Performance corridors must be constrictive enough to identify and disqualify dummies whose responses fall significantly away from the mean.

Further, the petitioner made the suggestion about using a corridor width of ±3 standard deviations out of concern about the limited variability in the data. The revised data set adopted today in response to the petitions for reconsideration incorporates all the relevant test results that have been made available and represents five laboratories and a much larger sample of dummies than the December 2006 final rule data set, which represented two laboratories and four dummies for all tests but the iliac test (which represented four dummies and one laboratory).[41] We believe this expanded data source is sufficient to capture the behavior of the majority of dummies tested at different labs.

Another factor we considered in responding to the petitions pertaining to the performance corridors related to the use of rounded integers by NHTSA in developing the corridors of the December 14, 2006 final rule. NHTSA published a final report ''Development of Certification Performance Specifications for the SID–IIsD Crash Test Dummy,'' [42] in the establishment of qualification corridors. The report included tabulated data, as well as plots of the adopted corridors. In its petition for reconsideration, Denton/SAE DTES noted that many of the data presented in this report appear to be rounded to even integers for the T1 acceleration in the thorax without arm test.

We reviewed the data in response to the petition and have observed that rounded integers were used. To improve the data tables, we have replaced the rounded values for T1 acceleration and other thorax without arm qualification test measurements, as well as measurements in other tests such as shoulder, abdomen, *etc.,* with more precise values obtained from NHTSA crash test reports, supporting reports for the SID–IIsD final rule,[43] and electronic data (as available). The improved data were used to evaluate the performance criteria for the thorax without arm and

[40] As noted earlier, the Alliance data provided as part of their petition for reconsideration was considered in the formation of recommended corridors but was not incorporated into the NHTSA data set for inclusion in the statistical analyses.

[41] The shoulder test had samples of 13 different dummies; the thorax with and without arm tests had samples of at least 29–30 different dummies; the abdomen test had samples of 10 different dummies; the pelvis acetabulum test had a sample of 18 different dummies; and the pelvis iliac test used 48 different iliac wings and 6 pelvis skins.

[42] Available in Docket No. NHTSA–2006–25442–16.

[43] Data were obtained from the following reports: (a)''Certification and Maintenance Records of the SID–IIs Build Level D Dummies Used in NHTSA Rulemaking Support Tests, May 2005 through November 2005,'' NHTSA Office of Vehicle Safety Research, February 2006, Docket No. 25442–5; (b) ''Repeatability and Reproducibility Analysis of the SID–IIs Build Level D Dummy in the Certification Test Environment,'' Jessica Gall, MGA Research Corporation, September 2005, Docket No. 25442–6.

all other qualification tests. The revised tables are shown in the report, ''Analysis and Development of SID–IIsD Qualification Specifications in Response to Petitions for Reconsideration,'' *supra.*

Table 8 shows the whole-body qualification tests conducted in each body region that are available for corridor formation. However, note that for some measurements within each test, responses are not present or not applicable.[44]

TABLE 8—TOTAL NUMBER OF QUALIFICATION TESTS USED TO FORM QUALIFICATION CORRIDORS

Test performer	Shoulder (4.3 m/s)	Thorax w/ arm	Thorax w/o arm	Abdomen (4.3 m/s)	Pelvis-Acetabulum	Pelvis-Iliac
NHTSA—final rule data set	26	48	51	23	46	.....
NHTSA—newly added data	15	11	11	16	15	123
FTSS with NHTSA R&D/Compliance dummies	14	28	28	7	56	.....
FTSS—petition for reconsideration	12	25	25	16	.....	83
GM—Denton/SAE DTES petition for reconsideration	.....	.....	.....	2	.....	206
Total	*67	**112	115	64	†117	155

*50 measurements were available for the peak upper spine (T1) acceleration.
**66 measurements were available for the peak impactor acceleration after 5 ms.
†61 measurements were available for the peak pelvis lateral acceleration after 6 ms.

a. Shoulder Qualification Corridors

The December 14, 2006 final rule (572.194) specified a shoulder qualification procedure where, for a specified impact velocity, performance corridors were set for: peak shoulder rib deflection, peak lateral acceleration of the upper spine (T1), and peak impactor acceleration. The values are shown in Table 9.

Requested Change

The Alliance, FTSS and Denton/SAE DTES petitioned for changes to these qualification corridors. The Alliance recommended a corridor that is ±2 s.d. from the mean of the data pooled from FTSS and NHTSA. In accordance with its recommendation that the impact speed for the test be reduced to 4.3 ±0.1 m/s, the Alliance excluded tests with an impact speed greater than 4.4 m/s in their January 2007 petition, however, in their December 2007 petition, they provided data for tests conducted with an impact velocity of 4.4±0.1 m/s. FTSS created corridors based on a 4.4 ±0.1 m/s impact speed. It pooled data from FTSS and NHTSA and created corridors using the NHTSA procedure. Denton/SAE DTES created corridors based on a 4.4 ±0.1 m/s impact speed. It pooled data from FTSS, NHTSA, MGA and TRC and created corridors at ±3 s.d. from the mean. It was not clear from Denton if any test data was excluded from the data pool based on impact speed. The petitioners' recommended corridors are set forth in Table 9.

TABLE 9—COMPARISON OF PETITIONED SHOULDER QUALIFICATION CORRIDORS

Shoulder qualification test	December 14, 2006 final rule corridor	Petitioned recommendations			
		Alliance—January 2007	Alliance—December 2007	FTSS	Denton/SAE DTES
Impact Velocity (m/s)	4.3–4.5	4.2–4.4	Same as FR	Same as FR	Same as FR.
Peak Shoulder Rib Deflection (mm)	30–37	31–37	.....	Same as FR	29–38.
Peak Upper Spine Lateral Accel. (g)	17–19	16–22	17–22	17–21	15–23.
Peak Impactor Acceleration (g)	14–18	14–17	.....	Same as FR	13–19.

Agency Response

As discussed earlier in this preamble, the agency decided to lower the impact velocity to 4.3 ±0.1 m/s for the shoulder qualification test. Therefore, only tests conducted within the energy range corresponding to this impact velocity range were used to establish new performance corridors. Performance corridors for the shoulder were formed following the method described earlier, using the mean, SD, and CV of the data set and setting bounds at a certain distance from the mean value, depending on the CV. The report ''Analysis and Development of SID–IIsD Qualification Specifications in Response to Petitions for Reconsideration'' provides the statistics of the data and compares the corridors established in this rule to the petitioners' recommendations. For the peak upper spine lateral acceleration and the peak impactor acceleration, the statistically-derived corridors provided in Table 10 were adopted. The lower bound of the peak shoulder rib deflection corridor was expanded by 2 mm to account for expected lower deflections at impact velocities from 4.2–4.3 m/s. The corridors established in this final rule are in agreement with or slightly larger than those proposed by the Alliance (December 2007) and FTSS, and the shoulder deflection and impactor acceleration corridors are close to those

[44] For each test, multiple dummy measurements are taken to check whether the dummy meets the performance criteria. But, in some tests, one or more measurements might not have been collected, or might have been removed. For example, in the table there are 120 shoulder tests, but as indicated in the footnote to the table, there were only 69 T1 acceleration measurements. Sometimes there is only one measurement missing, *e.g.,* one of the upper rib deflection values was deleted from the thorax with arm data set because the recorded value was a late spike. So, even though the table indicates that there are 112 thorax with arm tests, there are not 112 upper rib deflection measurements. The number of measurements used for forming each performance corridor are provided in the report ''Analysis and Development of SID–IIsD Qualification Specifications in Response to Petitions for Reconsideration,'' July 1, 2008.

recommended by Denton/SAE DTES. Although peak upper spine lateral acceleration corridor is somewhat narrower than that suggested by Denton/SAE DTES, we feel that it sufficiently includes the data and should not be made wider. The final corridors are shown in Table 10.

TABLE 10—SHOULDER QUALIFICATION CORRIDORS

Shoulder qualification measurement	December 14, 2006 corridor	Statistical corridor	Today's final rule corridor
Peak Shoulder Rib Deflection (mm)	30–37	30–37	28–37
Peak Upper Spine Lateral Accel. (g)	17–19	17–22	17–22
Peak Impactor Acceleration (g)	14–18	13–18	13–18

b. Thorax with Arm Qualification Corridors

The December 14, 2006 final rule (572.195) specified a thorax with arm qualification test involving the measurement of seven dummy responses: Peak shoulder rib deflection, peak thoracic rib deflections for the upper, middle, and lower ribs, peak upper and lower spine lateral accelerations, and peak impactor acceleration.

Requested Change

The Alliance and Denton/SAE DTES petitioned for changes to these qualification corridors. As discussed earlier in this preamble, these petitioners, as well as FTSS, had requested that the peak impactor acceleration be taken after 5 ms to avoid measurement of an inertial peak. The Alliance and Denton/SAE DTES recommended new corridors based on their analyses of the NHTSA final rule data set plus additional tests conducted by FTSS, accounting for the 5 ms limit. Denton/SAE DTES also suggested that corridors should be formed based on ±3 standard deviations rather than ±2 standard deviations from the mean because, the petitioner believed, data from very few labs are available to provide sufficient lab-to-lab variation in the data set. Table 11 provides a summary of petitioner-recommended corridors.

TABLE 11—COMPARISON OF PETITIONED THORAX WITH ARM QUALIFICATION CORRIDORS

Thorax with arm qualification test	December 14, 2006 final rule corridor	Petitioned recommendations			
		Alliance—January 2007	Alliance—December 2007	FTSS	Denton/SAE DTES
Impact Velocity (m/s)	6.6–6.8	Same as FR	.....	Same as FR	Same as FR.
Peak Shoulder Rib Deflection (mm)	31–40	30–41	.....	Same as FR	27–44.
Peak Upper Thorax Rib Deflection (mm)	26–32	25–32	.....	Same as FR	24–33.
Peak Middle Thorax Rib Deflection (mm)	30–36	30–35	.....	Same as FR	29–36.
Peak Lower Thorax Rib Deflection (mm)	32–38	Same as FR	.....	Same as FR	31–39.
Peak Upper Spine Lateral Accel. (g)	34–43	34–44	.....	Same as FR	32–46.
Peak Lower Spine Lateral Accel. (g)	28–35	28–36	30–37	Same as FR	26–38.
Peak Impactor Acceleration after 5 ms (g)	31–36	Same as FR	30–36 †	Same as FR	30–37.

† Conditions were not provided, but it is assumed that peaks were taken after 5 ms.

Agency Response

The mean, standard deviation, and CV of the expanded data set were used to generate performance corridors for the thorax with arm qualification test as described in ''Analysis and Development of SID–IIsD Qualification Specifications in Response to Petitions for Reconsideration.'' Following statistical analysis and visual examination of the data, only three corridors were changed from those given in the December 2006 final rule: The peak upper thorax rib deflection, the peak lower spine lateral acceleration, and the peak impactor acceleration (after 5 ms). The upper thorax rib deflection and impactor acceleration corridors were changed to agree with the statistically-derived corridors, which are also in agreement with (or slightly larger than) the corridors recommended by the Alliance and FTSS. The lower spine acceleration corridor was expanded slightly from the statistically-formed corridor to better include the spread of the data. The rest of the performance criteria were unchanged, due to the fact that the December 2006 final rule corridor sufficiently contained the data and was in agreement with, or slightly larger than, the statistically-derived corridor. The final corridors are shown in Table 12.

TABLE 12—THORAX WITH ARM QUALIFICATION CORRIDORS

Thorax with arm qualification measurement	December 14, 2006 Corridor	Statistical Corridor	Today's Final Rule Corridor
Peak Shoulder Rib Deflection (mm)	31–40	32–40	31–40
Peak Upper Thorax Rib Deflection (mm)	26–32	25–32	25–32
Peak Middle Thorax Rib Deflection (mm)	30–36	30–35	30–36
Peak Lower Thorax Rib Deflection (mm)	32–38	32–38	32–38
Peak Upper Spine Lateral Accel. (g)	34–43	34–43	34–43
Peak Lower Spine Lateral Accel. (g)	28–35	29–36	29–37
Peak Impactor Acceleration (g)	31–36	N/A	N/A

TABLE 12—THORAX WITH ARM QUALIFICATION CORRIDORS—Continued

Thorax with arm qualification measurement	December 14, 2006 Corridor	Statistical Corridor	Today's Final Rule Corridor
Peak Impactor Acceleration after 5 ms (g)	N/A	30–36	30–36

c. Thorax without Arm Qualification Corridors

The December 14, 2006 final rule (572.196) specified a thorax without arm qualification procedure in which, for a specified impact velocity, performance corridors were set for: peak upper thorax rib deflection, peak middle thorax rib deflection, peak lower thorax rib deflection, peak upper spine lateral acceleration, peak lower spine lateral acceleration, and peak impactor acceleration.

Requested Change

The Alliance, FTSS and Denton/SAE DTES petitioned for changes to these qualification corridors. The Alliance pooled data from FTSS and NHTSA and created corridors using ±2 s.d. from the mean. FTSS pooled data from FTSS and NHTSA and created corridors using NHTSA's procedure (based on the mean, SD, and CV of the data set), except the method used to create the T12 corridor used ±2 s.d. instead of 10%, as the petitioner believed it was more appropriate due to the fact that this acceleration has a low magnitude in this test. Denton/SAE DTES pooled data from FTSS, NHTSA, MGA and TRC to create corridors using ±3 s.d. from the mean. The corridor recommendations are summarized in Table 13.

TABLE 13—COMPARISON OF PETITIONED THORAX WITHOUT ARM QUALIFICATION CORRIDORS

Thorax without arm qualification test	December 14, 2006 final rule corridor	Petitioned recommendations		
		Alliance—January 2007	FTSS	Denton/SAE DTES
Impact Velocity (m/s)	4.2–4.4	Same as FR	Same as FR	Same as FR
Peak Upper Thorax Rib Deflection (mm)	33–40	Same as FR	Same as FR	31–41
Peak Middle Thorax Rib Deflection (mm)	39–45	39–44	Same as FR	37–45
Peak Lower Thorax Rib Deflection (mm)	36–43	Same as FR	Same as FR	34–44
Peak Upper Spine Lateral Accel. (g)	14–17	Same as FR	Same as FR	13–17
Peak Lower Spine Lateral Accel. (g)	7–10	7–11	7–11	6–12
Peak Impactor Acceleration (g)	14–18	15–18	Same as FR	Same as FR

Agency Response

Based on an impact velocity of 4.3±0.1 m/s, the performance corridors were formed based on the statistics of the expanded data set (*see,* ''Analysis and Development of SID–IIsD Qualification Specifications in Response to Petitions for Reconsideration''). Four of the thorax without arm performance criteria are changed in this final rule. Two of these, the peak upper thorax rib deflection and the peak upper spine lateral acceleration, were expanded slightly, in agreement with the statistically-derived corridor from the new data set. The peak lower thorax rib deflection corridor was expanded beyond the statistically-derived corridor because the statistical corridor excluded data that met the final rule corridor. As indicated by FTSS, the magnitude of the peak lower spine acceleration is fairly low. Therefore, we agree with the petitioner that applying a corridor of ±10% would be inappropriate, and have instead set this corridor to agree with the Alliance and FTSS recommendations. The statistical and adopted qualification corridors are as shown in Table 14.

TABLE 14—THORAX WITHOUT ARM CORRIDORS

Thorax without arm qualification measurement	December 14, 2006 corridor	Statistical corridor	Today's final rule corridor
Peak Upper Thorax Rib Deflection (mm)	33–40	32–40	32–40
Peak Middle Thorax Rib Deflection (mm)	39–45	37–45	39–45
Peak Lower Thorax Rib Deflection (mm)	36–43	35–42	35–43
Peak Upper Spine Lateral Accel. (g)	14–17	13–17	13–17
Peak Lower Spine Lateral Accel. (g)	7–10	8–11	7–11
Peak Impactor Acceleration (g)	14–18	14–18	14–18

d. Abdomen Qualification Corridors

The December 14, 2006 final rule (572.197) specified an abdomen qualification procedure in which, for a specified impact velocity, performance corridors were set for: Peak upper abdominal rib deflection, peak lower abdominal rib deflection, peak lower spine lateral acceleration, and peak impactor acceleration.

Requested Change

The Alliance, FTSS and Denton/SAE DTES petitioned for changes to these qualification corridors, based on their analyses of larger data sets as described below. Table 15 presents the petitioned corridors.

The Alliance recommended a corridor that is ±2 s.d. from the mean of pooled data from FTSS and NHTSA and excluded data from tests conducted at speeds greater than 4.4 m/s in their January 2007 petition, but used an impact velocity range of 4.4 ±0.1 m/s in

their December 2007 petition. FTSS pooled data from FTSS, NHTSA and GM, based on 4.4 ±0.1 m/s impact speed. It created corridors using the NHTSA procedure, except the T12 corridor was created using ±2 s.d. instead of 10%. Denton/SAE DTES created corridors using ±3 s.d. from the mean of 4.4 ±0.1 m/s impact data pooled from FTSS, NHTSA, MGA and TRC.

TABLE 15—COMPARISON OF PETITIONED ABDOMEN QUALIFICATION CORRIDORS

Abdomen qualification test	December 14, 2006 final rule corridor	Petitioned recommendations			
		Alliance—January 2007	Alliance—December 2007	FTSS	Denton/SAE DTES
Impact Velocity (m/s)	4.3–4.5	4.2–4.4	Same as FR	Same as FR	Same as FR
Peak Upper Abdominal Rib Deflection (mm)	39–47	37–50	37–49	Same as FR	36–51
Peak Lower Abdominal Rib Deflection (mm)	37–46	35–49	35–49	Same as FR	33–53
Peak Lower Spine Lateral Accel. (g)	11–14	9–15	9–14	9–14	9–15
Peak Impactor Acceleration (g)	12–16	Same as FR	Same as FR	Same as FR	11–16

Agency Response

As discussed previously, NHTSA is reducing the impact velocity to 4.3 ±0.1 m/s. Accordingly, the performance corridors were formed using only those tests with input energies corresponding to impact velocities of 4.3 ±0.1 m/s. The report ''Analysis and Development of SID–IIsD Qualification Specifications in Response to Petitions for Reconsideration'' describes the statistics and rationale used for the placement of corridor bounds, and provides figures showing the responses for each qualification measurement. In this qualification test, both rib deflection criteria were expanded and/or shifted downward slightly from the final rule corridors. The statistical corridors for these measurements were formed using the NHTSA method and the 4.3 ±0.1 m/s data set. However, due to low deflection responses at impact velocities from 4.2—4.3 m/s, the lower bound of the upper rib deflection statistical corridor was reduced 1 mm, and the lower bound of the lower rib deflection statistical corridor was reduced 2 mm. These corridors are narrower than those suggested by the Alliance and Denton/SAE DTES, but we believe they contain the data sufficiently well. The peak lower spine acceleration corridor was set by placing the bounds at ±2 s.d. from the mean, rather than ±10% from the mean as specified by the NHTSA method for corridor formation. Like in the thorax with arm test, this is because the low magnitude of this measurement results in a narrow corridor when its bounds are placed at ±10% of the mean, so it is more appropriate to set the corridor bounds at ±2 s.d. from the mean. The final corridors are shown in Table 16.

TABLE 16—ABDOMEN QUALIFICATION CORRIDOR

Abdomen qualification measurement	December 14, 2006 corridor	Statistical corridor	Today's final rule corridor
Impact Velocity (m/s)	4.3–4.5		4.2–4.4
Peak Upper Abdominal Rib Deflection (mm)	39–47	37–47	36–47
Peak Lower Abdominal Rib Deflection (mm)	37–46	35–44	33–44
Peak Lower Spine Lateral Accel. (g)	11–14	10–13	9–14
Peak Impactor Acceleration (g)	12–16	12–16	12–16

e. Pelvis Acetabulum Qualification Corridors

The December 14, 2006 final rule (572.198) specified a pelvis acetabulum qualification procedure where for a given impact velocity, performance corridors were set for: peak impactor acceleration, peak lateral pelvis acceleration, and peak acetabulum force.

Requested Change

The Alliance, FTSS and Denton/SAE DTES requested changes to the pelvis acetabulum qualification corridors with the condition that the peak lateral pelvis acceleration be taken 5 ms or more after the impactor contacts the dummy. The Alliance separately analyzed data from tests with 2 mm and 3 mm pre-crushed plugs. It recommended a corridor width of ±2 s.d., regardless of which pre-crush amount is used. FTSS pooled data from FTSS, Ford and NHTSA with 2 mm and 3 mm pre-crushed plugs combined. It created corridors using the NHTSA procedure described in section XI of this preamble. Denton/SAE DTES also analyzed combined data from 2 mm and 3 mm pre-crushed plugs. It created corridors using ±3 s.d. from the mean of pooled data from FTSS, Ford and NHTSA. The recommended qualification corridors are set forth below in Table 17.

TABLE 17—COMPARISON OF PETITIONED ACETABULUM QUALIFICATION CORRIDORS

Pelvis-Acetabulum qualification test	December 14, 2006 final rule corridor	Petitioned recommendations			
		Alliance—January 2007	Alliance—December 2007	FTSS	Denton/SAE DTES
Impact Velocity (m/s)	6.6–6.8	Same as FR	Same as FR	Same as FR	Same as FR.

TABLE 17—COMPARISON OF PETITIONED ACETABULUM QUALIFICATION CORRIDORS—Continued

Pelvis-Acetabulum qualification test	December 14, 2006 final rule corridor	Petitioned recommendations			
		Alliance—January 2007	Alliance—December 2007	FTSS	Denton/SAE DTES
3-mm Pre-Crushed Plugs					
Peak Impactor Acceleration (g)	38–47	Same as FR.			
Peak Lateral Pelvis Accel. (g)	41–50.				
Peak Lateral Pelvis Acceleration after 5 ms (g)		30–45.			
Peak Acetabulum Force (kN)	3.8–4.6	3.7–4.4.			
2-mm Pre-Crushed Plugs					
Peak Impactor Acceleration (g)		40–47.			
Peak Lateral Pelvis Accel. (g)					
Peak Lateral Pelvis Acceleration after 5 ms (g)		31–45.			
Peak Acetabulum Force (kN)		3.8–4.3.			
2- and 3-mm Pre-Crushed Plugs					
Peak Impactor Acceleration (g)				Same as FR	38–49.
Peak Lateral Pelvis Accel. (g)					REMOVE.
Peak Lateral Pelvis Acceleration after 5 ms (g)			30–45*	34–42	IF KEEP, 28–48.
Peak Acetabulum Force (kN)			3.6–4.4*	3.6–4.4	3.64–4.42.

* It is unknown how the plugs were crushed for the data submitted by the Alliance in December 2007. Therefore, we have included their petitioned corridors in the ''2 and 3-mm pre-crushed plugs'' category.

Agency Response

NHTSA pooled all the relevant data for 3 mm pre-crushed plugs in the formulation of new corridors for the pelvis acetabulum qualification test. While the petitioners provided numerous pelvis-acetabulum qualification test results to support their recommendations for corridor adjustment, all tests conducted by FTSS and Ford were performed using 2 mm pre-crushed plugs. Because the plug response characteristics cannot be determined from pre-crushing 2 mm, the results derived from these plugs cannot be considered valid for the agency's corridor analysis. Likewise, the petitioners' recommendations for performance corridors based on analysis of 2 mm pre-crushed plugs cannot be considered.

Performance corridors for the pelvis-acetabulum were formed following the methods described in section XI of this preamble. The report, ''Analysis and Development of SID–IIsD Qualification Specifications in Response to Petitions for Reconsideration,'' describes the statistics and rationale used for the placement of corridor bounds, and provides figures showing the responses for each qualification measurement. The corridors for peak lateral pelvis acceleration (now after 6 ms) and peak acetabulum force were revised to reflect the statistics of the expanded data set, which includes tests performed by NHTSA and FTSS (on dummies purchased by NHTSA). These corridors sufficiently contained the variation in the data, and are adopted in this final rule. The final corridors are shown in Table 18.

TABLE 18—PELVIS-ACETABULUM QUALIFICATION CORRIDORS

Pelvis-Acetabulum qualification measurement	December 14, 2006 corridor	Statistical corridor	Today's final rule corridor
Peak Impactor Acceleration (g)	38–47	39–46	38–47
Peak Lateral Pelvis Accel. (g) (over entire test period)	41–50	N/A	N/A
Peak Lateral Pelvis Acceleration after 6 ms (g)	N/A	34–42	34–42
Peak Acetabulum Force (kN)	3.8–4.6	3.60–4.30	3.60–4.30

f. Pelvis Iliac Qualification Corridors

The December 14, 2006 final rule (572.199) specified an iliac qualification procedure where three performance corridors were set for a specified impact velocity: Peak impactor acceleration, peak lateral pelvis acceleration, and peak iliac wing force.

Requested Change

The Alliance, FTSS and Denton/SAE DTES petitioned for changes to these qualification corridors. The Alliance pooled data from FTSS, Ford and GM in the evaluation of M3 wings with standoffs tested to the OSRP procedure. It also used M3 wings with standoffs data from FTSS using the final rule iliac qualification procedure. Each set of recommended corridors were created using ±2 s.d. from the mean. FTSS provided data for M3 wings with standoffs, but did not propose corridors. It did propose corridors for M2, in case M3 was not adopted. It pooled data from FTSS and NHTSA and used the NHTSA statistical procedure for its M2 recommendation. Denton/SAE DTES used data from FTSS to establish corridors for M3 with standoffs. It also pooled data from FTSS and NHTSA to establish M2 corridors. Each set of recommended corridors were created using ±3 s.d. from the mean. The data are summarized in Table 19.

TABLE 19—COMPARISON OF PETITIONED PELVIS-ILIAC QUALIFICATION CORRIDORS

Pelvis-iliac qualification test	December 14, 2006 final rule corridor	Petitioned recommendations		
		Alliance (±2 s.d.)	FTSS (NHTSA procedure)	Denton/ SAE DTES (±3 s.d.)
Impact Velocity (m/s)	4.2–4.4	Same as FR	Same as FR	Same as FR
Material #2 w/NHTSA plate—Final Rule procedure				
Peak Impactor Acceleration (g)	34–40		33–40	32–41
Peak Lateral Pelvis Accel. (g)	27–33		Same as FR	22–37
Peak Iliac Wing Force (kN)	3.7–4.5		3.6–4.4	3.2–4.8
Material #3 w/standoffs—Final Rule procedure				
Peak Impactor Acceleration (g)		37–44		35–46
Peak Lateral Pelvis Accel. (g)		29–41		26–44
Peak Iliac Wing Force (kN)		3.7–5.1		3.3–5.5
Material #3 with standoffs—OSRP procedure				
Peak Impactor Acceleration (g)		35–42		
Peak Lateral Pelvis Accel. (g)		28–37		
Peak Iliac Wing Force (kN)		3.6–4.8		

Agency Response

Although the Alliance, IIHS, FTSS, and Denton/SAE DTES petitioned for the use of the iliac wing design of M3 with standoffs and provided an extensive amount of iliac qualification data for this wing design, no data was provided for M3 wings with standoffs and a backer plate. In today's final rule, NHTSA has specified use of the backer plate along with the M3 with standoffs design because quasi-static tests showed that it is still possible for the M3 with standoffs iliac wing to off-load the iliac load cell when used without a backer plate. However, because the plate has little effect on iliac response in qualification tests (see Table 2 in section V.b of this preamble), NHTSA has decided that the petitioners' ''M3 with standoffs'' data using the NHTSA final rule test procedure are valid and should be considered for corridor formation.

In response to the petitions for reconsideration, NHTSA has developed the iliac performance criteria based on an analysis of 83 ''M3 with standoffs'' tests performed by FTSS, multiple series of agency pelvis-iliac qualification tests using a total of four pelvis skins and six (three right, three left) M3 iliac wings with standoffs and a backer plate, and agency tests of two pelvis skin/iliac wing combinations with no backer plate. In total, 123 impacts were included from agency testing, 107 of which were with and 16 were without a backer plate.[45]

Performance corridors for the pelvis-iliac were formed following the methods described above using the mean, SD, and CV of the data set and setting bounds at a certain distance from the mean value, depending on the CV. The report ''Analysis and Development of SID–IIsD Qualification Specifications in Response to Petitions for Reconsideration'' describes the statistics and rationale used for the placement of corridor bounds, and provides figures showing the responses for each qualification measurement. In general, the corridors were shifted upward from those established in the December 2006 final rule to account for the higher responses of M3 over M2. Final placement of the corridors was primarily based on the responses of a subset of the NHTSA tests (n = 53) that were conducted with a minimum two-hour recovery time, as specified in this final rule. The peak lateral pelvis acceleration corridor was expanded somewhat from the statistical corridor (set at ±10% from the mean) to account for the variation in response seen for this measurement. The peak impactor acceleration and peak iliac wing force corridors were revised based on the statistics of the two-hour recovery time (n = 53) data set. The final corridors are shown in Table 20.

TABLE 20—PELVIS-ILIAC QUALIFICATION CORRIDORS

Pelvis-iliac qualification measurement	December 14, 2006 corridor	Statistical corridor	Today's final rule corridor
Peak Impactor Acceleration (g)	34–40	36–45	36–45
Peak Lateral Pelvis Accel. (g)	27–33	29–36	28–39
Peak Iliac Wing Force (kN)	3.7–4.5	4.10–5.10	4.10–5.10

XI. Drawing Package and PADI

The petitions for reconsideration suggested a number of changes to the drawing package that was incorporated by reference into the part 572 regulatory text set forth in the December 14, 2006 final rule. These requests are discussed below, along with agency responses. Because the drawings in the drawing

[45] In evaluating these test results, it was noticed that the first impact in a series of impacts often had a lower response than subsequent impacts. It was determined that this occurrence will not be problematic in compliance environments. Our analysis of this observation is presented in the report ''Analysis and Development of SID–IIsD Qualification Specifications in Response to Petitions for Reconsideration.''

package and the PADI are being changed as discussed below, this final rule updates the references to the drawing package, parts list, and PADI incorporated by reference into part 572. The updated drawing package, parts list, and PADI referenced by today's final rule are dated July 1, 2008.

Data submitted by FTSS and Denton relating to the drawing package has been compiled by NHTSA and submitted to the docket in a memorandum entitled, ''Drawing Package Petition Data.'' This section refers to tables set forth in this memorandum. Other memorandums have been submitted to the docket that document communications between NHTSA and FTSS and Denton regarding the SID–IIsD drawing package.

As a result of the changes made by today's final rule, the total weight of the dummy is adjusted to 97.26 ±2.40 lb. Changes to weights and masses discussed in the following sections are reflected in Drawing 180–0000 Sheet 4 of 5 and in Table 20 of the PADI. For a compilation of center of gravity (CG) and weight measurements used to respond to these petitions for reconsideration, *see* Tables 1–4 in the docket memorandum, ''Drawing Package Petition Data,'' *id.*

a. Issues Raised by Both FTSS and Denton

1. Referenced Drawings

FTSS stated that the following drawings refer to Hybrid III drawings and believed that the contents in the title blocks, such as material and finish, should be removed: 180–1003, 180–1004, 180–1005, 180–2009, 180–3005, 180–5160–1/–2, 180–5141–1/–2, 180–5381, 180–5303, 180–5301, 180–5382, 180–5540, 180–5504, 180–5503, 180–5508, 180–5703, 180–5704, 180–5709, 180–5906–1/–2, 180–5902, 180–5905, 180–5904, and 180–5706. Denton also listed drawing 180–5903. Denton stated that all of these prints simply provide a reference back to another print that is the same. The petitioner believed that the drawings include a material callout which should be removed.

Agency Response: We agree with the petitioners and have removed the material callouts on these drawings. Also, the note ''scale'' has been removed, because it does not apply to a blank reference drawing. However, the finish specification is part of the general dimension and tolerance block and will be maintained. While reviewing the drawing package, we found that drawing 180–5708, which is ''same as part number A–1887,'' also has a defined scale that has been removed.

2. Drawing 180–3113, Side, Plate—Spine Box

FTSS stated that the dimension .788 (grid reference C4) should read (.788), a reference dimension. Denton suggested deleting this .788 dimension in the left view, as it is double dimensioned.

Agency Response: These comments are correct. We have added parentheses around the .788 dimension in the left view to make it a reference dimension.

3. Drawing 180–3361, Lower Bib—Ribs

FTSS stated that 12xR.05 (B1) should read 8xR.05. Denton stated that the 12X radius callout should be 8X.

Agency Response: These comments are correct. In drawing 180–3361, we have changed 12xR.05 in grid B1 to 8xR.05.

4. Drawing 180–3343, Neck Mount Block, Machined

FTSS stated that dimension 2.4 (B5) is not clear, and should read 2.40 (CTR OF R.25). Denton stated that the 2.40 dimension is unclear and should be replaced with a dimension to the corner.

Agency Response: We agree that the dimension is not clear. However, a dimension to the corner would not describe the part as well as a dimension to the center of the radius. The 2.4 inch (in) dimension needs to be labeled as the center of the 0.25 in radius. Accordingly, we have added ''(CTR OF R.25)'' to the dimension, as well as a center of radius symbol, for clarification.

5. Drawing 180–3501, Sternum

FTSS stated that R.500 (B2) should read 4xR.500. Denton also stated that the R.500 should have 4X added in front of it.

Agency Response: We agree that this radius needs to be labeled 4x to describe all four edges. We have added ''4x'' before the R.500 dimension in grid B2 of drawing 180–3501.

6. Drawing 6000075, Bearing Spherical .500 X 1.000

FTSS believed that dimension Ø.156+.002/−.000 should read 2x Ø.156+.002/−.000 THRU. Denton stated that the .156 dia should have 2X added to it since it does not go through.

Agency Response: There are two holes, so we have added ''2x'' before the 0.156 diameter dimension in grid C3, drawing 6000075. However, the holes do not go all the way through, so ''THRU'' was not added.

7. Drawing 180–3363, Lower Ribs—Bending Upper Torso

FTSS stated that the tolerance for the dimensions is too tight for manufacturing; Hybrid III dummies use a tolerance of ±0.30 for the general dimension and ±0.12 for the bend radius. FTSS recommended following Hybrid III dummy rib dimension tolerance practice, and change the 4xR2.75 to 4xR2.75±0.12, change 9.45±0.20 to 9.45±0.30, and change 7.48±0.20 to 7.48±0.30.[46] Denton also believed that the tolerances on the rib bending are unrealistically tight. Denton believed appropriate tolerances should match what is on the H–III50M ribs such as 78051–31: The 2.75 radius dimension should have a tolerance of ±.12 to match the radius tolerance on 78051–31. The size dimensions 7.48, 4.03, 3.45, and 9.95 should have tolerances of ±.03 to match 78051–31. Denton believed that the dimensions 4.73 and 7.20 should be made reference because they are almost impossible to measure.

Agency Response: We have changed the tolerance of ±0.02 for the 7.48 and 9.95 dimensions to ±0.03 to match that of the Hybrid III dummy ribs, and have added the tolerance of ±0.12 to the bend radius dimension, as requested. In addition, we have added a tolerance of ±0.03 to the 4.03 and 3.45 dimensions. The dimensions 4.73 and 7.20 are made reference.

8. Drawing 180–3366, Shoulder Rib—Bending Upper Torso

For the same reason as stated above for drawing 180–3363, FTSS recommended that NHTSA follow Hybrid III dummy rib dimension practice and change 4xR1.93 to 4xR1.93±0.12, change 5.88±.20 to 5.88±.30 and change 9.98±.20 to 9.98±.30. Denton believed that the tolerances on the rib bending are unrealistically tight and that appropriate tolerances would match what is on the HIII50M ribs, *e.g.,* 78051–31. Denton recommended that the 1.93 radius dimension should have a tolerance of ±.12 to match the radius tolerance on 78051–31, and that the size dimensions 5.88, 3.23, 2.65, and 9.98 should have tolerances of ±.03 to match 78051–31. The petitioner suggested that dimensions 3.95 and 8.05 should be made reference because they are almost impossible to measure.

Agency Response: The same errors are present in FTSS's recommended changes as noted in #7 above. Otherwise, the petitioners are correct. We have changed the tolerance of ±0.02

[46] There are several typos in FTSS's comment. The tolerance for general dimensions on the Hybrid III dummies is ±0.03, not ±0.30. The petitioner asks to change ''9.45±0.20'' to ''9.45±0.30''. The dimension and tolerances are in error. The petition should ask to change ''9.95±0.02'' to ''9.95±0.03.''

on the 9.98 and 5.88 dimensions to ±0.03 to match that of the Hybrid III dummy ribs and have added the tolerance of ±0.12 to the bend radius dimension. In addition, a tolerance of ±0.03 is added to the 3.23 and 2.65 dimensions, and the dimensions 3.95 and 8.05 are made reference.

9. Drawing 180–9060, Spacer

FTSS and Denton stated that dimension 0.194 +0.001/-0.000 (C2) should read 0.194 +0.010/-0.000.

Agency Response: NHTSA agrees and has changed the tolerance as petitioned.

10. Drawing 180–5900–1/–2, Foot Assembly Molded 45°, Left and Right

FTSS stated that the weight specification in note 1 should read 1.78±.10 lbs to be consistent with weight table in drawing 180–0000 sheet 4 and the HIII5F specification.[47] Denton believed that the weight tolerance should be ±.10 lb, similar to the standard HIII5F foot 880105–650/651.

Agency Response: The HIII5F drawing and the SID–IIs foot weight specification on sheet 4 of 180–0000 specify 1.75 ±0.10 lbs. Drawings 180–5900–1 and –2 specify a weight of 1.75 +/- 0.08 lbs. We agree with the petitioners and have changed the weight specification in note 1 on 180–5900–1, –2 to read 1.75 ±0.10 lbs to be consistent with weight table in drawing 180–0000 sheet 4, and the HIII5F. In addition, Note 4 is revised such that the phrase, ''* * * weight tolerance was 0.10 * * *'' is removed.

b. Issues Raised By FTSS

1. Drawing 180–0000, SID–IIsD Complete Assembly, Sheet 4 of 5

A. *Arm CGy:* FTSS proposed to change the tolerance from ±0.15 to ±0.30 inch (in). In its addendum to the petition for reconsideration, FTSS proposed to change the arm CGy from 0.50±0.15 to 0.49±0.20 in.

Agency Response: The final rule CG location of 0.50 in should be retained because it is very close to the FTSS recommendation and it sufficiently represents the average of the data. However, increasing the tolerance to 0.20 in is acceptable because measurement of the arm CG is susceptible to error due to the pivot point of the arm. Thus, the arm CGy is changed from 0.50 ±0.15 in to 0.50 ±0.20 in.

B. *Arm CGz:* FTSS suggested changing the dimension from 3.40 to 3.56 in. In its petition addendum, item #5b, FTSS proposed to change this value from 3.40±0.30 to −3.56 ± 0.20 in.[48]

Agency Response: We are changing the arm CGz from 3.40±0.30 in to 3.55 ±0.30 in. A dimension of 3.55 ±0.30 in retains the original tolerance level while still including the FTSS recommended range. 3.55 in is the average of all arm CGz values measured by FTSS and NHTSA, and includes all measurements from NHTSA-owned dummies (*see* Table 1 of the memorandum entitled, ''Drawing Package Petition Data,'' in the docket for today's final rule.)

C. *Upper Torso Weight:* FTSS suggested changing this dimension from 24.65 to 24.26 lb.

Agency Response: We have changed the upper torso assembly without chest jacket weight from 24.65 ±0.40 lb to 24.50 ±0.45 lb. An average was taken of all available data (see Table 2, ''Drawing Package Petition Data,'' *id.*) with the lower abdominal potentiometer (hereafter referred to as the (''5th pot'') excluded.[49] A tolerance of 0.45 lb around a mean of 24.50 lb includes all of the available data.

D. *Upper Torso CGy:* FTSS suggested changing the specification from 0.63±0.15 to −0.70±0.20 in.

Agency Response: We agree to change the upper torso CGy to 0.70 ±0.20 in. An average was taken of the data provided by FTSS (*see* Table 2 in ''Drawing Package Petition Data,'' *id.*) with the 5th pot excluded. A specification of 0.70 ±0.20 in includes all the relevant data.

E. *Upper Torso CGz:* FTSS suggested changing the specification from 4.30 to 4.38 in.

Agency Response: We agree to the suggestion to change the nominal value of the upper torso CGz to 4.38 in. A CGz of 4.38 in is slightly higher than that specified in the final rule, which is understandable since FTSS did not include the 5th pot in their measurements of the upper torso. As the location of the 5th pot is moved to the lower torso, a higher upper torso CGz is expected. An average was taken of the data provided by FTSS (*see* Table 2 in ''Drawing Package Petition Data,'' *id.*) with the 5th pot excluded. A specification of 4.38 ±0.20 in includes all of the relevant data.

F. *Lower Torso Weight:* FTSS suggested changing the specification from 27.50 to 27.43 lb.

Agency Response: We are denying the request to change the lower torso weight to 27.43 lb, but we are changing the lower torso weight to 27.60 ±0.40 lb in accordance with FTSS and NHTSA adjusted data. The petitioner's suggested specification for lower torso weight included the 5th deflection potentiometer, but did not include the iliac wing backer plates.[50] In the revised drawing package, the lower torso will include the 5th pot and the iliac wing backer plates. Thus, the FTSS measurements were adjusted by adding the weight of the backer plates, and the NHTSA measurements made per the final rule (with the 5th pot in the upper torso) were adjusted by adding the weight of the potentiometer. Then, the mean of all NHTSA and FTSS measured weights was calculated to be 27.61 lb (Table 3, ''Drawing Package Petition Data,'' *id.*). The lower torso weight specification is centered at this mean.

G. *Lower Torso CGx:* FTSS suggested changing the tolerance from 0.10 to 0.15 in.

Agency Response: We agree to change the lower torso CGx tolerance to ±0.15 in as this tolerance is reasonable and acceptable.

H. *Jacket Weight:* FTSS suggested changing the specification from 1.40±0.10 to 1.27±0.11 lb (578±50 grams).

Agency Response: FTSS suggested a large change in weight because the jacket is being manufactured by a new supplier. We agree to changing the weight, but we believe that a new weight specification should include as many of the old jackets as possible. NHTSA is thus specifying a jacket weight of 1.30 ±0.15 lb. This tolerance would include all but one of the agency measurements and the whole range suggested by FTSS (see Table 4 in ''Drawing Package Petition Data,'' *id.*).

I. *Lower Torso CGy:* FTSS suggested a specification of 0.08±0.20 in.

Agency Response: This request is denied. No specification for lower torso CGy was given in the final rule; this is because the lower torso is symmetrical according to the final rule drawing package. The CG offset amount suggested by FTSS is likely due to the asymmetry of the 5th potentiometer, which FTSS included in its lower torso measurements. Although this final rule includes the 5th potentiometer in the lower torso for weight and CG measurements, FTSS's suggested CG is so close to zero that it is not deemed

[47] It is believed that the FTSS petitioned weight specification had a typographic error and was meant to read 1.75± 0.10 lbs since that is what was specified on drawing 180–0000 sheet 4 and on the HIII5F drawings 880105–650/651.

[48] FTSS drawings of the SID–IIsD show CG origins and axes with a defined positive direction, thus, CG values that fall on the negative side of the axis are labeled as negative CG's. In contrast, NHTSA drawings do not indicate positive/negative direction of the CG axes, so all CG's are positive in sign.

[49] The lower abdominal rib potentiometer (or 5th pot) has been moved from the upper torso to the lower torso for purposes of measuring the weight and cg of these dummy segments. This change is discussed later in this preamble.

[50] See ex parte memorandum in the docket.

necessary to specify a CG requirement in the y-direction.

J. *Lower Torso CGz:* FTSS suggested a specification of 1.01±0.20 in.

Agency Response: We agree with this suggestion. The proposed CGz location is very close to the final rule specification, and FTSS based this recommendation on measurements of 33 dummies with the 5th potentiometer included. Although General Dynamics measured five NHTSA lower torsos without the 5th pot and found an average CGz location of 0.88 in, the method General Dynamics used to hold the lower torso while measuring the CG resulted in the pelvis flesh compressing and inaccurate data may have been obtained (*see* note following Table 3 in ''Drawing Package Petition Data,'' *id.*). The data from General Dynamics was thus disregarded in the analysis. Although FTSS did not include the iliac wing backer plates in their lower torso measurements, this part should not affect the CGz of the assembly because it is centered on the CG origin.

2. Drawing 180–1000, 6 Axis Head Assembly

FTSS requested changing the head skin thickness dimension 0.480±.030 to 0.510±.030 to ensure the head performance.

Agency Response: We agree to change the head skin thickness to 0.510 in, as petitioned, but we have increased the tolerance so that the thickness specification will be changed as follows: From 0.480 ±0.030 in (0.450–0.510 in) to 0.51 ±0.05 in (0.46–0.56 in).

Prior to the final rule, FTSS provided thickness measurements for two head skins. These measurements, as well as VRTC head skin measurements from new dummies, were used to evaluate the FTSS suggestion, and are shown in Tables 5 through 7 of the memorandum ''Drawing Package Petition Data,'' *id.*. VRTC noted that some of the FTSS measurements would fail the thickness dimension suggested by FTSS. When asked by VRTC why it had recommended such a large shift in head skin thickness, FTSS replied:

> The original SID–IIs head skin mold was not symmetrical left to right and produced head skins that required FTSS to manually trim the head skin thickness to meet the Head Drop corridors on both sides of the head. The original head skin mold was a legacy problem and was a carry over from the Hybrid III 5th Female dummy. This caused problems in manufacturing quality head skins. A new head skin mold was manufactured about a year ago to ensure left side to right side symmetry of the head skins. The new mold provides symmetrical head skins, but the skin thickness needed to be increased to 0.510 inches to meet the Head Drop test corridors.

Based on the head skin thicknesses provided by FTSS and obtained by the agency, this final rule specifies a head skin thickness of 0.51 ± 0.05 in. This specification is met for most dummies in critical areas (*i.e.,* areas that receive impact in vehicle and qualification tests). Additionally, this range includes nearly all of the thickness values allowed by the final rule, resulting in minimal impact on the ability of older skins or skins from different manufacturers to pass the thickness specification. The corresponding head drop test results for agency dummies are shown in Table 8 in the memorandum, ''Drawing Package Petition Data,'' *id.* The results of these tests indicate that the recommended head skin thickness does not compromise the dummy's ability to pass the head drop test. However, it is emphasized that while the head skin thickness is specified to facilitate consistency between dummies, it is the manufacturer's responsibility to meet all head specifications, including skin thickness, weight, cg, and qualification specifications.

3. Drawing 180–4320–1/2, Iliac Wing

FTSS stated that the right view of 180–4320–1 and the left view of 180–4320–2 needs to be updated to reflect the actual part.

Agency Response: This aspect of the FTSS petition is moot, as it refers to drawings that are replaced with drawings of the new M3 with standoffs iliac wing.[51] This final rule replaces drawings 180–4320–1/2 with drawings 180–4322–1/2 of the new iliac wing design. We are also replacing drawing 180–4321, Iliac Wing Support Plate (the steel plate that is molded within the iliac wing), with drawing 180–4323, which has the ''standoffs.'' Corresponding changes have also been made to Table 9 and multiple figures in the PADI.

4. Drawing 180–3000, Upper Torso Assembly

The petitioner believes that the orientation of Item 34 is not correct and that it needs to be rotated 180 degrees.

Agency Response: The orientation of Item 34 is correct as is and will not be changed. However, the view in sheet 1 shows the rear of the dummy thorax while sheet 2 shows the front view, which may have caused confusion. Thus, we are adding a note to sheet 2 that indicates the view shown in the drawing.

5. Drawing 180–3623, Lower Rib Pad—Upper Torso

FTSS believed that fastening the lower rib pad to the spine box can result in conditions of over-tightening and/or under-tightening the pad fasteners during the installation process, due to the elasticity of the part. Over-tightening the pad can cause interference with another fastener in the spine box. FTSS redesigned the lower rib pad to include an aluminum insert at the site of attachment to the spine box, and requested the following changes:

Obsolete drawing 180–3623, Lower Rib Pad—Upper Torso;

Add drawing 180–3628, Lower Rib Pad Assembly, Upper Torso;

Add drawing 180–3627, Lower Rib Pad Insert.

An addendum to the petition (Docket No. NHTSA–2006–25442–0040.1) requested a change to the rib pad inserts. Originally, the inserts were rectangular, but FTSS found that this design could possibly tear the rib pad during handling of the parts. Thus, FTSS suggested that the inserts should be of a circular design.

Agency Response: The agency is granting the request to include circular aluminum inserts within the rib pad, and has incorporated the suggested drawings into the SID–IIsD drawing package with the following part descriptions: Drawing 180–3628, Rib Pad Assembly—Upper Torso; Drawing 180–3627, Rib Pad Insert—Upper Torso. The circular inserts are not expected to have any effect on the performance of the part. VRTC purchased and evaluated two rib pads with the original rectangular inserts, and found that the proposed rib pads are acceptable and will cause no foreseeable detriment. Because the inserts have only been added to provide a non-deformable material within the rib pad for attachment to the spine box, there is no foreseeable problem with this design change. Additionally, VRTC purchased and evaluated a rib pad with the circular inserts, and found that the inserts have no effect on proper installation of the rib pad. Thus, it was concluded that this was an acceptable design change. Table 7 and Figure 58 of the PADI have also been amended to reflect this change.

[51] The agency had contacted FTSS to request clarification of this aspect of the petition, and FTSS responded by providing drawings for these parts (see ex parte communication) that showed an additional radius in the right view of 180–4320–1 and the left view of 180–4320–2. However, it appeared that the parts did not have this additional radius and that the original iliac wing drawings reflect the parts as they were.

6. Drawing 180–3450, Jacket

In its addendum, FTSS suggested a material thickness specification of 0.286 ±0.030 in (7.26 ±0.76 mm). FTSS requested this change in jacket thickness to reflect a change in jacket characteristics due to a change in the jacket supplier.

Agency Response: We are amenable to including FTSS's suggested thickness range for currently-manufactured jackets while also including specifications that would accommodate jackets made to the December 14, 2006 final rule specifications. The final rule specified a neoprene thickness of ¼ in ±3/64 in (a range of 0.203–0.297 in), laminated on both sides with lightweight circular jersey-net nylon fabric of thickness .020 ±.005 in. FTSS requested a thickness ranging from 0.256–0.316 in. Based on comparisons of the final rule and FTSS-recommended thickness ranges, the agency is adopting a thickness specification of 0.26 ±0.05 in, which would include nearly all of both ranges, while only slightly increasing the tolerance from that specified in the final rule. This specification is for the overall thickness of the jacket (Neoprene and laminated fabric). However, the fabric thickness specification will remain on the drawing to ensure that the fabric and Neoprene thicknesses (and thus, dummy thorax performance) will be consistent among different manufacturers. Accordingly, note 2 in drawing 180–3450 is changed to read: ''Material: 100% neoprene material, laminated on both sides with lightweight circular jersey-net nylon fabric, 0.20 ± .005; overall thickness 0.26 ± 0.05.''

7. Drawings 180–6011–1/2, Arm Flesh, Molded Left/Right

FTSS asked for changes to the drawing package specifications regarding the test dummy's overall arm length, arm depth, arm width, and also with regard to additional NHTSA dimensions specified in the drawings. The petitioner requested the changes to reflect what FTSS believed are improvements made to the SID–IIs left arm and the right arm molds to eliminate left side to right side variations between the two previous arm molds and to improve the overall quality of the dummy. The petitioner believed that the changes bring consistency to the dummy with respect to the Thorax Impact With Arm test when impacting the dummy on either the left side or right side.

FTSS submitted arm dimension data to support its petition for reconsideration.[52] The data were measured and collected on nine SID–IIs arms manufactured by FTSS. All arms are from FTSS's new SID–IIs arm molds, varying in production dates ranging from October 2006 through March 2007.

FTSS did not request a change to the overall arm length, but petitioned for the following corrections or clarifications to drawings 180–6011–1 and 180–6011–2 based on the data provided: (A) Overall arm depth—change the arm depth dimensional tolerance from +0/-0.10 in to ±0.10 in; (B) overall arm width—correct tolerance to be +0/-0.10 in; and (C) drawing clarity—FTSS believed that several dimensions that NHTSA had on these drawings are not adequately defined to produce consistent measured values.

Agency Response

A. *Overall arm depth:* The agency believes that a tolerance of ±0.10 in is too large, since the arm depth must be fairly well controlled to ensure good responses in the crash environment. Arm depths measured by FTSS and VRTC (see Table 9 of the memorandum, ''Drawing Package Petition Data'' for VRTC data) were compared to obtain a specification that would include as many dummies as possible. We determined that a dimension of 2.30 ± 0.06 in (2.24–2.36 inches) includes all NHTSA and FTSS dummies and increases the overall tolerance only by 0.02 in from the final rule. Accordingly, we are changing the specification for arm depth to 2.30 ±0.06 in.

B. *Overall arm width:* FTSS observed that the NHTSA drawing specifies the arm width dimension to be 3.47 +0/−0.01 in. It stated that the tolerance of +0/−0.01 in is not attainable for this dimension and was specified in error, and that when the SID–IIs Build Level D drawings were under development for NHTSA, they specified an arm width tolerance of +0/−0.10 in, which is an achievable tolerance for vinyl and foam dimensions. In response, we note that drawing 180–6011–1 incorrectly specifies the arm width dimension tolerance as +0/−0.01 in, as noted by the petitioner, but that drawing 180–6011–2 correctly specifies a tolerance of +0/−0.10 in. Therefore, we agree with the petitioner regarding drawing 180–6011–1 and are correcting the tolerance on drawing 180–6011–1 to be +0/−0.10 in.

C. *Drawing clarity:*

FTSS stated that certain dimensional measurements specified in Revision B of drawings 180–6011–1 and 180–6011–2 ''are not adequately defined to produce consistent measured values.''

(i) 1.75 ±0.05 inch dimension. FTSS stated that ''it is unclear where this dimension is to be measured from,'' and further suggested that ''this dimension should be a reference dimension given that the material being measured is made of vinyl and foam, which can vary due to aging.''[53]

(ii) 2.90 inch reference dimension, 2.18 inch reference dimension, and 1.00±0.05 inch dimension. FTSS stated that ''it is unclear where [these dimensions are] to be measured from,'' and that the 1.00 dimension ''should be a reference dimension since the bottom surface is vinyl. FTSS notes that a tolerance of ±0.05 in for vinyl and foam material is not achievable.'' The petitioner submitted a figure that FTSS believed should be made part of the drawing package, depicting the arm in side view.

Agency Response: The four dimensions addressed by the petitioner were not shown well on the December 2006 final rule arm drawings, and are confusing. They were meant to locate points to define the curvature of the arm. NHTSA has removed these dimensions from the end view and has created two sections (one at 0.19 in from the elbow end, and one at 6.5 in from the elbow end, just below the shoulder portion) with dimensions shown clearly. A note has been added to clarify that the dimensions locate points to define the curvature of the arm. In addition, we have added to the section views a dimension indicating the height of the section so that the taper of the outside surface of the arm is somewhat defined.

(iii) Tolerance values. FTSS also commented generally on tolerance values established for drawings. The petitioner stated:

> On drawings 180–6011–1 and 180–6011–2, note #4 states: Tolerance ±0.05 apply to all dimensions unless otherwise specified. FTSS does not believe this tolerance is achievable for vinyl and foam parts. We base this statement on our many years of experience in manufacturing dummy parts. Vinyl and foam shrinks at varying rates and dimension tolerances must reflect these characteristics. FTSS recommends that NHTSA avoid using any vinyl or foam tolerance smaller than ±0.10 in.

Agency Response: VRTC checked all vinyl/foam parts in the drawing package

[52] FTSS Report re: Drawing of Arm for SID–IIs Dummy. Submitted following their petition for reconsideration, Docket No. NHTSA–2006–25442–37.

[53] It appears that due to confusion about where the 1.75 in dimension should be measured from, FTSS's measurements of this dimension were taken incorrectly. Accordingly, their measurements do not indicate a problem with the value of the 1.75 inch dimension. (See next section of this preamble.)

and the only tolerances smaller than ±0.10 in were on 180–6011–1 and –2. These tolerances were ±0.05 in. The agency agrees that these tolerances should be changed to ±0.10 in for practicability reasons. Accordingly, note #4 in drawings 180–6011–1/2 is changed to read ''Tolerance ±.10 apply to all dimensions unless otherwise specified.''

c. Issues Raised By Denton

1. Drawings 180–1007, 180–4701, 180–5302, 180–5360, 180–5340, 180–5505, 180–5509, 180–5501, 180–5700, 180–5701, 180–5702, 180–5707, 180–5900–1, 180–5900–2, 180–5901–1, 180–5901–2, 180–5705

Denton stated, ''the last note on each of these drawings says that it is the same as some other drawing for a different dummy except for a change described in this note. We request that this last note be deleted from each drawing. We think that keeping these notes will cause confusion.''

Agency Response: NHTSA disagrees. We asked Denton to elaborate on the reason for the confusion.[54] Denton responded that the notes are difficult to explain to customers, because it is expected that identical parts will be referenced to each other, while different parts will not be. We do not believe this reason warrants deleting the notes. These notes clarify how the SID–IIsD drawing is different from another very similar drawing and facilitates easy identification of those differences. Accordingly, we are denying this request and will keep clarification notes on these drawings.

2. Drawing 180–4212, Flange, Lower

Denton stated that ''the material should be 1018 or equivalent.'' Denton informed NHTSA that it believes ''there is no reason for 1117 steel to be called out for this part. 1018 steel is used on many parts in the dummy and meets all of the requirements for this part. Calling out a special steel for one part simply adds cost to the part for no reason since a special material must be ordered in small quantities and handled just for this part.

Agency Response: We agree to change the material for drawing 180–4212 to CRS 1018. We investigated specifications for flange material in the HIII5F dummy drawing and compared those to the SID–IIsD package. The HIII5F drawings for the lumbar flanges (880105–1093 & –1097) call for SAE 1117 steel; the SID–IIs upper lumbar flange (180–4211) calls for 1018 CRS; and the SID–IIs lower lumbar flange (180–4212) calls for SAE 1117 steel. FTSS, the dummy manufacturer initially involved with development of the SID–IIsD, indicated that SAE 1117 and CRS 1018 have similar yield strength. The agency has determined that specifying CRS 1018 is appropriate for the reasons provided by Denton and FTSS. However, the agency is not adding ''or equivalent.'' This allowance ''or equivalent,'' is given for non-metal materials in the SID–IIs because plastics, rubbers, and other non-metals do not have well-defined material properties. With the exception of the ES–2re, other dummy drawing packages do not generally allow equivalent metal materials.[55]

3. Drawing 180–1000, 6 Axis Head Assembly

Denton stated that ''the skin thickness should be defined over a region of at least ±20 degrees on each side of each plane A to cover a region in the back view. Also, the thickness should be confined to a region in the side view. This would define an impact region on each side of the head that must meet the thickness requirements.''

Agency Response: The petitioner provided no head skin thickness data with which to make a specification in these regions. The agency declines to expend resources at this time to develop further specifications in this area.

4. Drawing 180–2006, Upper Neck Bracket

Denton noted that ''this drawing appears identical to 880105–207, and should therefore be treated like other identical drawings, such as 180–2009 where there is simply a reference to the identical drawing. Also, if this is done the material callout should be removed.''

Agency Response: The request is granted. VRTC has examined the differences between the drawing for the HIII5F upper neck bracket part (880105–207) and that for the SID–IIsD (180–2006) and has determined small differences between them will not affect part functionality or interchangeability. FTSS, the dummy manufacturer originally involved with development of the SID–IIsD, confirmed that the ''minor differences [between the two drawings] are on tolerance level, and would not affect the interchangeability between the two parts.'' Accordingly, we have removed the schematic, material specification, and scale from the drawing and added a note stating, ''Same as 880105–207 rev I.''

5. Drawings SA572–S62, 3 Axis Shoulder Load Cell, and 180–3330, Shoulder Loadcell Simulator, Assembly

Denton stated that: ''the center hole in the load cell for mounting the arm is incorrect. The structural replacement (180–3330) calls out a hole of .391 diameter × .230 ±.001 deep. The Load Cell (SA572–S62) calls out .375 diameter × .220 deep. These two drawings should match each other. Both drawings should be changed to .375 ±.001 diameter × .230 ±.002 deep. This will provide a precision fit for the shoulder screw that mounts into this hole.''

Agency Response: To assess this aspect of the petition, the agency evaluated the load cells from both FTSS and Denton, as well as the structural replacements. FTSS load cells measure 0.375 × 0.232 deep. The Denton load cell could not be located, but as this is Denton's comment, it is assumed that the petitioner's load cells match its recommendation. Accordingly, NHTSA has determined that Denton is correct. The load cell drawing SA572–S62 is corrected so that it matches the physical load cells, specifying .375 ±.001 diameter × .230 ±.002 deep. The structural replacement drawing 180–3330 is also modified to specify .375 ±.001 diameter × .230 ±.002 deep, so that it matches the load cell.

6. Drawing SA572–S64, 6–Axis Lumbar Spine Load Cell

With respect to the 6-axis lumbar spine load cell, Denton stated that ''the side view of the load cell in the drawing shows a neutral axis .900 in from the top of the load cell. Denton has manufactured this load cell since 1995 with a neutral axis .875 in from the top face of the load cell. Either the dimension is in error or it must be noted to consult the load cell manufacturer for the correct dimension.''

Agency Response: We agree that a dimension defining the neutral axis of the load cell is not appropriate in this case as FTSS and Denton produce load cells with different neutral axes. (The neutral axis distance for the FTSS load cell is 0.900 in.)[56] Accordingly, we have removed the .900 dimension and have added a note in its place that states to

[54] See ex parte memorandum in the docket.

[55] The ES–2re allows equivalent materials, including metals, as indicated by the ''Material Ref.'' label in the title block. We believe this is due to the fact that the ES–2re is a modification of the EuroSID, which was originally developed in Europe, and the original materials were defined by European material standards. Thus, by defining a reference material, equivalent American materials could be used.

[56] *See* ex parte memorandum in docket.

consult with the load cell manufacturer for the neutral axis dimension.

d. Agency Corrections and Clarifications

In this section, the agency makes further corrections and clarifications of the drawings and PADI.

1. Drawing 180–0000 (sheet 4 of 5), SID–IIsD Complete Assembly CG Location

In the final rule drawing package, CG locations were specified as negative values for the Neck CGx, Upper Leg CGx, Lower Leg CGz, and Foot CGz. However, assembly drawings for these components illustrating the CG location do not denote positive or negative axis directions. Thus, the agency believes that CG locations are clearer if all CG locations are specified as positive values, located at the locations shown in the drawing package. Accordingly, we have changed the Neck CGx from −0.30 to 0.30, the Upper Leg CGx from −5.01 to 5.01, the Lower Leg CGz from −5.94 to 5.94, and the Foot CGz from −2.00 to 2.00. Also on this drawing, an asterisk was added after the quantity of ''Arm Assembly, Molded'' to clarify that only one arm is installed on the complete dummy. This clarification is also found in Table 26 of the PADI. Finally, in the upper torso parts table, in the note (without chest jacket),* the asterisk was moved inside the parentheses to clarify that this line refers to the upper torso assembly drawing without the chest jacket.

2. Drawing 180–1000, Head Assembly

In drawing 180–1000, items 13–17 were labeled as reference. Items 13, 14, 16 and 17 are called out on drawing 180–0000, sheet 2 of 5, and thus are referenced on this drawing. However, item 15 is not called out on another drawing, thus it should not be labeled as reference. We have thus removed ''REF'' from the description for item 15, ''Screw, SHCS 10–24 X 7/16.'' Also on this drawing, the description for item 9 was changed to agree with the part's drawing.

3. Drawing 180–2000, Neck Assembly

The description of Item #12, ''Washer, 3/8″Ø Flat,'' needed correction. This washer is placed around the threaded portion of the neck cable to prevent the lower neck bushing from damage due to tightening of the nut to the neck cable. However, this portion of the neck cable has a diameter of ½ in (thus, it is physically impossible for a ⅜ in washer to fit around it). A washer is also used on the HIII5F neck, but in the HIII5F neck assembly drawing (880105–250), the description for the same part number is ''Washer, 1.06 OD. X .53 ID. X .06 CAD Plate.'' The correct description for Item #12 on drawing 180–2000 is ''1.06 OD X .53 ID X .06 WASHER.'' Drawing 180–2000 and Table 6 of the PADI have been amended to reflect this correction.

4. Drawing 180–4000, Lower Torso Assembly; and drawing 180–3000, Upper Torso Assembly

For the purposes of CG and weight measurements, the location of the lower abdominal rib potentiometer is changed from the upper torso to the lower torso.

The final rule drawing package indicates that this potentiometer assembly is considered part of the upper torso (180–3000). During communication with FTSS regarding clarification of the petitioner's various requests,[57] we found that FTSS was including the lower abdominal rib potentiometer in the lower torso for weight and CG measurement, because the potentiometer is mounted in the lower torso. NHTSA believes it is reasonable to consider the potentiometer assembly as part of the lower torso for weight and CG measurements because, while the end of the potentiometer assembly is mounted to the lower abdominal rib (upper torso), the potentiometer housing, which is the heaviest portion of the assembly, is mounted in the lower torso. As a practical matter, this change in where the lower abdominal rib pot is located for purposes of CG and weight measurement does not change in any manner the fully assembled dummy, but it does harmonize the specification with industry practice. Thus, we are amending the drawings to show the lower abdominal rib potentiometer in the lower torso assembly as follows: we have changed the quantity of ½ inch potentiometers (item 42, 180–3881) from 6 to 5 in the upper torso assembly (180–3000 sheet 1 of 2); removed ''REF'' from ½ inch potentiometer assembly (item 21, 180–3881) in the lower torso assembly drawing (180–4000 sheet 1 of 2); added the potentiometer assembly schematic to the lower torso CG drawing (180–4000 sheet 2 of 2); and updated complete assembly drawing 180–0000, sheet 4 of 5 with new CG and weight values. Additionally, we have modified Table 7 (Upper Torso Assembly Components), Table 9 (Lower Torso Assembly Components) and Table 20 (SID–IIsD Total and Segment Masses) of the PADI to reflect these changes in the drawing package. We have also made modifications to Section 5.3.1 (instructions for removal of the upper torso), Section 5.5.1 (disassembly of the lower torso), Section 6.5.4.2 (installation of the lower abdominal displacement potentiometer), and Section 8.1 (Thoracic and Abdominal Rib Structure), and related figures to account for the 5th pot being part of the lower torso assembly.

[57] *See* ex parte memorandum in docket.

5. Drawing 180–4000, Lower Torso Assembly, Sheet 1 of 2

The description of item 18 is changed from ''HEX NUT, JAM ⅝–18'' TO ''NUT, HEX JAM ⅝–18 LOCK NUT'' to reflect the actual part. A lock nut ensures that the parts do not become loose.

6. Drawing 180–4000, Lower Torso Assembly, Sheet 2 of 2

The orientation of the CG x-axis needed clarification as it is not clear in this drawing. We have added a second note to this drawing that states, ''The X axis is parallel to the top surface of the lumbar spine load cell simulator.''

7. Drawing 180–4402, Femur Holding Shaft—Pelvis

The diameter of the shaft (0.49 +.000/−.002 in) needed correction. This shaft passes through a spherical bearing (9002608) with ID 0.5000 +.0025/−.0005 in, contained within the femur assembly (180–4423–1/–2). However, if the shaft were made to the existing final rule specification, ''slop'' between the bearing and shaft would result because of too much space between them. Physical measurements of multiple shafts indicate that it has a diameter of 0.498 in, which is 0.008 in out of specification. We have changed the femur holding shaft diameter to .498 ±.001 in to reflect currently manufactured parts and to ensure good fit between the shaft and bearing.

8. Drawing 180–9000, SID–IIsD Headform Assembly, Sheet 1 of 2

The orientation of the nodding blocks on the neck did not represent their orientation in the physical neck/headform assembly. Their orientation on the drawing is corrected to reflect the physical assembly.

9. Drawing Package Changes for Consistency of Part Names

Corrections were made to the part descriptions in the following assembly drawings to match the part names on individual drawings: Drawing 180–0000 sheet 1 of 5, Item 3; Drawing 180–3881, Item 4; Drawing 180–5000–1/2, Item 7; Drawing 180–5501, Item 2; Drawing 180–5901–2, Item 5; Drawing 180–9000, Item 10; and Drawing 180–9002, Items 3 and 7.

10. Other Changes to PADI and to Parts/Drawings List

• PADI Section 6.5.2, Installation of Rib Accelerometers: Instruction number 2 in this section, stating that accelerometer configuration for each rib is identical, is incorrect. The accelerometers mounted in thoracic ribs 1 and 2 and abdominal rib 1 are configured differently than those mounted in thoracic rib 3 and abdominal rib 2. This instruction has been corrected and a new figure added to illustrate the difference in configuration.

• PADI page 2: the website to find docket materials was changed from *http://dms.dot.gov to www.regulations.gov*

• Some PADI figures were updated to improve clarity of instructions.

• The Parts/Drawings List was updated to reflect changes made to the drawing package in this final rule.

• The part names for drawings 180–1005 and 180–3005 were changed in the PADI to agree with the part name in the drawing package.

• The Parts/Drawings List was updated to reflect changes made to the drawing package in this final rule. In addition to the changes previously discussed in this preamble, the following part descriptions in the parts/drawings list were changed for consistency with part names in the drawing package: 180–1005, 180–3005, 6000075, 180–5504, 180–5508, 180–5708, 180–5900–1/2, and 180–5905.

XII. Rulemaking Analyses and Notices

Executive Order 12866 and DOT Regulatory Policies and Procedures

Executive Order 12866, ''Regulatory Planning and Review,'' provides for making determinations whether a regulatory action is ''significant'' and therefore subject to Office of Management and Budget (OMB) review and to the requirements of the Executive Order. This rulemaking action was not considered a significant regulatory action under Executive Order 12866. This rulemaking action was also determined not to be significant under the Department of Transportation's (DOT's) regulatory policies and procedures (44 FR 11034, February 26, 1979).

NHTSA's specifications in 49 CFR part 572 for a 5th percentile adult female side impact dummy that the agency will use in research, compliance tests of the Federal side impact protection safety standards, and consumer information programs do not impose any requirements on anyone. Businesses would be affected only if they choose to manufacture or test with the dummy. The cost of an uninstrumented SID–IIsD is approximately $47,000. Instrumentation adds approximately $24,000 for minimum requirements. The total cost of a minimally-instrumented compliance dummy is approximately $71,000. The amendments made in today's document will not affect the cost of the dummy. Because the economic impacts of this final rule are minimal, no further regulatory evaluation is necessary.

Regulatory Flexibility Act

Pursuant to the Regulatory Flexibility Act (5 U.S.C. 601 *et seq.,* as amended by the Small Business Regulatory Enforcement Fairness Act (SBREFA) of 1996), whenever an agency is required to publish a proposed or final rule, it must prepare and make available for public comment a regulatory flexibility analysis that describes the effect of the rule on small entities (i.e., small businesses, small organizations, and small governmental jurisdictions), unless the head of the agency certifies the rule will not have a significant economic impact on a substantial number of small entities. The Small Business Administration's regulations at 13 CFR part 121 define a small business, in part, as a business entity ''which operates primarily within the United States.'' (13 CFR 121.105(a)).

We have considered the effects of this rulemaking under the Regulatory Flexibility Act. I hereby certify that this rulemaking action will not have a significant economic impact on a substantial number of small entities. This action will not have a significant economic impact on a substantial number of small entities because the rule does not impose or rescind any requirements for anyone. The amendments made in this document will not affect the cost of the dummy. NHTSA does not require anyone to manufacture the dummy or to test vehicles with it.

National Environmental Policy Act

NHTSA has analyzed this final rule for the purposes of the National Environmental Policy Act and determined that it will not have any significant impact on the quality of the human environment.

Executive Order 13132 (Federalism)

Executive Order 13132 requires NHTSA to develop a process to ensure ''meaningful and timely input by State and local officials in the development of regulatory policies that have federalism implications.'' ''Policies that have federalism implications'' is defined in the Executive Order to include regulations that have ''substantial direct effects on the States, on the relationship between the national government and the States, or on the distribution of power and responsibilities among the various levels of government.'' Under Executive Order 13132, the agency may not issue a regulation with Federalism implications, that imposes substantial direct compliance costs, and that is not required by statute, unless the Federal government provides the funds necessary to pay the direct compliance costs incurred by State and local governments, the agency consults with State and local governments, or the agency consults with State and local officials early in the process of developing the regulation.

NHTSA has examined today's final rule pursuant to Executive Order 13132 (64 FR 43255, August 10, 1999) and concluded that no additional consultation with States, local governments or their representatives is mandated beyond the rulemaking process. The agency has concluded that the rule does not have federalism implications because the rule does not have ''substantial direct effects on the States, on the relationship between the national government and the States, or on the distribution of power and responsibilities among the various levels of government.'' Moreover, the amendments made in this document will not affect the cost of the dummy.

Unfunded Mandates Reform Act

Section 202 of the Unfunded Mandates Reform Act of 1995 (UMRA) requires Federal agencies to prepare a written assessment of the costs, benefits and other effects of proposed or final rules that include a Federal mandate likely to result in the expenditure by State, local or tribal governments, in the aggregate, or by the private sector, of more than $100 million in any one year (adjusted for inflation with base year of 1995). Before promulgating a NHTSA rule for which a written statement is needed, section 205 of the UMRA generally requires us to identify and consider a reasonable number of regulatory alternatives and adopt the least costly, most cost-effective or least burdensome alternative that achieves the objectives of the rule. The provisions of section 205 do not apply when they are inconsistent with applicable law. Moreover, section 205 allows us to adopt an alternative other than the least costly, most cost-effective or least burdensome alternative if we publish with the final rule an

explanation why that alternative was not adopted.

This rule does not impose any unfunded mandates under the Unfunded Mandates Reform Act of 1995. This rule does not meet the definition of a Federal mandate because it does not impose requirements on anyone. Further, it will not result in costs of $100 million or more to either State, local, or tribal governments, in the aggregate, or to the private sector. The amendments made in this document will not affect the cost of the dummy. Thus, this rule is not subject to the requirements of sections 202 and 205 of the UMRA.

Civil Justice Reform

Pursuant to Executive Order 12778, ''Civil Justice Reform,'' we have considered whether this rule will have any retroactive effect. This rule does not have any retroactive effect. A petition for reconsideration or other administrative proceeding will not be a prerequisite to an action seeking judicial review of this rule. This rule does not preempt the states from adopting laws or regulations on the same subject, except that it does preempt a state regulation that is in actual conflict with the Federal regulation or makes compliance with the Federal regulation impossible or interferes with the implementation of the Federal statute.

Paperwork Reduction Act

Under the Paperwork Reduction Act of 1995, a person is not required to respond to a collection of information by a Federal agency unless the collection displays a valid control number from the Office of Management and Budget (OMB). This final rule does not have any requirements that are considered to be information collection requirements as defined by the OMB in 5 CFR part 1320.

National Technology Transfer and Advancement Act

Section 12(d) of the National Technology Transfer and Advancement Act of 1995 (NTTAA), Public Law 104–113, section 12(d) (15 U.S.C. 272) directs NHTSA to use voluntary consensus standards in its regulatory activities unless doing so would be inconsistent with applicable law or otherwise impractical. Voluntary consensus standards are technical standards (*e.g.,* materials specifications, test methods, sampling procedures, and business practices) that are developed or adopted by voluntary consensus standards bodies, such as the Society of Automotive Engineers (SAE). The NTTAA directs us to provide Congress, through OMB, explanations when we decide not to use available and applicable voluntary consensus standards.

The following voluntary consensus standards have been used in developing the SID–IIsD dummy:

- SAE Recommended Practice J211, Rev. Mar95 ''Instrumentation for Impact Tests''; and
- SAE J1733 of 1994–12 ''Sign Convention for Vehicle Crash Testing''.

Plain Language

Executive Order 12866 requires each agency to write all rules in plain language. Application of the principles of plain language includes consideration of the following questions:

—Has the agency organized the material to suit the public's needs?

—Are the requirements in the rule clearly stated?

—Does the rule contain technical language or jargon that is not clear?

—Would a different format (grouping and order of sections, use of headings, paragraphing) make the rule easier to understand?

—Would more (but shorter) sections be better?

—Could the agency improve clarity by adding tables, lists, or diagrams?

—What else could the agency do to make this rule easier to understand?

If you have any responses to these questions, please write to us about them.

Regulation Identifier Number

The Department of Transportation assigns a regulation identifier number (RIN) to each regulatory action listed in the Unified Agenda of Federal Regulations. The Regulatory Information Service Center publishes the Unified Agenda in April and October of each year. You may use the RIN contained in the heading at the beginning of this document to find this action in the Unified Agenda.

List of Subjects in 49 CFR Part 572

Incorporation by reference, Motor vehicle safety.

■ In consideration of the foregoing, NHTSA amends 49 CFR part 572 as follows:

PART 572—ANTHROPOMORPHIC TEST DEVICES

■ 1. The authority citation for part 572 continues to read as follows:

Authority: 49 U.S.C. 322, 30111, 30115, 30117 and 30166; delegation of authority at 49 CFR 1.50.

Subpart O, Hybrid III 5th Percentile Female Test Dummy, Alpha Version

■ 2. Section 572.137 is amended by revising the third sentence in paragraph (a) and the third sentence in paragraph (b), to read as follows:

§ 572.137 Test conditions and instrumentation.

(a) * * * The impactor shall have a mass of 13.97 ±0.23 kg (30.8 ±0.5 lbs) and a minimum mass moment of inertia of 3646 kg-cm^2 (3.22 lbs-in-sec^2) in yaw and pitch about the CG of the probe. * * *

(b) * * * The impactor shall have a mass of 2.99±0.23 kg (6.6±0.5 lbs) and a minimum mass moment of inertia of 209 kg-cm^2 (0.177 lb-in-sec^2) in yaw and pitch about the CG of the probe. * * *

* * * * *

Subpart V, SID–IIsD Side Impact Crash Test Dummy, Small Adult Female

■ 3. Section 572.190 is amended by revising paragraph (a)(1), the introductory text of paragraph (a)(2), paragraphs (a)(3), (b), and (c)(1), to read as follows:

§ 572.190 Incorporated materials.

(a) * * *

(1) A parts/drawing list entitled, ''Parts/Drawings List, Part 572 Subpart V, SID–IIsD, July 1, 2008,''

(2) A drawings and inspection package entitled ''Drawings and Specifications for the SID–IIsD Small Female Crash Test Dummy, Part 572 Subpart V, July 1, 2008,'' consisting of:

* * * * *

(3) A procedures manual entitled, ''Procedures for Assembly, Disassembly, and Inspection (PADI) of the SID–IIsD Side Impact Crash Test Dummy, July 1, 2008,'' incorporated by reference in § 572.191;

* * * * *

(b) The Director of the Federal Register approved the materials incorporated by reference in accordance with 5 U.S.C. 552(a) and 1 CFR part 51. Copies of the materials may be inspected at the Department of Transportation, Docket Operations, Room W12–140, 1200 New Jersey Avenue, SE., Washington, DC 20590, telephone (202) 366–9826, and at the National Archives and Records Administration (NARA), and in electronic format through Regulations.gov. For information on the availability and inspection of this material at NARA, call 202–741–6030, or go to: *http://www.archives.gov/federal_register/code_of_federal_regulations/ibr_locations.html.* For

information on the availability and inspection of this material at Regulations.gov, call 1–877–378–5457, or go to: *http://www.regulations.gov*.

(c) * * *

(1) The Parts/Drawings List, Part 572 Subpart V, SID–IIsD, July 1, 2008, referred to in paragraph (a)(1) of this section, the package entitled Drawings and Specifications for SID–IIsD Small Female Crash Test Dummy, Part 572 Subpart V, July 1, 2008, referred to in paragraph (a)(2) of this section, and the PADI document referred to in paragraph (a)(3) of this section, are available in electronic format through *www.Regulations.gov* and in paper format from Leet-Melbrook, Division of New RT, 18810 Woodfield Road, Gaithersburg, MD 20879, (301) 670–0090.

■ 4. Section 572.191 is amended by revising paragraphs (a), (b), and (c), to read as follows:

§ 572.191 General Description.

(a) The SID–IIsD Side Impact Crash Test Dummy, small adult female, is defined by:

(1) The drawings and specifications contained in the ''Drawings and Specifications for SID–IIsD Small Female Crash Test Dummy, Part 572 Subpart V, July 1, 2008,'' which includes the technical drawings and specifications described in Drawing 180–0000, the titles of which are listed in Table A;

TABLE A

Component assembly	Drawing number
6 Axis Head Assembly	180–1000
Neck Assembly	180–2000
Upper Torso Assembly	180–3000
Clamping Washer	180–3005
Lower Torso Assembly Complete	180–4000
Complete Leg Assembly, Left	180–5000–1
Complete Leg Assembly, Right	180–5000–2
Arm Assembly Left Molded	180–6000–1
Arm Assembly Right Molded	180–6000–2

(2) The ''Parts/Drawing List, Part 572 Subpart V, SID–IIsD,'' dated July 1, 2008 and containing 7 pages,

(3) A listing of available transducers-crash test sensors for the SID–IIsD Side Impact Crash Test Dummy, 5th percentile adult female, is shown in drawing 180–0000 sheet 2 of 5, dated July 1, 2008,

(4) ''Procedures for Assembly, Disassembly, and Inspection (PADI) of the SID–IIsD Side Impact Crash Test Dummy, July 1, 2008,'' and,

(5) Sign convention for signal outputs reference document SAE J1733 Information Report, titled ''Sign Convention for Vehicle Crash Testing,'' dated July 12, 1994, incorporated by reference in § 572.200(k).

(b) Exterior dimensions of the SID–IIsD Small Adult Female Side Impact Crash Test Dummy are shown in drawing 180–0000 sheet 3 of 5, dated July 1, 2008.

(c) Weights and center of gravity locations of body segments are shown in drawing 180–0000 sheet 4 of 5, dated July 1, 2008.

* * * * *

■ 5. Section 572.193 is amended by revising paragraph (c)(1) to read as follows:

§ 572.193 Neck assembly.

* * * * *

(c) * * *.

(1) The pendulum deceleration pulse is characterized in terms of decrease in velocity as obtained by integrating the pendulum acceleration output from time zero:

10.0	−2.20 to −2.80
15.0	−3.30 to −4.10
20.0	−4.40 to −5.40
25.0	−5.40 to −6.10
>25.0 < 100	−5.50 to −6.20

* * * * *

■ 6. Section 572.194 is amended by revising paragraphs (b)(7), (b)(10), and (c) adding paragraph (b)(11), to read as follows:

§ 572.194 Shoulder.

* * * * *

(b) * * *

(7) Orient the arm to point forward at 90 ±2 degrees relative to the inferior-superior orientation of the upper torso spine box incline.

* * * * *

(10) The dummy's arm-shoulder is impacted at 4.3 ± 0.1 m/s with the impactor meeting the alignment and contact point requirements of paragraph (b)(9) of this section.

(11) Allow a period of at least thirty (30) minutes between successive tests of the same shoulder assembly.

* * * * *

(c) *Performance criteria.*

(1) While the impactor is in contact with the dummy's arm, the shoulder shall compress not less than 28 mm and not more than 37 mm measured by the potentiometer specified in (a);

(2) Peak lateral acceleration of the upper spine (T1) shall not be less than 17 g and not more than 22 g;

(3) Peak impactor acceleration shall be not less than 13 g and not more than 18 g.

■ 7. Section 572.195 is amended by revising paragraph (b)(7), adding paragraphs (b)(11) and (b)(12), revising paragraphs (c)(1)(ii), (c)(2) and (c)(3), to read as follows:

§ 572.195 Thorax with arm.

* * * * *

(b) * * *

(7) Orient the arm downward to the lowest detent such that the longitudinal centerline of the arm is parallel to the inferior-superior orientation of the spine box.

* * * * *

(11) Time zero is defined as the time of contact between the impact probe and the arm.

(12) Allow a period of at least thirty (30) minutes between successive tests of the same thorax assembly.

(c) * * *

(1) * * *

(ii) Upper thorax rib not less than 25 mm and not more than 32 mm;

* * * * *

(2) Peak lateral acceleration of the upper spine (T1) shall not be less than 34 g and not more than 43 g, and the lower spine (T12) not less than 29 g and not more than 37 g;

(3) Peak impactor acceleration after 5 ms after time zero shall be not less than 30 g and not more than 36 g.

■ 8. Section 572.196 is amended by revising paragraphs (b)(3), (c)(1)(i), (c)(1)(iii), (c)(2), and (c)(3), and by adding paragraph (b)(10), to read as follows:

§ 572.196 Thorax without arm.

* * * * *

(b) * * *

(3) Align the outermost portion of the pelvis flesh of the impacted side of the seated dummy tangent to a vertical plane located within 10 mm of the side edge of the bench as shown in Figure V6–A, while the midsagittal plane of the dummy is in vertical orientation.

* * * * *

(10) Allow a period of at least thirty (30) minutes between successive tests of the same thorax assembly.

(c) * * *

(1) * * *

(i) Upper thorax rib not less than 32 mm and not more than 40 mm;

* * * * *

(iii) Lower thorax rib not less than 35 mm and not more than 43 mm;

(2) Peak acceleration of the upper spine (T1) shall not be less than 13 g and not more than 17 g and the lower spine (T12) not less than 7 g and not more than 11 g;

(3) Peak impactor acceleration shall not be less than 14 g and not more than 18 g.

■ 9. Section 572.197 is amended by revising paragraphs (b)(3), (b)(9), (c)(1), and (c)(2), and by adding paragraph (b)(10), to read as follows:

§ 572.197 Abdomen.

* * * * *

(b) * * *

(3) Align the outermost portion of the pelvis flesh of the impacted side of the seated dummy tangent to a vertical plane located within 10 mm of the side edge of the bench as shown in Figure V7–A in Appendix A to this subpart, while the midsagittal plane of the dummy is in vertical orientation.

* * * * *

(9) The dummy's abdomen is impacted at 4.3 ± 0.1 m/s.

(10) Allow a period of at least thirty (30) minutes between successive tests of the same abdomen assembly.

(c) * * *

(1) While the impact probe is in contact with the dummy's abdomen, the deflection of the upper abdominal rib shall be not less than 36 mm and not more than 47 mm, and the lower abdominal rib not less than 33 mm and not more than 44 mm.

(2) Peak acceleration of the lower spine (T12) laterally oriented accelerometer shall be not less than 9 g and not more than 14 g;

* * * * *

■ 10. Section 572.198 is amended by revising paragraph (b)(7), adding paragraphs (b)(11) and (b)(12) and by revising paragraphs (c)(2) and (c)(3), and to read as follows:

§ 572.198 Pelvis acetabulum.

* * * * *

(b) * * *

(7) Rotate the arm downward to the lowest detent such that the longitudinal centerline of the arm is parallel to the inferior-superior orientation of the spine box.

* * * * *

(11) Time zero is defined as the time of contact between the impact probe and the pelvis plug.

(12) Allow a period of at least 120 minutes between successive tests of the same pelvis assembly.

(c) * * * * *

(2) Peak lateral acceleration of the pelvis after 6 ms after time zero is not less than 34 g and not more than 42 g;

(3) Peak acetabulum force is not less than 3.60 kN and not more than 4.30 kN.

■ 11. Section 572.199 is amended by revising paragraphs (a), (b)(4) through (b)(9), by adding paragraphs (b)(10) and (b)(11), and by revising paragraphs (c)(1), (c)(2) and (c)(3), to read as follows:

§ 572.199 Pelvis iliac.

(a) The iliac is part of the lower torso assembly shown in drawing 180–4000. The iliac test is conducted by impacting the side of the lower torso of the assembled dummy (drawing 180–0000). The dummy is equipped with a laterally oriented pelvis accelerometer as specified in 49 CFR 572.200(d), and iliac wing load cell SA572–S66, mounted as shown in sheet 2 of 5 of drawing 180–0000. When subjected to the test procedure as specified in paragraph (b) of this section, the pelvis shall meet performance requirements of paragraph (c) of this section.

(b) * * * * *

(4) Orient the arm downward to the lowest detent such that the longitudinal centerline of the arm is parallel to the inferior-superior orientation of the spine box.

(5) The midsagittal plane of the dummy is vertical, and superior surface of the lower half neck assembly load cell replacement (180–3815) in the lateral direction is within ±1 degree relative to the horizontal as shown in Figure V9–A.

(6) While maintaining the dummy's position as specified in paragraphs (b)(3), (4) and (5) of this section, the top of the shoulder rib mount (180–3352) orientation in the fore-and-aft direction is within ±1.0 degree relative to horizontal as shown in Figure V9–B in Appendix A to this subpart.

(7) The pelvis impactor is specified in 49 CFR 572.200(c).

(8) The dummy is positioned with respect to the impactor such that the longitudinal centerline of the impact probe is in line with the longitudinal centerline of the iliac load cell access hole, and the 88.9 mm dimension of the probe's impact surface is aligned horizontally.

(9) The impactor is guided, if needed, so that at contact with the pelvis, the longitudinal axis of the impactor is within ±1 degree of a horizontal plane and perpendicular to the midsagittal plane of the dummy.

(10) The dummy's pelvis is impacted at the iliac location at 4.3±0.1 m/s.

(11) Allow a period of at least 120 minutes between successive tests of the same pelvis assembly.

(c) * * * * *

(1) Peak acceleration of the impactor is not less than 36 g and not more than 45 g;

(2) Peak acceleration of the pelvis is not less than 28 g and not more than 39 g;

(3) Peak iliac force is not less than 4.10 kN and not more than 5.10 kN.

12. Section 572.200 is amended by revising paragraph (j) to read as follows:

§ 572.200 Instrumentation and test conditions.

* * * * *

(j) Performance tests are conducted, unless specified otherwise, at any temperature from 20.6 to 22.2 degrees C. (69 to 72 degrees F.) and at any relative humidity from 10% to 70% after exposure of the dummy to those conditions for a period of 4 hours.

* * * * *

■ 13. Figures V4–A, V9–A and V9–B in ''Appendix A to Subpart V of Part 572–Figures'' are revised to read as follows:

Appendix A to Subpart V of Part 572—Figures

* * * * *

BILLING CODE 4910–59–P

FIGURE V4-A
SHOULDER IMPACT

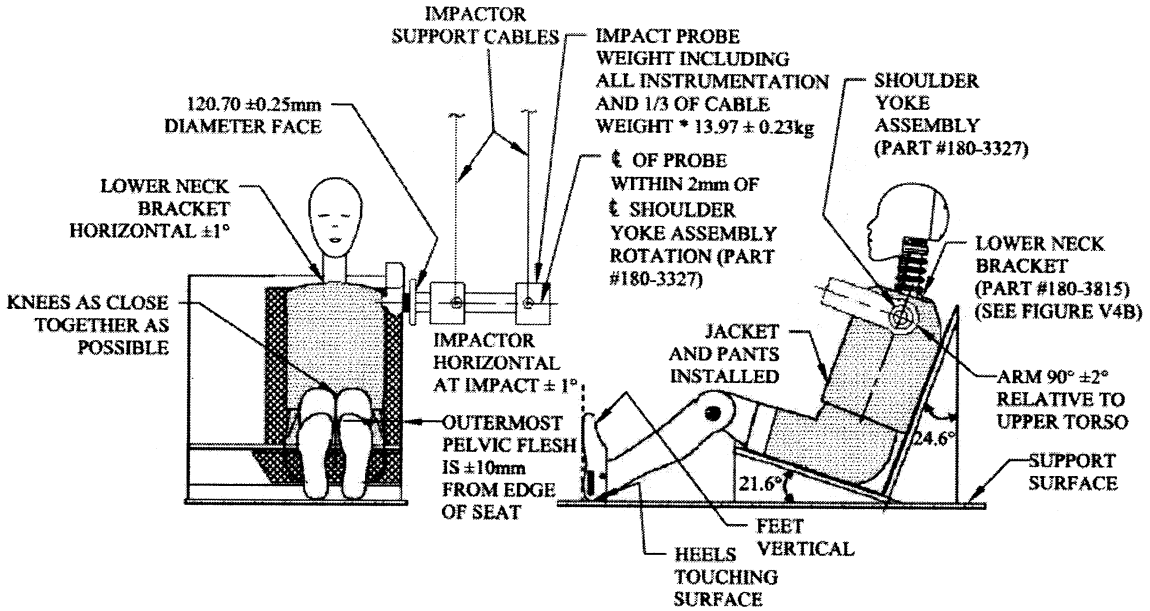

* 1/3 OF CABLE WEIGHT NOT TO EXCEED 5% OF THE TOTAL IMPACTOR PROBE WEIGHT

* * * * *

FIGURE V9-A
ILIAC IMPACT

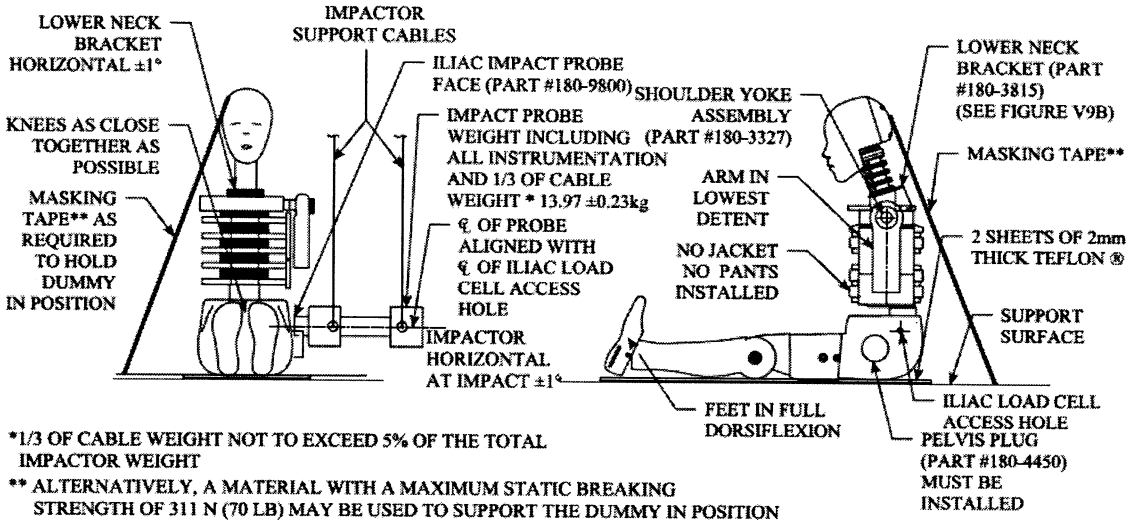

*1/3 OF CABLE WEIGHT NOT TO EXCEED 5% OF THE TOTAL IMPACTOR WEIGHT

** ALTERNATIVELY, A MATERIAL WITH A MAXIMUM STATIC BREAKING STRENGTH OF 311 N (70 LB) MAY BE USED TO SUPPORT THE DUMMY IN POSITION

FIGURE V9-B
ILIAC IMPACT
(NON-IMPACT SIDE VIEW)

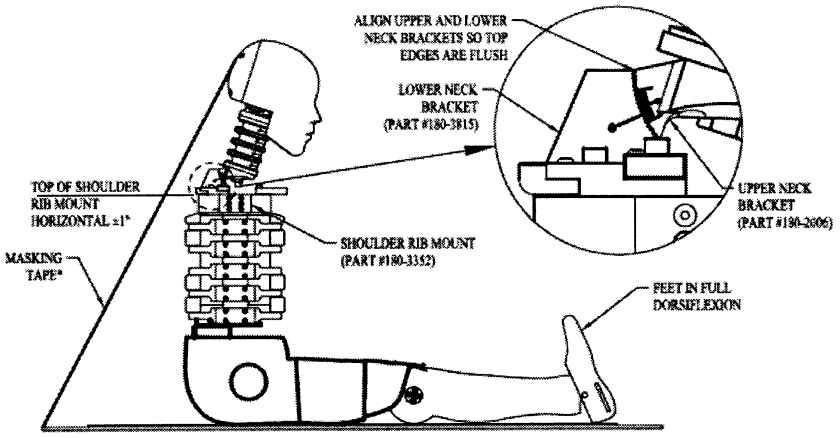

* ALTERNATIVELY, A MATERIAL WITH A MAXIMUM STATIC BREAKING STRENGTH OF 311 N (70 LB) MAY BE USED TO SUPPORT THE DUMMY IN POSITION

Issued: June 5, 2009.

Ronald L. Medford,

Acting Deputy Administrator.

[FR Doc. E9–13605 Filed 6–22–09; 8:45 am]

BILLING CODE 4910–59–C